The Radio Amateur's Handbook

The Standard Manual of Amateur Radio Communication

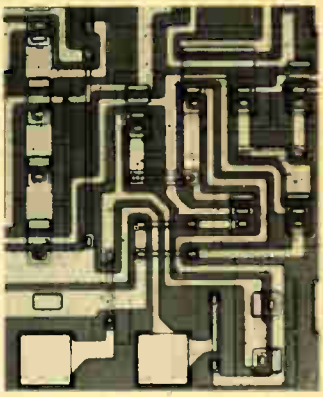

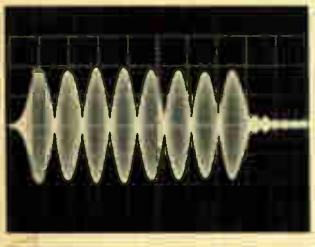

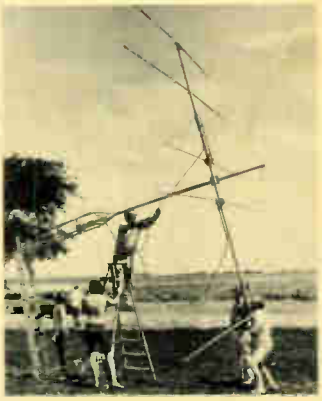

$4.50 in the U.S.A.

1972

PUBLISHED BY THE AMERICAN RADIO RELAY LEAGUE

The Radio Amateur's Handbook

By the HEADQUARTERS STAFF

of the

AMERICAN RADIO RELAY LEAGUE

NEWINGTON, CONN., U.S.A. 06111

Editor:
Douglas Blakeslee, W1KLK

Assistant Editors:
Edward Tilton, W1HDQ – Vhf/Uhf
Lewis McCoy, W1ICP – Antennas/Workshop
Doug DeMaw, W1CER – Semiconductors/ Measurements
Gerald Hall, K1PLP – Specialized Techniques
Robert Myers, W1FBY – Portable/Mobile
Perry Williams, W1UED – Historical/Regulations
George Hart, W1NJM – Operating/Awards

1972

Forty-Ninth Edition

Library of Congress Catalog Card Number: 41-3345
Forty-ninth Edition

$4.50 in the U.S.A. and Possessions, $5.00 in Canada, $6.00 elsewhere.
Clothbound edition $7.50 U.S.A., Possessions and Canada, $8.00 elsewhere.

FOREWORD

Not long ago *TIME*, in its book section, published a list of "all time best sellers." It was in two parts – fiction and non-fiction.

Heading the non-fiction list, of course, was the *Bible*, followed by such classics as Dr. Spock's *Baby and Child Care*. The only technical publication on that list was *The Radio Amateur's Handbook* which, since F. E. Handy's (W1BDI) modest first edition in 1926, has passed the four million mark. All in all, this is a rather remarkable record for what is ostensibly a specialized hobby manual.

The *Handbook* is, of course, much more than that. Not only has it won an international reputation as *the* basic, indispensable reference work for the radio amateur, but it has long been accepted as a highly useful adjunct to many industrial and academic libraries in the field of electronics. The *Handbook* has become the unique institution it is because, first, its objective has always been to present radio theory and practice in terms of application . . . how to do it . . . rather than abstract principles. Second, it has been continuously changed and modified to reflect both the fundamentals and the rapidly-advancing technology of radio communications in the soundest way possible. In other words, our concern is not with what is merely new or novel or intriguing, but with what is practical, meaningful, proved – and, above all, *useful.*

The *Handbook* is the product of the efforts, the talents and the skills of many people, bringing together the fruits of home workshops and the expertise of the entire Hq. staff. Typical of the functioning of a truly mutual-benefit society, it is a cornerstone in the ARRL structure to fulfill FCC goals for amateurs (e.g., "ability to contribute to the advance of the radio art") and those in our own charter (e.g., "the fostering of education in the field of electronic communications.").

It is our hope that you will find this edition of the *Handbook* worthy in every respect of its distinguished predecessors; even more important, that you will find in it both inspiration and help in achieving your goals as a radio amateur – because that is what it is all about. Your comments, suggestions and constructive criticism are always welcome.

JOHN HUNTOON, W1RW
General Manager

Newington, Conn.
January, 1972

SCHEMATIC SYMBOLS USED IN CIRCUIT DIAGRAMS

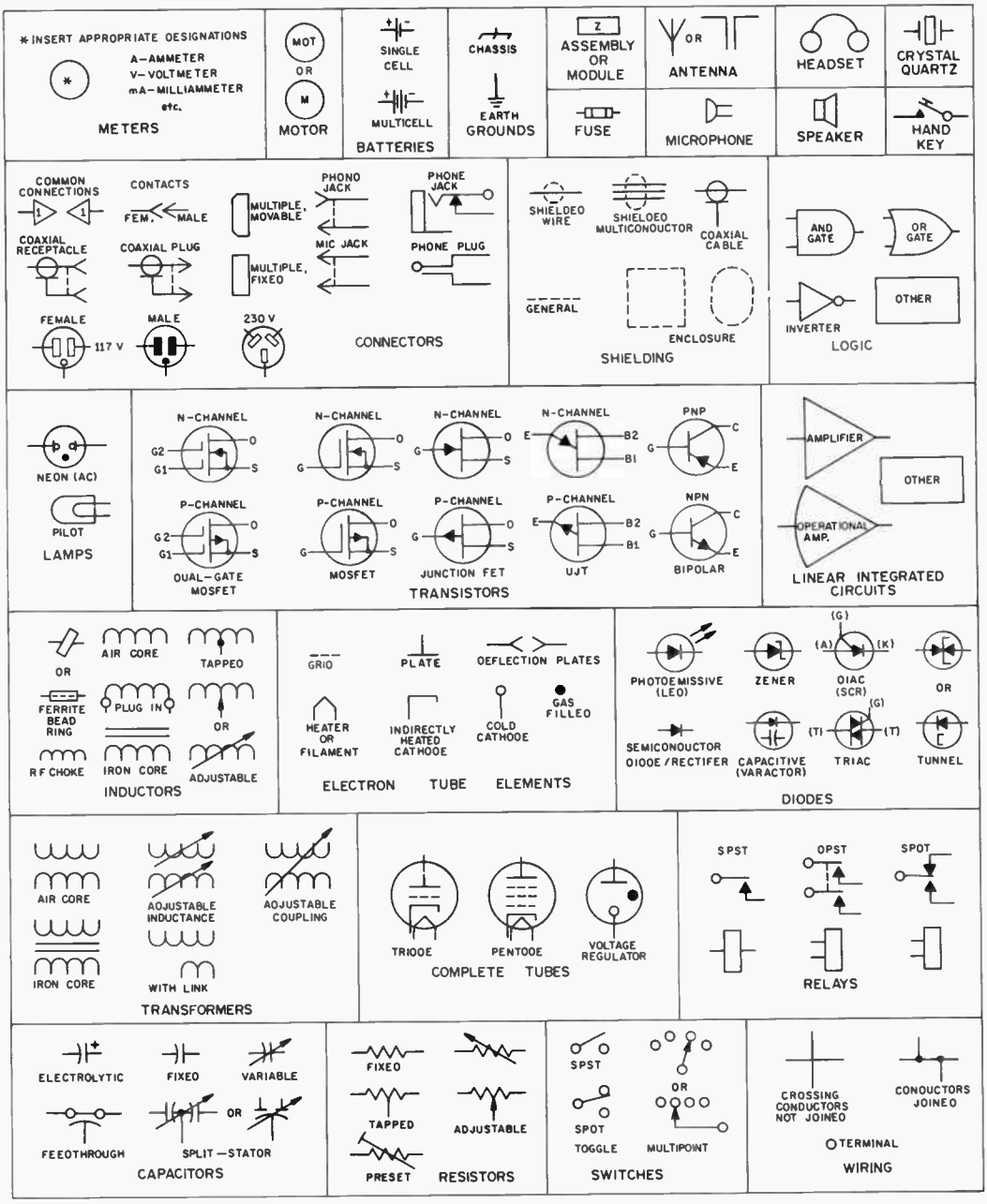

CONTENTS

The Amateur's Code

ONE

The Amateur is Gentlemanly . . . He never knowingly uses the air for his own amusement in such a way as to lessen the pleasure of others. He abides by the pledges given by the ARRL in his behalf to the public and the Government.

TWO

The Amateur is Loyal . . . He owes his amateur radio to the American Radio Relay League, and he offers it his unswerving loyalty.

THREE

The Amateur is Progressive . . . He keeps his station abreast of science. It is built well and efficiently. His operating practice is clean and regular.

FOUR

The Amateur is Friendly . . . Slow and patient sending when requested, friendly advice and counsel to the beginner, kindly assistance and cooperation for the broadcast listener; these are marks of the amateur spirit.

FIVE

The Amateur is Balanced . . . Radio is his hobby. He never allows it to interfere with any of the duties he owes to his home, his job, his school, or his community.

SIX

The Amateur is Patriotic . . . His knowledge and his station are always ready for the service of his country and his community.

—Paul M. Segal

Amateur Radio

Amateur radio is a scientific hobby, a means of gaining personal skill in the fascinating art of electronics and an opportunity to communicate with fellow citizens by private short-wave radio. Scattered over the globe are over 500,000 amateur radio operators who perform a service defined in international law as one of "self-training, intercommunication and technical investigations carried on by . . . duly authorized persons interested in radio technique solely with a personal aim and without pecuniary interest."

From a humble beginning at the turn of the century, amateur radio has grown to become an established institution. Today the American followers of amateur radio number over 250,000, trained communicators from whose ranks will come the professional communications specialists and executives of tomorrow – just as many of today's radio leaders were first attracted to radio by their early interest in amateur radio communication. A powerful and prosperous organization now provides a bond between amateurs and protects their interests; an internationally respected magazine is published solely for their benefit. The military services seek the cooperation of the amateur in developing communications reserves. Amateur radio supports a manufacturing industry which, by the very demands of amateurs for the latest and best equipment, is always up-to-date in its designs and production techniques – in itself a national asset. Amateurs have won the gratitude of the nation for their heroic performances in times of natural disaster; traditional amateur skills in emergency communication are also the stand-by system for the nation's civil defense. Amateur radio is, indeed, a magnificently useful institution.

Although as old as the art of radio itself, amateur radio did not always enjoy such prestige. Its first enthusiasts were private citizens of an experimental turn of mind whose imaginations went wild when Marconi first proved that messages actually could be sent by wireless. They set about learning enough about the new scientific marvel to build homemade spark transmitters. By 1912 there were numerous Government and commercial stations, and hundreds of amateurs; regulation was needed, so laws, licenses and wavelength specifications appeared. There was then no amateur organization nor spokesman. The official viewpoint toward amateurs was something like this:

"Amateurs? . . . Oh, yes . . . Well, stick 'em on 200 meters and below; they'll never get out of their backyards with that."

But as the years rolled on, amateurs found out how, and DX (distance) jumped from local to 500-mile and even occasional 1000-mile two-way contacts. Because all long-distance messages had to be relayed, relaying developed into a fine art – an ability that was to prove invaluable when the Government suddenly called hundreds of skilled amateurs into war service in 1917. Meanwhile U.S. amateurs began to wonder if there were amateurs in other countries across the seas and if, some day, we might not span the Atlantic on 200 meters.

Most important of all, this period witnessed the birth of the American Radio Relay League, the amateur radio organization whose name was to be virtually synonymous with subsequent amateur progress and short-wave development. Conceived and formed by the famous inventor, the late Hiram Percy Maxim, ARRL was formally launched in early 1914. It had just begun to exert its full force in amateur activities when the United States declared war in 1917, and by that act sounded the knell for amateur radio for the next two and a half years. There were then over 6000 amateurs. Over 4000 of them served in the armed forces during that war.

Today, few amateurs realize that World War I not only marked the close of the first phase of amateur development but came very near marking its end for all time. The fate of amateur radio was in the balance in the days immediately following the signing of the Armistice. The Government, having had a taste of supreme authority over communications in wartime, was more than half inclined to keep it. The war had not been ended a month before Congress was considering legislation that would have made it impossible for the

HIRAM PERCY MAXIM
President ARRL, 1914–1936

amateur radio of old ever to be resumed. ARRL's President Maxim rushed to Washington, pleaded, argued, and the bill was defeated. But there was still no amateur radio; the war ban continued. Repeated representations to Washington met only with silence. The League's offices had been closed for a year and a half, its records stored away. Most of the former amateurs had gone into service; many of them would never come back. Would those returning be interested in such things as amateur radio? Mr. Maxim, determined to find out, called a meeting of the old Board of Directors. The situation was discouraging: amateur radio still banned by law, former members scattered, no organization, no membership, no funds. But those few determined men financed the publication of a notice to all the former amateurs that could be located, hired Kenneth B. Warner as the League's first paid secretary, floated a bond issue among old League members to obtain money for immediate running expenses, bought the magazine *QST* to be the League's official organ, started activities, and dunned officialdom until the wartime ban was lifted and amateur radio resumed again, on October 1, 1919. There was a headlong rush by amateurs to get back on the air. Gangway for King Spark! Manufacturers were hard put to supply radio apparatus fast enough. Each night saw additional dozens of stations crashing out over the air. Interference? It was bedlam!

But it was an era of progress. Wartime needs had stimulated technical development. Vacuum tubes were being used both for receiving and transmitting. Amateurs immediately adapted the new gear to 200-meter work. Ranges promptly increased and it became possible to bridge the continent with but one intermediate relay.

TRANSATLANTICS

As DX became 1000, then 1500 and then 2000 miles, amateurs began to dream of transatlantic work. Could they get across? In December, 1921, ARRL sent abroad an expert amateur, Paul F. Godley, 2ZE, with the best receiving equipment available. Tests were run, and *thirty* American stations were heard in Europe. In 1922 another transatlantic test was carried out and 315 American calls were logged by European amateurs and one French and two British stations were heard on this side.

Everything now was centered on one objective: two-way amateur communication across the Atlantic! It must be possible – but somehow it couldn't quite be done. More power? Many already were using the legal maximum. Better receivers? They had superheterodynes. Another wavelength? What about those undisturbed wavelengths *below* 200 meters? The engineering world thought they were worthless – but they had said that about 200 meters. So, in 1922, tests between Hartford and Boston were made on 130 meters with encouraging results. Early in 1923, ARRL-sponsored tests on wavelengths down to 90 meters were successful. Reports indicated that *as the wavelength dropped the results were better.* Excitement began to spread through amateur ranks.

Finally, in November, 1923, after some months of careful preparation, two-way amateur transatlantic communication was accomplished, when Fred Schnell, 1MO (now W4CF) and the late John Reinartz, 1XAM (later K6BJ) worked for several hours with Deloy, 8AB, in France, with all three stations on 110 meters! Additional stations dropped down to 100 meters and found that they, too, could easily work two-way across the Atlantic. The exodus from the 200-meter region had started. The "short-wave" era had begun!

By 1924 dozens of commercial companies had rushed stations into the 100-meter region. Chaos threatened, until the first of a series of national and international radio conferences partitioned off various bands of frequencies for the different services. Although thought still centered around 100 meters, League officials at the first of these frequency-determining conferences, in 1924, wisely obtained amateur bands not only at 80 meters but at 40, 20, and even 5 meters.

Eighty meters proved so successful that "forty" was given a try, and QSOs with Australia, New Zealand and South Africa soon became commonplace. Then how about 20 meters? This new band revealed entirely unexpected possibilities when 1XAM worked 6TS on the West Coast, direct, at high noon. The dream of amateur radio – daylight DX! – was finally true.

PUBLIC SERVICE

Amateur radio is a grand and glorious hobby but this fact alone would hardly merit such wholehearted support as is given it by our Government at international conferences. There are other reasons. One of these is a thorough appreciation by the military and civil defense authorities of the value of the amateur as a source of skilled radio personnel in time of war. Another asset is best described as "public service."

About 4000 amateurs had contributed their skill and ability in '17-'18. After the war it was only natural that cordial relations should prevail between the Army and Navy and the amateur. These relations strengthened in the next few years and, in gradual steps, grew into cooperative activities which resulted, in 1925, in the establishment of the Naval Communications Reserve and the Army-Amateur Radio System (now the Military

A view of the ARRL laboratory.

Affiliate Radio System). In World War II thousands of amateurs in the Naval Reserve were called to active duty, where they served with distinction, while many other thousands served in the Army, Air Forces, Coast Guard and Marine Corps. Altogether, more than 25,000 radio amateurs served in the armed forces of the United States. Other thousands were engaged in vital civilian electronic research, development and manufacturing. They also organized and manned the War Emergency Radio Service, the communications section of OCD.

The "public-service" record of the amateur is a brilliant tribute to his work. These activities can be roughly divided into two classes, expeditions and emergencies. Amateur cooperation with expeditions began in 1923 when a League member, Don Mix, 1TS, of Bristol, Conn. (from 1933 to 1968 a member of the *QST* technical staff), accompanied MacMillan to the Arctic on the schooner *Bowdoin* with an amateur station. Amateurs in Canada and the U.S. provided the home contacts. The success of this venture was so outstanding that other explorers followed suit. During subsequent years a total of perhaps two hundred voyages and expeditions were assisted by amateur radio, the several explorations of the Antarctic being perhaps the best known.

Since 1913 amateur radio has been the principal, and in many cases the only, means of outside communication in several hundred storm, flood and earthquake emergencies in this country. The earthquakes which hit Alaska in 1964, Peru in 1970 and California in 1971, Hurricane Camille and Hurricane Celia, hitting the Gulf of Mexico and the Southeast U.S. in 1969 and 1970, respectively, called for the amateur's greatest emergency effort. In these disasters and many others – tornadoes, sleet storms, forest fires, blizzards – amateurs played a major role in the relief work and earned wide commendation for their resourcefulness in effecting communication where all other means had failed. The League's Emergency Corps, now a part of the Amateur Radio Public Service Corps (ARPSC), was formalized in 1938, and a program of close cooperation with the American Red Cross was adopted. Since 1947, there has been a staff member at headquarters whose primary job is coordination of public service activities.

After World War II, it became evident that the international situation was destined to be tense and the need for some civil defense measures was apparent. In the discussions with government agencies that followed, the League got two points across: first, that amateur radio had a potential for and capability of playing a major role in this program; and second, that our participation should, this time as never before, be in our own name, as an *amateur radio service*, even if and after war should break out. These principles were included into the planning by the formulation of regulations creating a new branch of the amateur service, the Radio Amateur Civil Emergency Services, RACES. As an *amateur* service, its frequency segments are shared with the regular amateur service during peacetime. In the event of war, it is planned that regular (i.e., casual) amateur radio will cease and RACES will continue to operate under certain restrictions. In peacetime emergencies (such as natural disasters), RACES will operate closely with ARPSC.

TECHNICAL DEVELOPMENTS

The amateur is constantly in the forefront of technical progress. His incessant curiosity, his eagerness to try anything new, are two reasons. Another is that ever-growing amateur radio continually overcrowds its frequency assignments, spurring amateurs to the development and adoption of new techniques to permit the accommodation of more stations.

During World War II, thousands of skilled amateurs contributed their knowledge to the development of secret radio devices, both in Government and private laboratories. Equally as important, the prewar technical progress by amateurs provided the keystone for the development of modern military communications equipment.

From this work, amateurs have moved on to satellites of their own, launched piggyback on regular space shots at no cost to the taxpayer. Project Oscar Inc., an ARRL affiliate, designed and constructed the first two non-government satellites ever placed in orbit, Oscar I on December 12, 1961, and Oscar II on June 2, 1962. Oscar III and IV received and retransmitted signals; launch dates were March 9 and December 21, 1965, respectively. Australis-Oscar V, built in Australia and launched by NASA under Radio Amateur Satellite Corporation (AMSAT) auspices, was orbited on January 23, 1970, and carried a beacon on 28 MHz which was turned on and off from the ground, as well as a beacon continuously transmitting on 144 MHZ. The name Oscar is taken from the initials of the phrase, "Orbital Satellite Carrying Amateur Radio."

Another space-age field in which amateurs are currently working is that of long-range communication using the moon as a passive reflector. The amateur bands from 144 to 2450 MHz are being used for this work. Moonbounce communications have been carried out, for instance, between Finland and California on 144 MHz and between Massachusetts and Hawaii on both 432 and 1296 MHz.

THE AMERICAN RADIO RELAY LEAGUE

The ARRL is today not only the spokesman for amateur radio in the U.S. and Canada but it is the largest amateur organization in the world. It is strictly of, by and for amateurs, is noncommercial and has no stockholders. The members of the League are the owners of the ARRL and *QST*.

The League is pledged to promote interest in two-way amateur communication and experimentation. It is interested in the relaying of messages by amateur radio. It is concerned with the advancement of the radio art. It stands for the maintenance of fraternalism and a high standard of

conduct. It represents the amateur in legislative matters.

One of the League's principal purposes is to keep amateur activities so well conducted that the amateur will continue to justify his existence. Amateur radio offers its followers countless pleasures and unending satisfaction. It also calls for the shouldering of responsibilities – the maintenance of high standards, a cooperative loyalty to the traditions of amateur radio, a dedication to its ideals and principles, so that the institution of amateur radio may continue to operate "in the public interest, convenience and necessity."

The operating territory of ARRL is divided into one Canadian and fifteen U.S. divisions. The affairs of the League are managed by a Board of Directors. One director is elected every two years by the membership of each U.S. division, and one by the Canadian membership. These directors then choose the president and three vice-presidents, who are also members of the Board. The secretary and treasurer are also appointed by the Board. The directors, as representatives of the amateurs in their divisions, meet annually to examine current amateur problems and formulate ARRL policies thereon. The directors appoint a general manager to supervise the operations of the League and its headquarters, and to carry out the policies and instructions of the Board.

ARRL owns and publishes the monthly magazine, *QST*. Acting as a bulletin of the League's organized activities, *QST* also serves as a medium for the exchange of ideas and fosters amateur spirit. Its technical articles are renowned. It has grown to be the "amateur's bible," as well as one of the foremost radio magazines in the world. Membership dues include a subscription to *QST*.

ARRL maintains a model headquarters amateur station, known as the Hiram Percy Maxim Memorial Station, in Newington, Conn. Its call is W1AW, the call held by Mr. Maxim until his death and later transferred to the League station by a special government action. Separate transmitters of maximum legal power on each amateur band have permitted the station to be heard regularly all over the world. More important, W1AW transmits on regular schedules bulletins of general interest to amateurs, conducts code practice as a training feature, and engages in two-way work on all popular bands with as many amateurs as time permits.

At the headquarters of the League in Newington, Conn., is a well-equipped laboratory to assist staff members in preparation of technical material for *QST* and the *Radio Amateur's Handbook*. Among its other activities, the League maintains a Communications Department concerned with the operating activities of League members. A large field organization is headed by a Section Communications Manager in each of the League's seventy-four sections. There are appointments for qualified members in various fields, as outlined in Chapter 24. Special activities and contests promote operating skill. A special place is reserved each month in *QST* for amateur news from every section.

AMATEUR LICENSING IN THE UNITED STATES

Pursuant to the law, the Federal Communications Commission (FCC) has issued detailed regulations for the amateur service.

A radio amateur is a duly authorized person interested in radio technique solely with a personal aim and without pecuniary interest. Amateur operator licenses are given to U.S. citizens and nationals who pass an examination on operation, apparatus, and regulations affecting amateurs, and who demonstrate ability to send and receive code. There are five available classes of amateur license – Novice, Technician, General ("Conditional" if taken by mail), Advanced, and Amateur Extra Class. Each has different requirements, the first two being the simplest and consequently conveying limited privileges as to frequencies available. Extra Class licensees have exclusive use of the frequencies 3.5-3.525, 3.8-3.825, 7.0-7.025, 14.0-14.025, 21.0-21.025 and 21.25-21.275 MHz. Advanced and Extra have exclusive use of the frequencies 3.825-3.9, 7.2-7.25, 14.2-14.275, 21.275-21.35 and 50.0-50.1 MHz. Exams for Novice, Technician and Conditional classes are taken by mail under the supervision of a volunteer examiner. Station licenses are granted only to licensed operators. An amateur station may not be used for material compensation of any sort nor for broadcasting. Narrow bands of frequencies are allocated exclusively for use by amateur stations. Transmissions may be on any frequency within the assigned bands. All the frequencies may be used for cw telegraphy; some are available for radiotelephone, others for special forms of transmission such as teletype, facsimile, amateur television or radio control. The input to the final stage of amateur stations is limited to 1000 watts (with lower limits in some cases; see the table on page 14) and on frequencies below 144 MHz must be adequately filtered direct current. Emissions must be free from spurious radiations. The licensee must provide for measurement of the transmitter frequency and establish a procedure for checking it regularly. A complete log of station operation must be maintained, with specified data. The station license also authorizes the holder to operate portable and mobile stations subject to further regulations. All radio licensees are subject to penalties for violation of regulations.

In the U.S., amateur licenses are issued only to citizens, without regard to age or physical condition. A fee of $9.00 (payable to the Federal Communications Commission) must accompany applications for new and renewed licenses (except Novices: no fee). The fee for license modification is $4.00. When you are able to copy code at the required speed, have studied basic transmitter theory and are familiar with the law and amateur regulations, you are ready to give serious thought to securing the Government amateur licenses which are issued you, after examination by an FCC engineer (or by a volunteer, depending on the license class), through the FCC Licensing Unit, Gettysburg, Pa., 17325. A complete up-to-the-minute discussion of license requirements, the FCC

regulations for the amateur service, and study guides for those preparing for the examinations, are to be found in *The Radio Amateur's License Manual*, available from the American Radio Relay League, Newington, Conn. 06111, for $1.00, postpaid.

AMATEUR LICENSING IN CANADA

The agency responsible for amateur radio in Canada is the Department of Communications, with its principal offices in Ottawa. Prospective amateurs, who must be at least 15 years old, may take the examination for an Amateur Radio Operator Certificate at one of the regional offices of the DOC. The test is in three parts: a Morse code test at ten words per minute, a written technical exam and an oral examination. Upon passing the examination, the amateur may apply for a station license, the fee for which is $10 per year. At this point, the amateur is permitted to use cw on all authorized amateur bands (see table on page 13) and phone on those bands above 50 MHz.

After six months, during which the station has been operated on cw on frequencies below 29.7 MHz, the Canadian amateur may have his certificate endorsed for phone operation on the 26.96-27.0 MHz and 28.0-29.7 MHz bands. The amateur may take a 15 wpm code test and more-difficult oral and written examinations, for the Advanced Amateur Radio Operator Certificate, which permits phone operations on portions of all authorized amateur bands. Holders of First or Second Class or Special Radio Operator's Certificates may enjoy the privileges of Advanced class without further examination. The maximum input power to the final stage of an amateur transmitter is limited to 1,000 watts.

Prospective amateurs living in remote areas may obtain a provisional station license after signing a statement that they can meet the technical and operating requirements. A provisional license is valid for a maximum of twelve consecutive months only; by then, a provisional licensee should have taken the regular examination.

Licenses are available to citizens of Canada, to citizens of other countries in the British Commonwealth, and to non-citizens who qualify as "landed immigrants" within the meaning of Canadian immigration law. The latter status may be enjoyed for only six years, incidentally. A U.S. citizen who obtained a Canadian license as a "landed immigrant" would have to become a Canadian citizen at the end of six years or lose his Canadian license.

Copies of the Radio Act and of the General Radio Regulations may be obtained for a nominal fee from the Queen's Printer, Ottawa, and its dealers. An extract of the amateur rules, Form AR-5-80, is available at DOC offices. Other books include: *The Canadian Amateur Radio Regulations Handbook*, $2.55 from CARF, Box 334, Toronto, 550, Ontario; the *Ham Handbook for Beginners* and the *Ham Handbook for Advanced*, each $4.30 from Amateur Radio Sales Co., Box 61, Station O, Toronto 16, Canada; *Radio Amateur Licensing Handbook*, $5.00, Mitchell Press Ltd., Box 6000, Vancouver 3, B.C.

RECIPROCAL OPERATING

U.S. amateurs may operate their amateur stations while visiting in Argentina, Australia, Austria, Barbados, Belgium, Bolivia, Brazil, Canada, Chile, Colombia, Costa Rica, Dominican Republic, Ecuador, El Salvador, Finland, France*, Germany, Guatemala, Guyana, Honduras, India, Indonesia, Ireland, Israel, Jamaica, Kuwait, Luxembourg, Monaco, Netherlands,* New Zealand, Nicaragua, Norway, Panama, Paraguay, Peru, Portugal, Sierre Leone, Sweden, Switzerland, Trinidad & Tobago, the United Kingdom* and Venezuela and vice versa. For the latest information, write to ARRL headquarters.

LEARNING THE CODE

In starting to learn the code, you should consider it simply another means of conveying information. The spoken word is one method, the printed page another, and typewriting and shorthand are additional examples. Learning the code is as easy – or as difficult – as learning to type.

The important thing in beginning to study code is to think of it as a language of *sound*, never as combinations of dots and dashes. It is easy to "speak" code equivalents by using "dit" and "*dah*," so that A would be "di*dah*" (the "t" is dropped in such combinations). The sound "di" should be staccato; a code character such as "5" should sound like a machinegun burst: dididididit! Stress each "*dah*" equally; they are underlined or italicized in this text because they should be slightly accented and drawn out.

Take a few characters at a time. Learn them thoroughly in di*dah* language before going on to new ones. If someone who is familiar with code can be found to "send" to you, either by whistling or by means of a buzzer or code oscillator, enlist his cooperation. Learn the code by *listening* to it. Don't think about speed to start; the first requirement is to learn the characters to the point where you can recognize each of them without hesitation. Concentrate on any difficult letters. Learning the code is not at all hard; a simple booklet treating the subject in detail is another of the beginner publications available from the League, and is entitled, *Learning the Radiotelegraph Code*, 50 cents, postpaid.

Code-practice transmissions are sent by W1AW every evening at 0030 and 0230 GMT (0130 and 2330 May through October). Code is also sent, Monday-Friday, at 1400 GMT (1300 GMT, May through October). See Chapter 24, "Code Proficiency."

A Code-Practice Set

The simple circuit shown in Fig. 1-2 is easy to build and is not costly. The entire unit, including home-made key, can be built for less than $5.00. The tone from the speaker is loud enough to provide room volume, making the oscillator useful for group code-practice sessions.

*** Includes overseas entities.**

A	didah	N	dahit
B	dahdididit	O	dahdahdah
C	dahdidahdit	P	didahdahdit
D	dahdidit	Q	dahdahdidah
E	dit	R	didahdit
F	dididahdit	S	dididit
G	dahdahdit	T	dah
H	dididididit	U	dididah
I	didit	V	dididididah
J	didahdahdah	W	didahdah
K	dahdidah	X	dahdididah
L	didahdidit	Y	dahdidahdah
M	dahdah	Z	dahdahdidit
1	didahdahdahdah	6	dahdididididit
2	dididahdahdah	7	dahdahdididit
3	dididididahdah	8	dahdahdahdidit
4	dididididah	9	dahdahdahdahdit
5	dididididit	0	dahdahdahdahdah

Period: didahdidahdidah. Comma: dahdahdidi-dahdah. Question mark: dididahdahdidit. Error: dididididididit. Double dash: dahdidididah. Colon: dahdahdahdididit. Semicolon: dahdidah-didahdit. Parenthesis: dahdidahdahdidah. Fraction bar: dahdididahdit. Wait: didahdididit. End of message: didahdidahdit. Invitation to transmit: dahdidah. End of work: didididahdidah.

Fig. 1-1 — The Continental (International Morse) code.

The circuit can be built on a 2-1/2 X 2-1/2-inch piece of circuit board, Formica, linoleum tile, or Masonite as shown in Fig. 1-2. The main chassis can be a home-made aluminum, brass, or galvanized-iron channel which is 6 inches long, 2-3/4 inches wide, and 1 inch high. The tiny 2-inch diameter speaker shown here was removed from a junk 6-transistor pocket radio. Any small speaker whose voice-coil impedance is between 3.2 and 10 ohms will work satisfactorily. Although a battery holder is used at *BT*1, the battery could be taped to the chassis, or used outboard, reducing the total cost. The circuit connections are made with short lengths of insulated hookup wire. A phono jack is used at J1, but isn't necessary. A few more cents could be saved by wiring the key directly into the circuit.

The Key

A home-made key is shown in the photo. The base is a piece of plywood which is 3/4 inch thick, 6 inches long, and is 4 inches wide. The key lever is a piece of 3/8-inch wide brass strip, No. 16 gauge. It is 5 inches long and is bent slightly near the center to raise the operating end approximately 1/4 inch above the base board. A piece of circuit board is glued to the operating end of the lever, serving as a finger plate for the key. A poker chip or large garment button can be used in place of the item shown. Epoxy glue holds the chip firmly in place.

View of the code-practice set. The speaker mounts under the chassis and is protected by a piece of aluminum screening. Ordinary window screen will work here. The circuit board is mounted over a cut-out area in the chassis. Allow a 1/4-inch overlap on all sides of the circuit board for mounting purposes. Four 4-40 bolts hold the board in place. The battery holder is a Keystone No. 175.

The brass lever is attached to the base board by means of two 6-32 bolts, each one inch in length. One of the keying leads (the one going to the chassis *ground* terminal) connects to one of the bolts, under the board. Another 6-32 X 1-inch screw is placed under the finger end of the lever (about 1/4 inch in from the end of the lever) and serves as the contact element when the key is depressed. The remaining key lead connects to this screw, again under the base board. The spacing between the lever and the contact element can be adjusted by bending the brass lever with a pair of pliers. It should be set to suit the operator. Commercially-made keys can be used if the operator prefers. There are many bargain-priced units of this type on the market.

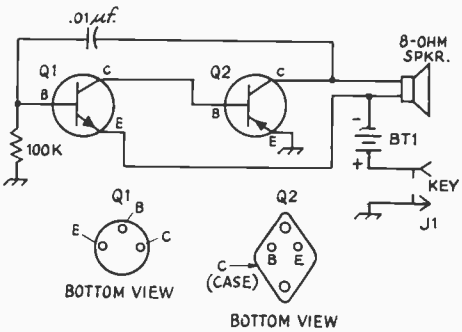

FIG. 1-2 — Schematic diagram of the code oscillator. Resistance is in ohms. K = 1000. The 0.01-uf. capacitor is disk ceramic. BT1 is a 1.5-volt size-D flashlight cell. J1 is a phono connector. Q1 is an RCA 40309 (a 2N2102 is suitable also). Q2 is an RCA 2N2869/2N301. (An RCA 40022 is suitable, also). The cases of Q1 and Q2 should be insulated from the chassis.

INTRODUCTION TO RADIO THEORY

As you start your studies for an amateur license, you may wish to have the additional help available in *How to Become a Radio Amateur* ($1.00). It features an elementary description of radio theory and constructional details on a simple receiver and transmitter.

Another aid is *A Course in Radio Fundamentals* ($1.00), a study guide using this *Handbook* as its text. There are experiments, discussions, and quizzes to help you learn radio fundamentals.

A League publication, *Understanding Amateur Radio*, explains radio theory and practice in greater detail than is found in *How to Become a Radio Amateur*, but is at a more basic level than this *Handbook*. *Understanding Amateur Radio* contains 320 pages, and is priced at $2.50.

These booklets are available postpaid from ARRL, Newington, Connecticut 06111.

THE AMATEUR BANDS

Amateurs are assigned bands of frequencies at approximate harmonic intervals throughout the spectrum. Like assignments to all services, they are subject to modification to fit the changing picture of world communications needs. Modifications of rules to provide for domestic needs are also occasionally issued by FCC and DOC, and in that respect each amateur should keep himself informed by W1AW bulletins, *QST* reports, or by communication with ARRL Hq. concerning a specific point.

On this page and page 14 are summaries of the Canadian and U.S. amateur bands on which operation is permitted as of our press date. AØ and FØ mean unmodulated carriers. A1 means cw telegraphy, A2 is tone-modulated cw telegraphy, A3 is amplitude-modulated phone, A4 is facsimile, A5 is television, F1 is frequency-shift keying, F2 is frequency-modulated tone keying (Morse or teletype), F3 is fm phone, F4 is fm facsimile and F5 is fm television.

CANADIAN AMATEUR BANDS

80 meters	3.500–	3.725 MHz	A1, F1
1) 3) 4) 5)	3.725–	3.750 MHz	A1, A3, A5, F3
	3.750–	4.000 MHz	A1, A3, F3
40 meters	7.000–	7.150 MHz	A1, F1,
1) 3) 4) 5)	7.150–	7.175 MHz	A1, A3, A5, F3
	7.175–	7.300 MHz	A1, A3, F3
20 meters	14.000–	14.100 MHz	A1, F1
1) 3) 4) 5)	14.100–	14.175 MHz	A1, A3, F3
	14.175–	14.350 MHz	A1, A3, A5, F3
15 meters	21.000–	21.100 MHz	A1, F1
1) 3) 4) 5)	21.100–	21.450 MHz	A1, A3, A5, F3
10 meters	28.000–	28.100 MHz	A1, F1
2) 3) 4) 5)	28.100–	29.700 MHz	A1, A3, A5, F3
6 meters	50.000–	50.050 MHz	A1
2) 3) 4)	50.050–	51.100 MHz	A1, A2, A3, F1 F2, F3
	51.000–	52.000 MHz	AØ, A1, A2, A3 A4, F1, F2, F3
	52.000–	54.000 MHz	AØ, A1, A2, A3 A4, F1, F2, F3
2 meters	144.000–	144.100 MHz	A1
2) 3) 4)	144.100–	146.000 MHz	AØ, A1, A2, A3 A4, F1, F2, F3 F4
	146.000–	148.000 MHz	AØ, A1, A2, A3 A4, F1, F2, F3 F4
4) 6)	420.000–	450.000 MHz)	
	1215.000–	1300.000 MHz)	
	2300.000–	2450.000 MHz)	
	3300.000–	3500.000 MHz)	AØ, A1, A2, A3
	5650.000–	5925.000 MHz)	A4, A5, F1, F2
	10000.000–	10500.000 MHz)	F3, F4
	21000.000–	22000.000 MHz)	

1) Phone privileges are restricted to holders of Advanced Amateur Radio Operator Certificates, and of Commercial Certificates.

2) Phone privileges are restricted as in footnote 1), and to holders of Amateur Radio Operators Certificates, whose certificates have been endorsed for operation on phone in these bands.

3) Amplitude modulation (A2, A3, A4) shall not exceed ± 3 kHz (6A3).

4) Frequency modulation (F2, F3, F4) shall not produce a carrier deviation exceeding ±3 kHz. (6F3) except that in the 52–54 MHz and 146–148 MHz bands and higher the carrier deviation shall not exceed ±15 kHz (30F3).

5) Slow Scan television (A5), permitted by special authorization, shall not exceed a bandwidth greater than that occupied by a normal single sideband voice transmission.

6) Television (A5), permitted by special authorization, shall employ a systen of standard interlace and scanning with a bandwidth of not more than 4 MHz.

Operation in frequency band 1.800–2.000 MHz shall be limited to the areas as indicated in the following table and shall be limited to the indicated maximum dc power input to the anode of the final radio frequency stage of the transmitter during day and night hours respectively; for the purpose of this table "day" means the hours between sunrise and sunset, and "night" means the hours between sunset and sunrise. A1, A3 and F3 emission are permitted.

	A	*B*	*C*	*D*	*E*	*F*	*G*	*H*
British Columbia	3 1)	3	3	1	0	0	0	0
Alberta	3 1)	3	3	3	1	0	0	1
Saskatchewan	3 1)	3	3	3	3	1	1	3
Manitoba	3 1)	2	2	2	2	2	2	3 1)
Ontario North of 50° N. Lat.	3	1	1	1	1	0	0	2
Ontario South of 50° N. Lat.	3 1)	2	1	0	0	0	0	1
Province of Quebec North of 52° N. Lat.	1	0	0	1	1	0	0	2
Province of Quebec South of 52° N. Lat.	3	2	1	0	0	0	0	0
New Brunswick	3	2	1	0	0	0	0	0
Nova Scotia	3	2	1	0	0	0	0	0
Prince Edward Island	3	2	1	0	0	0	0	0
Newfoundland (Island)	3	1	1	0	0	0	0	0
Newfoundland (Labrador)	2	0	0	0	0	0	0	0
Yukon Territory	3 1)	3	3	1	0	0	0	0
District of MacKenzie	3 1)	3	3	3	1	0	0	1
District of Keewatin	3	1	1	3	2	0	0	2
District of Franklin	0	0	0	0	1	0	0	1

1) The power levels 500 day – 100 night may be increased to 1000 day – 200 night when authorized by a Radio Inspector of the Department of Communications.

Frequency Band

A 1.800–1.825 kHz	E 1.900–1.925 kHz
B 1.825–1.850 kHz	F 1.925–1.950 kHz
C 1.850–1.875 kHz	G 1.950–1.975 kHz
D 1.875–1.900 kHz	H 1.975–2.000 kHz

Power Level – Watts

O – Operation not permitted	
1 – 25 night	125 day
2 – 50 night	250 day
3 – 100 night	500 day

U.S. AND POSSESSIONS AMATEUR BANDS

kHz

80 m.*	3500–4000	A1
	3500–3800	F1
	3800–3900	A5[1], F5[1]
	3800–4000	A3, F3[2]
40 m.*	7000–7300	A1
	7000–7200	F1
	7200–7250	A5[1], F5[1]
	7200–7300	A3, F3[2]
20 m.*	14000–14350	A1
	14000–14200	F1
	14200–14275	A5[1], F5[1]
	14200–14350	A3, F3[2]

MHz

15 m.*	21.00–21.45	A1
	21.00–21.25	F1
	21.25–21.35	A5[1], F5[1]
	21.25–21.45	A3, F3[2]
10 m.	28.0–29.7	A1
	28.0–28.5	F1
	28.5–29.7	A3, A5[1], F3[2], F5[1]
	29.0–29.7	F3
6 m.*	50.0–54.0	A1
	50.1–54.0	A2, A3, A4, A5[3], F1, F2, F3[2], F5[3]
	51.0–54.0	AØ
	52.5–54.0	F3
2 m.	144-148	A1
	144.1–148	AØ, A2, A3, A4, A5[3], FØ, F1, F2, F3, F5[3]

MHz

220–225	AØ, A1, A2, A3, A4, A5[3] FØ, F1, F2, F3, F4, F5[3]
420–450[4]	AØ, A1, A2, A3, A4, A5, FØ, F1, F2, F3, F4, F5
1,215–1,300	
2,300–2,450 3,300–3,500 5,650–5,925 10,000–10,500[5] 21,000–22,000 All above 40,000	AØ, A1, A2, A3, A4, A5 FØ, F1, F2, F3, F4, F5, pulse

[1] Slow-scan television no wider than a single-sideband voice signal may be used; if voice is simultaneously used, the total signal can be no wider than a standard a-m signal.

[2] Narrow-band frequency- or phase-modulation no wider than standard a-m voice signal.

[3] Slow-scan television no wider than a standard a-m voice signal.

[4] Input power must not exceed 50 watts in Fla., Ariz., and parts of Ga., Ala., Miss., N. Mex., Tex., Nev., and Ca. See the *License Manual* or write ARRL for further details.

[5] No pulse permitted in this band.

NOTE: Frequencies from 3.9-4.0 MHz and 7.1-7.3 MHz are not available to amateurs on Baker, Canton, Enderbury, Guam, Howland, Jarvis, Palmyra, American Samoa, and Wake Islands.

The bands 220 through 10,500 MHz are shared with the Government Radio Positioning Service, which has priority.

Frequency Band

A – 1800–1825 kHz	F – 1900–1925 kHz
B – 1825–1850 kHz	E – 1925–1950 kHz
C – 1850–1875 kHz	G – 1950–1975 kHz
D – 1875–1900 kHz	H – 1975–2000 kHz

Power Level – Watts Input

4 – 1000 day, 200 night
3 – 500 day, 100 night
2 – 200 day, 50 night
1 – 100 day, 25 night
0 – No operation

Privileges

Area	*A*	*B*	*C*	*D*	*E*	*F*	*G*	*H*
Ala., Fla., La., Miss., Swan I., Serrana Bank, Roncador Key	3	1	0	0	0	0	1	3
Alaska, Calif., Nev., Ore., Wash.	4	3	3	1	0	0	0	0
Ariz.	4	3	3	0	0	0	0	0
Colo., Wisc.	4	3	2	0	0	0	0	2
Conn., Me., Mass., N.H., N.J., Penn., R.I., Vt.	3	1	0	0	0	0	0	0
Del., D.C., Md., N.C., Va.	3	1	0	0	0	0	0	1
Ga., S.C., Texas, P.R., V.I., Navassa I.	3	1	0	0	0	0	0	2
Hawaii	0	0	0	0	2	1	1	3
Ida., Minn., Mont., N.D., S.D.	4	3	3	1	1	1	1	3
Ill., Ind., Ky., Tenn.	4	3	1	0	0	0	0	2
Iowa, Neb.	4	3	2	0	0	1	1	3
Kans., Mo., Okla.	4	3	1	0	0	1	1	3
Mich., Ohio, W. Va.	4	3	1	0	0	0	0	1
N. Mex.	4	3	1	0	0	1	3	4
Utah	4	3	3	1	1	0	0	1
Wyoming	4	3	3	1	1	0	0	2
Baker, Canton, Enderbury, Howland	1	0	0	1	1	0	0	1
Guam, Johnston, Midway	0	0	0	0	1	0	0	1
American Samoa	2	0	0	2	2	0	0	2
Wake	1	0	0	1	0	0	0	0
Palmyra, Jarvis I.	0	0	0	0	2	0	0	2

Novice licensees may use the following frequencies, transmitters to be crystal-controlled and have a maximum power input of 75 watts.

3.700–3.750 MHz A1
7.150–7.200 MHz A1
21.100–21.250 MHz A1
145-147 MHz A1, A2, F1, F2

Technician licensees are permitted all amateur privileges in 50.1-54 MHz, 145-147 MHz and in the bands 220 MHz and above.

Except as otherwise specified, the maximum amateur power input is 1000 watts.

*See page 10 for restrictions on usage of parts of these bands.

Electrical Laws and Circuits

ELECTRIC AND MAGNETIC FIELDS

When something occurs at one point in space because something else happened at another point, with no visible means by which the "cause" can be related to the "effect," we say the two events are connected by a field. In radio work, the fields with which we are concerned are the electric and magnetic, and the combination of the two called the electromagnetic field.

A field has two important properties, intensity (magnitude) and direction. The field exerts a *force* on an object immersed in it; this force represents potential (ready-to-be-used) energy, so the potential of the field is a measure of the field intensity. The direction of the field is the direction in which the object on which the force is exerted will tend to move.

An electrically charged object in an electric field will be acted on by a force that will tend to move it in a direction determined by the direction of the field. Similarly, a magnet in a magnetic field will be subject to a force. Everyone has seen demonstrations of magnetic fields with pocket magnets, so intensity and direction are not hard to grasp.

A "static" field is one that neither moves nor changes in intensity. Such a field can be set up by a stationary electric charge (electrostatic field) or by a stationary magnet (magnetostatic field). But if either an electric or magnetic field is moving in space or changing in intensity, the motion or change sets up the other kind of field. That is, a changing electric field sets up a magnetic field, and a changing magnetic field generates an electric field. This interrelationship between magnetic and electric fields makes possible such things as the electromagnet and the electric motor. It also makes possible the electromagnetic waves by which radio communication is carried on, for such waves are simply traveling fields in which the energy is alternately handed back and forth between the electric and magnetic fields.

Lines of Force

Although no one knows what it is that composes the field itself, it is useful to invent a picture of it that will help in visualizing the forces and the way in which they act.

A field can be pictured as being made up of lines of force or flux lines. These are purely imaginary threads that show, by the direction in which they lie, the direction the object on which the force is exerted will move. The *number* of lines in a chosen cross section of the field is a measure of the *intensity* of the force. The number of lines per unit of area (square inch or square centimeter) is called the flux density.

ELECTRICITY AND THE ELECTRIC CURRENT

Everything physical is built up of atoms, particles so small that they cannot be seen even through the most powerful microscope. But the atom in turn consists of several different kinds of still smaller particles. One is the electron, essentially a small particle of electricity. The quantity or charge of electricity represented by the electron is, in fact, the smallest quantity of electricity that can exist. The kind of electricity associated with the electron is called negative.

An ordinary atom consists of a central core called the nucleus, around which one or more electrons circulate somewhat as the earth and other planets circulate around the sun. The nucleus has an electric charge of the kind of electricity called positive, the amount of its charge being just exactly equal to the sum of the negative charges on all the electrons associated with that nucleus.

The important fact about these two "opposite" kinds of electricity is that they are strongly attracted to each other. Also, there is a strong force of repulsion between two charges of the *same* kind. The positive nucleus and the negative electrons are attracted to each other, but two electrons will be repelled from each other and so will two nuclei.

In a normal atom the positive charge on the nucleus is exactly balanced by the negative charges on the electrons. However, it is possible for an atom to lose one of its electrons. When that happens the atom has a little less negative charge than it should – that is, it has a net positive charge. Such an atom is said to be ionized, and in this case the atom is a positive ion. If an atom picks up an extra electron, as it sometimes does, it has a net negative charge and is called a negative ion. A positive ion will attract any stray electron in the vicinity, including the extra one that may be attached to a nearby negative ion. In this way it is possible for electrons to travel from atom to atom. The movement of ions or electrons constitutes the electric current.

The amplitude of the current (its intensity or magnitude) is determined by the rate at which electric charge – an accumulation of electrons or ions of the same kind – moves past a point in a circuit. Since the charge on a single electron or ion is extremely small, the number that must move as a

group to form even a tiny current is almost inconceivably large.

Conductors and Insulators

Atoms of some materials, notably metals and acids, will give up an electron readily, but atoms of other materials will not part with any of their electrons even when the electric force is extremely strong. Materials in which electrons or ions can be moved with relative ease are called conductors, while those that refuse to permit such movement are called nonconductors or insulators. The following list shows how some common materials are classified:

Conductors	*Insulators*	
Metals	Dry Air	Glass
Carbon	Wood	Rubber
Acids	Porcelain	Resins
	Textiles	

Electromotive Force

The electric force or potential (called electromotive force, and abbreviated emf) that causes current flow may be developed in several ways. The action of certain chemical solutions on dissimilar metals sets up an emf; such a combination is called a cell, and a group of cells forms an electric battery. The amount of current that such cells can carry is limited, and in the course of current flow one of the metals is eaten away. The amount of electrical energy that can be taken from a battery consequently is rather small. Where a large amount of energy is needed it is usually furnished by an electric generator, which develops its emf by a combination of magnetic and mechanical means.

Direct and Alternating Currents

In picturing current flow it is natural to think of a single, constant force causing the electrons to move. When this is so, the electrons always move in the same direction through a path or circuit made up of conductors connected together in a continuous chain. Such a current is called a direct current, abbreviated dc. It is the type of current furnished by batteries and by certain types of generators.

It is also possible to have an emf that periodically reverses. With this kind of emf the current flows first in one direction through the circuit and then in the other. Such an emf is called an alternating emf, and the current is called an alternating current (abbreviated ac). The reversals (alternations) may occur at any rate from a few per second up to several billion per second. Two reversals make a cycle; in one cycle the force acts first in one direction, then in the other, and then returns to the first direction to begin the next cycle. The number of cycles in one second is called the frequency of the alternating current.

The difference between direct current and alternating current is show in Fig. 2-1. In these graphs the horizontal axis measures time, increasing toward the right away from the vertical axis. The vertical axis represents the amplitude or strength of the current, increasing in either the up or down direction away from the horizontal axis. If the graph is *above* the horizontal axis the current is flowing in one direction through the circuit (indicated by the + sign) and if it is *below* the horizontal axis the current is flowing in the reverse direction through the circuit (indicated by the – sign). Fig. 2-1A shows that, if we close the circuit – that is, make the path for the current complete – at the time indicated by *X*, the current instantly takes the amplitude indicated by the height *A*. After that, the current continues at the same amplitude as time goes on. This is an ordinary *direct* current.

In Fig. 2-1B, the current starts flowing with the amplitude *A* at time *X*, continues at that amplitude until time *Y* and then instantly ceases. After an interval *YZ* the current again begins to flow and the same sort of start-and-stop performance is repeated. This is an *intermittent* direct current. We could get it by alternately closing and opening a switch in the circuit. It is a *direct* current because the *direction* of current flow does not change; the graph is always on the + side of the horizontal axis.

In Fig. 2-1C the current starts at zero, increases in amplitude as time goes on until it reaches the amplitude *A1* while flowing in the + direction, then decreases until it drops to zero amplitude once more. At that time (*X*) the *direction* of the current flow reverses; this is indicated by the fact that the next part of the graph is below the axis. As time goes on the amplitude increases, with the current now flowing in the – direction, until it reaches amplitude *A2*. Then the amplitude

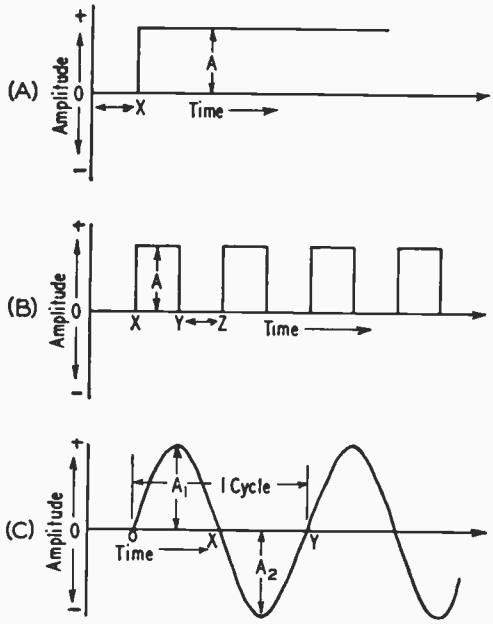

Fig. 2-1 — Three types of current flow. A — direct current; B — intermittent direct current; C — alternating current.

decreases until finally it drops to zero (*Y*) and the direction reverses once more. This is an *alternating* current.

Waveforms

The type of alternating current shown in Fig. 2-1C is known as a sine wave. The variations in many ac waves are not so smooth, nor is one half-cycle necessarily just like the preceding one in shape. However, these complex waves can be shown to be the sum of two or more sine waves of frequencies that are exact integral (whole-number) multiples of some lower frequency. The lowest frequency is called the fundamental, and the higher frequencies are called harmonics.

Fig. 2-2 shows how a fundamental and a second harmonic (twice the fundamental) might add to form a complex wave. Simply by changing the relative amplitudes of the two waves, as well as the times at which they pass through zero amplitude, an infinite number of waveshapes can be constructed from just a fundamental and second harmonic. More complex waveforms can be constructed if more harmonics are used.

Frequency multiplication, the generation of second, third and higher-order harmonics, takes place whenever a fundamental since wave is passed through a nonlinear device. The distorted output is made up of the fundamental frequency plus harmonics; a desired harmonic can be selected through the use of tuned circuits. Typical nonlinear devices used for frequency multiplication include rectifiers of any kind and amplifiers that distort an applied signal.

Electrical Units

The unit of electromotive force is called the volt. An ordinary flashlight cell generates and emf of about 1.5 volts. The emf commonly supplied for domestic lighting and power is 117 volts ac at a frequency of 60 cycles per second.

The flow of electric current is measured in amperes. One ampere is equivalent to the movement of many billions of electrons past a point in the circuit in one second. The *direct* currents used in amateur radio equipment usually are not large, and it is customary to measure such currents in milliamperes. One milliampere is equal to one one-thousandth of an ampere.

A "dc ampere" is a measure of a *steady* current, but the "ac ampere" must measure a current that is continually varying in amplitude and periodically reversing direction. To put the two on the same basis, an ac ampere is defined as the current that will cause the same heating effect as one ampere of steady direct current. For sine-wave ac, this effective or (rms, for *root mean square*, the mathematical derivation) value is equal to the *maximum* (or peak) amplitude (*A1* or *A2* in Fig. 2-1C) multiplied by 0.707. The instantaneous value is the value that the current (or voltage) has at any selected instant in the cycle. If all the instantaneous values in a sine wave are averaged over a *half*-cycle, the resulting figure is the average value. It is equal to 0.636 times the maximum amplitude.

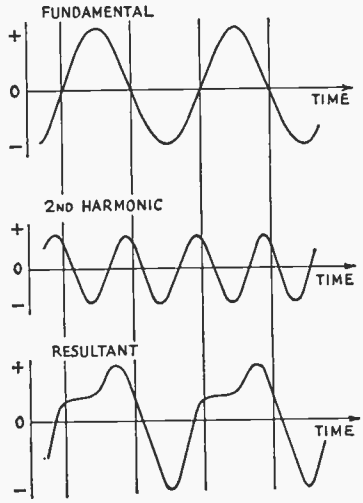

Fig. 2-2 — A complex waveform. A fundamental (top) and second harmonic (center) added together, point by point at each instant, result in the waveform shown at the bottom. When the two components have the same polarity at a selected instant, the resultant is the simple sum of the two. When they have opposite polarities, the resultant is the *difference*; if the negative-polarity component is larger, the resultant is negative at that instant.

FREQUENCY AND WAVELENGTH

Frequency Spectrum

Frequencies ranging from about 15 to 15,000 cycles per second (cps ,Hertz, or Hz) are called audio frequencies, because the vibrations of air particles that our ears recognize as sounds occur at a similar rate. Audio frequencies (abbreviated af) are used to actuate loudspeakers and thus create sound waves.

Frequencies above about 15,000 cps are called radio frequencies (rf) because they are useful in radio transmission. Frequencies all the way up to and beyond 10,000,000,000 cps have been used for radio purposes. At radio frequencies it becomes convenient to use a larger unit than the cycle. Two such units are the kilohertz, which is equal to 1000 cycles (or hz), and is abbreviated to kHz, and the megahertz, which is equal to 1,000,000 hertz or 1000 kilohertz, and is abbreviated MHz.

The various radio frequencies are divided off into classifications. These classifications, listed below, constitute the frequency spectrum so far as it extends for radio purposes at the present time.

Frequency	*Classification*	*Abbrev*
10 to 30 kHz	Very-low frequencies	vlf
30 to 300 kHz	Low frequencies	lf
300 to 3000 kHz	Medium frequencies	mf
3 to 30 MHz	High frequencies	hf
30 to 300 MHz	Very-high frequencies	vhf
300 to 3000 MHz	Ultrahigh frequencies	uhf
3000 to 30,000 MHz	Superhigh frequencies	shf

Wavelength

Radio waves travel at the same speed as light – 300,000,000 meters or about 186,000 miles a second in space. They can be set up by a radio-frequency current flowing in a circuit, because the rapidly changing current sets up a magnetic field that changes in the same way, and the varying magnetic field in turn sets up a varying electric field. And whenever this happens, the two fields move outward at the speed of light.

Suppose an rf current has a frequency of 3,000,000 cycles per second. The field will go through complete reversals (one cycle) in 1/3,000,000 second. In that same period of time the fields – that is, the wave – will move 300,000,000/3,000,000 meters, or 100 meters. By the time the wave has moved that distance the next cycle has begun and a new wave has started out. The first wave, in other words, covers a distance of 100 meters before the beginning of the next, and so on. This distance is the wavelength.

The longer the time of one cycle – that is, the lower the frequency – the greater the distance occupied by each wave and hence the longer the wavelength. The relationship between wavelength and frequency is shown by the formula

$$\lambda = \frac{300{,}000}{f}$$

where λ = Wavelength in meters
f = Frequency in kilohertz

or

$$\lambda = \frac{300}{f}$$

where λ = Wavelength in meters
f = Frequency in megahertz

Example: The wavelength corresponding to a frequency of 3650 kilohertz is

$$\lambda = \frac{300{,}000}{3650} = 82.2 \text{ meters}$$

RESISTANCE

Given two conductors of the same size and shape, but of different materials, the amount of current that will flow when a given emf is applied will be found to vary with what is called the resistance of the material. The lower the resistance, the greater the current for a given value of emf.

Resistance is measured in ohms. A circuit has a resistance of one ohm when an applied emf of one volt causes a current of one ampere to flow. The resistivity of a material is the resistance, in ohms, of a cube of the material measuring one centimeter on each edge. One of the best conductors is copper, and it is frequently convenient, in making resistance calculations, to compare the resistance of the material under consideration with that of a copper conductor of the same size and shape. Table 2-1 gives the ratio of the resistivity of various conductors to that of copper.

The longer the path through which the current flows the higher the resistance of that conductor.

TABLE 2-1

Relative Resistivity of Metals

Materials	*Resistivity Compared to Copper*
Aluminum (pure)	1.6
Brass	3.7–4.9
Cadmium	4.4
Chromium	1.8
Copper (hard-drawn)	1.03
Copper (annealed)	1.00
Gold	1.4
Iron (pure)	5.68
Lead	12.8
Nickel	5.1
Phosphor Bronze	2.8–5.4
Silver	0.94
Steel	7.6–12.7
Tin	6.7
Zinc	3.4

For direct current and low-frequency alternating currents (up to a few thousand cycles per second) the resistance is *inversely* proportional to the cross-sectional area of the path the current must travel; that is, given two conductors of the same material and having the same length, but differing in cross-sectional area, the one with the larger area will have the lower resistance.

Resistance of Wires

The problem of determining the resistance of a round wire of given diameter and length – or its opposite, finding a suitable size and length of wire to supply a desired amount of resistance – can be easily solved with the help of the copper-wire table given in a later chapter. This table gives the resistance, in ohms per thousand feet, of each standard wire size.

Example: Suppose a resistance of 3.5 ohms is needed and some No. 28 wire is on hand. The wire table in Chapter 18 shows that No. 28 has a resistance of 66.17 ohms per thousand feet. Since the desired resistance is 3.5 ohms, the length of wire required will be

$$\frac{3.5}{66.17} \times 1000 = 52.89 \text{ feet.}$$

Or, suppose that the resistance of the wire in the circuit must not exceed 0.05 ohm and that the length of wire required for making the connections totals 14 feet. Then

$$\frac{14}{1000} \times R = 0.05 \text{ ohm}$$

where R is the maximum allowable resistance in ohms per thousand feet. Rearranging the formula gives

$$R = \frac{0.05 \times 1000}{14} = 3.57 \text{ ohms/1000 ft.}$$

Reference to the wire table shows that No. 15 is the smallest size having a resistance less than this value.

When the wire is not copper, the resistance values given in the wire table should be multiplied by the ratios given in Table 2-1 to obtain the resistance.

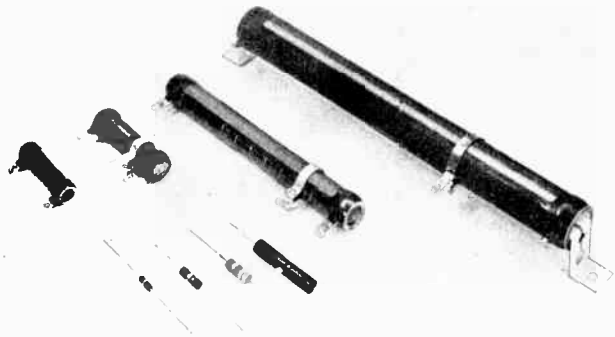

Types of resistors used in radio equipment. Those in the foreground with wire leads are carbon types, ranging in size from 1/2 watt at the left to 2 watts at the right. The larger resistors use resistance wire wound on ceramic tubes; sizes shown range from 5 watts to 100 watts. Three are the adjustable type, having a sliding contact on an exposed section of the resistance winding.

Example: If the wire in the first example were nickel instead of copper the length required for 3.5 ohms would be

$$\frac{3.5}{66.17 \times 5.1} \times 1000 = 10.37 \text{ feet}$$

Temperature Effects

The resistance of a conductor changes with its temperature. Although it is seldom necessary to consider temperature in making resistance calculations for amateur work, it is well to know that the resistance of practically all metallic conductors increases with increasing temperature. Carbon, however, acts in the opposite way; its resistance *decreases* when its temperature rises. The temperature effect is important when it is necessary to maintain a constant resistance under all conditions. Special materials that have little or no change in resistance over a wide temperature range are used in that case.

Resistors

A "package" of resistance made up into a single unit is called a resistor. Resistors having the same resistance value may be considerably different in size and construction. The flow of current through resistance causes the conductor to become heated; the higher the resistance and the larger the current, the greater the amount of heat developed. Resistors intended for carrying large currents must be physically large so the heat can be radiated quickly to the surrounding air. If the resistor does not get rid of the heat quickly it may reach a temperature that will cause it to melt or burn.

Skin Effect

The resistance of a conductor is not the same for alternating current as it is for direct current. When the current is alternating there are internal effects that tend to force the current to flow mostly in the outer parts of the conductor. This decreases the effective cross-sectional area of the conductor, with the result that the resistance increases.

For low audio frequencies the increase in resistance is unimportant, but at radio frequencies this skin effect is so great that practically all the current flow is confined within a few thousandths of an inch of the conductor surface. The rf resistance is consequently many times the dc resistance, and increases with increasing frequency. In the rf range a conductor of thin tubing will have just as low resistance as a solid conductor of the same diameter, because material not close to the surface carries practically no current.

Conductance

The reciprocal of resistance (that is, $1/R$) is called conductance. It is usually represented by the symbol G. A circuit having large conductance has low resistance, and vice versa. In radio work the term is used chiefly in connection with vacuum-tube characteristics. The unit of conductance is the mho. A resistance of one ohm has a conductance of one mho, a resistance of 1000 ohms has a conductance of .001 mho, and so on. A unit frequently used in connection with vacuum tubes is the micromho, or one-millionth of a mho. It is the conductance of a resistance of one megohm.

OHM'S LAW

The simplest form of electric circuit is a battery with a resistance connected to its terminals, as shown by the symbols in Fig. 2-3. A complete circuit must have an unbroken path so current can flow out of the battery, through the apparatus connected to it, and back into the battery. The circuit is broken, or open, if a connection is removed at any point. A switch is a device for making and breaking connections and thereby closing or opening the circuit, either allowing current to flow or preventing it from flowing.

The values of current, voltage and resistance in a circuit are by no means independent of each

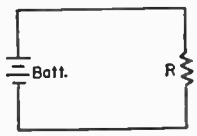

Fig. 2-3 — A simple circuit consisting of a battery and resistor.

TABLE 2-II

Conversion Factors for Fractional and Multiple Units

Change From	*To*	*Divide by*	*Multiply by*
Units	Micro-units		1,000,000
	Milli-units		1,000
	Kilo-units	1,000	
	Mega-units	1,000,000	
Micro-units	Milli-units	1,000	
	Units	1,000,000	
Milli-units	Micro-units		1,000
	Units	1,000	
Kilo-units	Units		1,000
	Mega-units	1,000	
Mega-units	Units		1,000,000
	Kilo-units		1,000

other. The relationship between them is known as Ohm's Law. It can be stated as follows: The current flowing in a circuit is directly proportional to the applied emf and inversely proportional to the resistance. Expressed as an equation, it is

$$I \text{ (amperes)} = \frac{E \text{ (volts)}}{R \text{ (ohms)}}$$

The equation above gives the value of current when the voltage and resistance are known. It may be transposed so that each of the three quantities may be found when the other two are known:

$$E = IR$$

(that is, the voltage acting is equal to the current in amperes multiplied by the resistance in ohms) and

$$R = \frac{E}{I}$$

(or, the resistance of the circuit is equal to the applied voltage divided by the current).

All three forms of the equation are used almost constantly in radio work. It must be remembered that the quantities are in *volts*, *ohms* and *amperes*; other units cannot be used in the equations without first being converted. For example, if the current is in milliamperes it must be changed to the equivalent fraction of an ampere before the value can be substituted in the equations.

Table 2-II shows how to convert between the various units in common use. The prefixes attached to the basic-unit name indicate the nature of the unit. These prefixes are:

micro – one-millionth (abbreviated μ)
milli – one-thousandth (abbreviated *m*)
kilo – one thousand (abbreviated *k*)
mega – one million (abbreviated *M*)

For example, one microvolt is one-millionth of a volt, and one megohm is 1,000,000 ohms. There are therefore 1,000,000 microvolts in one volt, and 0.000001 megohm in one ohm.

The following examples illustrate the use of ohm's law:

The current flowing in a resistance of 20,000 ohms is 150 milliamperes. What is the voltage? Since the voltage is to be found, the equation to use is $E = IR$. The current must first be converted from milliamperes to amperes, and reference to the table shows that to do so it is necessary to divide by 1000. Therefore,

$$E = \frac{150}{1000} \times 20{,}000 = 3000 \text{ volts}$$

When a voltage of 150 is applied to a circuit the current is measured at 2.5 amperes. What is the resistance of the circuit? In this case R is the unknown, so

$$R = \frac{E}{I} = \frac{150}{2.5} = 60 \text{ ohms}$$

No conversion was necessary because the voltage and current were given in volts and amperes.

How much current will flow if 250 volts is applied to a 5000-ohm resistor? Since I is unknown

$$I = \frac{E}{R} = \frac{250}{5000} = 0.05 \text{ ampere}$$

Milliampere units would be more convenient for the current, and 0.05 amp. × 1000 = 50 milliamperes.

SERIES AND PARALLEL RESISTANCES

Very few actual electric circuits are as simple as the illustration in the preceding section. Commonly, resistances are found connected in a variety of ways. The two fundamental methods of connecting resistances are shown in Fig. 2-4. In the upper drawing, the current flows from the source of emf (in the direction shown by the arrow, let us say) down through the first resistance, *R1*, then through the second, *R2*, and then back to the source. These resistors are connected in series. The current everywhere in the circuit has the same value.

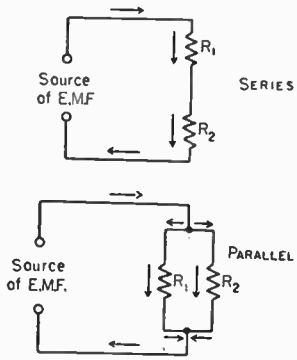

Fig. 2-4 — Resistors connected in series and in parallel.

In the lower drawing the current flows to the common connection point at the top of the two resistors and then divides, one part of it flowing through *R1* and the other through *R2*. At the lower connection point these two currents again combine; the total is the same as the current that flowed into the upper common connection. In this case the two resistors are connected in parallel.

Resistors in Series

When a circuit has a number of resistances connected in series, the total resistance of the circuit is the sum of the individual resistances. If these are numbered *R1*, *R2*, *R3*, etc., then

R (total) = R1 + R2 + R3 + R4 + ...

where the dots indicate that as many resistors as necessary may be added.

Example: Suppose that three resistors are connected to a source of emf as shown in Fig. 2-5. The emf is 250 volts. R1 is 5000 ohms, R2 is 20,000 ohms, and R3 is 8000 ohms. The total resistance is then

$$R = R1 + R2 + R3 = 5000 + 20{,}000 + 8000 = 33{,}000 \text{ ohms}$$

The current flowing in the circuit is then

$$I = \frac{E}{R} = \frac{250}{33{,}000} = 0.00757 \text{ amp.} = 7.57 \text{ mA.}$$

(We need not carry calculations beyond three significant figures, and often two will suffice because the accuracy of measurements is seldom better than a few percent.)

Voltage Drop

Ohm's Law applies to *any part* of a circuit as well as to the whole circuit. Although the current is the same in all three of the resistances in the example, the total voltage divides among them. The voltage appearing across each resistor (the voltage drop) can be found from Ohm's Law.

Example: If the voltage across R1 (Fig. 2-5) is called E1, that across R2 is called E2, and that across R3 is called E3, then

$E1 = IR1 = 0.00757 \times 5000 = 37.9$ volts
$E2 = IR2 = 0.00757 \times 20{,}000 = 151.4$ volts
$E3 = IR3 = 0.00757 \times 8000 = 60.6$ volts

The applied voltage must equal the sum of the individual voltage drops:

$$E = E1 + E2 + E3 = 37.9 + 151.4 + 60.6 = 249.9 \text{ volts}$$

The answer would have been more nearly exact if the current had been calculated to more decimal places, but as explained above a very high order of accuracy is not necessary.

In problems such as this considerable time and trouble can be saved, when the current is small enough to be expressed in milliamperes, if the resistance is expressed in kilohms rather than ohms. When resistance in kilohms is substituted directly in Ohm's Law the current will be milliamperes if the emf is in volts.

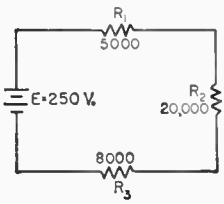

Fig. 2-5 — An example of resistors in series. The solution of the circuit is worked out in the text.

Resistors in Parallel

In a circuit with resistances in parallel, the total resistance is *less* than that of the *lowest* value of resistance present. This is because the total current is always greater than the current in any individual resistor. The formula for finding the total resistance of resistances in parallel is

$$R = \frac{1}{\frac{1}{R1} + \frac{1}{R2} + \frac{1}{R3} + \frac{1}{R4} + \ldots\ldots}$$

where the dots again indicate that any number of resistors can be combined by the same method. For only two resistances in parallel (a very common case) the formula becomes

$$R = \frac{R1R2}{R1 + R2}$$

Example: If a 500-ohm resistor is paralleled with one of 1200 ohms, the total resistance is

$$R = \frac{R1R2}{R1 + R2} = \frac{500 \times 1200}{500 + 1200} = \frac{600{,}000}{1700} = 353 \text{ ohms}$$

It is probably easier to solve practical problems by a different method than the "reciprocal of reciprocals" formula. Suppose the three resistors of the previous example are connected in parallel as shown in Fig. 2-6. The same emf, 250 volts, is applied to all three of the resistors. The current in each can be found from Ohm's Law as shown below, *I1*, being the current through *R1*, *I2* the current through *R2* and *I3* the current through *R3*.

For convenience, the resistance will be expressed in kilohms so the current will be in milliamperes.

$$I1 = \frac{E}{R1} = \frac{250}{5} = 50 \text{ mA}$$

$$I2 = \frac{E}{R2} = \frac{250}{20} = 12.5 \text{ mA}$$

$$I3 = \frac{E}{R3} = \frac{250}{8} = 31.25 \text{ mA}$$

The total current is

$$I = I1 + I2 + I3 = 50 + 12.5 + 31.25 = 93.75 \text{ mA}$$

The total resistance of the circuit is therefore

$$R = \frac{E}{I} = \frac{250}{93.75} = 2.66 \text{ kilohms } (= 2660 \text{ ohms})$$

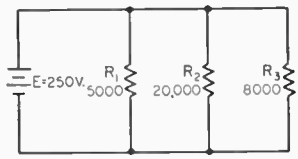

Fig. 2-6 — An example of resistors in parallel. The solution is worked out in the text.

Resistors in Series-Parallel

An actual circuit may have resistances both in parallel and in series. To illustrate, we use the same three resistances again, but now connected as in Fig. 2-7. The method of solving a circuit such as Fig. 2-7 is as follows: Consider *R2* and *R3* in parallel as through they formed a single resistor. Find their equivalent resistance. Then this resistance in series with *R1* forms a simple series circuit, as shown at the right in Fig. 2-7. An example of the arithmetic is given under the illustration.

Using the same principles, and staying within the practical limits, a value for *R2* can be computed that will provide a given voltage drop across *R3* or a given current through *R1*. Simple algebra is required.

Example: The first step is to find the equivalent resistance of R2 and R3. From the formula for two resistances in parallel,

$$R_{eq.} = \frac{R2R3}{R2 + R3} = \frac{20 \times 8}{20 + 8} = \frac{160}{28} = 5.71 \text{ kilohms}$$

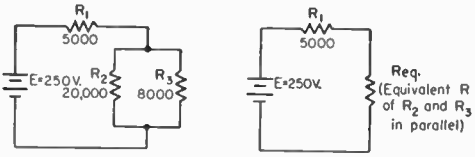

Fig. 2-7 — An example of resistors in series-parallel. The equivalent circuit is at the right. The solution is worked out in the text.

The total resistance in the circuit is then

$$R = R1 + Req. = 5 + 5.71 \text{ kilohms}$$
$$= 10.71 \text{ kilohms}$$

The current is

$$I = \frac{E}{R} = \frac{250}{10.71} = 23.3 \text{ mA}$$

The voltage drops across R1 and Req are

$E1 = IR1 = 23.3 \times 5 = 117$ volts
$E2 = IReq = 23.3 \times 5.71 = 133$ volts

with sufficient accuracy. These total 250 volts, thus checking the calculations so far, because the sum of the voltage drops must equal the applied voltage. Since E2 appears across both R2 and R3,

$$I2 = \frac{E2}{R2} = \frac{133}{20} = 6.65 \text{ mA}$$

$$I3 = \frac{E2}{R3} = \frac{133}{8} = 16.6 \text{ mA}$$

where I2 = Current through R2
I3 = Current through R3

The total is 23.25 mA, which checks closely enough with 23.3 mA, the current through the whole circuit.

POWER AND ENERGY

Power — the rate of doing work — is equal to voltage multiplied by current. The unit of electrical power, called the watt, is equal to one volt multiplied by one ampere. The equation for power therefore is

$P = EI$ where P = Power in watts
E = Emf in volts
I = Current in amperes

Common fractional and multiple units for power are the milliwatt, one one-thousandth of a watt, and the kilowatt, or one thousand watts.

Example: The plate voltage on a transmitting vacuum tube is 2000 volts and the plate current is 350 milliamperes. (The current must be changed to amperes before substitution in the formula, and so is 0.35 amp.) Then

$$P = EI = 2000 \times 0.35 = 700 \text{ watts}$$

By substituting the Ohm's Law equivalent for E and I, the following formulas are obtained for power:

$$P = \frac{E^2}{R} \qquad P = I^2R$$

These formulas are useful in power calculations when the resistance and either the current or voltage (but not both) are known.

Example: How much power will be used up in a 4000-ohm resistor if the voltage applied to it is 200 volts? From the equation

$$P = \frac{E^2}{R} = \frac{(200)^2}{4000} = \frac{40,000}{4000} = 10 \text{ watts}$$

Or, suppose a current of 20 milliamperes flows through a 300-ohm resistor. Then

$$P = I^2R = (0.02)^2 \times 300 = 0.0004 \times 300$$
$$= 0.12 \text{ watt}$$

Note that the current was changed from milliamperes to amperes before substitution in the formula.

Electrical power in a resistance is turned into heat. The greater the power the more rapidly the heat is generated. Resistors for radio work are made in many sizes, the smallest being rated to "dissipate" (or carry safely) about 1/8 watt. The largest resistors commonly used in amateur equipment will dissipate about 100 watts.

Generalized Definition of Resistance

Electrical power is not always turned into heat. The power used in running a motor, for example, is converted to mechanical motion. The power supplied to a radio transmitter is largely converted into radio waves. Power applied to a loudspeaker is changed into sound waves. But in every case of this kind the power is completely "used up" — it cannot be recovered. Also, for proper operation of the device the power must be supplied at a definite ratio of voltage to current. Both these features are characteristics of resistance, so it can be said that any device that dissipates power has a definite value of "resistance." This concept of resistance as something that absorbs power at a definite voltage/current ratio is very useful, since it permits substituting a simple resistance for the load or power-consuming part of the device receiving power, often with considerable simplification of calculations. Of course, every electrical device has some resistance of its own in the more narrow sense, so a part of the power supplied to it is dissipated in that resistance and hence appears as heat even though the major part of the power may be converted to another form.

Efficiency

In devices such as motors and vacuum tubes, the object is to obtain power in some other form than heat. Therefore power used in heating is considered to be a loss, because it is not the *useful* power. The efficiency of a device is the useful power output (in its converted form) divided by the power input to the device. In a vacuum-tube transmitter, for example, the object is to convert power from a dc source into ac power at some radio frequency. The ratio of the rf power output to the dc input is the efficiency of the tube. That is,

$$Eff. = \frac{P_o}{P_i}$$

where $Eff.$ = Efficiency (as a decimal)
P_o = Power output (watts)
P_i = Power input (watts)

Example: If the dc input to the tube is 100 watts, and the rf power output is 60 watts, the efficiency is

$$Eff. = \frac{P_o}{P_i} = \frac{60}{100} = 0.6$$

Efficiency is usually expressed as a percentage; that is, it tells what percent of the input power will be available as useful output. The efficiency in the above example is 60 percent.

Energy

In residences, the power company's bill is for electrical energy, not for power. What you pay for

is the *work* that electricity does for you, not the *rate* at which that work is done. Electrical work is equal to power multiplied by time; the common unit is the watt-hour, which means that a power of one watt has been used for one hour. That is,

$W = PT$ where W = Energy in watt-hours
P = Power in watts
T = Time in hours

Other energy units are the kilowatt-hour and the watt-second. These units should be self-explanatory.

Energy units are seldom used in amateur practice, but it is obvious that a small amount of power used for a long time can eventually result in a "power" bill that is just as large as though a large amount of power had been used for a very short time.

CAPACITANCE

Suppose two flat metal plates are placed close to each other (but not touching) and are connected to a battery through a switch, as shown in Fig. 2-8. At the instant the switch is closed, electrons will be attracted from the upper plate to the positive terminal of the battery, and the same number will be repelled into the lower plate from the negative battery terminal. Enough electrons move into one plate and out of the other to make the emf between them the same as the emf of the battery.

If the switch is opened after the plates have been charged in this way, the top plate is left with a deficiency of electrons and the bottom plate with an excess. The plates remain charged despite the fact that the battery no longer is connected. However, if a wire is touched between the two plates (short-circuiting them) the excess electrons on the bottom plate will flow through the wire to the upper plate, thus restoring electrical neutrality. The plates have then been discharged.

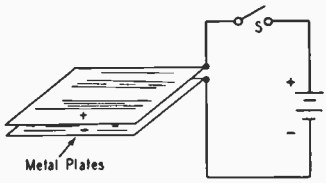

Fig. 2-8 — A simple capacitor.

The two plates constitute an electrical capacitor; a capacitor possesses the property of storing electricity. (The energy actually is stored in the electric field between the plates.) During the time the electrons are moving — that is, while the capacitor is being charged or discharged — a current is flowing in the circuit even though the circuit is "broken" by the gap between the capacitor plates. However, the current flows only during the time of charge and discharge, and this time is usually very short. There can be no continuous flow of direct current "through" a capacitor, but an alternating current can pass through easily if the frequency is high enough.

The charge or quantity of electricity that can be placed on a capacitor is proportional to the applied voltage and to the capacitance of the capacitor. The larger the plate area and the smaller the spacing between the plate the greater the capacitance. The capacitance also depends upon the kind of insulating material between the plates; it is smallest with air insulation, but substitution of other insulating materials for air may increase the capacitance many times. The ratio of the capacitance with some material other than air between the plates, to the capacitance of the same capacitor with air insulation, is called the dielectric constant of that particular insulating material. The material itself is called a dielectric. The dielectric constants of a number of materials commonly used as dielectrics in capacitors are given in Table 2-III. If a sheet of polystyrene is substituted for air between the plates of a capacitor, for example, the capacitance will be increased 2.6 times.

Units

The fundamental unit of capacitance is the farad, but this unit is much too large for practical work. Capacitance is usually measured in microfarads (abbreviated μF) or picofarads (pF). The microfarad is one-millionth of a farad, and the picofarad (formerly micromicrofarad) is one-millionth of a microfarad. Capacitors nearly always have more than two plates, the alternate plates being connected together to form two sets as shown in Fig. 2-9. This makes it possible to attain a fairly large capacitance in a small space, since several plates of smaller individual area can be

TABLE 2-III

Dielectric Constants and Breakdown Voltages

Material	*Dielectric Constant**	*Puncture Voltage***
Air	1.0	
Alsimag 196	5.7	240
Bakelite	4.4–5.4	300
Bakelite, mica-filled	4.7	325–375
Cellulose acetate	3.3–3.9	250–600
Fiber	5–7.5	150–180
Formica	4.6–4.9	450
Glass, window	7.6–8	200–250
Glass, Pyrex	4.8	335
Mica, ruby	5.4	3800–5600
Mycalex	7.4	250
Paper, Royalgrey	3.0	200
Plexiglass	2.8	990
Polyethylene	2.3	1200
Polystyrene	2.6	500–700
Porcelain	5.1–5.9	40–100
Quartz, fuxed	3.8	1000
Steatite, low-loss	5.8	150–315
Teflon	2.1	1000–2000

* At 1 MHz ** In volts per mil (0.001 inch)

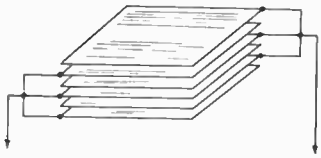

Fig. 2-9 — A multiple-plate capacitor. Alternate plates are connected together.

stacked to form the equivalent of a single large plate of the same total area. Also, all plates, except the two on the ends, are exposed to plates of the other group on *both sides*, and so are twice as effective in increasing the capacitance.

The formula for calculating capacitance is:

$$C = 0.224 \frac{KA}{d} (n - 1)$$

where C = Capacitance in pF.
K = Dielectric constant of material between plates
A = Area of one side of *one* plate in square inches
d = Separation of plate surfaces in inches
n = Number of plates

If the plates in one group do not have the same area as the plates in the other, use the area of the *smaller* plates.

Capacitors in Radio

The types of capacitors used in radio work differ considerably in physical size, construction, and capacitance. Some representative types are shown in the photograph. In variable capacitors (almost always constructed with air for the dielectric) one set of plates is made movable with respect to the other set so that the capacitance can be varied. Fixed capacitors — that is, assemblies having a single, non-adjustable value of capacitance — also can be made with metal plates and with air as the dielectric, but usually are constructed from plates of metal foil with a thin solid or liquid dielectric sandwiched in between, so that a relatively large capacitance can be secured in a small unit. The solid dielectrics commonly used are mica, paper and special ceramics. An example of a liquid dielectric is mineral oil. The electrolytic capacitor uses aluminum-foil plates with a semiliquid conducting chemical compound between them; the actual dielectric is a very thin film of insulating material that forms on one set of plates through electrochemical action when a dc voltage is applied to the capacitor. The capacitance obtained with a given plate area in an electrolytic capacitor is very large, compared with capacitors having other dielectrics, because the film is so thin — much less than any thickness that is practicable with a solid dielectric.

The use of electrolytic and oil-filled capacitors is confined to power-supply filtering and audio bypass applications. Mica and ceramic capacitors are used throughout the frequency range from audio to several hundred megacycles.

Voltage Breakdown

When a high voltage is applied to the plates of a capacitor, a considerable force is exerted on the electrons and nuclei of the dielectric. Because the dielectric is an insulator the electrons do not become detached from atoms the way they do in conductors. However, if the force is great enough the dielectric will "break down"; usually it will puncture and may char (if it is solid) and permit current to flow. The breakdown voltage depends upon the kind and thickness of the dielectric, as shown in Table 2-III. It is not directly proportional to the thickness; that is, doubling the thickness does not quite double the breakdown voltage. If the dielectric is air or any other gas, breakdown is evidenced by a spark or arc between the plates, but if the voltage is removed the arc ceases and the capacitor is ready for use again. Breakdown will occur at a lower voltage between pointed or sharp-edged surfaces than between rounded and polished surfaces; consequently, the breakdown voltage between metal plates of given spacing in air can be increased by buffing the edges of the plates.

Since the dielectric must be thick to withstand high voltages, and since the thicker the dielectric the smaller the capacitance for a given plate area, a high-voltage capacitor must have more plate area than a low-voltage one of the same capacitance. High-voltage high-capacitance capacitors are physically large.

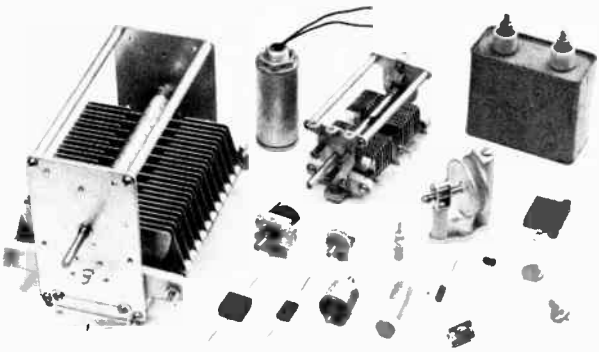

Fixed and variable capacitors. The large unit at the left is a transmitting-type variable capacitor for rf tank circuits. To its right are other air-dielectric variables of different sizes ranging from the midget "air padder" to the medium-power tank capacitor at the top center. The cased capacitors in the top row are for power-supply filters, the cylindrical-can unit being an electrolytic and the rectangular one a paper-dielectric capacitor. Various types of mica, ceramic, and paper-dielectric capacitors are in the foreground.

CAPACITORS IN SERIES AND PARALLEL

The terms "parallel" and "series" when used with reference to capacitors have the same circuit meaning as with resistances. When a number of capacitors are connected in parallel, as in Fig. 2-10, the total capacitance of the group is equal to the sum of the individual capacitances, so

$C\,(\text{total}) = C1 + C2 + C3 + C4 + \ldots\ldots\ldots\ldots\ldots$

However, if two or more capacitors are connected in series, as in the second drawing, the total capacitance is less than that of the smallest capacitor in the group. The rule for finding the capacitance of a number of series-connected capacitors is the same as that for finding the resistance of a number of *parallel*-connected resistors. That is,

$$C\,(\text{total}) = \frac{1}{\frac{1}{C1} + \frac{1}{C2} + \frac{1}{C3} + \frac{1}{C4} + \cdots\cdots\cdots}$$

and, for only two capacitors in series,

$$C\,(\text{total}) = \frac{C1C2}{C1 + C2}$$

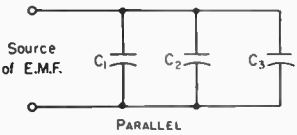

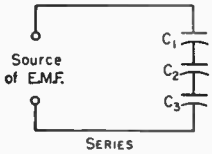

Fig. 2-10 — Capacitors in parallel and in series.

The same units must be used throughout; that is, all capacitances must be expressed in either μF or pF; both kinds of units cannot be used in the same equation.

Capacitors are connected in parallel to obtain a larger total capacitance than is available in one unit. The largest voltage that can be applied safely to a group of capacitors in parallel is the voltage that can be applied safely to the one having the *lowest* voltage rating.

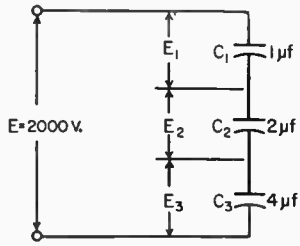

Fig. 2-11 — An example of capacitors connected in series. The solution to this arrangement is worked out in the text.

When capacitors are connected in series, the applied voltage is divided up among them, the situation is much the same as when resistors are in series and there is a voltage drop across each. However, the voltage that appears across each capacitor of a group connected in series is in *inverse* proportion to its capacitance, as compared with the capacitance of the whole group.

Example: Three capacitors having capacitances of 1, 2 and 4 μF, respectively, are connected in series as shown in Fig. 2-11. The total capacitance is

$$C = \frac{1}{\frac{1}{C1} + \frac{1}{C2} + \frac{1}{C3}} = \frac{1}{\frac{1}{1} + \frac{1}{2} + \frac{1}{4}} = \frac{1}{\frac{7}{4}} = \frac{4}{7}$$

$$= 0.571\ \mu\text{F}$$

The voltage across each capacitor is proportional to the *total* capacitance divided by the capacitance of the capacitor in question, so the voltage across C1 is

$$E1 = \frac{0.571}{1} \times 2000 = 1142 \text{ volts}$$

Similarly, the voltages across C2 and C3 are

$$E2 = \frac{0.571}{2} \times 2000 = 571 \text{ volts}$$

$$E3 = \frac{0.571}{4} \times 2000 = 286 \text{ volts}$$

totaling approximately 2000 volts, the applied voltage.

Capacitors are frequently connected in series to enable the group to withstand a larger voltage (at the expense of decreased total capacitance) than any individual capacitor is rated to stand. However, as shown by the previous example, the applied voltages does not divide equally among the capacitors (except when all the capacitances are the same) so care must be taken to see that the voltage rating of no capacitor in the group is exceeded.

INDUCTANCE

It is possible to show that the flow of current through a conductor is accompanied by magnetic effects; a compass needle brought near the conductor, for example, will be deflected from its normal north-south position. The current, in other words, sets up a magnetic field.

The transfer of energy to the magnetic field represents work done by the source of emf. Power is required for doing work, and since power is equal to current multiplied by voltage, there must be a voltage drop in the circuit during the time in which energy is being stored in the field. This voltage "drop" (which has nothing to do with the voltage drop in any resistance in the circuit) is the result of an opposing voltage "induced" in the circuit while the field is building up to its final value. When the field becomes constant the induced emf or back emf disappears, since no further energy is being stored.

Since the induced emf opposes the emf of the source, it tends to prevent the current from rising rapidly when the circuit is closed. The amplitude of the induced emf is proportional to the rate at which the current is changing and to a constant associated with the circuit itself, called the inductance of the circuit.

Inductance depends on the physical characteristics of the conductor. If the conductor is formed into a coil, for example, its inductance is increased. A coil of many turns will have more inductance than one of few turns, if both coils are otherwise physically similar. Also, if a coil is placed on an iron core its inductance will be greater than it was without the magnetic core.

The polarity of an induced emf is always such as to oppose any change in the current in the circuit. This means that when the current in the circuit is increasing, work is being done against the induced emf by storing energy in the magnetic field. If the current in the circuit tends to decrease, the stored energy of the field returns to the circuit, and thus adds to the energy being supplied by the source of emf. This tends to keep the current flowing even though the applied emf may be decreasing or be removed entirely.

The unit of inductance is the henry. Values of inductance used in radio equipment vary over a wide range. Inductance of several henrys is required in power-supply circuits (see chapter on Power Supplies) and to obtain such values of inductance it is necessary to use coils of many turns wound on iron cores. In radio-frequency circuits, the inductance values used will be measured in millihenrys (a mH, one one-thousandth of a henry) at low frequencies, and in microhenrys (μH, one one-millionth of a henry) at medium frequencies and higher. Although coils for radio frequencies may be wound on special iron cores (ordinary iron is not suitable) most rf coils made and used by amateurs are of the "air-core" type; that is, wound on an insulating support consisting of nonmagnetic material.

Every conductor has inductance, even though the conductor is not formed into a coil. The inductance of a short length of straight wire is small, but it may not be negligible because if the current through it changes its intensity rapidly enough the induced voltage may be appreciable. This will be the case in even a few inches of wire when an alternating current having a frequency of the order of 100 MHz. or higher is flowing. However, at much lower frequencies the inductance of the same wire could be ignored because the induced voltage would be negligibly small.

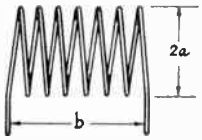

Fig. 2-12 – Coil dimensions used in the inductance formula. The wire diameter does not enter into the formula.

Calculating Inductance

The approximate inductance of single-layer air-core coils may be calculated from the simplified formula

$$L\ (\mu H) = \frac{a^2 n^2}{9a + 10b}$$

where L = Inductance in microhenrys
a = Coil radius in inches
b = Coil length in inches
n = Number of turns

The notation is explained in Fig. 2-12. This formula is a close approximation for coils having a length equal to or greater than $0.8a$

Example: Assume a coil having 48 turns wound 32 turns per inch and a diameter of 3/4 inch. Thus $a = 0.75 \div 2 = 0.375$, $b = 48 \div 32 = 1.5$, and $n = 48$. Substituting,

$$L = \frac{.375 \times .375 \times 48 \times 48}{(9 \times .375) + (10 \times 1.5)} = 17.6\ \mu H$$

To calculate the number of turns of a single-layer coil for a required value of inductance,

$$n = \sqrt{\frac{L\,(9a + 10b)}{a^2}}$$

Example: Suppose an inductance of 10 μH is required. The form on which the coil is to be wound has a diameter of one inch and is long enough to accommodate a coil of 1 1/4 inches. Then $a = 0.5$, $b = 1.25$, and $L = 10$. Substituting,

$$n = \sqrt{\frac{10\,(4.5 + 12.5)}{.5 \times .5}} = \sqrt{680} = 26.1 \text{ turns}$$

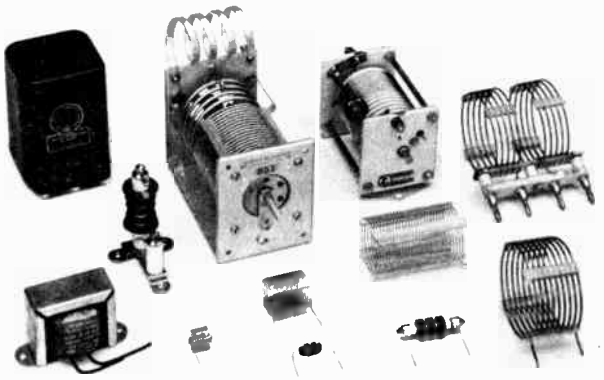

Inductors for power and radio frequencies. The two iron-core coils at the left are "chokes" for power-supply filters. The mounted air-core coils at the top center are adjustable inductors for transmitting tank circuits. The "pie-wound" coils at the left and in the foreground are radio-frequency choke coils. The remaining coils are typical of inductors used in rf tuned circuits, the larger sizes being used principally for transmitters.

A 26-turn coil would be close enough in practical work. Since the coil will be 1.25 inches long, the number of turns per inch will be 26.1 ÷ 1.25 =20.8. Consulting the wire table, we find that No. 17 enameled wire (or anything smaller) can be used. The proper inductance is obtained by winding the required number of turns on the form and then adjusting the spacing between the turns to make a uniformly-spaced coil 1.25 inches long.

Inductance Charts

Most inductance formulas lose accuracy when applied to small coils (such as are used in vhf work and in low-pass filters built for reducing harmonic interference to television) because the conductor thickness is no longer negligible in comparison with the size of the coil. Fig. 2-13 shows the measured inductance of vhf coils, and may be used as a basis for circuit design. Two curves are given: curve A is for coils wound to an inside diameter of 1/2 inch; curve B is for coils of 3/4-inch inside diameter. In both curves the wire size is No. 12, winding pitch 8 turns to the inch (1/8 inch center-to-center turn spacing). The inductance values given include leads 1/2 inch long.

The charts of Figs. 2-14 and 2-15 are useful for rapid determination of the inductance of coils of the type commonly used in radio-frequency circuits in the range 3-30 MHz. They are of sufficient accuracy for most practical work. Given the coil length in inches, the curves show the multiplying factor to be applied to the inductance value given in the table below the curve for a coil of the same diameter and number of turns per inch.

Example: A coil 1 inch in diameter is 1 1/4 inches long and has 20 turns. Therefore it has 16 turns per inch, and from the table under Fig. 2-15 it is found that the reference inductance for a coil of this diameter and number of turns per inch is 16.8 μH. From curve B in the figure the multiplying factor is 0.35, so the inductance is

$$16.8 \times 0.35 = 5.9\ \mu H$$

The charts also can be used for finding suitable dimensions for a coil having a required value of inductance.

Example: A coil having an inductance of 12 μH is required. It is to be wound on a form having a diameter of 1 inch, the length available for the winding being not more than 1 1/4 inches. From Fig. 2-15, the multiplying factor for a 1-inch diameter coil (curve B) having the maximum possible length of 1 1/4 inches is 0.35. Hence the number of turns per inch must be chosen for a reference inductance of at least 12/0.35, or 34 μH. From the Table under Fig. 2-15 it is seen that 16 turns per inch (reference inductance 16.8 μH) is too small. Using 32 turns per inch, the multiplying factor is 12/68, or 0.177, and from curve B this corresponds to a coil length of 3/4 inch. There will be 24 turns in this length, since the winding "pitch" is 32 turns per inch.

Machine-wound coils with the diameters and turns per inch given in the tables are available in many radio stores, under the trade names of "B&W Miniductor" and "Illumitronic Air Dux."

IRON-CORE COILS

Permeability

Suppose that the coil in Fig. 2-16 is wound on an iron core having a cross-sectional area of 2 square inches. When a certain current is sent through the coil it is found that there are 80,000 lines of force in the core. Since the area is 2 square inches, the flux density is 40,000 lines per square inch. Now suppose that the iron core is removed and the same current is maintained in the coil, and that the flux density without the iron core is found to be 50 lines per square inch. The ratio of the flux density with the given core material to the flux density (with the same coil and same current) with an air core is called the permeability of the material. In this case the permeability of the iron is 40,000/50 = 800. The inductance of the coil is increased 800 times by inserting the iron core since, other things being equal, the inductance will be proportional to the magnetic flux through the coil.

The permeability of a magnetic material varies with the flux density. At low flux densities (or with an air core) increasing the current through the coil will cause a proportionate increase in flux, but at very high flux densities, increasing the current may cause no appreciable change in the flux. When this is so, the iron is said to be saturated. Saturation causes a rapid decrease in permeability, because it decreases the ratio of flux lines to those obtainable with the same current and an air core. Obviously, the inductance of an iron-core inductor is highly dependent upon the current flowing in the coil. In an air-core coil, the inductance is independent of current because air does not saturate.

Iron core coils such as the one sketched in Fig. 2-16 are used chiefly in power-supply equipment. They usually have direct current flowing through the winding, and the variation in inductance with current is usually undesirable. It may be overcome by keeping the flux density below the saturation point of the iron. This is done by opening the core so that there is a small "air gap," as indicated by the dashed lines. The magnetic "resistance" introduced by such a gap is so large – even though the gap is only a small fraction of an inch – compared with that of the iron that the gap, rather than the iron, controls the flux density. This reduces the inductance, but makes it practically constant regardless of the value of the current.

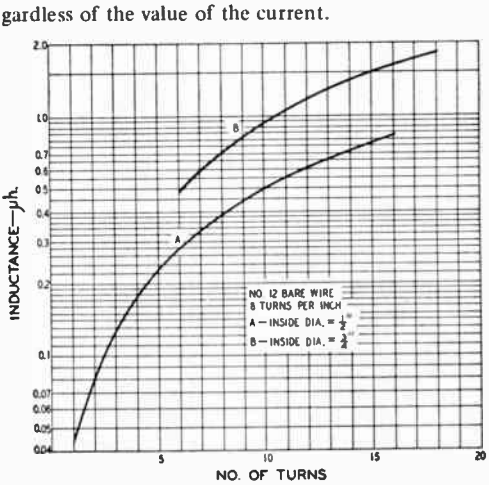

Fig. 2-13 – Measured inductance of coils wound with No. 12 bare wire, 8 turns to the inch. The values include half-inch leads.

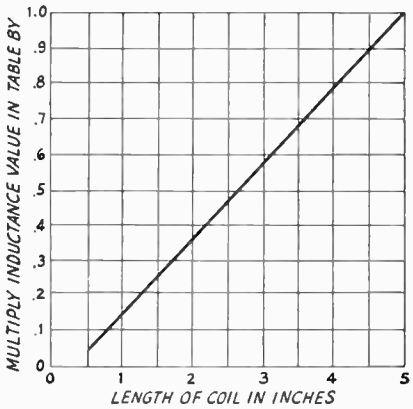

Fig. 2-14 — Factor to be applied to the inductance of coils listed in the table below, for coil lengths up to 5 inches.

Eddy Currents and Hysteresis

When alternating current flows through a coil wound on an iron core an emf will be induced, as previously explained, and since iron is a conductor a current will flow in the core. Such currents (called eddy currents) represent a waste of power because they flow through the resistance of the iron and thus cause heating. Eddy-current losses can be reduced by laminating the core; that is, by cutting it into thin strips. These strips or laminations must be insulated from each other by painting them with some insulating material such as varnish or shellac.

There is also another type of energy loss: the iron tends to resist any change in its magnetic state, so a rapidly-changing current such as ac is forced continually to supply energy to the iron to overcome this "inertia." Losses of this sort are called hysteresis losses.

Coil dia, Inches	*No. of tpi*	*Inductance in μH*
1 1/4	4	2.75
	6	6.3
	8	11.2
	10	17.5
	16	42.5
1 1/2	4	3.9
	6	8.8
	8	15.6
	10	24.5
	16	63
1 3/4	4	5.2
	6	11.8
	8	21
	10	33
	16	85
2	4	6.6
	6	15
	8	26.5
	10	42
	16	108
2 1/2	4	10.2
	6	23
	8	41
	10	64
3	4	14
	6	31.5
	8	56
	10	89

Eddy-current and hysteresis losses in iron increase rapidly as the frequency of the alternating current is increased. For this reason, ordinary iron cores can be used only at power and audio frequencies — up to, say, 15,000 cycles. Even so, a very good grade of iron or steel is necessary if the core is to perform well at the higher audio frequencies. Iron cores of this type are completely useless at radio frequencies.

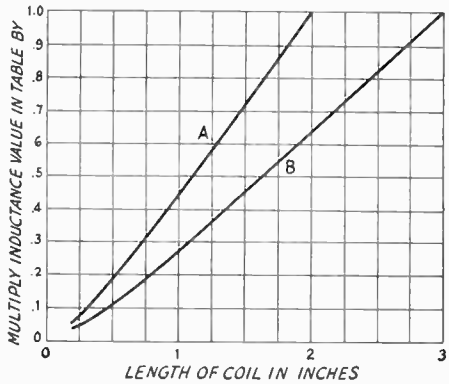

Fig. 2-15 — Factor to be applied to the inductance of coils listed in the table below, as a function of coil length. Use curve A for coils marked *A*, and curve B for coils marked *B*.

Coil dia, Inches	*No. of tpi*	*Inductance in μH*
1/2 (A)	4	0.18
	6	0.40
	8	0.72
	10	1.12
	16	2.9
	32	12
5/8 (A)	4	0.28
	6	0.62
	8	1.1
	10	1.7
	16	4.4
	32	18
3/4 (B)	4	0.6
	6	1.35
	8	2.4
	10	3.8
	16	9.9
	32	40
1 (B)	4	1.0
	6	2.3
	8	4.2
	10	6.6
	16	16.9
	32	68

For radio-frequency work, the losses in iron cores can be reduced to a satisfactory figure by grinding the iron into a powder and then mixing it with a "binder" of insulating material in such a way that the individual iron particles are insulated from each other. By this means cores can be made that will function satisfactorily even through the vhf range — that is, at frequencies up to perhaps 100 MHz. Because a large part of the magnetic path is through a nonmagnetic material, the permeability of the iron is low compared with the values

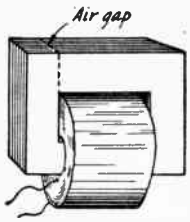

Fig. 2-16 — Typical construction of an iron-core inductor. The small air gap prevents magnetic saturation of the iron and thus maintains the inductance at high currents.

obtained at power-supply frequencies. The core is usually in the form of a "slug" or cylinder which fits inside the insulating form on which the coil is wound. Despite the fact that, with this construction, the major portion of the magnetic path for the flux is in air, the slug is quite effective in increasing the coil inductance. By pushing the slug in and out of the coil the inductance can be varied over a considerable range.

INDUCTANCES IN SERIES AND PARALLEL

When two or more inductors are connected in series (Fig. 2-17, left) the total inductance is equal to the sum of the individual inductances, *provided the coils are sufficiently separated so that no coil is in the magnetic field of another.*

That is,

$L_{total} = L1 + L2 + L3 + L4 + \ldots\ldots\ldots\ldots$

If inductors are connected in parallel (Fig. 2-17, right) – and the coils are separated sufficiently, the total inductance is given by

$$L_{total} = \frac{1}{\frac{1}{L1} + \frac{1}{L2} + \frac{1}{L3} + \frac{1}{L4} + \ldots\ldots}$$

and for two inductances in parallel,

$$L = \frac{L1L2}{L1 + L2}$$

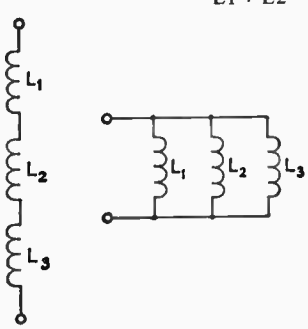

Fig. 2-17 — Inductances in series and parallel.

Thus the rules for combining inductances in series and parallel are the same for resistances, *if* the coils are far enough apart so that each is unaffected by another's magnetic field. When this is not so the formulas given above cannot be used.

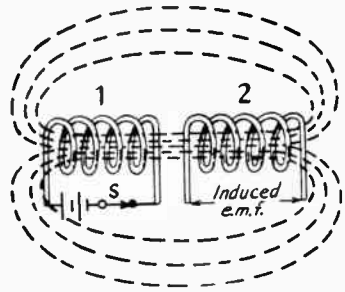

Fig. 2-18 — Mutual inductance. When the switch, *S*, is closed current flows through coil No. 1, setting up a magnetic field that induces an emf in the turns of coil No. 2.

MUTUAL INDUCTANCE

If two coils are arranged with their axes on the same line, as shown in Fig. 2-18, a current sent through Coil 1 will cause a magnetic field which "cuts" Coil 2. Consequently, an emf will be induced in Coil 2 whenever the field strength is changing. This induced emf is similar to the emf of self-induction, but since it appears in the *second* coil because of current flowing in the *first*, it is a "mutual" effect and results from the mutual inductance between the two coils.

If all the flux set up by one coil cuts all the turns of the other coil the mutual inductance has its maximum possible value. If only a small part of the flux set up by one coil cuts the turns of the other the mutual inductance is relatively small. Two coils having mutual inductance are said to be coupled.

The ratio of actual mutual inductance to the maximum possible value that could theoretically be obtained with two given coils is called the coefficient of coupling between the coils. It is frequently expressed as a percentage. Coils that have nearly the maximum possible (coefficient = 1 or 100%) mutual inductance are said to be closely, or tightly, coupled, but if the mutual inductance is relatively small the coils are said to be loosely coupled. The degree of coupling depends upon the physical spacing between the coils and how they are placed with respect to each other. Maximum coupling exists when they have a common axis and are as close together as possible (one wound over the other). The coupling is least when the coils are far apart or are placed so their axes are at right angles.

The maximum possible coefficient of coupling is closely approached only when the two coils are wound on a closed iron core. The coefficient with air-core coils may run as high as 0.6 or 0.7 if one coil is wound over the other, but will be much less if the two coils are separated.

TIME CONSTANT

Capacitance and Resistance

Connecting a source of emf to a capacitor causes the capacitor to become charged to the full emf practically instantaneously, if there is no resistance in the circuit. However, if the circuit contains resistance, as in Fig. 2-19A, the resistance limits the current flow and an appreciable length of time is required for the emf between the capacitor

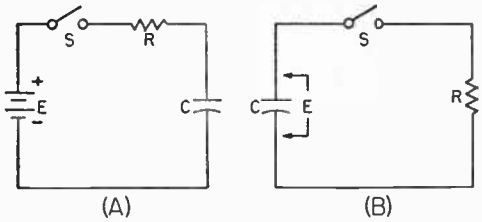

Fig. 2-19 — Illustrating the time constant of an *RC* circuit.

plates to build up to the same value as the emf of the source. During this "building-up" period the current gradually decreases from its initial value, because the increasing emf stored on the capacitor offers increasing opposition to the steady emf of the source.

Theoretically, the charging process is never really finished, but eventually the charging current drops to a value that is smaller than anything that can be measured. The time constant of such a circuit is the length of time, in seconds, required for the voltage across the capacitor to reach 63 per cent of the applied emf (this figure is chosen for mathematical reasons). The voltage across the capacitor rises with time as shown by Fig. 2-20.

The formula for time constant is

$$T = RC$$

where T = Time constant in seconds
C = Capacitance in farads
R = Resistance in ohms

Example: The time constant of a 2-μF capacitor and a 250,000-ohm (0.25 megohm) resistor is

$$T = RC = 0.25 \times 2 = 0.5 \text{ second}$$

If the applied emf is 1000 volts, the voltage between the capacitor plates will be 630 volts at the end of 1/2 second.

If C is in microfarads and R in megohms, the time constant also is in seconds. These units usually are more convenient.

If a charged capacitor is *discharged* through a resistor, as indicated in Fig. 2-19B, the same time constant applies. If there were no resistance, the capacitor would discharge instantly when S was closed. However, since R limits the current flow the capacitor voltage cannot instantly go to zero, but it will decrease just as rapidly as the capacitor can rid itself of its charge through R. When the capacitor is discharging through a resistance, the time constant (calculated in the same way as above) is the time, in seconds, that it takes for the capacitor to *lose* 63 percent of its voltage; that is, for the voltage to drop to 37 percent of its initial value.

Example: If the capacitor of the example above is charged to 1000 volts, it will discharge to 370 volts in 1/2 second through the 250,000-ohm resistor.

Inductance and Resistance

A comparable situation exists when resistance and inductance are in series. In Fig. 2-21, first consider L to have no resistance and also assume that R is zero. Then closing S would tend to send a current through the circuit. However, the instantaneous transition from no current to a finite value,

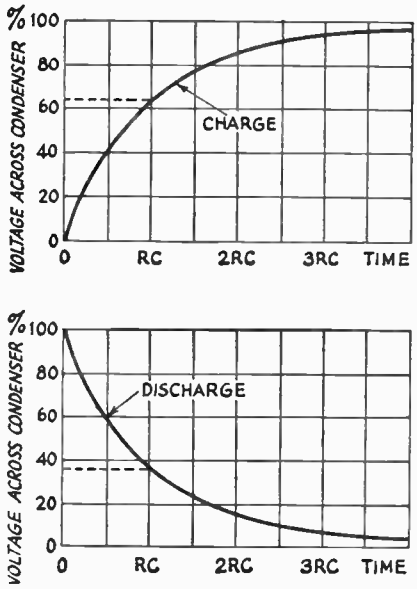

Fig. 2-20 — How the voltage across a capacitor rises, with time, when charged through a resistor. The lower curve shows the way in which the voltage decreases across the capacitor terminals on discharging through the same resistor.

however small, represents a very rapid *change* in current, and a *back emf* is developed by the self-inductance of L that is practically equal and opposite to the applied emf. The result is that the initial current is very small.

The back emf depends upon the *change* in current and would cease to offer opposition if the current did not continue to increase. With no resistance in the circuit (which would lead to an infinitely large current, by Ohm's Law) the current would increase forever, always growing just fast enough to keep the emf of self-induction equal to the applied emf.

When resistance is in series, Ohm's Law sets a limit to the value that the current can reach. The back emf generated in L has only to equal the *difference* between E and the drop across R, because that difference is the voltage actually applied to L. This difference becomes smaller as the current approaches the final Ohm's Law value. Theoretically, the back emf never quite disappears and so the current never quite reaches the Ohm's Law value, but practically the differences becomes unmeasurable after a time. The time constant of an

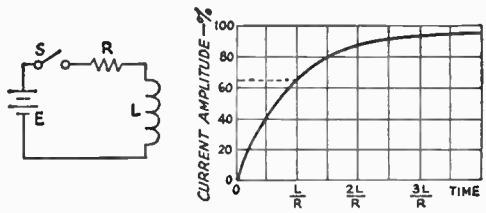

Fig. 2-21 — Time constant of an *LR* circuit.

inductive circuit is the time in seconds required for the current to reach 63 percent of its final value. The formula is

$$T = \frac{L}{R}$$

where T = Time constant in seconds
L = Inductance in Henrys
R = Resistance in ohms

The resistance of the wire in a coil acts as if it were in series with the inductance.

Example: A coil having an inductance of 20 henrys and a resistance of 100 ohms has a time constant of

$$T = \frac{L}{R} = \frac{20}{100} = 0.2 \text{ second}$$

if there is no other resistance in the circuit. If a dc emf of 10 volts is applied to such a coil, the final current, by Ohm's Law, is

$$I = \frac{E}{R} = \frac{10}{100} = 0.1 \text{ amp. or } 100 \text{ mA}$$

The current would rise from zero to 63 milliamperes in 0.2 second after closing the switch.

An inductor cannot be "discharged" in the same way as a capacitor, because the magnetic field disappears as soon as current flow ceases. Opening S does not leave the inductor "charged." The energy stored in the magnetic field instantly returns to the circuit when S is opened. The rapid disappearance of the field causes a very large voltage to be induced in the coil – ordinarily many times larger than the voltage applied, because the induced voltage is proportional to the *speed* with which the field changes. The common result of opening the switch in a circuit such as the one shown is that a spark or arc forms at the switch contacts at the instant of opening. If the inductance is large and the current in the circuit is high, a great deal of energy is released in a very short period of time. It is not at all unusual for the switch contacts to burn or melt under such circumstances. The spark or arc at the opened switch can be reduced or suppressed by connecting a suitable capacitor and resistor in series across the contacts.

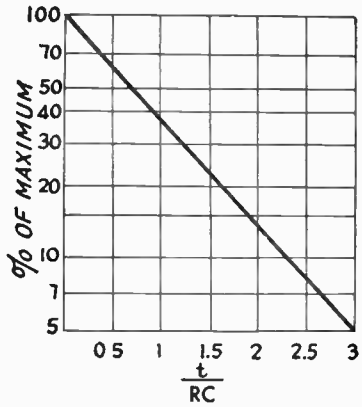

Fig. 2-22 – Voltage across capacitor terminals in a discharging RC circuit, in terms of the initial charged voltage. To obtain time in seconds, multiply the factor t/RC by the time constant of the circuit.

Time constants play an important part in numerous devices, such as electronic keys, timing and control circuits, and shaping of keying characteristics by vacuum tubes. The time constants of circuits are also important in such applications as automatic gain control and noise limiters. In nearly all such applications a resistance-capacitance (RC) time constant is involved, and it is usually necessary to know the voltage across the capacitor at some time interval larger or smaller than the actual time constant of the circuit as given by the formula above. Fig. 2-22 can be used for the solution of such problems, since the curve gives the voltage across the capacitor, in terms of percentage of the initial charge, for percentages between 5 and 100, at any time after discharge begins.

Example: A 0.01-μF capacitor is charged to 150 volts and then allowed to discharge through a 0.1-megohm resistor. How long will it take the voltage to fall to 10 volts? In percentage, 10/150 = 6.7%. From the chart, the factor corresponding to 6.7% is 2.7. The time constant of the circuit is equal to $RC = 0.1 \times .01 = .001$. The time is therefore $2.7 \times 0.001 = .0027$ second, or 2.7 milliseconds.

ALTERNATING CURRENTS

PHASE

The term phase essentially means "time," or the *time interval* between the instant when one thing occurs and the instant when a second related thing takes place. The later event is said to *lag* the earlier, while the one that occurs first is said to *lead*. In ac circuits the current amplitude changes continuously, so the concept of phase or time becomes important. Phase can be measured in the ordinary time units, such as the second, but there is a more convenient method: Since each ac cycle occupies exactly the same amount of time as every other cycle of the same frequency, we can use the cycle itself as the time unit. Using the cycle as the time unit makes the specification or measurement of phase independent of the frequency of the current, so long as only one frequency is under consideration at a time. When two or more frequencies are to be considered, as in the case where harmonics are present, the phase measurements are made with respect to the lowest, or fundamental, frequency.

The time interval or "phase difference" under consideration usually will be less than one cycle. Phase difference could be measured in decimal parts of a cycle, but it is more convenient to divide the cycle into 360 parts or degrees. A phase degree is therefore 1/360 of a cycle. The reason for this choice is that with sine-wave alternating current the value of the current at any instant is proportional to the sine of the angle that corresponds to the number of degrees – that is, length of time – from the instant the cycle began. There is no actual "angle" associated with an alternating current. Fig. 2-23 should help make this method of measurement clear.

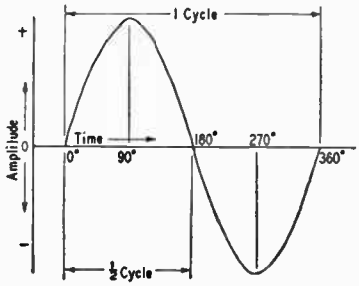

Fig. 2-23 — An ac cycle is divided off into 360 degrees that are used as a measure of time or phase.

Measuring Phase

The phase difference between two currents of the same frequency is the time or angle difference between corresponding parts of cycles of the two currents. This is shown in Fig. 2-24. The current labeled *A* leads the one marked *B* by 45 degrees, since *A*'s cycles begin 45 degrees earlier in time. It is equally correct to say that *B lags A* by 45 degrees.

Two important special cases are shown in Fig. 2-25. In the upper drawing *B* lags 90 degrees behind *A*; that is, its cycle begins just one-quarter cycle later than that of *A*. When one wave is passing through zero, the other is just at its maximum point.

In the lower drawing *A* and *B* are 180 degrees out of phase. In this case it does not matter which one is considered to lead or lag. *B* is always positive while *A* is negative, and vice versa. The two waves are thus *completely* out of phase.

The waves shown in Figs. 2-24 and 2-25 could represent current, voltage, or both. *A* and *B* might be two currents in separate circuits, or *A* might represent voltage and *B* current in the same circuit. If *A* and *B* represent two currents in the *same* circuit (or two voltages in the same circuit) the total or resultant current (or voltage) also is a sine wave, because adding any number of sine waves of the same frequency always gives a sine wave also of the same frequency.

Phase in Resistive Circuits

When an alternating voltage is applied to a resistance, the current flows exactly in step with the voltage. In other words, the voltage and current are in phase. This is true at any frequency if the

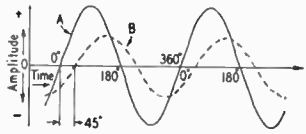

Fig. 2-24 — When two waves of the same frequency start their cycles at slightly different times, the time difference or phase difference is measured in degrees. In this drawing wave *B* starts 45 degrees (one-eighth cycle) later than wave *A*, and so lags 45 degrees behind *A*.

resistance is "pure" — that is, is free from the reactive effects discussed in the next section. Practically, it is often difficult to obtain a purely resistive circuit at radio frequencies, because the reactive effects become more pronounced as the frequency is increased.

In a purely resistive circuit, or for purely resistive parts of circuits, Ohm's Law is just as valid for ac of any frequency as it is for dc.

REACTANCE

Alternating Current in Capacitance

In Fig. 2-26 a sine-wave ac voltage having a maximum value of 100 volts is applied to a capacitor. In the period *OA*, the applied voltage increases from zero to 38 volts; at the end of this period the capacitor is charged to that voltage. In interval *AB* the voltage increases to 71 volts; that is, 33 volts additional. In this interval a *smaller* quantity of charge has been added than in *OA*, because the voltage rise during interval *AB* is smaller. Consequently the average current during

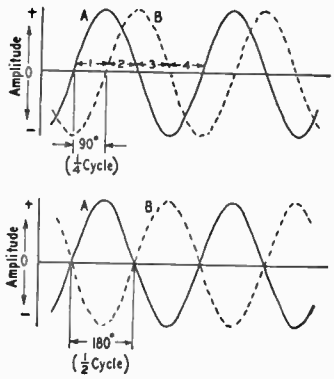

Fig. 2-25 — Two important special cases of phase difference. In the upper drawing, the phase difference between *A* and *B* is 90 degrees; in the lower drawing the phase difference is 180 degrees.

AB is smaller than during *OA*. In the third interval, *BC*, the voltage rises from 71 to 92 volts, an increase of 21 volts. This is less than the voltage increase during *AB*, so the quantity of electricity added is less; in other words, the average current during interval *BC* is still smaller. In the fourth interval, *CB*, the voltage increases only 8 volts; the charge added is smaller than in any preceding interval and therefore the current also is smaller.

By dividing the first quarter cycle into a very large number of intervals it could be shown that the current charging the capacitor has the shape of a sine wave, just as the applied voltage does. The current is largest at the beginning of the cycle and becomes zero at the maximum value of the voltage, so there is a phase difference of 90 degrees between the voltage and current. During the first quarter cycle the current is flowing in the normal direction through the circuit, since the capacitor is being charged. Hence the current is positive, as indicated by the dashed line in Fig. 2-26.

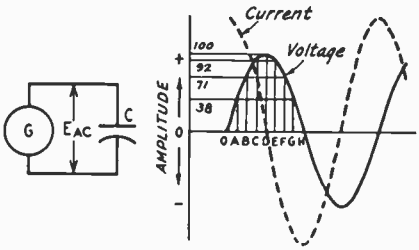

Fig. 2-26 — Voltage and current phase relationships when an alternating voltage is applied to a capacitor.

In the second quarter cycle – that is, in the time from *D* to *H*, the voltage applied to the capacitor decreases. During this time the capacitor *loses* its charge. Applying the same reasoning, it is plain that the current is small in interval *DE* and continues to increase during each succeeding interval. However, the current is flowing *against* the applied voltage because the capacitor is discharging into the circuit. The current flows in the *negative* direction during this quarter cycle.

The third and fourth quarter cycles repeat the events of the first and second, respectively, with this difference – the polarity of the applied voltage has reversed, and the current changes to correspond. In other words, an alternating current flows in the circuit because of the alternate charging and discharging of the capacitance. As shown by Fig. 2-26, the current starts its cycle 90 degrees before the voltage, so the current in a capacitor leads the applied voltage by 90 degrees.

Capacitive Reactance

The quantity of electric charge that can be placed on a capacitor is proportional to the applied emf and the capacitance. This amount of charge moves back and forth in the circuit once each cycle, and so the *rate* of movement of charge – that is, the current – is proportional to voltage, capacitance and frequency. If the effects of capacitance and frequency are lumped together, they form a quantity that plays a part similar to that of resistance in Ohm's Law. This quantity is called reactance, and the unit for it is the ohm, just as in the case of resistance. The formula for it is

$$X_L = 2\pi fL$$

where X_L = Inductive reactance in ohms
f = Frequency in cycles per second
L = Inductance in henrys
π = 3.14

Although the unit of reactance is the ohm, there is no power dissipation in reactance. The energy stored in the capacitor in one quarter of the cycle is simply returned to the circuit in the next.

The fundamental units (cycles per second, farads) are too large for practical use in radio circuits. However, if the capacitance is in microfarads and the frequency is in megacycles, the reactance will come out in ohms in the formula.

Example: The reactance of a capacitor of 470 pF (0.00047 μF) at a frequency of 7150 kHz (7.15 MHz) is

$$X = \frac{1}{2\pi fC} = \frac{1}{6.28 \times 7.15 \times .00047} = 47.4 \text{ ohms}$$

Inductive Reactance

When an alternating voltage is applied to a *pure* inductance (one with no resistance – all *practical* inductors have resistance) the current is again 90 degrees out of phase with the applied voltage. However, in this case the current *lags* 90 degrees behind the voltage – the opposite of the capacitor current-voltage relationship.

The primary cause for this is the *back emf* generated in the inductance, and since the amplitude of the back emf is proportional to the rate at which the current changes, and this in turn is proportional to the frequency, the amplitude of the current is inversely proportional to the applied frequency. Also, since the back emf is proportional to inductance for a given rate of current change, the current flow is inversely proportional to inductance for a given applied voltage and frequency. (Another way of saying this is that just enough current flows to generate an induced emf that equals and opposes the applied voltage.)

The combined effect of inductance and frequency is called inductive reactance, also expressed in ohms, and the formula for it is

$$X_C = \frac{1}{2\pi fC}$$

where X_C = Capacitive reactance in ohms
f = Frequency in cycles per second
C = Capacitance in farads
π = 3.14

Example: The reactance of a 15-microhenry coil at a frequency of 14 MHz is

$$X_L = 2\pi fL = 6.28 \times 14 \times 15 = 1319 \text{ ohms}$$

In radio-frequency circuits the inductance values usually are small and the frequencies are large. If the inductance is expressed in millihenrys and the frequency in kilocycles, the conversion factors for the two units cancel, and the formula for reactance may be used without first converting to fundamental units. Similarly, no conversion is necessary if the inductance is in microhenrys and the frequency is in megacycles.

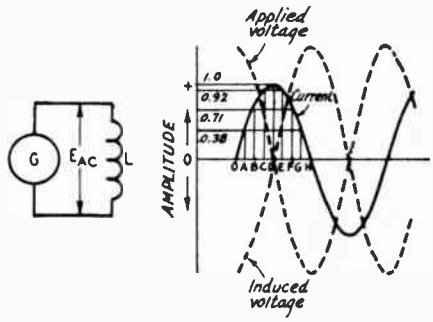

Fig. 2-27 — Phase relationships between voltage and current when an alternating voltage is applied to an inductance.

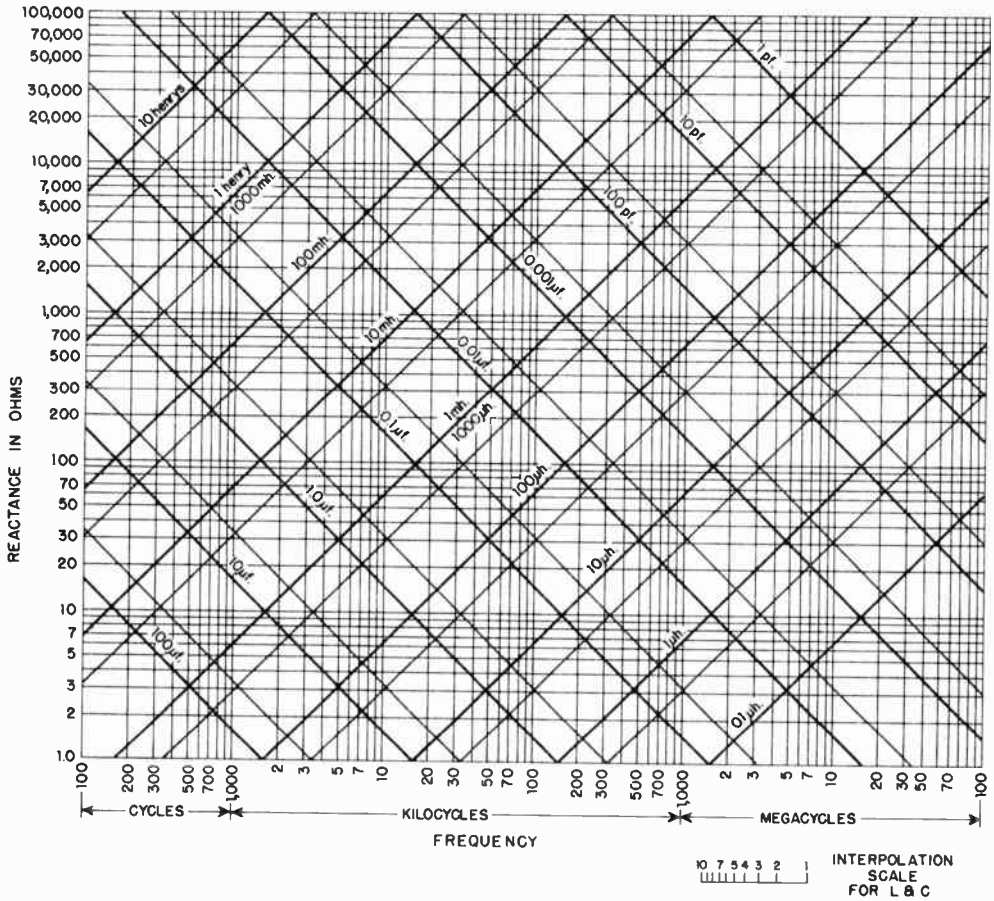

Fig. 2-28 — Inductive and capacitive reactance vs. frequency. Heavy lines represent multiples of 10, intermediate light lines multiples of 5; e.g., the light line between 10 µH and 100 µH, the light line between 0.1 µF and 1 µF represents 0.5 µF, etc. Intermediate values can be estimated with the help of the interpolation scale.

Reactances outside the range of the chart may be found by applying appropriate factors to values within the chart range. For example, the reactance of 10 henrys at 60 cycles can be found by taking the reactance to 10 henrys at 600 cycles and dividing by 10 for the 10-times decrease in frequency.

Example: The reactance of a coil having an inductance of 8 henrys, at a frequency of 120 cycles, is

$$X_L = 2\pi fL = 6.28 \times 120 \times 8 = 6029 \text{ ohms}$$

The resistance of the wire of which the coil is wound has no effect on the reactance, but simply acts as though it were a separate resistor connected in series with the coil.

Ohm's Law for Reactance

Ohm's Law for an ac circuit containing *only* reactance is

$$I = \frac{E}{X}$$

$$E = IX$$

$$X = \frac{E}{I}$$

where E = Emf in volts
I = Current in amperes
X = Reactance in ohms

The reactance in the circuit may, of course, be either inductive or capacitive.

Example: If a current of 2 amperes is flowing through the capacitor of the earlier example (reactance = 47.4 ohms) at 7150 kHz, the voltage drop across the capacitor is

$$E = IX = 2 \times 47.4 = 94.8 \text{ volts}$$

If 400 volts at 120 hertz is applied to the 8-henry inductor of the earlier example, the current through the coil will be

$$I = \frac{E}{X} = \frac{420}{6029} = 0.0663 \text{ amp. (66.3 mA)}$$

Reactance Chart

The accompanying chart, Fig. 2-28, shows the reactance of capacitances from 1 pF to 100 µF, and the reactance of inductances from 0.1 µH to 10 henrys, for frequencies between 100 hertz and 100 megahertz per second. The approximate value

of reactance can be read from the chart or, where more exact values are needed, the chart will serve as a check on the order of magnitude of reactances calculated from the formulas given above, and thus avoid "decimal-point errors."

Reactances in Series and Parallel

When reactances of the same kind are connected in series or parallel the resultant reactance is that of the resultant inductance or capacitance. This leads to the same rules that are used when determining the resultant resistance when resistors are combined. That is, for series reactances of the same kind the resultant reactance is

$$X = X1 + X2 + X3 + X4$$

and for reactances of the same kind in parallel the resultant is

$$X = \frac{1}{\frac{1}{X1} + \frac{1}{X2} + \frac{1}{X3} + \frac{1}{X4}}$$

or for two in parallel,

$$X = \frac{X1X2}{X1 + X2}$$

The situation is different when reactances of opposite kinds are combined. Since the current in a capacitance leads the applied voltage by 90 degrees and the current in an inductance lags the applied voltage by 90 degrees, the voltages at the terminals of opposite types of reactance are 180 degrees out of phase in a series circuit (in which the current has to be the same through all elements), and the currents in reactances of opposite types are 180 degrees out of phase in a parallel circuit (in which the same voltage is applied to all elements). The 180-degree phase relationship means that the currents or voltages are of opposite polarity, so in the series circuit of Fig. 2-29A the voltage EL across the inductive reactance XL is of opposite polarity to the voltage EC across the capacitive reactance XC. Thus if we call XL "positive" and XC "negative" (a common convention) the applied voltage EAC is $EL - EC$. In the parallel circuit at B the total current, I, is equal to $IL - IC$, since the currents are 180 degrees out of phase.

In the series case, therefore, the resultant reactance of XL and XC is

$$X = X_L - X_C$$

and in the parallel case

$$X = \frac{-X_L X_C}{X_L - X_C}$$

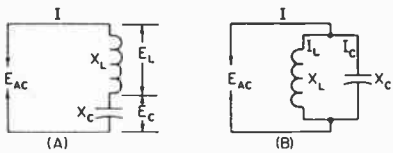

Fig. 2-29 — Series and parallel circuits containing opposite kinds of reactance.

Note that in the series circuit the total reactance is negative if XC is larger than XL; this indicates that the total reactance is capacitive in such a case. The resultant reactance in a series circuit is always smaller than the larger of the two individual reactances.

In the parallel circuit, the resultant reactance is negative (i.e., capacitive) if XL is larger than XC, and positive (inductive) if XL is smaller than XC, but in every case is always larger than the smaller of the two individual reactances.

In the special case where $XL = XC$ the total reactance is zero in the series circuit and infinitely large in the parallel circuit.

Reactive Power

In Fig. 2-29A the voltage drop across the inductor is larger than the voltage applied to the circuit. This might seem to be an impossible condition, but it is not; the explanation is that while energy is being stored in the inductor's magnetic field, energy is being returned to the circuit from the capacitor's electric field, and vice versa. This stored energy is responsible for the fact that the voltages across reactances in series can be larger than the voltage applied to them.

In a resistance the flow of current causes heating and a power loss equal to I^2R. The power in a reactance is equal to I^2X, but is not a "loss"; it is simply power that is transferred back and forth between the field and the circuit but not used up in heating anything. To distinguish this "nondissipated" power from the power which is actually consumed, the unit of reactive power is called the volt-ampere-reactive, or var, instead of the watt. Reactive power is sometimes called "wattless" power.

IMPEDANCE

When a circuit contains both resistance and reactance the combined effect of the two is called impedance, symbolized by the letter Z. (Impedance is thus a more general term than either resistance or reactance, and is frequently used even for circuits that have only resistance or reactance, although usually with a qualification – such as "resistive impedance" to indicate that the circuit has only resistance, for example.)

The reactance and resistance comprising an impedance may be connected either in series or in parallel, as shown in Fig. 2-30. In these circuits the reactance is shown as a box to indicate that it may be either inductive or capacitive. In the series circuit the current is the same in both elements, with (generally) different voltages appearing across the resistance and reactance. In the parallel circuit the same voltage is applied to both elements, but different currents flow in the two branches.

Since in a resistance the current is in phase with the applied voltage while in a reactance it is 90 degrees out of phase with the voltage, the phase relationship between current and voltage in the circuit as a whole may be anything between zero and 90 degrees, depending on the relative amounts of resistance and reactance.

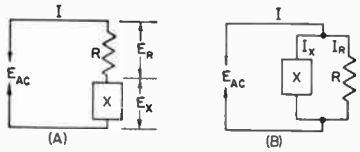

Fig. 2-30 — Series and parallel circuits containing resistance and reactance.

Series Circuits

When resistance and reactance are in series, the impedance of the circuit is

$$Z = \sqrt{R^2 + X^2}$$

where Z = Impedance in ohms
R = Resistance in ohms
X = Reactance in ohms

The reactance may be either capacitive or inductive. If there are two or more reactances in the circuit they may be combined into a resultant by the rules previously given, before substitution into the formula above; similarly for resistances.

The "square root of the sum of the squares" rule for finding impedance in a series circuit arises from the fact that the voltage drops across the resistance and reactance are 90 degrees out of phase, and so combine by the same rule that applies in finding the hypothenuse of a right-angled triangle when the base and altitude are known.

Parallel Circuits

With resistance and reactance in parallel, as in Fig. 2-30B, the impedance is

$$Z = \frac{RX}{\sqrt{R^2 + X^2}}$$

where the symbols have the same meaning as for series circuits.

Just as in the case of series circuits, a number of reactances in parallel should be combined to find the resultant reactance before substitution into the formal above; similarly for a number of resistances in parallel.

Equivalent Series and Parallel Circuits

The two circuits shown in Fig. 2-30 are equivalent if the same current flows when a given voltage of the same frequency is applied, and if the phase angle between voltage and current is the same in both cases. It is in fact possible to "transform" any given series circuit into an equivalent parallel circuit, and vice versa.

Transformations of this type often lead to simplification in the solution of complicated circuits. However, from the standpoint of practical work the usefulness of such transformations lies in the fact that the impedance of a circuit may be modified by the addition of *either* series or parallel elements, depending on which happens to be most convenient in the particular case. Typical applications are considered later in connection with tuned circuits and transmission lines.

Ohm's Law for Impedance

Ohm's Law can be applied to circuits containing impedance just as readily as to circuits having resistance or reactance only. The formulas are

$$I = \frac{E}{Z}$$

$$E = IZ$$

$$Z = \frac{E}{I}$$

where E = Emf in volts
I = Current in amperes
Z = Impedance in ohms

Fig. 2-31 shows a simple circuit consisting of a resistance of 75 ohms and a reactance of 100 ohms in series. From the formula previously given, the impedance is

$$Z = \sqrt{R^2 + X_L^2} = \sqrt{(75)^2 + (100)^2} = 125$$

If the applied voltage is 250 volts, then

$$I = \frac{E}{Z} = \frac{250}{125} = 2 \text{ amperes}$$

This current flows through both the resistance and reactance, so the voltage drops are

$$E_R = IR = 2 \times 75 = 150 \text{ volts}$$
$$E_{XL} = IX_L = 2 \times 100 = 200 \text{ volts}$$

The simple arithmetical sum of these two drops, 350 volts, is greater than the applied voltage because the two voltages are 90 degrees out of phase. Their actual resultant, when phase is taken into account, is

$$\sqrt{(150)^2 + (200)^2} = 250 \text{ volts}$$

Power Factor

In the circuit of Fig. 2-31 an applied emf of 250 volts results in a current of 2 amperes, giving an apparent power of 250 X 2 = 500 watts. However, only the resistance actually consumes power. The power in the resistance is

$$P = I^2R = (2)^2 \times 75 = 300 \text{ watts}$$

The ratio of the power consumed to the apparent power is called the power factor of the circuit, and in this example the power factor would be 300/500 = 0.6. Power factor is frequently expressed as a percentage; in this case, it would be 60 percent.

"Real" or dissipated power is measured in watts; apparent power, to distinguish it from real power, is measured in volt-amperes. It is simply the product of volts and amperes and has no direct relationship to the power actually used up or dissipated unless the power factor of the circuit is known. The power factor of a purely resistive circuit is 100 percent or 1, while the power factor of a pure reactance is zero. In this illustration, the reactive power is $VAR = I2X$ = (2)2 X 100 = 400 volt-amperes.

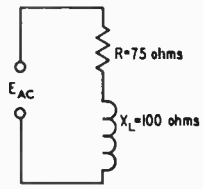

Fig. 2-31 — Circuit used as an example for impedance calculations.

Reactance and Complex Waves

It was pointed out earlier in this chapter that a complex wave (a "nonsinusoidal" wave) can be resolved into a fundamental frequency and a series of harmonic frequencies. When such a complex voltage wave is applied to a circuit containing reactance, the current through the circuit will not have the same wave shape as the applied voltage. This is because the reactance of an inductor and capacitor depend upon the applied frequency. For the second-harmonic component of a complex wave, the reactance of the inductor is twice and the reactance of the capacitor one-half their respective values at the fundamental frequency; for the third harmonic the inductor reactance is three times and the capacitor reactance one-third, and so on. Thus the circuit impedance is different for each harmonic component.

Just what happens to the current wave shape depends upon the values of resistance and reactance involved and how the circuit is arranged. In a simple circuit with resistance and inductive reactance in series, the amplitudes of the harmonic currents will be reduced because the inductive reactance increases in proportion to frequency. When capacitance and resistance are in series, the harmonic current is likely to be accentuated because the capacitive reactance becomes lower as the frequency is raised. When both inductive and capacitive reactance are present the shape of the current wave can be altered in a variety of ways, depending upon the circuit and the "constants," or the relative values of L, C, and R, selected.

This property of nonuniform behavior with respect to fundamental and harmonics is an extremely useful one. It is the basis of "filtering," or the suppression of undesired frequencies in favor of a single desired frequency or group of such frequencies.

TRANSFORMERS FOR AUDIO FREQUENCIES

Two coils having mutual inductance constitute a transformer. The coil connected to the source of energy is called the primary coil, and the other is called the secondary coil.

The usefulness of the transformer lies in the fact that electrical energy can be transferred from one circuit to another without direct connection, and in the process can be readily changed from one voltage level to another. Thus, if a device to be operated requires, for example, 115 volts ac and only a 440-volt source is available, a transformer can be used to change the source voltage to that required. A transformer can be used only with ac, since no voltage will be induced in the secondary if the magnetic field is not changing. If dc is applied to the primary of a transformer, a voltage will be induced in the secondary only at the instant of closing or opening the primary circuit, since it is only at these times that the field is changing.

THE IRON-CORE TRANSFORMER

As shown in Fig. 2-32, the primary and secondary coils of a transformer may be wound on a core of magnetic material. This increases the inductance of the coils so that a relatively small number of turns may be used to induce a given value of voltage with a small current. A closed core (one having a continuous magnetic path) such as that shown in Fig. 2-32 also tends to insure that practically all of the field set up by the current in the primary coil will cut the turns of the secondary coil. However, the core introduces a power loss because of hysteresis and eddy currents so this type of construction is normally practicable only at power and audio frequencies. The discussion in this section is confined to transformers operating at such frequencies.

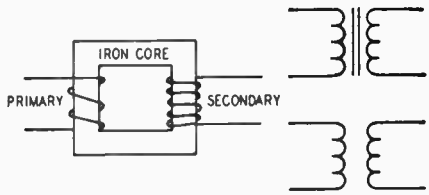

Fig. 2-32 — The transformer. Power is transferred from the primary coil to the secondary by means of the magnetic field. The upper symbol at right indicates an iron-core transformer, the lower one an air-core transformer.

Voltage and Turns Ratio

For a given varying magnetic field, the voltage induced in a coil in the field will be proportional to the number of turns in the coil. If the two coils of a transformer are in the same field (which is the case when both are wound on the same closed core) it follows that the induced voltages will be proportional to the number of turns in each coil. In the primary the induced voltage is practically equal to, and opposes, the applied voltage, as described earlier. Hence,

$$E_s = \frac{n_s}{n_p} E_p$$

where E_s = Secondary voltage
E_p = Primary applied voltage
n_s = Number of turns on secondary
n_p = Number of turns on primary

The ratio, ns/np is called the secondary-to-primary turns ratio of the transformer.

Example: A transformer has a primary of 400 turns and a secondary of 2800 turns, and an emf of 115 volts is applied to the primary.

$$E_s = \frac{n_s}{n_p} E_p = \frac{2800}{400} \times 115 = 7 \times 115$$
$$= 805 \text{ volts}$$

Also, if an emf of 805 volts is applied to the 2800-turn winding (which then becomes the primary) the output voltage from the 400-turn winding will be 115 volts.

Either winding of a transformer can be used as the primary, providing the winding has enough turns (enough inductance) to induce a voltage equal to the applied voltage without requiring an excessive current flow.

Effect of Secondary Current

The current that flows in the primary when no current is taken from the secondary is called the magnetizing current of the transformer. In any properly-designed transformer the primary inductance will be so large that the magnetizing current will be quite small. The power consumed by the transformer when the secondary is "open" – that is, not delivering power – is only the amount necessary to supply the losses in the iron core and in the resistance of the wire with which the primary is wound.

When power is taken from the secondary winding, the secondary current sets up a magnetic field that opposes the field set up by the primary current. But if the induced voltage in the primary is to equal the applied voltage, the original field must be maintained. Consequently, the primary must draw enough additional current to set up a field exactly equal and opposite to the field set up by the secondary current.

In practical calculations on transformers it may be assumed that the entire primary current is caused by the secondary "load." This is justifiable because the magnetizing current should be very small in comparison with the primary "load" current at rated power output.

If the magnetic fields set up by the primary and secondary currents are to be equal, the primary current multiplied by the primary turns must equal the secondary current multiplied by the secondary turns. From this it follows that

$$I_p = \frac{n_s}{n_p} I_s$$

where I_p = Primary current
I_s = Secondary current
n_p = Number of turns on primary
n_s = Number of turns on secondary

Example: Suppose that the secondary of the transformer in the previous example is delivering a current of 0.2 ampere to a load. Then the primary current will be

$$I_p = \frac{n_s}{n_p} I_s = \frac{2800}{400} \times 0.2 = 7 \times 0.2 = 1.4 \text{ amp.}$$

Although the secondary voltage is higher than the primary voltage, the secondary *current* is *lower* than the primary current, and by the same ratio.

Power Relationships; Efficiency

A transformer cannot create power; it can only transfer it and change the emf. Hence, the power taken from the secondary cannot exceed that taken by the primary from the source of applied emf. There is always some power loss in the resistance of the coils and in the iron core, so in all practical cases the power taken from the source will exceed that taken from the secondary. Thus,

$$P_o = nP_i$$

where P_o = Power output from secondary
P_i = Power input to primary
n = Efficiency factor

The efficiency, n, always is less than 1. It is usually expressed as a percentage; if n is 0.65, for instances, the efficiency is 65 percent.

Example: A transformer has an efficiency of 85 percent at its full-load output of 150 watts. The power input to the primary at full secondary load will be

$$P_i = \frac{P_o}{n} = \frac{150}{0.85} = 176.5 \text{ watts}$$

A transformer is usually designed to have its highest efficiency at the power output for which it is rated. The efficiency decreases with either lower or higher outputs. On the other hand, the *losses* in the transformer are relatively small at low output but increase as more power is taken. The amount of power that the transformer can handle is determined by its own losses, because these heat the wire and core. There is a limit to the temperature rise that can be tolerated, because too-high temperature either will melt the wire or cause the insulation to break down. A transformer can be operated a reduced output, even though the efficiency is low, becaise the actual loss will be low under such conditions.

The full-load efficiency of small power transformers such as are used in radio receivers and transmitters usually lies between about 60 and 90 percent, depending upon the size and design.

Leakage Reactance

In a practical transformer not all of the magnetic flux is common to both windings, although in well-designed transformers the amount of flux that "cuts" one coil and not the other is only a small percentage of the total flux. This leakage flux causes an emf of self-induction; consequently, there are small amounts of leakage inductance associated with both windings of the transformer. Leakage inductance acts in exactly the same way as an equivalent amount of ordinary inductance inserted in series with the circuit. It has, therefore, a certain reactance, depending upon the amount of leakage inductance and the frequency. This reactance is called leakage reactance.

Current flowing through the leakage reactance causes a voltage drop. This voltage drop increases with increasing current, hence it increases as more power is taken from the secondary. Thus, the greater the secondary current, the smaller the secondary terminal voltage becomes. The resistances of the transformer windings also cause voltage drops when current is flowing; although these voltage drops are not in phase with those caused by leakage reactance, together they result in a lower secondary voltage under load than is indicated by the turns ratio of the transformer.

At power frequencies (60 cycles) the voltage at the secondary, with a reasonably well-designed transformer, should not drop more than about 10 percent from open-circuit conditions to full load. The drop in voltage may be considerably more than this in a transformer operating at audio frequencies because the leakage reactance increases directly with the frequency.

Impedance Ratio

In an ideal transformer – one without losses or leakage reactance – the following relationship is true:

$$Z_p = Z_s \left[\frac{N_p}{N_s}\right]^2$$

where Z_p = Impedance looking into primary terminals from source of power
Z_s Impedance of load connected to secondary
N_p/N_s = Turns ratio, primary to secondary

That is, a load of any given impedance connected to the secondary of the transformer will be transformed to a different value "looking into" the primary from the source of power. The impedance transformation is proportional to the square of the primary-to-secondary turns ratio.

Example: A transformer has a primary-to-secondary turns ratio of 0.6 (primary has 6/10 as many turns as the secondary) and a load of 3000 ohms is connected to the secondary. The impedance looking into the primary then will be

$$Z_p = Z_s\left[\frac{N_p}{N_s}\right] = 3000 \times (0.6)^2 = 3000 \times 0.36$$
$$= 1080 \text{ ohms}$$

By choosing the proper turns ratio, the impedance of a fixed load can be transformed to any desired value, within practical limits. If transformer losses can be neglected, the transformed or "reflected" impedance has the same phase angle as the actual load impedance; thus if the load is a pure resistance the load presented by the primary to the source of power also will be a pure resistance.

The above relationship may be used in practical work even though it is based on an "ideal" transformer. Aside from the normal design requirements of reasonably low internal losses and low leakage reactance, the only requirement is that the primary have enough inductance to operate with low magnetizing current at the voltage applied to the primary.

The primary impedance of a transformer – *as it appears to the source of power* – is determined wholly by the load connected to the secondary and by the turns ratio. If the characteristics of the transformer have an appreciable effect on the impedance presented to the power source, the transformer is either poorly designed or is not suited to the voltage and frequency at which it is being used. Most transformers will operate quite well at voltages from slightly above to well below the design figure.

Impedance Matching

Many devices require a specific value of load resistance (or impedance) for optimum operation.

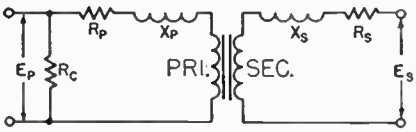

Fig. 2-33 — The equivalent circuit of a transformer includes the effects of leakage inductance and resistance of both primary and secondary windings. The resistance R_C is an equivalent resistance representing the core losses, which are essentially constant for any given applied voltage and frequency. Since these are comparatively small, their effect may be neglected in many approximate calculations.

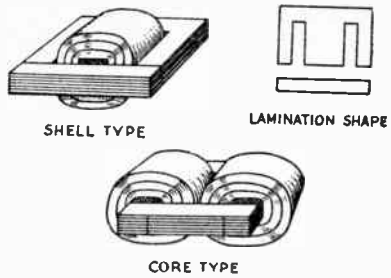

Fig. 2-34 — Two common types of transformer construction. Core pieces are interleaved to provide a continuous magnetic path.

The impedance of the actual load that is to dissipate the power may differ widely from this value, so a transformer is used to change the actual load into an impedance of the desired value. This is called impedance matching. From the preceding,

$$\frac{N_p}{N_s} = \sqrt{\frac{Z_p}{Z_s}}$$

where N_p/N_s = Required turns ratio, primary to secondary
Z_p = Primary impedance required
Z_s = Impedance of load connected to secondary

Example: A vacuum-tube af amplifier requires a load of 5000 ohms for optimum performance, and is to be connected to a loud-speaker having an impedance of 10 ohms. The turns ratio, primary to secondary, required in the coupling transformer is

$$\frac{N_p}{N_s} = \sqrt{\frac{Z_p}{Z_s}} = \sqrt{\frac{5000}{10}} = \sqrt{500} = 22.4$$

The primary therefore must have 22.4 times as many turns as the secondary.

Impedance matching means, in general, adjusting the load impedance – by means of a transformer or otherwise – to a desired value. However, there is also another meaning. It is possible to show that any source of power will deliver its maximum possible output when the impedance of the load is equal to the internal impedance of the source. The impedance of the source is said to be "matched" under this condition. The efficiency is only 50 percent in such a case; just as much power is used up in the source as is delivered to the load. Because of the poor efficiency, this type of impedance matching is limited to cases where only a small amount of power is available and heating from power loss in the source is not important.

Transformer Construction

Transformers usually are designed so that the magnetic path around the core is as short as possible. A short magnetic path means that the transformer will operate with fewer turns, for a given applied voltage, than if the path were long. A short path also helps to reduce flux leakage and therefore minimizes leakage reactance.

Two core shapes are in common use, as shown in Fig. 2-34. In the shell type both windings are placed on the inner leg, while in the core type the

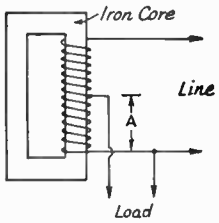

Fig. 2-35 — The autotransformer is based on the transformer principle, but uses only one winding. The line and load currents in the common winding *(A)* flow in opposite directions, so that the resultant current is the difference between them. The voltage across A is proportional to the turns ratio.

primary and secondary windings may be placed on separate legs, if desired. This is sometimes done when it is necessary to minimize capacitive effects between the primary and secondary, or when one of the windings must operate at very high voltage.

Core material for small transformers is usually silicon steel, called "transformer iron." The core is built up of laminations, insulated from each other (by a thin coating of shellac, for example) to prevent the flow of eddy currents. The laminations are interleaved at the ends to make the magnetic path as continuous as possible and thus reduce flux leakage.

The number of turns required in the primary for a given applied emf is determined by the size, shape and type of core material used, and the frequency. The number of turns required is inversely proportional to the cross-sectional area of the core. As a rough indication, windings of small power transformers frequently have about six to eight turns per volt on a core of 1-square-inch cross section and have a magnetic path 10 or 12 inches in length. A longer path or smaller cross section requires more turns per volt, and vice versa.

In most transformers the coils are wound in layers, with a thin sheet of treated-paper insulation between each layer. Thicker insulation is used between coils and between coils and core.

Autotransformers

The transformer principle can be utilized with only one winding instead of two, as shown in Fig. 2-35; the principles just discussed apply equally well. A one-winding transformer is called an autotransformer. The current in the common section (A) of the winding is the difference between the line (primary) and the load (secondary) currents, since these currents are out of phase. Hence if the line and load currents are nearly equal the common section of the winding may be wound with comparatively small wire. This will be the case only when the primary (line) and secondary (load) voltages are not very different. The autotransformer is used chiefly for boosting or reducing the power-line voltage by relatively small amounts. Continuously-variable autotransformers are commercially available under a variety of trade names; "Variac" and "Powerstat" are typical examples.

THE DECIBEL

In most radio communication the received signal is converted into sound. This being the case, it is useful to appraise signal strengths in terms of relative loudness as registered by the ear. A peculiarity of the ear is that an increase or decrease in loudness is responsive to the *ratio* of the amounts of power involved, and is practically independent of absolute value of the power. For example, if a person estimates that the signal is "twice as loud" when the transmitter power is increased from 10 watts to 40 watts, he will also estimate that a 400-watt signal is twice as loud as a 100-watt signal. In other words, the human ear has a *logarithmic* response.

This fact is the basis for the use of the relative-power unit called the decibel (abbreviated dB). A change of one decibel in the power level is just detectable as a change in loudness under ideal conditions. The number of decibels corresponding to a given power ratio is given by the following formula:

$$dB = 10 \log \frac{P_2}{P_1}$$

Common logarithms (base 10) are used.

Voltage and Current Ratios

Note that the decibel is based on *power* ratios. Voltage or current ratios can be used, but only when the impedance is the same for both values of voltage, or current. The gain of an amplifier cannot be expressed correctly in dB if it is based on the ratio of the output voltage to the input voltage unless both voltages are measured across the same value of impedance. When the impedance at both points of measurement is the same, the following formula may be used for voltage or current ratios:

$$dB = 20 \log \frac{V_2}{V_1} \qquad \text{or } 20 \log \frac{I_2}{I_1}$$

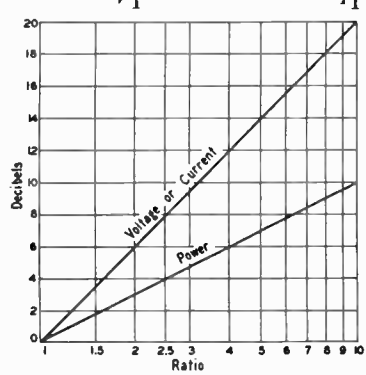

Fig. 2-36 — Decibel chart for power, voltage and current ratios for power ratios of 1:1 and 10:1. In determining decibels for current or voltage ratios the currents (or voltages) being compared must be referred to the same value of impedance.

Decibel Chart

The two formulas are shown graphically in Fig. 2-36 for ratios from 1 to 10. Gains (increases) expressed in decibels may be added arithmetically; losses (decreases) may be subtracted. A power decrease is indicated by prefixing the decibel figure with a minus sign. Thus +6 dB means that the power has been multiplied by 4, while −6 dB means that the power has been divided by 4.

The chart may be used for other ratios by adding (or subtracting, if a loss) 10 dB each time the ratio scale is multiplied by 10, for power ratios; or by adding (or subtracting) 20 dB each time the scale is multiplied by 10 for voltage or current ratios. For example, a power ratio of 2.5 is 4 dB (from the chart). A power ratio of 10 times 2.5, or 25, is 14 dB (10 + 4), and a power ratio of 100 times 2.5, or 250, is 24 dB (20 + 4). A voltage or current ratio of 4 is 12 dB, a voltage or current ratio of 40 is 32 dB (20 + 12), and one of 400 is 52 dB (40 + 12).

RADIO-FREQUENCY CIRCUITS

RESONANCE IN SERIES CIRCUITS

Fig. 2-37 shows a resistor, capacitor and inductor connected in series with a source of alternating current, the frequency of which can be varied over a wide range. At some *low* frequency the capacitive reactance will be much larger than the resistance of R, and the inductive reactance will be small compared with either the reactance of C or the resistance of R. (R is assumed to be the same at all frequencies.) On the other hand, at some very *high* frequency the reactance of C will be very small and the reactance of L will be very large. In either case the current will be small, because the net reactance is large.

At some intermediate frequency, the reactances of C and L will be equal and the voltage drops across the coil and capacitor will be equal and 180 degrees out of phase. Therefore they cancel each other completely and the current flow is determined wholly by the resistance, R. At that frequency the current has its largest possible value, assuming the source voltage to be constant regardless of frequency. A series circuit in which the inductive and capacitive reactances are equal is said to be resonant.

The principle of resonance finds its most extensive application in radio-frequency circuits. The reactive effects associated with even small inductances and capacitances would place drastic limitations on rf circuit operation if it were not possible to "cancel them out" by supplying the right amount of reactance of the opposite kind – in other words, "tuning the circuit to resonance."

Resonant Frequency

The frequency at which a series circuit is resonant is that for which $XL = XC$. Substituting the formulas for inductive and capacitive reactance gives

$$f = \frac{10^6}{2\pi\sqrt{LC}}$$

where f = Frequency in kilohertz (kHz)
L = Inductance in microhertz (MHz)
C = Capacitance in picofarads (pF)
π = 3.14

These units are inconveniently large for radio-frequency circuits. A formula using more appropriate units is

$$f = \frac{1}{2\pi\sqrt{LC}}$$

where f = Frequency in cycles per second
L = Inductance in henrys
C = Capacitance in farads
π = 3.14

Example: The resonant frequency of a series circuit containing a 5-μH inductor and a 35-pF capacitor is

$$f = \frac{10^6}{2\pi\sqrt{LC}} = \frac{10^6}{6.28 \times \sqrt{5 \times .35}}$$

$$= \frac{10^6}{6.28 \times 13.2} = \frac{10^6}{83} = 12{,}050 \text{ kHz}$$

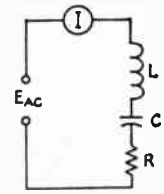

Fig. 2-37 – A series circuit containing L, C and R is "resonant" at the applied frequency when the reactance of C is equal to the reactance of L.

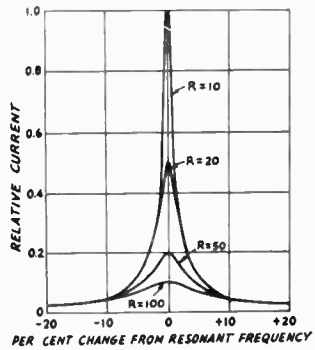

Fig. 2-38 – Current in a series-resonant circuit with various values of series resistance. The values are arbitrary and would not apply to all circuits, but represent a typical case. It is assumed that the reactances (at the resonant frequency) are 1000 ohms. Note that at frequencies more than plus or minus ten percent away from the resonant frequency the current is substantially unaffected by the resistance in the circuit.

The formula for resonant frequency is not affected by resistance in the circuit.

Resonance Curves

If a plot is drawn on the current flowing in the circuit of Fig. 2-37 as the frequency is varied (the applied voltage being constant) it would look like one of the curves in Fig. 2-38. The shape of the resonance curve at frequencies near resonance is determined by the ratio of reactance to resistance.

If the reactance of either the coil or capacitor is of the same order of magnitude as the resistance, the current decreases rather slowly as the frequency is moved in either direction away from resonance. Such a curve is said to be broad. On the other hand, if the reactance is considerably larger than the resistance the current decreases rapidly as the frequency moves away from resonance and the circuit is said to be sharp. A sharp circuit will respond a great deal more readily to the resonant frequency than to frequencies quite close to resonance; a broad circuit will respond almost equally well to a group or band of frequencies centering around the resonant frequency.

Both types of resonance curves are useful. A sharp circuit gives good selectivity – the ability to respond strongly (in terms of current amplitude) at one desired frequency and discriminate against others. A broad circuit is used when the apparatus must give about the same response over a band of frequencies rather than to a single frequency alone.

Q

Most diagrams of resonant circuits show only inductance and capacitance; no resistance is indicated. Nevertheless, resistance is always present. At frequencies up to perhaps 30 MHz this resistance is mostly in the wire of the coil. Above this frequency energy loss in the capacitor (principally in the solid dielectric which must be used to form an insulating support for the capacitor plates) also becomes a factor. This energy loss is equivalent to resistance. When maximum sharpness or selectivity is needed the object of design is to reduce the inherent resistance to the lowest possible value.

The value of the reactance of either the inductor or capacitor at the resonant frequency of a series-resonant circuit, divided by the *series* resistance in the circuit, is called the Q (quality factor) of the circuit, or

$$Q = \frac{X}{r}$$

where Q = Quality factor
X = Reactance of either coil or capacitor in ohms
r = Series resistance in ohms

Example: The inductor and capacitor in a series circuit each have a reactance of 350 ohms at the resonant frequency. The resistance is 5 ohms. Then the Q is

$$Q = \frac{X}{r} = \frac{350}{5} = 70$$

The effect of Q on the sharpness of resonance of a circuit is shown by the curves of Fig. 2-39. In these curves the frequency change is shown in percentage above and below the resonant frequency. Qs of 10, 20, 50 and 100 are shown; these values cover much of the range commonly used in radio work. The unloaded Q of a circuit is determined by the inherent resistances associated with the components.

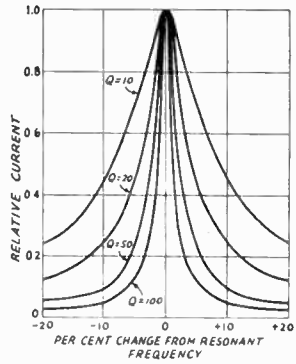

Fig. 2-39 – Current in series-resonant circuits having different Qs. In this graph the current at resonance is assumed to be the same in all cases. The lower the Q, the more slowly the current decreases as the applied frequency is moved away from resonance.

Voltage Rise at Resonance

When a voltage of the resonant frequency is inserted in series in a resonant circuit, the voltage that appears across either the inductor or capacitor is considerably higher than the applied voltage. The current in the circuit is limited only by the resistance and may have a relatively high value; however, the same current flows through the high reactances of the inductor and capacitor and causes large voltage drops. The ratio of the reactive voltage to the applied voltage is equal to the ratio of reactance to resistance. This ratio is also the Q of the circuit. Therefore, the voltage across either the inductor or capacitor is equal to QE where E is the voltage inserted in series. This fact accounts for the high voltages developed across the components of series-tuned antenna couplers (see chapter on "Transmission Lines").

RESONANCE IN PARALLEL CIRCUITS

When a variable-frequency source of constant voltage is applied to a parallel circuit of the type shown in Fig. 2-40 there is a resonance effect similar to that in a series circuit. However, in this case the "line" current (measured at the point indicated) is *smallest* at the frequency for which the inductive and capacitive reactances are equal. At that frequency the current through L is exactly canceled by the out-of-phase current through C, so that only the current taken by R flows in the line. At frequencies *below* resonance the through L is larger than that through C, because the reactance of L is smaller and that of C higher at low frequencies; there is only partial cancellation of the two reactive currents and the line current therefore is larger than the current taken by R alone. At frequencies *above* resonance the situation is reversed and more current flows through C than

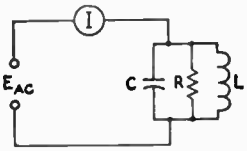

Fig. 2-40 — Circuit illustrating parallel resonance.

through L, so the line current again increases. The current at resonance, being determined wholly by R, will be small if R is large and large if R is small.

The resistance R shown in Fig. 2-40 is not necessarily an actual resistor. In many cases it will be the series resistance of the coil "transformed" to an equivalent parallel resistance (see later). It may be antenna or other load resistance coupled into the tuned circuit. In all cases it represents the total effective resistance in the circuit.

Parallel and series resonant circuits are quite alike in some respects. For instance, the circuits given at A and B in Fig. 2-41 will behave identically, when an external voltage is applied, if (1) L and C are the same in both cases; and (2) R multiplied by r, equals the square of the reactance (at resonance) of either L or C. When these conditions are met the two circuits will have the same Q. (These statements are approximate, but are quite accurate if the Q is 10 or more.) The circuit at A is a *series* circuit if it is viewed from the "inside" — that is, going around the loop formed by L, C and r — so its Q can be found from the ratio of X to r.

Thus a circuit like that of Fig. 2-41A has an equivalent parallel impedance (at resonance) of $R = \frac{X^2}{r}$; X is the reactance of either the inductor or the capacitor. Although R is not an actual resistor, to the source of voltage the parallel-resonant circuit "looks like" a pure resistance of that value. It is "pure" resistance because the inductive and capacitive currents are 180 degrees out of phase and are equal; thus there is no reactive current in the line. In a practical circuit with a high-Q capacitor, at the resonant frequency the parallel impedance is

$$Z_r = QX$$

where Z_r = Resistive impedance at resonance
Q = Quality factor of inductor
X = Reactance (in ohms) of either the inductor or capacitor

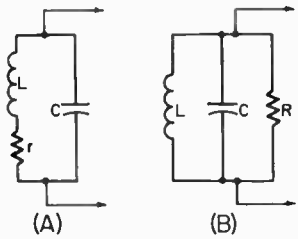

Fig. 2-41 — Series and parallel equivalents when the two circuits are resonant. The series resistance, r, in A is replaced in B by the equivalent parallel resistance $(R = X^2c/r = X^2L/r)$ and vice versa.

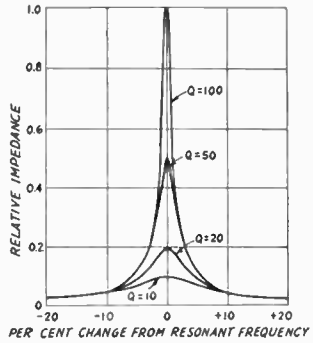

Fig. 2-42 — Relative impedance of parallel-resonant circuits with different Qs. These curves are similar to those in Fig. 2-39 for current in a series-resonant circuit. The effect of Q on impedance is most marked near the resonant frequency.

Example: The parallel impedance of a circuit with a coil Q of 50 and having inductive and capacitive reactance of 300 ohms will be

$$Z_r = QX = 50 \times 300 = 15{,}000 \text{ ohms}$$

At frequencies off resonance the impedance is no longer purely resistive because the inductive and capacitive currents are not equal. The off-resonant impedance therefore is complex, and is lower than the resonant impedance for the reasons previously outlined.

The higher the Q of the circuit, the higher the parallel impedance. Curves showing the variation of impedance (with frequency) of a parallel circuit have just the same shape as the curves showing the variation of current with frequency in a series circuit. Fig. 2-42 is a set of such curves. A set of curves showing the relative response as a function of the departure from the resonant frequency would be similar to Fig. 2-39. The −3 dB bandwidth (bandwidth at 0.707 relative response) is given by

$$\textit{Bandwidth} -3 \text{ dB} = f_o/Q$$

where f_o is the resonant frequency and Q the circuit Q. It is also called the "half-power" bandwidth, for ease of recollection.

Parallel Resonance in Low-Q Circuits

The preceding discussion is accurate only for Qs of 10 or more. When the Q is below 10, resonance in a parallel circuit having resistance in series with the coil, as in Fig. 2-41A, is not so easily defined. There is a set of values for L and C that will make the parallel impedance a pure resistance, but with these values the impedance does not have its maximum possible value. Another set of values for L and C will make the parallel impedance a maximum, but this maximum value is not a pure resistance. Either condition could be called "resonance," so with low-Q circuits it is necessary to distinguish between maximum impedance and resistive impedance parallel resonance. The difference between these L and C values and the equal reactances of a series-resonant circuit is appreciable when the Q is in the vicinity of 5, and becomes more marked with still lower Q values.

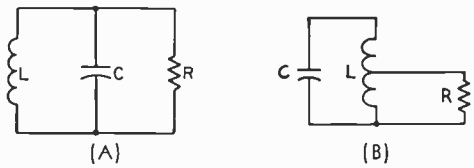

Fig. 2-43 — The equivalent circuit of a resonant circuit delivering power to a load. The resistor R represents the load resistance. At B the load is tapped across part of L, which by transformer action is equivalent to using a higher load resistance across the whole circuit.

Q of Loaded Circuits

In many applications of resonant circuits the only power lost is that dissipated in the resistance of the circuit itself. At frequencies below 30 MHz most of this resistance is in the coil. Within limits, increasing the number of turns in the coil increases the reactance faster than it raises the resistance, so coils for circuits in which the Q must be high are made with relatively large inductance for the frequency.

However, when the circuit delivers energy to a load (as in the case of the resonant circuits used in transmitters) the energy consumed in the circuit itself is usually negligible compared with that consumed by the load. The equivalent of such a circuit is shown in Fig. 2-43A, where the parallel resistor represents the load to which power is delivered. If the power dissipated in the load is at least ten times as great as the power lost in the inductor and capacitor, the parallel impedance of the resonant circuit itself will be so high compared with the resistance of the load that for all practical purposes the impedance of the combined circuit is equal to the load resistance. Under these conditions the Q of a parallel resonant circuit loaded by a resistive impedance is

$$Q = \frac{R}{X}$$

where R = Parallel load resistance (ohms)
X = Reactance (ohms)

Example: A resistive load of 3000 ohms is connected across a resonant circuit in which the inductive and capacitive reactances are each 250 ohms. The circuit Q is then

$$Q = \frac{R}{X} = \frac{3000}{250} = 12$$

The "effective" Q of a circuit loaded by a parallel resistance becomes higher when the reactances are decreased. A circuit loaded with a relatively low resistance (a few thousand ohms) must have low-reactance elements (large capacitance and small inductance) to have reasonably high Q.

Impedance Transformation

An important application of the parallel-resonant circuit is as an impedance-matching device in the output circuit of a vacuum-tube rf power amplifier. As described in the chapter on vacuum tubes, there is an optimum value of load resistance for each type of tube and set of operating conditions. However, the resistance of the load to which the tube is to deliver power usually is considerably lower than the value required for proper tube operation. To transform the actual load resistance to the desired value the load may be tapped across part of the coil, as shown in Fig. 2-43B. This is equivalent to connecting a higher value of load resistance across the whole circuit, and is similar in principle to impedance transformation with an iron-core transformer. In high-frequency resonant circuits the impedance ratio does not vary exactly as the square of the turns ratio, because all the magnetic flux lines do not cut every turn of the coil. A desired reflected impedance usually must be obtained by experimental adjustment.

When the load resistance has a very low value (say below 100 ohms) it may be connected in series in the resonant circuit (as in Fig. 2-41A, for example), in which case it is transformed to an equivalent parallel impedance as previously described. If the Q is at least 10, the equivalent parallel impedance is

$$Z_r = \frac{X^2}{r}$$

where Z_r = Resistive parallel impedance at resonance
X = Reactance (in ohms) of either the coil or capacitor
r = Load resistance inserted in series

If the Q is lower than 10 the reactance will have to be adjusted somewhat, for the reasons given in the discussion of low-Q circuits, to obtain a resistive impedance of the desired value.

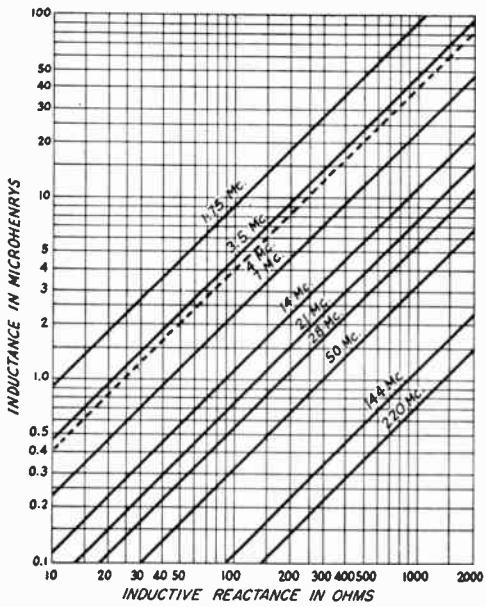

Fig. 2-44 — Reactance chart for inductance values commonly used in amateur bands from 1.75 to 220 MHz.

Reactance Values

The charts of Figs. 2-44 and 2-45 show reactance values of inductances and capacitances in the range commonly used in rf tuned circuits for the amateur bands. With the exception of the 3.5-4 MHz band, limiting values for which are shown on the charts, the change in reactance over a band, for either inductors or capacitors, is small enough so that a single curve gives the reactance with sufficient accuracy for most practical purposes.

L/C Ratio

The formula for resonant frequency of a circuit shows that the same frequency always will be obtained so long as the *product* of L and C is constant. Within this limitation, it is evident that L can be large and C small, L small and C large, etc. The relation between the two for a fixed frequency is called the L/C ratio. A high-C circuit is one that has more capacitance than "normal" for the frequency; a low-C circuit is one that has less than normal capacitance. These terms depend to a considerable extent upon the particular application considered, and have no exact numerical meaning.

LC Constants

It is frequently convenient to use the numerical value of the LC constant with a number of calculations have to be made involving different L/C ratios for the same frequency. The constant for any frequency is given by the following equation:

$$LC = \frac{25{,}330}{f^2}$$

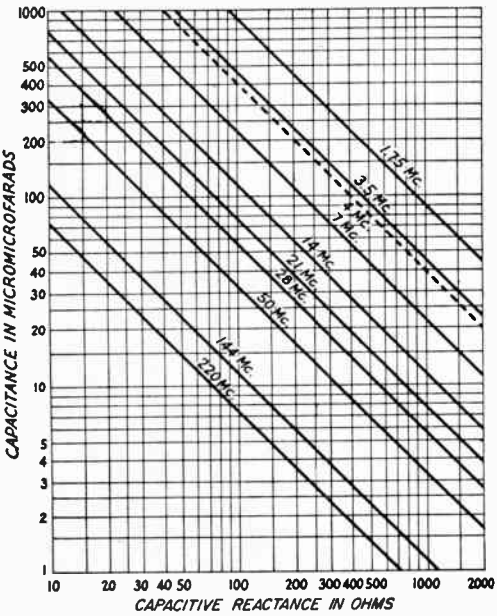

Fig. 2-45 — Reactance chart for capacitance values commonly used in amateur bands from 1.75 to 220 MHz.

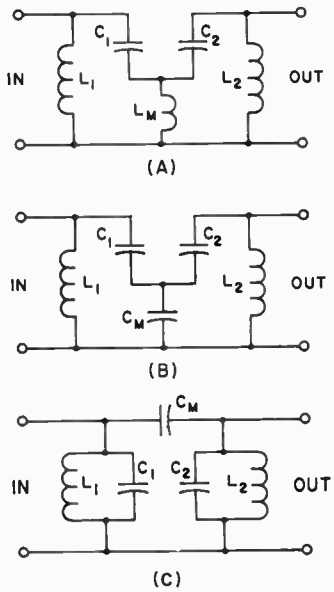

Fig. 2-46 — Three methods of circuit coupling.

where L = Inductance in microhenrys (μH)
C = Capacitance in picofarads (pF)
f = Frequency in megahertz

Example: Find the inductance required to resonate at 3650 kHz (3.65 MHz) with capacitances of 25, 50, 100 and 500 pF. The LC constant is

$$LC = \frac{25{,}330}{(3.65)^2} = \frac{25{,}330}{13.35} = 1900$$

With 25 pF $L = 1900/C = 1900/25 = 76\ \mu$H
50 pF $L = 1900/C = 1900/50 = 38\ \mu$H
100 pF $L = 1900/C = 1900/100 = 19\ \mu$H
500 pF $L = 1900/C = 1900/500 = 3.8\ \mu$H

COUPLED CIRCUITS

Energy Transfer and Loading

Two circuits are coupled when energy can be transferred from one to the other. The circuit delivering power is called the primary circuit; the one receiving power is called the secondary circuit. The power may be practically all dissipated in the secondary circuit itself (this is usually the case in receiver circuits) or the secondary may simply act as a medium through which the power is transferred to a load. In the latter case, the coupled circuits may act as a radio-frequency impedance-matching device. The matching can be accomplished by adjusting the loading on the secondary and by varying the amount of coupling between the primary and secondary.

Coupling by a Common Circuit Element

One method of coupling between two resonant circuits is through a circuit element common to both. The three common variations of this type of coupling are shown in Fig. 2-46; the circuit element common to both circuits carries the subscript M. At A and B current circulating in

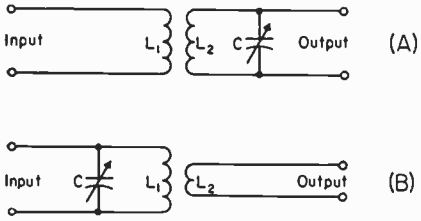

Fig. 2-47 — Single-tuned inductively coupled circuits.

L1C1 flows through the common element, and the voltage developed across this element causes current to flow in *L2C2*. At *C*, *CM* and *C2* form a capacitive voltage divider across *L1C1*, and some of the voltage developed across *L1C1* is applied across *L2C2*.

If both circuits are resonant to the same frequency, as is usually the case, the value of coupling reactance required for maximum energy transfer can be approximated by the following, based on $L1 = L2$, $C1 = C2$ and $Q1 = Q2$:

$$\text{(A) } L_M \approx L1/Q1; \quad \text{(B) } C_M \approx Q1C1; \quad \text{(C) } C_M \approx C1/Q1$$

The coupling can be increased by increasing the above coupling elements in A and C and decreasing the value in B. When the coupling is increased, the resultant bandwidth of the combination is increased, and this principle is sometimes applied to "broad-band" the circuits in a transmitter or receiver. When the coupling elements in A and C are decreased, or when the coupling element in B is increased, the coupling between the circuits is decreased below the *critical coupling* value on which the above approximations are based. Less than critical coupling will decrease the bandwidth and the energy transfer; the principle is often used in receivers to improve the selectivity.

Inductive Coupling

Figs. 2-47 and 2-48 show inductive coupling, or coupling by means of the mutual inductance between two coils. Circuits of this type resemble the iron-core transformer, but because only a part of the magnetic flux lines set up by one coil cut the turns of the other coil, the simple relationships between turns ratio, voltage ratio and impedance ratio in the iron-core transformer do not hold.

Two types of inductively-coupled circuits are shown in Fig. 2-47. Only one circuit is resonant. The circuit at A is frequently used in receivers for coupling between amplifier tubes when the tuning of the circuit must be varied to respond to signals of different frequencies. Circuit B is used principally in transmitters, for coupling a radio-frequency amplifier to a resistive load.

In these circuits the coupling between the primary and secondary coils usually is "tight" — that is, the coefficient of coupling between the coils is large. With very tight coupling either circuit operates nearly as though the device to which the untuned coil is connected were simply tapped across a corresponding number of turns on the tuned-circuit coil, thus either circuit is approximately equivalent to Fig. 2-43B.

By proper choice of the number of turns on the untuned coil, and by adjustment of the coupling, the parallel impedance of the tuned circuit may be adjusted to the value required for the proper operation of the device to which it is connected. In any case, the maximum energy transfer possible for a given coefficient of coupling is obtained when the reactance of the untuned coil is equal to the resistance of its load.

The *Q* and parallel impedance of the tuned circuit are reduced by coupling through an untuned coil in much the same way as by the tapping arrangement shown in Fig. 2-43B.

Coupled Resonant Circuits

When the primary and secondary circuits are both tuned, as in Fig. 2-48, the resonance effects in both circuits make the operation somewhat more complicated than in the simpler circuits just considered. Imagine first that the two circuits are not coupled and that each is independently tuned to the resonant frequency. The impedance of each will be purely resistive. If the primary circuit is connected to a source of rf energy of the resonant frequency and the secondary is then loosely coupled to the primary, a current will flow in the secondary circuit. In flowing through the resistance of the secondary circuit and any load that may be connected to it, the current causes a power loss. This power must come from the energy source through the primary circuit, and manifests itself in the primary as an increase in the equivalent resistance in series with the primary coil. Hence the *Q* and parallel impedance of the primary circuit are decreased by the coupled secondary. As the coupling is made greater (without changing the tuning of either circuit) the coupled resistance becomes larger and the parallel impedance of the primary continues to decrease. Also, as the coupling is made tighter the amount of power transferred from the primary to the secondary will

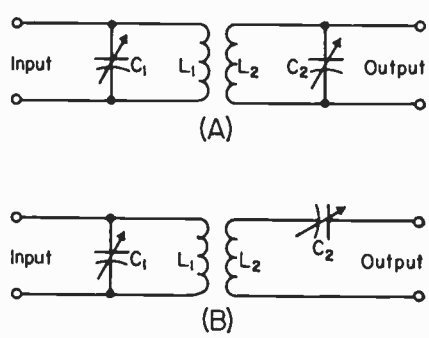

Fig. 2-48 — Inductively-coupled resonant circuits. Circuit A is used for high-resistance loads (load resistance much higher than the reactance of either L2 or C2 at the resonant frequency). Circuit B is suitable for low resistance loads (load resistance much lower than the reactance of either L2 or C2 at the resonant frequency).

increase to a maximum of one value of coupling, called critical coupling, but then decreases if the coupling is tightened still more (still without changing the tuning).

Critical coupling is a function of the Qs of the two circuits. A higher coefficient of coupling is required to reach critical coupling when the Qs are low; if the Qs are high, as in receiving applications, a coupling coefficient of a few per cent may give critical coupling.

With loaded circuits such as are used in transmitters the Q may be too low to give the desired power transfer even when the coils are coupled as tightly as the physical construction permits. In such case, increasing the Q of either circuit will be helpful, although it is generally better to increase the Q of the lower-Q circuit rather than the reverse. The Q of the parallel-tuned primary (input) circuit can be increased by decreasing the L/C ratio because, as shown in connection with Fig. 2-43, this circuit is in effect loaded by a parallel resistance (effect of coupled-in resistance). In the parallel-tuned secondary circuit, Fig. 2-48A, the Q may be increased by *increasing* the L/C ratio. There will generally be no difficulty in securing sufficient coupling, with practicable coils, if the product of the Qs of the two tuned circuits is 10 or more. A smaller product will suffice if the coil construction permits tight coupling.

Selectivity

In Fig. 2-47 only one circuit is tuned and the selectivity curve will be essentially that of a single resonant circuit. As stated, the effective Q depends upon the resistance connected to the untuned coil.

In Fig. 2-48, the selectivity is increased. It approaches that of a single tuned circuit having a Q equalling the sum of the individual circuit Qs – *if* the coupling is well below critical (this is not the condition for optimum power transfer discussed immediately above) and both circuits are tuned to resonance. The Qs of the individual circuits are affected by the degree of coupling, because each couples resistance into the other; the tighter the coupling, the lower the individual Qs and therefore the lower the over-all selectivity.

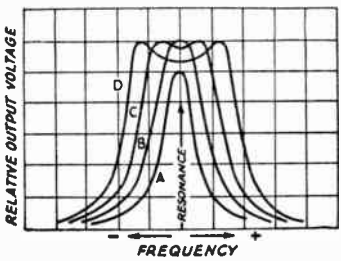

Fig. 2-49 – Showing the effect on the output voltage from the secondary circuit of changing the coefficient of coupling between two resonant circuits independently tuned to the same frequency. The voltage applied to the primary is held constant in amplitude while the frequency is varied, and the output voltage is measured across the secondary.

If both circuits are independently tuned to resonance, the over-all selectivity will vary about as shown in Fig. 2-49 as the coupling is varied. With loose coupling, A, the output voltage (across the secondary circuit) is small and the selectivity is high. As the coupling is increased the secondary voltage also increases until critical coupling, B, is reached. At this point the output voltage at the resonant frequency is maximum but the selectivity is lower than with looser coupling. At still tighter coupling, C, the output voltage at the resonant frequency decreases, but as the frequency is varied either side of resonance it is found that there are two "humps" to the curve, one on either side of resonance. With very tight coupling, D, there is a further decrease in the output voltage at resonance and the "humps" are farther away from the resonant frequency. Curves such as those at C and D are called flat-topped because the output voltage does not change much over an appreciable band of frequencies.

Note that the off-resonance humps have the same maximum value as the resonant output voltage at critical coupling. These humps are caused by the fact that at frequencies off resonance the secondary circuit is reactive and couples reactance as well as resistance into the primary. The coupled resistance decreases off resonance, and each hump represents a new condition of critical coupling at a frequency to which the primary is tuned by the additional coupled-in reactance from the secondary.

Fig. 2-50 shows the response curves for various degrees of coupling between two circuits tuned to a frequency f_o. Equal Qs are assumed in both circuits, although the curves are representative if the Qs differ by ratios up to 1.5 or even 2 to 1. In these cases, a value of $Q = \sqrt{Q1\,Q2}$ should be used.

Band-Pass Coupling

Over-coupled resonant circuits are useful where substantially uniform output is desired over a continuous band of frequencies, without readjustment of tuning. The width of the flat top of the resonance curve depends on the Qs of the two circuits as well as the tightness of coupling; the frequency separation between the humps will increase, and the curve become more flat-topped, as the Qs are lowered.

Band-pass operation also is secured by tuning the two circuits to slightly different frequencies, which gives a double-humped resonance curve even with loose coupling. This is called stagger tuning. To secure adequate power transfer over the frequency band it is usually necessary to use tight coupling and experimentally adjust the circuits for the desired performance.

Link Coupling

A modification of inductive coupling, called link coupling, is shown in Fig. 2-51. This gives the effect of inductive coupling between two coils that have no mutual inductance; the link is simply a means for providing the mutual inductance. The total mutual inductance between two coils coupled

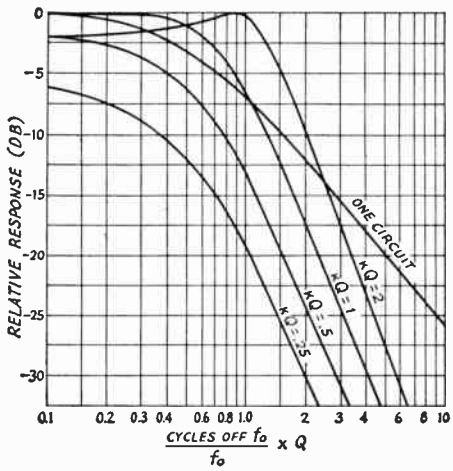

Fig. 2-50 — Relative response for a single tuned circuit and for coupled circuits. For inductively-coupled circuits (Figs. 2-46A and 2-48A),

$$k = \frac{M}{\sqrt{L1L2}}$$

where M is the mutual inductance. For capacitance-coupled circuits (Figs. 2-46B and 2-46C),

$$k \cong \frac{\sqrt{C1C2}}{C_M} \text{ and } k \cong \frac{C_M}{\sqrt{C1C2}}$$

respectively.

by a link cannot be made as great as if the coils themselves were coupled. This is because the coefficient of coupling between air-core coils is considerably less than 1, and since there are two coupling points the over-all coupling coefficient is less than for any *pair* of coils. In practice this need not be disadvantageous because the power transfer can be made great enough by making the tuned circuits sufficiently high-Q. Link coupling is convenient when ordinary inductive coupling would be impracticable for constructional reasons.

The link coils usually have a small number of turns compared with the resonant-circuit coils. The number of turns is not greatly important, because the coefficient of coupling is relatively independent of the number of turns on either coil; it is more important that both link coils should have about the *same* inductance. The length of the link between the coils is not critical if it is very small compared with the wavelength, but if the length is more than about one-twentieth of a wavelength the link operates more as a transmission line than as a means for providing mutual inductance. In such case it should be treated by the methods described in the chapter on Transmission Lines.

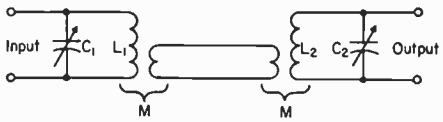

Fig. 2-51 — Link coupling. The mutual inductances at both ends of the link are equivalent to mutual inductance between the tuned circuits, and serve the same purpose.

IMPEDANCE-MATCHING CIRCUITS

The coupling circuits discussed in the preceding section have been based either on inductive coupling or on coupling through a common circuit element between two resonant circuits. These are not the only circuits that may be used for transferring power from one device to another. There is, in fact, a wide variety of such circuits available, all of them being classified generally as impedance-matching networks. Several networks frequently used in amateur equipment are shown in Fig. 2-52.

The L Network

The L network is the simplest possible impedance-matching circuit. It closely resembles an ordinary resonant circuit with the load resistance, R, Fig. 2-52, either in series or parallel. The arrangement shown in Fig. 2-52A is used when the desired impedance, R_{in}, is larger than the actual load resistance, R, while Fig. 2-52B is used in the opposite case. The design equations for each case are given in the figure, in terms of the circuit reactances. The reactances may be converted to inductance and capacitance by means of the formulas previously given or taken directly from the charts of Figs. 2-44 and 2-45.

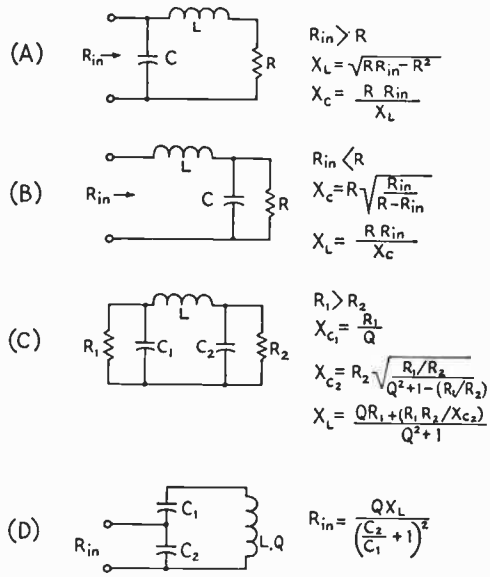

Fig. 2-52 — Impedance-matching networks adaptable to amateur work. (A) L network for transforming to a lower value of resistance. (B) L network for transforming to a higher resistance value. (C) Pi network. R1 is the larger of the two resistors; Q is defined as R1/XC1. (D) Tapped tuned circuit used in some receiver applications. The impedance of the tuned circuit is transformed to a lower value, Rin, by the capacitive divider.

When the impedance transformation ratio is large – that is, one of the two impedances is of the order of 100 times (or more) larger than the other – the operation of the circuit is exactly the same as previously discussed in connection with impedance transformation with a simple *LC* resonant circuit.

The *Q* of an *L* network is found in the same way as for simple resonant circuits. That is, it is equal to XL/R or R_{IN}/XC in Fig. 2-52A, and to XL/R_{IN} or R/XC in Fig. 2-52B. The value of *Q* is determined by the ratio of the impedances to be matched, and cannot be selected independently. In the equations of Fig. 2-52 it is assumed that both *R* and R_{in} are pure resistances.

The Pi Network

The pi network, shown in Fig. 2-52C, offers more flexibility than the *L* since the operating *Q* may be chosen practically at will. The only limitation on the circuit values that may be used is that the reactance of the series arm, the inductor *L* in the figure, must not be greater than the square root of the product of the two values of resistive impedance to be matched. As the circuit is applied in amateur equipment, this limiting value of reactance would represent a network with an undesirably low operating *Q*, and the circuit values ordinarily used are well on the safe side of the limiting values.

In its principal application as a "tank" circuit matching a transmission line to a power amplifier tube, the load *R2* will generally have a fairly low value of resistance (up to a few hundred ohms) which *R1*, the required load for the tube, will be of the order of a few thousand ohms. In such a case the *Q* of the circuit is defined as $R1/XC1$, so the choice of a value for the operating *Q* immediately sets the value of *XC1* and hence of *C1*. The values of *XC2* and *XL* are then found from the equations given in the figure.

Graphical solutions for practical cases are given in the chapter on transmitter design in the discussion of plate tank circuits. The *L* and *C* values may be calculated from the reactances or read from the charts of Figs. 2-44 and 2-45.

Tapped Tuned Circuit

The tapped tuned circuit of Fig. 2-52D is useful in some receiver applications, where it is desirable to use a high-impedance tuned circuit as a lower-impedance load. When the *Q* of the inductor has been determined, the capacitors can be selected to give the desired impedance transformation and the necessary resultant capacitance to tune the circuit to resonance.

FILTERS

A filter is an electrical circuit configuration (network) designed to have specific characteristics with respect to the transmission or attenuation of various frequencies that may be applied to it. There are three general types of filters: **low-pass**, **high-pass**, and **band-pass**.

A low-pass filter is one that will permit all frequencies below a specified one called the cut-off frequency to be transmitted with little or no loss, but that will attenuate all frequencies above the cut-off frequency.

A high-pass filter similarly has a cut-off frequency, above which there is little or no loss in transmission, but below which there is considerable attenuation. Its behavior is the opposite of that of the low-pass filter.

A band-pass filter is one that will transmit a selected band of frequencies with substantially no loss, but that will attenuate all frequencies either higher or lower than the desired band.

The **pass band** of a filter is the frequency spectrum that is transmitted with little or no loss. The transmission characteristic is not necessarily perfectly uniform in the pass band, but the variations usually are small.

The **stop band** is the frequency region in which attenuation is desired. The attenuation may vary in the stop band, and in a simple filter usually is least near the cut-off frequency, rising to high values at frequencies considerably removed from the cut-off frequency.

Filters are designed for a specific value of purely resistive impedance (the terminating impedance of the filter). When such an impedance is connected to the output terminals of the filter, the impedance looking into the input terminals has essentially the same value, throughout most of the pass band. Simple filters do not give perfectly uniform performance in this respect, but the input impedance of a properly-terminated filter can be made fairly constant, as well as closer to the design value, over the pass band by using m-derived filter sections.

A discussion of filter design principles is beyond the scope of this *Handbook*, but it is not difficult to build satisfactory filters from the circuits and formulas given in Fig. 2-53. Filter circuits are built up from elementary sections as shown in the figure. These sections can be used alone or, if greater attenuation and sharper cut-off (that is, more rapid rate of rise of attenuation with frequency beyond the cut-off frequency) are required, several sections can be connected in series. In the low- and high-pass filters, f_c represents the cut-off frequency, the highest (for the low-pass) or the lowest (for the high-pass) frequency transmitted without attenuation. In the band-pass filter designs, $f1$ is the low-frequency cut-off and $f2$ the high-frequency cut-off. The units for *L, C, R* and *f* are henrys, farads, ohms and cycles per second, respectively.

All of the types shown are "unbalanced" (one side grounded). For use in balanced circuits (e.g., 300-ohm transmission line, or push-pull audio circuits), the series reactances should be equally divided between the two legs. Thus the balanced constant-*k* π-section low-pass filter would use two inductors of a value equal to $L_k/2$, while the balanced constant-*k* π-section high-pass filter would use two capacitors each equal to $2C_k$.

If several low- (or high-) pass sections are to be used, it is advisable to use *m*-derived end sections on either side of a constant-*k* center section, although an *m*-derived center section can be used. The factor *m* determines the ratio of the cut-off

LOW-PASS FILTERS

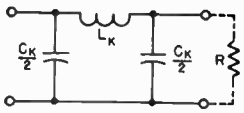

Constant-k π section

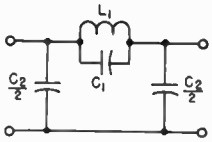

m-derived π section

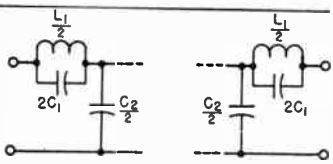

m-derived end sections for use with intermediate π section

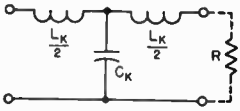

Constant-k T section

$L_K = \frac{R}{\pi f_c}$ $C_K = \frac{1}{\pi f_c R}$

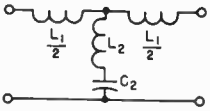

m-derived T section

$L_1 = mL_K$ $C_1 = \frac{1-m^2}{4m} C_K$

$L_2 = \frac{1-m^2}{4m} L_K$ $C_2 = m C_K$

m-derived end sections for use with intermediate T section

$L_1 = mL_K$ $C_1 = \frac{1-m^2}{4m} C_K$

$L_2 = \frac{1-m^2}{4m} L_K$ $C_2 = m C_K$

HIGH-PASS FILTERS

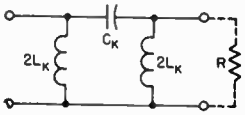

Constant-k π section

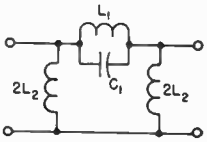

m-derived π section

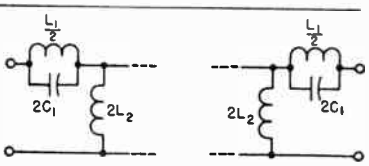

m-derived end sections for use with intermediate π section

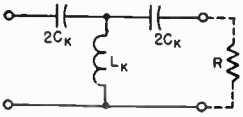

Constant-k T section

$L_K = \frac{R}{4\pi f_c}$ $C_K = \frac{1}{4\pi f_c R}$

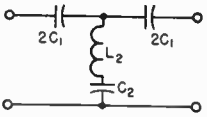

m-derived T section

$L_1 = \frac{4m}{1-m^2} L_K$ $C_1 = \frac{C_K}{m}$

$L_2 = \frac{L_K}{m}$ $C_2 = \frac{4m}{1-m^2} C_K$

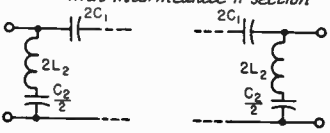

m-derived end section for use with intermediate T section

$L_1 = \frac{4m}{1-m^2} L_K$ $C_1 = \frac{C_K}{m}$

$L_2 = \frac{L_K}{m}$ $C_2 = \frac{4m}{1-m^2} C_K$

BANDPASS FILTERS

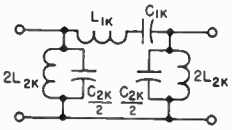

Constant-k π section

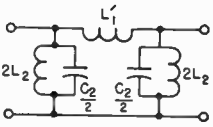

Three-element π section

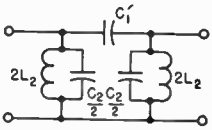

Three-element π section

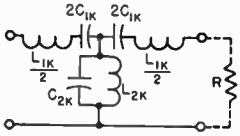

Constant-k T section

$L_{1K} = \frac{R}{\pi(f_2-f_1)}$ $C_{1K} = \frac{f_2-f_1}{4\pi f_1 f_2 R}$

$L_{2K} = \frac{(f_2-f_1)R}{4\pi f_1 f_2}$ $C_{2K} = \frac{1}{\pi(f_2-f_1)R}$

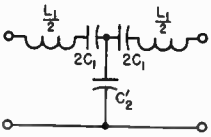

Three-element T section

$L_1 = L_{1K}$ $L_1' = \frac{R}{\pi(f_1+f_2)}$

$C_1 = \frac{f_2-f_1}{4\pi f_1^2 R}$ $L_2 = \frac{(f_2-f_1)R}{4\pi f_1^2}$

$C_2 = C_{2K}$ $C_2' = \frac{1}{\pi(f_1+f_2)R}$

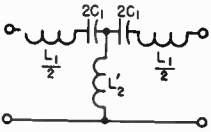

Three-element T section

$L_1 = \frac{f_1 R}{\pi f_2(f_2-f_1)}$ $C_1 = C_{1K}$

$C_1' = \frac{f_1+f_2}{4\pi f_1 f_2 R}$ $L_2 = L_{2K}$

$L_2' = \frac{(f_1+f_2)R}{4\pi f_1 f_2}$ $C_2 = \frac{f_1}{\pi f_2(f_2-f_1)R}$

Fig. 2-53 — Basic filter sections and design formulas. In the above formulas R is in ohms, C in farads, L in henrys, and f in cycles per second.

frequency, f_c to a frequency of high attenuation, f_∞. Where only one m-derived section is used, a value of 0.6 is generally used for m, although a deviation of 10 to 15 percent from this value is not too serious in amateur work. For a value of m = 0.6, f_∞ will be $1.25f_c$ for the low-pass filter and $0.8f_c$ for the high-pass filter. Other values can be found from

$$m = \sqrt{1 - \left(\frac{f_c}{f_\infty}\right)^2} \text{ for the low-pass filter and}$$

$$m = \sqrt{1 - \left(\frac{f_\infty}{f_c}\right)^2} \text{ for the high-pass filter.}$$

The output sides of the filters shown should be terminated in a resistance equal to R, and there should be little or no reactive component in the termination.

PIEZOELECTRIC CRYSTALS

A number of crystalline substances found in nature have the ability to transform mechanical strain into an electrical charge, and *vice versa*. This property is known as the piezoelectric effect. A small plate or bar cut in the proper way from a quartz crystal and placed between two conducting electrodes will be mechanically strained when the electrodes are connected to a source of voltage. Conversely, if the crystal is squeezed between two electrodes a voltage will be developed between the electrodes.

Piezoelectric crystals can be used to transform mechanical energy into electrical energy, and vice versa. They are used in microphones and phonograph pick-ups, where mechanical vibrations are transformed into alternating voltages of corresponding frequency. They are also used in headsets and loudspeakers, transforming electrical energy into mechanical vibration. Crystals of Rochelle salts are used for these purposes.

Crystal Resonators

Crystalline plates also are mechanical resonators that have natural frequencies of vibration ranging from a few thousand cycles to tens of megacycles per second. The vibration frequency depends on the kind of crystal, the way the plate is cut from the natural crystal, and on the dimensions of the plate. The thing that makes the crystal resonator valuable is that it has extremely high Q, ranging from a minimum of about 20,000 to as high as 1,000,000.

Analogies can be drawn between various mechanical properties of the crystal and the electrical characteristics of a tuned circuit. This leads to an "equivalent circuit" for the crystal. The electrical

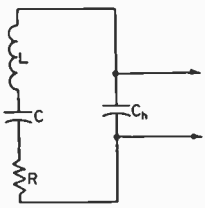

Fig. 2-54 — Equivalent circuit of a crystal resonator. L, C and R are the electrical equivalents of mechanical properties of the crystal; Ch is the capacitance of the holder plates with the crystal plate between them.

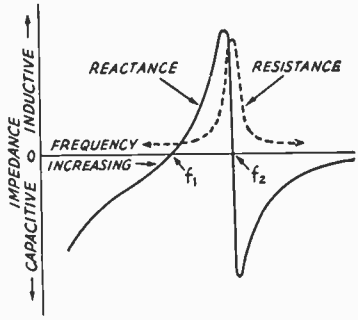

Fig. 2-55 — Reactance and resistance vs. frequency of a circuit of the type shown in Fig. 2-54. Actual values of reactance, resistance and the separation between the series- and parallel-resonant frequencies, f_1, and f_2, respectively, depend on the circuit constants.

coupling to the crystal is through the holder plates between which it is sandwiched; these plates form, with the crystal as the dielectric, a small capacitor like any other capacitor constructed of two plates with a dielectric between. The crystal itself is equivalent to a series-resonant circuit, and together with the capacitance of the holder forms the equivalent circuit shown in Fig. 2-54. At frequencies of the order of 450 kHz, where crystals are widely used as resonators, the equivalent L may be several henrys and the equivalent C only a few hundredths of a picofarad. Although the equivalent R is of the order of a few thousand ohms, the reactance at resonance is so high that the Q of the crystal likewise is high.

A circuit of the type shown in Fig. 2-54 has a series-resonant frequency, when viewed from the circuit terminals indicated by the arrowheads, determined by L and C only. At this frequency the circuit impedance is simply equal to R, providing the reactance of Ch is large compared with R (this is generally the case). The circuit also has a parallel-resonant frequency determined by L and the equivalent capacitance of C and Ch in series. Since this equivalent capacitance is smaller than C alone, the parallel-resonant frequency is higher than the series-resonant frequency. The separation between the two resonant frequencies depends on the ratio of Ch to C, and when this ratio is large (as in the case of a crystal resonator, where Ch will be a few pF, in the average case) the two frequencies will be quite close together. A separation of a kilocycle or less at 455 kHz is typical of a quartz crystal.

Fig. 2-55 shows how the resistance and reactance of such a circuit vary as the applied frequency is varied. The reactance passes through zero at both resonant frequencies, but the resistance rises to a large value at parallel resonance, just as in any tuned circuit.

Quartz crystals may be used either as simple resonators for their selective properties or as the frequency-controlling elements in oscillators as described in later chapters. The series-resonant frequency is the one principally used in the former case, while the more common forms of oscillator circuit use the parallel-resonant frequency.

PRACTICAL CIRCUIT DETAILS

COMBINED AC AND DC

Most radio circuits are built around vacuum tubes, and it is the nature of these tubes to require direct current (usually at a fairly high voltage) for their operation. They convert the direct current into an alternating current (and sometimes the reverse) at frequencies varying from well down in the audio range to well up in the super-high range. The conversion process almost invariably requires that the direct and alternating currents meet somewhere in the circuit.

In this meeting, the ac and dc are actually combined into a single current that "pulsates" (at the ac frequency) about an average value equal to the direct current. This is shown in Fig. 2-56. It is convenient to consider that the alternating current is superimposed on the direct current, so we may look upon the actual current as having two components, one dc and the other ac.

In an alternating current the positive and negative alternations have the same average amplitude, so when the wave is superimposed on a direct current the latter is alternately increased and decreased by the same amount. There is thus no *average* change in the direct current. If a dc instrument is being used to read the current, the reading will be exactly the same whether or not the ac is superimposed.

However, there is actually more power in such a combination current than there is in the direct current alone. This is because power varies as the square of the instantaneous value of the current, and when all the instantaneous squared values are averaged over a cycle the total power is greater than the dc power alone. If the ac is a sine wave having a peak value just equal to the dc, the power in the circuit is 1.5 times the dc power. An instrument whose readings are proportional to power will show such an increase.

Series and Parallel Feed

Fig. 2-57 shows in simplified form how dc and ac may be combined in a vacuum-tube circuit. In this case, it is assumed that the ac is at radio frequency, as suggested by the coil-and-capacitor tuned circuit. It is also assumed that rf current can easily flow through the dc supply; that is, the impedance of the supply at radio frequencies is so small as to be negligible.

In the circuit at the left, the tube, tuned circuit, and dc supply all are connected in series. The direct current flows through the rf coil to get to the tube; the rf current generated by the tube flows through the dc supply to get to the tuned circuit. This is series feed. It works because the impedance of the dc supply at radio frequencies is so low that it does not affect the flow of *rf* current, because the dc resistance of the coil is so low that it does not affect the flow of *direct* current.

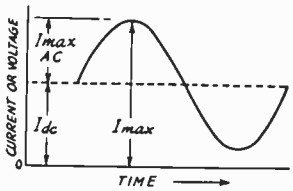

Fig. 2-56 — Pulsating dc, composed of an alternating current or voltage superimposed on a steady direct current or voltage.

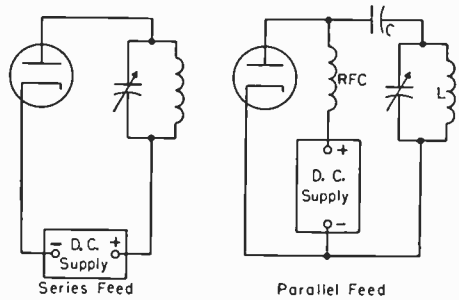

Fig. 2-57 — Illustrating series and parallel feed.

In the circuit at the right the direct current does not flow through the rf tuned circuit, but instead goes to the tube through a second coil, *RFC* (radio-frequency choke). Direct current cannot flow through *L* because a blocking capacitance, *C*, is placed in the circuit to prevent it. (Without *C*, the dc supply would be short-circuited by the low resistance of *L*.) On the other hand, the rf current generated by the tube can easily flow through *C* to the tuned circuit because the capacitance of *C* is intentionally chosen to have low reactance (compared with the impedance of the tuned circuit) at the radio frequency. The rf current cannot flow through the dc supply because the inductance of *RFC* is intentionally made so large that it has a very high reactance at the radio frequency. The resistance of *RFC*, however, is too low to have an appreciable effect on the flow of direct current. The two currents are thus in *parallel*, hence the name parallel feed.

Either type of feed may be used for both af and rf circuits. In parallel feed there is no dc voltage on the ac circuit, a desirable feature from the viewpoint of safety to the operator, because the voltages applied to tubes – particularly transmitting tubes – are dangerous. On the other hand, it is somewhat difficult to make an rf choke work well over a wide range of frequencies. Series feed is often preferred, therefore, because it is relatively easy to keep the impedance between the ac circuit and the tube low.

Bypassing

In the series-feed circuit just discussed, it was assumed that the dc supply had very low impedance at radio frequencies. This is not likely to be true in a practical power supply, partly because the normal physical separation between the supply and the rf circuit would make it necessary to use rather

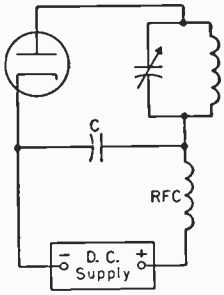

Fig. 2-58 – Typical use of a bypass capacitor and rf choke in a series-feed circuit.

long connecting wires or leads. At radio frequencies, even a few feet of wire can have fairly large reactance – too large to be considered a really "low-impedance" connection.

An actual circuit would be provided with a bypass capacitor, as shown in Fig. 2-58. Capacitor *C* is chosen to have low reactance at the operating frequency, and is installed right in the circuit where it can be wired to the other parts with quite short connecting wires. Hence the rf current will tend to flow through it rather than through the dc supply.

To be effective, the reactance of the bypass capacitor should not be more than one-tenth of the impedance of the bypassed part of the circuit. Very often the latter impedance is not known, in which case it is desirable to use the largest capacitance in the bypass that circumstances permit. To make doubly sure that rf current will not flow through a non-rf circuit such as a power supply, an rf choke may be connected in the lead to the latter, as shown in Fig. 2-58.

The same type of bypassing is used when audio frequencies are present in addition to rf. Because the reactance of a capacitor changes with frequency, it is readily possible to choose a capacitance that will represent a very low reactance at radio frequencies but that will have such high reactance at audio frequencies that it is practically an open circuit. A capacitance of .001 μF is practically a short circuit for rf, for example, but is almost an open circuit at audio frequencies. (The actual value of capacitance that is usable will be modified by the impedances concerned.) Capacitors also are used in audio circuits to carry the audio frequencies around a dc supply.

Distributed Capacitance and Inductance

In the discussions earlier in this chapter it was assumed that a capacitor has only capacitance and that an inductor has only inductance. Unfortunately, this is not strictly true. There is always a certain amount of inductance in a conductor of any length, and a capacitor is bound to have a little inductance in addition to its intended capacitance. Also, there is always capacitance between two conductors or between parts of the same conductor, and thus there is appreciable capacitance between the turns of an inductance coil.

This distributed inductance in a capacitor and the distributed capacitance in an inductor have important practical effects. Actually, every capacitor is in effect a series-tuned circuit, resonant at the frequency where its capacitance and inductance have the same reactance. Similarly, every inductor is in effect a parallel tuned circuit, resonant at the frequency where its inductance and distributed capacitance have the same reactance. At frequencies well below these natural resonances, the capacitor will act like a capacitance and the coil will act like an inductor. Near the natural resonance points, the inductor will have its highest impedance and the capacitor will have its lowest impedance. At frequencies above resonance, the capacitor acts like an inductor and the inductor acts like a capacitor. Thus there is a limit to the amount of capacitance that can be used at a given frequency. There is a similar limit to the inductance that can be used. At audio frequencies, capacitances measured in microfarads and inductances measured in henrys are practicable. At low and medium radio frequencies, inductances of a few mH and capacitances of a few thousand pF are the largest practicable. At high radio frequencies, usable inductance values drop to a few μH and capacitances to a few hundred pF.

Distributed capacitance and inductance are important not only in rf tuned circuits, but in bypassing a choking as well. It will be appreciated that a bypass capacitor that actually acts like an inductance, or an rf choke that acts like a low-reactance capacitor, cannot work as it is intended they should.

Grounds

Throughout this book there are frequent references to ground and ground potential. When a connection is said to be "grounded" it does not necessarily mean that it actually goes to earth. What it means that an actual earth connection to that point in the circuit should not disturb the operation of the circuit in any way. The term also is used to indicate a "common" point in the circuit where power supplies and metallic supports (such as a metal chassis) are electrically tied together. It is general practice, for example, to "ground" the filament or heater power supplies for vacuum tubes. Since the cathode of a vacuum tube is a junction point for grid and plate voltage supplies, and since the various circuits connected to the tube elements have at least one point connected to cathode, these points also are "returned to ground." Ground is therefore a common reference point in the radio circuit. "Ground potential" means that there is no "difference of potential" – no voltage – between the circuit point and the earth.

Single-Ended and Balanced Circuits

With reference to ground, a circuit may be either single-ended (unbalanced) or balanced. In a single-ended circuit, one side of the circuit (the cold side) is connected to ground. In a blanced circuit, the electrical midpoint is connected to ground, so that the circuit has two "hot" ends each at the same voltage "above" ground.

Typical single-ended and balanced circuits are shown in Fig. 2-59. Rf circuits are shown in the

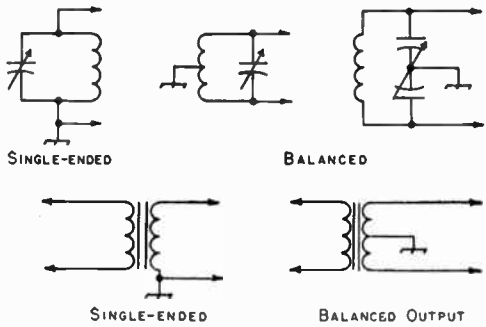

Fig. 2-59 — Single-ended and balanced circuits.

upper row, while iron-core transformers (such as are used in power-supply and audio circuits) are shown in the lower row. The rf circuits may be balanced either by connecting the center of the coil to ground or by using a "balanced" or "split-stator" capacitor and connecting its rotor to rf ground. In the iron-core transformer, one or both windings may be tapped at the center of the winding to provide the ground connection.

Shielding

Two circuits that are physically near each other usually will be coupled to each other in some degree even though no coupling is intended. The metallic parts of the two circuits form a small capacitance through which energy can be transferred by means of the electric field. Also, the magnetic field about the coil or wiring of one circuit can couple that circuit to a second through the latter's coil and wiring. In many cases these unwanted couplings must be prevented if the circuits are to work properly.

Capacitive coupling may readily be prevented by enclosing one or both of the circuits in grounded low-resistance metallic containers, called shields. The electric field from the circuit components does not penetrate the shield. A metallic plate, called a baffle shield, inserted between two components also may suffice to prevent electrostatic coupling between them. It should be large enough to make the components invisible to each other.

Similar metallic shielding is used at radio frequencies to prevent magnetic coupling. The shielding effect for magnetic fields increases with frequency and with the conductivity and thickness of the shielding material.

A closed shield is required for good magnetic shielding; in some cases separate shields, one about each coil, may be required. The baffle shield is rather ineffective for magnetic shielding, although it will give partial shielding if placed at right angles to the axes of, and between, the coils to be shielded from each other.

Shielding a coil reduces its inductance, because part of its field is canceled by the shield. Also, there is always a small amount of resistance in the shield, and there is therefore an energy loss. This loss raises the effective resistance of the coil. The decrease in inductance and increase in resistance lower the Q of the coil, but the reduction in inductance and Q will be small if the spacing between the sides of the coil and the shield is at least half the coil diameter, and if the spacing at the ends of the coil is at least equal to the coil diameter. The higher the conductivity of the shield material, the less the effect on the inductance and Q. Copper is the best material, but aluminum is quite satisfactory.

For good magnetic shielding at audio frequencies it is necessary to enclose the coil in a container of high-permeability iron or steel. In this case the shield can be quite close to the coil without harming its performance.

UHF CIRCUITS

RESONANT LINES

In resonant circuits as employed at the lower frequencies it is possible to consider each of the reactance components as a separate entity. The fact that an inductor has a certain amount of self-capacitance, as well as some resistance, while a capacitor also possesses a small self-inductance, can usually be disregarded.

At the very-high and ultrahigh frequencies it is not readily possible to separate these components. Also, the connecting leads, which at lower frequencies would serve merely to join the capacitor and coil, now may have more inductance than the coil itself. The required inductance coil may be no more than a single turn of wire, yet even this single turn may have dimensions comparable to a wavelength at the operating frequency. Thus the energy in the field surrounding the "coil" may in part be radiated. At a sufficiently high frequency the loss by radiation may represent a major portion of the total energy in the circuit.

For these reasons it is common practice to utilize resonant sections of transmission line as tuned circuits at frequencies above 100 MHz or so.

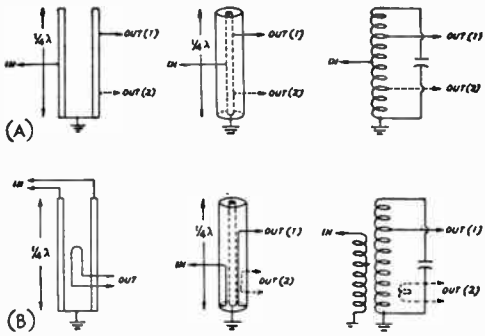

Fig. 2-60 — Equivalent coupling circuits for parallel-line, coaxial-line and conventional resonant circuits.

A quarter-wavelength line, or any odd multiple thereof, shorted at one end and open at the other exhibits large standing waves, as described in the section on transmission lines. When a voltage of the frequency at which such a line is resonant is applied to the open end, the response is very similar to that of a parallel resonant circuit. The equivalent relationships are shown in Fig. 2-60. At frequencies off resonance the line displays qualities comparable with the inductive and capacitive reactances of a conventional tuned circuit, so sections of transmission line can be used in much the same manner as inductors and capacitors.

To minimize radiation loss the two conductors of a parallel-conductor line should not be more than about one-tenth wavelength apart, the spacing being measured between the conductor axes. On the other hand, the spacing should not be less than about twice the conductor diameter because of "proximity effect," which causes eddy currents and an increase in loss. Above 300 MHz it is difficult to satisfy both these requirements simultaneously, and the radiation from an open line tends to become excessive, reducing the Q. In such case the coaxial type of line is to be preferred, since it is inherently shielded.

Representative methods for adjusting coaxial lines to resonance are shown in Fig. 2-61. At the left, a sliding shorting disk is used to reduce the effective length of the line by altering the position of the short-circuit. In the center, the same effect is accomplished by using a telescoping tube in the end of the inner conductor to vary its length and thereby the effective length of the line. At the right, two possible methods of using parallel-plate capacitors are illustrated. The arrangement with the loading capacitor at the open end of the line has the greatest tuning effect per unit of capacitance; the alternative method, which is equivalent to tapping the capacitor down on the line, has less effect on the Q of the circuit. Lines with capacitive "loading" of the sort illustrated will be shorter, physically, than unloaded lines resonant at the same frequency.

Two methods of tuning parallel-conductor lines are shown in Fig. 2-62. The sliding short-circuiting strap can be tightened by means of screws and nuts to make good electrical contact. The parallel-plate capacitor in the second drawing may be placed anywhere along the line, the tuning effect becoming less as the capacitor is located nearer the shorted end of the line. Although a low-capacitance variable capacitor of ordinary construction can be used, the circular-plate type shown is symmetrical and thus does not unbalance the line. It also has the further advantage that no insulating material is required.

WAVEGUIDES

A waveguide is a conducting tube through which energy is transmitted in the form of electromagnetic waves. The tube is not considered as carrying a current in the same sense that the wires of a two-conductor line do, but rather as a *boundary* which confines the waves to the enclosed space. Skin effect prevents any electromagnetic effects from being evident outside the guide. The energy is injected at one end, either through capacitive or inductive coupling or by radiation, and is received at the other end. The waveguide then merely confines the energy of the fields, which are propagated through it to the receiving end by means of reflections against its inner walls.

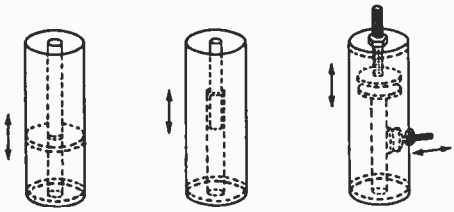

Fig. 2-61 — Methods of tuning coaxial resonant lines.

Analysis of waveguide operation is based on the assumption that the guide material is a perfect conductor of electricity. Typical distributions of electric and magnetic fields in a rectangular guide are shown in Fig. 2-63. It will be observed that the intensity of the electric field is greatest (as indicated by closer spacing of the lines of force) at the center along the x dimension, Fig. 2-63(B), diminishing to zero at the end walls. The latter is a necessary condition, since the existence of any electric field parallel to the walls at the surface would cause an infinite current to flow in a perfect conductor. This represents an impossible situation.

Modes of Propagation

Fig. 2-63 represents a relatively simple distribution of the electric and magnetic fields. There is in general an infinite number of ways in which the fields can arrange themselves in a guide so long as there is no upper limit to the frequency to be transmitted. Each field configuration is called a mode. All modes may be separated into two general groups. One group, designated *TM* (transverse magnetic), has the magnetic field entirely transverse to the direction of propagation, but has a component of electric field in that direction. The other type, designated *TE* (transverse electric) has the electric field entirely transverse, but has a component of magnetic field in the direction of propagation. *TM* waves are sometimes called *E* waves, and *TE* waves are sometimes called *H* waves, but the *TM* and *TE* designations are preferred.

The particular mode of transmission is identified by the group letters followed by two subscript

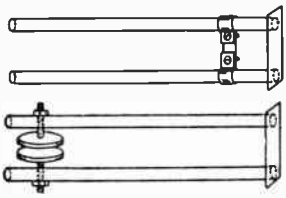

Fig. 2-62 — Methods of tuning parallel-type resonant lines.

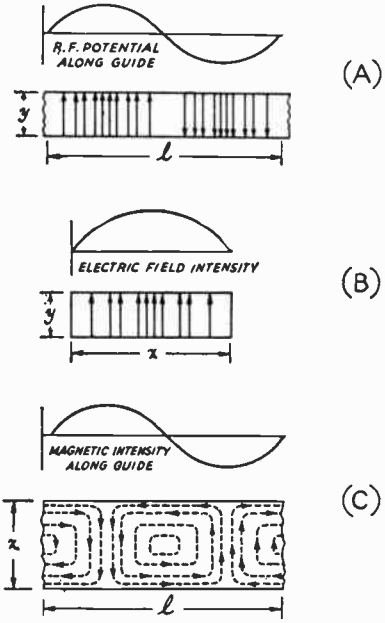

Fig. 2-63 — Field distribution in a rectangular waveguide. The $TE_{1,0}$ mode of propagation is depicted.

numerals; for example, $TE_{1,0}$, $TM_{1,1}$, etc. The number of possible modes increases with frequency for a given size of guide. There is only one possible mode (called the dominant mode) for the lowest frequency that can be transmitted. The dominant mode is the one generally used in practical work.

Waveguide Dimensions

In the rectangular guide the critical dimension is x in Fig. 2-63; this dimension must be more than one-half wavelength at the lowest frequency to be transmitted. In practice, the y dimension usually is made about equal to $1/2x$ to avoid the possibility of operation at other than the dominant mode.

Other cross-sectional shapes than the rectangle can be used, the most important being the circular pipe. Much the same considerations apply as in the rectangular case.

Wavelength formulas for rectangular and circular guides are given in the following table, where x is the width of a rectangular guide and r is the radius of a circular guide. All figures are in terms of the dominant mode.

	Rectangular	*Circular*
Cutoff wavelength	$2x$	$3.41r$
Longest wavelength transmitted with little attenuation	$1.6r$	$3.2r$
Shortest wavelength before next mode becomes possible	$1.1x$	$2.8r$

Cavity Resonators

Another kind of circuit particularly applicable at wavelengths of the order of centimeters is the cavity resonator, which may be looked upon as a section of a waveguide with the dimensions chosen so that waves of a given length can be maintained inside.

Typical shapes used for resonators are the cylinder, the rectangular box and the sphere, as shown in Fig. 2-64. The resonant frequency depends upon the dimensions of the cavity and the mode of oscillation of the waves (comparable to the transmission modes in a waveguide). For the lowest modes the resonant wavelengths are as follows:

Cylinder	$2.61r$
Square box	$1.41l$
Sphere	$2.28r$

The resonant wavelengths of the cylinder and square box are independent of the height when the height is less than a half wavelength. In other modes of oscillation the height must be a multiple of a half wavelength as measured inside the cavity. A cylindrical cavity can be tuned by a sliding shorting disk when operating in such a mode. Other tuning methods include placing adjustable tuning paddles or "slugs" inside the cavity so that the standing-wave pattern of the electric and magnetic fields can be varied.

A form of cavity resonator in practical use is the re-entrant cylindrical type shown in Fig. 2-65. In construction it resembles a concentric line closed at both ends with capacitive loading at the top, but the actual mode of oscillation may differ considerably from that occuring in coaxial lines. The resonant frequency of such a cavity depends upon the diameters of the two cylinders and the distance d between the cylinder ends.

Compared with ordinary resonant circuits, cavity resonators have extremely high Q. A value of Q of the order of 1000 or more is readily obtainable, and Q values of several thousand can be secured with good design and construction.

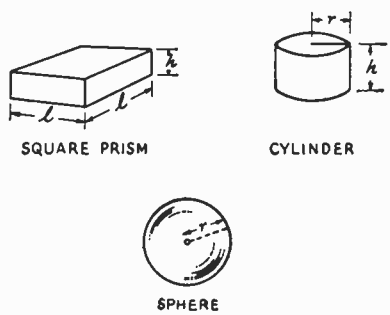

Fig. 2-64 — Forms of cavity resonators.

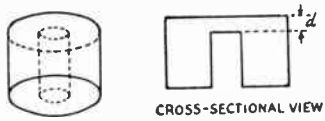

Fig. 2-65 — Re-entrant cylindrical cavity resonator.

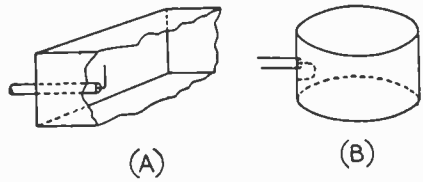

Fig. 2-66 — Coupling to waveguides and resonators.

Coupling to Waveguides and Cavity Resonators

Energy may be introduced into or abstracted from a waveguide or resonator by means of either the electric or magnetic field. The energy transfer frequently is through a coaxial line, two methods of coupling to which are shown in Fig. 2-66. The probe shown at A is simply a short extension of the inner conductor of the coaxial line, so oriented that it is parallel to the electric lines of force. The loop shown at B is arranged so that it encloses some of the magnetic lines of force. The point at which maximum coupling will be secured depends upon the particular mode of propagation in the guide or cavity; the coupling will be maximum when the coupling device is in the most intense field.

Coupling can be varied by turning the probe or loop through a 90-degree angle. When the probe is perpendicular to the electric lines the coupling will be minimum; similarly, when the plane of the loop is parallel to the magnetic lines the coupling will have its minimum value.

MODULATION, HETERODYNING, AND BEATS

Since one of the most widespread uses of radio frequencies is the transmission of speech and music, it would be very convenient if the audio spectrum to be transmitted could simply be shifted up to some radio frequency, transmitted as radio waves, and shifted back down to audio at the receiving point. Suppose the audio signal to be transmitted by radio is a pure 1000-hertz tone, and we wish to transmit the signal at 1 MHz (1,000,000 hertz. One possible way to do this might be to add 1.000 MHz and 1 kHz together, thereby obtaining a radio frequency of 1.001 MHz. No simple method for doing this directly has been devised, although the *effect* is obtained and used in "single-sideband transmission."

When two different frequencies are present simultaneously in an ordinary circuit (specifically, one in which Ohm's Law holds) each behaves as though the other were not there. The total or resultant voltage (or current) in the circuit will be the sum of the instantaneous values of the two at every instant. This is because there can be only one value of current or voltage at any single point in a circuit at any instant. Figs. 2-67A and B show two such frequencies, and C shows the resultant. The amplitude of the 1-MHz current is not affected by the presence of the 1-kHz current, but the axis is shifted back and forth at the 1-kHz rate. An attempt to transmit such a combination as a radio wave would result in only the radiation of the

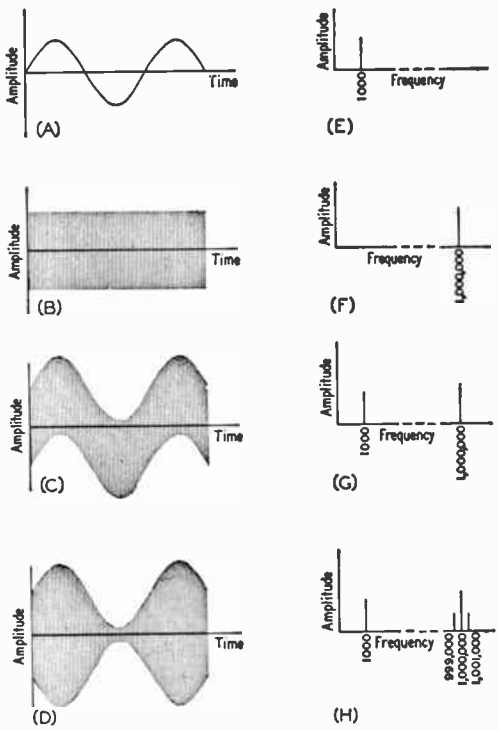

Fig. 2-67 — Amplitude-vs.-time and amplitude-vs.-frequency plots of various signals. (A) 1-1/2 cycles of an audio signal, assumed to be 1000 hz in this example. (B) A radio-frequency signal, assumed to be 1 MHz; 1500 hertz are completed during the same time as the 1-1/2 cycles in A, so they cannot be shown accurately. (C) The signals of A and B in the same circuit; each maintains its own identity. (D) The signals of A and B in a circuit where the amplitude of A can control the amplitude of B. The 1-MHz signal is modulated by the 1000-hz signal.

E, F, G and H show the spectrums for the signals in A, B, C and D, respectively. Note the new frequencies in H, resulting from the modulation process.

1-MHz frequency, since the 1-kHz frequency retains its identity as an audio frequency and will not radiate.

There are devices, however, which make it possible for one frequency to control the amplitude of the other. If, for example, a 1-kHz tone is used to control a 1-MHz signal, the maximum rf output will be obtained when the 1-kHz signal is at the peak of one alternation and the minimum will occur at the peak of the next alternation. The process is called amplitude modulation, and the effect is shown in Fig. 2-67D. The resultant signal is now entirely at radio frequency, but with its amplitude varying at the modulation rate (1 kHz). Receiving equipment adjusted to receive the 1-MHz rf signal can reproduce these changes in amplitude, and reveal what the audio signal is, through a process called detection.

It might be assumed that the only radio frequency present in such a signal is the original 1.000 MHz, but such is not the case. Two new frequencies have appeared. These are the sum (1.00 + .001) and the difference (1.000 – .001) of the two, and thus the radio frequencies appearing after modulation are 1.001, 1.000 and .999 MHz.

When an audio frequency is used to control the amplitude of a radio frequency, the process is generally called "amplitude modulation," as mentioned, but when a radio frequency modulates another radio frequency it is called heterodyning. The processes are identical. A general term for the sum and difference frequencies generated during heterodyning or amplitude modulation is "beat frequencies," and a more specific one is upper side frequency, for the sum, and lower side frequency for the difference.

In the simple example, the modulating signal was assumed to be a pure tone, but the modulating signal can just as well be a *band* of frequencies making up speech or music. In this case, the side frequencies are grouped into the upper sideband and the lower sideband. Fig. 2-67H shows the side frequencies appearing as a result of the modulation process.

Amplitude modulation (a-m) is not the only possible type nor is it the only one in use. Such signal properties as phase and frequency can also be modulated. In every case the modulation process leads to the generation of a new set (or sets) of radio frequencies symmetrically disposed about the original radio (carrier) frequency.

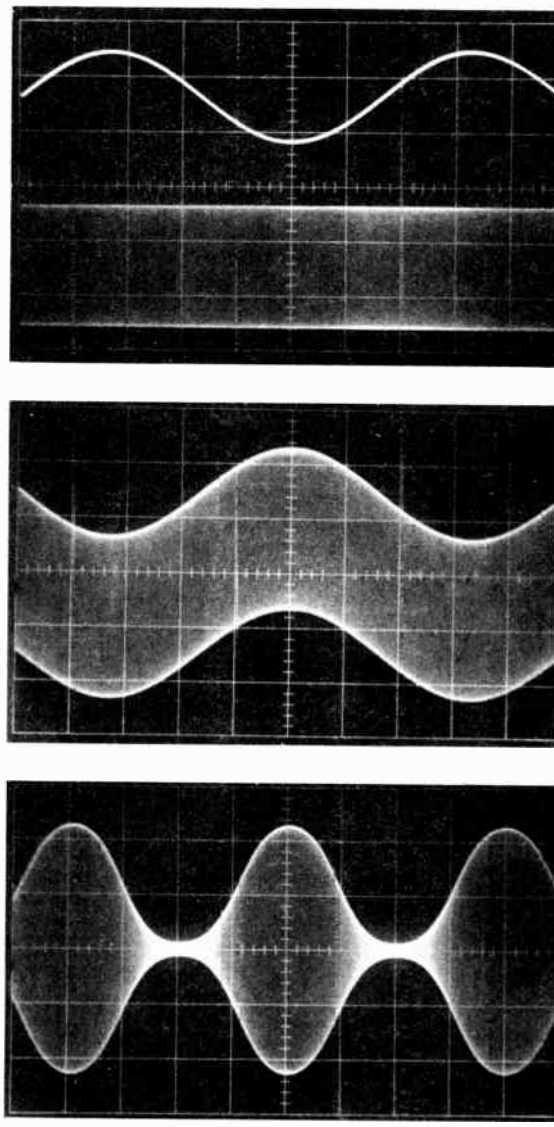

Fig. 2-68 – Actual oscilloscope photograph showing the signals described in the text and shown in the drawings of Fig. 2-67.

Chapter 3

Vacuum-Tube Principles

CURRENT IN A VACUUM

The outstanding difference between the vacuum tube and most other electrical devices is that the electric current does not flow through a conductor but through empty space – a vacuum. This is only possible when "free" electrons – that is, electrons that are not attached to atoms – are somehow introduced into the vacuum. Free electrons in an evacuated space will be attracted to a positively charged object within the same space, or will be repelled by a negatively charged object. The movement of the electrons under the attraction or repulsion of such charged objects constitutes the current in the vacuum.

The most practical way to introduce a sufficiently large number of electrons into the evacuated space is by thermionic emission.

Thermionic Emission

If a piece of metal is heated to incandescence in a vacuum, electrons near the surface are given enough energy of motion to fly off into the surrounding space. The higher the temperature, the greater the number of electrons emitted. The name for the emitting metal is cathode.

If the cathode is the only thing in the vacuum, most of the emitted electrons stay in its immediate vicinity, forming a "cloud" about the cathode. The reason for this is that the electrons in the space, being negative electricity, for a negative charge (space charge) in the region of the cathode. The space charge repels those electrons nearest the cathode, tending to make them fall back on it.

Transmitting tubes are in the back and center rows. Receiving tubes are in the front row (l. to r.): miniature, pencil, planar triode (two), Nuvistor and 1-inch diameter cathode-ray tube.

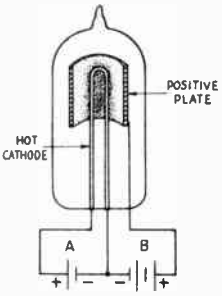

Fig. 3-1 — Conduction by thermionic emission in a vacuum tube. The A battery is used to heat the cathode to a temperature that will cause it to emit electrons. The B battery makes the plate positive with respect to the cathode, thereby causing the emitted electrons to be attracted to the plate. Electrons captured by the plate flow back through the B battery to the cathode.

Now suppose a second conductor is introduced into the vacuum, but not connected to anything else inside the tube. If this second conductor is given a positive charge by connecting a voltage source between it and the cathode, as indicated in Fig. 3-1, electrons emitted by the cathode are attracted to the positively charged conductor. An electric current then flows through the circuit formed by the cathode, the charged conductor, and the voltage source. In Fig. 3-1 this voltage source is a battery ("B" battery); a second battery ("A" battery) is also indicated for heating the cathode to the proper operating temperature.

The positively charged conductor is usually a metal plate or cylinder (surrounding the cathode) and is called an **anode** or **plate**. Like the other working parts of a tube, it is a tube element or electrode. The tube shown in Fig. 3-1 is a two-element or two-electrode tube, one element being the cathode and the other the anode or plate.

Since electrons are negative electricity, they will be attracted to the plate *only* when the plate is positive with respect to the cathode. If the plate is given a negative charge, the electrons will be repelled back to the cathode and no current will flow. The vacuum tube therefore can conduct *only in one direction.*

Cathodes

Before electron emission can occur, the cathode must be heated to a high temperature. However, it is not essential that the heating current flow

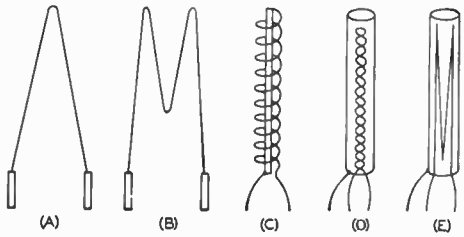

Fig. 3-2 — Types of cathode construction. Directly heated cathodes or "filaments" are shown at A, B, and C. The inverted V filament is used in small receiving tubes, the M in both receiving and transmitting tubes. The spiral filament is a transmitting tube type. The indirectly heated cathodes at D and E show two types of heater construction, one a twisted loop and the other bunched heater wires. Both types tend to cancel the magnetic fields set up by the current through the heater.

through the actual material that does the emitting; the filament or heater can be electrically separate from the emitting cathode. Such a cathode is called indirectly heated, while an emitting filament is called a directly heated cathode. Fig. 3-2 shows both types in the forms which they commonly take.

Much greater electron emission can be obtained, at relatively low temperatures, by using special cathode materials rather than pure metals. One of these is thoriated tungsten or tungsten in which thorium is dissolved. Still greater efficiency is achieved in the oxide-coated cathode, a cathode in which rare-earth oxides form a coating over a metal base.

Although the oxide-coated cathode has the highest efficiency, it can be used successfully only in tubes that operate at rather low plate voltages. Its use is therefore confined to receiving-type tubes and to the smaller varieties of transmitting tubes. The thoriated filament, on the other hand, will operate well in high-voltage tubes.

Plate Current

If there is only a small positive voltage on the plate, the number of electrons reaching it will be small because the space charge (which is negative) prevents those electrons nearest the cathode from being attracted to the plate. As the plate voltage is increased, the effect of the space charge is increasingly overcome and the number of electrons attracted to the plate becomes larger. That is, the plate current increases with increasing plate voltage.

Fig. 3-3 shows a typical plot of plate current *vs.* plate voltage for a two-element tube or diode. A curve of this type can be obtained with the circuit shown, if the plate voltage is increased in small steps and a current reading taken (by means of the current-indicating instrument — a milliammeter) at each voltage. The plate current is zero with no plate voltage and the curve rises until a saturation point is reached. This is where the positive charge on the plate has substantially overcome the space charge and almost all the electrons are going to the plate. At higher voltages the plate current stays at practically the same value.

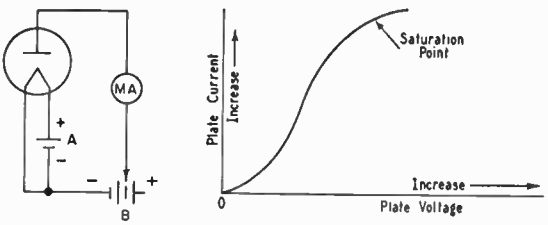

Fig. 3-3 — The diode, or two-element tube, and a typical curve showing how the plate current depends upon the voltage applied to the plate.

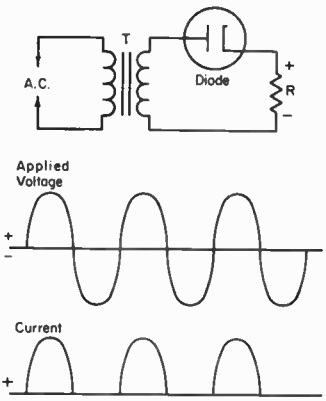

Fig. 3-4 — Rectification in a diode. Current flows only when the plate is positive with respect to the cathode, so that only half-cycles of current flow through the load resistor, *R*.

The plate voltage multiplied by the plate current is the power input to the tube. In a circuit like that of Fig. 3-3 this power is all used in heating the plate. If the power input is large, the plate temperature may rise to a very high value (the plate may become red or even white hot). The heat developed in the plate is radiated to the bulb of the tube, and in turn radiated by the bulb to the surrounding air.

RECTIFICATION

Since current can flow through a tube in only one direction, a diode can be used to change alternating current into direct current. It does this by permitting current to flow only when the anode is positive with respect to the cathode. There is no current flow when the plate is negative.

Fig. 3-4 shows a representative circuit. Alternating voltage from the secondary of the transformer, *T*, is applied to the diode tube in series with a load resistor, *R*. The voltage varies as is usual with ac, but current flows through the tube and *R* only when the plate is positive with respect to the cathode — that is, during the half-cycle when the upper end of the transformer winding is positive. During the negative half-cycle there is simply a gap in the current flow. This rectified alternating

current therefore is an *intermittent* direct current.

The load resistor, R, represents the actual circuit in which the rectified alternating current does work. All tubes work with a load of one type or another; in this respect a tube is much like a generator or transformer. A circuit that did not provide a load for the tube would be like a short-circuit across a transformer; no useful purpose would be accomplished and the only result would be the generation of heat in the transformer. So it is with vacuum tubes; they must cause power to be developed in a load in order to serve a useful purpose. Also, to be *efficient* most of the power must do useful work in the load and not be used in heating the plate of the tube. Thus the voltage drop across the load should be much higher than the drop across the diode.

With the diode connected as shown in Fig. 3-4, the polarity of the current through the load is as indicated. If the diode were reversed, the polarity of the voltage developed across the load R would be reversed.

VACUUM-TUBE AMPLIFIERS

TRIODES

Grid Control

If a third element – called the control grid, or simply grid – is inserted between the cathode and plate as in Fig. 3-5, it can be used to control the effect of the space charge. If the grid is given a positive voltage with respect to the cathode, the positive charge will tend to neutralize the negative space charge. The result is that, at any selected plate voltage, more electrons will flow to the plate than if the grid were not present. On the other hand, if the grid is made negative with respect to the cathode the negative charge on the grid will add to the space charge. This will reduce the number of electrons that can reach the plate at any selected plate voltage.

The grid is inserted in the tube to control the space charge and not to attract electrons to itself, so it is made in the form of a wire mesh or spiral. Electrons then can go through the open spaces in the grid to reach the plate.

Characteristic Curves

For any particular tube, the effect of the grid voltage on the plate current can be shown by a set of characteristic curves. A typical set of curves is shown in Fig. 3-6, together with the circuit that is used for getting them. For each value of plate voltage, there is a value of negative grid voltage that will reduce the plate current to zero; that is, there is a value of negative grid voltage that will cut off the plate current.

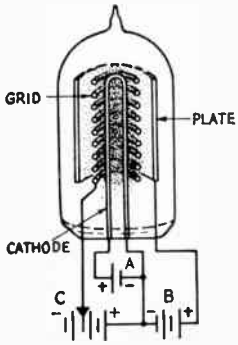

Fig. 3-5 – Construction of an elementary triode vacuum tube, showing the directly-heated cathode (filament), grid (with an end view of the grid wires) and plate. The relative density of the space charge is indicated roughly by the dot density.

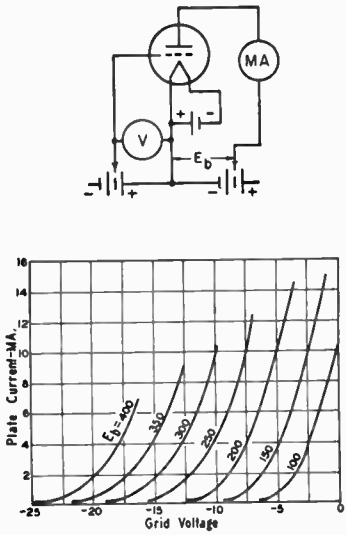

Fig. 3-6 – Grid-voltage-vs.-plate-current curves at various fixed values of plate voltage (E_b) for a typical small triode. Characteristic curves of this type can be taken by varying the battery voltages in the circuit at the right.

The curves could be extended by making the grid voltage positive as well as negative. When the grid is negative, it repels electrons and therefore none of them reaches it; in other words, no current flows in the grid circuit. However, when the grid is positive, it attracts electrons and a current (grid current) flows, just as current flows to the positive plate. Whenever there is grid current there is an accompanying power loss in the grid circuit, but so long as the grid is negative no power is used.

It is obvious that the grid can act as a valve to control the flow of plate current. Actually, the grid has a much greater effect on plate current flow than does the plate voltage. A small change in grid voltage is just as effective in bringing about a given change in plate current as is a large change in plate voltage.

The fact that a small voltage acting on the grid is equivalent to a large voltage acting on the plate indicates the possibility of amplification with the

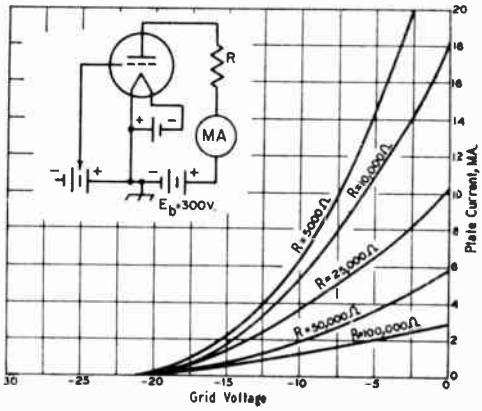

Fig. 3-7 — Dynamic characteristics of a small triode with various load resistances from 5000 to 100,000 ohms.

triode tube. The many uses of the electronic tube nearly all are based upon this amplifying feature. The amplified output is not obtained from the tube itself, but from the voltage source connected between its plate and cathode. The tube simply controls the power from this source, changing it to the desired form.

To utilize the controlled power, a load must be connected in the plate or "output" circuit, just as in the diode case. The load may be either a resistance or an impedance. The term "impedance" is frequently used even when the load is purely resistive.

Tube Characteristics

The physical construction of a triode determines the relative effectiveness of the grid and plate in controlling the plate current. The control of the grid is increased by moving it closer to the cathode or by making the grid mesh finer.

The plate resistance of a vacuum tube is the ac resistance of the path from cathode to plate. For a given grid voltage, it is the quotient of a small change in plate voltage divided by the resultant change in plate current. Thus if a 1-volt change in plate voltage caused a plate-current change of .01 mA (.00001 ampere), the plate resistance would be 100,000 ohms.

The amplification factor (usually designated by the Greek letter μ) of a vacuum tube is defined as the ratio of the change in plate voltage to the change in grid voltage to effect equal changes in plate current. If, for example, an increase of 10 plate volts raised the plate current 1.0 mA, and an increase in (negative) grid voltage of 0.1 volt were required to return the plate current to its original value, the amplification factors of triode tubes would be 100. The amplification factors of triode tubes range from 3 to 100 or so. A high-μ tube is one with an amplification of perhaps 30 or more, medium-μ tubes have amplification factors in the approximate range 8 to 30 and low-μ tubes in the range below 7 or 8. The μ of a triode is useful in computing stage gains.

The best all-around indication of the effectiveness of a tube as an amplifier is its grid-plate transconductance – also called mutual conductance or g_m. It is the change in plate current divided by the change in grid voltage that caused the change; it can be found by dividing the amplification factor by the plate resistance. Since current divided by voltage is conductance, transconductance is measured in the unit of conductance, the mho.

Practical values of transconductance are very small, so the micromho (one millionth of a mho) is the commonly used unit. Different types of tubes have transconductances ranging from a few hundred to several thousand. The higher the transconductance the greater the posible amplification.

AMPLIFICATION

The way in which a tube amplifies is best known by a type of graph called the dynamic characteristic. Such a graph, together with the circuit used for obtaining it, is shown in Fig. 3-7. The curves are taken with the plate-supply voltage fixed at the desired operating value. The difference between this circuit and the one shown in Fig. 3-6 is that in Fig. 3-7 a load resistance is connected in series with the plate of the tube. Fig. 3-7 thus shows how the plate current will vary, with different grid voltages, when the plate current is made to flow through a load and thus do useful work.

The several curves in Fig. 3-7 are for various values of load resistance. When the resistance is small (as in the case of the 5000-ohm load) the plate current changes rather rapidly with a given change in grid voltage. If the load resistance is high (as in the 100,000-ohm curve), the change in plate current for the same grid-voltage change is relatively small; also, the curve tends to be straighter.

Fig. 3-8 is the same type of curve, but with the circuit arranged so that a source of alternating voltage (signal) is inserted between the grid and the grid battery ("C" battery). The voltage of the grid battery is fixed at −5 volts, and from the curve it is seen that the plate current at this grid voltage is 2 milliamperes. This current flows when the load resistance is 50,000 ohms, as indicated in the circuit diagram. If there is no ac signal in the grid circuit, the voltage drop in the load resistor is 50,000 × .002 = 100 volts, leaving 200 volts between the plate and cathode.

When a sine-wave signal having a peak value of 2 volts is applied in series with the bias voltage in the grid circuit, the instantaneous voltage at the grid will swing to −3 volts at the instant the signal reaches its positive peak, and to −7 volts at the instant the signal reaches its negative peak. The maximum plate current will occur at the instant the grid voltage is −3 volts. As shown by the graph, it will have a value of 2.65 milliamperes. The minimum plate current occurs at the instant the grid voltage is −7 volts, and has a value of 1.35 mA. At intermediate values of grid voltage, intermdiate plate-current values will occur.

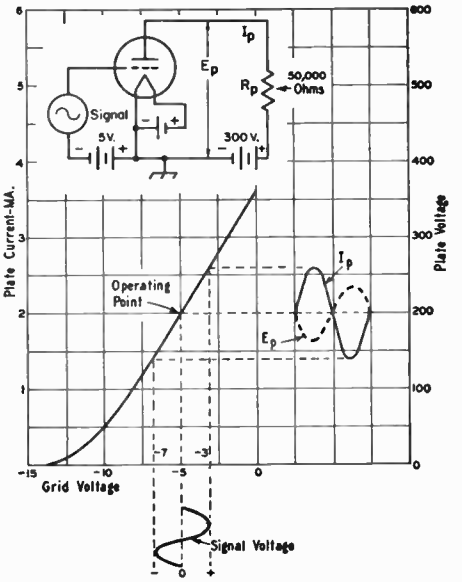

Fig. 3-8 — Amplifier operation. When the plate current varies in response to the signal applied to the grid, a varying voltage drop appears across the load, R_p, as shown by the dashed curve. E_p. I_p is the plate current.

The instantaneous voltage between the plate and cathode of the tube also is shown on the graph. When the plate current is maximum, the instantaneous voltage drop in R_p is 50,000 × .00265 = 132.5 volts; when the plate current is minimum the instantaneous voltage drop in R_p is 50,000 × .00135 = 67.5 volts. The actual voltage between plate and cathode is the difference between the plate-supply potential, 300 volts, and the voltage drop in the load resistance. The plate-to-cathode voltage is therefore 167.5 volts at maximum plate current and 232.5 volts at minimum plate current.

This varying plate voltage is an ac voltage superimposed on the steady plate-cathode potential of 200 volts (as previously determined for no-signal conditions). The peak value of this ac output voltage is the difference between either the maximum or minimum plate-cathode voltage and the no-signal value of 200 volts. In the illustration this difference is 232.5 – 200 or 200 – 167.5; that is, 32.5 volts in either case. Since the grid signal voltage has a peak value of 2 volts, the voltage-amplification ratio of the amplifier is 32.5/2 or 16.25. That is, approximately 16 times as much voltage is obtained from the plate circuit as is applied to the grid circuit.

As shown by the drawings in Fig. 3-8, the alternating component of the plate voltage swings in the *negative* direction (with reference to the no-signal value of plate-cathode voltage) when the grid voltage swings in the *positive* direction, and vice versa. This means that the alternating component of plate voltage (that is, the amplified signal) is 180 degrees out of phase with the signal voltage on the grid.

Bias

The fixed negative grid voltage (called grid bias) in Fig. 3-8 serves a very useful purpose. One object of the type of amplification shown in this drawing is to obtain, from the plate circuit, an alternating voltage that has the same wave shape as the signal voltage applied to the grid. To do so, an operating point on the straight part of the curve must be selected. The curve must be straight in both directions from the operating point at least far enough to accommodate the maximum value of the signal applied to the grid. If the grid signal swings the plate current back and forth over a part of the curve that is not straight, as in Fig. 3-9, the shape of the ac wave in the plate circuit will not be the same as the shape of the grid-signal wave. In such a case the output wave shape will be distorted.

A second reason for using negative grid bias is that any signal whose peak positive voltage does not exceed the fixed negative voltage on the grid cannot cause grid current to flow. With no current flow there is no power consumption, so the tube will amplify without taking any power from the signal source. (However, if the positive peak of the signal does exceed the negative bias, current will flow in the grid circuit during the time the grid is positive.)

Distortion of the output wave shape that results from working over a part of the curve that is not straight (that is, a nonlinear part of the curve) has the effect of transforming a sine-wave grid signal into a more complex waveform. As explained in an earlier chapter, a complex wave can be resolved into a fundamental and a series of harmonics. In other words, distortion from nonlinearity causes the generation of harmonic frequencies – frequencies that are not present in the signal applied to the

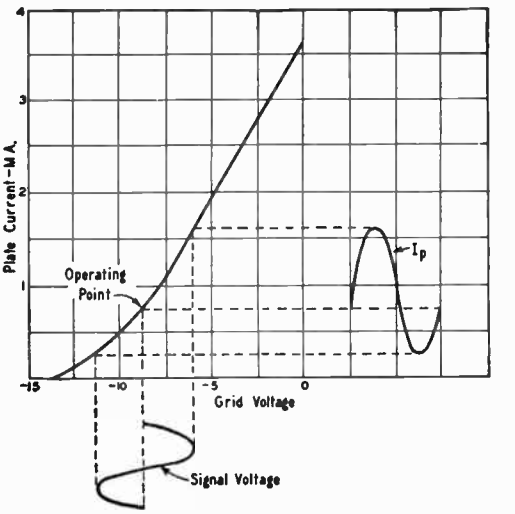

Fig. 3-9 — Harmonic distortion resulting from choice of an operating point on the curved part of the tube characteristic. The lower half-cycle of plate current does not have the same shape as the upper half-cycle.

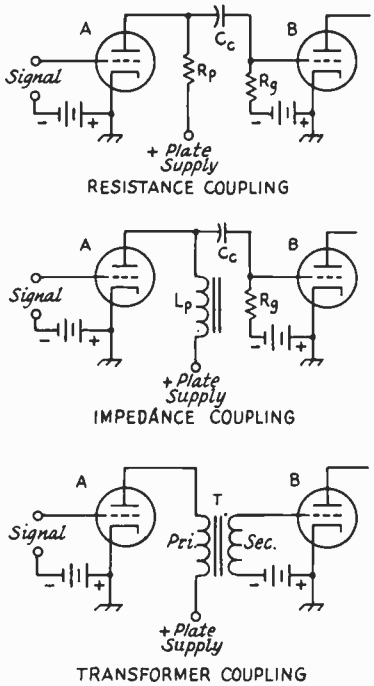

Fig. 3-10 — Three types of coupling are in common use at audio frequencies. These are resistance coupling, impedance coupling, and transformer coupling. In all three cases the output is shown coupled to the grid circuit of a subsequent amplifier tube, but the same types of circuits can be used to couple to other devices than tubes.

grid. Harmonic distortion is undesirable in most amplifiers, although there are occasions when harmonics are deliberately generated and used.

Audio Amplifier Output Circuits

The useful output of a vacuum-tube amplifier is the *alternating* component of plate current or plate voltage. The dc voltage on the plate of the tube is essential for the tube's operation, but it almost invariably would cause difficulties if it were applied, along with the ac output voltage, to the load. The output circuits of vacuum tubes are therefore arranged so that the ac is transferred to the load but the dc is not.

Three types of coupling are in common use at audio-frequencies. These are resistance coupling, impedance coupling, and transformer coupling. They are shown in Fig. 3-10. In all three cases the output is shown coupled to the grid circuit of a subsequent amplifier tube, but the same types of circuits can be used to couple to other devices than tubes.

In the resistance-coupled circuit, the ac voltage developed across the plate resistor R_p (that is, the ac voltage between the plate and cathode of the tube) is applied to a second resistor, R_g, through a coupling capacitor, C_c. The capacitor "blocks off" the dc voltage on the plate of the first tube and prevents it from being applied to the grid of tube *B*. The latter tube has negative grid bias supplied by the battery shown. No current flows on the grid circuit of tube *B* and there is therefore no dc voltage drop in R_g; in other words, the full voltage of the bias battery is applied to the grid of tube *B*.

The grid resistor R_g, usually has a rather high value (0.5 to 2 megohms). The reactance of the coupling capacitor, C_c, must be low enough compared with the resistance of R_g so that the ac voltage drop in C_c is negligible at the lowest frequency to be amplified. If R_g is at least 0.5 megohm, a 0.1-μF capacitor will be amply large for the usual range of audio frequencies.

So far as the alternating component of plate voltage is concerned, it will be realized that if the voltage drop in C_c is negligible then R_p and R_g are effectively in parallel (although they are quite separate so far as dc is concerned). The resultant parallel resistance of the two is therefore the actual load resistance for the tube. That is why R_g is made as high in resistance as possible; then it will have the least effect on the load represented by R_p.

The impedance-coupled circuit differs from that using resistance coupling only in the substitution of a high inductance (as high as several hundred henrys) for the plate resistor. The advantage of using an inductor rather than a resistor at this point is that the impedance of the inductor is high for audio frequencies, but its resistance is relatively low. Thus it provides a higher value of load impedance for ac without an excessive dc voltage drop, and consequently the power-supply voltage does not have to be high for effective operation.

The transformer-coupled amplifier uses a transformer with its primary connected in the plate circuit of the tube and its secondary connected to the load (in the circuit shown, a following amplifier). There is no direct connection between the two windings, so the plate voltage on tube *A* is isolated from the grid of tube *B*. The transformer-coupled amplifier has the same advantage as the impedance-coupled circuit with respect to loss of dc voltage from the plate supply. Also, if the secondary has more turns than the primary, the output voltage will be "stepped up" in proportion to the turns ratio.

Resistance coupling is simple, inexpensive, and will give the same amount of amplification – or voltage gain – over a wide range of frequencies; it will give substantially the same amplification at any frequency in the audio range, for example. Impedance coupling will give somewhat more gain, with the same tube and same plate-supply voltage, than resistance coupling. However, it is not quite so good over a wide frequency range; it tends to "peak," or give maximum gain, over a comparatively narrow band of frequencies. With a good transformer the gain of a transformer-coupled amplifier can be kept fairly constant over the audio-frequency range. On the other hand, transformer coupling in voltage amplifiers (see below) is best suited to triodes having amplification factors of about 20 or less, for the reason that the primary inductance of a practicable transform-

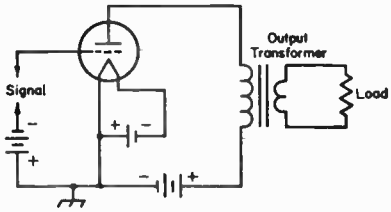

Fig. 3-11 — An elementary power-amplifier circuit in which the power-consuming load is coupled to the plate circuit through an impedance-matching transformer.

er cannot be made large enough to work well with a tube having high plate resistance.

Class A Amplifiers

An amplifier in which voltage gain is the primary consideration is called a **voltage amplifier**. Maximum voltage gain is secured when the load resistance or impedance is made as high as possible in comparison with the plate resistance of the tube. In such a case, the major portion of the voltage generated will appear across the load.

Voltage amplifiers belong to a group called **Class A amplifiers**. A Class A amplifier is one operated so that the wave shape of the output voltage is the same as that of the signal voltage applied to the grid. If a Class A amplifier is biased so that the grid is always negative, even with the largest signal to be handled by the grid, it is called a **Class A_1 amplifier**. Voltage amplifiers are always Class A_1 amplifiers, and their primary use is in driving a following Class A_1 amplifier.

Power Amplifiers

The end result of any amplification is that the amplified signal does some work. For example, an audio-frequency amplifier usually drives a loudspeaker that in turn produces sound waves. The greater the amount of af power supplied to the speaker the louder the sound it will produce.

Fig. 3-11 shows an elementary power-amplifier circuit. It is simply a transformer-coupled amplifier with the load connected to the secondary. Although the load is shown as a resistor, it actually would be some device, such as a loudspeaker, that employs the power usefully. Every power tube requires a specific value of load resistance from plate to cathode, usually some thousands of ohms, for optimum operation. The resistance of the actual load is rarely the right value for "matching" this optimum load resistance, so the transformer turns ratio is chosen to reflect the power value of resistance into the primary. The turns ratio may be either step-up or step-down, depending on whether the actual load resistance is higher or lower than the load the tube wants.

The **power-amplification ratio** of an amplifier is the ratio of the power output obtained from the plate circuit to the power required from the ac signal in the grid circuit. There is no power lost in the grid circuit of a Class A_1 amplifier, so such an amplifier has an infinitely large power-amplification ratio. However, it is quite possible to operate a Class A amplifier in such a way that current flows in its grid circuit during at least part of the cycle. In such a case power is used up in the grid circuit and the power amplification ratio is not infinite. A tube operated in this fashion is known as a **Class A_2 amplifier**. It is necessary to use a power amplifier to drive a Class A_2 amplifier, because a voltage amplifier cannot deliver power without serious distortion of the wave shape.

Another term used in connection with power amplifiers is **power sensitivity**. In the case of a Class A_1 amplifier, it means the ratio of power output to the grid signal voltage that causes it. If grid current flows, the term usually means the ratio of plate power output to grid power input.

The ac power that is delivered to a load by an amplifier tube has to be paid for in power taken from the source of plate voltage and current. In fact, there is always more power going into the plate circuit of the tube than is coming out as useful output. The difference between the input and output power is used up in heating the plate of the tube, as explained previously. The ratio of useful power output to dc plate input is called the **plate efficiency**. The higher the plate efficiency, the greater the amount of power that can be taken from a tube having a given plate-dissipation rating.

Parallel and Push-Pull

When it is necessary to obtain more power output than one tube is capable of giving, two or more similar tubes may be connected in **parallel**. In this case the similar elements in all tubes are connected together. This method is shown in Fig. 3-12 for a transformer-coupled amplifier. The power output is in proportion to the number of tubes used; the grid signal or exciting voltage required, however, is the same as for one tube.

If the amplifier operates in such a way as to consume power in the grid circuit, the grid power required is in proportion to the number of tubes used.

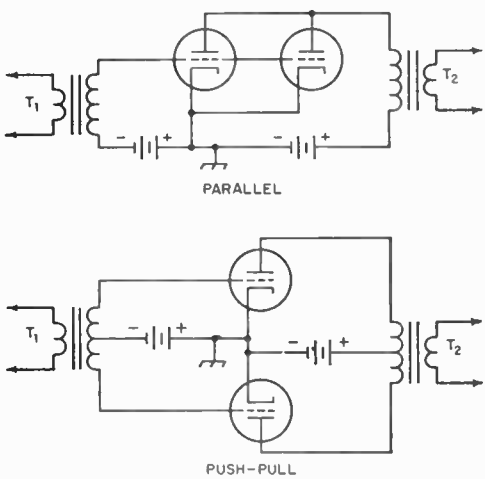

Fig. 3-12 — Parallel and push-pull af amplifier circuits.

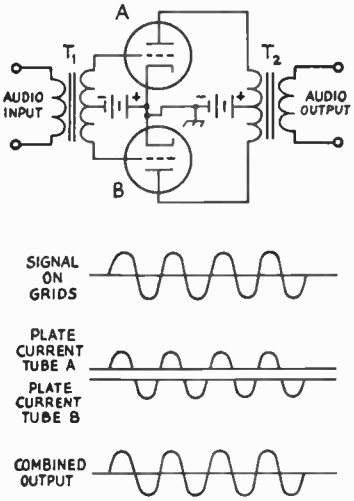

Fig. 3-13 — Class B amplifier operation.

An increase in power output also can be secured by connecting two tubes in push-pull. In this case the grids and plates of the two tubes are connected to opposite ends of a balanced circuit as shown in Fig. 3-12. At any instant the ends of the secondary winding of the input transformer, T_1, will be at opposite polarity with respect to the cathode connection, so the grid of one tube is swung positive at the same instant that the grid of the other is swung negative. Hence, in any push-pull-connected amplifier the voltages and currents of one tube are out of phase with those of the other tube.

In push-pull operation the even-harmonic (second, fourth, etc.) distortion is balanced out in the plate circuit. This means that for the same power output the distortion will be less than with parallel operation.

The exciting voltage measured between the two grids must be twice that required for one tube. If the grids consume power, the driving power for the push-pull amplifier is twice that taken by either tube alone.

Cascade Amplifiers

It is readily possible to take the output of one amplifier and apply it as a signal on the grid of a second amplifer, then take the second amplifier's output and apply it to a third, and so on. Each amplifier is called a stage, and stages used successively are said to be in cascade.

Class B Amplifiers

Fig. 3-13 shows two tubes connected in a push-pull circuit. If the grid bias is set at the point where (when no signal is applied) the plate current is just cut off, then a signal can cause plate current to flow in either tube only when the signal voltage applied to that particular tube is positive with respect to the cathode. Since in the balanced grid circuit the signal voltages on the grids of the two tubes always have opposite polarities, plate current flows only in one tube at a time.

The graphs show the operation of such an amplifier. The plate current of tube *B* is drawn inverted to show that it flows in the opposite direction, through the primary of the output transformer, to the plate current of tube *A*. Thus each half of the output-transformer primary works alternately to induce a half-cycle of voltage in the secondary. In the secondary of T2, the original waveform is restored. This type of operation is called Class B amplification.

The Class B amplifier has considerably higher plate efficiency than the Class A amplifier. Furthermore, the dc plate current of a Class B amplifier is proportional to the signal voltage on the grids, so the power input is small with small signals. The dc plate power input to a Class A amplifier is the same whether the signal is large, small, or absent altogether; therefore the maximum dc plate input that can be applied to a Class A amplifier is equal to the rated plate dissipation of the tube or tubes. Two tubes in a Class B amplifier can deliver approximately twelve times as much audio power as the same two tubes in a Class A amplifier.

A Class B amplifier usually is operated in such a way as to secure the maximum possible power output. This requires rather large values of plate current, and to obtain them the signal voltage must completely overcome the grid bias during at least part of the cycle, so grid current flows and the grid circuit consumes power. While the power requirements are fairly low (as compared with the power output), the fact that the grids are positive during only part of the cycle means that the load on the preceding amplifier or driver stage varies in magnitude during the cycle; the effective load resistance is high when the grids are not drawing current and relatively low when they do take current. This must be allowed for when designing the driver.

Certain types of tubes have been designed specifically for Class B service and can be operated without fixed or other form of grid bias (zero-bias tubes). The amplification factor is so high that the plate current is small without signal. Because there is no fixed bias, the grids start drawing current immediately whenever a signal is applied, so the grid-current flow is continuous throughout the cycle. This makes the load on the driver much more constant than is the case with tubes of lower μ biased to plate-current cut off.

Class B amplifiers used at radio frequencies are known as linear amplifiers because they are adjusted to operate in such a way that the power output is proportional to the square of the rf exciting voltage. This permits amplification of a modulated rf signal without distortion. Push-pull is not required in this type of operation; a single tube can be used equally well.

Class AB Amplifiers

A Class AB audio amplifier is a push-pull amplifier with higher bias than would be normal for pure Class A operation, but less than the cut-off bias required for Class B. At low signal levels the tubes operate as Class A amplifiers, and

the plate current is the same with or without signal. At higher signal levels, the plate current of one tube is cut off during part of the negative cycle of the signal applied to its grid, and the plate current of the other tube rises with the signal. The total plate current for the amplifier also rises above the no-signal level with a large signal is applied.

In a properly designed Class AB amplifier the distortion is as low as with a Class A stage, but the efficiency and power output are considerably higher than with pure Class A operation. A Class AB amplifier can be operated either with or without driving the grids into the positive region. A Class AB_1 amplifier is one in which the grids are never positive with respect to the cathode; therefore no driving power is required – only voltage. A Class AB_2 amplifier is one that has grid-current flow during part of the cycle if the applied signal is large; it takes a small amount of driving power. The Class AB_2 amplifier will deliver somewhat more power (using the same tubes) but the Class AB_1 amplifier avoids the problem of designing a driver that will deliver power, without distortion, into a load of highly variable resistance.

Operating Angle

Inspection of Fig. 3-13 shows that either of the two vacuum tubes is working for only half the ac cycle and idling during the other half. It is convenient to describe the amount of time during which plate current flows in terms of electrical degrees. In Fig. 3-13 each tube has "180-degree" excitation, a half-cycle being equal to 180 degrees. The number of degrees during which plate current flows is called the operating angle of the amplifier. From the descriptions given above, it should be clear that a Class A amplifier has 360-degree excitation, because plate current flows during the whole cycle. In a Class AB amplifier the operating angle is between 180 and 360 degrees (in each tube) depending on the particular operating conditions chosen. The greater the amount of negative grid bias, the smaller the operating angle becomes.

An operating angle of less than 180 degrees leads to a considerable amount of distortion, because there is no way for the tube to reproduce even a half-cycle of the signal on its grid. Using two tubes in push-pull, as in Fig. 3-13, would merely put together two distorted half-cycles. An operating angle of less than 180 degrees therefore cannot be used if distortionless output is wanted.

Class C Amplifiers

In power amplifiers operating at radio frequencies distortion of the rf wave form is relatively unimportant. For reasons described later in this chapter, an rf amplifier must be operated with tuned circuits, and the selectivity of such circuits "filters out" the rf harmonics resulting from distortion.

A radio-frequency power amplifier therefore can be used with an operating angle of less than 180 degrees. This is called Class C operation. The advantage is that the plate efficiency is increased, because the loss in the plate is proportional, among other things, to the amount of time during which the plate current flows, and this time is reduced by decreasing the operating angle.

Depending on the type of tube, the optimum load resistance for a Class C amplifier ranges from about 1500 to 5000 ohms. It is usually secured by using tuned-circuit arrangements, of the type described in the chapter on circuit fundamentals, to transform the resistance of the actual load to the value required by the tube. The grid is driven well into the positive region, so that grid current flows and power is consumed in the grid circuit. The smaller the operating angle, the greater the driving voltage and the larger the grid driving power required to develop full output in the load resistance. The best compromise between driving power, plate efficiency, and power output usually results when the minimum plate voltage (at the peak of the driving cycle, when the plate current reaches its highest value) is just equal to the peak positive grid voltage. Under these conditions the operating angle is usually between 120 and 150 degrees and the plate efficiency lies in the range of 60 to 80 percent. While higher plate efficiencies are possible, attaining them requires excessive driving power and grid bias, together with higher plate voltage than is "normal" for the particular tube type.

With proper design and adjustment, a Class C amplifier can be made to operate in such a way that the power input and output are proportional to the square of the applied plate voltage. This is an important consideration when the amplifier is to be plate-modulated for radiotelephony, as described in the chapter on amplitude modulation.

FEEDBACK

It is possible to take a part of the amplified energy in the plate circuit of an amplifier and insert it into the grid circuit. When this is done the amplifier is said to have feedback.

If the voltage that is inserted in the grid circuit is 180 degrees out of phase with the signal voltage acting on the grid, the feedback is called negative, or degenerative. On the other hand, if the voltage is fed back in phase with the grid signal, the feedback is called positive, or regenerative.

Negative Feedback

With negative feedback the voltage that is fed back opposes the signal voltage. This decreases the amplitude of the voltage acting between the grid and cathode and thus has the effect of reducing the voltage amplification. That is, a larger exciting voltage is required for obtaining the same output voltage from the plate circuit.

The greater the amount of negative feedback (when properly applied) the more independent the amplification becomes of tube characteristics and circuit conditions. This tends to make the frequency-response characteristic of the amplifier flat – that is, the amplification tends to be the same at all frequencies within the range for which the amplifier is designed. Also, any distortion generated in the plate circuit of the tube tends to

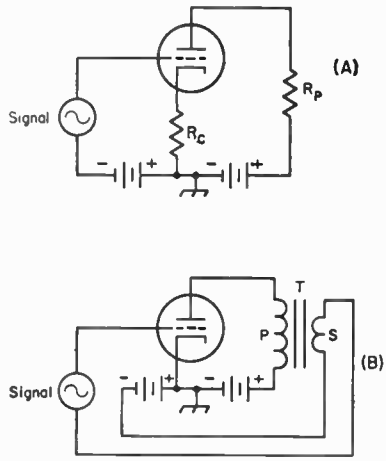

Fig. 3-14 — Simple circuits for producing feedback.

"buck itself out." Amplifiers with negative feedback are therefore comparatively free from harmonic distortion. These advantages are worth while if the amplifier otherwise has enough voltage gain for its intended use.

In the circuit shown at A in Fig. 3-14 resistor R_c is in series with the regular plate resistor, R_p and thus is a part of the load for the tube. Therefore, part of the output voltage will appear across R_c. However, R_c also is connected in series with the grid circuit, and so the output voltage that appears across R_c is in series with the signal voltage. The output voltage across R_c opposes the signal voltage, so the actual ac voltage between the grid and cathode is equal to the *difference* between the two voltages.

The circuit shown At B in Fig. 3-14 can be used to give either negative or positive feedback. The secondary of a transformer is connected back into the grid circuit to insert a desired amount of feedback voltage. Reversing the terminals of either transformer winding (but not both simultaneously) will reverse the phase.

Positive Feedback

Positive feedback increases the amplification because the feedback voltage adds to the original signal voltage and the resulting larger voltage on the grid causes a larger output voltage. The amplification tends to be greatest at one frequency (which depends upon the particular circuit arrangement) and harmonic distortion is increased. If enough energy is fed back, a self-sustaining oscillation – in which energy at essentially one frequency is generated by the tube itself – will be set up. In such case all the signal voltage on the grid can be supplied from the plate circuit; no external signal is needed because any small irregularity in the plate current – and there are always some irregularities – will be amplified and thus give the oscillation an opportunity to build up. Positive feedback finds a major application in such "oscillators," and in addition is used for selective amplification at both audio and radio frequencies, the feedback being kept below the value that causes self-oscillation.

INTERELECTRODE CAPACITANCES

Each pair of elements in a tube forms a small capacitor "plate." There are three such capacitances in a triode – that between the grid and cathode, that between the grid and plate, and that between the plate and cathode. The capacitances are very small – only a few picofarads at most – but they frequently have a very pronounced effect on the operation of an amplifier circuit.

Input Capacitance

It was explained previously that the ac grid voltage and ac plate voltage of an amplifier having a resistive load are 180 degrees out of phase, using the cathode of the tube as a reference point. However, these two voltages are *in* phase going around the circuit from plate to grid as shown in Fig. 3-15. This means that their sum is acting between the grid and plate; that is, across the grid-plate capacitance of the tube.

As a result, a capacitive current flows around the circuit, its amplitude being directly proportional to the sum of the ac grid and plate voltages and to the grid-plate capacitance. The source of the grid signal must furnish this amount of current, in addition to the capacitive current that flows in the grid-cathode capacitance. Hence the signal source "sees" an effective capacitance that is larger than the grid-cathode capacitance. This is known as the Miller Effect.

The greater the voltage amplification the greater the effective input capacitance. The input capacitance of a resistance-coupled amplifier is given by the formula

$$C_{input} = C_{gk} + C_{gp}\,(A + 1)$$

where C_{gk} is the grid-to-cathode capacitance, C_{gp} is the grid-to-plate capacitance, and A is the voltage amplification. The input capacitance may be as much as several hundred picofarads when the voltage amplification is large, even though the interelectrode capacitances are quite small.

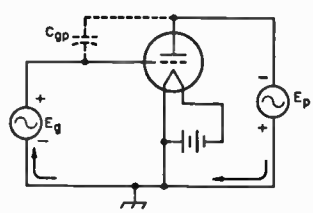

Fig. 3-15 — The ac voltage appearing between the grid and plate of the amplifier is the sum of the signal voltage and the output voltage, as shown by this simplified circuit. Instantaneous polarities are indicated.

Output Capacitance

The principal component of the output capacitance of an amplifier is the actual plate-to-cathode capacitance of the tube. The output capacitance usually need not be considered in audio amplifiers, but becomes of importance at radio frequencies.

Tube Capacitance at RF

At radio frequencies the reactances of even very small interelectrode capacitances drop to very low values. A resistance-coupled amplifier gives very little amplification at rf, for example, because the reactances of the interelectrode "capacitors" are so low that they practically short-circuit the input and output circuits and thus the tube is unable to amplify. This is overcome at radio frequencies by using tuned circuits for the grid and plate, making the tube capacitances part of the tuning capacitances. In this way the circuits can have the high resistive impedances necessary for satisfactory amplification.

The grid-plate capacitance is important at radio frequencies because its reactance, relatively low at rf, offers a path over which energy can be fed back from the plate to the grid. In practically every case the feedback is in the right phase and of sufficient amplitude to cause self-oscillation, so the circuit becomes useless as an amplifier.

Special "neutralizing" circuits can be used to prevent feedback but they are, in general, not too satisfactory when used in radio receivers. They are, however, used in transmitters.

SCREEN-GRID TUBES

The grid-plate capacitance can be reduced to a negligible value by inserting a second grid between the control grid and the plate, as indicated in Fig. 3-16. The second grid, called the screen grid, acts as an electrostatic shield to prevent capacitive coupling between the control grid and plate. It is made in the form of a grid or coarse screen so that electrons can pass through it.

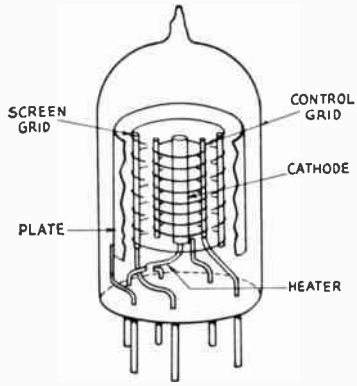

Fig. 3-16 — Representative arrangement of elements in a screen-grid tetrode, with part of plate and screen cut away. This is "single-ended" construction with a button base, typical of miniature receiving tubes. To reduce capacitance between control grid and plate the leads from these elements are brought out at opposite sides; actual tubes probably would have additional shielding between these leads.

Because of the shielding sction of the screen grid, the positively charged plate cannot attract electrons from the cathode as it does in a triode. In order to get electrons to the plate, it is necessary to apply a positive voltage (with respect to the cathode) to the screen. The screen then attracts electrons much as does the plate in a triode tube. In traveling toward the screen the electrons acquire such velocity that most of them shoot between the screen wires and then are attracted to the plate. A certain proportion do strike the screen, however, with the result that some current also flows in the screen-grid circuit.

To be a good shield, the screen grid must be connected to the cathode through a circuit that has low impedance at the frequency being amplified. A bypass capacitor from screen grid to cathode, having a reactance of not more than a few hundred ohms, is generally used.

A tube having a cathode, control grid, screen grid and plate (four elements) is called a tetrode.

Pentodes

When an electron traveling at appreciable velocity through a tube strikes the plate it dislodges other electrons which "splash" from the plate into the interelement space. This is called secondary emission. In a triode the negative grid repels the secondary electrons back into the plate and they cause no disturbance. In the screen-grid tube, however, the positively charged screen attracts the secondary electrons, causing a reverse current to flow between screen and plate.

To overcome the effects of secondary emission, a third grid, called the suppressor grid, may be inserted between the screen and plate. This grid acts as a shield between the screen grid and plate so the secondary electrons cannot be attracted by the screen grid. They are hence attracted back to the plate without appreciably obstructing the regular plate-current flow. A five-element tube of this type is called a pentode.

Although the screen grid in either the tetrode or pentode greatly reduces the influence of the plate upon plate-current flow, the control grid still can control the plate current in essentially the same way that it does in a triode. Consequently, the grid-plate transconductance (or mutual conductance) of a tetrode or pentode will be of the same order of value as in a triode of corresponding structure. On the other hand, since a change in plate voltage has very little effect on the plate-current flow, both the amplification factor and plate resistance of a pentode or tetrode are very high. In small receiving pentodes the amplification factor is of the order of 1000 or higher, while the plate resistance may be from 0.5 to 1 or more megohms. Because of the high plate resistance, the actual voltage amplification possible with a pentode is very much less than the large amplification factor might indicate. A voltage gain in the vicinity of 50 to 200 is typical of a pentode stage.

In practical screen-grid tubes the grid-plate capacitance is only a small fraction of a picofarad. This capacitance is too small to cause an appreciable increase in input capacitance as described in the preceding section, so the input capacitance of a screen-grid tube is equal to the capacitance between the plate and screen.

In addition to their applications as radio-frequency amplifiers, pentodes or tetrodes also are used for audio-frequency power amplification. In tubes designed for this purpose the chief function of the screen is to serve as an accelerator of the electrons, so that large values of plate current can be drawn at relatively low plate voltages. Such tubes have quite high power sensitivity compared with triodes of the same power output, although harmonic distortion is somewhat greater.

Beam Tubes

A beam tetrode is a four-element screen-grid tube constructed in such a way that the electrons are formed into concentrated beams on their way to the plate. Additional design features overcome the effects of secondary emission so that a suppressor grid is not needed. The "beam" construction makes it possible to draw large plate currents at relatively low plate voltages, and increases the power sensitivity.

For power amplification at both audio and radio frequencies beam tetrodes have largely supplanted the non beam types because large power outputs can be secured with very small amounts of grid driving power.

Variable-μ Tubes

The mutual conductance of a vacuum tube decreases when its grid bias is made more negative, assuming that the other electrode voltages are held constant. Since the mutual conductance controls the amount of amplification, it is possible to adjust the gain of the amplifier by adjusting the grid bias. This method of gain control is universally used in radio-frequency amplifiers designed for receivers.

The ordinary type of tube has what is known as a sharp-cutoff characteristic. The mutual conductance decreases at a uniform rate as the negative bias is increased. The amount of signal voltage that such a tube can handle without causing distortion is not sufficient to take care of very strong signals. To overcome this, some tubes are made with a variable-μ characteristic – that is, the amplification factor decreases with increasing grid bias. The variable-μ tube can handle a much larger signal than the sharp-cutoff type before the signal swings either beyond the zero grid-bias point or the plate-current cutoff point.

INPUT AND OUTPUT IMPEDANCES

The input impedance of a vacuum-tube amplifier is the impedance "seen" by the signal source when connected to the input terminals of the amplifier. In the types of amplifiers previously discussed, the input impedance is the impedance measured between the grid and cathode of the tube with operating voltages applied. At audio frequencies the input impedance of a Class A_1 amplifier is for all practical purposes the input impedance of the stage. If the tube is driven into the grid-current region there is in addition a resistance component in the input impedance, the resistance having an average value equal to E^2/P, where E is the rms driving voltage and P is the power in watts consumed in the grid. The resistance usually will vary during the ac cycle because grid current may flow only during part of the cycle; also, the grid-voltage/grid-current characteristic is seldom linear.

The output impedance of amplifiers of this type consists of the plate resistance of the tube shunted by the output capacitance.

At radio frequencies, when tuned circuits are employed, the input and output impedances are usually pure resistances; any reactive components are "tuned out" in the process of adjusting the circuits to resonance at the operating frequency.

OTHER TYPES OF AMPLIFIERS

In the amplifier circuits so far discussed, the signal has been applied between the grid and cathode and the amplified output has been taken from the plate-to-cathode circuit. That is, the cathode has been the meeting point for the input and output circuits. However, it is possible to use any one of the three principal elements as the common point. This leads to two additional kinds of amplifiers, commonly called the grounded-grid amplifier (or grid-separation circuit) and the cathode follower.

These two circuits are shown in simplified form in Fig. 3-17. In both circuits the resistor R represents the load into which the amplifier works; the actual load may be resistance-capacitance-coupled, transformer-coupled, may be a tuned circuit if the amplifier operates at radio frequencies, and so on. Also, in both circuits the batteries that supply grid bias and plate power are assumed to have such negligible impedance that they do not enter into the operation of the circuits.

Grounded-Grid Amplifier

In the grounded-grid amplifier the input signal is applied between the cathode and grid, and the

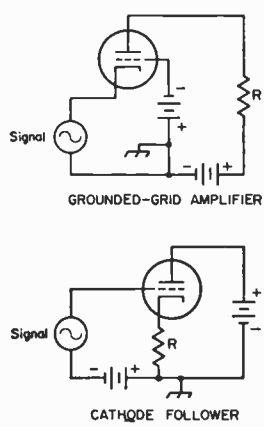

Fig. 3-17 – In the upper circuit, the grid is the junction point between the input and output circuits in the lower drawing, the plate is the junction. In either case the output is developed in the load resistor, R, and may be coupled to a following amplifier by the usual methods.

output is taken between the plate and grid. The grid is thus the common element. The ac component of the plate current has to flow through the signal source to reach the cathode. The source of signal is in series with the load through the plate-to-cathode resistance of the tube, so some of the power in the load is supplied by the signal source. In transmitting applications this fed-through power is of the order of 10 percent of the total power output, using tubes suitable for grounded-grid service.

The input impedance of the grounded-grid amplifier consists of a capacitance in parallel with an equivalent resistance representing the power furnished by the driving source of the grid and to the load. This resistance is of the order of a few hundred ohms. The output impedance, neglecting the interelectrode capacitances, is equal to the plate resistance of the tube. This is the same as in the case of the grounded-cathode amplifier.

The grounded-grid amplifier is widely used at vhf and uhf, where the more conventional amplifier circuit fails to work properly. With a triode tube designed for this type of operation, an rf amplifier can be built that is free from the type of feedback that causes oscillation. This requires that the grid act as a shield between the cathode and plate, reducing the plate-cathode capacitance to a very low value.

Cathode Follower

The cathode follower uses the plate of the tube as the common element. The input signal is applied between the grid and plate (assuming negligible impedance in the batteries) and the output is taken between cathode and plate. This circuit is degenerative; in fact, all of the output voltage is fed back into the input circuit out of phase with the grid signal. The input signal therefore has to be larger than the output voltage; that is, the cathode follower gives a loss in voltage, although it gives the same power gain as other circuits under equivalent operating conditions.

An important feature of the cathode follower is its low output impedance, which is given by the formula (neglecting interelectrode capacitances)

$$Z_{out} = \frac{r_p}{1 + \mu}$$

where r_p is the tube plate resistance and μ is the amplification factor. Low output impedance is a valuable characteristic in an amplifier designed to cover a wide band of frequencies. In addition, the input capacitance is only a fraction of the grid-to-cathode capacitance of the tube, a feature of further benefit in a wide-band amplifier. The cathode follower is useful as a step-down impedance transformer, since the input impedance is high and the output impedance is low.

CATHODE CIRCUITS AND GRID BIAS

Most of the equipment used by amateurs is powered by the ac line. This includes the filaments or heaters of vacuum tubes. Although supplies for the plate (and sometimes the grid) are usually rectified and filtered to give pure dc – that is, direct current that is constant and without a superimposed ac component – the relatively large currents required by filaments and heaters usually make a rectifier-type dc supply impracticable.

Filament Hum

Alternating current is just as good as direct current from the heating standpoint, but some of the ac voltage is likely to get on the grid and cause a low-pitched "ac hum" to be superimposed on the output.

Hum troubles are worst with directly-heated cathodes or filaments, because with such cathodes there has to be a direct connection between the source of heating power and the rest of the circuit. The hum can be minimized by either of the connections shown in Fig. 3-18. In both cases the grid- and plate-return circuits are connected to the electrical midpoint (center tap) of the filament supply. Thus, so far as the grid and plate are concerned, the voltage and current on one side of the filament are balanced by an equal and opposite voltage and current on the other side. The balance is never quite perfect, however, so filament-type tubes are never completely hum-free. For this reason directly-heated filaments are employed for the most part in power tubes, where the hum introduced is extremely small in comparison with the power-output level.

With indirectly heated cathodes the chief problem is the magnetic field set up by the heater. Occasionally, also, there is leakage between the heater and cathode, allowing a small ac voltage to get to the grid. If hum appears, grounding one side of the heater supply usually will help to reduce it, although sometimes better results are obtained if the heater supply is center-tapped and the center-tap grounded, as in Fig. 3-18.

Cathode Bias

In the simplified amplifier circuits discussed in this chapter, grid bias has been supplied by a battery. However, in equipment that operates from the power line, cathode bias is almost universally used for tubes that are operated in Class A (constant dc input).

The cathode-bias method uses a resistor (cathode resistor) connected in series with the cathode,

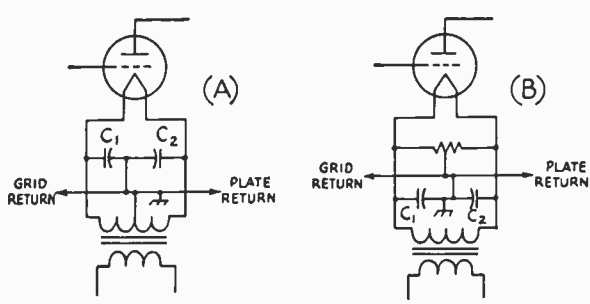

Fig. 3-18 – Filament center-tapping methods for use with directly heated tubes.

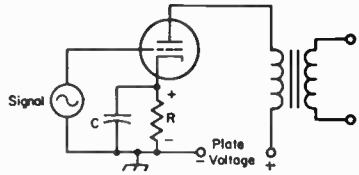

Fig. 3-19 — Cathode biasing. R is the cathode resistor and C is the cathode bypass capacitor.

as shown at R in Fig. 3-19. The direction of plate-current flow is such that the end of the resistor nearest the cathode is positive. The voltage drop across R therefore places a *negative* voltage on the grid. This negative bias is obtained from the steady dc plate current.

If the alternating component of plate current flows through R when the tube is amplifying, the voltage drop caused by the ac will be degenerative (note the similarity between this circuit and that of Fig. 3-14A). To prevent this the resistor is bypassed by a capacitor, C, that has very low reactance compared with the resistance of R. Depending on the type of tube and the particular kind of operation, R may be between about 100 and 3000 ohms. For good bypassing at the low audio frequencies, C should be 10 to 50 microfarads (electrolytic capacitors are used for this purpose). At radio frequencies, capacitances of about 100 pF to 0.1 μF are used; the small values are sufficient at very high frequencies and the largest at low and medium frequencies. In the range 3 to 30 megahertz a capacitance of .01 μF is satisfactory.

The value of cathode resistor for an amplifier having negligible dc resistance in its plate circuit (transformer or impedance coupled) can easily be calculated from the known operating conditions of the tube. The proper grid bias and plate current always are specified by the manufacturer. Knowing these, the required resistance can be found by applying Ohm's Law.

Example: It is found from tube tables that the tube to be used should have a negative grid bias of 8 volts and that at this bias the plate current will be 12 milliamperes (0.012 amp). The required cathode resistance is then

$$R = \frac{E}{I} = \frac{8}{.012} = 667 \text{ ohms}$$

The nearest standard value, 680 ohms, would be close enough. The power used in the resistor is

$$P = EI = 8 \times .012 = 0.096 \text{ watt}$$

A 1/4-watt or 1/2-watt resistor would have ample rating.

The current that flows through R is the total cathode current. In an ordinary triode amplifier this is the same as the plate current, but in a screen-grid tube the cathode current is the sum of the plate and screen currents. Hence these two currents must be added when calculating the value of cathode resistor required for a screen-grid tube.

Example: A receiving pentode requires 3 volts negative bias. At this bias and the recommended plate and screen voltages, its plate current is 9 mA and its screen current is 2 mA. The cathode current is therefore 11 mA (0.011 amp). The required resistance is

$$R = \frac{E}{I} = \frac{3}{.011} = 272 \text{ ohms}$$

A 270-ohm resistor would be satisfactory. The power in the resistor is

$$P = EI = 3 \times 0.011 = .033 \text{ watt}$$

The cathode-resistor method of biasing is self-regulating, because if the tube characteristics vary slightly from the published values (as they do in practice) the bias will increase if the plate current is slightly high, or decrease if it is slightly low. This tends to hold the plate current at the proper value.

Calculation of the cathode resistor for a resistance-coupled amplifier is ordinarily not practicable by the method described above, because the plate current in such an amplifier is usually much smaller than the rated value given in the tube tables. However, representative data for the tubes commonly used as resistance-coupled amplifiers are given in the chapter on audio amplifiers, including cathode-resistor values.

"Contact Potential" Bias

In the absence of any negative bias voltage on the grid of a tube, some of the electrons in the space charge will have enough velocity to reach the grid. This causes a small current (of the order of microamperes) to flow in the external circuit between the grid and cathode. If the current is made to flow through a high resistance — a megohm or so — the resulting voltage drop in the resistor will give the grid a negative bias of the order of one volt. The bias so obtained is called contact-potential bias.

Contact-potential bias can be used to advantage in circuits operating at low signal levels (less than one volt peak) since it eliminates the cathode-bias resistor and bypass capacitor. It is principally used in low-level resistance-coupled audio amplifiers. The bias resistor is connected directly between grid and cathode, and must be isolated from the signal source by a blocking capacitor.

Screen Supply

In practical circuits using tetrodes and pentodes the voltage for the screen frequently is taken from the plate supply through a resistor. A typical circuit for an rf amplifier is shown in Fig. 3-20. Resistor R is the screen dropping resistor, and C is the screen bypass capacitor. In flowing through R, the screen current causes a voltage drop in R that reduces the plate-supply voltage to the proper value for the screen. When the plate-supply voltage and the screen current are known, the value of R can be caluclated from Ohm's Law.

Example: An rf receiving pentode has a rated screen current of 2 milliamperes (0.002 amp) at normal operating conditions. The rated screen voltage is 100 volts, and the plate supply gives 250 volts. To put 100 volts on the screen, the drop across R must be equal to the difference between the plate-supply voltage and the screen voltage; that is, 250 − 100 = 150 volts. Then

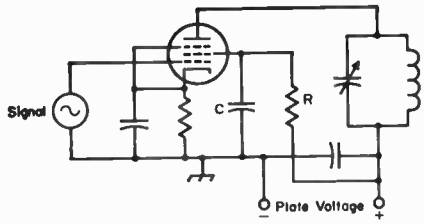

Fig. 3-20 — Screen-voltage supply for a pentode tube through a dropping resistor, R. The screen bypass capacitor, C, must have low enough reactance to bring the screen to ground potential for the frequency or frequencies being amplified.

$$R = \frac{E}{I} = \frac{150}{.002} = 75{,}000 \text{ ohms}$$

The power to be dissipated in the resistor is

$$P = EI = 150 \times .002 = 0.3 \text{ watt}$$

A 1/2- or 1-watt resistor would be satisfactory.

The reactance of the screen bypass capacitor, C, should be low compared with the screen-to-cathode impedance. For radio-frequency applications a capacitance in the vicinity of .01 μF is amply large.

In some vacuum-tube circuits the screen voltage is obtained from a voltage divider connected across the plate supply. The design of voltage dividers is discussed at length elsewhere in this book.

OSCILLATORS

It was mentioned earlier that if there is enough positive feedback in an amplifier circuit, self-sustaining oscillations will be set up. When an amplifier is arranged so that this condition exists it is called an **oscillator.**

Oscillations normally take place at only one frequency, and a desired frequency of oscillation can be obtained by using a resonant circuit tuned to that frequency. For example, in Fig. 3-21A the circuit LC is tuned to the desired frequency of oscillation. The cathode of the tube is connected to a tap on coil L and the grid and plate are connected to opposite ends of the tuned circuit. When an rf current flows in the tuned circuit there is a voltage drop across L that increases progressively along the turns. Thus the point at which the tap is connected will be at an intermediate potential with respect to the two ends of the coil. The amplified current in the plate circuit, which flows through the bottom section of L, is in phase with the current already flowing in the circuit and thus in the proper relationship for positive feedback.

The amount of feedback depends on the position of the tap. If the tap is too near the grid end the voltage drop between grid and cathode is too small to give enough feedback to sustain oscillation, and if it is too near, the plate end of the impedance between the cathode and plate is too small to permit good amplification. Maximum feedback usually is obtained when the tap is somewhere near the center of the coil.

The circuit of Fig. 3-21A is parallel-fed, C_b being the blocking capacitor. The value of C_b is not critical so long as its reactance is low (not more than a few hundred ohms) at the operating frequency.

Capacitor C_g is the grid capacitor. It and R_g (the grid leak) are used for the purpose of obtaining grid bias for the tube. In most oscillator circuits the tube generates its own bias. During the part of the cycle when the grid is positive with respect to the cathode, it attracts electrons. These electrons cannot flow through L back to the cathode because C_g "blocks" direct current. They therefore have to flow or "leak" through R_g to cathode, and in doing so cause a voltage drop in R_g that places a negative bias on the grid. The amount of bias so developed is equal to the grid current multiplied by the resistance of R_g (Ohm's Law). The value of grid-leak resistance required depends upon the kind of tube used and the purpose for which the oscillator is intended. Values range all the way from a few thousand to several hundred thousand ohms. The capacitance of C_g should be large enough to have low reactance (a few hundred ohms) at the operating frequency.

The circuit shown at B in Fig. 3-21 uses the voltage drops across two capacitors in series in the tuned circuit to supply the feedback. Other than this, the operation is the same as just described. The feedback can be varied by varying the ratio of the reactance of C1 and C2 (that is, by varying the ratio of their capacitances).

Another type of oscillator, called the tuned-plate tuned-grid circuit, is shown in Fig. 3-22. Resonant circuits tuned approximately to the same frequency are connected between grid and cathode and between plate and cathode. The two coils, L1

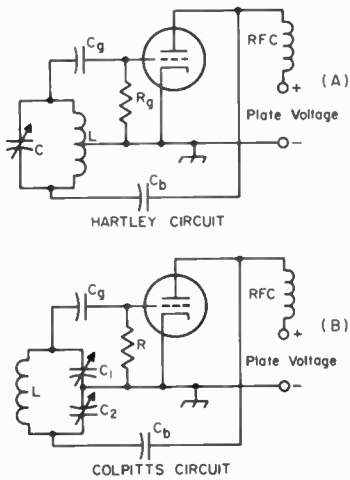

Fig. 3-21 — Basic oscillator circuits. Feedback voltage is obtained by tapping the grid and cathode across a portion of the tuned circuit. In the Hartley circuit the tap is on the coil, but in the Colpitts circuit the voltage is obtained from the drop across a capacitor.

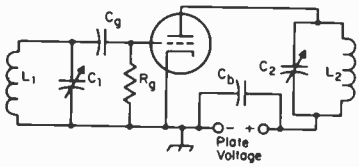

Fig. 3-22 — The tuned-plate tuned-grid oscillator.

and L2, are not magnetically coupled. The feedback is through the grid-plate capacitance of the tube, and will be in the right phase to be positive when the plate circuit, C2-L2, is tuned to a slightly higher frequency than the grid circuit, L1-C1. The amount of feedback can be adjusted by varying the tuning of either circuit. The frequency of oscillation is determined by the tuned circuit that has the higher Q. The grid leak and grid capacitor have the same functions as in the other circuits. In this case it is convenient to use series feed for the plate circuit, so C_b is a bypass capacitor to guide the rf current around the plate supply.

There are many oscillator circuits (examples of others will be found in later chapters) but the basic feature of all of them is that there is positive feedback in the proper amplitude and phase to sustain oscillation.

Oscillator Operating Characteristics

When an oscillator is delivering power to a load, the adjustment for proper feedback will depend on how heavily the oscillator is loaded – that is, how much power is being taken from the circuit. If the feedback is not large enough – grid excitation too small – a small increase in load may tend to throw the circuit out of oscillation. On the other hand, too much feedback will make the grid current excessively higher, with the result that the power loss in the grid circuit becomes larger than necessary. Since the oscillator itself supplies this grid power, excessive feedback lowers the over-all efficiency because whatever power is used in the grid circuit is not available as useful output.

One of the most important considerations in oscillator design is frequency stability. The principal factors that cause a change in frequency are (1) temperature, (2) plate voltage, (3) loading, (4) mechanical variations of circuit elements. Temperature changes will cause vacuum-tube elements to expand or contract slightly, thus causing variations in the interelectrode capacitances. Since these are unavoidably part of the tuned circuit, the frequency will change correspondingly. Temperature changes in the coil or the tuning capacitor will alter the inductance or capacitance slightly, again causing a shift in the resonant frequency. These effects are relatively slow in operation, and the frequency change caused by them is called drift.

A change in plate voltage usually will cause the frequency to change a small amount, an effect called dynamic instability. Dynamic instability can be reduced by using a tuned circuit of high effective Q. The energy taken from the circuit to supply grid losses, as well as energy supplied to a load, represent an increase in the effective resistance of the tuned circuit and thus lower its Q. For highest stability, therefore, the coupling between the tuned circuit and the tube and load must be kept as loose as possible. Preferably, the oscillator should not be required to deliver power to an external circuit, and a high value of grid leak resistance should be used since this helps to raise the tube grid and plate resistances as seen by the tuned circuit. Loose coupling can be effected in a variety of ways – one, for example, is by "tapping down" on the tank for the connections to the grid and plate. This is done in the "series-tuned" Colpitts circuit widely used in variable-frequency oscillators for amateur transmitters and described in a later chapter. Alternatively, the L/C ratio may be made as small as possible while sustaining stable oscillations (high C) with the grid and plate connected to the ends of the circuit as shown in Figs. 3-21 and 3-22. Using relatively high plate voltage and low plate current also is desirable.

In general, dynamic stability will be at maximum when the feedback is adjusted to the least value that permits reliable oscillation. The use of a tube having a high value of transconductance is desirable, since the higher the transconductance the looser the permissible coupling to the tuned circuit and the smaller the feedback required.

Load variations act in much the same way as plate-voltage variations. A temperature change in the load may also result in drift.

Mechanical variations, usually caused by vibrations, cause changes in inductance and/or capacitance that in turn cause the frequency to "wobble" in step with the vibration.

Methods of minimizing frequency variations in oscillators are taken up in detail in later chapters.

Ground Point

In the oscillator circuits shown in Figs. 3-21 and 3-22 the cathode is connected to ground. It is not actually essential that the radio-frequency circuit should be grounded at the cathode; in fact, there are many times when an *rf* ground on some other point in the circuit is desirable. The rf ground can be placed at any point so long as proper provisions are made for feeding the supply voltages to the tube elements.

Fig. 3-23 shows the Hartley circuit with the plate end of the circuit grounded. The cathode and control grid are "above ground," so far as the rf is concerned. An advantage of such a circuit is that the frame of the tuning capacitor can be grounded. The Colpitts circuit can also be used with the plate

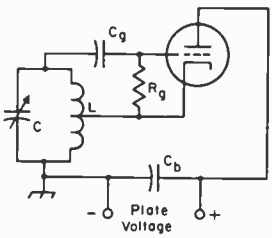

Fig. 3-23 — Showing how the plate may be grounded for rf in a typical oscillator circuit (Hartley).

grounded and the cathode above ground; it is only necessary to feed the dc to the cathode through an rf choke.

A tetrode or pentode tube can be used in any of the popular oscillator circuits. A common variation is to use the screen grid of the tube as the anode for the Hartley or Colpitts oscillator circuit. It is usually used in the grounded anode circuit, and the plate circuit of the tube is tuned to the second harmonic of the oscillator frequency.

CLIPPING CIRCUITS

Vacuum tubes are readily adaptable to other types of operation than ordinary (without substantial distortion) amplification and the generation of single-frequency oscillations. Of particular interest is the clipper or limiter circuit, because of its several applications in receiving and other equipment.

Diode Clipper Circuits

Basic diode clipper circuits are shown in Fig. 3-24. In the series type a positive dc bias voltage is applied to the plate of the diode so it is normally conducting. When a signal is applied the current through the diode will change proportionately during the time the signal voltage is positive at the diode plate and for that part of the negative half of the signal during which the instantaneous voltage does not exceed the bias. When the negative signal voltage exceeds the positive bias the resultant voltage at the diode plate is negative and there is no conduction. Thus part of the negative half cycle is clipped as shown in the drawing at the right. The level at which clipping occurs depends on the bias voltage, and the proportion of signal clipping depends on the signal strength in relation to the bias voltage. If the peak signal voltage is below the bias level there is no clipping and the output wave shape is the same as the input wave shape, as shown in the lower sketch. The output voltage results from the current flow through the load resistor *R*.

In the shunt-type diode clipper negative bias is applied to the plate so the diode is normally nonconducting. In this case the signal voltage is fed through the series resistor *R* to the output circuit (which must have high impedance compared with the resistance of *R*). When the negative half of the signal voltage exceeds the bias voltage the diode of one tube increases when the plate current of the other decreases.) Thus the circuit clips both positive and negative peaks. The clipping is symmetrical, providing the dc voltage drop in R2 is small enough so that the operating conditions of the two

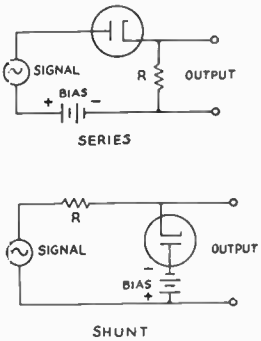

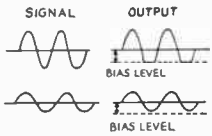

Fig. 3-24 — Series and shunt diode clippers. Typical operation is shown at the right.

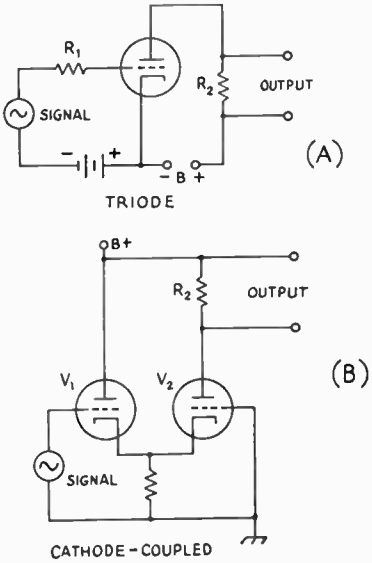

Fig. 3-25 — Triode clippers. A — Single triode, using shunt-type diode clipping in the grid circuit for the positive peak and plate-current cut-off clipping for the negative peak. B — Cathode-coupled clipper, using plate-current cutoff clipping for both positive and negative peaks.

conducts, and because of the voltage drop in *R* when current flows the output voltage is reduced. By proper choice of *R* in relationship to the load on the output circuit the clipping can be made equivalent to that given by the series circuit. There is no clipping when the peak signal voltage is below the bias level.

Two diode circuits can be combined so that both negative and positive peaks are clipped.

Triode Clippers

The circuit shown at A in Fig. 3-25 is capable of clipping both negative and positive signal peaks. On positive peaks its operation is similar to the shunt diode clipper, the clipping taking place when the positive peak of the signal voltage is large enough to drive the grid positive. The positive-clipped signal is amplified by the tube as a resistance-coupled amplifier. Negative peak clipping occurs when the negative peak of the signal voltage exceeds the fixed grid bias and thus cuts off the plate current in the output circuit.

In the cathode-coupled clipper shown at B in Fig. 3-25, V1 is a cathode follower with its output circuit directly connected to the cathode of V2, which is a grounded-grid amplifier. The tubes are

biased by the voltage drop across R1, which carries the dc plate currents of both tubes. When the negative peak of the signal voltage exceeds the dc voltage across R1 clipping occurs in V1, and when the positive peak exceeds the same value of voltage V2's plate current is cut off. (The bias developed in R1 tends to be constant because the plate current tubes are substantially the same. For signal voltages below the clipping level the circuit operates as a normal amplifier with low distortion.

UHF AND MICROWAVE TUBES

The Klystron

In the klystron tube the electrons emitted by the cathode pass through an electric field established by two grids in a cavity resonator called the buncher. The hf electric field between the grids is parallel to the electron stream. This field accelerates the electrons at one moment and retards them at another with the variations of the rf voltage applied. The resulting velocity-modulated beam travels through a field-free "drift space," where the slower-moving electrons are gradually overtaken by the faster ones. The electrons emerging from the pair of grids therefore are separated into groups or "bunched" along the direction of motion. The velocity-modulated electron stream then goes to a catcher cavity where it again passes through two parallel grids, and the rf current created by the bunching of the electron beam reduces an rf voltage between the grids. The catcher cavity is made resonant at the frequency of the velocity-modulated electron beam, so that an oscillating field is set up within it by the passage of the electron bunches through the grid aperture.

If a feedback loop is provided between the two cavities, as shown in Fig. 3-26, oscillations will occur. The resonant frequency depends on the electrode voltages and on the shape of the cavities, and may be adjusted by varying the supply voltage and alterning the dimensions of the cavities.

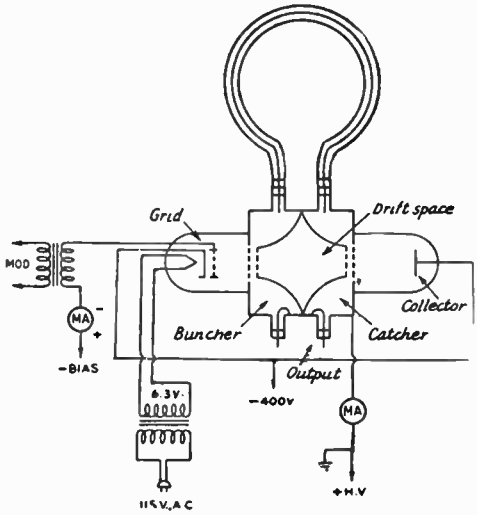

Fig. 3-26 — Circuit diagram of the klystron oscillator, showing the feedback loop coupling the frequency-controlling cavities.

Although the bunched beam current is rich in harmonics the output wave form is remarkably pure because the high Q of the catcher cavity suppresses the unwanted harmonics.

Semiconductor Devices

Materials whose conductivity falls approximately midway between that of good conductors (e.g., copper) and good insulators (e.g., quartz) are called semiconductors. Some of these materials (primarily germanium and silicon) can, by careful processing, be used in solid-state electronic devices that perform many or all of the functions of thermionic tubes. In many applications their small size, long life and low power requirements make them superior to tubes.

The conductivity of a material is proportional to the number of free electrons in the material. Pure germanium and pure silicon crystals have relatively few free electrons. If, however, carefully controlled amounts of "impurities" (materials having a different atomic structure, such as arsenic or antimony) are added the number of free electrons, and consequently the conductivity, is increased. When certain other impurities are introduced (such as aluminum, gallium or indium), an electron deficiency, or hole, is produced. As in the case of free electrons, the presence of holes encourages the flow of electrons in the semiconductor material, and the conductivity is increased. Semiconductor material that conducts by virtue of the free electrons is called n-type material; material that conducts by virtue of an electron deficiency is called p-type.

Electron and Hole Conduction

If a piece of p-type material is joined to a piece of n-type material as at A in Fig. 4-1 and a voltage is applied to the pair as at B, current will flow across the boundary or junction between the two (and also in the external circuit) when the battery has the polarity indicated. Electrons, indicated by the minus symbol, are attracted across the junction from the n material through the p material to the positive terminal of the battery, and holes, indicated by the plus symbol, are attracted in the opposite direction across the junction by the negative potential of the battery. Thus current flows through the circuit by means of electrons moving one way and holes the other.

If the battery polarity is reversed, as at C, the excess electrons in the n material are attracted away from the junction and the holes in the p material are attracted by the negative potential of the battery away from the junction. This leaves the junction region without any current carriers, consequently there is no conduction.

In other words, a junction of p- and n-type materials constitutes a rectifier. It differs from the tube diode rectifier in that there is a measurable, although comparatively very small, reverse current. The reverse current results from the presence of some carriers of the type opposite to those which principally characterize the material.

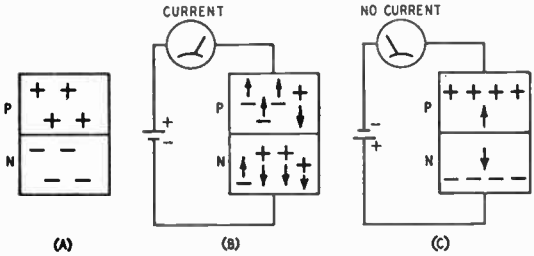

Fig. 4-1 — A p-n junction (A) and its behavior when conducting (B) and nonconducting (C).

With the two plates separated by practically zero spacing, the junction forms a capacitor of relatively high capacitance. This places a limit on the upper frequency at which semiconductor devices of this construction will operate, as compared with vacuum tubes. Also, the number of excess electrons and holes in the material depends upon temperature, and since the conductivity in turn depends on the number of excess holes and electrons, the device is more temperature sensitive than is a vacuum tube.

Capacitance may be reduced by making the contact area very small. This is done by means of a point contact, a tiny p-type region being formed under the contact point during manufacture when n-type material is used for the main body of the device.

SEMICONDUCTOR DIODES

Point-contact and junction-type diodes are used for many of the same purposes for which tube

Typical silicon and germanium diodes of the present era. The larger units are designed to handle high current.

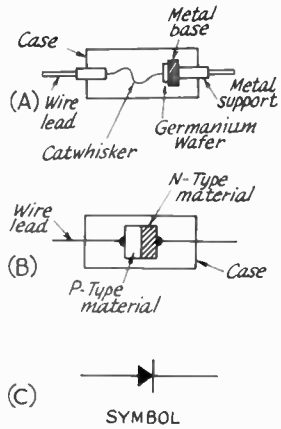

Fig. 4-2 — At A, a germanium point-contact diode. At B, construction of a silicon junction-type diode. The symbol at C is used for both diode types and indicates the direction of minimum resistance measured by conventional methods. At C, the arrow corresponds to the plate (anode) of a vacuum-tube diode. The bar represents the tube's cathode element.

diodes are used. The construction of such diodes is shown in Fig. 4-2. Germanium and silicon are the most widely used materials; silicon finds much application as a microwave mixer diode. As compared with the tube diode for rf applications, the semiconductor point-contact diode has the advantages of very low interelectrode capacitance (on the order of 1 pF or less) and not requiring any heater or filament power.

The germanium diode is characterized by relatively large current flow with small applied voltages in the "forward" direction, and small, although finite, current flow in the reverse or "back" direction for much larger applied voltages. A typical characteristic curve is shown in Fig. 4-3. The dynamic resistance in either the forward or back direction is determined by the change in current that occurs, at any given point on the curve, when the applied voltage is changed by a small amount. The forward resistance shows some variation in the region of very small applied voltages, but the curve is for the most part quite straight, indicating fairly constant dynamic resistance. For small applied voltages, the forward resistance is of the order of 200 ohms or less in most such diodes. The back resistance shows considerable variation, depending on the particular voltage chosen for the measurement. It may run from a few thousand ohms to well over a megohm. In applications such as meter rectifiers for rf indicating instruments (rf voltmeters, wavemeter indicators, and so on) where the load resistance may be small and the applied voltage of the order of several volts, the resistances vary with the value of the applied voltage and are considerably lower.

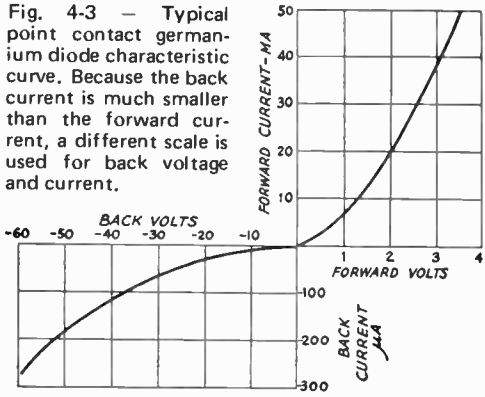

Fig. 4-3 — Typical point contact germanium diode characteristic curve. Because the back current is much smaller than the forward current, a different scale is used for back voltage and current.

Junction Diodes

Junction-type diodes made of silicon are employed widely as rectifiers. Depending upon the design of the diode, they are capable of rectifying currents up to 40 or 50 amperes, and up to reverse peak voltages of 2500. They can be connected in series or in parallel, with suitable circuitry, to provide higher capabilities than those given above. A big advantage over thermionic rectifiers is their large surge-to-average-current ratio, which makes them suitable for use with capacitor-only filter circuits. This in turn leads to improved no-load-to-full-load voltage characteristics. Some consideration must be given to the operating temperature of silicon diodes, although many carry ratings to 150 degrees C or so. A silicon junction diode requires a forward voltage of from 0.4 to 0.7 volts to overcome the junction potential barrier.

Ratings

Semiconductor diodes are rated primarily in terms of maximum safe inverse voltage (PIV or PRV) and maximum average rectified current. Inverse voltage is a voltage applied in the direction opposite to that which would be read by a dc meter connected in the current path.

It is also customary with some types to specify standards of performance with respect to forward and back current. A minimum value of forward current is usually specified for one volt applied. The voltage at which the maximum tolerable back current is specified varies with the type of diode.

Zener Diodes

The Zener diode is a special type of silicon junction diode that has a characteristic similar to that shown in Fig. 4-4. The sharp break from non-conductance to conductance is called the Zener knee; at applied voltages greater than this breakdown point, the voltage drop across the diode is essentially constant over a wide range of currents. The substantially constant voltage drop over a wide range of currents allows this semiconductor device to be used as a constant voltage reference or control element, in a manner somewhat similar to the gaseous voltage-regulator tube. Voltages for Zener-diode action range from a

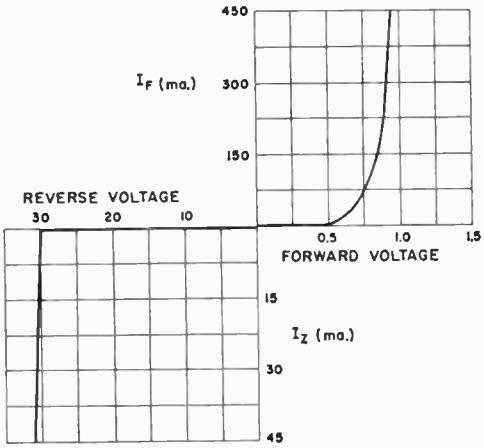

Fig. 4-4 — Typical characteristic of a Zener diode. In this example, the voltage drop is substantially constant at 30 volts in the (normally) reverse direction. Compare with Fig. 4-3. A diode with this characteristic would be called a "30-volt Zener diode."

few volts to several hundred and power ratings run from a fraction of a watt to 50 watts.

Zener diodes can be connected in series to advantage; the temperature coefficient is improved over that of a single diode of equivalent rating and the power-handling capability is increased.

Examples of Zener diode applications are given in Fig. 4-5. The illustrations represent some of the more common uses to which Zeners are put. Many other applications are possible, though not shown here.

Voltage-Variable Capacitor Diodes

Voltage-variable capacitors, Varicaps or varactors, are p-n junction diodes that behave as capacitors of reasonable Q when biased in the reverse direction. They are useful in many applications because the actual capacitance value is dependent upon the dc bias voltage that is applied. In a typical capacitor the capacitance can be varied over a 10-to-1 range with a bias change from 0 to −100 volts. The current demand on the bias supply is on the order of a few microamperes.

Typical applications include remote control of tuned circuits, automatic frequency control of receiver local oscillators, and simple frequency modulators for communications and for sweep-

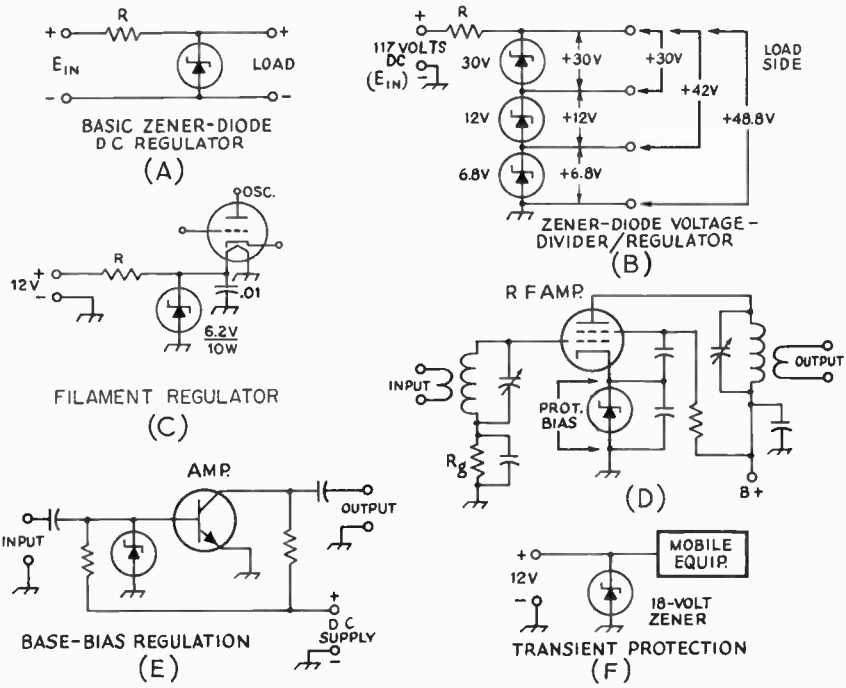

Fig. 4-5 — Zener diodes have many practical uses. Shown at A, is a simple dc voltage regulator which operates in the same manner as a gaseous regulator tube. Several Zener diodes can be connected in series (B) to provide various regulated voltages. At C, the filament line of a tube is supplied with regulated dc to enhance oscillator stability and reduce hum. In the circuit at D a Zener diode sets the bias level of an rf power amplifier. Bias regulation is afforded the bipolar transistor at E by connecting the Zener diode between base and ground. At F, the 18-volt Zener will clip peaks at and above 18 volts to protect 12-volt mobile equipment. (High peaks are frequently caused by transients in the automotive ignition system.)

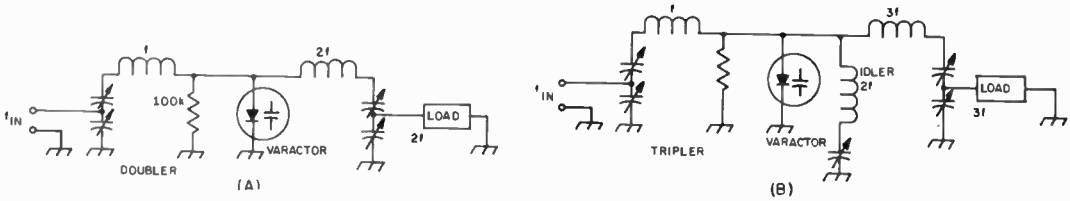

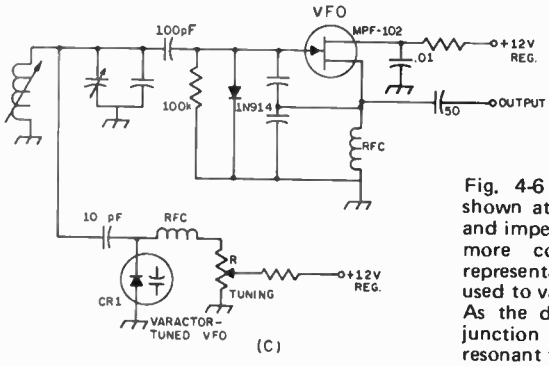

Fig. 4-6 — Varactor frequency multipliers are shown at A and B. In practice the tuned circuits and impedance-matching techniques are somewhat more complex than those shown in these representative circuits. At C, a varactor diode is used to vary the frequency of a typical JFET VFO. As the dc voltage is changed by control R, the junction capacitance of CR1 changes to shift the resonant frequency of the tuned circuit.

tuning applications. Diodes used in these applications are frequently referred to as "Varicap" or "Epicap" diodes.

An important transmitter application of the varactor is as a high-efficiency frequency multiplier. The basic circuits for varactor doublers and triplers are shown in Fig. 4-6, at A and B. In these circuits the fundamental frequency flows around the input loop. Harmonics generated by the varactor are passed to the load through a filter tuned to the desired harmonic. In the case of the tripler circuit at B, an idler circuit, tuned to the second harmonic, is required. Tripling efficiencies of 75 percent are not too difficult to come by, at power levels of 10 to 25 watts.

Fig. 4-6C illustrates how a voltage-variable capacitor diode can be used to tune a VFO. These diodes can be used to tune other rf circuits also, and are particularly useful for remote tuning such as might be encountered in vehicular installations. These diodes, because of their small size, permit tuned-circuit assemblies to be quite compact. Since the Q of the diode is a vital consideration in such applications, this factor must be taken into account when designing a circuit. Present-day manufacturing processes have produced units whose Qs are in excess of 200 at 50 MHz.

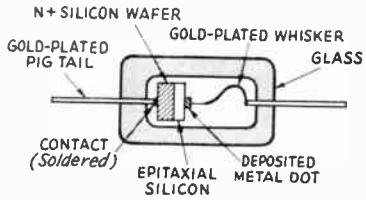

Fig. 4-7 — Cross-sectional view of a hot-carrier diode.

HOT-CARRIER DIODES

The hot-carrier diode is a high-frequency and microwave semiconductor whose characteristics fall somewhere between those of the point-contact diode and the junction diode. The former is comparable to the point-contact diode in high-frequency characteristics, and exceeds it in uniformity and reliability. The hot-carrier diode is useful in high-speed switching circuits and as a mixer, detector, and rectifier well into the microwave spectrum. In essence, the hot-carrier diode is a rectifying metal-semiconductor junction. Typical metals used in combination with silicon of either the n- or p-type are platinum, silver, gold or palladium.

The hot-carrier diode utilizes a true Schottky barrier, whereas the point-contact diode used a metal whisker to make contact with the semiconductor element. In a hot-carrier diode a planar area provides a uniform contact potential and uniform current distribution throughout the junction. This geometry results in lower series resistance, greater power capability, lower noise characteristics, and considerably greater immunity to burnout from transient pulses or spikes. A cross-sectional view of a hot-carrier diode is shown in Fig. 4-7 (courtesy of Hewlett Packard Associates). A comparison in characteristics between a point-contact diode and a hot-carrier diode is given in Fig. 4-8. Detailed information on the characteristics of hot-carrier diodes and their many applications is given in Hewlett Packard *Application Note 907.*

PIN Diodes

Another type of diode is the PIN diode. It might more aptly be described as a variable resistor than as a diode. In its intended application (at vhf and higher) it does not rectify the applied signal, nor does it generate harmonics. Its resistance is controlled by dc or a low-frequency signal, and the high-frequency signal which is being controlled by the diode sees a constant polarity-independent resistance. The dynamic resistance of the PIN diode is often larger than 10,000 ohms, and its junction capacitance is very low.

PIN diodes are used as variable shunt or series resistive elements in microwave transmission lines, and as agc diodes in the signal input lead to vhf and uhf fm receivers. The PIN diode offers many interesting possibilities.

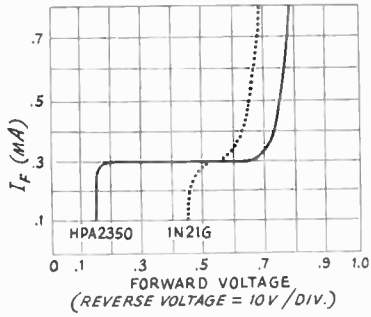

Fig. 4-8 — Curves showing the comparison in characteristics between a 1N21G point-contact diode and a Hewlett-Packard HPA2350 hot-carrier diode.

TRANSISTORS

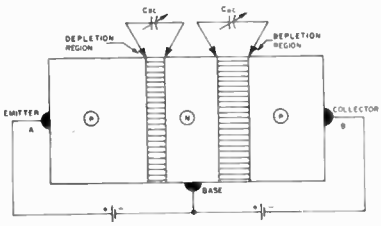

Fig. 4-9 — Illustration of a junction pnp transistor. Capacitances Cbe and Cbc are discussed in the text, and vary with changes in operating and signal voltage.

Fig. 4-9 shows a "sandwich" made from two layers of p-type semiconductor material with a thin layer of n-type between. There are in effect two pn junction diodes back to back. If a positive bias is applied to the p-type material at the left, current will flow though the left-hand junction, the holes moving to the right and the electrons from the n-type material moving to the left. Some of the holes moving into the n-type material will combine with the electrons there and be neutralized, but some of them also will travel to the region of the right-hand junction.

If the pn combination at the right is biased positively, as shown, there would normally be no current flow in this circuit. However, there are now additional holes available at the junction to travel to point *B* and electrons can travel toward point *A*, so a current can flow even though this section of the sandwich is biased to prevent conduction. Most of the current is between *A* and *B* and does not flow out through the common connection to the n-type material in the sandwich.

A semiconductor combination of this type is called a transistor, and the three sections are known as the emitter, base and collector, respectively. The amplitude of the collector current depends principally upon the amplitude of the emitter current; that is, the collector current is controlled by the emitter current.

Between each p-n junction exists an area known as the depletion, or transition region. It is similar in characteristics to a dielectric layer, and its width varies in accordance with the operating voltage. The semiconductor materials either side of the depletion region consitute the plates of a capacitor. The capacitance from base to emitter is shown as C_{be} (Fig. 4-9), and the collector-base capacitance is represented as C_{bc}. Changes in signal and operating voltages cause a nonlinear change in these junction capacitances, which must be taken into account when designing some circuits. A base-emitter resistance, *rb'*, also exists. The junction capacitance, in combination with rb' determines the useful upper frequency limit (f_T or f_a) of a transistor by establishing an *RC* time constant.

Power Amplification

Because the collector is biased in the back direction the collector-to-base resistance is high.

This photo shows various modern-day bipolar and field-effect transistors. Various case styles and power classes are represented here.

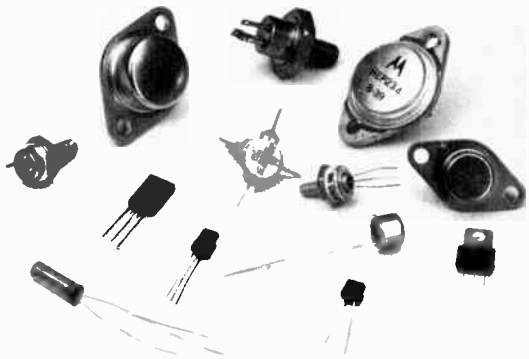

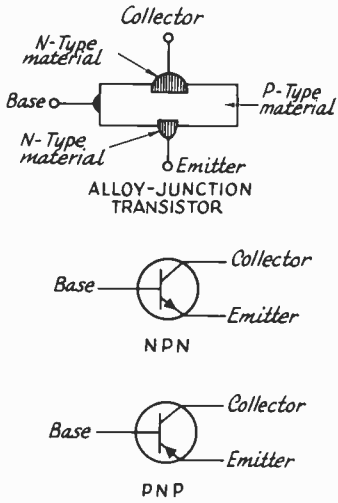

Fig. 4-10 — Schematic and pictorial representations of junction-type transistors. In analogous terms the base can be thought of as a tube's grid, the collector as a plate, and the emitter as a cathode. (See Fig. 4-12.)

On the other hand, the emitter and collector currents are substantially equal, so the power in the collector circuit is larger than the power in the emitter circuit ($P = I^2R$, so the powers are proportional to the respective resistances, if the currents are the same). In practical transistors emitter resistance is of the order of a few hundred ohms while the collector resistance is hundreds or thousands of times higher, so power gains of 20 to 40 dB or even more are possible.

Types

The transistor may be one of the types shown in Fig. 4-10. The assembly of p- and n-types materials may be reversed, so that pnp and npn transistors are both possible.

The first two letters of the npn and pnp designations indicate the respective polarities of the voltages applied to the emitter and collector in normal operation. In a pnp transistor, for example, the emitter is made positive with respect to both the collector and the base, and the collector is made negative with respect to both the emitter and the base.

Manufacturers are constantly working to improve the performance of their transistors — greater reliability, higher power and frequency ratings, and improved uniformity of characteristics for any given type number. Recent developments provided the overlay transistor, whose emitter structure is made up of several emitters which are joined together at a common case terminal. This process lowers the base-emitter resistance, *rb'*, and improves the transistor's input time constant, which is determined by *rb'* and the junction capacitance of the device. The overlay transistor is extremely useful in vhf and uhf applications, and is capable of high-power operation well above 1000 MHz. These transistors are quite useful as frequency doublers and triplers, and are able to provide an actual power gain in the process.

Another multi-emitter transistor has been developed for use from hf through uhf, and should be of particular interest to the radio amateur. It is called a balanced-emitter transistor (BET), or "ballasted" transistor. The transistor chip contains several triode semiconductors whose bases and collectors are connected in parallel. The various emitters, however, have built-in emitter resistors (typically about 1 ohm) which provide a current-limiting safety factor during overload periods, or under conditions of significant mismatch. Since the emitters are brought out to a single case terminal the resistances are effectively in parallel, thus reducing the combined emitter resistances to a fraction of an ohm. (If a significant amount of resistance were allowed to exist it would cause degeneration in the stage and would lower the gain of the circuit.)

Most modern transistors are of the junction variety. Various names have been given to the several types, some of which are junction alloy, mesa, and planar. Though their characteristics may differ slightly, they are basically of the same family and simply represent different physical properties and manufacturing techniques.

Transistor Characteristics

An important characteristic of a transistor is its beta (β), or current-amplification factor, which is sometimes expressed as h_{FE} (static forward-current

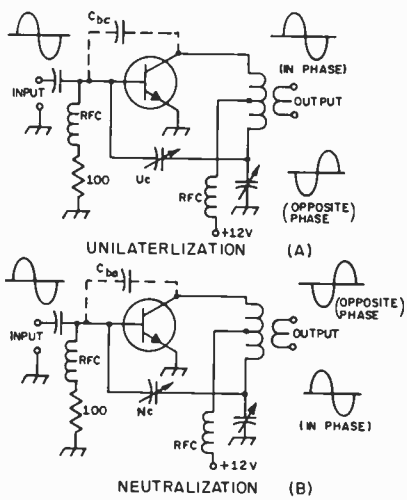

Fig. 4-11 — Transit-time effects (in combination with base-collector capacitance Cbc) can cause the positive-feedback condition shown at A. Normally, the phase of the collector signal of an amplifier is the inverse of the base signal. Positive feedback can be corrected by using unilateralization, feeding an equal amount of opposite-phase signal back to the base through Uc. Neutralization is shown at B, and deals with negative feedback, as can be seen by the phase relationships shown.

transfer ratio) or hfe (small-signal forward-current transfer ratio). Both symbols relate to the grounded-emitter configuration. Beta is the ratio of the base current to the collector current. Thus, if a base current of 1 mA causes the collector current to rise to 100 mA the beta is 100. Typical betas for junction transistors range from as low as 10 to as high as several hundred.

A transistor's alpha (α) is the ratio of the emitter and collector currents. Symbols h_{FB} (static forward-current transfer ratio) and hfb (small-signal forward-current transfer ratio), common-base hookup, are frequently used in connection with gain. The smaller the base current, the closer the collector current comes to being equal to that of the emitter, and the closer alpha comes to being 1. Alpha for a junction transistor is usually between 0.92 and 0.98.

Transistors have frequency characteristics which are of importance to circuit designers. Symbol f_T is the gain bandwidth product (common-emitter) of the transistor. This is the frequency at which the gain becomes unity, or 1. The expression "alpha cutoff" is frequently used to express the useful upper-frequency limit of a transistor, and this relates to the common-base hookup. Alpha cutoff is the point at which the gain is 0.707, its value at 1000 Hz.

Another factor which limits the upper frequency capability of a transistor is its transit time. This is the period of time required for the current to flow from emitter to collector, through the semiconductor base material. The thicker the base material, the greater the transit time. Hence, the thicker the base material the more likelihood there will be of phase shift of the signal passing through it. At frequencies near and above f_T or alpha cutoff partial or complete phase shift can occur. This will give rise to positive feedback because the internal capacitance, C_{bc}, (Fig. 4-11) feeds part of the in-phase collector signal back to the base. The positive feedback can cause instability and oscillation, and in most cases will interlock the input and output tuned circuits of an rf amplifier so that it is almost impossible to tune them properly. Positive feedback can be corrected by

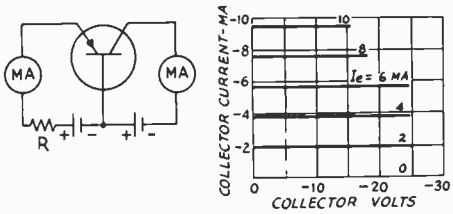

Fig. 4-12 — A typical collector-current vs. collector-voltage characteristic of a junction-type transistor, for various emitter-current values. The circuit shows the setup for taking such measurements. Since the emitter resistance is low, a current-limiting resistor, R, is connected in series with the source of current. The emitter current can be set at a desired value by adjustment of this resistance.

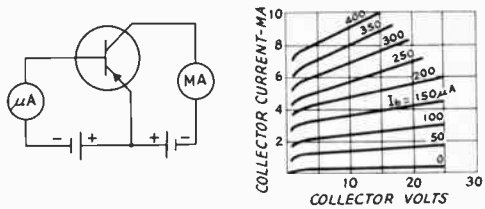

Fig. 4-13 — Collector current vs. collector voltage for various values of base current, for a junction-type transistor. The values are determined by means of the circuit shown.

using a form of neutralization called unilateralization. In this case the feedback conditions are balanced out. These conditions include a resistive as well as a capacitive component, thus changing a network from bilaterial to one which is unilateral. Negative feedback caused by C_{bc}, on the other hand, can be corrected by neutralization. Examples of both techniques are given in Fig. 4-11.

Characteristic Curves

The operating characteristics of transistors can be shown by a series of characteristic curves. One such set of curves is shown in Fig. 4-12. It shows the collector current *vs.* collector voltage for a number of fixed values of emitter current. Practically the collector current depends almost entirely on the emitter current and is independent of the collector voltage. The separation between curves representing equal steps of emitter current is quite uniform, indicating that almost distortionless output can be obtained over the useful operating range of the transistor.

Another type of curve is shown in Fig. 4-13, together with the circuit used for obtaining it. This also shows collector current *vs* collector voltage, but for a number of different values of base current. In this case the emitter element is used as the common point in the circuit. The collector current is not independent of collector voltage with this type of connection, indicating that the output resistance of the device is fairly low. The base current also is quite low, which means that the resistance of the base-emitter circuit is moderately high with this method of connection. This may be contrasted with the high values of emitter current shown in Fig. 4-12.

Ratings

The principal maximum ratings for transistors are collector dissipation, collector voltage, collector current, and emitter current. Variations in these basic ratings, such as maximum collector-to-base voltage, are covered in the symbols chart later in this chapter. The designer should study the maximum ratings of a given transistor before selecting it for use in a circuit.

The dissipation rating can be a troublesome matter for an inexperienced designer. Techniques must be employed to reduce the operating

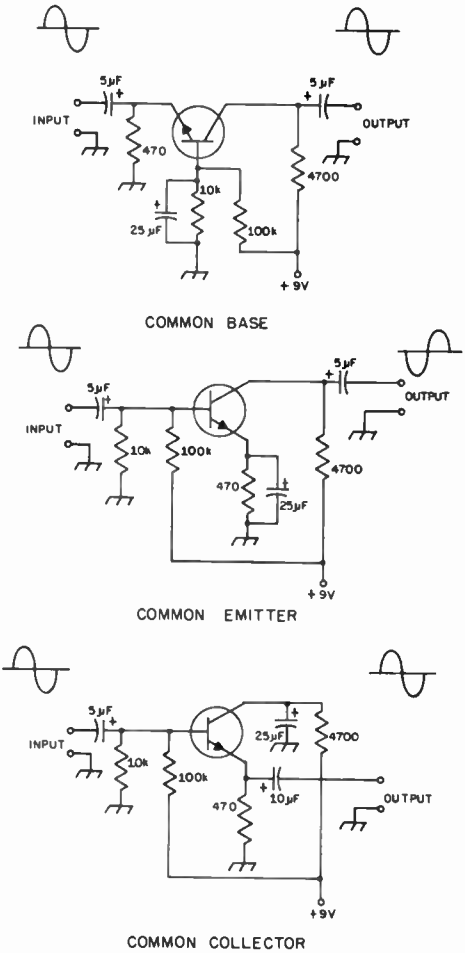

Fig. 4-14 — Basic transistor amplifier circuits. The differences between modes is readily apparent. Typical component values are given for use at audio frequencies. The input and output phase relationships are as shown.

temperature of power transistors, and this usually requires that thermal-conducting materials (heat sinks) be installed on the body of the transistor. The specification sheets list the maximum transistor dissipation in terms of case temperatures up to 25 degrees C. Symbol T_C is used for the case temperature and P_T represents the total dissipation. Silicone grease is often used to assure proper thermal transfer between the transistor and its heat sink. Additional information on the use of heat sinks is given in Chapter 18.

Excessive heat can lead to a condition known as thermal runaway. As the transistor gets hotter its internal resistance becomes lower, resulting in an increase of emitter-to-collector and emitter-to-base current. The increased current raises the dissipation and further lowers the internal resistance. The effects are cumulative, and eventually the transistor will be destroyed. It can be seen from this discussion that the use of heat sinks is important, where applicable.

TRANSISTOR AMPLIFIERS

Amplifier circuits used with transistors fall into one of three types, known as the common-base, common-emitter, and common-collector circuits. These are shown in Fig. 4-14 in elementary form. The three circuits correspond approximately to the grounded-grid, grounded-cathode and cathode-follower circuits, respectively, used with vacuum tubes.

The important transistor parameters in these circuits are the short-circuit current transfer ratio, the cut-off frequency, and the input and output impedances. The short-circuit current transfer ratio is the ratio of a small change in output current to the change in input current that causes it, the output circuit being short-circuited. The cutoff frequency was discussed earlier in this chapter. The input and output impedances are, respectively, the impedance which a signal source working into the transistor would see, and the internal output impedance of the transistor (corresponding to the plate resistance of a vacuum tube, for example).

Common-Base Circuit

The input circuit of a common-base amplifier must be designed for low impedance, since the emitter-to-base resistance is of the order of $25/I_e$ ohms, where I_e is the emitter current in milliamperes. The optimum output load impedance, R_L, may range from a few thousand ohms to 100,000, depending upon the requirements.

In this circuit the phase of the output (collector) current is the same as that of the input (emitter) current. The parts of these currents that flow through the base resistance are likewise in phase, so the circuit tends to be regenerative and will oscillate if the current amplification factor is greater than 1.

Common-Emitter Circuit

The common-emitter circuit shown in Fig. 4-14 corresponds to the ordinary grounded-cathode vacuum-tube amplifier. As indicated by the curves of Fig. 4-13, the base current is small and the input impedance is therefore fairly high – several thousand ohms in the average case. The collector resistance is some tens of thousands of ohms, depending on the signal source impedance. The common-emitter circuit has a lower cutoff frequency than does the common-base circuit, but it gives the highest power gain of the three configurations.

In this circuit the phase of the output (collector) current is opposite to that of the input (base) current so such feedback as occurs through the small emitter resistance is negative and the amplifier is stable.

Common-Collector Circuit

Like the vacuum-tube cathode follower, the common-collector transistor amplifier has high

input impedance and low output impedance. The latter is approximately equal to the impedance of the signal input source multiplied by $(1 - a)$. The input resistance depends on the load resistance, being approximately equal to the load resistance divided by $(1 - a)$. The fact that input resistance is directly related to the load resistance is a disadvantage of this type of amplifier if the load is one whose resistance or impedance varies with frequency.

The current transfer ratio with this circuit is :

$$\frac{1}{1 - a}$$

and the cut-off frequency is the same as in the grounded-emitter circuit. The output and input currents are in phase.

PRACTICAL CIRCUIT DETAILS

The bipolar transistor is no longer restricted to use in low-voltage circuits. Many modern-day transistors have voltage ratings as high as 1400. Such transistors are useful in circuits that operate directly from the 117-volt ac line, following rectification. For this reason, battery power is no longer the primary means by which to operate transistorized equipment. Many low-voltage transistor types are capable of developing a considerable amount of af or rf power, hence draw amperes of current from the power supply. Dry batteries are seldom practical in circuits of this type. The usual approach in powering high-current, high-wattage transistorized equipment is to employ a wet-cell storage battery, or operate the equipment from a 117-volt ac line, stepping the primary voltage down to the desired level by means of a transformer, then rectifying the ac with silicon diodes.

Coupling and Impedance Matching

The methods used to couple the af or rf signal into and out of transistor amplifier stages are similar to those used with vacuum tubes. With FETs the impedance values are similar to those of tubes, but when working with bipolar transistors the base and collector values can be as low as a few ohms. This dictates a need for special techniques if efficient power transfer is to be had. When working with tubes the impedance of the input and output elements is high because the voltages used are relatively high, and the element currents are low. To develop comparable power output from a bipolar transistor it is necessary to have the device draw high current, and since the transistor is designed for low-voltage operation the impedance of the circuit must therefore be low, assuming that the stage is intended as a power amplifier, and that it will be used in the common-emitter mode. The input impedance can be increased, of course, by using a common-collector hookup. Similarly, the output impedance can be raised if one uses the common-base configuration. However, most amplifiers are connected for common-emitter operation, and the discussion, therefore, will relate to that mode.

When working with low-level audio amplifiers it is common practice to employ standard *RC* coupling techniques. The *IR* voltage drop across the collector load resistors is tolerable in most instances, and little attention is given to close

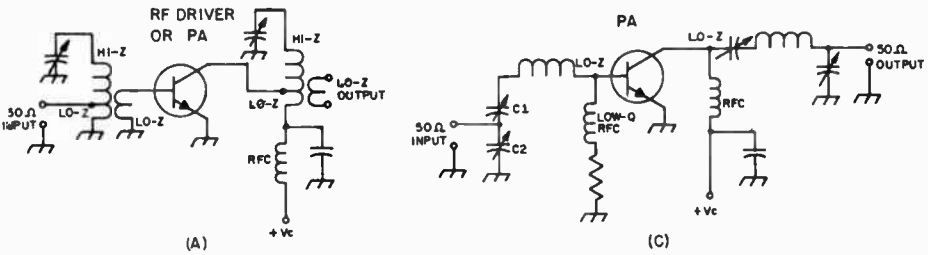

Fig. 4-15 — Techniques for obtaining an impedance match between the input port and its source, and between the output port and its load. The circuits shown here are used as rf amplifiers.

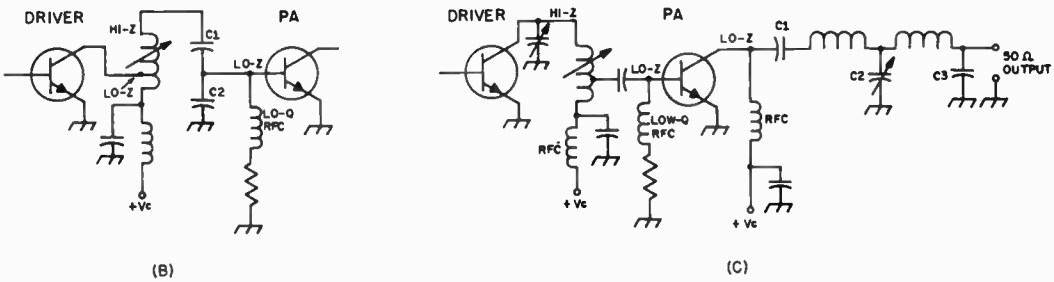

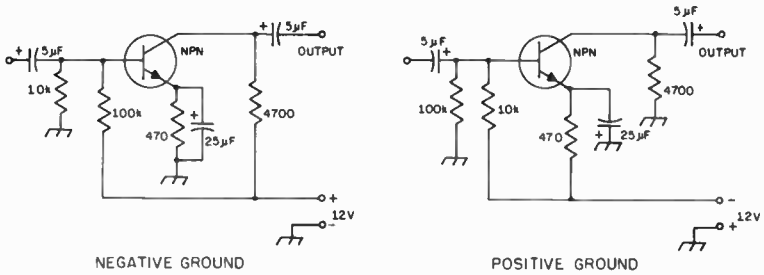

Fig. 4-16 — An example of how the circuit polarity can be changed to accomodate either a positive or negative power-supply ground. Npn transistors are shown here, but the same rules apply to pnp types.

matching of impedances. The simplicity of *RC* coupling is desirable for reasons of cost and compactness of assembly, and the loss in circuit efficiency is an acceptable design tradeoff. However, better efficiency is often a mandate in circuit design, and the use of transformers for impedance matching and coupling becomes an important consideration. *RC*-coupling techniques are seldom used at rf. Impedances are matched at rf by means of tuned transformers or networks using *LC* constants. For obtaining the collector load impedance in rf power amplifiers one must use the formula

$$R_L = \frac{V_{cc}^2}{2P_o \text{ (watts)}}$$

where R_L = Collector load impedance at resonance
V_{cc} = Dc operating voltage, collector to emitter
P_o = Desired or anticipated power output in watts

Example: A PA or driver stage must deliver 8 watts to its resistive load. The dc voltage from collector to emitter is 12 (supply voltage). The R_L is then

$$R_L = \frac{V_{cc}^2}{2P_o} = \frac{144}{16} = 9 \text{ ohms}$$

Impedance matching between the collector of the driver and the input circuit (base) of the driven stage cannot so easily be solved. This is because the input network must be able to tune out the input capacitance (C_{IN}) of the transistor, which, in combination with the package inductance of the transistor presents a reactive impedance to the driver stage. Unfortunately, this information is not always given in the specifications for a particular transistor. For this reason the matching network must have a sufficient number of circuit variables to permit the designer to adjust it for optimum power transfer. The input reactance, plus the wide range of input resistances (from a fraction of an ohm to as much as several thousand ohms), makes it difficult to offer a simple mathematical formula to use for input-network design.

Practical methods for obtaining input and output impedance matching are illustrated in Fig. 4-15. The circuits at A and C are quite basic, but do not offer as much harmonic suppression as do the circuits of B and D. Detailed information on input- and output-network design is given in *RCA Power Circuits*, Series SP-51, available from most electronic stores.

Bias and Bias Stabilization

Transistors must be forward biased in order to conduct significant current. In the npn design case the collector and base must be positive with respect to the emitter. The same is true when working with a pnp device, but the base and collector must be negative with respect to the emitter. The required bias is provided by the collector-to-emitter voltage, and by the emitter-to-base voltage. These bias voltages cause two currents to flow — emitter-to-collector current and emitter-to-base current. Either type of transistor, pnp or npn, can be used with a negative- or positive-ground power source by changing the circuit hookup as shown in Fig. 4-16. Forward bias is still properly applied in each instance. The lower the forward bias, the lower the collector current. As the forward bias is increased the collector current rises and the junction temperature increases. If the bias is continuously increased a point will be reached where the transistor becomes overloaded and burns out. This condition, called *thermal runaway* was discussed earlier in the chapter. To prevent damage to the transistor, some form of bias stabilization should be included in the design. Some practical bias-stabilization techniques are given in Fig. 4-17. At A and B, R1 in series with the emitter, is for the purpose of "swamping out" the resistance of the emitter-base diode; this swamping helps to stabilize the emitter current. The resistance of R1 should be large compared with that of the emitter-base diode, which is approximately equal to 25 divided by the emitter current in mA .

Since the current in R1 flows in such a direction as to bias the emitter negatively with respect to the base (a pnp transistor is assumed), a base-emitter bias slightly greater than the drop in R1 must be supplied. The proper operating point is achieved through adjustment of voltage divider R2R3, which is proportioned to give the desired value of no-signal collector current.

In the transformer-coupled circuit, input signal currents flow through R1 and R2, and there would be a loss of signal power at the base-emitter diode if these resistors were not bypassed by C1 and C2. The capacitors should have low reactance com-

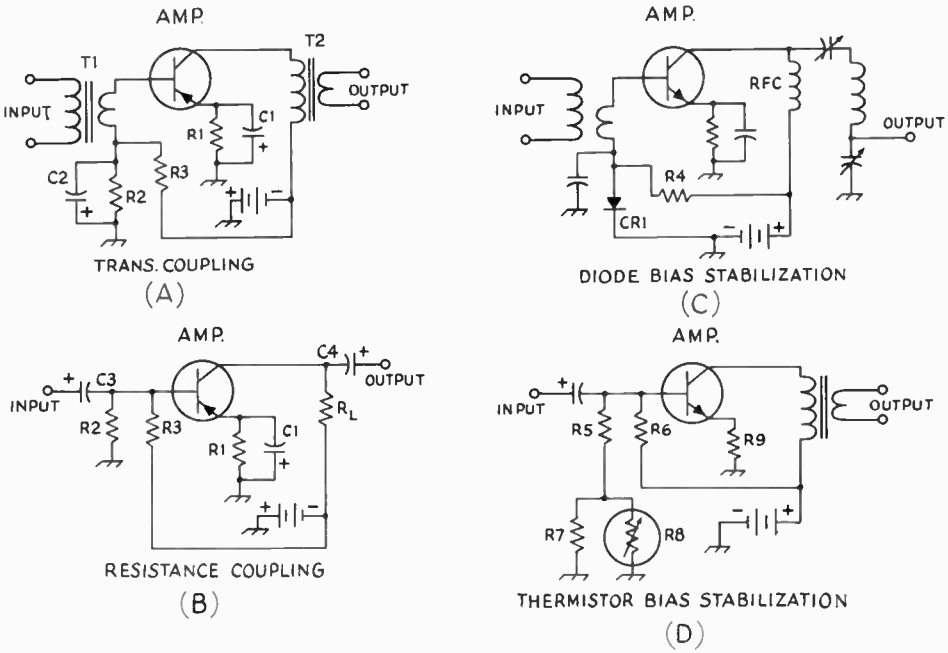

Fig. 4-17 — Examples of bias-stabilization techniques. A text discussion is given.

pared with the resistances across which they are connected. In the resistance-coupled circuit R2 serves as part of the bias voltage divider and also as part of the load for the signal-input source. As seen by the signal source, R3 is in parallel with R2 and thus becomes part of the input load resistance. C3 must have low reactance compared with the parallel combination of R2R3 and the base-to-emitter resistance of the transistor. The load impedance will determine the reactance of C4.

The output load resistance in the transformer-coupled case will be the actual load as reflected at the primary of the transformer, and its proper value will be determined by the transistor characteristics and the type of operation (Class A, B). The value of R_L in the resistance-coupled case is usually such as to permit the maximum ac voltage swing in the collector circuit without undue distortion, since Class-A operation is usual with this type of amplifier.

Transistor currents are sensitive to temperature variations, and so the operating point tends to shift as the transistor heats. The shift in operating point is in such a direction as to increase the heating, leading to thermal runaway. The heat developed depends on the amount of power dissipated in the transistor, so it is obviously advantageous in this respect to operate with as little internal dissipation as possible; i.e., the dc input should be kept to the lowest value that will permit the type of operation desired and should never exceed the rated value for the particular transistor used.

A contributing factor to the shift in operating point is the collector-to-base leakage current (usually designated I_{co}) – that is, the current that flows from the collector to base with the emitter connection open. This current, which is highly temperature sensitive, has the effect of increasing the emitter current by an amount much larger than I_{co} itself, thus shifting the operating point in such a way as to increase the collector current. This effect is reduced to the extent that I_{co} can be made to flow out of the base terminal rather than through the base-emitter diode. In the circuits of Fig. 4-17, bias stabilization is improved by making the resistance of R1 as large as possible and both R2 and R3 as small as possible, consistent with gain and power-supply economy.

It is common practice to employ certain devices in the bias networks of transistor stages to enhance bias stability. Thermistors or diodes can be used to advantage in such circuits. Examples of both techniques are given in Fig. 4-17 at C and D. Thermistors (temperature-sensitive resistors) can be used to compensate the rapid increase in collector current which is brought about by an increase in temperature. As the temperature in that part of the circuit increases, the thermistor's resistance decreases, reducing the emitter-to-base voltage (bias). As the bias is reduced in this manner, the collector current tends to remain the same, thus providing bias stabilization.

Resistors R5 and R7 of Fig. 4-17D are selected to give the most effective compensation over a particular temperature range.

A somewhat better bias-stabilization method is shown in Fig. 4-17C. In this instance, a diode is used between the base of the transistor and ground, replacing the resistor that is used in the circuits at A and B. The diode establishes a fixed value of forward bias and sets the no-signal collector current of the transistor. Also, the diode

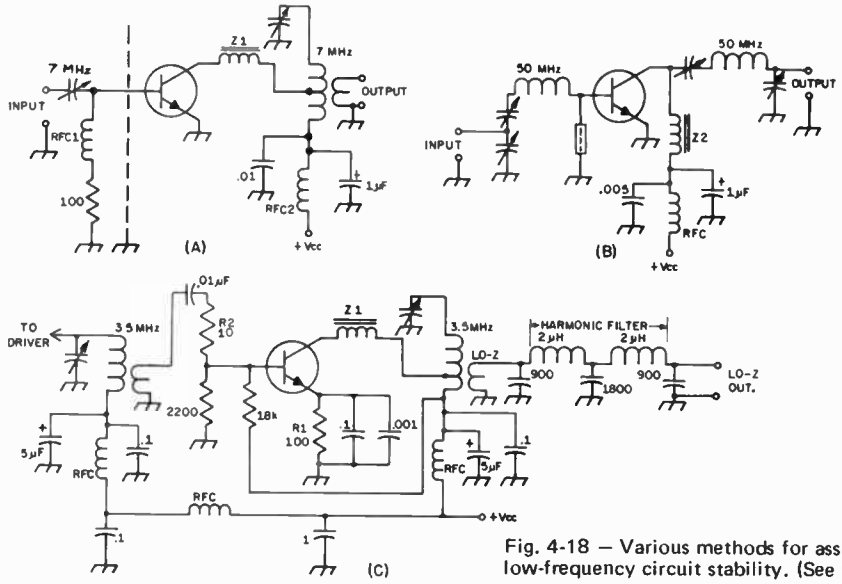

Fig. 4-18 — Various methods for assuring high- and low-frequency circuit stability. (See text.)

bias current varies in direct proportion with the supply voltage, tending to hold the no-signal collector current of the transistor at a steady value. If the diode is installed thermally close to the transistor with which it is used (clamped to the chassis near the transistor heat sink), it will provide protection against bias changes brought about by temperature excursions. As the diode temperature increases so will the diode bias current, thus lowering the bias voltage. Ordinarily, diode bias stabilization is applied to Class B stages. With germanium transistors, diode bias stabilization reduces collector-current variations to approximately one fifth of that obtainable with thermistor bias protection. With silicon transistors, the current variations are reduced to approximately one-fifteenth the thermistor-bias value.

Frequency Stability

Parasitic oscillations are a common source of trouble in transistor circuits. If severe enough in magnitude they can cause thermal runaway and destroy the transistor. Oscillation can take place at any frequency from just above dc to the f_T of the device, and these parasitics can often pass unnoticed if the waveforms are not examined with an oscilloscope. In addition to posing a potential danger to the device itself, the oscillations can cause distortion and unwanted radiation of spurious energy. In an amateur transmitter this condition can lead to violation notices from the FCC, interference to other services, and TVI. In the case of receivers, spurious energy can cause "birdies" and poor noise figures.

A transistor chosen for high-frequency operation (f_T at least five times greater than the proposed operating frequency) can easily oscillate *above* the operating frequency if feedback conditions are correct. Also, the device gain in the spectrum below the operating frequency will be very high, giving rise to low-frequency oscillation. At vhf and uhf phase shifts come into play, and this condition can encourage positive feedback, which leads to instability. At these higher frequencies it is wise to avoid the use of rf chokes and coupling capacitors whenever possible. The capacitors can cause shifts in phase (as can the base semiconductor material in the transistor), and the rf chokes, unless of very low Q, can cause a tuned-base tuned-collector condition. Some precautionary measures against instability are shown in Fig. 4-18. At A, RFC1 has its Q lowered by the addition of the 100-ohm series resistor. Alternatively, RFC1 could be shunted by a low-value resistor, but at some sacrifice in driving power. One or more ferrite beads can be slipped over the pigtail of an rf choke to lower the Q of the inductor. This method may be preferred in instances where the addition of a low-value resistor might establish an undesirable bias condition, as in the base return of a Class C stage. Parasitic choke Z1 consists of three ferrite beads slipped over a short piece of wire. The choke is installed as close to the collector terminal as possible. This low-Q choke will help prevent vhf or uhf instability. RFC2 is part of the decoupling network in the collector supply lead. It is bypassed for the operating frequency by means of the .01-µF capacitor, but is also bypassed for low frequencies by the addition of the 1-µF capacitor. In the vhf amplifier at B, Z1 and Z2 are ferrite-bead chokes. They present a high impedance to the base and collector elements, but because they are low-Q chokes there is little chance for them to permit a tuned-base tuned-collector oscillation. At C, the stage operates Class A, a typical arrangement in the low-level section of a transmitter, and the emitter is above ground by virtue of bias resistor R1. It must be bypassed to

assure maximum stage gain. Here the emitter is bypassed for the operating frequency and for vhf. By not bypassing the emitter for low frequencies the stage is degenerative at lf. This will lessen the chance of low-frequency oscillation. The supply leads, however, are bypassed for the operating frequency and for lf, thus preventing unwanted feedback between stages along the supply leads. Z1 is a ferrite-bead vhf/uhf parasitic choke. The 10-ohm resistor, R2, also helps suppress vhf parasitics. The emitter lead should be kept as short as possible in all three circuits to enhance stability and to prevent degeneration at the operating frequency. It is wise to use rf shields between the input and output halves of the rf amplifier stage to prevent unwanted coupling between the base and collector tuned circuits. At operating frequencies where toroid cores are suitable, the shields can often be omitted if the tuned circuits use toroidal inductors. Toroidal transformers and inductors have self-shielding properties – an asset to the designer.

FIELD-EFFECT TRANSISTORS

Still another semiconductor device, the field-effect transistor, (FET) is superior to bipolar transistors in many applications because it has a high input impedance, its characteristics more nearly approach those of a vacuum tube.

The Junction FET

Field-effect transistors are divided into two main groups: junction FETs, and insulated-gate FETs. The basic JFET is shown in Fig. 4-19.

The reason for the terminal names will become clear later. A dc operating condition is set up by starting a current flow between source and drain. This current flow is made up of free electrons since the semiconductor is n-type in the channel, so a positive voltage is applied at the drain. This positive voltage attracts the negatively charged free electrons and the current flows (Fig. 4-20). The next step is to apply a gate voltage of the polarity shown in Fig. 4-20. Note that this reverse-biases the gates with respect to the source, channel, and drain. This reverse-bias gate voltage causes a depletion layer to be formed which takes up part of the channel, and since the electrons now have less volume in which to move the resistance is greater and the current between source and drain is reduced. If a large gate voltage is applied the depletion regions meet, causing pinch off, and consequently the source-drain current is reduced

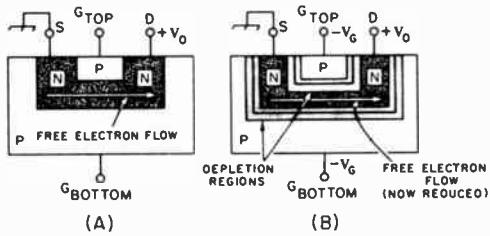

Fig. 4-20 – Operation of the JFET under applied bias. A depletion region (light shading) is formed, compressing the channel and increasing its resistance to current flow.

nearly to zero. Since the large source-drain current changed with a relatively small gate voltage, the device acts as an amplifier. In the operation of the JFET, the gate terminal is never foward biased, because if it were the source-drain current would all be diverted through the forward-biased gate junction diode.

The resistance between the gate terminal and the rest of the device is very high, since the gate terminal is always reverse biased, so the JFET has a very high input resistance. The source terminal is the *source* of current carriers, and they are *drained* out of the circuit at the drain. The gate *opens* and *closes* the amount of channel current which flows in the pinch-off region. Thus the operation of a FET closely resembles the operation of the vacuum tube with its high grid input impedance. Comparing the JFET to a vacuum tube, the source corresponds to the cathode, the gate to the grid, and the drain to the plate.

Insulated-Gate FET

The other large family which makes up field-effect transistors is the insulated-gate FET, or IGFET, which is pictured schematically in Fig. 4-21. In order to set up a dc operating condition, a positive polarity is applied to the drain terminal. The substrate is connected to the source, and both are at ground potential, so the channel electrons are attracted to the positive drain. In order to regulate this source-drain current, voltage is applied to the gate contact. The gate is insulated from the rest of the device by a layer of very thin dielectric material, so this is not a p-n junction between the gate and the device – thus the name insulated gate. When a negative gate polarity is applied, positive-charged holes from the p-type substrate

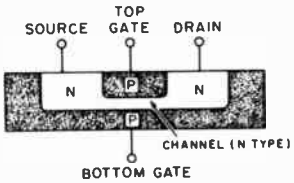

Fig. 4-19 – The junction field-effect transistor.

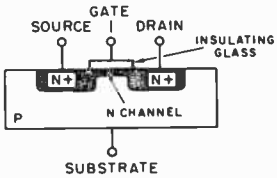

Fig. 4-21 – The insulated-gate field-effect transistor.

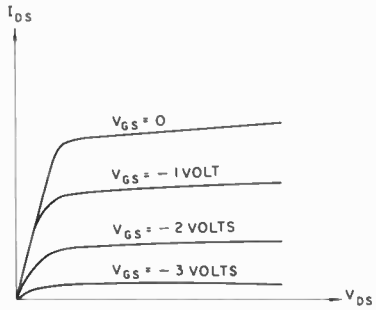

Fig. 4-21A—Typical JFET characteristic curves.

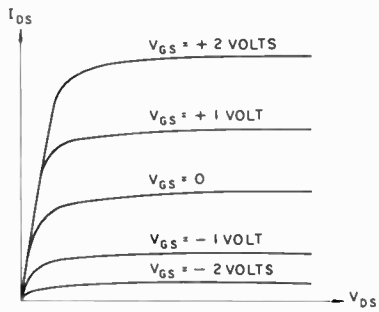

Fig. 4-21B—Typical IGFET characteristic curves.

are attracted toward the gate and the conducting channel is made more narrow; thus the source-drain current is reduced. When a positive gate voltage is connected, the holes in the substrate are repelled away, the conducting channel is made larger, and the source-drain current is increased. The IGFET is more flexible since either a positive or negative voltage can be applied to the gate. The resistance between the gate and the rest of the device is extremely high because they are separated by a layer of thin dielectric. Thus the IGFET has an extremely high input impedance. In fact, since the leakage through the insulating material is generally much smaller than through the reverse-biased p-n gate junction in the JFET, the IGFET has a much higher input impedance. Typical values of R_{in} for the IGFET are over a million megohms, while R_{in} for the JFET ranges from megohms to over a thousand megohms. There are both single-gate and dual-gate MOSFETs available. The latter has a signal gate, Gate 1, and a control gate, Gate 2. The gates are effectively in series making it an easy matter to control the dynamic range of the device by varying the bias on Gate 2. Dual-gate MOSFETs are widely used as agc-controlled rf and i-f amplifiers, as mixers and product detectors, and as variable attenuators. The isolation between the gates is relatively high in mixer service. This helps lessen oscillator "pulling" and reduces oscillator radiation. The forward transadmittance (transconductance, or g_m) of modern MOSFETs is as high as 18,000, and they are designed to operate efficiently well into the uhf spectrum.

Characteristic Curves

The characteristic curves for the FETs described above are shown in Figs. 4-21A and 4-21B, where drain-source current is plotted against drain-source voltage for given gate voltages.

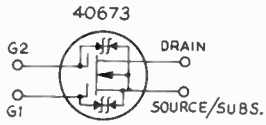

Fig. 4-22 — Schematic presentation of a gate-protected IGFET. Back-to-back Zener diodes are bridged internally from gates 1 and 2 to the source/substrate element.

Classifications

Field-effect transistors are classed into two main groupings for application in circuits, ENHANCEMENT MODE and DEPLETION MODE. The enhancement-mode devices are those specifically constructed so that they have *no* channel. They become useful only when a gate voltage is applied that causes a channel to be formed. IGFETs can be used as enhancement-mode devices since both polarities can be applied to the gate without the gate becoming forward biased and conducting.

A depletion-mode unit corresponds to Figs. 4-19 and 4-21 shown earlier, where a channel exists with no gate voltage applied. For the JFET we can apply a gate voltage and deplete the channel, causing the current to decrease. With the IGFET we can apply a gate voltage of either polarity so the device can be depleted (current decreased) or enhanced (current increased).

To sum up, a depletion-mode FET is one which has a channel constructed; thus it has a current flow for zero gate voltage. Enhancement-mode FETs are those which have no channel, so no current flows with zero gate voltage.

Gate-Protected FETs

Most JFETs are capable of withstanding up to 80 volts pk-pk from gate to source before junction damage occurs. Insulated-gate FETs, however, can be damaged by allowing the leads to come in contact with plastic materials, or by the simple act of handling the leads with one's fingers. Static charges account for the foregoing, and the damage takes the form of punctured dielectric between the gate or gates and the remainder of the internal elements. Devices of the MFE3006 and 3N140 series are among those which can be easily damaged.

Gate-protected IGFETs are currently available, and their gates are able to withstand pk-pk voltages (gate to source) of up to 10. Internal Zener diodes are connected back to back from each gate to the source/substrate element. The 40673 and 3N200 FETs are among the types which have built-in Zener diodes. Dual-gate MOSFETs which are gate-protected can be used as single-gate protected FETs by connecting the two gate leads in parallel. A gate-protected MOSFET is shown schematically in Fig. 4-22.

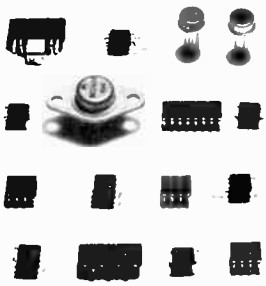

A collection of modern ICs. Various case styles of metal and epoxy materials are illustrated.

INTEGRATED CIRCUITS

Just as the term implies, integrated circuits (ICs) contain numerous components which are manufactured in such a way as to be suitably interconnected for a particular application, and on one piece of semiconductor base material. The various elements of the IC are comprised of bi-polar transistors, MOSFETs, diodes, resistances, and capacitances. There are often as many as ten or more transistors on a single IC chip, and frequently their respective bias resistors are formed on the chip. Generally speaking, ICs fall into four basic categories – differential amplifiers, operational amplifiers, diode or transistor arrays, and logic ICs.

IC Structures

The basic IC is formed on a uniform chip of n-type or p-type silicon. Impurities are introduced into the chip, their depth into it being determined by the diffusion temperature and time. The geometry of the plane surface of the chip is determined by masking off certain areas, applying photochemical techniques, and applying a coating of insulating oxide. Certain areas of the oxide coating are then opened up to allow the formation of interconnecting leads between sections of the IC. When capacitors are formed on the chip, the oxide serves as the dielectric material. Fig. 4-23 shows a representative three-component IC in both pictorial and schematic form. Most integrated circuits are housed in TO-5 type cases, or in flat-pack epoxy blocks. ICs may have as many as 12 or more leads which connect to the various elements on the chip.

Types of IC Amplifiers

Some ICs are called differential amplifiers and others are known as operational amplifiers. The basic differential-amplifier IC consists of a pair of transistors that have similar input circuits. The inputs can be connected so as to enable the transistors to respond to the difference between two voltages or currents. During this function, the circuit effectively suppresses like voltages or currents. For the sake of simplicity we may think of the differential pair of transistors as a push-pull amplifier stage. Ordinarily, the differential pair of transistors are fed from a controlled, constant-current source (Q3 in Fig. 4-24A. Q1 and Q2 are the differential pair in this instance). Q3 is commonly called a transistor current sink. Excellent balance exists between the input terminals of differential amplifiers because the base-to-emitter voltages and current gains (beta) of

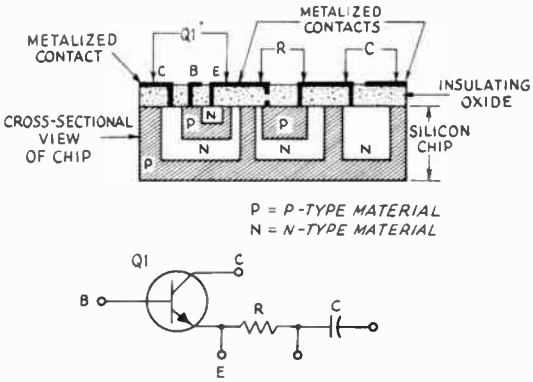

Fig. 4-23 – Pictorial and schematic illustrations of a simple IC device.

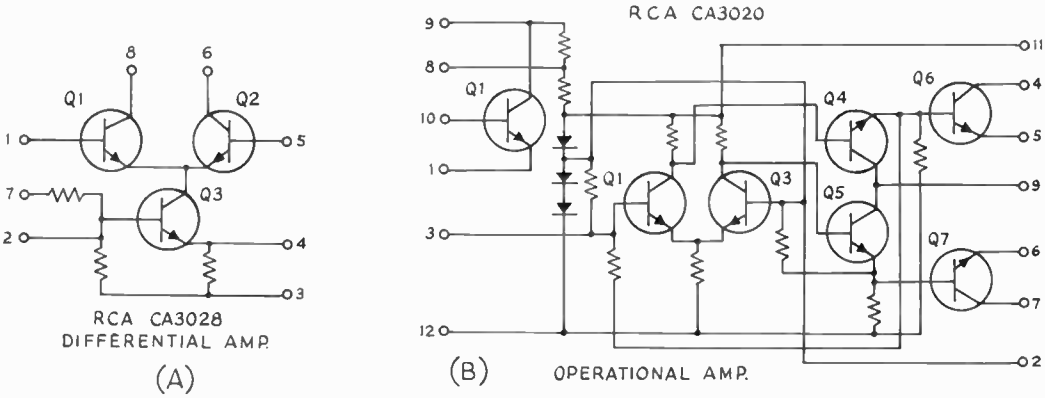

Fig. 4-24 – At A, a representative circuit for a typical differential IC. An Operational Amplifier IC is illustrated at B, also in representative form.

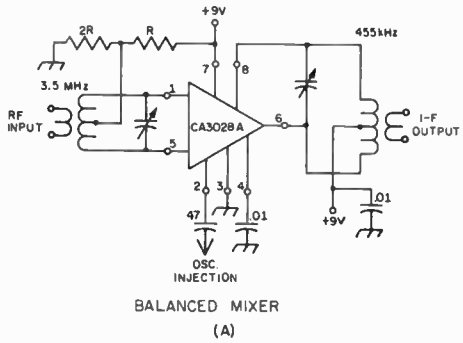

BALANCED MIXER

(A)

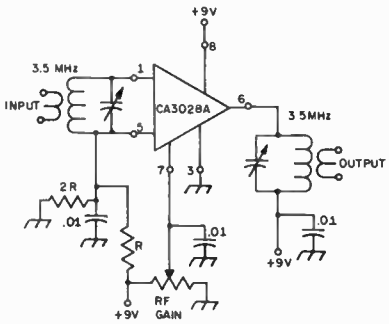

BALANCED DIFFERENTIAL AMPLIFIER

(B)

Fig. 4-25 – Some typical circuit applications for a differential amplifier IC. The internal circuit of the CA3028A IC is given in Fig. 4-24 at A.

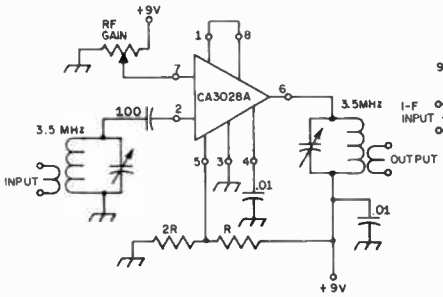

CASCODE AMP.

(C)

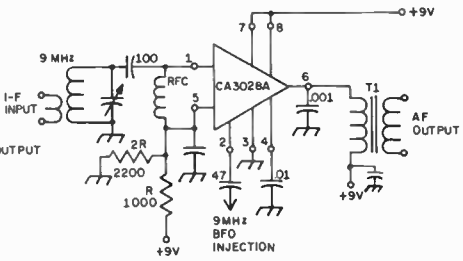

PRODUCT DETECTOR

(D)

the two transistors are closely matched. The match results from the fact that the transistors are formed next to one another on the same silicon chip.

Differential ICs are useful as linear amplifiers from dc to the vhf spectrum, and can be employed in such circuits as limiters, product detectors, frequency multipliers, mixers, amplitude modulators, squelch, rf and i-f amplifiers, and even in signal-generating applications. Although they are designed to be used as differential amplifiers, they can be used in other types of circuits as well, treating the various IC components as discrete units.

Operational-amplifier ICs are basically very-high-gain direct-coupled amplifiers that rely on feedback for control of their response characteristics. They contain cascaded differential amplifiers of the type shown in Fig. 4-24A. A separate output stage, Q6–Q7, Fig. 4-24B, is contained on the chip. Although operational ICs can be successfully operated under open-loop conditions, they are generally controlled by externally applied negative feedback. Operational amplifiers are most often used for video amplification, as frequency-shaping (peaking, notching, or bandpass) amplifiers, or as integrator, differentiator, or comparator amplifiers. As is true of differential ICs, operational ICs can be used in circuits where they components are treated as discrete units.

Diode ICs are also being manufactured in the same manner as outlined in the foregoing section. Several diodes can be contained on a single silicon wafer to provide a near-perfect match between diode characteristics. The diode arrangement can take the form of a bridge circuit, series-connected groups, or as separate components. Diode ICs of this kind are useful in balanced-modulator circuits, or to any application requiring closely matched diodes.

Fig. 4-25 demonstrates the versatility of just one type of IC, an RCA CA3028A differential amplifier. Its internal workings are shown in Fig. 4-24A, permitting a comparison of the schematic diagram and the block representations of Fig. 4-25. The circuit at B in Fig. 4-25 is characterized by its high input and output impedances (several thousand ohms), its high gain, and its stability. This circuit can be adapted as an audio amplifier by using transformer or RC coupling. In the circuits of B and C terminal 7 is used to manually control the rf gain, but agc can be applied to that terminal instead. In the circuit at D the CA3028A provides low-noise operation and exhibits good conversion gain as a product detector. The CA3028A offers good performance from dc to 100 MHz.

PRACTICAL CONSIDERATIONS

Some modern-day ICs are designed to replace nearly all of the discrete components used in earlier composite equipment. One example can be seen in the RCA CA3089E flat-pack IC which contains nearly the entire circuit for an fm receiver. The IC contains 63 bipolar transistors, 16

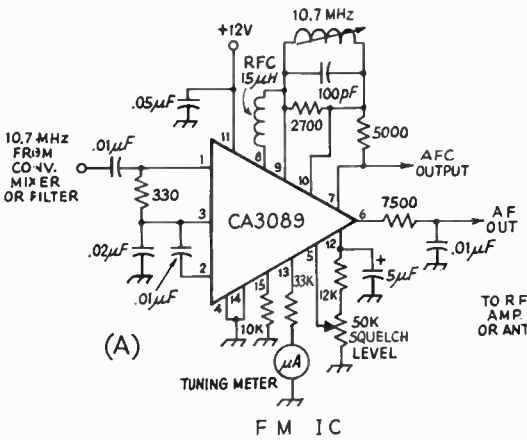

Fig. 4-26 — Complex modern ICs can be used to advantage in miniature radio equipment. The circuit at A is that of an fm module which needs few additional components to complete a receiver. Shown at B is an IC which contains the major elements for building an a-m receiver.

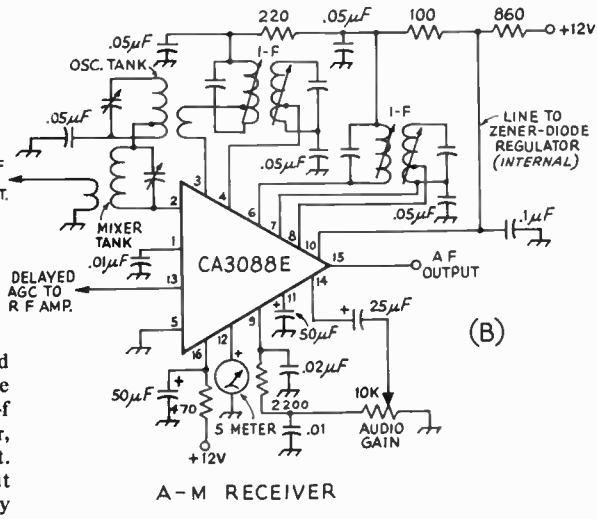

diodes, and 32 resistors. The CA3089E is designed for an i-f of 10.7 MHz and requires but one outboard tuned circuit. The chip consists of an i-f amplifier, quadrature detector, audio preamplifier, agc, afc, squelch, and a tuning-meter circuit. Limiting of -3 dB takes place at the 12-μV input level. When using an IC of this kind it is necessary only to provide a front-end converter for the desired frequency of reception, an audio amplifier, and a power supply (plus speaker, level controls, and meter).

Another complex IC, the CA3088E, is a nearly complete a-m receiver chip (minus two i-f transformers, tuned circuits for the mixer and oscillator, audio power amplifier, gain control, and power supply). The IC contains a converter, two i-f amplifiers, a detector, and an audio preamplifier. Terminals are available for sampling and using internally developed agc, and delayed agc for use with an outboard rf amplifier. A buffered output signal is available for operating an S meter, and a takeoff is provided for attachment of a tone control. Operating voltage can be anything from 6 to 18 volts (positive), and an internal Zener diode provides regulation of the operating voltages. With advances of this magnitude it becomes practical to build miniature communications equipment which can be made to operate as well as that which is physically large and complex.

Block diagrams of the a-m and fm ICs are shown in Fig. 4-26. The illustrations show how the external components are connected. It becomes apparent upon examination of Fig. 4-26 that either IC could be used in combination with other circuits to function as one section of a double-conversion superheterodyne receiver. Alternatively, both ICs could be employed in a single receiver package to provide reception of a-m, fm, cw, and ssb signals. A BFO circuit would, however, be required to permit reception of ssb and cw signals.

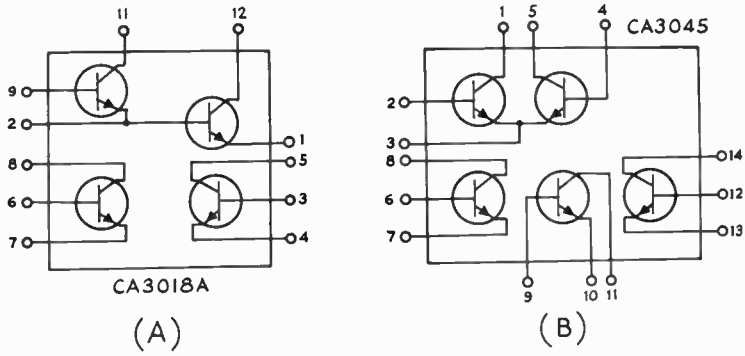

Fig. 4-27 — Transistor arrays offer unlimited application because several circuit combinations are possible. The CA3018A IC at A has a Darlington-connected pair plus two separate transistors. At B, two transistors are internally connected in a differential amplifier fashion. Three separate transistors are available for use in other functions. The arrays shown here are useful into the vhf spectrum.

Other Uses for Complex ICs

There are a number of complicated operational-amplifier ICs that are suitable for use as power-supply regulators. Terminals are available for detecting dc current overloading, thus providing automatic protection of the IC and any external pass transistors that may be used. Examples of power supplies which use regulator ICs are given in Chapter 5.

TRANSISTOR ARRAYS

Transistor arrays (several bipolar npn transistors on one chip, and with closely matched characteristics) should be of unlimited use to the designer-experimenter. Types CA3018A and CA3045 represent inexpensive array-type ICs. The former consists of two transistors arranged in a Darlington configuration, plus two separate transistors. The CA3045 is arranged to provide a differential pair of transistors and three separate transistors. Suggested uses for these devices are: frequency multiplier, VFO multistage buffer, wide-band amplifier, low-power transmitter, amplifier/limiter, product detector/audio amplifier, mixer-oscillator-buffer combinations. The circuits for both arrays are given in Fig. 4-27.

DIGITAL-LOGIC INTEGRATED CIRCUITS

Digital logic is the term used to describe an overall design procedure for electronic systems in which "on" and "off" are the important words, not "amplification," "detection," and other terms commonly applied to most amateur equipment. It is "digital" because it deals with discrete events that can be characterized by digits or integers, in contrast with linear systems in which an infinite number of levels may be encountered. It is "logic" because it follows mathematical laws, in which "effect" predictably follows "cause."

Just like linear integrated circuits, digital ICs are manufactured in such a way that the internal components are interconnected for particular applications. Packaging of the digital ICs is the same for their linear counterparts, with the full package range pictured earlier being used. From outward appearances, it would be impossible to tell the difference between the two types of ICs except from the identification numbers.

Linear ICs are constructed to respond to continuously variable or analog signals, such as in an amplifier. Digital devices, on the other hand, generally have active components operating only in either of two conditions – cutoff or saturation. Digital ICs find much application in on-off switching circuits, as well as in counting, computation, memory-storage, and display circuits. Operation of these circuits is based on binary mathematics, so words such as "one" and "zero" have come into frequent use in digital-logic terminology. These terms refer to specific voltage levels, and vary between manufacturers and devices. Nearly always, a "0" means a voltage near ground, while "1" means whatever the manufacturer specifies. One must distinguish between "positive logic" and "negative logic." In positive logic, a 1 is more positive than a 0, though both may be negative voltages. In negative logic, the reverse is true. Often the terms "high" and "low" are used in reference to these voltage levels. The definitions of these terms are the same for both positive and negative logic. A "high" is the most positive or least negative potential, while a "low" is the least positive or most negative.

For practical use in some applications it is desirable to convert binary data into decimal equivalents, such as in electronic counting and display systems. In other applications, such as for the graphic recording or metering of summations or products of integers, it is convenient to convert the digital data into analog equivalents. Specialized integrated circuits designed to perform these functions are also considered to be included in the digital-IC category.

LOGIC SYMBOLS

With modern microcircuit technology, hundreds of components can be packaged in a single case. Rather than showing a forest of transistors, resistors, and diodes, logic diagrams show symbols based on the four distinctive shapes given in Fig. 4-28 at A through D. These shapes may be "modified" or altered slightly, according to

From outward appearances, these three ICs appear to be identical. Although each is a *J-K* flip-flop, there are differences in their characteristics. Pictured at the left is a Texas Instruments SN74H72N integrated circuit, called a *J-K* master-slave flip-flop. (In single-unit quantities at electronic mail-order houses, this device costs approximately $4.50.) Shown in the center is a Motorola MC1027P IC, which is a 120-MHz ac-coupled *J-K* flip-flop (available for about $4.50 each). Both of these ICs might be considered "universal" flip-flops, for they may be used in a variety of ways. Shown at the right is a Motorola MC726P, a simple *J-K* flip-flop (slightly more than $1.00). (Price information is for late 1971.)

specific functions performed. Examples are shown at E through H of Fig. 4-28.

The square, Fig. 4-28D and H, may appear on logic diagrams as a rectangle. This symbol is a somewhat universal one, and thus must be identified with supplemental information to indicate the exact function. Internal labels are usually used. Common identification labels are:

FF – Flip-flop
FL – Flip-flop latch
SS – Single shot
ST – Schmitt trigger.

Other logic functions may also be represented by the square or rectangle, and the label should adequately identify the function performed. Unique identifying shapes are used for gates and inverters, so these need no labels to identify the *function.* Hardware- or package-identification information may appear inside any of the symbols on logic diagrams.

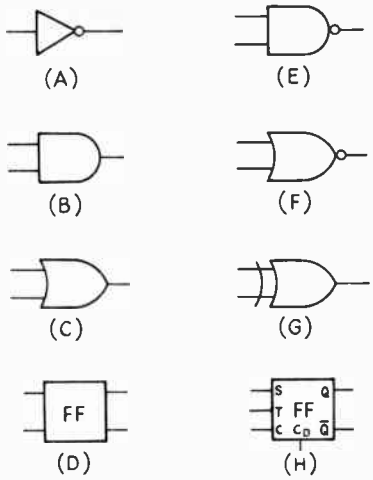

Fig. 4-28 – Distinctive symbols for digital logic diagrams. At A is shown an inverter, at B an AND gate, at C an OR gate, and at D a flip-flop. Additions to these basic symbols indicate specific functions performed. A small circle, for example, placed at the output point of the symbol, denotes that inversion occurs at the output of the device. Shown at E is an inverting AND or NAND gate, and at F is an inverting OR or NOR gate. At G is the symbol for an exclusive OR gate. The symbol at H represents a J-K flip-flop.

TYPES OF DIGITAL ICs

Digital integrated circuits perform a variety of functions, but these functions can generally be cataloged into just a few categories: gates, inverters, flip-flops, drivers and buffers, adders and subtractors, registers, and memories, plus the special-purpose ICs as mentioned earlier – decoders and converters. Some of these types, such as adders and subtractors, registers, and memories, find use primarily in computer systems. More universally used types of ICs are the inverters, gates and flip-flops.

Inverters

A single chip in one IC package may be designed to perform several functions, and these functions can be independent of each other. One example of an IC of this type is Motorola's MC789P, which bears the name, "hex inverter." This IC contains six identical inverter sections. The schematic diagram of one section is shown in Fig. 4-29A. In operation, 3.0 to 3.6 volts are applied between +Vcc and ground. For this device in positive-logic applications, a 0 is defined as any potential less than approximately 0.6 volt, and a 1 is any voltage greater than about 0.8. With a logic 0 applied at the input, the transistor will be at or near cutoff. Its output will be a potential near +Vcc, or a logic 1. If the 0 at the input is replaced by a 1, the transistor goes into saturation and its output drops nearly to ground potential; a 0 appears at the output. The output of this device is always the opposite or *complement* of the input logic level. This is sometimes called a NOT gate, because the input and output logic levels are *not* the same, under any conditions of operation.

Shown at the right in Fig. 4-29A is the logic symbol for the inverter. In all logic symbols, the connections for +Vcc and the ground return are omitted, although they are understood to be made. The proper connections are given in the manufacturer's data sheets, and, of course, must be made before the device will operate properly. In the case of all multiple-function ICs, such as the hex inverter, a single ground connection and a single +Vcc connection suffice for all sections contained in the package.

Gates

Another example of an IC containing several independent functions in one package is Motorola's MC724P, a quad 2-input gate. Four gates are contained in one chip. The schematic diagram and logic symbols for a gate section are shown at B in Fig. 4-29. As with the MC789P, a supply of 3.0 to 3.6 volts is used; for positive logic a 0 is a potential less than 0.6 volt, and a 1 is a potential greater than 0.8 volt. It may be seen from the schematic diagram that the two transistors have an independent input to each base, but they share a common collector resistor. Either transistor will be saturated with a logic 1 applied at its input, and a 0 output will result. A 0 at the input of either transistor will cause that transistor to be cut off, but a 1 at the opposite input will hold the output at 0. Thus, a 1 at either Input 1 *or* Input 2 will cause a 0 (or a NOT 1) to appear at the output. The NOT functions are usually written with a bar over them, so $\overline{1}$ means the same thing as NOT 1,

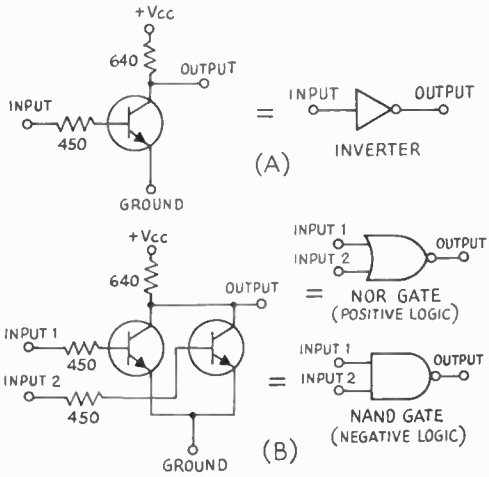

Fig. 4-29 — Digital circuits and their equivalent logic symbols. See text. Indicated resistor values are typical.

and is expressed as NOT 1 when reading the term. Logic-circuit operation can be expressed with equations. Boolean algebra, a form of binary mathematics, is used. These equations should not be confused with ordinary algebraic equations. The logic equation for the operation of the circuit in Fig. 4-28A is $1 \vee 1 = \overline{1}$. The little $\vee$ means OR. Sometimes "+" is used instead of "$\vee$." In plain words, the equation says that a 1 at Input 1 *or* Input 2 will yield a NOT 1 at the output. This is equivalent of saying the circuit is an inverting OR gate, or a NOT OR gate. This latter name is usually contracted to NOR gate, the name by which the circuit is known.

If the circuit of Fig. 4-29B is used with negative logic, circuit operation remains the same; only the definitions of terms are changed. A logic 1, now, is a voltage level less than 0.6, and a 0 is a level greater than 0.8 volt. If a logic 1 is applied at both inputs, 1 *and* 2, both transistors will be cut off. The output is near +Vcc, which is a logic 0 or NOT 1. The equation for this operation is $1 \cdot 1 = \overline{1}$, where the dot means AND. In this way, with negative logic, the circuit becomes an inverting AND gate, or a NOT AND gate or, more commonly, a NAND gate. Manufacturers' literature frequently refers to this type of device as a NAND/NOR gate, because it performs either function.

Flip-Flops

It is not necessary for the various functions on a single chip to be identical. Motorola's MC780P IC, a decade up-counter, contains four flip-flops, an inverter, and a 2-input gate. These functions are interconnected to provide divide-by-10 operation, with ten input pulses required for every output pulse which appears. Intermediate outputs are also provided (in binary-coded form) so that the number of pulses which have entered the input can be determined at all times. These binary-coded decimal (BCD) outputs, after decoding, may be used to operate decimal-readout indicators.

The term, medium-scale integration (MSI) is frequently applied to ICs such as this decade up-counter, which contains the equivalent of 15 or more gates on a single chip. Large-scale integration (LSI) describes ICs containing the equivalent of 100 or more gates on a single chip. These terms, when applied to a particular IC, convey an idea of the complexity of the circuitry.

A flip-flop is a device which has two outputs that can be placed in various 1 and 0 combinations by various input schemes. Basically, one output is a 1 when the other is a 0, although situations do occur (sometimes on purpose) where both outputs are alike. One output is called the Q output, or "set" output, while the other is the $\overline{Q}$ (NOT Q) or "reset" output. If $Q = 1$ and $\overline{Q} = 0$, the flip-flop is said to be "set" or in the "1 state," while for the reverse, the flip-flop is "reset," or "cleared," or in the "0 state." A variety of inputs exist, from which the flip-flops derive their names.

The *R-S* flip-flop is the simplest type. Its outputs change directly as a result of changes at its inputs. The type *T* flip-flop "toggles," "flips," or changes its state during the occurrence of a *T* pulse, called a clock pulse. The *T* flip-flop can be considered as a special case of the *J-K* flip-flop described later. The type *D* flip-flop acts as a storage element. When a clock pulse occurs, the complementary status of the *D* input is transferred to the *Q* output. The flip-flop remains in this state even though the input may change, as it can change states only when a clock pulse occurs.

Although there is some disagreement in the nomenclature, a *J-K* flip-flop is generally considered to be a toggled or clocked *R-S* flip-flop. It may also be used as a storage element. The *J* input is frequently called the "set" or *S* input; the *K* is called the "clear" or *C* input (not to be confused with the clock input). The clock input is called *T*, as in the type *T* flip-flop. A clear-direct or C_D input which overrides all other inputs to clear the flip-flop to 0 is provided in most *J-K* flip-flop packages. The logic symbol for the *J-K* flip-flop is shown in Fig. 4-28H. A simple *J-K* flip-flop circuit contains 13 or 14 transistors and 16 or 18 resistors.

There are essentially two types of flip-flop inputs, the dc or level-sensitive type, and the "ac" or transistion-sensitive type. It should not be concluded that an ac input is capacitively coupled. This was true for the discrete-component flip-flops, but capacitors just do not fit into microcircuit dimensions. The construction of an ac input uses the "master-slave" principle, where the actions of a master flip-flop driving a slave flip-flop are combined to produce a shift in the output level during a transit of the input.

DIGITAL-LOGIC IC FAMILIES

There are seven categories or families of which nearly all semiconductor digital ICs are members.

Each family has its own inherent advantages and disadvantages. Each is geared to its own particular market, meeting a specific set of needs.

Resistor-Transistor Logic – RTL

RTL is known primarily for its economy. It is well named, since it contains resistors and transistors exclusively. The circuits of Fig. 4-29 are RTL. Advantages of the RTL family are economy, ease of use in system designs, ease of interface with discrete components, and high speed–power product. There are a wide number of functions available in this family. Disadvantages are low immunity to voltage noise (transients, rf pickup, and the like), and relatively low fanout (the number of loads that may be connected to an output before performance is degraded). The RTL family requires a supply of 3.0 to 3.6 volts.

Diode-Transistor Logic – DTL

DTL ICs contain diodes, as well as resistors and transistors. Early DTL ICs used design criteria carried over from the use of discrete components, where diodes were inexpensive compared to transistors. These ICs required negative and positive voltage sources. Later DTL ICs are of a modified design which lends itself more easily to IC processing. Performance characteristics are also enhanced, with less input current being required, and only a single voltage source needed. Members of the DTL family are limited generally to gates. Advantages of this family are low power dissipation, compatibility with TTL (see later section), low cost, ease of use in system design, ease of interface with discrete circuits, and relatively high fanout. DTL disadvantages are low noise immunity, especially in the high state where the input impedance is relatively high, rapid change in voltage thresholds with temperature, speed slowdown with capacitive loading, and lower speed capabilities than some other families. The DTL family requires a supply voltage of 5.

High-Threshold Logic – HTL

HTL devices are designed for high noise immunity. The circuit form is the same as DTL except that breakdown (Zener) diodes are used at the inputs. Higher supply voltages and higher power dissipations accompany the HTL family. These ICs find applications in industrial environments and locations likely to have high electrical noise levels. Advantages are high noise immunity, stable operation over very large temperature ranges, interfaces easily with discrete components, electromechanical components, and linear functions (operational amplifiers and multipliers), and a constant threshold-versus-temperature characteristic. Disadvantages are higher cost than other families, and relatively high power dissipation. The HTL family requires a supply voltage of 15.

Transistor-Transistor Logic –TTL

TTL has characteristics that are similar to DTL, and is noted for many complex functions and the highest available speed of any saturated logic. TTL may be thought of as a DTL modification that results in higher speed and driving capability. It is noted for better noise immunity than that offered by DTL, and is more effective for driving high-capacitance loads because of its low output impedance in both logic states. TTL ICs fall into two major categories – medium speed and high speed. Various manufacturing techniques are used to increase the speed, including gold doping and incorporation of high-speed Schottky diodes on the chip. Another advantage of TTL is that it is compatible with various other families. Multiple sources and extensive competition have resulted in low prices for TTL devices. Disadvantages are that more care is required in the layout and mechanical design of systems because of its high speed, and additional capacitors are required for bypassing because of switching transients. The TTL family requires a supply of 5 volts.

Emitter-Coupled Logic – ECL

ECL has the highest speed of any of the logic forms. It is sometimes called current-mode logic. This family is different from standard saturating logic in that circuit operation is analogous to that of some linear devices. In this case, the transistors do not saturate and the logic swings are reduced in amplitude. Very high speeds can be attained because of the small voltage swings and the use of nonsaturating transistors. The input circuitry of ECL devices is of the nature of a differential amplifier, resulting in much higher input impedances than saturated-logic devices. Emitter-follower outputs are of low impedance with high fanout capabilities, and are suited for driving 50-ohm transmission lines directly. Disadvantages are higher power dissipation, less noise immunity than some saturated logic, translators are required for interfacing with saturated logic, and slowed-down operation with heavy capacitive loading. The ECL family requires a supply of -5.2 volts.

Metal-Oxide Semiconductor (MOS)

Digital MOS devices are gaining significance in industrial applications, with p-channel or P-MOS ICs being the most popular. Large, complex repetitive functions, such as long shift registers and high-capacity memories, have proved very practical. Gates and basic logic circuits have not become as popular, because they exhibit lower drive capability than other IC families. Input impedances to these devices are essentially capacitive (an open circuit for dc). This feature allows very high fanout where speed is not a consideration. Bidirectional devices give more flexibility to the circuit designer. P-MOS technology results in the lowest cost per bit for memories and long shift registers, because many more functions can be contained on a given chip size than in bipolar devices. Disadvantages are that devices must be handled more carefully than bipolar ICs because excessive static electricity can destroy the narrow gate oxide, even with internal breakdown-diode input protection. Drive capability is limited because of the high output

impedances characteristic of these devices. Two power supplies are usually required. The P-MOS family requires supplies of -13 and -27 volts.

Complementary Metal-Oxide Semiconductor – CMOS

CMOS technology employs both p-channel and n-channel devices on the same silicon substrate. Both types are enhancement-mode devices; that is, gate voltage must be increased in the direction that inverts the surface in order for the device to conduct. Only one of the two complementary devices of a circuit section is turned on at a time, resulting in extremely low power dissipation. Dissipation is primarily from the switching of devices through the active region and the charging and discharging of capacitances. Advantages are low power dissipation, good noise immunity, very wide power supply voltage variations allowed, high fanout to other CMOS devices, and full temperature-range capabilities. Disadvantages are restricted interfacing capabilities because of high output impedance, and medium to high cost. The CMOS family requires a supply of 1.5 to 16 volts, 10 volts being nominal.

IC Family Groups

The popular digital-logic families have several groups where basic designs have been modified for medium speed, high speed, or low power consumption. The TTL family ICs have single-letter designators added to the part number to identify the group: S – Schottky high speed, H – medium speed, L – low power. ECL logic, as yet, has no such simple identification system. Manufacturers group their ECL products by propagation delay, an expression of the maximum speed at which the logic device will operate. Motorola, for example, calls the ECL group with 8-ns delay MECL. MECL II has a speed of 4 ns; MECL 10,000, 2 ns; and MECL III, 1.1 ns. With a propagation delay of 1 ns, operation at 300 MHz is possible.

Special Digital ICs

In addition to the logic families, many special-purpose digital ICs are available to accomplish specific tasks. A divide-by-10 circuit, such as the Fairchild U6B95H9059X, operates up to 320 MHz and is used as a prescaler to extend the range of a frequency counter. This IC has been designed to operate with low-level input signals, typically 100 mV at 150 MHz.

This 250-MHz prescaler uses the Fairchild U6B95 H 9059X IC. A power supply and an output amplifier complete the device.

Large MOS arrays are being used for a number of applications which require the storage of logic instructions. These ICs are called memories. Instructions are stored in the memory by a process named programming. Some memories can be programmed only once; they are called ROMs (Read-Only Memory). ROMs must be read in sequence, but another group of devices called RAMs (Random-Access Memory) can be used a section at a time. Both ROMs and RAMs are also made in reprogrammable versions, where the information stored in the memory can be changed as desired. These models are named PROMs and PRAMs, respectively.

Large memory arrays are often used for the generation and conversion of information codes. One IC can be programmed to convert the 5-level RTTY code to the 8-level ASCII code popular in computer devices. National Semiconductor manufactures a single IC which generates the entire 56-character 8-level code. Several ICs are now available for character generation where letters and numerals are produced for display on an oscillograph screen.

OTHER DEVICES

THE UNIJUNCTION TRANSISTOR

Unijunction transistors (UJT) are being used by amateurs for such applications as side-tone oscillators, sawtooth generators, pulse generators, and timers.

Structurally, the UJT is built on an n-type silicon bar which has ohmic contacts – base one (B1) and base two (B2) – at opposite ends of the bar. A rectifying contact, the emitter, is attached between B1 and B2 on the bar. During normal operation B1 is grounded and a positive bias is supplied to B2. When the emitter is forward biased, emitter current will flow and the device will conduct. The symbol for a UJT is given in Fig. 4-30 at C. Circuits showing typical applications in which UJTs are employed are shown in Fig. 4-28.

SILICON CONTROLLED RECTIFIERS

The silicon controlled rectifier, also known as a Thyristor, is a four-layer (p-n-p-n or n-p-n-p)

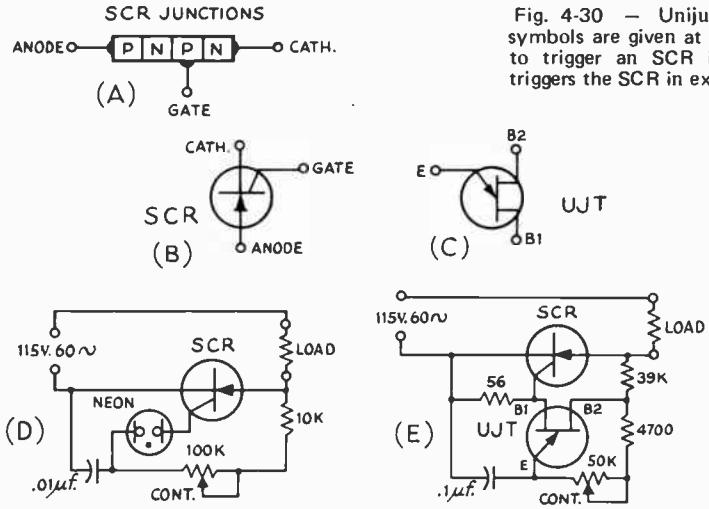

Fig. 4-30 — Unijunction transistor and SCR symbols are given at B and C. A neon lamp is used to trigger an SCR in the circuit at D. A UJT triggers the SCR in example E.

three-electrode semiconductor rectifier. The three terminals are called anode, cathode and gate, Fig. 4-28B.

The SCR differs from the silicon rectifier in that it will not conduct until the voltage exceeds the *forward breakover* voltage. The value of this voltage can be controlled by the gate current. As the gate current is increased, the value of the forward breakover voltage is decreased. Once the rectifier conducts in the forward direction, the gate current no longer has any control, and the rectifier behaves as a low-forward-resistance diode. The gate regains controls when the current through the rectifier is cut off, as during the other half cycle.

The SCR finds wide use in power-control applications and in time-delay circuits. SCRs are available in various voltage and wattage ratings.

TRIACS

The triac, similar to the SCR, has three electrodes – the main terminal (No. 1), another main terminal (No. 2), and a gate. The triac performs in the same manner as the SCR, but for either polarity of voltage applied to its main terminals. The SCR, as mentioned in the foregoing, conducts only during one half the sine-wave cycle. When an SCR is used in a motor-speed control, therefore, the motor cannot be brought up to full speed. The triac, however, does trigger on both halves of the cycle. Therefore, triacs are preferred to SCRs in many control circuits. The triac can be regarded as a device in which two SCRs are employed in parallel and oriented in opposite directions as shown in the drawing of Fig. 4-30. An example of a motor-speed control which uses a triac is given in the construction chapter of this book.

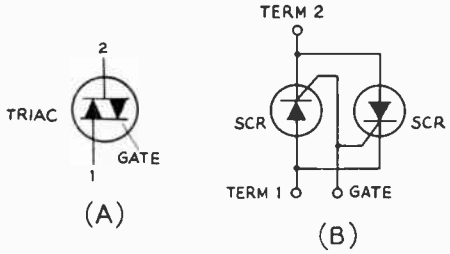

Fig. 4-31 — The symbol for a triac is given at A. The illustration at B shows how a triac compares to two SCRs connected for the same performance offered by a triac, thus permitting conduction during both halves of the cycle.

Semiconductor Bibliography

Garrett, "Integrated-Circuit Digital Logic Families," in three parts, *IEEE Spectrum*, October, November, and December, 1970.

Heilweil, *Introduction to Boolean Algebra and Logic Design*, McGraw-Hill, 1964.

Maley, *Manual of Logic Circuits*, Prentice-Hall, 1970.

Pike, "The Operational Amplifier," Parts I and II, *QST*, August and September, 1970.

Pos, "Digital Logic Devices," *QST*, July, 1968.

Pos, "Integrated-Circuit Flip-Flops," *QST*, February, 1971.

RCA Transistor, Thyristor, and Diode Manual, Series SC-14, RCA, Harrison, NJ 07029.

RCA Power Circuits, DC to Microwaves, Series SP-51, RCA, Harrison, NJ 07029.

RCA Linear Integrated Circuits, Series IC-42, RCA, Harrison, NJ 07029.

RCA Hobby Circuits Manual, Series HM-91, RCA, Harrison, NJ 07029.

Solid-State Communications McGraw-Hill.

Transistor Circuit Design, McGraw-Hill.

Malmstadt and Enke, *Digital Electronics for Scientists*, W. A. Benjamin, Inc., New York, NY 10016.

Malmstadt and Enke, *A Laboratory Workbook* (computer logic). W. A. Benjamin, Inc., New York, NY 10016.

ABBREVIATED SEMICONDUCTOR SYMBOL LIST

BIPOLAR TRANSISTOR SYMBOLS

C_{ibo} – Input capacitance, open circuit (common base)
C_{ieo} – Input capacitance, open circuit (common emitter)
C_{obo} – Output capacitance, open circuit (common base)
C_{oeo} – Output capacitance, open circuit (common emitter)
f_c – Cutoff frequency
f_T – Gain-bandwidth product (frequency at which small-signal forward current-transfer ratio, common emitter, is unity, or 1)
g_{me} – Small-signal transconductance (common emitter)
h_{FB} – Static forward-current transfer ratio (common base)
h_{fb} – Small-signal forward-current transfer ratio, short circuit (common base)
h_{FE} – Static forward-current transfer ratio (common emitter)
h_{fe} – Small-signal forward-current transfer ratio, short circuit (common emitter)
h_{IE} – Static input resistance (common emitter)
h_{ie} – Small-signal input impedance, short circuit (common emitter)
I_b – Base current
I_c – Collector current
I_{CBO} – Collector-cutoff current, emitter open
I_{CEO} – Collector-cutoff current, base open
I_E – Emitter current
MAG – Maximum available amplifier gain
P_{CE} – Total dc or average power input to collector (common emitter)
P_{OE} – Large-signal output power (common emitter)
R_L – Load resistance
R_s – Source resistance
V_{BB} – Base-supply voltage
V_{BC} – Base-to-collector voltage
V_{BE} – Base-to-emitter voltage
V_{CB} – Collector-to-base voltage
V_{CBO} – Collector-to-base voltage (emitter open)
V_{CC} – Collector-supply voltage
V_{CE} – Collector-to-emitter voltage
V_{CEO} – Collector-to-emitter voltage (base open)
$V_{CE(sat)}$ – Collector-to-emitter saturation voltage
V_{EB} – Emitter-to-base voltage
V_{EBO} – Emitter-to-base voltage (collector open)
V_{EE} – Emitter-supply voltage
Y_{fe} – Forward transconductance
Y_{ie} – Input Admittance
Y_{oe} – Output Admittance

FIELD-EFFECT TRANSFER SYMBOLS

A – Voltage amplification
C_c – Intrinsic channel capacitance
C_{ds} – Drain-to-source capacitance (includes approximately 1-pF drain-to-case and interlead capacitance)
C_{gd} – Gate-to-drain capacitance (includes 0.1-pF interlead capacitance)
C_{gs} – Gate-to-source interlead and case capacitance
C_{iss} – Small-signal input capacitance, short circuit
C_{rss} – Small-signal reverse transfer capacitance, short circuit
g_{fs} – Forward transconductance
g_{is} – Input conductance
g_{os} – Output conductance
I_D – Dc drain current
$I_{DS(OFF)}$ – Drain-to-source OFF current
I_{GSS} – Gate leakage current
r_c – Effective gate series resistance
$r_{DS(ON)}$ – Drain-to-source ON resistance
r_{gd} – Gate-to-drain leakage resistance
r_{gs} – Gate-to-source leakage resistance
V_{DB} – Drain-to-substrate voltage
V_{DS} – Drain-to-source voltage
V_{GB} – Dc gate-to-substrate voltage
V_{GB} – Peak gate-to-substrate voltage
V_{GS} – Dc gate-to-source voltage
V_{GS} – Peak gate-to-source voltage
$V_{GS(OFF)}$ – Gate-to-source cutoff voltage
Y_{fs} – Forward transadmittance $\approx g_{fs}$
Y_{os} – Output admittance
Y_L – Load admittance

Chapter 5

Power Supply Theory and Practice

Power-line voltages have been "standardized" throughout the U.S. at 115 – 230 V in residential areas where a single voltage phase is supplied. These figures represent nominal voltages, however. "Normal" line voltage in a particular area may be between approximately 110 and 125 volts, but generally will be above 115 volts. In many states, the service is governed by the state's public utilities commission. The voltage average across the country is approximately 117 volts. Source of information: Edison Electric Company (an association of power companies), New York, NY.

The electrical power required to operate amateur radio equipment is usually taken from the ac lines when the equipment is operated where this power is available; in mobile operation the prime source of power is usually the storage battery.

The high-voltage dc for the plates of vacuum tubes used in receivers and transmitters is derived from the commercial ac lines by the use of a transformer-rectifier-filter system. The transformer changes the voltage of the ac to a suitable value, and the rectifier converts it to pulsating dc. The filter reduces the pulsations to a suitably low level, and may have either a capacitor input or a choke input, depending on whether a shunt capacitor or a series inductor is the first filter element. Essentially pure direct current is required to prevent hum in the output of receivers, speech amplifiers, modulators and transmitters. In the case of transmitters, a pure dc plate supply is also dictated by government regulations. If a constant supply voltage is required under conditions of changing load or ac line voltage, a regulator is used following the filter.

When the prime power source is dc (a battery), the dc is first changed to ac, and is then followed by the transformer-rectifier-filter system. Additional information on this type of supply is contained in Chapter 10.

The cathode-heating power can be ac or dc in the case of indirectly heated cathode tubes, and ac or dc for filament-type tubes if the tubes are operated at a high power level (high-powered audio and rf applications). Low-level operation of filament-type tubes generally requires dc on the filaments if undue hum is to be avoided.

Occasionally transformerless power supplies are used in some applications (notably in the ac-dc type of broadcast receiver). Such supplies operate directly from the power line, and it is necessary to connect the chassis or common-return point of the circuit directly to one side of the ac line. This type of power supply represents an extreme shock hazard when the equipment is interconnected with other apparatus in the amateur station, or when the chassis is exposed. For safety reasons, an isolation transformer should be used with such equipment when it is present in an amateur station.

POWER-LINE CONSIDERATIONS

POWER LINE CONNECTIONS

In most residential systems, three wires are brought in from the outside to the distribution board, while in other systems there are only two wires. In the three-wire system, the third wire is the neutral which is grounded. The voltage between the other two wires normally is 230, while half of this voltage (115) appears between each of these wires and neutral, as indicated in Fig. 5-1A. In systems of this type, usually it will be found that the 115-volt household load is divided as evenly as possible between the two sides of the circuit, half of the load being connected between one wire and the neutral, while the other half of the load is connected between the other wire and neutral. Heavy appliances, such as electric stoves and heaters, normally are designed for 230-volt operation and therefore are connected across the two ungrounded wires. While both ungrounded wires should be fused, a fuse should never be used in the wire to the neutral, nor should a switch be used in this side of the line. The reason for this is that opening the neutral wire does not disconnect the equipment. It simply leaves the equipment on one side of the 230-volt circuit in series with whatever load may be across the other side of the

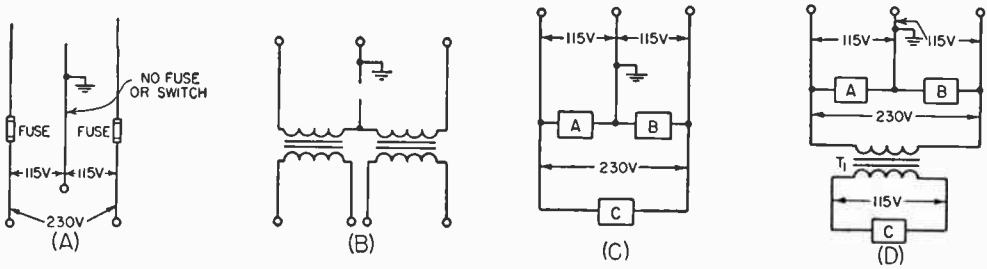

Fig. 5-1 — Three-wire power-line circuits. A — Normal 3-wire-line termination. No fuse should be used in the grounded (neutral) line. B — Showing that a switch in the neutral does not remove voltage from either side of the line. C — Connections for both 115- and 230-volt transformers. D — Operating a 115-volt plate transformer from the 230-volt line to avoid light blinking. T1 is a 2-to-1 step-down transformer.

circuit, as shown in Fig. 5-1B. Furthermore, with the neutral open, the voltage will then be divided between the two sides in inverse proportion to the load resistance, the voltage on one side dropping below normal, while it soars on the other side, unless the loads happen to be equal.

The usual line running to baseboard outlets is rated at 15 amperes. Considering the power consumed by filaments, lamps, transmitter, receiver and other auxiliary equipment, it is not unusual to find this 15-A rating exceeded by the requirements of a station of only moderate power. It must also be kept in mind that the same branch may be in use for other household purposes through another outlet. For this reason, and to minimize light blinking when keying or modulating the transmitter, a separate heavier line should be run from the distribution board to the station whenever possible. (A three-volt drop in line voltage will cause noticeable light blinking.)

If the system is of the three-wire 230-V type, the three wires should be brought into the station so that the load can be distributed to keep the line balanced. The voltage across a fixed load on one side of the circuit will increase as the load current on the other side is increased. The rate of increase will depend upon the resistance introduced by the neutral wire. If the resistance of the neutral is low, the increase will be correspondingly small. When the currents in the two circuits are balanced, no current flows in the neutral wire and the system is operating at maximum efficiency.

Light blinking can be minimized by using transformers with 230-volt primaries in the power supplies for the keyed or intermittent part of the load, connecting them across the two ungrounded wires with no connection to the neutral, as shown in Fig. 5-1C. The same can be accomplished by the insertion of a step-down transformer with its primary operating at 230 volts and secondary delivering 115 volts. Conventional 115-volt transformers may be operated from the secondary of the step-down transformer (see Fig. 5-1D).

When a special heavy-duty line is to be installed, the local power company should be consulted as to local requirements. In some localities it is necessary to have such a job done by a licensed electrician, and there may be special requirements to be met. Some amateurs terminate the special line to the station at a switch box, while others may use electric-stove receptacles as the termination. The power is then distributed around the station by means of conventional outlets at convenient points. All circuits should be properly fused.

Three-Wire 115-V Power Cords

To meet the requirements of state and national codes, electrical tools, appliances and many items of electronic equipment now being manufactured to operate from the 117-volt line must be equipped with a 3-conductor power cord. Two of the conductors carry power to the device in the usual fashion, while the third conductor is connected to the case or frame.

When plugged into a properly wired mating receptacle, the 3-contact polarized plug connects this third conductor to an earth ground, thereby grounding the chassis or frame of the appliance and preventing the possibility of electrical shock to the user. All commercially manufactured items of electronic test equipment and most ac-operated amateur equipments are being supplied with these 3-wire cords. Adapters are available for use where older electrical installations do not have mating receptacles. For proper grounding, the lug of the green wire protruding from the adapter must be attached underneath the screw securing the cover plate of the outlet box where connection is made.

Fusing

All transformer primary circuits should be properly fused. To determine the approximate current rating of the fuse to be used, multiply each current being drawn from the supply in amperes by the voltage at which the current is being drawn. Include the current taken by bleeder resistances and voltage dividers. In the case of series resistors, use the source voltage, not the voltage at the equipment end of the resistor. Include filament power if the transformer is supplying filaments. After multiplying the various voltages and currents, add the individual products. Then divide by the line voltage and add 10 or 20 percent. Use a fuse with the nearest larger current rating.

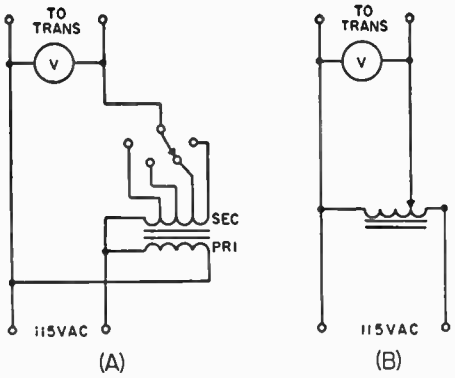

Fig. 5-2 — Two methods of transformer primary control. At A is a tapped toy transformer which may be connected so as to boost or buck the line voltage as required. At B is indicated a variable transformer or autotransformer (Variac) which feeds the transformer primaries.

LINE-VOLTAGE ADJUSTMENT

In certain communities trouble is sometimes experienced from fluctuations in line voltage. Usually these fluctuations are caused by a variation in the load on the line. Since most of the variation comes at certain fixed times of the day or night, such as the times when lights are turned on at evening, they may be taken care of by the use of a manually operated compensating device. A simple arrangement is shown in Fig. 5-2A. A toy transformer is used to boost or buck the line voltage as required. The transformer should have a tapped secondary varying between 6 and 20 volts in steps of 2 or 3 volts and its secondary should be capable of carrying the full load current.

The secondary is connected in series with the line voltage and, if the phasing of the windings is correct, the voltage applied to the primaries of the transmitter transformers can be brought up to the rated 115 volts by setting the toy-transformer tap switch on the right tap. If the phasing of the two windings of the toy transformer happens to be reversed, the voltage will be reduced instead of increased. This connection may be used in cases where the line voltage may be above 115 volts. This method is preferable to using a resistor in the primary of a power transformer since it does not affect the voltage regulation as seriously. The circuit of 5-2B illustrates the use of a variable autotransformer (Variac) for adjusting line voltage.

Constant-Voltage Transformers

Although comparatively expensive, special transformers called constant-voltage transformers are available for use in cases where it is necessary to hold line voltage and/or filament voltage constant with fluctuating supply-line voltage. These are static-magnetic voltage regulating transformers operating on principles of ferroresonance. They have no tubes or moving parts, and require no manual adjustments. These transformers are rated over a range of less than one VA at 5 volts output up to several thousand VA at 115 or 230 volts. On the average they will hold their output voltages within one percent under an input voltage variation of ±15 percent.

SAFETY PRECAUTIONS

All power supplies in an installation should be fed through a single main power-line switch so that all power may be cut off quickly, either before working on the equipment, or in case of an accident. Spring-operated switches or relays are not sufficiently reliable for this important service. Foolproof devices for cutting off all power to the transmitter and other equipment are shown in Fig. 5-3. The arrangements shown in Fig. 5-3A and B are similar circuits for two-wire (115-volt) and three-wire (230-volt) systems. S is an enclosed double-throw switch of the sort usually used as the entrance switch in house installations. J is a standard ac outlet and P a shorted plug to fit the outlet. The switch should be located prominently in plain sight, and members of the household should be instructed in its location and use. I is a red lamp located alongside the switch. Its purpose is not so much to serve as a warning that the power is on as it is to help in identifying and quickly

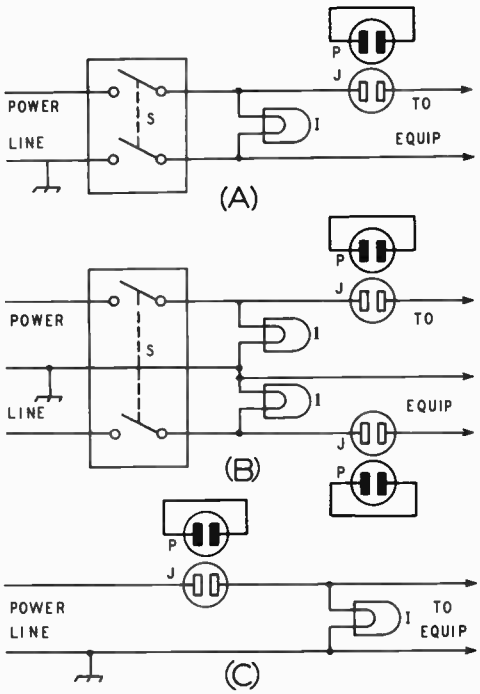

Fig. 5-3 — Reliable arrangements for cutting off all power to the transmitter. S is an enclosed double-pole power switch, J a standard ac outlet, P a shorted plug to fit the outlet and I a red lamp.

A is for a two-wire 115-volt line, B for a three-wire 230-volt system, and C a simplified arrangement for low-power stations.

locating the switch should it become necessary for someone else to cut the power off in an emergency.

The outlet J should be placed in some corner out of sight where it will not be a temptation for children or others to play with. The shorting plug can be removed to open the power circuit if there are others around who might inadvertently throw the switch while the operator is working on the rig. If the operator takes the plug with him, it will prevent someone from turning on the power in his absence and either hurting themselves or the equipment or perhaps starting a fire. Of utmost importance is the fact that the outlet J *must* be placed in the *ungrounded* side of the line.

Those who are operating low power and feel that the expense or complication of the switch isn't warranted can use the shorted-plug idea as the main power switch. In this case, the outlet should be located prominently and identified by a signal light, as shown in Fig. 5-3C.

The test bench should be fed through the main power switch, or a similar arrangement at the bench, if the bench is located remotely from the transmitter.

A bleeder resistor with a power rating which gives a considerable margin of safety should be used across the output of all transmitter power supplies, so that the filter capacitors will be discharged when the high-voltage is turned off.

PLATE AND FILAMENT TRANSFORMERS

Output Voltage

The output voltage which the plate transformer must deliver depends upon the required dc load voltage and the type of filter circuit.

With a choke-input filter (see Fig. 5-4), the required rms secondary voltage (each side of center-tap for a center-tap rectifier) can be calculated by the equation:

$$E_t = 1.1\ [E_o + I\ (R_1 + R_2 + R_s)]$$

where E_o is the required dc output voltage, I is the load current (including bleeder current) in amperes, R1 and R2 are the dc resistances of the chokes, and R_s is the series resistance (transformer and rectifier). E_t is the open-circuit rms voltage.

With a capacitive-input filter system, the approximate transformer output voltage required to give a desired dc output voltage with a given load can be calculated with the aid of Fig. 5-5.

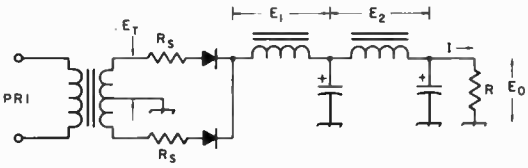

Fig. 5-4 — Diagram showing various voltage drops that must be taken into consideration in determining the required transformer voltage to deliver the desired output voltage.

Example:
Required dc output volts – 500
Load current to be drawn – 100 mA (0.1 ampere)
Input capacitor – 10 μF
Series resistance – 200 ohms

Load resistance = $\frac{500}{0.1}$ = 5000 ohms

R_C = 5000 X 10 = 50,000

R_s/R = 200/5000 = .04

Fig. 5-5 shows that the ratio of dc volts to the required transformer peak voltage is 0.85. The ratio to the rms voltage is 0.85 X 1.414 = 1.2.

The required transformer terminal voltage under load is

$$E_{AC} = \frac{E_{DC} + I \times R_s}{1.2}$$

where I is the load current in amperes.

$$E_{AC} = \frac{500 + 0.1 \times 200}{1.2}$$

$$= \frac{520}{1.2} = 433 \text{ volts}$$

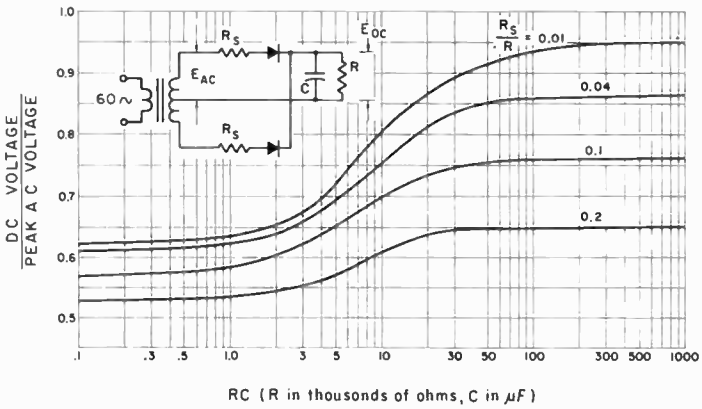

Fig. 5-5 — Dc output voltages from a full-wave rectifier circuit as a function of the filter capacitance and load resistance. R_s includes transformer winding resistance and rectifier forward resistance. For the ratio R_s/R, both resistances are in ohms; for the RC product, R is in thousands of ohms.

The required transformer is one having an 866-V center-tapped secondary. An 850- or 900-V secondary would be entirely satisfactory. Should the filter section contain one or more filter chokes connected between the input capacitor and the load, the dc-resistance values of the chokes are added to the value of R_s in the equation before multiplying by the load-current value.

Volt-Ampere Rating

The number of volt-amperes delivered by a transformer depends upon the type of filter (capacitor or choke input) used, and upon the type of rectifier used (full-wave center tap, or full-wave bridge). With a capacitive-input filter the heating effect in the secondary is higher because of the high ratio of peak-to-average current. The volt-amperes handled by the transformer may be several times the watts delivered to the load. With a choke-input filter, provided the input choke has at least the critical inductance, the secondary volt-amperes can be calculated quite closely by the equation:

(Full-wave ct) $Sec.\ VA = \frac{.707\ EI}{1000}$

(Full-wave bridge) $Sec.\ VA$

where E is the *total* rms voltage of the secondary (between the outside ends in the case of a center-tapped winding) and I is the dc output current in milliamperes (load current plus bleeder current). The primary volt-amperes will be somewhat higher because of transformer losses.

BROADCAST & TELEVISION REPLACEMENT TRANSFORMERS

Small power transformers of the type sold for replacement in broadcast and television receivers are usually designed for service in terms of use for several hours continuously with capacitor-input filters. In the usual type of amateur transmitter service, where most of the power is drawn intermittently for periods of several minutes with equivalent intervals in between, the published ratings can be exceeded without excessive transformer heating.

With a capacitor-input filter, it should be safe to draw 20 to 30 percent more current than the rated value. With a choke-input filter, an increase in current of about 50 percent is permissible. If a bridge rectifier is used, the output voltage will be approximately doubled. In this case, it should be possible in amateur transmitter service to draw the rated current, thus obtaining about twice the rated output power from the transformer.

This does not apply, of course, to amateur transmitter plate transformers, which usually are already rated for intermittent service.

REWINDING POWER TRANSFORMERS

Although the home winding of power transformers is a task that few amateurs undertake, the rewinding of a transformer secondary to give some desired voltage for powering filaments or a solid-state device is not difficult. It involves a matter of only a small number of turns and the wire is large enough to be handled easily. Often a receiver power transformer with a burned-out high-voltage winding or the power transformer from a discarded TV set can be converted into an entirely satisfactory transformer without great effort and with little expense. The average TV power transformer for a 17-inch or larger set is capable of delivering from 350 to 450 watts, continuous duty. If an amateur transmitter is being powered, the service is not continuous, so the ratings can be increased by a factor of 40 or 50 percent without danger of overloading the transformer.

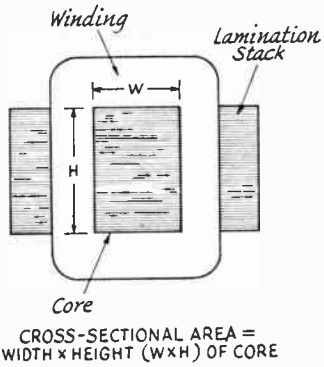

Fig. 5-6 — Cross-sectional drawing of a typical power transformer. Multiplying the height (or thickness of the laminations) times the width of the central core area in inches gives the value to be applied to Fig. 5-7.

The primary volt-ampere rating of the transformer to be rewound, if known, can be used to determine its power-handling capability. The secondary volt-ampere rating will be ten to twenty percent less than the primary rating. The power rating may also be determined approximately from the cross-sectional area of the core which is *inside* the windings. Fig. 5-6 shows the method of determining the area, and Fig. 5-7 may be used to convert this information into a power rating.

Before disconnecting the winding leads from their terminals, each should be marked for identification. In removing the core laminations, care should be taken to note the manner in which the core is assembled, so that the reassembling will be done in the same manner. Most transformers have secondaries wound over the primary, while in some the order is reversed. In case the secondaries are on the inside, the turns can be pulled out from the center after slitting and removing the fiber core.

The turns removed from one of the original filament windings of known voltage should be carefully counted as the winding is removed. This will give the number of turns per volt and the same figure should be used in determining the number of turns for the new secondary. For instance, if the

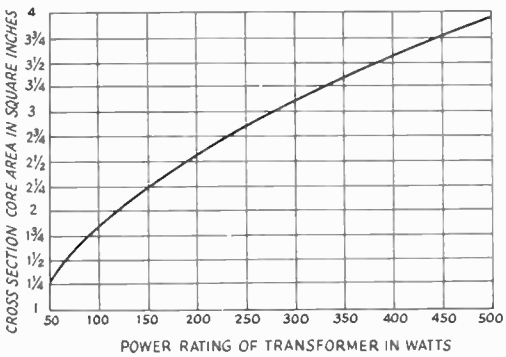

Fig. 5-7 — Power-handling capability of a transformer versus cross-sectional area of core.

old filament winding was rated at 5 volts and had 15 turns, this is 15/5 = 3 turns per volt. If the new secondary is to deliver 18 volts, the required number of turns on the new winding will be 18 X 3 = 54 turns.

In winding a transformer, the size of wire is an important factor in the heat developed in operation. A cross-sectional area of 1000 circular mils per ampere is conservative. A value commonly used in amateur-service transformers is 700 cmil/A. The larger the cmil/A figure, the cooler the transformer will run. The current rating in amperes of various wire sizes is shown in the copper-wire table in another chapter. If the transformer being rewound is a filament transformer, it may be necessary to choose the wire size carefully to fit the small available space. On the other hand, if the transformer is a power unit with the high-voltage winding removed, there should be plenty of room for a size of wire that will conservatively handle the required current.

After the first layer of turns is put on during rewinding, secure the ends with cellulose tape. Each layer should be insulated from the next; ordinary household waxed paper can be used for the purpose, a single layer being adequate. Sheets cut to size beforehand may be secured over each layer with tape. Be sure to bring all leads out the same side of the core so the covers will go in place when the unit is completed. When the last layer of the winding is put on, use two sheets of waxed paper, and then cover those with vinyl electrical tape, keeping the tape as taut as possible. This will add mechanical strength to the assembly.

The laminations and housing are assembled in just the opposite sequence to that followed in disassembly. Use a light coating of shellac between each lamination. During reassembly, the lamination stack may be compressed by clamping in a vise. If the last few lamination strips cannot be replaced, it is better to omit them than to force the unit together.

RECTIFIER CIRCUITS

Half-Wave Rectifier

Fig. 5-8 shows three rectifier circuits covering most of the common applications in amateur equipment. Fig. 5-8A is the circuit of a half-wave rectifier. The rectifier is a device that will conduct current in one direction but not in the other. During one half of the ac cycle the rectifier will conduct and current will flow through the rectifier to the load. During the other half of the cycle the rectifier does not conduct and no current flows to the load. The shape of the output wave is shown in (A) at the right. It shows that the current always flows in the same direction but that the flow of current is not continuous and is pulsating in amplitude.

The average output voltage – the voltage read by the usual dc voltmeter – with this circuit (no filter connected) is 0.45 times the rms value of the ac voltage delivered by the transformer secondary. Because the frequency of the pulses is relatively low (one pulsation per cycle), considerable filtering is required to provide adequately smooth dc output, and for this reason this circuit is usually limited to applications where the current involved is small, such as supplies for cathode-ray tubes and for protective bias in a transmitter.

The peak reverse voltage (PRV), the voltage the rectifier must withstand when it isn't conducting, varies with the load. With a resistive load it is the peak ac voltage (1.4 E_{RMS}) but with a capacitor load drawing little or no current it can rise to 2.8 E_{RMS}.

Another disadvantage of the half-wave rectifier circuit is that the transformer must have a considerably higher primary volt-ampere rating (approximately 40 percent greater), for the same dc power output, than in other rectifier circuits.

Full-Wave Center-Tap Rectifier

A commonly used rectifier circuit is shown in Fig. 5-8B. Essentially an arrangement in which the outputs of two half-wave rectifiers are combined, it makes use of both halves of the ac cycle. A transformer with a center-tapped secondary is required with the circuit.

The average output voltage is 0.9 times the rms voltage of half the transformer secondary; this is the maximum voltage that can be obtained with a suitable choke-input filter. The peak output voltage is 1.4 times the rms voltage of half the transformer secondary; this is the maximum voltage that can be obtained from a capacitor-input filter (at little or no load).

The peak reverse voltage across a rectifier unit is 2.8 times the rms voltage of half the transformer secondary.

As can be seen from the sketches of the output wave form in (B) to the right, the frequency of the output pulses is twice that of the half-wave rectifier. Therefore much less filtering is required.

Since the rectifiers work alternately, each handles half of the load current, and the load-current rating of each rectifier need be only half the total load current drawn from the supply.

Two separate transformers, with their primaries connected in parallel and secondaries connected in series (with the proper polarity) may be used in this circuit. However, if this substitution is made, the primary volt-ampere rating must be reduced to about 40 percent less than twice the rating of one transformer.

Full-Wave Bridge Rectifier

Another full-wave rectifier circuit is shown in Fig. 5-8C. In this arrangement, two rectifiers operate in series on each half of the cycle, one rectifier being in the lead to the load, the other being in the return lead. The current flows through two rectifiers during one half of the cycle and through the other two rectifiers during the other half of the cycle. The output wave shape (C), to the right, is the same as that from the simple center-tap rectifier circuit. The maximum output voltage into a resistive load or a properly-designed choke-input filter is 0.9 times the rms voltage delivered by the transformer secondary; with a capacitor-input filter and a very light load the output voltage is 1.4 times the secondary rms voltage. The peak reverse voltage per rectifier is 1.4 times the secondary rms voltage. Each rectifier in a bridge circuit should have a minimum load-current rating of one-half the total load current to be drawn from the supply.

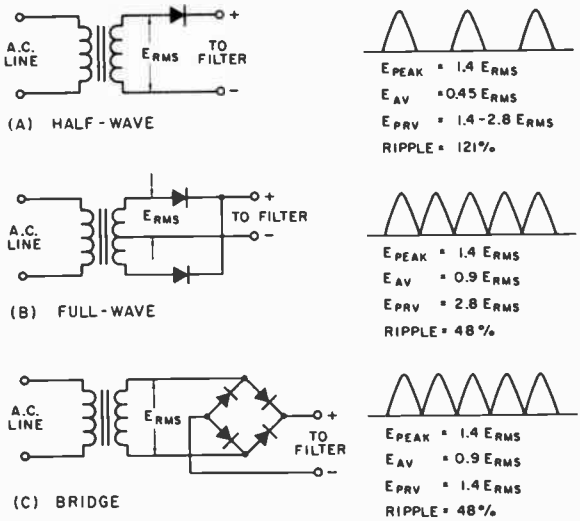

Fig. 5-8 — Fundamental rectifier circuits. A — Half-wave (E_{PRV} = 1.4 E_{RMS} with resistive load, = 2.8 E_{RMS} with capacitor-input filter). B — Full-wave. C — Full-wave bridge. Output voltage values do not include rectifier voltage drops.

RECTIFIER RATINGS

All rectifiers are subject to limitations as to breakdown voltage and current-handling capability. Some tube types are rated in terms of the maximum rms voltage that should be applied to the rectifier plate. This is sometimes dependent on whether a choke- or capacitive-input filter is used. Others, particularly mercury-vapor and semiconductor types, are rated according to maximum peak reverse voltage.

Rectifiers are rated also as to maximum dc load current, and some may carry peak-current ratings in addition. To assure normal life, all ratings should be carefully observed.

HIGH-VACUUM RECTIFIERS

High-vacuum rectifiers depend entirely upon the thermionic emission from a heated filament and are characterized by a relatively high internal resistance. For this reason, their application usually is limited to low power, although there are a few types designed for medium and high power in cases where the relatively high internal voltage drop may be tolerated. This high internal resistance makes them less susceptible to damage from temporary overload and they are free from the bothersome electrical noise sometimes associated with other types of rectifiers.

Some rectifiers of the high-vacuum full-wave type in the so-called receiver-tube class will handle up to 275 mA at 400- to 500-volts dc output. Those in the higher-power class can be used to handle up to 500 mA at 2000 volts dc in full-wave circuits. Most low-power high-vacuum rectifiers are produced in the full-wave type, while those for greater power are invariably of the half-wave type, two tubes being required for a full-wave rectifier circuit. A few of the lower voltage types have indirectly heated cathodes, but are limited in heater-to-cathode voltage rating.

SEMICONDUCTOR RECTIFIERS

Silicon rectifiers are being used almost exclusively in power supplies for amateur equipment, and they will eventually supplant high-vacuum and mercury-vapor rectifiers. The semiconductors have the advantages of compactness, low internal voltage drop, low operating temperature and high current-handling capability. Also, no filament transformers are required.

Silicon rectifiers are available in a wide range of voltage and current ratings. In peak reverse voltage ratings of 600 or less, silicon rectifiers carry current ratings as high as 400 amperes, and at 1000 PRV the current ratings may be 1.5 amperes or so. The extreme compactness of silicon types makes feasible the stacking of several units in series for higher voltages. Standard stacks are available that

will handle up to 10,000 PRV at a dc load current of 500 mA, although the amateur can do much better, economically, by stacking the rectifiers himself.

PROTECTION OF SILICON POWER DIODES

The important specifications of a silicon diode are:

1) PRV (or PIV), the peak reverse (or peak inverse) voltage,

2) I_o, the average dc current rating.

3) I_{REP}, the peak repetitive forward current, and

4) I_{SURGE}, the peak one-cycle surge current. The first two specifications appear in most catalogs. The last two often do not, but they are very important.

Since the rectifier never allows current to flow more than half the time, when it does conduct it has to pass at least twice the average direct current. With a capacitor-input filter, the rectifier conducts much less than half the time, so that when it does conduct, it may pass as much as ten to twenty times the average dc current, under certain conditions. This peak current is I_{REP}, the peak repetitive forward current.

Also, when the supply is first turned on, the discharged input capacitor looks like a dead short, and the rectifier passes a very heavy current. This is I_{SURGE}. The maximum I_{SURGE} rating is usually for a duration of one cycle (at 60 Hz), or about 16.7 milliseconds.

If a manufacturer's data sheet is not available, an educated guess about a diode's capability can be made by using these rules of thumb for silicon diodes of the type commonly used in amateur power supplies:

Rule 1) The maximum I_{REP} rating can be assumed to be approximately four times the maximum I_o rating.

Rule 2) The maximum I_{SURGE} rating can be assumed to be approximately twelve times the maximum I_o rating. (This should provide a reasonable safety factor. Silicon rectifiers with 750-mA dc ratings, as an example, seldom have 1-cycle surge ratings of less than 15 amperes; some are rated up to 35 amperes or more.) From this then, it can be seen that the rectifier should be selected on the basis of I_{SURGE} and not on I_o ratings.

Thermal Protection

The junction of a diode is quite small, hence it must operate at a high current density. The heat-handling capability is, therefore, quite small. Normally, this is not a prime consideration in high-voltage, low-current supplies. When using high-current rectifiers at or near their maximum ratings (usually 2-ampere or larger stud-mount rectifiers), some form of heat sinking is necessary. Frequently, mounting the rectifier on the main chassis – directly, or by means of thin mica insulating washers – will suffice. If insulated from the chassis, a thin layer of silicone grease should be used between the diode and the insulator, and between the insulator and the chassis to assure good heat conduction. Large high-current rectifiers often require special heat sinks to maintain a safe operating temperature. Forced-air cooling is sometimes used as a further aid. Safe case temperatures are usually given in the manufacturer's data sheets and should be observed if the maximum capabilities of the diode are to be realized.

Surge Protection

Each time the power supply is activated, assuming the input filter capacitor has been discharged, the rectifiers must look into what represents a dead short. Some form of surge protection is usually necessary to protect the diodes until the input capacitor becomes nearly charged. Although the dc resistance of the transformer secondary can be relied upon in some instances to provide ample surge-current limiting, it is seldom enough on high-voltage power supplies to be suitable. Series resistors can be installed between the secondary and the rectifier strings as illustrated in Fig. 5-4, but are a deterrent to good

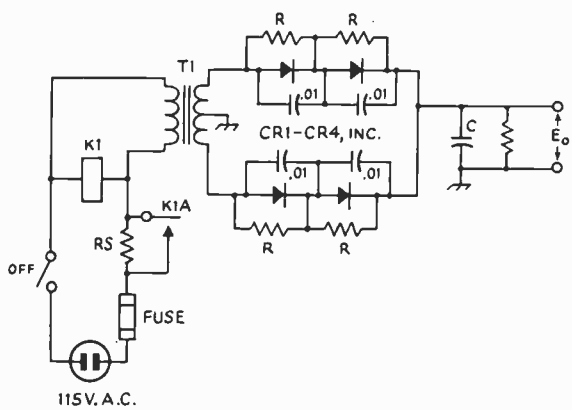

Fig. 5-9 – The primary circuit of T1 shows how a 115-volt ac relay and a series dropping resistor, R_s, can provide surge protection while C charges. When silicon rectifiers are connected in series for high-voltage operation, the inverse voltage does not divide equally. The reverse voltage drops can be equalized by using equalizing resistors, as shown in the secondary circuit. To protect against voltage "spikes" that may damage an individual rectifier, each rectifier should be bypassed by a .01-μF capacitor. Connected as shown, two 400-PRV silicon rectifiers can be used as an 800-PRV rectifier, although it is preferable to include a safety factor and call it a "750-PRV" rectifier. The rectifiers, CR1 through CR4, should be the same type (same type number and ratings).

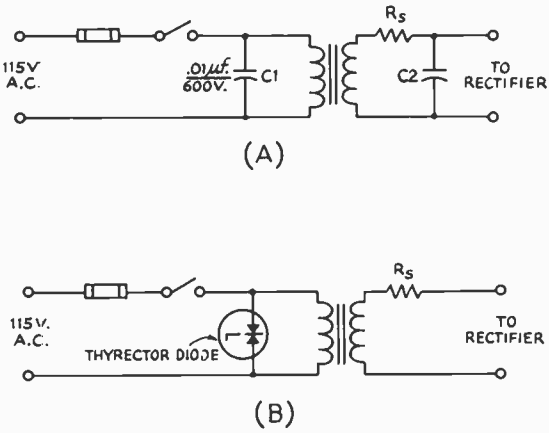

Fig. 5-10 — Methods of suppressing line transients. See text.

voltage regulation. By installing a surge-limiting device in the primary circuit of the plate transformer, the need for series resistors in the secondary circuit can be avoided. A practical method for primary-circuit surge control is shown in Fig. 5-9. The resistor, R_S introduces a voltage drop in the primary feed to T1 until C is nearly charged. Then, after C becomes partially charged, the voltage drop across R_S lessens and allows K1 to pull in, thus applying full primary power to T1 as K1A shorts out R_S. R_S is usually a 25-watt resistor whose resistance is somewhere between 15 and 50 ohms, depending upon the power supply characteristics.

Transient Problems

A common cause of trouble is transient voltages on the ac power line. These are short spikes, mostly, that can temporarily increase the voltage seen by the rectifier to values much higher than the normal transformer voltage. They come from distant lightning strokes, electric motors turning on and off, and so on. Transients cause unexpected, and often unexplained, loss of silicon rectifiers.

It's always wise to suppress line transients, and it can be easily done. Fig. 5-10A shows one way. C1 looks like 280,000 ohms at 60 Hz, but to a sharp transient (which has only high-frequency components), it is an effective bypass. C2 provides additional protection on the secondary side of the transformer. It should be .01μF for transformer voltages of 100 or less, and .001μF for high-voltage transformers.

Fig. 5-10B shows another transient-suppression method using selenium suppressor diodes. The diodes do not conduct unless the peak voltage becomes abnormally high. Then they clip the transient peaks. General Electric sells protective diodes under the trade name, "Thyrector." Sarkes-Tarzian uses the descriptive name, "Klipvolt."

Transient voltages can go as high as twice the normal line voltage before the suppressor diodes clip the peaks. Capacitors cannot give perfect suppression either. Thus, it is a good idea to use power-supply rectifiers rated at about twice the expected PRV.

Diodes in Series

Where the PRV rating of a single diode is not sufficient for the application, similar diodes may be used in series. (Two 500-PRV diodes in series will withstand 1000 PRV, and so on.) When this is done, a resistor and a capacitor should be placed across each diode in the string to equalize the PRV drops and to guard against transient voltage spikes, as shown in Fig. 5-9. Even though the diodes are of the same type and have the same PRV rating, they may have widely different back resistances when they are cut off. The reverse voltage divides according to Ohm's Law, and the diode with the higher back resistance will have the higher voltage developed across it. The diode may break down.

If we put a swamping resistor across each diode, R as shown in Fig. 5-9, the resultant resistance across each diode will be almost the same, and the back voltage will divide almost equally. A good rule of thumb for resistor size is this: Multiply the PRV rating of the diode by 500 ohms. For example, a 500-PRV diode should be shunted by 500 X 500, or 250,000 ohms.

The shift from forward conduction to high back resistance does not take place instantly in a silicon diode. Some diodes take longer than others to develop high back resistance. To protect the "fast" diodes in a series string until all the diodes are properly cut off, a .01-μF capacitor should be placed across each diode. Fig. 5-9 shows the complete series-diode circuit. The capacitors should be noninductive, ceramic disk, for example, and should be well matched. Use 10-percent-tolerance capacitors if possible.

Diodes in Parallel

Diodes can be placed in parallel to increase current-handling capability. Equalizing resistors should be added as shown in Fig. 5-11. Without the resistors, one diode may take most of the current. The resistors should be selected to have about a 1-volt drop at the expected peak current.

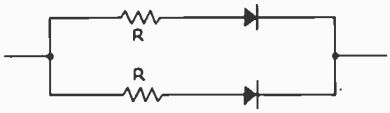

Fig. 5-11 — Diodes in parallel should have equalizing resistors. See text for appropriate value.

FILTERING

The pulsating dc waves from the rectifiers are not sufficiently constant in amplitude to prevent hum corresponding to the pulsations. Filters are required between the rectifier and the load to smooth out the pulsations into an essentially constant dc voltage. Also, upon the design of the filter depends to a large extent the dc voltage output, the voltage regulation of the power supply, and the maximum load current that can be drawn from the supply without exceeding the peak-current rating of the rectifier. Power supply filters are low-pass devices using series inductors and shunt capacitors.

Load Resistance

In discussing the performance of power-supply filters, it is sometimes convenient to express the load connected to the output terminals of the supply in terms of resistance. The load resistance is equal to the output voltage divided by the total current drawn, including the current drawn by the bleeder resistor.

Voltage Regulation

The output voltage of a power supply always decreases as more current is drawn, not only because of increased voltage drops on the transformer, filter chokes and the rectifier (if high-vacuum rectifiers are used) but also because the output voltage at light loads tends to soar to the peak value of the transformer voltage as a result of charging the first capacitor. By proper filter design the latter effect can be eliminated. The change in output voltage with load is called *voltage regulation* and is expressed as a percentage.

$$\textit{Percent regulation} = \frac{100\,(E1 - E2)}{E2}$$

Example: No-load voltage = E1 = 1550 volts.
Full-load voltage = E2 = 1230 volts.

$$\text{Percentage regulation} = \frac{100\,(1550 - 1230)}{1230}$$

$$= \frac{32{,}000}{1230} = 26 \text{ percent}$$

A steady load, such as that represented by a receiver, speech amplifier or unkeyed stages of a transmitter, does not require good (low) regulation as long as the proper voltage is obtained under load conditions. However, the filter capacitors must have a voltage rating safe for the highest value to which the voltage will soar when the external load is removed.

A power supply will show more (higher) regulation with long-term changes in load resistance than with short temporary changes. The regulation with long-term changes is often called the static regulation, to distinguish it from the dynamic regulation (short temporary load changes). A load that varies at a syllabic or keyed rated, as represented by some audio and rf amplifiers, usually requires good dynamic regulation (15 percent or less) if distortion products are to be held to a low level. The dynamic regulation of a power supply is improved by increasing the value of the output capacitor.

When essentially constant voltage regardless of current variation is required (for stabilizing an oscillator, for example), special voltage-regulating circuits described elsewhere in this chapter are used.

Bleeder

A bleeder resistor is a resistance connected across the output terminals of the power supply. Its functions are to discharge the filter capacitors as a safety measure when the power is turned off and to improve voltage regulation by providing a minimum load resistance. When voltage regulation is not of importance, the resistance may be as high as 100 ohms per volt. The resistance value to be used for voltage-regulating purposes is discussed in later sections. From the consideration of safety, the power rating of the resistor should be as conservative as possible, since a burned-out bleeder resistor is more dangerous than none at all!

Ripple Frequency and Voltage

The pulsations in the output of the rectifier can be considered to be the resultant of an alternating current superimposed upon a steady direct current. From this viewpoint, the filter may be considered to consist of shunting capacitors which short-circuit the ac component while not interfering with the flow of the dc component, and series chokes which pass dc readily but which impede the flow of the ac component.

The alternating component is called the ripple. The effectiveness of the filter can be expressed in terms of percent ripple, which is the ratio of the rms value of the ripple to the dc value in terms of percentage. Any multiplier or amplifier supply in a code transmitter should have less than 5 percent ripple. A linear amplifier can tolerate about 3 percent ripple on the plate voltage. Bias supplies for linear amplifiers, and modulator and modulated-amplifier plate supplies, should have less than 1 percent ripple. VFOs, speech amplifiers and receivers may require a ripple reduction to .01 percent.

Ripple frequency is the frequency of the pulsations in the rectifier output wave – the number of pulsations per second. The frequency of the ripple with half-wave rectifiers is the same as the frequency of the line supply – 60 Hz with 60-Hz supply. Since the output pulses are doubled with a full-wave rectifier, the ripple frequency is doubled – to 120 Hz with a 60-Hz supply.

The amount of filtering (values of inductance and capacitance) required to give adequate smoothing depends upon the ripple frequency, with more filtering being required as the ripple frequency is lowered.

Type of Filter

Power-supply filters fall into two classifications, capacitor input and choke input. Capacitor-input filters are characterized by relatively high output voltage in respect to the transformer voltage. Advantage of this can be taken when silicon rectifiers are used or with any rectifier when the load resistance is high. Silicon rectifiers have a higher allowable peak-to-dc ratio than do thermionic rectifiers. This permits the use of capacitor-input filters at ratios of input capacitor to load resistance that would seriously shorten the life of a thermionic rectifier system. When the series resistance through a rectifier and filter system is appreciable, as when high-vacuum rectifiers are used, the voltage regulation of a capacitor-input power supply is poor.

The output voltage of a properly designed choke-input power supply is less than would be obtained with a capacitor-input filter from the same transformer.

CAPACITIVE-INPUT FILTERS

Capacitive-input filter systems are shown in Fig. 5-12. Disregarding voltage drops in the chokes, all have the same characteristics except in respect to ripple. Better ripple reduction will be obtained when LC sections are added, as shown in Figs. 5-12B and C.

Output Voltage

To determine the approximate dc voltage output when a capacitive-input filter is used, reference should be made to the graph of Fig. 5-5.

Example:
Transformer rms voltage = 350
Peak ac voltage = 1.4 X 350 = 495
Load resistance = 2000 ohms

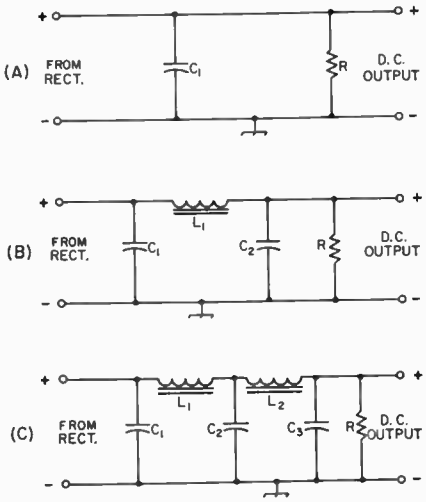

Fig. 5-12 — Capacitive-input filter circuits. A — Simple capacitive. B — Single-section. C — Double-section.

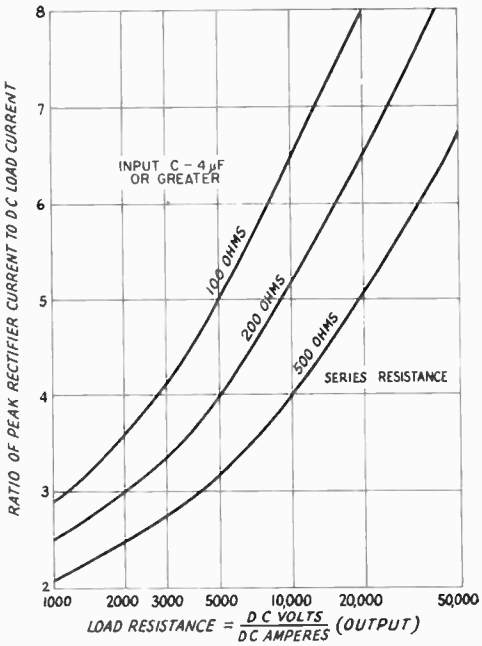

Fig. 5-13 — Graph showing the relationship between the dc load current and the rectifier peak current with capacitive input for various values of load and input resistance.

Series resistance = 200 ohms
200 ÷ 2000 = 0.1
Input capacitor C = 20 μF
R (thousands) X C = 2 X 20 = 40
From curve 0.1 and RC = 40, dc voltage = 495 X 0.75 = 370.

Regulation

If a bleeder resistance of 20,000 ohms is used in the example above, when the load is removed and R becomes 20,000, the dc voltage will rise to 470. For minimum regulation with a capacitor-input filter, the bleeder resistance should be as high as possible, or the series resistance should be low and the filter capacitance high, without exceeding the transformer or rectifier ratings.

Maximum Rectifier Current

The maximum current that can be drawn from a supply with a capacitive-input filter without exceeding the peak-current rating of the rectifier may be estimated from the graph of Fig. 5-13. Using values from the preceding example, the ratio of peak rectifier current to dc load current for 2000 ohms, as shown in Fig. 5-13, is 3. Therefore, the maximum load current that can be drawn without exceeding the rectifier rating is 1/3 the peak rating of the rectifier. For a load current of 185 mA, as above (370 V ÷ 2000 Ω), the rectifier peak current rating should be at least 3 X 185 = 555 mA.

With bleeder current only, Fig. 5-13 shows that the ratio will increase to 6.5. But since the bleeder draws 23.5 mA dc, the rectifier peak current will be only 153 mA.

CHOKE-INPUT FILTERS

With thermionic rectifiers better voltage regulations results when a choke-input filter, as shown in Fig. 5-4, is used. Choke input permits better utilization of the thermionic rectifier, since a higher load current usually can be drawn without exceeding the peak current rating of the rectifier.

Minimum Choke Inductance

A choke-input filter will tend to act as a capacitive-input filter unless the input choke has at least a certain minimum value of inductance called the critical value. This critical value is given by

$$L_{crit}\ (\text{henrys}) = \frac{E\ (\text{volts})}{I\ (\text{mA})}$$

where E is the output voltage of the supply, and I is the current being drawn through the filter.

If the choke has at least the critical value, the output voltage will be limited to the average value of the rectified wave at the input to the choke (see Fig. 5-8) when the current drawn from the supply is small. This is in contrast to the capacitive-input filter in which the output voltage tends to soar toward the peak value of the rectified wave at light loads.

Minimum-Load – Bleeder Resistance

From the formula above for critical inductance, it is obvious that if no current is drawn from the supply, the critical inductance will be infinite. So that a practical value of inductance may be used, some current must be drawn from the supply at all times the supply is in use. From the formula we find that this minimum value of current is

$$I\ (\text{mA}) = \frac{E\ (\text{volts})}{L_{crit}}$$

In the majority of cases it will be most convenient to adjust the bleeder resistance so that the bleeder will draw the required minimum current. From the formula, it may be seen that the value of critical inductance becomes smaller as the load current increases.

Swinging Chokes

Less costly chokes are available that will maintain at least the critical value of inductance over the range of current likely to be drawn from practical supplies. These chokes are called swinging chokes. As an example, a swinging choke may have an inductance rating of 5/25 H and a current rating of 200 mA. If the supply delivers 1000 volts, the minimum load current should be 1000/25 = 40 mA. When the full load current of 200 mA is drawn from the supply, the inductance will drop to 5 H. The critical inductance for 200 mA at 1000 volts is 1000/200 = 5 H. Therefore the 5/25 H choke maintains the critical inductance at the full current rating of 200 mA. At all load currents between 40 mA and 200 mA, the choke will adjust its inductance to the approximate critical value.

Output Voltage

Provided the input-choke inductance is at least the critical value, the output voltage may be calculated quite close by the following equation:

$$E_o = 0.9E_t - (I_B + I_L)\,(R1 + R2) - E_r$$

where E_o is the output voltage; E_t is the rms voltage applied to the rectifier (rms voltage between center-tap and one end of the secondary in the case of the center-tap rectifier); I_B and I_L are the bleeder and load currents, respectively, in amperes; R_1 and R_2 are the resistances of the first and second filter chokes; and E_r is the voltage drop across the rectifier. The various voltage drops are shown in Fig. 5-4. At no load I_L is zero; hence the no-load voltage may be calculated on the basis of bleeder current only. The voltage regulation may be determined from the no-load and full-load voltages using the formula previously given.

OUTPUT CAPACITOR

Whether the supply has a choke- or capacitor-input filter, if it is intended for use with a Class A af amplifier, the reactance of the output capacitor should be low for the lowest audio frequency; 16 μF or more is usually adequate. When the supply is used with a Class B amplifier (for modulation or for ssb amplification) or a cw transmitter, increasing the output capacitance will result in improved dynamic regulation of the supply. However, a region of diminishing returns can be reached, and 20 to 30 μF will usually suffice for any supply subjected to large changes at a syllabic (or keying) rate.

RESONANCE

Resonance effects in the series circuit across the output of the rectifier, formed by the first choke and first filter capacitor, must be avoided, since the ripple voltage would build up to large values. This not only is the opposite action to that for which the filter is intended, but may also cause excessive rectifier peak currents and abnormally high peak-reverse voltages. For full-wave rectification the ripple frequency will be 120 Hz for a 60-Hz supply, and resonance will occur when the product of choke inductance in henrys times capacitor capacitance in microfarads is equal to 1.77. At least twice this product of inductance and capacitance should be used to ensure against resonance effects. With a swinging choke, the minimum rated inductance of the choke should be used.

RATINGS OF FILTER COMPONENTS

In a power supply using a choke-input filter and properly designed choke and bleeder resistor, the no-load voltage across the filter capacitors will be about nine-tenths of the ac rms voltage. Neverthe-

less, it is advisable to use capacitors rated for the *peak* transformer voltage. This large safety factor is suggested because the voltage across the capacitors can reach this peak value if the bleeder should burn out and there is no load on the supply.

In a capacitive-input filter, the capacitors should have a working-voltage rating at least as high, and preferably somewhat higher, than the peak voltage from the transformer. Thus, in the case of a center-tap rectifier having a transformer delivering 550 volts each side of the center tap, the minimum safe capacitor voltage rating will be 550 X 1.41 or 775 volts. An 800-volt capacitor should be used, or preferably a 1000-volt unit.

Filter Capacitors in Series

Filter capacitors are made in several different types. Electrolytic capacitors, which are available for peak voltages up to about 800, combine high capacitance with small size, since the dielectric is an extremely thin film of oxide on aluminum foil. Capacitors of this type may be connected in series for higher voltages, although the filtering capacitance will be reduced to the resultant of the two capacitances in series. If this arrangement is used, it is important that *each* of the capacitors be shunted with a resistor of about 100 ohms per volt of supply voltage applied to the individual capacitors, with an adequate power rating. These resistors may serve as all or part of the bleeder resistance. Capacitors with higher voltage ratings usually are made with a dielectric of thin paper impregnated with oil. The working voltage of a capacitor is the voltage that it will withstand continuously.

Filter Chokes

Filter chokes or inductances are wound on iron cores, with a small gap in the core to prevent magnetic saturation of the iron at high currents. When the iron becomes saturated its permeability decreases, and consequently the inductance also decreases. Despite the air gap, the inductance of a choke usually varies to some extent with the direct current flowing in the winding; hence it is necessary to specify the inductance at the current which the choke is intended to carry. Its inductance with little or no direct current flowing in the winding will usually be considerably higher than the value when full load current is flowing.

NEGATIVE-LEAD FILTERING

For many years it has been almost universal practice to place filter chokes in the positive leads of plate power supplies. This means that the insulation between the choke winding and its core (which should be grounded to chassis as a safety measure) must be adequate to withstand the output voltage of the supply. This voltage requirement is removed if the chokes are placed in the negative lead as shown in Fig. 5-14. With this connection, the capacitance of the transformer secondary to ground appears in parallel with the filter chokes tending to bypass the chokes. However, this effect will be negligible in practical application except in cases where the output ripple must be reduced to a very low figure. Such applications are usually limited to low-voltage devices such as receivers, speech amplifiers and VFOs where insulation is no problem and the chokes may be placed in the positive side in the conventional manner. In higher voltage applications, there is no reason why the filter chokes should not be placed in the negative lead to reduce insulation requirements. Choke terminals, negative capacitor terminals and the transformer center-tap terminal should be well protected against accidental contact, since these will assume full supply voltage to chassis should a choke burn out or the chassis connection fail.

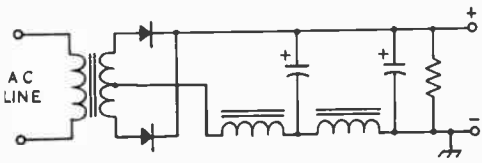

Fig. 5-14 — In most applications, the filter chokes may be placed in the negative instead of the positive side of the circuit. This reduces the danger of a voltage breakdown between the choke winding and core.

THE "ECONOMY" POWER SUPPLY

In many transmitters of the 100-watt class, an excellent method for obtaining plate and screen voltages without wasting power in resistors is by the use of the "economy" power-supply circuit. Shown in Fig. 5-15, it is a combination of the full-wave and bridge-rectifier circuits. The voltage at E1 is the normal voltage obtained with the full-wave circuit, and the voltage at E2 is that obtained with the bridge circuit (see Fig. 5-8). The *total* dc power obtained from the transformer is, of course, the same as when the transformer is used in its normal manner. In cw and ssb applications, additional power can usually be drawn without excessive heating, especially if the transformer has a rectifier filament winding that isn't being used.

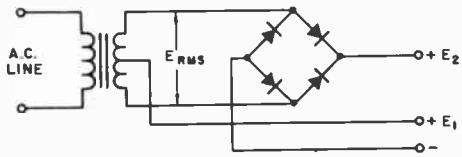

Fig. 5-15 — The "economy" power supply circuit is a combination of the full-wave and bridge-rectifier circuits.

VOLTAGE-MULTIPLYING CIRCUITS

Although vacuum-tube rectifiers can be used in voltage-multiplying circuits, semiconductor rectifiers are recommended.

A simple half-wave rectifier circuit is shown in Fig. 5-16. Strictly speaking this is not a voltage-multiplying circuit. However, if the current demand is low (a milliampere or less), the dc output voltage will be close to the peak voltage of the source, or $1.4E_{rms}$. A typical application of the circuit would be to obtain a low bias voltage from a heater winding; the + side of the output can be grounded by reversing the polarity of the rectifier and capacitor. As with all half-wave rectifiers, the output voltage drops quickly with increased current demand.

The resistor R1 in Fig. 5-16 is included to limit the current through the rectifier, in accordance with the manufacturer's rating for the diode. If the resistance of the transformer winding is sufficient, R1 can be omitted.

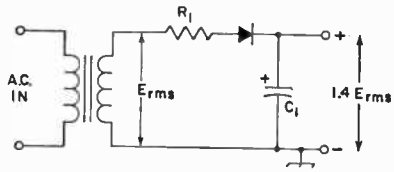

Fig. 5-16 — If the current demand is low, a simple half-wave rectifier will deliver a voltage increase. Typical values, for E_{RMS} = 117 and a load current of 1 mA:
C1 — 50-μF, 250-V electrolytic.
E_{output} — 160 volts.
R1 — 22 ohms.

VOLTAGE DOUBLERS

Several types of voltage-doubling circuits are in common use. Where it is not necessary that one side of the transformer secondary be at ground potential, the voltage-doubling circuit of Fig. 5-17 is used. This circuit has several advantages over the voltage-doubling circuit to be described later. For a given output voltage, compared to the full-wave rectifier circuit (Fig. 5-8B), this full-wave doubler circuit requires rectifiers having only half the PRV rating. Again for a given output voltage, compared to a full-wave bridge circuit (Fig. 5-8C) only half as many rectifiers (of the same PRV rating) are required.

Resistors R1 in Fig. 5-17 are used to limit the surge currents through the rectifiers. Their values are based on the transformer voltage and the rectifier surge-current rating, since at the instant the power supply is turned on the filter capacitors look like a short-circuited load. Provided the limiting resistors can withstand the surge current, their current-handling capacity is based on the maximum load current from the supply.

Output voltages approaching twice the peak voltage of the transformer can be obtained with the voltage-doubling circuit of Fig. 5-17. Fig. 5-18 shows how the voltage depends upon the ratio of the series resistance to the load resistance, and the product of the load resistance times the filter capacitance.

When one side of the transformer secondary must be at ground potential, as when the ac is derived from a heater winding, the voltage-multiplying circuits of Fig. 5-19 can be used. In the voltage-doubling circuit at A, C1 charges through the left-hand rectifier during one half of the ac cyle; the other rectifier is nonconductive during this time. During the other half of the cycle the right-hand rectifier conducts and C2 becomes charged; they see as the source the transformer plus the voltage in C1. By reversing the polarities of the capacitors and rectifiers, the + side of the output can be grounded.

VOLTAGE TRIPLING AND QUADRUPLING

A voltage-tripling circuit is shown in Fig. 5-19B. On one half of the ac cycle C1 is charged to the source voltage through the left-hand rectifier. On the opposite half of the cycle the middle rectifier conducts and C2 is charged to twice the source voltage, because it sees the transformer plus the charge in C1 as its source. (The left-hand rectifier is cut off on this half cycle.) At the same time the right-hand rectifier conducts and, with the transformer and the charge in C2 as the source, C3 is charged to three times the transformer voltage. The + side of the output can be grounded if the polarities of all of the capacitors and rectifiers are reversed.

The voltage-quadrupling circuit of Fig. 5-19C works in substantially similar fashion.

In any of the circuits of Fig. 5-19, the output voltage will approach an exact multiple (2, 3 or 4, depending upon the circuit) of the peak ac voltage when the output current drain is low and the capacitance values are high.

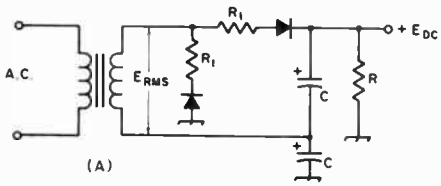

E_{PEAK} = 2.8 E_{RMS}
E_{PRV} = 2.8 E_{RMS}

Fig. 5-17 — Full-wave voltage-doubling circuit. Values of limiting resistors, R1, depend upon allowable surge currents of rectifiers.

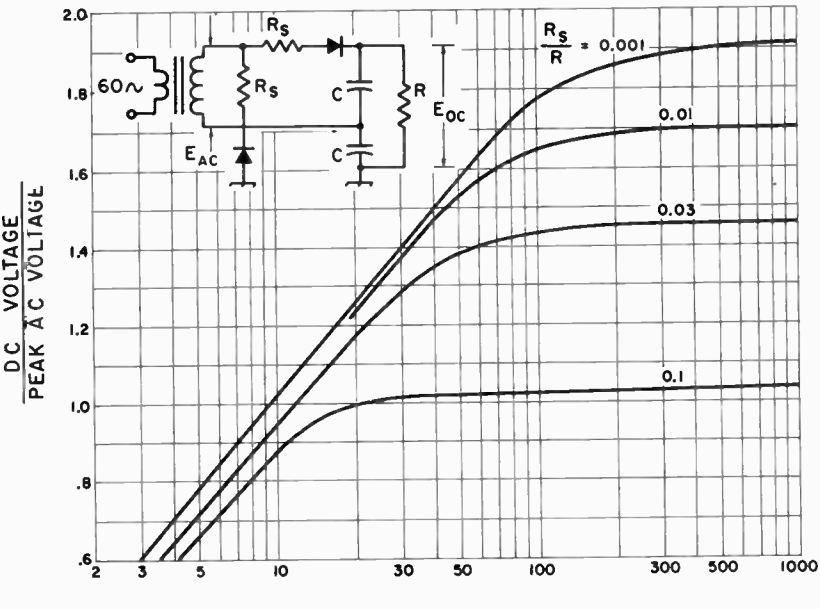

Fig. 5-18 — Dc output voltages from a full-wave voltage-doubling circuit as a function of the filter capacitances and load resistance. For the ratio R_s/R, both resistances are in ohms; for the RC product, R is in thousands of ohms. Equal resistance values for R_s and equal capacitance values for C are assumed.

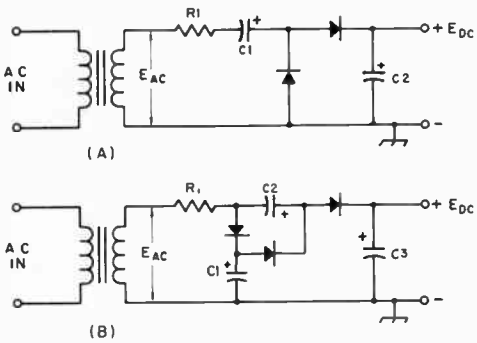

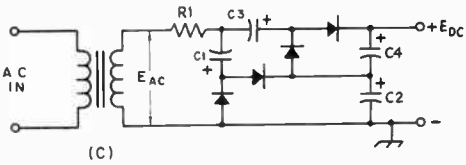

Fig. 5-19 — Voltage-multiplying circuits with one side of transformer secondary grounded. (A) Voltage doubler (B) Voltage tripler (C) Voltage quadrupler.

Capacitances are typically 20 to 50 μF depending upon output current demand. Dc ratings of capacitors are related to E_{peak} (1.4 E_{ac}):

C1 — Greater than E_{peak}
C2 — Greater than $2E_{peak}$
C3 — Greater than $3E_{peak}$
C4 — Greater than $4E_{peak}$

VOLTAGE DROPPING

Series Voltage-Dropping Resistor

Certain plates and screens of the various tubes in a transmitter or receiver often require a variety of operating voltages differing from the output voltage of an available power supply. In most cases, it is not economically feasible to provide a separate power supply for each of the required voltages. If the current drawn by an electrode (or combination of electrodes operating at the same voltage) is reasonably constant under normal operating conditions, the required voltage may be obtained from a supply of higher voltage by means of a voltage-dropping resistor in series, as shown in Fig. 5-10A. The value of the series, resistor, R1, may be obtained from Ohm's Law,

$$R = \frac{E_d}{I}$$

where E_d is the voltage *drop* required from the supply voltage to the desired voltage and I is the total rated current of the load.

Example: The plate of the tube in one stage and the screens of the tubes in two other stages require an operating voltage of 250. The nearest available supply voltage is 400 and the total of the rated plate and screen currents is 75 mA. The required resistance is

$$R = \frac{400 - 250}{075} = \frac{150}{.075} = 2000 \text{ ohms}$$

The power rating of the resistor is obtained from P (watts) = I^2R = $(0.075)^2 \times (2000)$ = 11.2 watts. A 20-watt resistor is the nearest safe rating to be used.

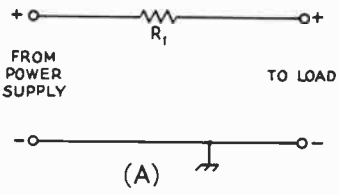

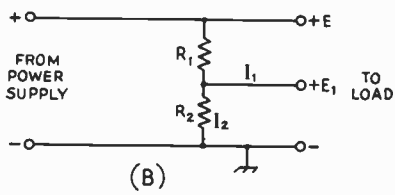

Fig. 5—20 — A — Series voltage-dropping resistor. B — Simple voltage divider.

$$R2 = \frac{E1}{I2}; R1 = \frac{E - E1}{I1 + I2}$$

$I2$ must be assumed

C — Multiple divider circuit.

$$R3 = \frac{E2}{I3}; R2 = \frac{E1 - E2}{I2 + I3}; R1 = \frac{E - E1}{I1 + I2 + I3}$$

$I3$ must be assumed

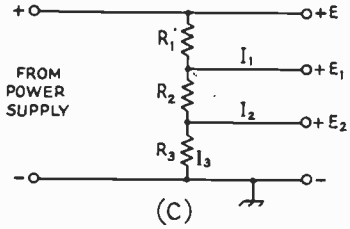

Voltage Dividers

The regulation of the voltage obtained in this manner obviously is poor, since any change in current through the resistor will cause a directly proportional change in the voltage drop across the resistor. The regulation can be improved somewhat by connecting a second resistor from the low-voltage end of the first to the negative power-supply terminal, as shown in Fig. 5-20B. Such an arrangement constitutes a voltage divider. The second resistor, R2, acts as a constant load for the first, R1, so that any variation in current from the tap becomes a smaller percentage of the total current through R1. The heavier the current drawn by the resistors when they alone are connected across the supply, the better will be the voltage regulation at the tap.

Such a voltage divider may have more than a single tap for the purpose of obtaining more than one value of voltage. A typical arrangement is shown in Fig. 5-20C. The terminal voltage is E, and two taps are provided to give lower voltages, E1 and E2, at currents I1 and I2 respectively. The smaller the resistance between taps in proportion to the total resistance, the lower is the voltage between the taps. The voltage divider in the figure is made up of separate resistances, R1, R2 and R3. R3 carries only the bleeder current, I3; R2 carries I2 in addition to I3; R1 carries I1, I2 and I3. To calculate the resistances required, a bleeder current, I3, must be assumed; generally it is low compared with the total load current (10 percent or so). Then the required values can be calculated as shown in the caption of Fig. 5-20, I being in decimal parts of an ampere.

The method may be extended to any desired number of taps, each resistance section being calculated by Ohm's Law using the needed voltage drop across it and the total current through it. The power dissipated by each section may be calculated by multiplying I and E or I^2 and R.

VOLTAGE STABILIZATION

Gaseous Regulator Tubes

There is frequent need for maintaining the voltage applied to a low-voltage low-current circuit at a practically constant value, regardless of the voltage regulation of the power supply or variations in load current. In such applications, gaseous regulator tubes (0B2/VR105, 0A2/VR150, etc.) can be used to good advantage. The voltage drop across such tubes is constant over a moderately wide current range. Tubes are available for regulated voltages near 150, 105, 90 and 75 volts.

The fundamental circuit for a gaseous regulator is shown in Fig. 5-21. The tube is connected in series with a limiting resistor, R1, across a source of voltage that must be higher than the starting voltage. The starting voltage is about 30 to 40 percent higher than the operating voltage. The load is connected in parallel with the tube. For stable operation, a minimum tube current of 5 to 10 mA is required. The maximum permissible current with most types is 40 mA; consequently, the load current cannot exceed 30 to 35 mA if the voltage is to be stabilized over a range from zero to maximum load. A single VR tube may also be used to regulate the voltage to a load current of almost any value as long as the *variation* in the current does not exceed 30 to 35 mA. If, for example, the average load current is 100 mA, a VR tube may be used to hold the voltage constant provided the current does not fall below 85 mA or rise above 115 mA.

The value of the limiting resistor must lie between that which just permits minimum tube current to flow and that which just passes the maximum permissible tube current when there is no load current. The latter value is generally used. It is given by the equation:

$$R = \frac{(E_s - E_r)}{I}$$

where R is the limiting resistance in ohms, E_s is the voltage of the source across which the tube and resistor are connected, E_r is the rated voltage drop across the regulator tube, and I is the maximum tube current in amperes (usually 40 mA, or .04 A).

Two tubes may be used in series to give a higher regulated voltage than is obtainable with one, and also to give two values of regulated voltage. Regulation of the order of 1 percent can be obtained with these regulator tubes when they are operated within their proper current range. The capacitance in shunt with a VR tube should be limited to 0.1 μF or less. Larger values may cause the tube drop to oscillate between the operating and starting voltages.

ZENER DIODE REGULATION

A Zener diode (named after Dr. Carl Zener) can be used to stabilize a voltage source in much the same way as when the gaseous regulator tube is used. The typical circuit is shown in Fig. 5-22A. Note that the cathode side of the diode is connected to the positive side of the supply. The electrical characteristics of a Zener diode under conditions of forward and reverse voltage are given in Chapter 4.

Zener diodes are available in a wide variety of voltages and power ratings. The voltages range from less than 2 to a few hundred, while the power ratings (power the diode can dissipate) run from less than 0.25 watt to 50 watts. The ability of the Zener diode to stabilize a voltage is dependent upon the conducting impedance of the diode, which can be as low as one ohm or less in a low-voltage high-power diode to as high as a thousand ohms in a low-power high-voltage diode.

Diode Power Dissipation

Unlike gaseous regulator tubes, Zener diodes of a particular voltage rating have varied maximum current capabilities, depending upon the power ratings of each of the diodes. The power dissipated in a diode is the product of the voltage across it and the current through it. Conversely, the maximum current a particular diode may safely conduct equals its power rating divided by its voltage rating. Thus, a 10-V 50-W Zener diode, if

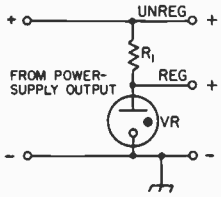

Fig. 5-21 — Voltage stabilization circuit using a VR tube. A negative-supply output may be regulated by reversing the polarity of the power-supply connections and the VR-tube connections from those shown here.

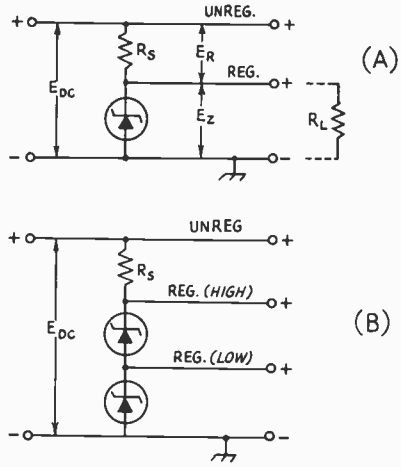

Fig. 5-22 — Zener-diode voltage regulation. The voltage from a negative supply may be regulated by reversing the power-supply connections and the diode polarities.

operated at its maximum dissipation rating, would conduct 5 amperes of current. A 10-V 1-W diode, on the other hand, could safely conduct no more than 0.1 A, or 100 mA. The conducting impedance of a diode is its voltage rating divided by the current flowing through it, and in the above examples would be 2 ohms for the 50-W diode, and 100 ohms for the 1-W diode. Disregarding small voltage changes which may occur, the conducting impedance of a given diode is a function of the current flowing through it, varying in inverse proportion.

The power-handling capability of most Zener diodes is rated at 25 degrees C, or approximately room temperature. If the diode is operated in a higher ambient temperature, its power capability must be derated. A typical 1-watt diode can safely dissipate only 1/2 watt at 100 degrees C.

Limiting Resistance

The value of R_s in Fig. 5-22 is determined by the load requirements. If R_s is too large the diode will be unable to regulate at large values of I_L, the current through R_L. If R_s is too small, the diode dissipation rating may be exceeded at low values of I_L. The optimum value for R_s can be calculated by:

$$R_S = \frac{E_{DC}\,(\text{min}) - E_Z}{1.1\,I_L\,(\text{max})}$$

When R_S is known, the maximum dissipation of the diode, P_D, may be determined by:

$$P_D = \left[\frac{E_{DC}\,(\text{max}) - E_Z}{R_S} - I_L\,(\text{min})\right] E_Z$$

In the first equation, conditions are set up for the Zener diode to draw 1/10 the maximum load

current. This assures diode regulation under maximum load.

Example: A 12-volt source is to supply a circuit requiring 9 volts. The load current varies between 200 and 350 mA.

$E_Z = 9.1$ V (nearest available value).

$$R_S = \frac{12 - 9.1}{1.1 \times .35} = \frac{2.9}{.385} = 7.5 \text{ ohms}$$

$$P_D = \left[\frac{12 - 9.1}{7.5} - .2\right] 9.1 = .185 \times 9.1 = 1.7 \text{ W}$$

The nearest available dissipation rating above 1.7 W is 5; therefore, a 9.1-V 5-W Zener diode should be used. Such a rating, it may be noted, will cause the diode to be in the safe dissipation range even though the load is completely disconnected [I_L (min) = 0].

Obtaining Other Voltages

Fig. 5-22B shows how two Zener diodes may be used in series to obtain regulated voltages not normally obtainable from a single Zener diode, and also to give two values of regulated voltage. The diodes need not have equal breakdown voltages, because the arrangement is self equalizing. However, the current-handling capability of each diode should be taken into account. The limiting resistor may be calculated as above, taking the sum of the diode voltages as E_Z, and the sum of the load currents as I_L.

ELECTRONIC VOLTAGE REGULATION

Several circuits have been developed for regulating the voltage output of a power supply electronically. While more complicated than the VR-tube and Zener-diode circuits, they will handle higher voltage and current variations, and the output voltage may be varied continuously over a wide range. In the circuit of Fig. 5-23, the 0B2 regulator tube supplies a reference of approximately +105 volts for the 6AU6A control tube. When the load connected across the output terminals increases, the output voltage tends to decrease. This makes the voltage on the control grid of the 6AU6A less positive, causing the tube to draw less current through the 2-megohm plate resistor. As a consequence the grid voltage on the 6L6GB decreases, compensating for the reduction in output voltage. With the values shown, adjustment of R1 will give a regulated output from 150 to 250 volts, at up to 60 or 70 mA. The available output current can be increased by adding tubes in parallel with the series regulator tube. When this is done, 100-ohm resistors should be wired to each control grid and plate terminal, to reduce the chances for parasitic oscillations.

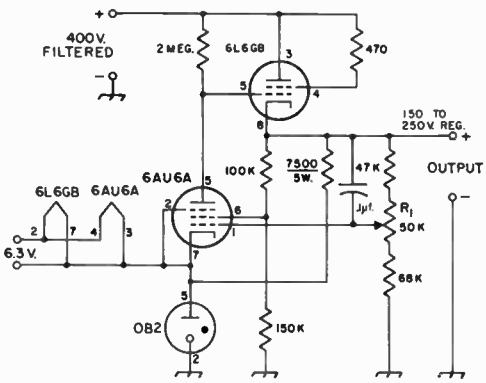

Fig. 5-23 — Electronic voltage-regulator circuit. Resistors are 1/2 watt unless specified otherwise.

Solid-State Regulators

One of the simplest forms of solid-state regulation is shown at Fig. 5-24. A bridge rectifier supplies 25 volts dc to a series regulator transistor, Q1, whose base bias is established by means of a Zener diode, CR5, providing a voltage reference of a fixed level. C1 is the input capacitor for the filter and C2 filters out the ripple which appears across CR5. R1 is chosen to establish a safe Zener-diode current, which is dependent upon the wattage rating of the diode. A 1-watt Zener diode is adequate for the circuit of Fig. 5-24. R2 is a bleeder resistor and C3 is an rf bypass. If several output voltages are desired, say from 6 to 18 volts, Zener diodes from 6 to 18 volts can be wired to S2 as shown. When a 2N1970 is used at Q1, the value of R1 will be 680 ohms. This value offers a compromise for the 5 reference diodes used (6, 9, 12, 15 and 18 volts).

The output of the supply is equal to the Zener voltage minus the emitter-to-base bias voltage of Q1. Both the Zener voltage and bias voltage change with load variations. The bias voltage will be approximately zero with only R2 as a load, but will rise to roughly 0.3 volt with a 1-A load connected to the output. An increase in load current lowers the unregulated dc input voltage which appears across CR5 and R1. Zener current is reduced, decreasing the voltage at which the diode regulates. How much the voltage drops depends upon the characteristics of the particular Zener employed.

This power supply has very low output ripple. The main limitation of this circuit is the possibility of destroying Q1, the series-regulator transistor, when a dead short or heavy overload is connected across the output of the supply. To protect Q1 during normal operation, it should be mounted on a fairly large heat sink which is thermally coupled to the main chassis of the supply. The transistor should be insulated from the sink by means of a mica spacer and a thin layer of silicone grease. The sink can then be bolted directly to the chassis.

An Improved Transistor Regulator

A versatile, yet simple, regulated low-voltage supply is shown in the practical circuit of Fig. 5-25. A current-limiting resistor, R5, is connected between the unregulated dc and Q1 to protect

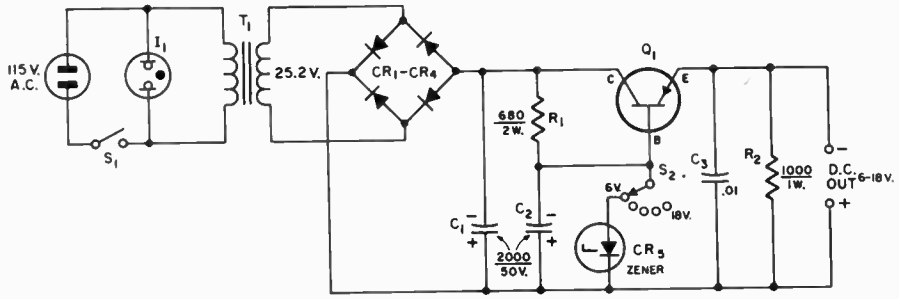

Fig. 5-24 — Schematic diagram of the power supply. Capacitances are in μF; capacitors marked with a polarity are electrolytic. Resistances are in ohms; R1 and R2 are composition.
C1, C2 — 2000-μF 50 volts dc electrolytic (Mallory CG23U50C1).
C3 — .01-μF disk ceramic.
CR1-CR4, incl. — 50 PRV 3-A silicon diode (Motorola 1N4719).
CR5 — Voltage regulator diode.
I1 — Neon lamp assembly with resistor (Leecraft 32-2111).
Q1 — 2N1970.
S1 — Spst toggle switch.
S2 — Phenolic rotary, 1 section, 2-pole (1 used), 6-position, shorting (Mallory 3126J).
T1 — Filament transformer, 25.2 V, 2 A (Knight 54 D 4140 or similar).

against current overloads. The addition of R5 does not have a significant effect upon the regulation of the supply. R6 supplies current to CR1 and is set to provide approximately 5 mA. Q1 and Q3 are connected in what is called a Darlington pair. At first approximation, Q3 can be regarded as a current amplifier which also raises the base impedance of Q1 as seen by the collector circuit of Q2. C2 and R4 prevent high-frequency oscillation from occurring. C3 helps to improve the transient response and R2 has been made variable to provide a means for adjusting the output voltage. C4 reduces ripple across CR1, thus greatly reducing the ripple in the regulator output. R7 prevents Q3 from being cut off at low output currents. As in the supply of Fig. 5-24, Q1 should be mounted on a fairly large heat sink, preferably above the chassis, and R5 should also be in the clear. These two components should be spaced well away from Q2, Q3 and CR1 to prevent their heat from affecting the latter three components. The accompanying table shows typical operating conditions for this regulator.

Integrated-circuit devices can be used in a sold-state regulator circuit to replace many of the discrete components shown in Fig. 5-25. See the adjustable regulated transistor power supply in the construction section of this chapter.

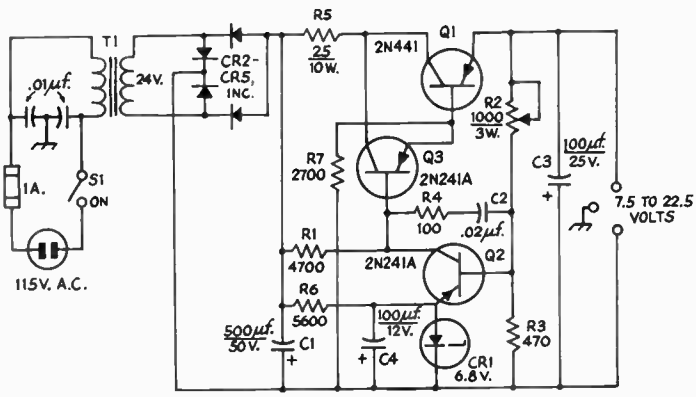

Fig. 5-25 — Circuit of the improved regulator. Resistance is in ohms. Fixed-value resistors are 1/2-watt composition unless otherwise noted. Polarized capacitors are electrolytic. CR1 is a 1N754 Zener diode, or equal. CR2-CR5, incl., are 1N191s or equiv. T1 is a 24-volt, 1-ampere transformer.

Table of operating conditions for Fig. 5-25

E_o Volts	I_o[1] mA	E_{AC}[2] mV rms	E_1[3] mV	E_3[4] mV
7.5	300	3.3	75	25
10.0	250	4.2	85	30
12.5	230	4.6	95	35
15.0	170	5.0	100	45
17.5	135	5.3	100	55
20.0	100	6.0	100	65
22.5	90	8.0	110	90

1 Maximum load current with 117 V ac input.
2 Output ripple voltage at maximum load 117 V ac input.
3 Change in output voltage as output current is varried from no load to full load with constant 117 V ac input.
4 Change in output voltage with a constant load corresponding to one half that of Column 2 as the line voltage is varied from 105 to 125 volts.

BIAS SUPPLIES

Bias supplies are used to provide grid voltage to the PA and modulator stages of amateur transmitters, to supply grid voltage to linear amplifiers, and to provide control voltage for cutting off receiver and transmitter output. Negative bias voltage is also used for grid-block keying in most modern amateur exciters.

Typical circuits for bias supplies are shown in Fig. 5-26. At A, a simple half-wave rectifier (CR1) provides dc voltage to R1, which is adjusted for the desired output. If the bias is being fed to a Class C amplifier, the circuit at B is preferred. R1 is used to set the bias voltage at the desired level and R2 is the value that would ordinarily be used as a grid-leak resistor for the Class C stage. No other grid resistor should be used.

A voltage-doubler bias supply is shown at C. T1 is chosen to provide the desired output voltage, when doubled, while allowing for the voltage drop across R4. Zener diodes are connected in series (CR3 through CR5, incl.) to offer regulation and to enable the user to obtain three different bias voltages. The Zener diodes are selected for the operating voltages required. Fewer, or more, Zener diodes can be connected in the string, or a single Zener diode can be used. R4 is adjusted to provide the proper Zener-diode current for the string, and its wattage must be sufficient to handle the current flowing through it. R2 and R3 are current-limiting resistors to protect CR1 and CR2.

Of course, full-wave center-tapped and full-wave bridge rectifiers can be used in place of the half-wave examples shown in Fig. 5-26. Similarly, voltage triplers can be used in bias supplies. The full-wave rectifiers are easier to filter and may be preferred for some applications.

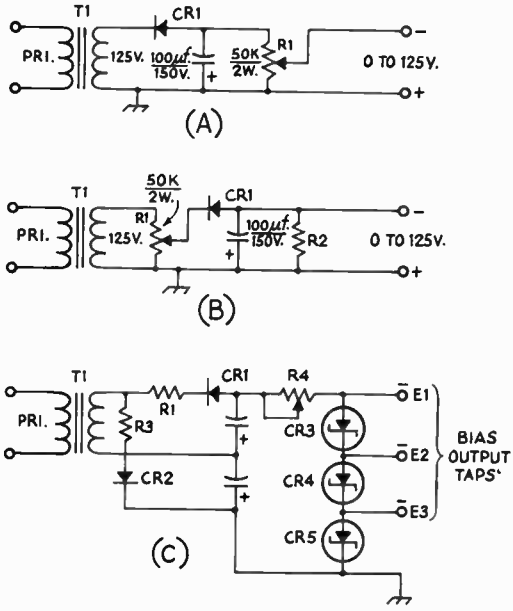

Fig. 5-26 — Circuits of typical bias supplies using solid-state rectifiers. The circuit at B is preferred if the bias is to be supplied to a Class C amplifier stage. Zener-diode regulation is shown at C.

CONSTRUCTION OF POWER SUPPLIES

The length of most leads in a power supply is unimportant, so the arrangement of components from this consideration is not a factor. More important are the points of good high-voltage insulation, adequate conductor size for filament wiring – and most important of all – safety to the operator. Exposed high-voltage terminals or wiring which might be bumped into accidentally should not be permitted to exist. They should be covered with adequate insulation or made inaccessible to contact during normal operation and adjustment of the transmitter. Power-supply units should be fused individually. All negative terminals of plate supplies and positive terminals of bias supplies should be securely grounded to the chassis, and the chassis connected to a waterpipe or radiator ground. All transformer, choke, and capacitor cases should also be grounded to the chassis. Ac power cords and chassis connectors should be arranged so that exposed contacts are never "live." Starting at the conventional ac wall outlet which is female, one end of the cord should be fitted with a male

plug. The other end of the cord should have a female receptacle. The input connector of the power supply should have a male receptacle to fit the female receptacle of the cord. The power-output connector on the power supply should be a female socket, never a male type. A male plug to fit this socket should be connected to the cable going to the equipment. The opposite end of the cable should be fitted with a female connector, and the series should terminate with a male connector on the equipment. There should be no "live" exposed contacts at any point, regardless of where a disconnection may be made.

Rectifier filament leads should be kept short to assure proper voltage at the rectifier socket. Through a metal chassis, grommet-lined clearance holes will serve for voltages up to 500 or 750, but ceramic feedthrough insulators should be used for higher voltages. Bleeder and voltage-dropping resistors should be placed where they are open to air circulation. Placing them in a confined space reduces the rating. Other precautions are given earlier in this chapter, in the section on power-line considerations.

ADJUSTABLE REGULATED TRANSISTOR POWER SUPPLY

This power supply will develop from 3.5 to 21 volts at 1.5 amperes. These capabilities should prove adequate for powering most solid-state devices, or for general-purpose use as a bench supply for solid-state projects. An RCA CA3055 integrated-circuit regulator and a 2N3055 pass transistor are the only active components needed beyond those of a simple unregulated supply. The design includes short-circuit protection, so that a dead short across the output terminals will cause no damage to the supply, even though the output-voltage control may be set for maximum.

The Circuit

A potential of approximately 26 volts is delivered by the bridge rectifier and 3000-μF filter capacitor to the regulator section of the circuit. The conduction of Q1 is governed by the voltage applied to its base from the output of U1, thereby controlling the output voltage. U1 contains its own Zener reference diode. The regulated output voltage is adjusted with R2. R1, a 56-ohm fixed resistor, establishes the limiting value for the current delivered to the load. Increasing the value of this shutdown resistor will decrease the maximum available current, and vice versa. The function is approximately linear in inverse proportion – halving the resistance value doubles the value at which the output current is limited. The 56-ohm value of Fig. 2 was selected to maintain a current level within the maximum ratings of T1 and Q1 in the event a short circuit of extended duration was connected across the output. A variable control, such as a 1000-ohm value, could be placed in series with R1 to provide for adjustable current limiting at the regulated output.

A 0- to 3-mA meter, M1, is used to monitor either the output voltage or the output current, with selection made at S2. R3 serves as the shunt element for current measurements, and R4 plus R5 serve as the multiplier resistors for voltage measurements. R3 is homemade from a 1 1/2-inch length of No. 30 copper wire, wound over a 1-megohm 1/2 watt resistor. This shunt causes M1 to indicate at full scale with a load current of 1.5 amperes. With meter movements other than that specified in the parts list, it may be necessary to alter the length of wire for the desired current range. In any event, the current readings should be checked against an ammeter having reliable calibration.

The meter is calibrated to read half scale at 15 volts with S2 in the VOLTAGE position. Calibration adjustment is made with R4 against a known standard.

Construction

The power supply is built into a two-piece cabinet assembly. The bottom piece serves as the main chassis, front panel, and rear panel. The top piece serves also as the sides. Figs. 1 and 3 show the arrangement of parts used in this model, although the layout is not critical. Neither the positive nor the negative side of the output

Fig. 1 – The regulated power supply is housed in a homemade two-piece metal box. Binding posts are used for the dc output, neither side of which is grounded. The third jack is a ground connected to the case. On-off and meter switches flank the meter. The knob at the lower left is mounted on the voltage-control potentiometer.

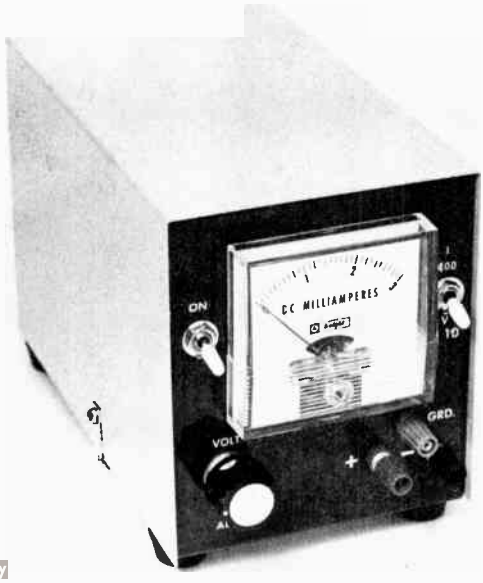

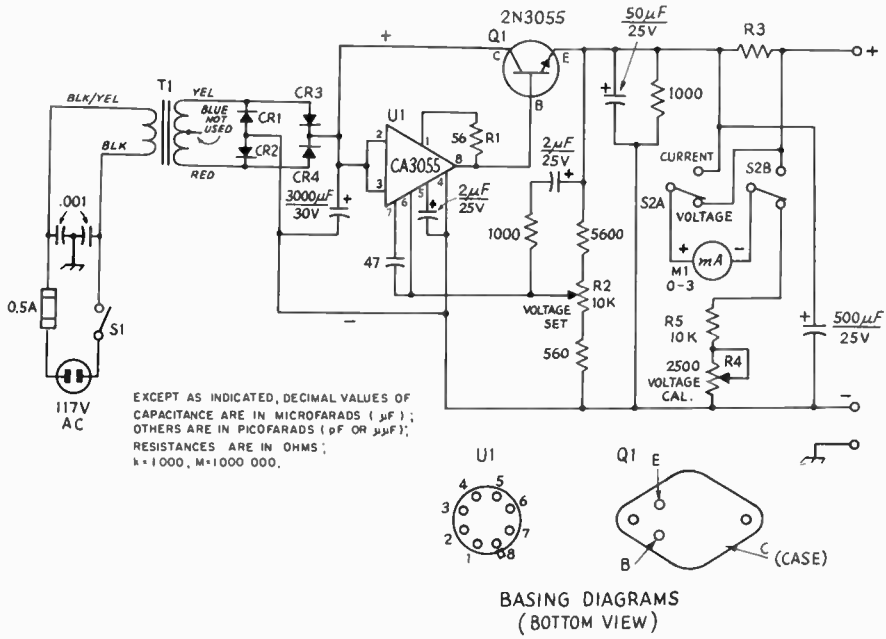

Fig. 2 — Circuit of the transistor power supply. Resistances are in ohms; resistors are 1/2 watt 10-percent tolerance unless otherwise noted. Capacitors with polarity indicated are electrolytic; others are ceramic.

CR1-CR4, incl. — 100 PRV 3 A (Motorola 1N4720 or equiv.)
M1 — 0-3 mA (Knight 701-0021 or equiv.)
Q1 — Silicon npn power transistor, 2N3055 (Radio Shack Archer 276-592 suitable).
R1, R5 — For text reference.
R2 — Linear taper, panel mount.
R3 — See text.
R4 — Linear taper, printed-circuit type.
S1 — Spst.
S2 — Dpdt.
T1 — Primary 117 V; 21-V, 1.5-A secondary (Stancor TP-4 or equiv.)
U1 — Integrated circuit voltage regulator, RCA CA3055.

connections is grounded to the chassis. Instead, three binding posts are used, the third being connected to the chassis. By appropriate jumpering at the front-panel binding posts, either a negative-ground or a positive-ground output may be used.

Most of the small circuit components are mounted on a piece of etched circuit board which is mounted vertically. This board is visible in Fig. 3 between the front panel and the homemade heat sink for Q1. Components in the metering circuit are mounted on tie-point strips located near the front panel.

The case of Q1 must be insulated from the chassis. A mica washer coated with silicone grease and insulating sleeves for the mounting screws should be used.

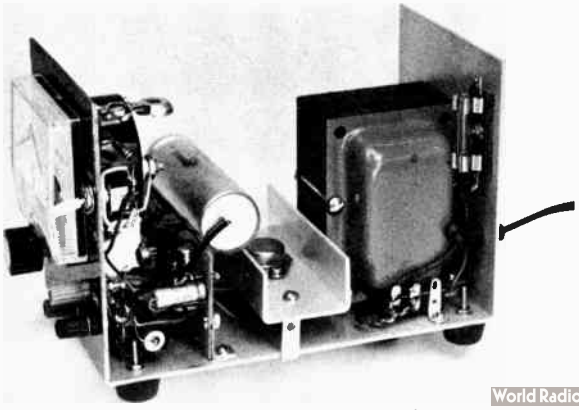

Fig. 3 — View of the regulated transistor supply from the side. The transistor mounted in the U-shaped heat sink is Q1. The rectifiers, CR1 through CR4, are mounted beneath the meter on a tie point strip, and are partially hidden in this view. The large capacitor sitting atop the etched circuit board is the 3000-μF filter capacitor connected at the rectifier output.

A 700-VOLT GENERAL–PURPOSE SUPPLY FOR TRANSCEIVERS

This power supply is designed to be used with many of the medium-power ssb transceivers that are commercially available. It has variable bias and low-voltage lines, making it adaptable to most equipment needs. The high voltage is approximately the value that most sweep-tube and 6146 PA stages require. In this model a discarded TV set transformer provides the heart of the supply. The filament circuit can be hooked up for 6.3- or 12.6-volt output.

Fig. 1 — A top-chassis view of the general-purpose power supply. T1, at the far left, is a transformer from a discarded TV set. The high-wattage resistors are housed in the perforated shield at the far right. The bottom of the chassis is enclosed and has four rubber feet attached to the cover plate.

Circuit Information

In Fig. 2, the primary circuit of T1 has a diode-protection relay, K1, and a 25-ohm surge resistor, R3, in one side of the line. When the supply is first turned on, R3 drops the primary voltage to T1 until the capacitor bank at the output of the bridge rectifier is charged. Then, the voltage drop across R3 lessens and enables K1 to pull in, thus shorting out the limiting resistor until the next time the supply is used. This form of protection prevents high surge currents from harming the diode bridge, CR1 through CR4, inclusive.

A standard bridge-rectifier string changes the secondary voltage of T1 to dc. Three 200-μF

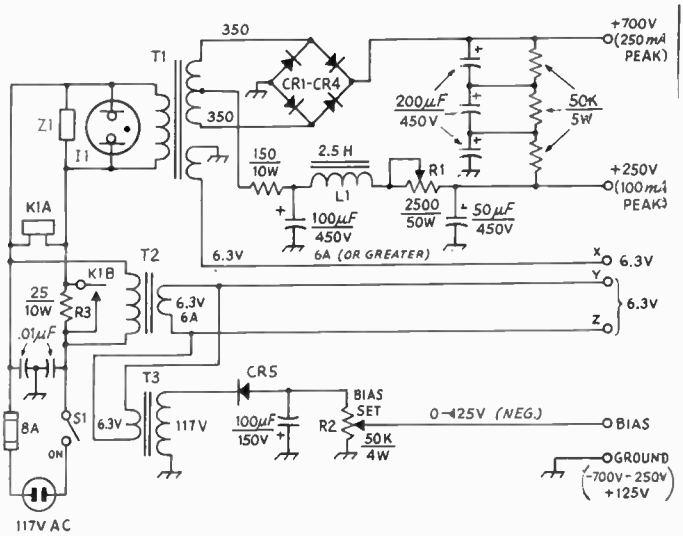

Fig. 2 — Schematic of the power supply. Capacitors are disk ceramic, 1000 volts, except those with polarity marking, which are electrolytic. Resistance is in ohms, k = 1000.

CR1-CR4, incl. — 1000 PRV, 1-ampere silicon diode.
CR5 — 200 PRV, 500 mA silicon diode.
K1 — 115-V ac relay with spst 10-ampere contacts.
L1 — 2.5-H 130-mA filter choke (Allied-Knight 6X24HF or equiv.)
R1 — 2500-ohm, 50-watt adjustable resistor.
R2 — Wirewound, adjustable.
R3 — For text reference.
S1 — Spst toggle switch with 10-ampere contacts.
T1 — TV-set transformer, 350 or 375 volts each side of center tap, with 6.3-volt winding (5-volt winding not used). Use Stancor P-6315 as alternate.
T2 — 6.3-volt, 6-ampere filament transformer.
T3 — 6.3-volt, 1-ampere filament transformer.
Z1 — Thyrector assembly (for transient suppression). G. E. No. 6RS20SP4B4 suitable.

capacitors are series-connected to filter the dc, thus providing a 1350-volt 66-μF rating for the filter. Voltage equalization across the capacitors is effected by the three 50,000-ohm 5-watt resistors shown. The resistor string doubles as a bleeder.

Filtered low voltage is taken from the secondary center tap of T1, and is determined by the setting of R1. With ordinary transceivers, R1 can be adjusted to provide anything from 200 volts to as much as 300 volts. Its actual setting will depend upon the current drawn by the low-voltage circuit of the equipment. L1, in the filter section of the low-voltage supply, was not used in the model photographed. As a consequence, a fair amount of ripple is present on the output voltage with near-maximum current drain.

T2 supplies 6.3 volts for powering the filaments of the transceiver. Alternatively, the 6.3-volt winding of T1 can be used. If the equipment is wired for 12-volt filament operation, points X and Y can be joined and the output taken between Z and chassis ground. The phasing of T1 and T2 must be correct if the two voltages are to add, rather than cancel. If 12 volts do not appear with the filament string connected, merely reverse the primary leads of *one* of the two transformers.

Bias is taken from T3, a 6.3-volt 1-ampere filament transformer which is connected back-to-back with T2. CR5 is a half-wave rectifier, and its output is filtered by a 100-μF capacitor. The required amount of bias is obtained by adjustment of R2.

The supply is built on an 11 X 10 X 2 1/2-inch aluminum chassis. R1 and the 150-ohm 10-watt resistor at the ct of T1 are mounted atop the chassis for cooling purposes. They are enclosed in a perforated shield to prevent accidental shock to the operator.

A 3000–VOLT POWER SUPPLY

This high-voltage power supply is designed for use with linear amplifiers that are capable of operating at maximum legal input power levels. Typically, this supply can be used with amplifiers which use two 3-500Z tubes, a single 4-1000A or 3-1000Z, or any tube or combination thereof which calls for 3000 volts dc at up to 700 mA. Examples of such amplifiers can be found in Chapter 6. The supply can be operated from either 115- or 230-volt ac mains. (From *QST*, Dec., 1969.)

Though this power supply can be operated from the 115-volt line, it is recommended that the 230- volt mains be used in the interest of best regulation. The circuit breakers shown in Fig. 3C can be eliminated if the equipment is to be operated from mains which have their own circuit breakers or fuses.

"Computer-grade" filter capacitors are used in this circuit. Each capacitor is bridged by a 25k-ohm, 20-watt resistor. Each resistor serves as a part of the bleeder string, while at the same time functioning as a voltage equalizer for its respective capacitor. The idling current of most linear amplifiers further bleeds the power supply when the equipment is turned on. A panel meter, M1, is set to read 0 to 5000 volts, and should be observed for a *zero reading* before working on the power supply. *The supply should be disconnected from the mains before removing the protective covers from it.*

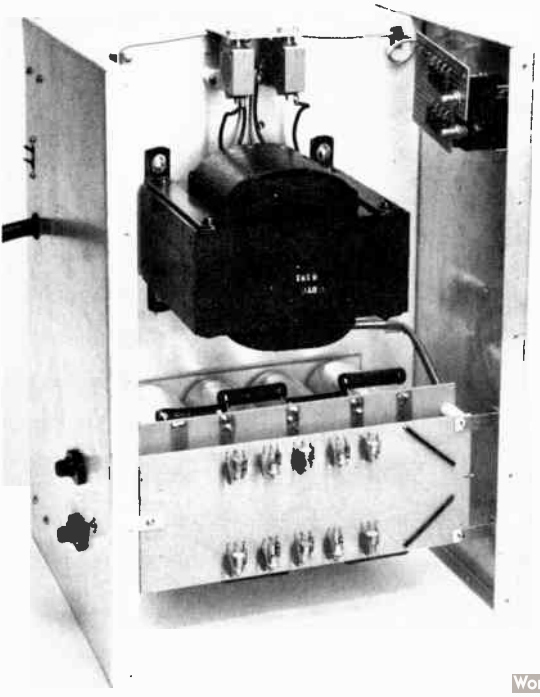

Fig. 1 — Top view of the assembled power supply, cover removed. The circuit breakers are mounted on an L-bracket at the top of the chassis. Their reset buttons are accessible from outside the shield cover. Lips are formed on the sides and tops of the front and rear panels to facilitate mounting the screen cover. Alternatively, angle bracket stock can be used in place of the lips.

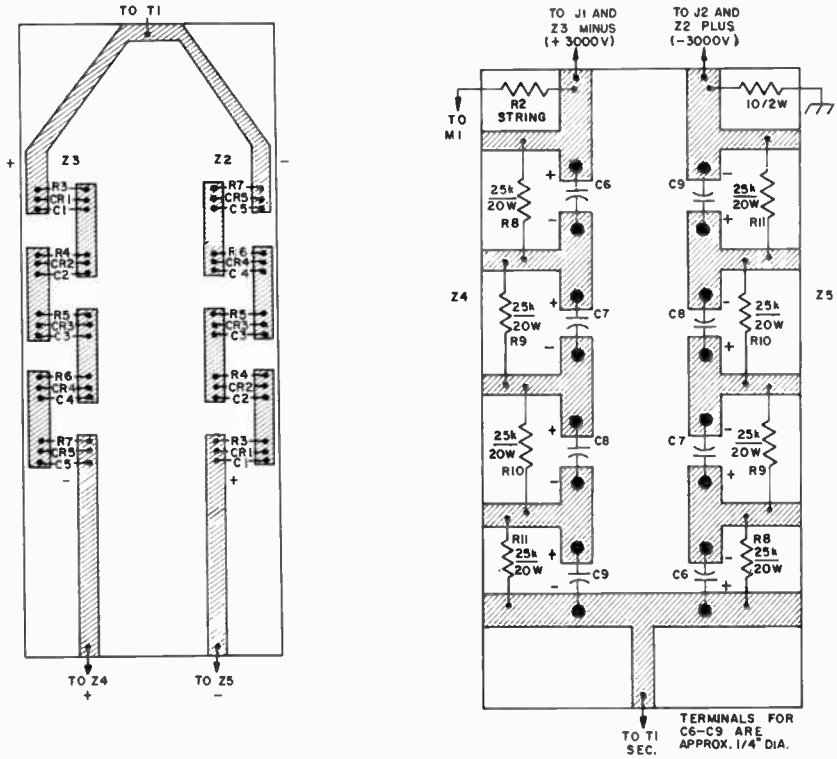

Fig. 2 — Layouts for the circuit boards used at Z2 through Z5. To assure good insulating properties high-quality glass-epoxy board should be used.

Because silicon rectifiers are used in this supply, provisions for their protection are included. Each diode is bridged by a 0.01-μF capacitor and a 470k-ohm 1/2-watt resistor. A relay, K2, and a series resistor are connected in the primary leg of the supply to offer surge protection to the rectifier diodes while the capacitor bank charges. The resistor, R1, lowers the primary voltage to T1 until the capacitors are nearly charged. Then, K2 energizes and shorts out R1 to permit the applications of full primary voltage. Assembly Z1 is a Thyrector diode which limits spikes that may appear on the primary line, thus offering transient protection to the rectifier diodes. For 230-volt operation it is necessary to use two Thyrectors as shown in the alternate primary circuit of Fig. 3D.

Metering of the high-voltage output line is necessary to comply with FCC regulations. A 0- to 500-μA meter is used to read the voltage directly off the 3000-volt bus. A string of ten 1-megohm, 1-watt resistors is connected in series between the 3000-volt line and M1 to provide the 0- to 5000-volt reading needed.[1] The combined value of the resistors should be as close to 10 megohms as possible to assure good accuracy. A well calibrated ohmmeter can be used for selecting the resistors, or if an impedance bridge is available it might be used to provide better accuracy when selecting the resistors.

Construction

A standard 12 X 17 X 3-inch aluminum chassis is used for the foundation of this unit. The front and back panels of the supply are fashioned from sheet aluminum, and are 10 inches high and 17 inches wide. The top and sides of the completed power supply are enclosed by means of a single sheet of perforated aluminum which is held in place by No. 6 sheet-metal screws. Casters can be mounted to the bottom cover of the supply, if desired, to facilitate easy moving of the unit when required.

The filter capacitors are bolted to a sheet of epoxy circuit board, 5 inches wide and 10 inches long. The pattern of the copper foil is given in Fig. 2. The capacitors are held in place on the board by their terminal screws. The diode board, also shown in Fig. 2, is attached to the capacitor board by means of three 1-inch steatite insulators. The circuit-board "sandwich" is then supported from the walls of the cabinet by three aluminum L-brackets (see Fig. 1). The tops of the filter capacitors rest on a sheet of 1/8-inch-thick Plexiglas which is bolted to the main chassis, thus

[1] Do not use a single 10-megohm resistor for the metering circuit. The number used are necessary to insure against arc-over across the bodies of the resistors.

providing insulation between the chassis and the cases of the capacitors.

The ten series resistors for the metering circuit are mounted on a piece of perforated board and bolted to the back side of the meter case as shown in Fig. 1. In this model, Teflon hookup wire connects the metering resistors to the 3000-volt bus. The center conductor and its polyethylene covering from a piece of RG-11/U (shield braid and vinyl jacket removed) can be substituted for the Teflon lead.

A 10-ohm resistor is connected between the bottom resistor of the bleeder string and chassis ground. This provides a metering point for the amplifier plate current. An external voltmeter reads the voltage drop across the 10-ohm resistor to determine the current drawn.

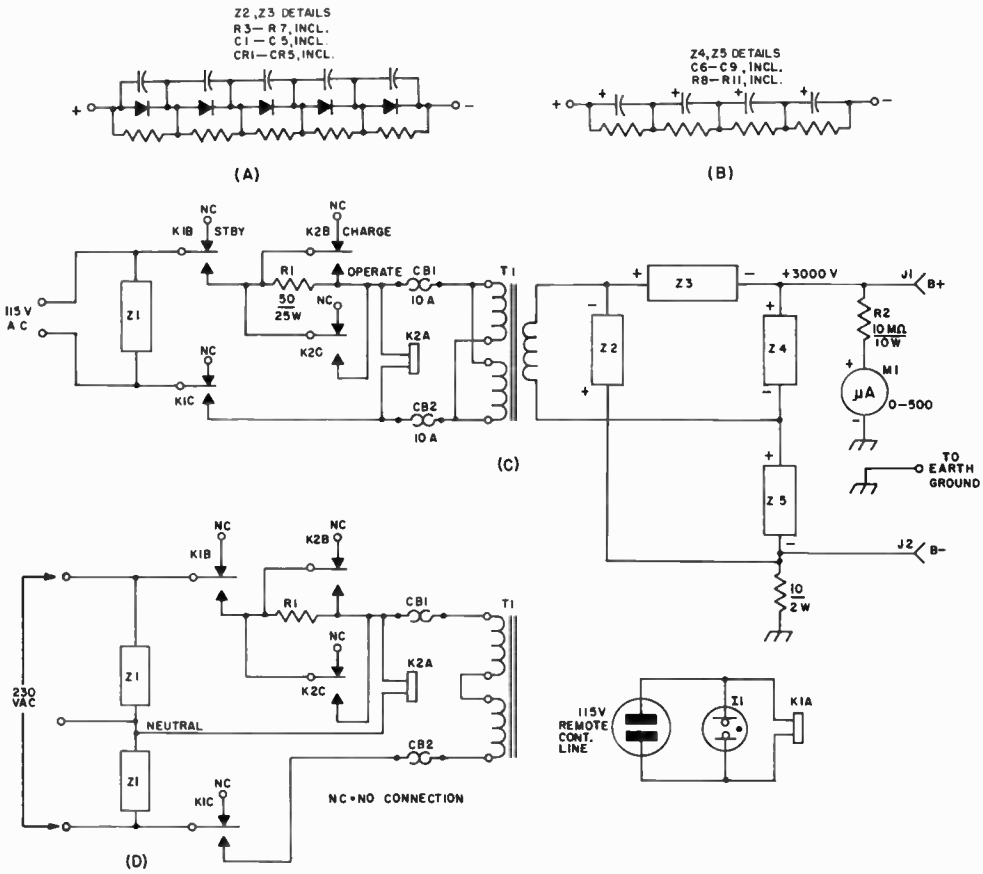

Fig. 3 — Schematic diagram of the 3000-volt power supply. Capacitors used in assemblies Z2 and Z3 are 1000-volt disk ceramic. The resistors in the two assemblies are 1/2-watt composition. Polarized capacitors are electrolytic.

C1-C5, incl. — .01-μF disk.
C6-C9, Incl. — 240-μF, 450-volt electrolytic (Mallory CG-241-T450D1).
CB1, CB2 — 10-A circuit breaker (Wood Electric 125-210-101 or equiv.).
CR1-CR5, incl. — Silicon rectifier diode, 1000 PRV, 2 A or greater.
I1 — 115-volt ac neon panel lamp.
J1, J2 — High-voltage chassis connector (James Millen 37001).
K1 — Dpst 115-volt ac relay, 25-A contacts (Potter-Brumfield PR11AY suitable; two terminals unused).
K2 — Dpst 115-volt ac relay, both sections in parallel (Guardian 200-2 with 200-115A field coil). Contacts rated at 8 A.
M1 — 0-500 μA panel meter (Simpson 1227 suitable).
R1, R2 — For text reference.
R3-R7, incl. — 0.47-megohm, 1/2-watt resistor.
R8-R11, incl. — 25,000-ohm, 20-watt resistor.
T1 — Dual 115-volt primary, 1100-V secondary, 600 VA (Berkshire BTC-6181: Berkshire Transformer Corp, Kent, CT).
Z1 — Thyrector-diode assembly (GE No. 6RS20SP4B4).
Z2-Z5, incl. — See drawings in this figure and in Fig. 2.

Bibliography

Althouse, "Voltage Multipliers," *QST*, October, 1971.

McCoy, "How to Wind Your Own Power Transformer," *QST*, February, 1970.

Zener Diode Handbook, International Rectifier Corp, 1960.

Blakeslee, "AC-Operated Regulated DC Power Supplies for Transistorized Rigs," *QST* November, 1971.

Smith and DeMaw, "A Power Supply for that Big Linear Amplifier," *QST*, December 1969.

Chapter 6

HF Transmitting

Regardless of the transmission mode – code, a-m, fm, single sideband, radioteletype, amateur TV – vacuum tubes and semiconductors are common elements in all transmitters. They are used as oscillators, amplifiers, frequency multipliers and frequency converters. These four building blocks, plus suitable power supplies, are basically all that is required to make any of the popular transmission systems.

The simplest code transmitter is a keyed oscillator working directly into the antenna; a more elaborate (and practical) code transmitter, the type popular with many beginners, will include one or more frequency-multiplication stages and one or more power-amplifier stages. Any code transmitter will obviously require a means for keying it. The bare skeleton is shown in Figs. 6-2A and B. The rf generating and amplifying sections of a double-sideband phone transmitter (a-m or fm) are similar to those of a code transmitter.

The overall design depends primarily upon the bands in which operation is desired and the power output. A simple oscillator with satisfactory frequency stability may be used as a transmitter at the lower frequencies, but the power output obtainable is small. As a general rule, the output of the oscillator is fed into one or more amplifiers to bring the power fed to the antenna up to the desired level.

An amplifier whose output frequency is the same as the input frequency is called a straight amplifier. A buffer amplifier is the term sometimes applied to an amplifier stage to indicate that its primary purpose is one of isolation, rather than power gain.

Because it becomes increasingly difficult to maintain oscillator frequency stability as the frequency is increased, it is most usual practice in working at the higher frequencies to operate the oscillator at a low frequency and follow it with one or more frequency multipliers as required to arrive at the desired output frequency. A frequency multiplier is an amplifier that delivers output at a multiple of the exciting frequency. A doubler is a multiplier that gives output at twice the exciting frequency; a tripler multiplies the exciting frequency by three, etc. From the viewpoint of any particular stage in a transmitter, the preceding stage is its driver.

As a general rule, frequency multipliers should not be used to feed the antenna system directly, but should feed a straight amplifier which, in turn, feeds the antenna system.

Good frequency stability is most easily obtained through the use of a crystal-controlled oscillator, although a different crystal is needed for each frequency desired (or multiples of that frequency). A self-controlled oscillator or VFO (variable-frequency oscillator) may be tuned to any frequency with a dial in the manner of a receiver, but requires great care in design and construction if its stability is to compare with that of a crystal oscillator.

Many transmitters use tubes, but for low-power hf and channelized vhf fm transmitters, transistors are dominant. New solid-state devices are being developed which allow dc inputs of 100 watts or more with a low-level of IM distortion products. As the cost of these transistors is reduced it can be assumed that at some point in the future tubes will be used only for high-power amplification.

The best stage or stages to key in a code transmitter is a matter which is discussed in a later chapter. The oscillator/multiplier/amplifier type of transmitter (Fig. 6-2B) has long been popular. However, the excellent frequency stability and the advantages of grid-block keying (which are explained in the Code Transmission chapter) have

Fig. 6-1 — An amateur's transmitter is his on-the-air voice. He is judged by the quality of that "voice," whatever the mode that he chooses to operate.

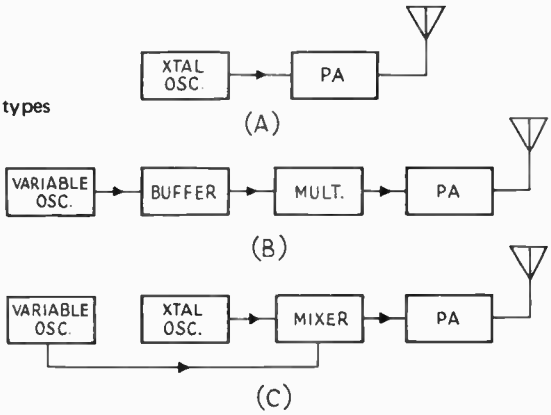

Fig. 6-2 — Block diagrams of the three basic types of transmitters.

made the heterodyne exciter of Fig. 6-2C increasingly popular, in spite of the slightly more complex circuitry required.

An fm transmitter can only be modulated in or following the oscillator stage. An a-m phone transmitter can only be modulated in the output stage, unless the modulated stage is followed by a linear amplifier. However, following an amplitude-modulated stage by a linear amplifier is an inefficient process, convenient as an expedient, but not recommended for best efficiency.

Following the generation of a single-sideband phone signal, its frequency can be changed only by frequency conversion (not multiplication), in exactly the same manner that signals in a receiver are heterodyned to a different frequency. Complete details of ssb transmitter design and construction are given in Chapter 13.

CRYSTAL OSCILLATORS

The frequency of a crystal-controlled oscillator is held constant to a high degree of accuracy by the use of a quartz crystal. The frequency depends almost entirely on the dimensions of the crystal (essentially its thickness); other circuit values have comparatively negligible effect. However, the power obtainable is limited by the heat the crystal will stand without fracturing. The amount of heating is dependent upon the rf cyrstal current which, in turn, is a function of the amount of feedback required to provide proper excitation. Crystal heating short of the danger point results in frequency drift to an extent depending upon the way the crystal is cut. Excitation should always be adjusted to the minimum necessary for proper operation.

The most stable type of crystal oscillator is that which provides only a small voltage output (lightly loaded), and which operates the crystal at a low drive level. Such oscillators are widely used in receivers and heterodyne transmitters. The oscillator/multiplier/amplifier type of transmitter usually requires some power from the oscillator stage. For either type of crystal oscillator, the active element may be a tube or a transistor.

Oscillator Circuits

The simplest crystal-oscillator circuit is shown in Fig. 6-3A. Feedback in this circuit is provided by the gate-source and drain-source capacitance. The circuit shown at B is the equivalent of the tuned-grid, tuned-plate circuit discussed in the chapter on vacuum-tube principles, using the crystal to replace the tuned grid circuit. Although JFETs are shown in the sample circuits at A and B, MOSFETs or triodes may also be employed, using the connections shown in 6-3C through F.

For applications where some power is required from the crystal oscillator, the circuits shown in

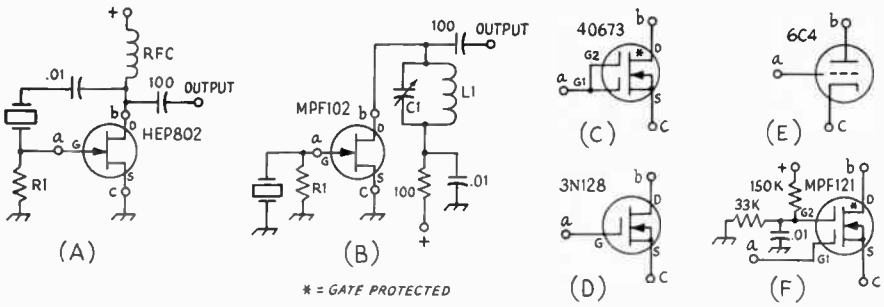

Fig. 6-3 — Simple crystal oscillator circuits. (A) Pierce, (B) FET, (C-F) other devices that can also be used in the circuits of A and B with appropriate changes in supply voltage.

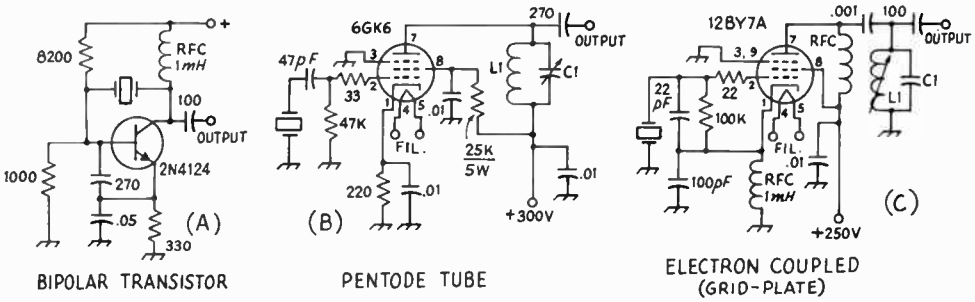

Fig. 6-4 — Crystal-oscillator circuits that are designed to deliver power. L1/C1 resonate at the crystal frequency, or a multiple thereof if the second, third, or fourth harmonic is the desired output frequency.

Fig. 6-4 may be employed. At A, a bipolar transistor is used, while the tube circuits (B, C) are somewhat more complicated. They combine the functions of oscillator and amplifier or frequency multiplier in a single tube. In these circuits, the screen of a tetrode or pentode is used as the plate in a triode oscillator. Power output is taken from a separate tuned tank circuit in the actual plate circuit. Although the oscillator itself is not entirely independent of adjustments made in the plate tank circuit when the latter is tuned near the fundamental frequency of the crystal, the effects can be satisfactorily minimized by proper choice of the oscillator tube.

The oscillators of Fig. 6-4B and 6-4C are a modification of the grid-plate circuit of Fig. 6-3B. In Fig. 6-4C the ground point has been moved from the cathode to the plate of the oscillator (in other words, to the screen of the tube). Excitation is adjusted by proper proportioning of 22- and 100-pF feedback capacitors.

When some types of tubes are used in the circuits of Fig. 6-3B, oscillation will stop when the output plate circuit is tuned to the crystal frequency, and it is necessary to operate with the plate tank circuit critically detuned for maximum output with stability. However, when the 6GK6, 12BY7A, 5763, or the lower-power 6AH6 is used with proper adjustment of excitation, it is possible to tune to the crystal frequency without stopping oscillation. These tubes also operate with less crystal current than most other types for a given power output, and less frequency change occurs when the plate circuit is tuned through the cyrstal frequency (less than 25 Hertz at 3.5 MHz).

Crystal current may be estimated by observing relative brilliance of a 60-mA dial lamp connected in series with the crystal. Current should be held to the minimum for satisfactory output by careful adjustment of excitation. With the operating voltages shown, satisfactory output should be obtained with crystal currents of 40 mA or less.

In these tube circuits, output may be obtained at multiples of the crystal frequency by tuning the plate tank circuit to the desired harmonic, the output dropping off, of course, at the higher harmonics. Especially for harmonic operation, a low-*C* plate tank circuit is desirable.

Practical Considerations

The operation of a crystal oscillator is often hampered because vhf parasitic oscillations also occur in the circuit. An effective way of killing parasitics is the use of a low-value composition resistor or ferrite bead, as shown in Fig. 6-5. The parasitic stopper can be located on the gate (grid or base) lead, and it should be placed as close as possible to the transistor. The circuit at A may be used for low-power applications. If a crystal above 1 MHz is to be used it may be advisable to include a trimmer capacitor across the crystal to allow the crystal frequency to be set exactly.

It is often desirable in fm and ssb gear to use several crystals, switch-selected in a single oscilla-

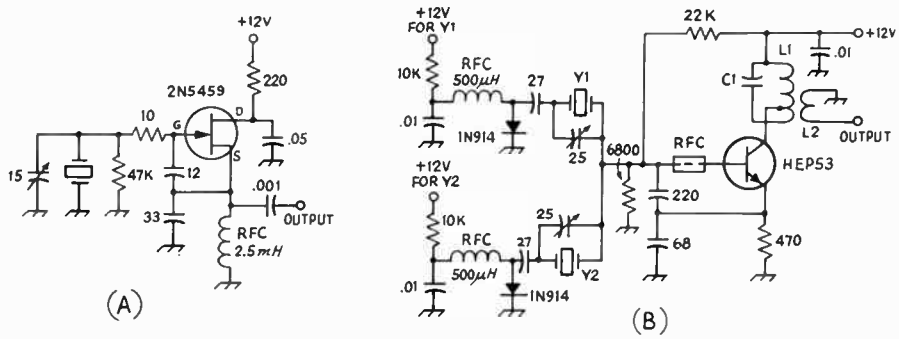

Fig. 6-5 — Two practical crystal-oscillator designs. (A) For low-power output applications such as a conversion oscillator or BFO, (B) an example of diode switching of crystals. The rf choke on the base lead of the transistor is a ferrite bead which prevents vhf parasitic oscillation.

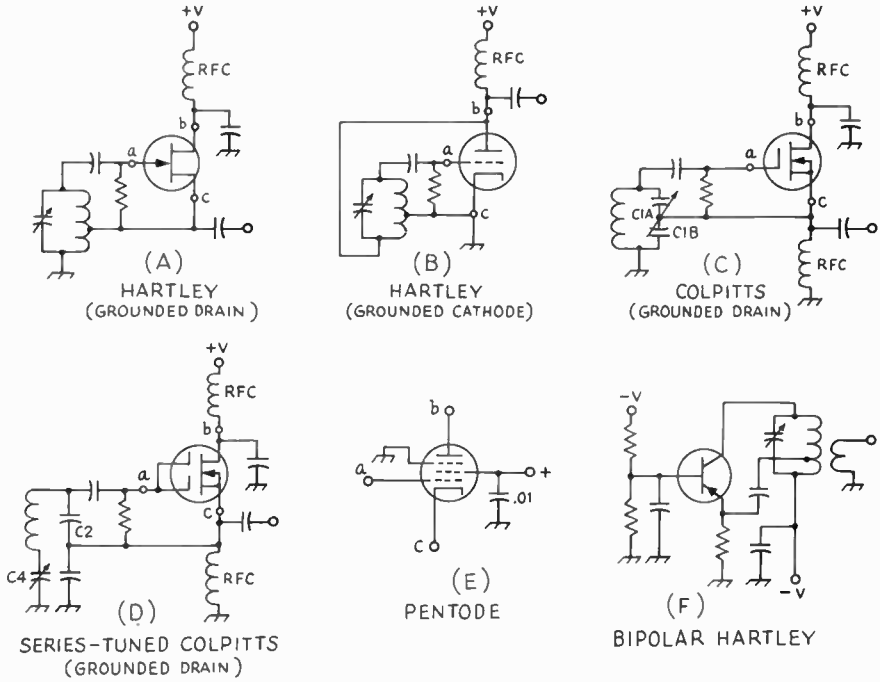

Fig. 6-6 – VFO circuits. The devices shown in Fig. 6-2C through F may also be employed as the active component.

tor. If manual switching is used, the leads to the switch may introduce sufficient additional capacitance to upset the operation of the circuit. Therefore, the use of diode switching, such as shown in Fig. 6-5B, is now popular. Any high-speed switching diode may be employed. The use of diode switching for low-level tank circuits, especially in receivers, has gained wide acceptance. A special diode known as the PIN has been developed for this purpose. In any diode-switching circuit it is important to insure that the switching bias is many times larger than the peak rf voltage present.

VARIABLE-FREQUENCY OSCILLATORS

The frequency of a VFO depends entirely on the values of inductance and capacitance in the circuit. Therefore, it is necessary to take careful steps to minimize changes in these values not under the control of the operator. As examples, even the minute changes of dimensions with temperature, particularly those of the coil, may result in a slow but noticeable change in frequency called drift. The effective input capacitance of the oscillator tube, which must be connected across the circuit, changes with variations in electrode voltages. This, in turn, causes a change in the frequency of the oscillator. To make use of the power from the oscillator, a load, usually in the form of an amplifier, must be coupled to the oscillator, and variations in the load may reflect on the frequency. Very slight mechanical movement of the components may result in a shift in frequency, and vibration can cause modulation.

In the past different techniques have been used to design the VFOs for transmitters and receivers. However, today the same circuits may be used for either application. In receivers the VFO is usually called an HFO.

VFO Circuits

Fig. 6-6 shows the most commonly used circuits. They are all designed to minimize the effects mentioned above. The oscillating circuits in Figs. 6-6A and B are the Hartley type; those in C and D are Colpitts circuits. (See chapter on vacuum-tube principles.) In the circuits of A, B and C, all of the above-mentioned effects, except changes in inductance, are minimized by the use of a high-Q tank circuit obtained through the use of large tank capacitances. Any uncontrolled changes in capacitance thus become a very small percentage of the total circuit capacitance.

In the series-tuned Colpitts circuit of Fig. 6-6D (sometimes called the Clapp circuit), a high-Q circuit is obtained in a different manner. The tube is tapped across only a small portion of the oscillating tank circuit, resulting in very loose coupling between tube and circuit. The taps are provided by a series of three capacitors across the coil. In addition, the tube capacitances are shunted by large capacitors, so the effects of the tube – changes in electrode voltages and loading – are still

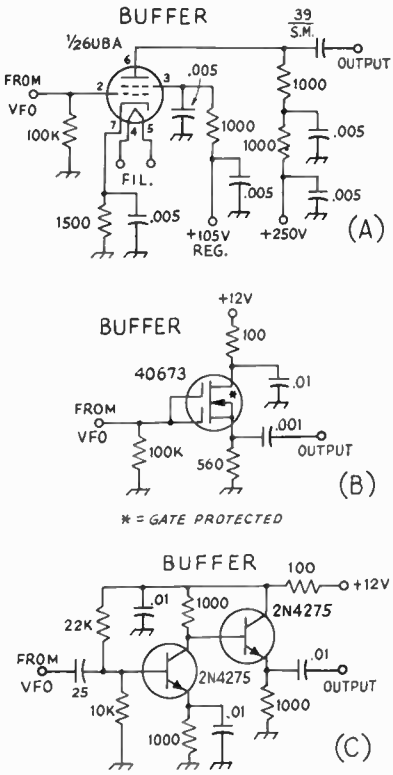

Fig. 6-7 — Isolating stages to be used between a VFO and the following amplifier or mixer stage.

further reduced. In contrast to the preceding circuits, the resulting tank circuit has a high L/C ratio and therefore the tank current is much lower than in the circuits using high-C tanks. As a result, it will usually be found that, other things being equal, drift will be less with the low-C circuit.

For best stability, the ratio of C2 or C3 (which are usually equal) to C4 should be as high as possible without stopping oscillation. The permissible ratio will be higher the higher the Q of the coil and the mutual conductance of the tube. If the circuit does not oscillate over the desired range, a coil of higher Q must be used or the capacitance of C2 and C3 reduced.

The pentode tube of 6-6E or any of the active devices shown in Fig. 6-3 may be used in either the Hartley or Colpitts circuits. Good results can be obtained with both tubes and transistors, so the choice of the active device is often a matter of personal preference.

Load Isolation

In spite of the precautions already discussed, the tuning of later stages in the transmitter may cause a noticeable change in frequency. This effect can be reduced considerably by designing a pentode oscillator for half the desired frequency and doubling frequency in the output circuit.

It is desirable, although not a strict necessity if detuning is recognized and taken into account, to approach as closely as possible the condition where the adjustment of tuning controls in the transmitter, beyond the VFO frequency control, will have negligible effect on the frequency. This can be done by adding isolating stage or stages whose tuning is fixed between the oscillator and the first tunable amplifier stage in the transmitter.

Fig. 6-7A shows such an arrangement that gives good isolation. A pentode tube is operated with a low-impedance resistive load, and regulated screen voltage. At B a simple follower circuit is used. The disadvantage of this circuit is that the level of the output will be quite low, usually less than one volt. Bipolar transistors are used in a direct-coupled follower arrangement in Fig. 6-7C, providing a higher level of output (above 3 V) than was possible with the design shown at C. The ability of a buffer stage to isolate the VFO from the load can be tested simply. Use a receiver to monitor the VFO, and listen as the buffer output is first left open and then shorted. A good buffer will hold the frequency change to less than 100 Hz. Often the frequency change may be in the order of several kHz when this test is made, an indication that the buffer is not doing its job.

Chirp, Pulling and Drift

Any oscillator will change frequency with an extreme change in plate screen voltages, and the use of stabilized sources for both is good practice. But steady source voltages cannot alter the fact of the extreme voltage changes that take place when an oscillator is keyed or heavily amplitude-modulated. Consequently some chirp or fm is the inescapable result of oscillator keying or heavy amplitude modulation.

A keyed or amplitude-modulated amplifier presents a variable load to the driving stage. If the driving stage is an oscillator, the keyed or modulated stage (the variable load) may "pull" the oscillator frequency during keying or modulation. This may cause a "chirp" on cw or incidental fm on a-m phone. In either case the cure is to provide one or more "buffer" or isolating stages between the oscillator stage and the varying load. If this is not done, the keying or modulation may be little better than when the oscillator itself is keyed or modulated.

Frequency drift is minimized by limiting the temperature excursions of the frequency-determining components to a minimum. This calls for good ventilation and a minimum of heat-generating components.

Variable capacitors should have ceramic insulation, good bearing contacts and should preferably be of the double bearing type. Fixed capacitors should have zero-temperature coefficients. The tube socket should have ceramic insulation.

Temperature Compensation

If, despite the observance of good oscillator construction practice, the warm-up drift of an oscillator is too high, it is caused by high-tempera-

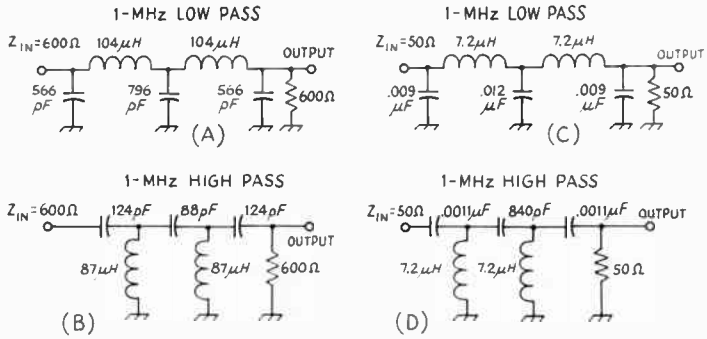

Fig. 6-8 — Universal high- and low-pass filter designs. The values given are for 1 MHz; they may be divided by the desired cutoff frequency (in MHz) to determine the value of the components needed. For example, if the 600-ohm high-pass design at A was to be used at 10 MHz, the values of C and L shown are divided by 10. The input and output impedance remains at 600 ohms.

ture operation of the oscillator. If the ventilation cannot be improved (to reduce the ultimate temperature), the frequency drift of the oscillator can be reduced by the addition of a "temperature-coefficient capacitor." These are available in negative and positive coefficients, in contrast to the zero-coefficient "NP0" types.

Most uncorrected oscillators will drift to a lower frequency as the temperature rises. Such an oscillator can be corrected (at a frequency f) by adding an N750-type capacitor (-750 parts per million per ^{0}C) of a value determined by making two sets of measurements. Measure the drift f_1 from cold to stability (e.g., 1 1/2 hours). To the cold (cooled-off) oscillator, add a *trial* N750 capacitor (e.g., 50 pF) and retune the cold oscillator to frequency f_1 (by retuning a padder capacitor or the tuning capacitor). Measure the new warm-up drift f_2 over the same period (e.g., 1 1/2 hours). The required corrective N750 capacitor is then

$$\text{Corrective } C = C_{\text{trial}} \frac{f_1}{f_1 - f_2}$$

If the trial capacitor results in a drift to a higher frequency, the denominator becomes $f_1 + f_2$.

Oscillator Coils

The Q of the tank coil used in the oscillating portion of any of the circuits under discussion should be as high as circumstances (usually space) permit, since the losses, and therefore the heating, will be less. With recommended care in regard to other factors mentioned previously, most of the drift will originate in the coil. The coil should be well spaced from shielding and other large metal surfaces, and be of a type that radiates heat well, such as a commercial air-wound type, or should be would tightly on a threaded ceramic form so that the dimensions will not change readily with temperature. The wire with which the coil is wound should be as large as practicable, especially in the high-C circuits.

Mechanical Vibration

To eliminate mechanical vibration, components should be mounted securely. The capacitor should preferably have small, thick plates and the coil braced, if necessary, to prevent the slightest mechanical movement. Wire connections between tank-circuit components should be as short as possible and flexible wire will have less tendency to vibrate than solid wire. It is advisable to cushion the entire oscillator unit by mounting on sponge rubber or other shock mounting.

Output Filtering

The output of an oscillator contains a good deal of harmonic energy in addition to the desired frequency. Often these harmonics can cause the generation of spurious products in heterodyne transmitters which result in signals being radiated outside the amateur bands. In receivers, the oscillator harmonics cause "birdies" and sprious responses in the tuning range. In general, transistor circuits generate a higher level of harmonic energy than do tube designs. Thus, the output of a tube VFO often can be used without filtering, while most solid-state VFOs require an output low-pass filter.

W7ZOI has provided general-purpose filter designs shown in Fig. 6-8. These designs have been developed using computer-aided design (CAD), where a digital computer models or "synthesizes" the circuit. Not only filters, but models of tubes, transistors and complete circuits may be developed in this way, allowing a designer to optimize a circuit without taking days of cut and try. However, the CADs are just models, and often once a circuit is built additional refinement is still required.

The filter shown in Figs. 6-8A and B are designed for 600-ohm input and output impedances, while C and D are for use in 50-ohm lines. The values shown are for 1 MHz. A design for higher frequencies may be obtained by dividing the values shown by the desired frequency. For example, if a VFO were to be used in tuning 5 to 5.5 MHz, the output filter of Fig. 6-8A might be employed with a cut-off frequency of 6 MHz. The LC values shown would be divided by 6. The result will usually be an odd number, so the closest standard value may be used.

A PRACTICAL VFO CIRCUIT

The circuit shown in Fig. 6-9 is for a solid-state VFO covering 3.5 to 4 MHz. A number of measures have been taken to prevent harmonic and spurious outputs that so often plague transistor designs. Examination of Fig. 6-9 will show that a diode, CR2, is connected between the signal gate

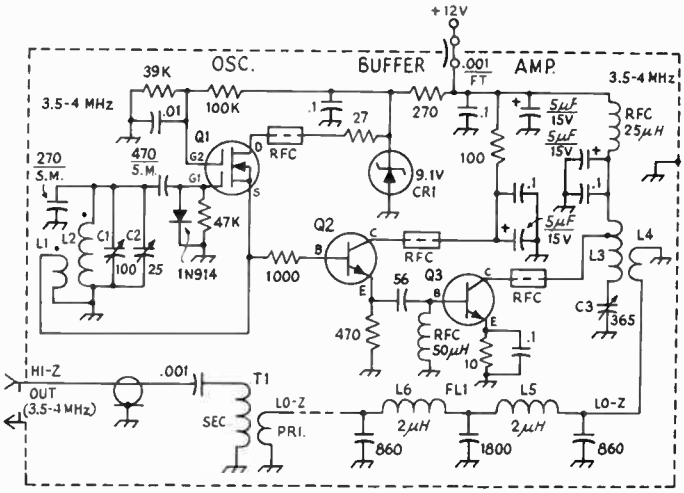

Fig. 6-9 — A typical VFO design showing extensive use of buffering and filtering to achieve a highly stable output with low spurious-frequency content.

of Q1 and ground. This diode should be designed for high-speed switching – a 1N914 is suitable – and should be connected with its anode toward gate 1. It clamps on the positive-going half of the cycle to prevent Q1 from reaching high peak transconductance, the time period when the output from the oscillator is rich in harmonic energy. This technique should be applied to any JFET or MOSFET oscillator, but does not work with bipolar-transistor oscillators. CR2 does not impair the performance of the VFO. Additional harmonics can be generated at Q2 and Q3, so attention must be given to that part of the circuit as well. Note that the collector of Q3 is tapped well down on L3. The tap provides an impedance match for the circuit, but still represents a high impedance at the harmonic frequencies, if not located too near the cold end of L3, thus contributing to a cleaner output signal. However, even though these precautions are taken, it is not uncommon to find that the second and third harmonics from a transistor output stage are only down some 10 to 15 decibels in level from the fundamental signal. By taking the VFO output at low impedance, L4, a low-pass, double-section filter can be used to diminish the harmonic to a level that is some 30 decibels or more below that of the desired output signal. FL1 is designed for 3.5 to 4-MHz use, and assures a clean output signal from the VFO.

VFO Output Level and Impedance

One of the things that perplexes many first-time users of transistorized VFOs is the matter of sufficient signal output to properly excite a transmitter input stage, or to supply adequate injection voltage to a receiver or transmitter mixer. The rms output of a solid-state VFO is limited by its low-impedance output port. In the circuits of Fig. 6-9 the output would usually be taken across the emitter resistor of Q2, the buffer. Typically, the rms output voltage at that point in the circuit will be on the order of 0.5 to 2 volts. Tube mixers can require up to several volts of oscillator signal in order to function properly. Most solid-state transmitters need from 3 to 10 volts of drive on the base of the first power stage, and a reasonable amount of driving power is needed to satisfy this requirement. Driving power is generally required by the grid of the first stage of a tube transmitter. The VFO should, therefore, be capable of supplying from 0.5 to 1 watt of power output. The Class-C amplifier, Q3, provides the needed power output. Should the driven stage present a low-impedance to the VFO, output can be taken directly from the side of FL1 opposite Q3. If, however, the driven stage of the transmitter or receiver has a high input impedance, some method must be used to provide the required impedance transformation, low to high. A broad-band toroidal step-up transformer, T1, is used for this purpose in Fig. 6-9. The secondary of the transformer is resonant somewhere in the operating range of the VFO, and takes advantage of the stray circuit capacitance, normally around 10 pF, to establish resonance. The impedance-transformation ratio is set by adjusting the number of turns on the primary winding. Alternatively, T1 can be replaced by a tuned circuit of conventional design. It can be equipped with a fixed-value capacitor and a slug-tuned inductor, or a fixed-value inductor can be used with a variable capacitor to permit peaking the output at the operating frequency. The use of a tuned circuit will assure somewhat better efficiency than will the broadband transformer, T1. Thus, it can be seen that the circuit must be tailored to the need.

Checking VFO Stability

A VFO should be checked thoroughly before it is placed in regular operation on the air. Since succeeding amplifier stages may affect the signal characteristics, final tests should be made with the complete transmitter in operation. Almost any VFO will show signals of good quality and stability when it is running free and not connected to a load. A well-isolated monitor is a necessity. Perhaps the most convenient, as well as one of the most satisfactory, well-shielded monitoring arrangements is a receiver combined with a harmonic

from a frequency standard. (See the Measurements chapter for suitable circuits.) The receiver BFO is turned off and the VFO signal is tuned to beat with the signal from the crystal oscillator instead. In this way any receiver instability caused by overloading the input circuits, which may result in "pulling" of the hf oscillator in the receiver, or by a change in line voltage to the receiver when the transmitter is keyed, will not affect the reliability of the check. Most crystals have a sufficiently low temperature coefficient to give a check on drift as well as on chirp and signal quality if they are not overloaded.

Harmonics of the crystal may be used to beat with the transmitter signal when monitoring at the higher frequencies. Since any chirp at the lower frequencies will be magnified at the higher frequencies, accurate checking can best be done by monitoring at a harmonic.

The distance between the crystal oscillator and receiver should be adjusted to give a good beat between the crystal oscillator and the transmitter signal. When using harmonics of the crystal oscillator, it may be necessary to attach a piece of wire to the oscillator as an antenna to give sufficient signal in the receiver. Checks may show that the stability is sufficiently good to permit oscillator keying at the lower frequencies, where break-in operation is of greater value, but that chirp becomes objectionable at the higher frequencies. If further improvement does not seem possible, it would be logical in this case to use oscillator keying at the lower frequencies and amplifier keying at the higher frequencies.

Premixing

It is difficult to build a variable-frequency oscillator for operation above 10 MHz with drift of only a few Hz. A scheme called premixing, shown in Fig. 6-10A, may be used to obtain VFO output in the 10- to 50-MHz range. The output of a highly stable VFO is mixed with energy from a crystal-controlled oscillator. The frequencies of the two oscillators are chosen so that spurious outputs generated during the mixing process do not fall within the desired output range. A bandpass filter at the mixer output attenuates any out-of-band spurious energy. The charts given in Chapter 8 can be used to choose oscillator combinations which will have a minimum of spurious outputs. Also, Chapter 8 contains a discussion of mixer-circuit design.

PLL

Receivers and transmitters of advanced design are now using phase-locked loops (PLLs) to generate highly stable local oscillator energy up into the microwave region. The PLL has the advantage that no mixing stage is used in conjunction with the output oscillator, so the output energy is quite "clean." The Galaxy R-530, the Collins 651S-1, and the National HRO-600 currently use PLL high-frequency oscillator systems.

The basic diagram of a PLL is shown in Fig. 6-10B. Output from a voltage-controlled oscillator

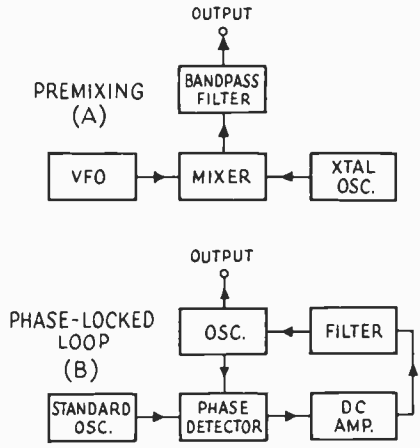

Fig. 6-10 — Block diagrams of the (A) premixing and (B) phase-lock-loop schemes.

(VCO) and a frequency standard are fed to a phase detector which produces an output voltage equal to the difference in frequency between the two signals. The *error* voltage is amplified, filtered, and applied to the VCO. The error voltage changes the frequency of the VCO until it is locked to the standard. The bandwidth of the error-voltage filter determines the frequency range over which the system will remain in phase lock.

Three types of phase-locked loops are now in use. The simplest type uses harmonics of a crystal standard to phase-lock an HFO, providing the injection for the first mixer in a double-conversion receiver. A typical circuit is given in Fig. 6-11. Complete construction details on this PLL were given in *QST* for January, 1972. A second type of phase-locked loop uses a stable mf VFO as the standard which stabilizes the frequency of an hf or vhf VCO. This approach is used in the receiver described by Fischer in *QST*, March, 1970.

The other PLL system also uses a crystal-controlled standard, but with programmable frequency dividers included so that the VCO output is always locked to a crystal reference. The frequency is changed by modifying the instructions to the dividers; steps of 100 Hz are usually employed for hf receivers while 10-kHz increments are popular in vhf gear. The use of a PLL for fm demodulation is covered separately in Chapter 14.

VFO DIALS

One of the tasks facing an amateur builder is the difficulty of finding a suitable dial and drive assembly for a VFO. A dial should provide a sufficiently slow rate of tuning — 10- to 25-kHz per knob revolution is considered optimum — without backlash. Planetary drives are popular because of their low cost; however, they often develop objectional backlash after a short period of use. Several types of two-speed drives are available. They are well suited to homemade amateur

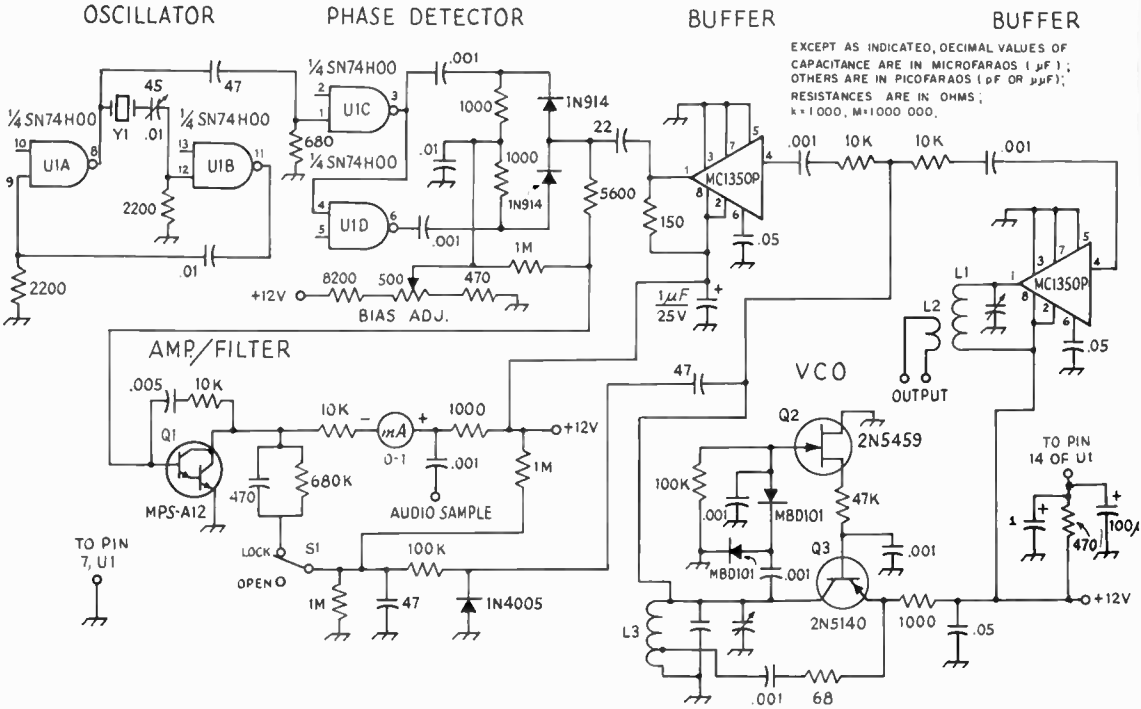

Fig. 6-11 — A practical phase-locked oscillator intended for application as the crystal-controlled HFO in a transmitter or receiver. The crystal frequency should be chosen so that the harmonic content of the standard is sufficient at the desired output frequency. A 200-kHz crystal is good to 40 MHz, 500-kHz crystal to 60 MHz, and 1-MHz crystal to 80 MHz. L1 and L3 are chosen to resonate at the desired output frequency.

equipment. Several of the construction projects described elsewhere in this book employ this type of dial. The Eddystone 898 precision dial has long been a favorite with amateurs, although the need to elevate the VFO far above the chassis introduces some mechanical-stability problems. If a permeability tuned oscillator (PTO) is used, one of the many types of turn counters made for vacuum variable capacitors or rotary inductors may be employed.

Linear Readout

If linear-frequency readout is desired on the dial, the variable capacitor must be only a small portion of the total capacitance in the oscillator tank. Capacitors tend to be very nonlinear near the ends of rotation. A gear drive providing a 1.5:1 reduction should be employed so that only the center of the capacitor range is used. Then, as a final adjustment, the plates of the capacitor must be filed until linear readout is achieved. In a PTO, the pitch of the oscillator coil winding may be varied so that linear frequency change results from the travel of the tuning slug. Such a VFO was described in *QST* for July, 1964. A different approach was employed by Lee (*QST*, November, 1970), using a variable-capacitance diode (Varicap) as the VFO tuning element. A meter which reads the voltage applied to the Varicap was calibrated to indicate the VFO frequency.

Fig. 6-12 — A 5-digit readout using light-emitting diodes.

Electronic Dials

An electronic dial consists of a simplified frequency counter which reads either the VFO or operating frequency of a transmitter or receiver. The advantage of an electronic dial is the excellent accuracy (to one Hertz, if desired) and the fact that VFO tuning does not have to be linear. The readout section of the dial may use neon-glow tubes called Nixies (a trade name of the Burroughs Corp.), or a seven-segment display using incandescent lamps, filament wires in a vacuum tube, or LEDs (light-emitting diodes). A typical LED display is shown in Fig. 6-12. The use of MSI and LSI circuits, some containing as many as 200 transistors on a single chip, reduces the size required for an electronic dial to a few square inches of circuit-board space.

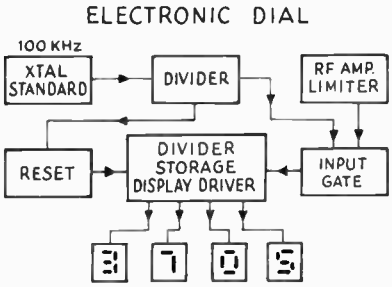

Fig. 6-13 — Block diagram of a frequency counter.

A typical counter circuit is given in Fig. 6-13. The accuracy of the counter is determined by a crystal standard which is often referred to as a clock. The output from a 100-kHz calibration oscillator, the type often used in receivers and transceivers, may be employed if accuracy of 100 Hz is sufficient. For readout down to 1 Hz, a 1- to 10-MHz AT-cut crystal should be chosen, because this type of high-accuracy crystal exhibits the best temperature stability. The clock output energy is divided in decade-counter ICs to provide the pulse which opens the input gate of the counter for a preset time. The number of rf cycles which pass through the gate while it is open are counted and stored. Storage is used so that the readout does not blink. At the end of each counting cycle the information that has been stored activates the display LEDs, which present the numbers counted until another count cycle is complete. A complete electronic dial arranged to be combined with an existing transmitter or receiver was described in *QST* for November 1970. Also, Macleish *et al* reported an adapter which allows a commercially made frequency counter to be mated with ham gear so that the counter performs as an electronic dial (*QST*, May, 1971).

FREQUENCY MULTIPLIERS

Single-Tube Multiplier

Output at a multiple of the frequency at which it is being driven may be obtained from an amplifier stage if the output circuit is tuned to a harmonic of the exciting frequency instead of to the fundamental. Thus, when the frequency at the grid is 3.5 MHz, output at 7 MHz, 10.5 MHz, 14 MHz, etc., may be obtained by tuning the plate tank circuit to one of these frequencies. The circuit otherwise remains the same as that for a straight amplifier, although some of the values and operating conditions may require change for maximum multiplier efficiency.

A practical limit to efficiency and output within normal tube ratings is reached when the multiplier is operated at maximum permissible plate voltage and maximum permissible grid current. The plate current should be reduced as necessary to limit the dissipation to the rated value by increasing the bias and decreasing the loading.

Multiplications of four or five sometimes are used to reach the bands above 28 MHz from a lower-frequency crystal, but in the majority of lower-frequency transmitters, multiplication in a single stage is limited to a factor of two or three. Screen-grid tubes make the best multipliers because their high power-sensitivity makes them easier to drive properly than triodes.

Since the input and output circuits are not tuned close to the same frequency, neutralization usually will not be required. Instances may be encountered with tubes of high transconductance, however, when a doubler will oscillate in t.g.t.p. fashion.

Frequency multipliers using tubes are operated Class C, with the bias and drive levels adjusted for plate-current conduction of less than 180 degrees.

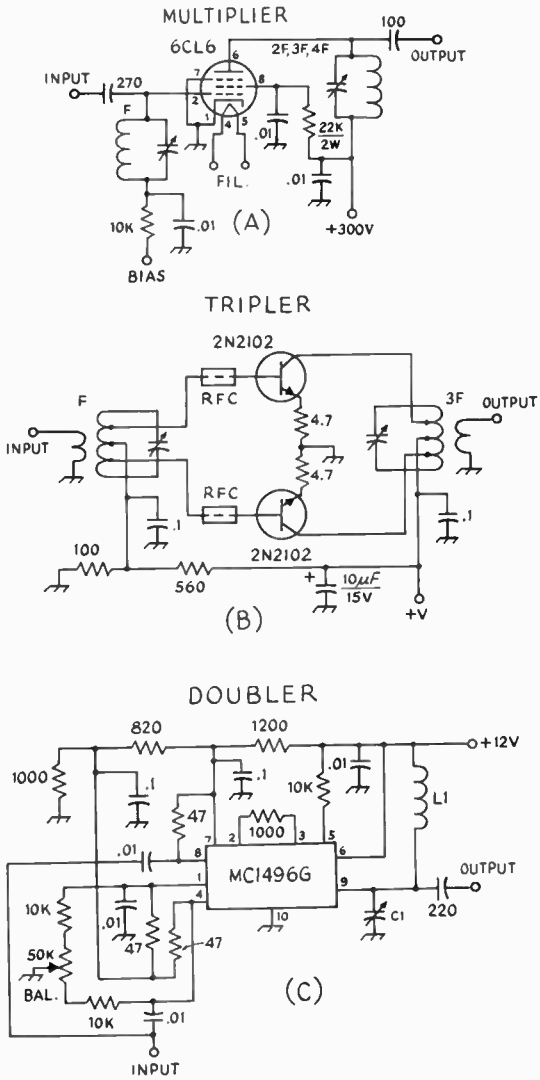

Fig. 6-14 — Frequency-multiplier circuits.

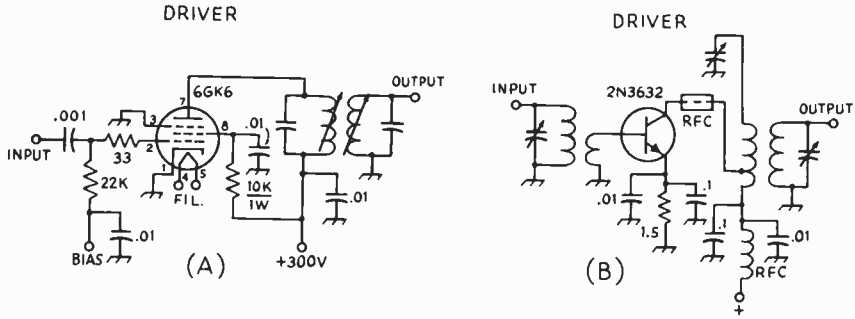

Fig. 6-15 — Driver stages using (A) a pentode tube and (B) a bipolar power transistor.

For maximum efficiency, a doubler requires a plate-conduction angle of about 110 degrees, while a tripler needs 100 degrees, a quadrupler 80 degrees, and a quintupler 65 degrees. For higher orders of multiplication increased bias and more drive are needed.

A typical circuit using a 6CL6 pentode tube is shown in Fig. 6-14A. The input circuit is tuned to the driving frequency while the output tank is set for the desired harmonic. If such a multiplier were to be operated directly into an antenna, additional selectivity would be necessary to prevent the radiation of harmonic energy (other than the desired frequency).

Push-Push Multipliers

A two-tube circuit which works well at even harmonics, but not at the fundamental or odd harmonics, is known as the push-push circuit. The grids are connected in push-pull while the plates are connected in parallel. The efficiency of a doubler using this circuit approaches that of a straight amplifier.

This arrangement has an advantage in some applications. If the heater of one tube is turned off, its grid-plate capacitance, being the same as that of the remaining tube, serves to neutralize the circuit. Thus provision is made for either straight amplification at the fundamental with a single tube, or doubling frequency with two tubes.

Push-Pull Multiplier

A single- or parallel-tube multiplier will deliver output at either even or odd multiplies of the exciting frequency. A push-pull stage does not work as a doubler or quadrupler but it will work as a tripler.

Transistor Multipliers

A transistor develops harmonic energy with good efficiency, often causing harmonic-output problems in straight-through amplifiers. Two harmonic-generating modes are present, parametric multiplication and multiplication caused by the nonlinear characteristic presented by the base-collector junction. Transistors may be used in single-ended, push-pull, or push-push circuits. A typical push-pull tripler is shown in Fig. 6-14B. A small amount of forward bias has been added to the bases of the 2N2102s to reduce the amount of drive required. If a high level of drive is available, the bias circuit may be omitted.

A number of integrated circuits can be employed as frequency multipliers. The circuit at C uses a Motorola MC1496G (or the Signetics S5596, or Fairchild μA796) as a doubler. The input signal is balanced out in the IC, so only the desired second harmonic of the input frequency appears at the output. With suitable bypass capacitors this doubler can be used from audio to vhf.

DRIVERS

Pentode tubes are usually chosen for the driver stages of tube transmitters because they provide high amplification, often without requiring neutralization. Many of the receiving-type pentodes and smaller TV sweep tubes may be employed. The 6CL6, 6GK6, 12BY7A, 6BA6, 6AU6, and 6DC6 are often chosen. In cw and fm service the driver stage is operated Class C, while for ssb operation the Class-A mode is preferred to keep distortion to a minimum (third-order products at least 50 dB down). In ssb exciters alc voltage is often applied to a driver stage, in which case a semiremote-cutoff tube is desirable. Sharp-cutoff types are not acceptable because of a rapid increase in distortion as alc voltage drives the grid increasingly negative.

A typical tube driver stage is shown in Fig. 6-15 at A. The output load is a parallel-resonant circuit. Often a bandpass network is used so that the stage does not have to be tuned by a panel control. Also, coupling with a bandpass transformer provides a higher order of attenuation of harmonic and spurious signals. At Fig. 6-15B, a 2N3632 medium-power transistor serves as a Class-C driver. Note that this circuit is not suitable for ssb service.

Broadband Driver

Transistor circuits often require complex interstage coupling networks, because of the low input and output impedance characteristics of bipolar devices. Designing a solid-state multiband hf transmitter often requires some very complex band-switch arrangements. To eliminate this problem, the current trend is to use a broadband multistage driver that covers 3.5 to 30 MHz, for example, without switching or tuning adjustments. A typical circuit, similar to that used in Signal/One's CX-7 transceiver, is shown in Fig.

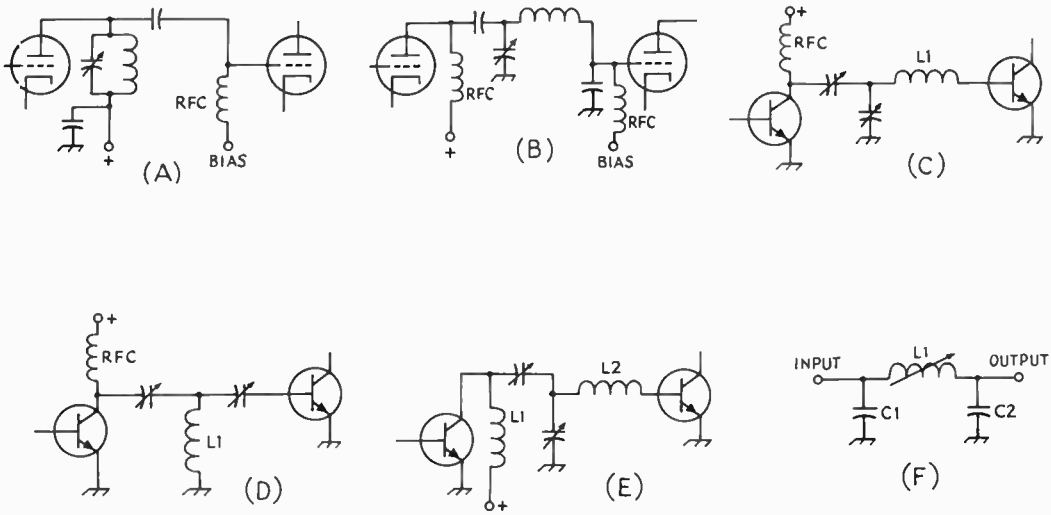

Fig. 6-16 — Interstage coupling networks for (A, B) tubes, (C-E) transistor stages, and (F) a grounded-grid amplifier.

6-17. Only a few millivolts of ssb or cw drive will provide sufficient output to drive a 4CX250B operating Class AB_1. Interstage coupling is accomplished with broadband toroidal transformers. Feedback is added from the collector to the emitter of each bipolar-transistor stage to improve linearity. Output impedance of the broadband driver is approximately 390 ohms.

Interstage Coupling

To achieve the maximum transfer of power between the driver and the succeeding amplifier stage, the output impedance of the driver must be matched to the input impedance of the following amplifier. Some form of rf coupling or impedance-matching network is needed. The capacitive system of Fig. 6-16A is the simplest of all coupling systems. In this circuit, the plate tank circuit of the driver, C1L1, serves also as the grid tank of the amplifier. Although it is used more frequently than any other system, it is less flexible and has certain limitations that must be taken into consideration.

The two stages cannot be separated physically any appreciable distance without involving loss in transferred power, radiation from the coupling lead and the danger of feedback from this lead. Since both the output capacitance of the driver tube and the input capacitance of the amplifier are across the single circuit, it is sometimes difficult to obtain a tank circuit with a sufficiently low Q to provide an efficient circuit at the higher frequencies. The coupling can be varied by altering the capacitance of the coupling capacitor, C2. The driver load impedance is the sum of the amplifier grid resistance and the reactance of the coupling capacitor in series, the coupling capacitor serving simply as a series reactor. The driver load resistance increases with a decrease in the capacitance of the coupling capacitor.

When the amplifier grid impedance is lower than the optimum load resistance for the driver, a transforming action is possible by tapping the grid down on the tank coil, but this is not recommended because it invariably causes an increase in vhf harmonics and sometimes sets up a parasitic circuit.

So far as coupling is concerned, the Q of the circuit is of little significance. However, the other considerations discussed earlier in connection with tank-circuit Q should be observed.

Pi-Network Interstage Coupling

A pi-section tank circuit, as shown in Fig. 6-16B, may be used as a coupling device between screen-grid amplifier stages. The circuit can also be considered a coupling arrangement with the grid of the amplifier tapped down on the circuit by means of a capacitive divider. In contrast to the tapped-coil method mentioned previously, this system will be very effective in reducing vhf harmonics, because the output capacitor provides a direct capacitive shunt for harmonics across the amplifier grid circuit.

To be most effective in reducing vhf harmonics, the output capacitor should be a mica capacitor connected directly across the tube-socket terminals. Tapping down on the circuit in this manner also helps to stabilize the amplifier. Since the coupling to the grid is comparatively loose under any condition, it may be found that it is impossible to utilize the full power capability of the driver stage. If sufficient excitation cannot be obtained, it may be necessary to raise the plate voltage of the

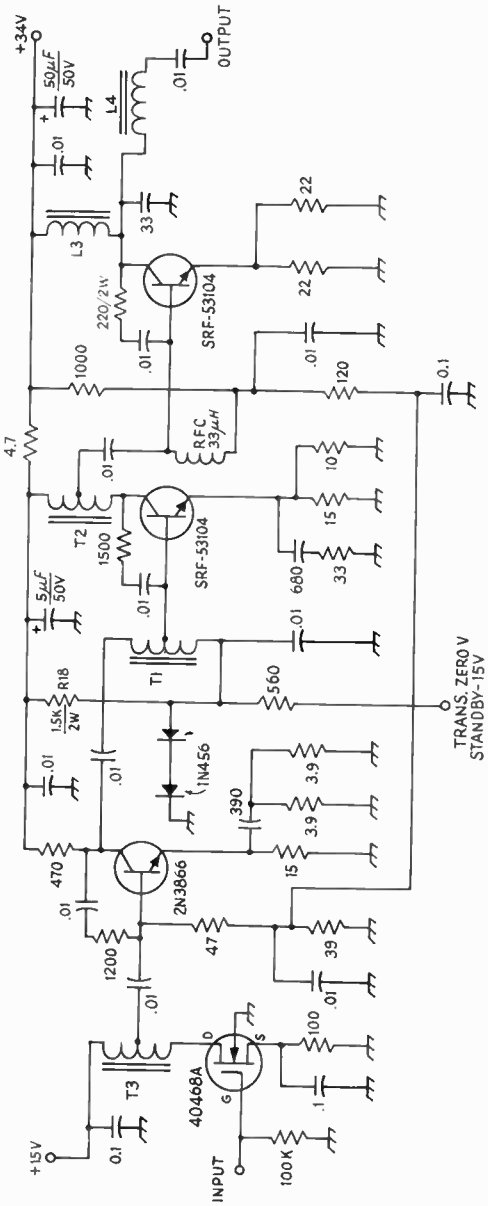

Fig. 6-17 — A solid-state broadband driver for 3 to 30 MHz. The design of transformers T1, T2 and T3 is covered later in the chapter.

driver, if this is permissible. Otherwise a larger driver tube may be required. As shown in Fig. 6-16B, parallel driver plate feed and amplifier grid feed are necessary.

Coupling Transistor Stages

In stages using bipolar power transistors, the input circuit must provide a match between the driver collector and the PA base. The latter exhibits a very low impedance. The input impedance of an rf power transistor is between several tenths of an ohm and several ohms. Generally, the higher the power rating of the device, the lower the input impedance. The base connection also has a reactive component which is capacitive at low frequencies and inductive at higher frequencies. At some frequency, usually between 50 and 150 MHz, the base lead will be self-resonant. The input impedance will vary with drive level, which makes a cut-and-try adjustment of the interstage network necessary.

An interstage network must provide the proper impedance transformation while tuning out reactance in the transistors. The reactive components of the base and collectors of power transistors are of such magnitude that they must be included in any network calculations. Fig. 6-16 shows several networks capable of interstage matching in a multistage transistor amplifier. At C, a T network is pictured. The value of the inductor is chosen so that its reactance is much greater than the capacitive reactance of the second transistor's base circuit. The capacitive divider provides the impedance match between the collector and the base.

The circuit of 6-16D is also basically a T network in which both the inductor and second capacitor are chosen to have reactance of a greater magnitude than the base-emitter capacitance of the second transistor. The circuits of C and D require that the collector of the driver transistor be shunt fed through a high-impedance rf choke. Fig. 6-16E shows a coupling network that eliminates the need for a choke. Here the collector of the driver transistor is parallel-tuned and the base-emitter junction of the following stage is series-tuned.

The remaining circuit, Fig. 6-16F, shows the pi-section network that is often used to match the 50-ohm output of an exciter to a grounded-grid power amplifier. A Q of 1 or 2 is chosen so that the circuit will be broad enough to operate across an amateur band without retuning. The network is designed for a 50-ohm input impedance and to match an output load of 30 to 150 ohms (the impedance range of the cathode of typical grounded-grid stages). Typical LC values are given in the construction projects presented later in this chapter.

RF POWER AMPLIFIER CIRCUITRY

Tube Operating Conditions

In addition to proper tank and output-coupling circuits, an rf amplifier must be provided with suitable operating voltages and an rf driving or excitation voltage. All rf amplifier tubes require a voltage to operate the filament or heater (ac is usually permissible), and a positive dc voltage between the plate and filament or cathode (plate voltage). Most tubes also require a negative dc voltage (biasing voltage) between control grid (grid No. 1) and filament or cathode. Screen-grid tubes require in addition a positive voltage (screen voltage or grid No. 2 voltage) between screen and filament or cathode.

Biasing and plate voltages may be fed to the

tube either in series with or in parallel with the associated rf tank circuit as discussed in the chapter on electrical laws and circuits.

It is important to remember that true plate, screen or biasing voltage is the voltage between the particular electrode and filament or cathode. Only when the cathode is directly grounded to the chassis may the electrode-to-chassis voltage be taken as the true voltage. The required rf driving voltage is applied between grid and cathode.

Power Input and Plate Dissipation

Plate power input is the dc power input to the plate circuit (dc plate voltage X dc plate current). Screen power input likewise is the dc screen voltage X the dc screen current.

Plate dissipation is the difference between the rf power delivered by the tube to its loaded plate tank circuit and the dc plate power input. The screen, on the other hand, does not deliver any output power, and therefore its dissipation is the same as the screen power input.

TRANSMITTING-TUBE RATINGS

Tube manufacturers specify the maximum values that should be applied to the tubes they produce. They also publish sets of typical operating values that should result in good efficiency and normal tube life.

Maximum values for all of the most popular transmitting tubes will be found in the tables of transmitting tubes in the last chapter. Also included are as many sets of typical operating values as space permits. However, it is recommended that the amateur secure a transmitting-tube manual from the manufacturer of the tube or tubes he plans to use.

CCS and ICAS Ratings

The same transmitting tube may have different ratings depending upon the manner in which the tube is to be operated, and the service in which it is to be used. These different ratings are based primarily upon the heat that the tube can safely dissipate. Some types of operation, such as with grid or screen modulation, are less efficient than others, meaning that the tube must dissipate more heat. Other types of operation, such as cw or single-sideband phone are intermittent in nature, resulting in less average heating than in other modes where there is a continuous power input to the tube during transmissions. There are also different ratings for tubes used in transmitters that are in almost constant use (CCS – Continuous Commercial Service), and for tubes that are to be used in transmitters that average only a few hours of daily operation (ICAS – Intermittent Commercial and Amateur Service). The latter are the ratings used by amateurs who wish to obtain maximum output with reasonable tube life.

Maximum Ratings

Maximum ratings, where they differ from the values given under typical operating values, are not normally of significance to the amateur except in special applications. No single maximum value should be used unless all other ratings can simultaneously be held within the maximum values. As an example, a tube may have a maximum plate-voltage rating of 2000, a maximum plate-current rating of 300 mA, and a maximum plate-power-input rating of 400 watts. Therefore, if the maximum plate voltage of 2000 is used, the plate current should be limited to 200 mA (instead of 300 mA) to stay within the maximum power-input rating of 400 watts.

SOURCES OF TUBE ELECTRODE VOLTAGES

Filament or Heater Voltage

The heater voltage for the indirectly heated cathode-type tubes found in low-power classifications may vary 10 percent above or below rating without seriously reducing the life of the tube. But the voltage of the higher-power filament-type tubes should be held closely between the rated voltage as a minimum and 5 percent above rating as a maximum. Make sure that the plate power drawn from the power line does not cause a drop in filament voltage below the proper value when plate power is applied.

Thoriated-type filaments lose emission when the tube is overloaded appreciably. If the overload

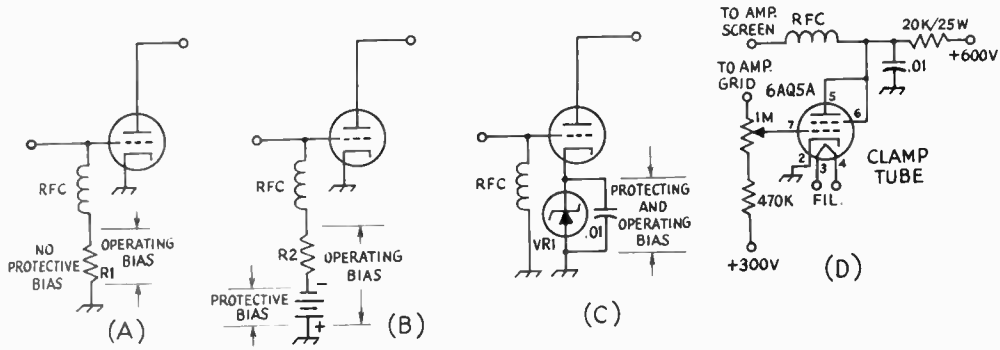

Fig. 6-18 – (A-C) Various systems for obtaining protective and operating bias. (D) Screen clamper circuit for protecting power tetrodes.

has not been too prolonged, emission sometimes may be restored by operating the filament at rated voltage with all other voltages removed for a period of 10 minutes, or at 20 percent above rated voltage for a few minutes.

Plate Voltage

Dc plate voltage for the operation of rf amplifiers is most often obtained from a transformer-rectifier-filter system (see power-supply chapter) designed to deliver the required plate voltage at the required current. However, batteries or other dc-generating devices are sometimes used in certain types of operation (see portable-mobile chapter).

Bias and Tube Protection

Several methods of obtaining bias are shown in Fig. 6-18. At A, bias is obtained by the voltage drop across a resistor in the grid dc return circuit when rectified grid current flows. The proper value of resistance may be determined by dividing the required biasing voltage by the dc grid current at which the tube will be operated. Then, so long as the rf driving voltage is adjusted so that the dc grid current is the recommended value, the biasing voltage will be the proper value. The tube is biased only when excitation is applied, since the voltage drop across the resistor depends upon grid-current flow. When excitation is removed, the bias falls to zero. At zero bias most tubes draw power far in excess of the plate-dissipation rating. So it is advisable to make provision for protecting the tube when excitation fails by accident, or by intent as it does when a preceding stage in a cw transmitter is keyed.

If the maximum cw ratings shown in the tube tables are to be used, the input should be cut to zero when the key is open. Aside from this, it is not necessary that plate current be cut off completely but only to the point where the rated dissipation is not exceeded. In this case plate-modulated phone ratings should be used for cw operation, however.

With triodes this protection can be supplied by obtaining all bias from a source of fixed voltage, as shown in Fig. 6-18B. It is preferable, however, to use only sufficient fixed bias to protect the tube and obtain the balance needed for operating bias from a grid leak. The grid-leak resistance is calculated as above, except that the fixed voltage is subtracted first.

Fixed bias may be obtained from dry batteries or from a power pack (see power-supply chapter). If dry batteries are used, they should be checked periodically, since even though they may show normal voltage, they eventually develop a high internal resistance.

In Fig. 16-8D, bias is obtained from the voltage drop across a Zener diode in the cathode (or filament center-tap) lead. Protective bias is obtained by the voltage drop across VR1 as a result of plate (and screen) current flow. Since plate current must flow to obtain a voltage drop across the resistor, it is obvious that cutoff protective bias cannot be obtained.

The voltage of the cathode biasing Zener diode VR1 should be chosen for the value which will give the correct operating bias voltage with rated grid, plate and screen currents flowing with the amplifier loaded to rated input. When excitation is removed, the input to most types of tubes will fall to a value that will prevent damage to the tube, at least for the period of time required to remove plate voltage. A disadvantage of this biasing system is that the cathode rf connection to ground depends upon a bypass capacitor.

Screen Voltage

For cw and fm operation, and under certain conditions of phone operation (see amplitude-modulation chapter), the screen may be operated from a power supply of the same type used for plate supply, except that voltage and current ratings should be appropriate for screen requirements. The screen may also be operated through a series resistor or voltage-divider from a source of higher voltage, such as the plate-voltage supply, thus making a separate supply for the screen unnecessary. Certain precautions are necessary, depending upon the method used.

It should be kept in mind that screen current varies widely with both excitation and loading. If the screen is operated from a fixed-voltage source, the tube should never be operated without plate voltage and load, otherwise the screen may be damaged within a short time. Supplying the screen through a series dropping resistor from a higher-voltage source, such as the plate supply, affords a measure of protection, since the resistor causes the screen voltage to drop as the current increases, thereby limiting the power drawn by the screen. However, with a resistor, the screen voltage may vary considerably with excitation, making it necessary to check the voltage at the screen terminal under actual operating conditions to make sure that the screen voltage is normal. Reducing excitation will cause the screen current to drop, increasing the voltage; increasing excitation will have the opposite effect. These changes are in addition to those caused by changes in bias and plate loading, so if a screen-grid tube is operated from a series resistor or a voltage divider, its voltage should be checked as one of the final adjustments after excitation and loading have been set.

An approximate value for the screen-voltage dropping resistor may be obtained by dividing the voltage *drop* required from the supply voltage (difference between the supply voltage and rated screen voltage) by the rated screen current in decimal parts of an ampere. Some further adjustment may be necessary, as mentioned above, so an adjustable resistor with a total resistance above that calculated should be provided.

Protecting Screen-Grid Tubes

Considerably less grid bias is required to cut off an amplifier that has a fixed-voltage screen supply than one that derives the screen voltage through a high value of dropping resistor. When a "stiff" screen voltage supply is used, the necessary grid

cutoff voltage may be determined from an inspection of the tube curves or by experiment.

When the screen is supplied from a series dropping resistor, the tube can be protected by the use of a clamper tube, as shown in Fig. 6-18D. The grid-leak bias of the amplifier tube with excitation is supplied also to the grid of the clamper tube. This is usually sufficient to cut off the clamper tube. However, when excitation is removed, the clamper-tube bias falls to zero and it draws enough current through the screen dropping resistor usually to limit the input to the amplifier to a safe value. If complete screen-voltage cutoff is desired, a Zener diode may be inserted in the screen lead. The regulator diode voltage rating should be high enough so that it will cease conducting when excitation is removed.

Feeding Excitation to the Grid

The required rf driving voltage is supplied by an oscillator generating a voltage at the desired frequency, either directly or through intermediate amplifiers, mixers, or frequency multipliers.

As explained in the chapter on vacuum-tube fundamentals, the grid of an amplifier operating under Class C conditions must have an exciting voltage whose peak value exceeds the negative biasing voltage over a portion of the excitation cycle. During this portion of the cycle, current will flow in the grid-cathode circuit as it does in a diode circuit when the plate of the diode is positive in respect to the cathode. This requires that the rf driver supply power. The power required to develop the required peak driving voltage across the grid-cathode impedance of the amplifier is the rf driving power.

The tube tables give approximate figures for the grid driving power required for each tube under various operating conditions. These figures, however, do not include circuit losses. In general, the driver stage for any Class C amplifier should be capable of supplying at least three times the driving power shown for typical operating conditions at frequencies up to 30 MHz and from three to ten times at higher frequencies.

Since the dc grid current relative to the biasing voltage is related to the peak driving voltage, the dc grid current is commonly used as a convenient indicator of driving conditions. A driver adjustment that results in rated dc grid current when the dc bias is at its rated value, indicates proper excitation to the amplifier when it is fully loaded.

In coupling the grid input circuit of an amplifier to the output circuit of a driving stage the objective is to load the driver plate circuit so that the desired amplifier grid excitation is obtained without exceeding the plate-input ratings of the driver tube.

Driving Impedance

The grid-current flow that results when the grid is driven positive in respect to the cathode over a portion of the excitation cycle represents an average resistance across which the exciting voltage must be developed by the driver. In other words, this is the load resistance into which the driver plate circuit must be coupled. The approximate grid input resistance is given by:

$$\textit{Input impedance}\ (\text{ohms}) = \frac{\textit{driving power (watts)}}{\textit{dc grid current}\ (\text{mA})^2} \times 620{,}000$$

For normal operation, the driving power and grid current may be taken from the tube tables. Since the grid input resistance is a matter of a few thousand ohms, an impedance step-down is necessary if the grid is to be fed from a low-impedance transmission line.

TRANSISTOR RATINGS

Transistor ratings are similar in some respects to the maximum limits given for tubes. However, solid-state devices are generally not so forgiving of overload; they can quickly be ruined if a voltage or current parameter of the device is exceeded. All semiconductors undergo irreversible changes if their temperature is allowed to go above a critical limit.

Voltage Rating

In general, the higher the collector-emitter voltage rating of a transistor the less the chance of damage when used as an rf power amplifier. A mismatched load, or the loss of the load entirely, causes high voltages to appear between the collector and emitter of the transistor. If the maximum rating is exceeded, the transistor may break down and pass reverse current. Transistor manufacturers are now including a resistance in series with the emitter lead of each of the many junctions that make up the power transistor as break-down protection. This technique is called ballasting or balanced emitters. Another way to protect a power transistor is to include a Zener diode from collector to emitter. The break-down voltage rating of the diode should be above the peak rf voltage to be developed in the circuit, but below the maximum rating of the power device.

Current and Heat

The current that a power device can stand is related to its ability to dissipate heat. A transistor is physically small, so high-power models must use effective heat radiators, called heat sinks, to insure that the operating temperature is kept to a moderate value even when large currents are flowing through the device.

Cooling considerations for practical solid-state amplifiers are outlined below. Manufacturer's specification sheets describe a safe operating area for an individual power transistor. Also, transistors are rated in terms of power output, rather than input, so it should be remembered that a device specified to deliver 80 watts of output power will probably be running 160 watts or more input. Transistor amplifiers pass an appreciable amount of driver power to the output, as do grounded-grid tube stages, and this fact must also be taken into account by the circuit designer.

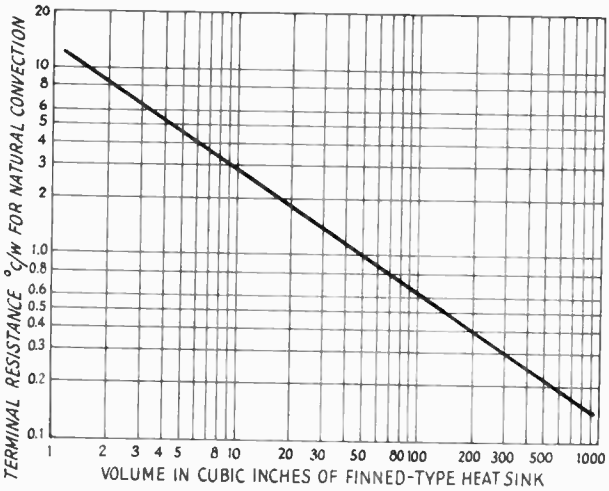

(A)

Device Case	*5W*	*10W*	*25W*	*50W*	*100W*
TO-5	17.2	7.2	1.2	.71	.35
TO-44	1.2	9.2	.44	n/a	n/a

(B)

Fig. 6-19 – (A) Graph to determine the thermal resistance of a heat sink of a given size. The heat sink volume may be computed by multiplying cross-sectional area by height. (B) Approximate thermal resistance needed for proper cooling of two types of transistor cases when operated at the proper levels given.

COOLING

Tubes

Vacuum tubes must be operated within the temperature range specified by the manufacturer if long tube life is to be achieved. Tubes with glass envelopes rated at up to 25 watts of plate dissipation may be run without forced-air cooling, if a moderate amount of cooling by convection can be arranged. If a cane-metal enclosure is used, and a ring of 1/4-inch diameter holes are placed around the tube socket, normal air flow can be relied upon to remove excess heat at room temperatures.

For tubes with greater plate dissipation, or those operated with plate currents in excess of the manufacturer's ratings (often the case with TV sweep tubes) forced air cooling with a fan or blower is needed. Fans, especially those designed for cooling hi-fi cabinets, are preferred because they operate quietly. However, all fans lose their ability to move air when excessive back pressure exists. For applications where a stream of air must be directed through a tube socket, a blower is usually required. Blowers vary in their ability to work against back pressure, so this specification should be checked when selecting a particular model. Some air will always leak around the socket and through other holes in a chassis, so the blower chosen should have a capacity which is 30 to 50 percent beyond that called for by the tube manufacturer.

An efficient blower is required when using the external-anode tubes, such as the 4X150A. Such tubes represent a trade-off which allows high-power operation with a physically small device at the expense of increased complexity in the cooling system. Other types of external-anode tubes are now being produced for conductive cooling. An electrical insulator which is also an excellent thermal conductor, such as AlSiMag, couples the tube to a heat sink. Requirements for the heat dissipator are calculated in the same way as for power transistors, as outlined below. Similar tubes are made with special anode structures for water or vapor cooling, allowing high-power operation without producing an objectionable noise level from the cooling system.

Transistor Cooling

Bipolar power transistors usually have the collector connected directly to the case of the device, as the collector must dissipate most of the heat generated when the transistor is in operation. However, even the larger case designs cannot conduct heat away fast enough to keep the operating temperature of the device functioning within the safe area, the maximum temperature that a device can stand without damage. Safe area is usually specified in a device data sheet, often in graphical form. Germanium power transistors may be operated at up to 100 degrees C while the silicon types may be run at up to 200 degrees C. Leakage currents in germanium devices can be very high at elevated temperatures; thus, for power applications silicon transistors are preferred.

A thermal sink, properly chosen, will remove heat at a rate which keeps the transistor junction temperature in the safe area. For low-power applications a simple clip-on heat sink will suffice, while for 100-watts of input power a massive cast-aluminum finned radiator will be necessary. In general, the case temperature of a power transistor must be kept below the point at which it will produce a burn when touched.

Heat-Sink Design

Simple heat sinks, made as described in the Construction Practices chapter, can be made more effective (by 25 percent or more) by applying a coat of flat-black paint. Finned radiators are most effective when placed where maximum air flow can be achieved – outside a case with the fins placed vertically. The size of a finned heat sink required to give a desired thermal resistance, a measure of the ability to dissipate heat, is shown in Fig. 6-19A. Fig. 6-19B is a simplified chart of the thermal resistance needed in a heat sink for transistors in TO-5 and TO-44 cases. These figures

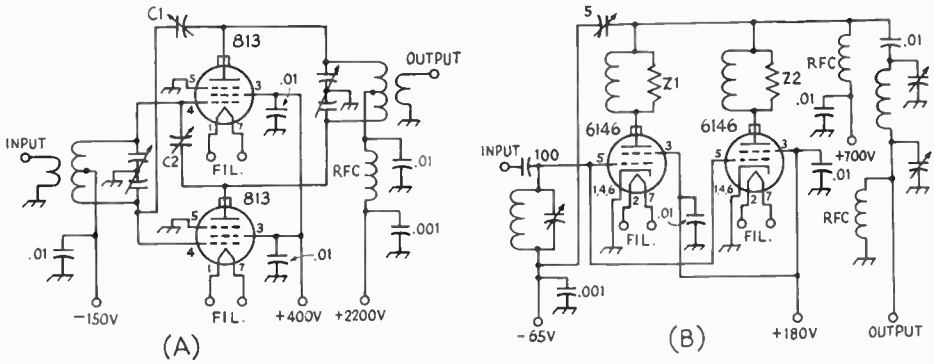

Fig. 6-20 — Typical (A) push-pull and (B) parallel amplifier circuits.

are based on several assumptions, so they can be considered a *worst-case* situation. Smaller heat sinks may be usable.

The thermal design of solid-state circuits has been covered in *QST* for April, 1972. The surface contact between the transistor case and the heat sink is extremely important. To keep the sink from being "hot" with dc, a mica insulator is usually employed between the transistor case and the heat dissipator. Newer types of transistors have a case mounting bolt insulated from the collector so that it may be connected directly to the heat sink. Whatever the arrangement, the use of a conductive compound such as silicone grease (Corning PC-4) is recommended between the transistor and the sink. For high-power designs, it may be desirable to add a small cooling fan, providing a stream of air across the heat sink, to keep the size of the heat dissipator within reasonable limits. Even a light air flow greatly increases the radiator's ability to dispose of excess heat.

OUTPUT POWER FROM TRANSMITTERS

CW or FM: In a cw or fm transmitter, any class of amplifier can be used as an output or intermediate amplifier. (For reasonable efficiency, a frequency multiplier *must* be operated Class C.) Class-C operation of the amplifier gives the highest efficiency (65 to 75 percent), but it is likely to be accompanied by appreciable harmonics and consequent TVI possibilities. If the excitation is keyed in a cw transmitter, Class-C operation of subsequent amplifiers will, under certain conditions, introduce key clicks not present on the keyed excitation (see chapter on Code Transmission). The peak envelope power (PEP) input or output of any cw (or fm) transmitter is the "key-down" input or output.

A-M: In an amplitude-modulated phone transmitter, plate modulation of a Class-C output amplifier results in the highest output for a given input to the output stage. The efficiency is the same as for cw or fm with the same amplifier, from 65 to 75 percent. (In most cases the manufacturer rates the *maximum allowable input* on plate-modulated phone at about 2/3 that of cw or fm.) A plate-modulated stage running 100 watts input will deliver a carrier output of from 65 to 75 watts, depending upon the tube, frequency and circuit factor. The PEP output of any a-m signal is four times the carrier output power, or 260 to 300 watts for the 100-watt input example.

Grid- (control or screen) modulated output amplifiers in a-m operation run at a carrier efficiency of 30 to 35 percent, and a grid-modulated stage with 100 watts input has a carrier output of 30 to 35 watts. (The PEP output, four times the carrier output, is 120 to 140 watts.)

Running the legal input limit in the United States, a plate-modulated output stage can deliver a carrier output of 650 to 750 watts, while a screen- or control-grid-modulated output amplifier can deliver only a carrier of 300 to 350 watts.

SSB: Only *linear* amplifiers can be used to amplify ssb signals without distortion, and this limits the choice of output amplifier operation to Classes A, AB_1, AB_2, and B. The efficiency of operation of these amplifiers runs from about 20 to 65 percent. In all but Class-A operation the indicated (by plate-current meter) input will vary with the signal, and it is not possible to talk about relative inputs and outputs as readily as it is with other modes. Therefore linear amplifiers are rated by PEP (input or output) at a given distortion level, which indicates not only how much ssb signal they will deliver but also how effective they will be in amplifying an a-m signal.

LINEAR AMPLIFIERS FOR A-M: In considering the practicality of adding a linear output amplifier to an existing a-m transmitter, it is necessary to know the carrier output of the a-m transmitter and the PEP output rating of the linear amplifier. Since the PEP output of an a-m signal is four times the carrier output, it is obvious that a linear with a PEP output rating of only four times the carrier output of the a-m transmitter is no amplifier at all. If the linear amplifier has a PEP output rating of 8 times the a-m transmitter carrier output, the output power will be doubled and a 3-dB improvement will be obtained. In most cases a 3-dB change is *just discernible* by the receiving operator.

By comparison, a linear amplifier with a PEP output rating of four times an existing ssb, cw or fm transmitter will *quadruple* the output, a 6-dB improvement, It should be noted that the linear amplifier must be rated for the mode (ssb, cw or fm) with which it is to be used.

GROUNDED-GRID AMPLIFIERS: The preceding discussion applies to vacuum-tube amplifiers connected in a grounded-cathode or grounded-grid circuit. However, there are a few points that apply only to grounded-grid amplifiers.

A tube operated in a given class (AB_1, B, C) will require more driving power as a grounded-grid amplifier than as a grounded-cathode amplifier. This is not because the grid losses run higher in the grounded-grid configuration but because some of the driving power is coupled directly through the tube and appears in the plate load circuit. Provided enough driving power is available, this increased requirement is of no concern in cw or linear operation. In a-m operation, however, the fed-through power prevents the grounded-grid amplifier from being fully modulated (100 percent).

AMPLIFIER CIRCUITS

Parallel and Push-Pull Amplifiers

The circuits for parallel-tube amplifiers are the same as for a single tube, similar terminals of the tubes being connected together. The grid impedance of two tubes in parallel is half that of a single tube. This means that twice the grid tank capacitance shown in Fig. 6-20B should be used for the same Q.

The plate load resistance is halved so that the plate-tank capacitance for a single tube (Fig. 6-24) also should be doubled. The total grid current will be doubled, so to maintain the same grid bias, the grid-leak resistance should be half that used for a single tube. The required driving power is doubled. The capacitance of a neutralizing capacitor should be doubled and the value of the screen dropping resistor should be cut in half.

In treating parasitic oscillation, it is often necessary to use a choke in each plate lead, rather than one in the common lead to avoid building in a push-pull type of vhf circuit, a factor in obtaining efficient operation at higher frequencies.

Two or more transistors are often operated in parallel to achieve high output power, because several medium-power devices often cost less than a single high-power type. When parallel operation is used, precautions must be taken to insure that equal drive is applied to each transistor. Otherwise, one transistor may "hog" most of the drive and exceed its safe ratings.

A basic push-pull circuit is shown in Fig. 6-20A. Amplifiers using this circuit are cumbersome to bandswitch and consequently are not very popular below 30 MHz. However, since the push-pull configuration places tube input and output capacitances in series, the circuit is often used at 50 MHz and higher.

In the circuit shown at A two 813s are used. Cross neutralization is employed, with C1 connected from the plate of one tube to the grid of the second, while C2 is attached in the reverse order.

GROUNDED-GRID AMPLIFIERS

Fig. 6-21A shows the input circuit of a grounded-grid triode amplifier. In configuration it is similar to the conventional grounded-cathode circuit except that the grid, instead of the cathode, is at ground potential. An amplifier of this type is characterized by a comparatively low input impedance and a relatively high driver power requirement. The additional driver power is not consumed in the amplifier but is "fed through" to the plate circuit where it combines with the normal plate output power. The total rf power output is the sum of the driver and amplifier output powers less the power normally required to drive the tube in a grounded-cathode circuit.

Positive feedback is from plate to cathode through the plate-cathode capacitance of the tube. Since the grounded-grid is interposed between the plate and cathode, this capacitance is small, and neutralization usually is not necessary.

In the grounded-grid circuit the cathode must be isolated for rf from ground. This presents a practical difficulty especially in the case of a filament-type tube whose filament current is large. In plate-modulated phone operation the driver power fed through to the output is not modulated.

The chief application for grounded-grid amplifiers in amateur work below 30 MHz is in the case where the available driving power far exceeds the power that can be used in driving a conventional grounded-cathode amplifier.

Screen-grid tubes are also used sometimes in grounded-grid amplifiers. In some cases, the screen

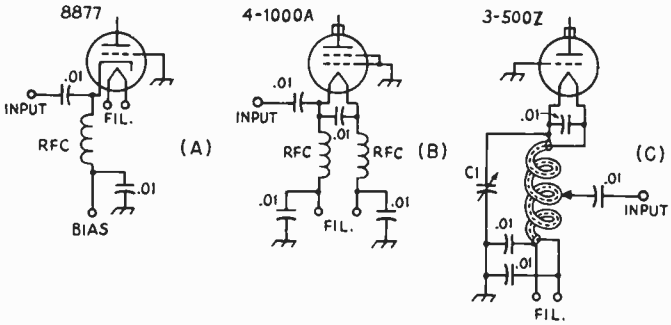

Fig. 6-21 — Input circuits for triode or triode-connected power tubes operated grounded grid.

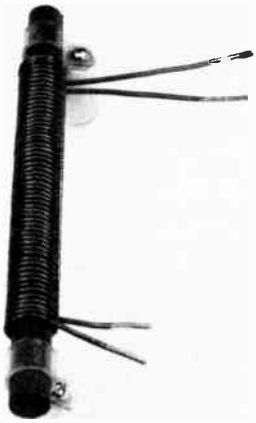

Fig. 6-22 — A 30-A filament choke for a grounded-grid power amplifier consisting of 28 turns of No. 10 enam. wire on a 1/2-inch diameter ferrite rod 7 inches long.

is simply connected in parallel with the grid, as in Fig. 6-21B and the tube operates as a high-μ triode. In other cases, the screen is bypassed to ground and operated at the usual dc potential, as shown at C. Since the screen is still in parallel with the grid for rf, operation is very much like that of a triode except that the positive voltage on the screen reduces driver-power requirements.

In indirectly-heated cathode tubes, the low heater-to-cathode capacitance will often provide enough isolation to keep rf out of the heater transformer and the ac lines. If not, the heater voltage must be applied through rf chokes.

In a directly-heated cathode tube, the filament must be maintained above rf ground. This can be done by using a pair of filament chokes or by using the input tank circuit, as shown in Fig. 6-21C. In the former method, a double solenoid (often wound on a ferrite core) is generally used, although separate chokes can be used. When the tank circuit is used, the tank inductor is wound from two (insulated) conductors in parallel or from an insulated conductor inside a tubing outer conductor. A typical filament choke is shown in Fig. 6-22.

The input impedance of a grounded-grid power stage is usually between 30 and 150 ohms. For circuits similar to those shown in Figs. 6-21A and B some form of input tuning network is needed. A high-C, low-Q parallel-resonant or pi-section network will suffice. The input network provides benefit other than impedance matching — a reduction in the IM distortion produced by the stage when amplifying an ssb signal. A typical input circuit is shown in Fig. 6-16F. When an amplifier is built for single-band operation, a tank circuit similar to that shown in Fig. 6-21C may be employed. Proper input matching is achieved by tapping the input down on the coil.

TRANSISTOR CIRCUITS

A transistor amplifier requires some means for impedance matching at the input and output of the stage. For conventional narrow-band amplifier designs, impedance matching is achieved with tuned networks (pi, L or T sections or combinations thereof). To simplify band-switching requirements, broadband amplifiers with four octaves or more of bandwidth are desirable. Wide bandwidths are achieved by using a special form of transmission-line transformer for interstage and output coupling that is described later in this chapter.

Most solid-state Class-C amplifiers are operated with both the base and emitter leads connected to dc ground. Thus, the transistor is practically off when no driving signal is present. The distortion of the drive signal by such an amplifier is appreciable. However, with cw, fm, or collector-modulated a-m, the harmonics produced are removed from the desired frequency by at least a factor of 2. Thus, harmonic energy can be reduced or eliminated by using appropriate filters.

Fig. 6-23A shows a basic Class-C transistor amplifier. The base input is held at dc ground through a radio-frequency choke. A second choke, consisting of two ferrite beads (collector lead), eliminates a tendency to vhf parasitic oscillation. At B, parallel-connected transistors are operated Class C. Adjustment of L1 and L2 provide equal levels of drive. The devices chosen for this circuit are designed for 30- to 50-MHz operation. Below 14 MHz some form of degenerative feedback will be needed to prevent self oscillation, as the gain of the transistors is quite high at lower frequencies.

For ssb operation transistors must be forward biased at the base. The lowest distortion results with Class-A operation, but, efficiency is poor. The best trade off between low distortion and high efficiency is Class-B operation, even though operation in this region introduces some severe requirements for the bias circuit. Whenever a transistor is forward biased, thermal runaway can be a problem. Also, ssb drive varies in amplitude causing large variations in the transistor base current. For best linearity, the dc base-bias voltage should remain constant as the rf drive level is varied. This situation is in conflict with the conditions needed to prevent thermal runaway. Exotic schemes have been designed to provide the proper base bias for Class-B ssb amplification. However, a simple diode circuit such as shown in Figs. 6-23C and D can provide the required dc stability with protection against thermal damage. The ballasted type of transistors are preferred for these circuits. Typical choices for Class-B ssb service are the 2N5941, 2N2942, 2N3375, 2N5070, 2N5071, and the 2N5093. The design of suitable broadband transformers for the circuits of Fig. 6-29 is covered later in this chapter.

The circuits at 6-29C and D are similar except for the choice of the active device. Both designs were developed by K7QWR. The base-bias circuit maintains a steady voltage while supplying current that varies by a factor of 100 to 1 with drive. The gain versus frequency of both circuits follows the

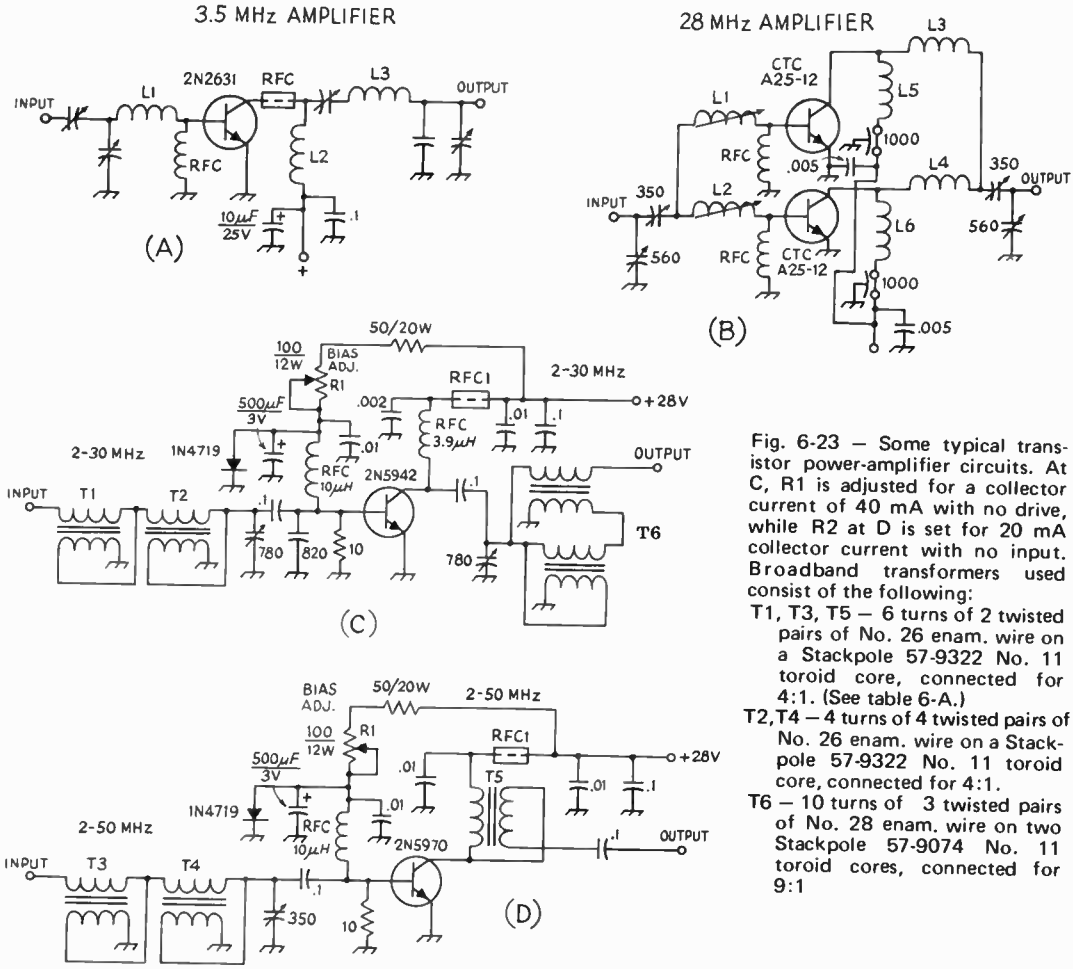

Fig. 6-23 — Some typical transistor power-amplifier circuits. At C, R1 is adjusted for a collector current of 40 mA with no drive, while R2 at D is set for 20 mA collector current with no input. Broadband transformers used consist of the following:

T1, T3, T5 — 6 turns of 2 twisted pairs of No. 26 enam. wire on a Stackpole 57-9322 No. 11 toroid core, connected for 4:1. (See table 6-A.)

T2,T4 — 4 turns of 4 twisted pairs of No. 26 enam. wire on a Stackpole 57-9322 No. 11 toroid core, connected for 4:1.

T6 — 10 turns of 3 twisted pairs of No. 28 enam. wire on two Stackpole 57-9074 No. 11 toroid cores, connected for 9:1

power-output curves of the transistors used, changing from 25 dB at 2 MHz to 13 dB at 30 MHz. IMD is typically 30 dB or more down with either circuit.

RF POWER-AMPLIFIER TANKS AND COUPLING

TANK *Q*

Rf power amplifiers used in amateur transmitters are operated under Class-C or -AB conditions (see chapter on tube fundamentals). The main objective, of course, is to deliver as much fundamental power as possible into a load, *R* without exceeding the tube ratings. The load resistance *R* may be in the form of a transmission line to an antenna, or the input circuit of another amplifier. A further objective is to minimize the harmonic energy (always generated by an amplifier) fed into the load circuit. In attaining these objectives, the *Q* of the tank circuit is of importance. When a load is coupled inductively, the *Q* of the tank circuit will have an effect on the coefficient of coupling necessary for proper loading of the amplifier. In respect to all of these factors, a tank *Q* of 10 to 20 is usually considered optimum. A much lower *Q* will result in less efficient operation of the amplifier tube, greater harmonic output, and greater difficulty in coupling inductively to a load. A much higher *Q* will result in higher tank current with increased loss in the tank coil. Efficiency of a tank circuit is determined by the ratio of loaded *Q* to unloaded *Q* by the relationship:

$$Eff. = 100\left(1 - \frac{Q_L}{Q_U}\right)$$

where Q_L is the loaded *Q* and Q_U is the unloaded *Q*.

The *Q* is determined (see chapter on electrical laws and circuits) by the *L/C* ratio and the load resistance at which the tube is operated. The tube load resistance is related, in approximation, to the ratio of the dc plate voltage to dc plate current at

which the tube is operated and can be computed from:

Class-A Tube:

$$R_L = \frac{\text{Plate Volts}}{1.3 \times \text{Plate Current}}$$

Class-B Tube:

$$R_L = \frac{\text{Plate Volts}}{1.57 \times \text{Plate Current}}$$

Class-C Tube:

$$R_L = \frac{\text{Plate Volts}}{2 \times \text{Plate Current}}$$

Transistor:

$$R_L = \frac{(\text{Collector Volts})^2}{2 \times \text{Power Output (Watts)}}$$

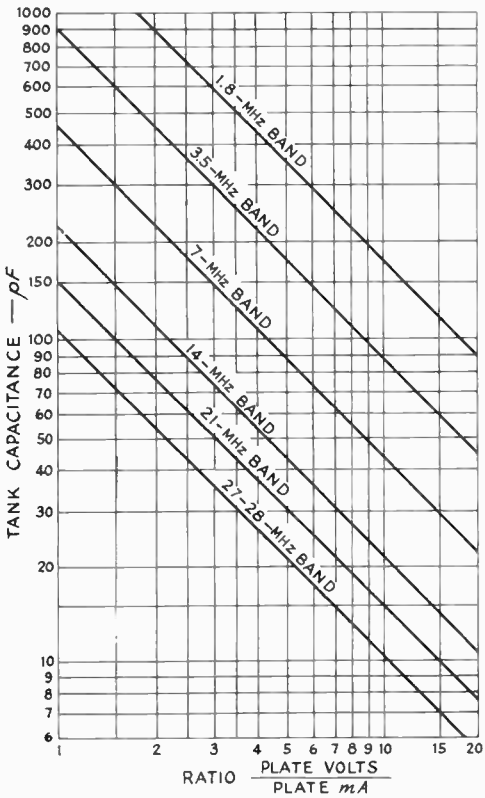

Fig. 6-24 — Chart showing plate tank capacitance required for a Q of 10. Divide the tube plate voltage by the plate current in milliamperes. Select the vertical line corresponding to the answer obtained. Follow this vertical line to the diagonal line for the band in question, and thence horizontally to the left to read the capacitance. For a given ratio of plate voltage/plate current, doubling the capacitance shown doubles the Q. When a split-stator capacitor is used in a balanced circuit, the capacitance of each section may be one half the value given by the chart.

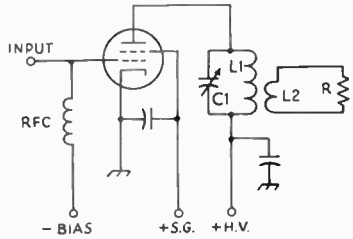

Fig. 6-25 — Inductive-link output coupling circuits.
C1 — Plate tank capacitor — see text and Fig. 6-24 for capacitance.
L1 — To resonate at operating frequency with C1. See *LC* chart and inductance formula in electrical-laws chapter, or use ARRL *Lightning Calculator.*
L2 — Reactance equal to line impedance. See reactance chart and inductance formula in electrical-laws chapter, or use ARRL *Lightning Calculator.*
R — Representing load.

Parallel-Resonant Tank

The amount of C that will give a Q of 10 for various ratios is shown in Fig. 6-24. For a given plate-voltage/plate-current ratio, the Q will vary directly as the tank capacitance, twice the capacitance doubles the Q, etc. For the same Q, the capacitance of *each section* of a split-stator capacitor in a balanced circuit should be half the value shown.

These values of capacitance include the output capacitance of the amplifier tube, the input capacitance of a following amplifier tube if it is coupled capacitively, and all other stray capacitances. At the higher plate-voltage/plate-current ratios, the chart may show values of capacitance, for the higher frequencies, smaller than those attainable in practice. In such a case, a tank Q higher than 10 is unavoidable.

INDUCTIVE-LINK COUPLING

Coupling to Flat Coaxial Lines

When the load R in Fig. 6-25 is located for convenience at some distance from the amplifier, or when maximum harmonic reduction is desired, it is advisable to feed the power to the load through a low-impedance coaxial cable. The shielded construction of the cable prevents radiation and makes it possible to install the line in any convenient manner without danger of unwanted coupling to other circuits.

If the line is more than a small fraction of a wavelength long, the load resistance at its output end should be adjusted, by a matching circuit if necessary, to match the impedance of the cable. This reduces losses in the cable and makes the coupling adjustments at the transmitter independent of the cable length. Matching circuits for use between the cable and another transmission line are discussed in the chapter on transmission lines, while the matching adjustments when the load is the grid circuit of a following amplifier are described elsewhere in this chapter.

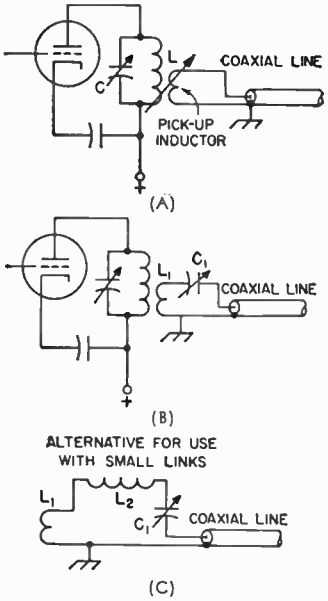

Fig. 6-26 — With flat transmission lines, power transfer is obtained with looser coupling if the line input is tuned to resonance. C1 and L1 should resonate at the operating frequency. See table for maximum usable value of C1. If circuit does not resonate with maximum C1 or less, inductance of L1 must be increased or added in series at L2.

Table 6-A

Capacitance in pF Required for Coupling to Flat Coaxial Lines with Tuned Coupling Circuit[1]

Frequency Band MHz	*Characteristic Impedance of Line* 52 *ohms*	75 *ohms*
3.5	450	300
7	230	150
14	115	75
21	80	50
28	60	40

[1] Capacitance values are maximum usable.
Note: Inductance in circuit must be adjusted to resonate at operating frequency.

Assuming that the cable is properly terminated, proper loading of the amplifier will be assured, using the circuit of Fig. 6-26A, if

1) The plate tank circuit has reasonably higher value of Q. A value of 10 is usually sufficient.

2) The inductance of the pickup or link coil is close to the optimum value for the frequency and type of line used. The optimum coil is one whose self-inductance is such that its reactance at the operating frequency is equal to the characteristic impedance, Z_0, of the line.

3) It is possible to make the coupling between the tank and pickup coils very tight.

The second in this list is often hard to meet. Few manufactured link coils have adequate inductance even for coupling to a 50-ohm line at low frequencies.

If the line is operating with a low SWR, the system shown in Fig. 6-26A will require tight coupling between the two coils. Since the secondary (pickup coil) circuit is not resonant, the leakage reactance of the pickup coil will cause some detuning of the amplifier tank circuit. This detuning effect increases with increasing coupling, but is usually not serious. However, the amplifier tuning must be adjusted to resonance, as indicated by the plate-current dip, each time the coupling is changed.

Tuned Coupling

The design difficulties of using "untuned" pickup coils, mentioned above, can be avoided by using a coupling circuit tuned to the operating frequency. This contributes additional selectivity as well, and hence aids in the suppression of spurious radiations.

If the line is flat the input impedance will be essentially resistive and equal to the Z_0 of the line. With coaxial cable, a circuit of reasonable Q can be obtained with practicable values of inductance and capacitance connected in series with the line's input terminals. Suitable circuits are given in Fig. 6-26 at B and C. The Q of the coupling circuit often may be as low as 2, without running into difficulty in getting adequate coupling to a tank circuit of proper design. Larger values of Q can be used and will result in increased ease of coupling, but as the Q is increased the frequency range over which the circuit will operate without readjustment becomes smaller. It is usually good practice, therefore, to use a coupling-circuit Q just low enough to permit operation, over as much of a band as is normally used for a particular type of communication, without requiring retuning.

Capacitance values for a Q of 2 and line impedances of 52 and 75 ohms are given in the accompanying table. These are the *maximum* values that should be used. The inductance in the circuit should be adjusted to give resonance at the

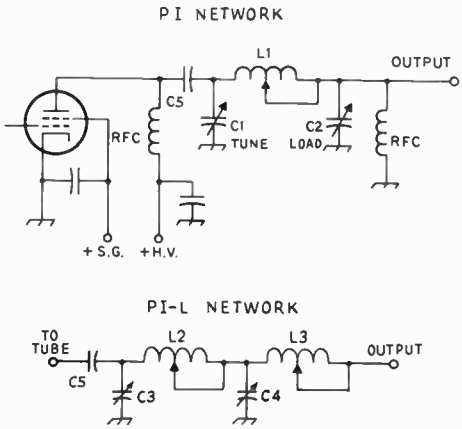

Fig. 6-27 — Pi and pi-L output-coupling networks.

operating frequency. If the link coil used for a particular band does not have enough inductance to resonate, the additional inductance may be connected in series as shown in Fig. 6-26C.

Characteristics

In practice, the amount of inductance in the circuit should be chosen so that, with somewhat loose coupling between L1 and the amplifier tank coil, the amplifier plate current will increase when the variable capacitor, C1, is tuned through the value of capacitance given by the table. The coupling between the two coils should then be increased until the amplifier loads normally, without changing the setting of C1. If the transmission line is flat over the entire frequency band under consideration, it should not be necessary to readjust C1 when changing frequency, if the values given in the table are used. However, it is unlikely that the line actually will be flat over such a range, so some readjustment of C1 may be needed to compensate for changes in the input impedance of the line. If the input impedance variations are not large, C1 may be used as a loading control, no changes in the coupling between L1 and the tank coil being necessary.

The degree of coupling between L1 and the amplifier tank coil will depend on the coupling-circuit Q. With a Q of 2, the coupling should be tight – comparable with the coupling that is typical of "fixed-link" manufactured coils. With a swinging link it may be necessary to increase the Q of the coupling circuit in order to get sufficient power transfer. This can be done by increasing the L/C ratio.

PI AND PI-L OUTPUT TANKS

A pi-section and pi-L tank circuit may also be used in coupling to an antenna or transmission line, as shown in Fig. 6-27. The optimum values of capacitance and inductance are dependent upon values of amplifier power input and output load resistance.

Values for L and C may be taken directly from the charts of Fig. 6-28 if the output load resistance is the usual 52 ohms. It should be borne in mind that these values apply only where the output load is resistive, i.e., where the antenna and line have been matched. Fig. 6-28 was provided by W6FFC.

Output-Capacitor Ratings

The voltage rating of the output capacitor will depend upon the SWR. If the load is resistive, receiving-type air capacitors should be adequate for amplifier input powers up to 2 kW PEP when

		TUBE LOAD IMPEDANCE (OPERATING Q)								
	MHz	*1500(12)*	*2000(12)*	*2500(12)*	*3000(12)*	*3500(12)*	*4000(12)*	*5000(13)*	*6000(14)*	*8000(16)*
C1	3.5	420	315	252	210	180	157	126	114	99
	7	190	143	114	95	82	71	57	52	45
	14	93	70	56	47	40	35	28	25	22
	21	62	47	37	31	27	23	19	17	15
	28	43	32	26	21	18	16	13	12	10
C2	3.5	2117	1776	1536	1352	1203	1079	875	862	862
	7	942	783	670	583	512	451	348	341	341
	14	460	382	326	283	247	217	165	162	162
	21	305	253	216	187	164	144	109	107	107
	28	210	174	148	128	111	97	72	70	70
L1	3.5	5.73	7.46	9.17	10.86	12.53	14.19	17.48	19.18	21.98
	7	3.14	4.09	5.03	5.95	6.86	7.77	9.55	10.48	12.02
	14	1.60	2.08	2.56	3.03	3.49	3.95	4.85	5.33	6.11
	21	1.07	1.39	1.71	2.02	2.34	2.64	3.25	3.56	4.09
	28	0.77	1.01	1.24	1.46	1.69	1.91	2.34	2.57	2.95

		TUBE LOAD IMPEDANCE (OPERATING Q)								
	MHz	*1500(12)*	*2000(12)*	*2500(12)*	*3000(12)*	*3500(12)*	*4000(12)*	*5000(12)*	*6000(12*	*8000(12)*
C3	3.5	406	305	244	203	174	152	122	102	76
	7	188	141	113	94	81	71	56	47	35
	14	92	69	55	46	40	35	28	23	17
	21	62	46	37	31	26	23	18	15	12
	28	43	32	26	21	18	16	13	11	8
C4	3.5	998	859	764	693	638	593	523	472	397
	7	430	370	329	298	274	255	225	203	171
	14	208	179	159	144	133	123	109	98	83
	21	139	119	106	96	89	82	73	65	55
	28	95	81	72	66	60	56	50	45	38
L2	3.5	7.06	9.05	10.99	12.90	14.79	16.67	20.37	24.03	31.25
	7	3.89	4.97	6.03	7.07	8.10	9.12	11.13	13.11	17.02
	14	1.99	2.54	3.08	3.61	4.13	4.65	5.68	6.69	8.68
	21	1.33	1.69	2.05	2.41	2.76	3.10	3.78	4.46	5.78
	28	0.96	1.22	1.48	1.74	1.99	2.24	2.73	3.22	4.17
L3	3.5	4.45	4.45	4.45	4.45	4.45	4.45	4.45	4.45	4.45
	7	2.44	2.44	2.44	2.44	2.44	2.44	2.44	2.44	2.44
	14	1.24	1.24	1.24	1.24	1.24	1.24	1.24	1.24	1.24
	21	0.83	0.83	0.83	0.83	0.83	0.83	0.83	0.83	0.83
	28	0.60	0.60	0.60	0.60	0.60	0.60	0.60	0.60	0.60

Fig. 6-28 – Chart to determine the values of L and C needed for a pi (A) and pi-L (B) network to match a range of input impedances to a 50-ohm load.

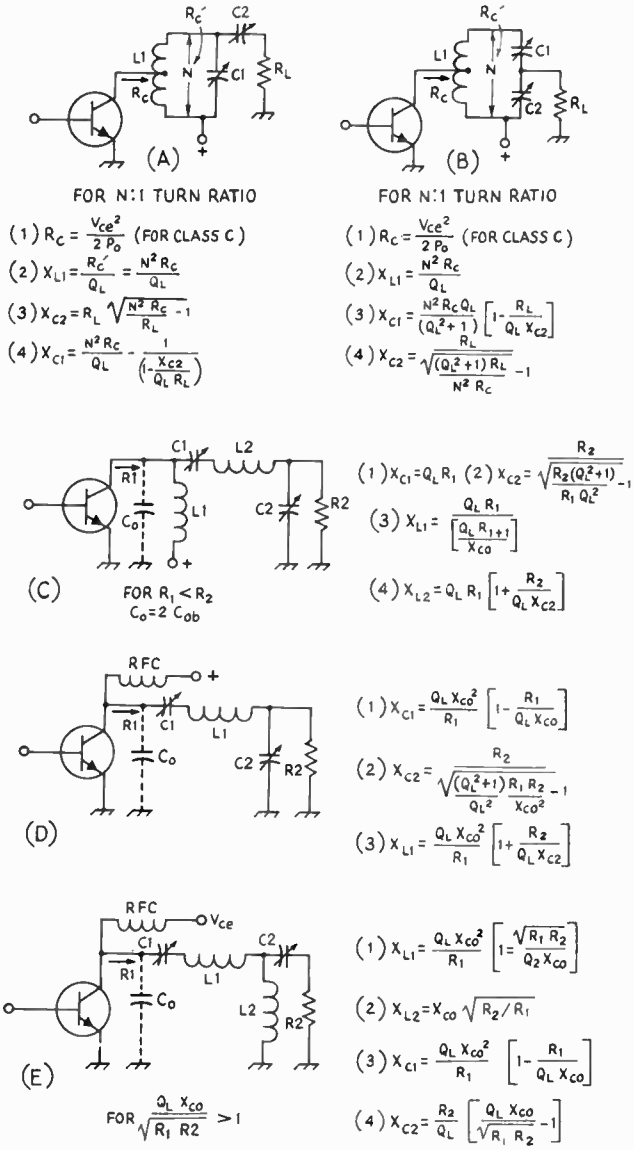

Fig. 6-29 — Typical transistor output-matching networks.

feeding 52- or 75-ohm loads. In obtaining the larger capacitances required for the lower frequencies, it is common practice to switch one or more fixed capacitors in parallel with the variable air capacitor. While the voltage rating of a mica or ceramic capacitor may not be exceeded in a particular case, capacitors of these types are limited in current-carrying capacity. Postage-stamp silver-mica capacitors should be adequate for amplifier inputs over the range from about 70 watts at 28 MHz to 400 watts at 14 MHz and lower. The larger mica capacitors (CM-45 case) having voltage ratings of 1200 and 2500 volts are usually satisfactory for inputs varying from about 350 watts at 28 MHz to 1 kW at 14 MHz and lower. Because of these current limitations, particularly at the higher frequencies, it is advisable to use as large an air capacitor as practicable, using the micas only at the lower frequencies. Broadcast-receiver replacement-type capacitors can be obtained reasonably. Their voltage insulation should be adequate for inputs of 1000 watts or more.

TRANSISTOR OUTPUT CIRCUITS

Since rf power transistors have a low output impedance (on the order of 5 ohms or less), the problem of coupling the transistor to the usual 50-ohm load is the reverse of the problem with a vacuum-tube amplifier. The 50-ohm load must be transformed to a low resistance.

Figs 6-29A and B show two types of parallel-tuned circuits used to couple the load to the collector circuit. The collector is tapped down on the inductor in both cases. C1 provides tuning for the collector and C2 adjusts the coupling to the load to achieve the proper impedance transformation. The use of the tapped connection to the inductor helps to maintain the loaded Q of the circuit while minimizing variations in tuning with changes in the junction capacitance of the transistor.

Circuits of Figs. 6-29C through E are not dependent upon coupling coefficient of a tapped coil for load-impedance transformation, making them more suitable for use at hf than either A or B. The collector-emitter capacitance (C_o) of the transistor is a major factor in the calculations used to design these circuits. Unfortunately C_o is not constant, so cut-and-try adjustments are usually necessary to optimize a particular circuit.

Early tests of transistor rf power amplifiers should be made with low voltage, a dummy load and no drive. Some form of output indicator should be included. When it has been established

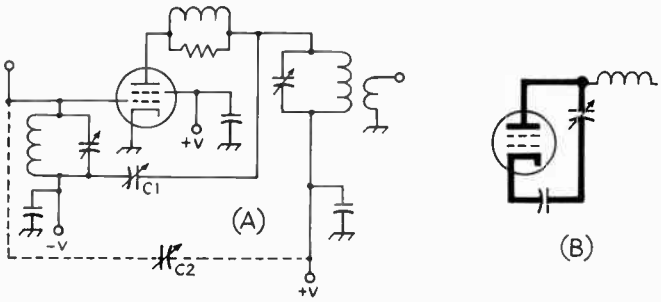

Fig. 6-30 — (A) A neutralizing scheme may use either C1 or C2 to cancel the effect of grid-to-plate capacitance in the tube (B) Vhf parasitic circuit shown with heavy lines.

that no instability exists, the drive can be applied in increments and adjustment made for maximum output. The amplifier should never be operated at high voltage and no load.

BROADBAND COUPLING

The techniques of broadband-transformer construction use transmission-line elements. A transformer consists of a short transmission line (one-eighth wavelength or less) made from a twisted-wire pair, coaxial or strip line, wound on a high-permeability toroid core to improve the low-frequency characteristics. At vhf the core may be omitted. Only discrete impedance transformations are possible; typical ratios are 9/4:1, 4:1, 9:1, 16:1, and 25:1. The higher ratios are difficult to achieve in practice, so several 4:1 transformers are employed for a large transformation ratio as shown in Fig. 6-23. Hybrid transformers, providing the 180-degree phase shift for input and output matching to push-pull stages, may also be made using broadband techniques.

Large toroid cores are not required for moderate power levels. A one-half inch diameter core is sufficient for operation at 100 watts at the low impedance levels found in transistor circuits. Because the current is high it is important to keep the resistance of the conductors low. Multiconductor leads (3 or 4 strands of No. 26 enam., twisted) or the flat enam. strip used for transformer windings) are suitable. Some typical designs are shown in Table 6-A.

STABILIZING AMPLIFIERS

A straight amplifier operates with its input and output circuits tuned to the same frequency. Therefore, unless the coupling between these two circuits is brought to the necessary minimum, the amplifier will oscillate as a tuned-plate tuned-grid circuit. Care should be used in arranging components and wiring of the two circuits so that there will be negligible opportunity for coupling external to the tube or transistor itself. Complete shielding between input and output circuits usually is required. All rf leads should be kept as short as possible and particular attention should be paid to the rf return paths from input and output tank circuits to emitter or cathode. In general, the best arrangement using a tube is one in which the cathode connection to ground, and the plate tank circuit are on the same side of the chassis or other shielding. The "hot" lead from the input tank (or driver plate tank) should be brought to the socket through a hole in the shielding. Then when the grid tank capacitor or bypass is grounded, a return path through the hole to cathode will be encouraged, since transmission-line characteristics are simulated.

A check on external coupling between input and output circuits can be made with a sensitive indicating device, such as the wavemeter shown in the Measurements chapter. The amplifying device is removed. With the driver stage running and tuned to resonance, the indicator should be coupled to the output tank coil and the output tank capacitor tuned for any indication of rf feedthrough. Experiment with shielding and rearrangement of parts will show whether the isolation can be improved. For additional information on transistor circuits see Chapter 4.

Screen-Grid Tube Neutralizing Circuits

The plate-grid capacitance of screen-grid tubes is reduced to a fraction of a picofarad by the interposed grounded screen. Nevertheless, the power sensitivity of these tubes is so great that only a very small amount of feedback is necessary to start oscillation. To assure a stable amplifier, it is usually necessary to load the grid circuit, or to use a neutralizing circuit.

The capacitive neutralizing system for screen-grid tubes is shown in Fig. 6-30A. C1 is the neutralizing capacitor. The capacitance should be chosen so that at some adjustment of C1,

$$\frac{C1}{C3} = \frac{\textit{Tube grid-plate capacitance (or } C_{gp})}{\textit{Tube input capacitance (or } C_{IN})}$$

The grid-cathode capacitance must include all strays directly across the tube capacitance, including the capacitance of the tuning-capacitor stator to ground. This may amount to 5 to 20 pF. In the case of capacitance coupling, the output capacitance of the driver tube must be added to the grid-cathode capacitance of the amplifier in arriving at the value of C1.

Neutralizing a Screen-Grid Amplifier Stage

There are two general procedures available for indicating neutralization in a screen-grid amplifier stage. If the screen-grid tube is operated with or without grid current, a sensitive output indicator

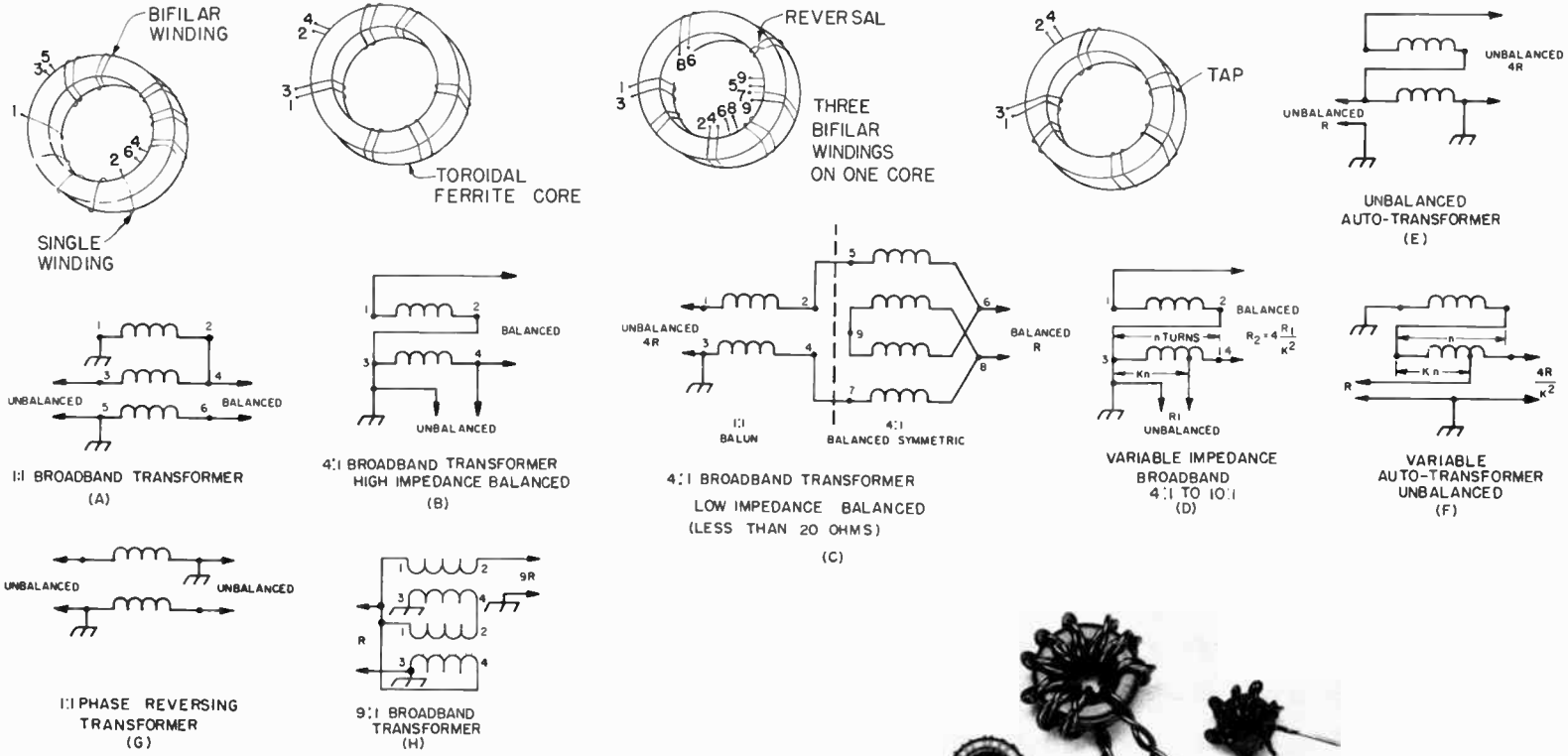

Table 6A — Basic broadband balun transformers. Bifilar windings are six to ten turns, depending on the ferrite-core permeability. In the formulas associated with Figs. 1D and 1F, k equals the ratio of the number of tapped turns to the total number of turns in the tapped winding. A suitable ferrite material is $Q1$ with a permeability of 125. Very small size cores (1/4-to 3/4-inch OD) may be used for receiving and low-power applications. For full-power applications a 2-1/2-inch OD $Q1$ core with 1/2-inch cross section wound with No. 14 Formex copper wire, seven turns per winding, is recommended.

can be used. If the screen-grid tube is operated with grid current, the grid-current reading can be used as an indication of neutralization. When the output indicator is used, both screen and plate voltages must be removed from the tubes, but the dc circuits from the plate and screen to cathode must be completed. If the grid-current reading is used, the plate voltage may remain on but the screen voltage must be zero, with the dc circuit completed between screen and cathode.

The immediate objective of the neutralizing process is reducing to a minimum the rf driver voltage fed from the input of the amplifier to its output circuit through the grid-plate capacitance of the tube. This is done by adjusting carefully, bit by bit, the neutralizing capacitor or link coils until an rf indicator in the output circuit reads minimum, or the reaction of the unloaded plate-circuit tuning on the grid-current value is minimized.

The wavementer shown in the Measurements chapter makes a sensitive neutralizing indicator. The wavemeter coil should be coupled to the output tank coil at the low-potential or "ground" point. Care should be taken to make sure that the coupling is loose enough at all times to prevent buring out the meter or the rectifier. The plate tank capacitor should be readjusted for maximum reading after each change in neutralizing.

When the grid-current meter is used as a neutralizing indicator, the screen should be grounded for rf and dc, as mentioned above. There will be a change in grid current as the unloaded plate tank circuit is tuned through resonance. The neutralizing capacitor (or inductor) should be adjusted until this deflection is brought to a minimum. As a final adjustment, screen voltage should be returned and the neutralizing adjustment continued to the point where minimum plate current, maximum grid current and maximum screen current occur simultaneously. An increase in grid current when the plate tank circuit is tuned slightly on the high-frequency side of resonance indicates that the neutralizing capacitance is too small. If the increase is on the low-frequency side, the neutralizing capacitance is too large. When neutralization is complete, there should be a slight decrease in grid current on either side of resonance.

Grid Loading

The use of a neutralizing circuit may often be avoided by loading the grid circuit if the driving stage has some power capability to spare. Loading by tapping the grid down on the grid tank coil (or the plate tank coil of the driver in the case of capacitive coupling), or by a resistor from grid to cathode is effective in stabilizing an amplifier.

VHF Parasitic Oscillation

Parasitic oscillation in the vhf range will take place in almost every rf power amplifier. To test for vhf parasitic oscillation, the grid tank coil (or driver tank coil in the case of capacitive coupling) should be short-circuited with a clip lead. This is to prevent any possible t.g.t.p. oscillation at the operating frequency which might lead to confusion in identifying the parasitic. Any fixed bias should be replaced with a grid leak of 10,000 to 20,000 ohms. All load on the output of the amplifier should be disconnected. Plate and screen voltages should be reduced to the point where the rated dissipation is not exceeded. If a Variac is not available, voltage may be reduced by a 117-volt lamp in series with the primary of the plate transformer.

With power applied only to the amplifier under test, a search should be made by adjusting the input capacitor to several settings, including minimum and maximum, and turning the plate capacitor through its range for each of the grid-capacitor settings. Any grid current, or any dip or flicker in plate current at any point, indicates oscillation. This can be confirmed by an indicating absorption wavemeter tuned to the frequency of the parasitic and held close to the plate lead of the tube.

The heavy lines of Fig. 6-30B show the usual parasitic tank circuit, which resonates, in most cases, between 100 and 200 MHz. For each type of tetrode, there is a region, usually below the parasitic frequency, in which the tube will be self-neutralized. By adding the right amount of inductance to the parasitic circuit, its resonant frequency can be brought down to the frequency at which the tube is self-neutralized. However, the resonant frequency should not be brought down so low that it falls close to TV Channel 6 (88 MHz). From the consideration of TV1, the circuit may be loaded down to a frequency not lower than 100 MHz. If the self-neutralizing frequency is below 100 MHz, the circuit should be loaded down to somewhere between 100 and 120 MHz with inductance. Then the parasitic can be suppressed by loading with resistance. A coil of 4 or 5 turns, 1/4 inch in diameter, is a good starting size. With the tank capacitor turned to maximum capacitance, the circuit should be checked with a GDO to make sure the resonance is above 100 MHz. Then, with the shortest possible leads, a noninductive 100-ohm 1-watt resistor should be connected across the entire coil. The amplifier should be tuned up to its highest-frequency band and operated at low voltage. The tap should be moved a little at a time to find the minimum number of turns required to suppress the parasitic. Then voltage should be increased until the resistor begins to feel warm after several minutes of operation, and the power input noted. This input should be compared with the normal input and the *power* rating of the resistor increased by this proportion; i.e., if the power is half normal, the wattage rating should be doubled. This increase is best made by connecting 1-watt *carbon* resistors in parallel to give a resultant of about 100 ohms. Or, one of the Globar surge-protection resistors may be used. As power input is increased, the parasitic may start up again, so power should be applied only momentarily until it is made certain that the parasitic is still suppressed. If the parasitic starts up again when voltage is raised, the tap must be moved to include more turns. So long as the parasitic is suppressed, the resistors will heat up only from the operating-frequency current. In grounded-grid

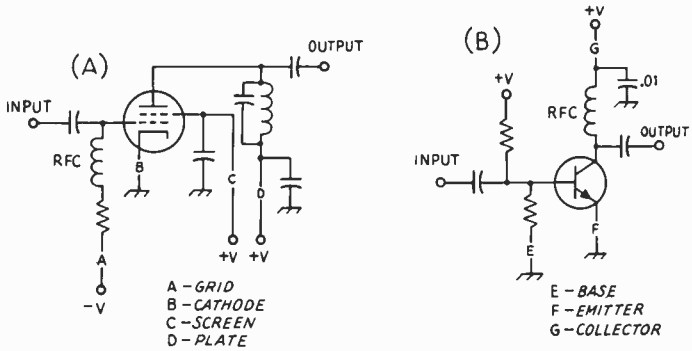

Fig. 6-31 — Metering circuits for (A) tubes and (B) transistors. To measure current, connect a meter at the point shown *in series with the lead.* For voltage measurements, connect the meter from the point indicated *to the common or ground connection.*

circuits it is useful to locate the parasitic suppressor in the cathode lead, as the rf power level is less than at the plate terminal.

Since the resistor can be placed across only that portion of the parasitic circuit represented by L_p, the latter should form as large a portion of the circuit as possible. Therefore, the tank and bypass capacitors should have the lowest possible inductance and the leads shown in heavy lines should be as short as possible and of the heaviest pratical conductor. This will permit L_p to be of maximum size without tuning the circuit below the 100-MHz limit.

Another arrangement that has been used successfully in transistor and low-level tube stages is to place one or more ferrite beads over the input or output leads, as close as possible to the amplifying device. The beads have sufficient low-Q inductance at vhf to discourage any tendency toward parasitic oscillation.

Low-Frequency Parasitic Oscillation

The screening of most transmitting screen-grid tubes is sufficient to prevent low-frequency parasitic oscillation caused by resonant circuits set up by rf chokes in grid and plate circuits. When rf chokes are used in both grid and plate circuits of a triode amplifier, the split-stator tank capacitors combine with the rf chokes to form a low-frequency parasitic circuit, unless the amplifier circuit is arranged to prevent it. Often, a resistor is substituted for the grid rf choke, which will produce the desired result. This resistance should be at least 100 ohms. If any grid-leak resistance is used for biasing, it should be substituted for the 100-ohm resistor.

Transistor LF Parasitics

Using transistors with shunt feed often means low-frequency parasitic trouble. A word about this problem is in order as it usually doesn't occur in vacuum-tube circuits and is often a rough problem for the newcomer to solid state. These parasitics manifest themselves as a wide spectrum of white noise (hash) around and below the operating frequency. They can often be heard on a broadcast receiver several feet away from a transmitter under test. The desired signal may sound clean, so it is necessary to check far below the operating frequency. Two transistor characteristics combine to cause this trouble. First, transistors have higher gain at lower frequencies than they do at hf. Second, interelement capacitances vary over a wide range of changes in voltage, the result being varactor action that causes spurious outputs. The best way to avoid the problem is to use a minimum of inductance in the collector circuit. Large chokes are unsatisfactory. Series feed is a good answer as no choke is needed. Bypass capacitors should be the minimum value required. Decoupling on power leads between stages should have at least two capacitors, one effective at the operating frequency and a second large capacitor that is good at low frequencies.

METERING

Fig. 6-31 shows how a voltmeter and milliammeter should be connected to read various voltages and currents. Voltmeters are seldom installed permanently, since their principal use is in preliminary checking. Also, milliammeters are not normally installed permanently in all of the positions shown. Those most often used are the ones reading grid current and plate current, or grid current and cathode current, or collector current.

Milliammeters come in various current ranges. Current values to be expected can be taken from the tube tables and the meter ranges selected accordingly. To take care of normal overloads and pointer swing, a meter having a current range of about twice the normal current to be expected should be selected.

Grid-current meters connected as shown in Fig. 6-31 and meters connected in the cathode circuit need no special precautions in mounting on the transmitter panel so far as safety is concerned. However, milliammeters having metal zero-adjusting screws on the face of the meter should be recessed behind the panel so that accidental contact with the adjusting screw is not possible, if the meter is connected in any of the other positions shown in Fig. 6-31. The meter can be mounted on a small subpanel attached to the front panel with long screws and spacers. The meter opening should be covered with glass or celluloid. Illuminated meters make reading easier. Reference should also be made to the TVI chapter of this *Handbook* in regard to wiring and shielding of meters to suppress TVI.

COMPONENT RATINGS

Output Tank Capacitor Voltage

In selecting a tank capacitor with a spacing between plates sufficient to prevent voltage breakdown, the peak rf voltage across a tank circuit under load, but without modulation, may be taken conservatively as equal to the dc plate or collector voltage. If the dc supply voltage also appears across the tank capacitor, this must be added to the peak rf voltage, making the total peak voltage twice the dc supply voltage. If the amplifier is to be plate-modulated, this last value must be doubled to make it four times the dc plate voltage, because both dc and rf voltages double with 100-percent amplitude modulation. At the higher voltages, it is desirable to choose a tank circuit in which the dc and modulation voltages do not appear across the tank capacitor, to permit the use of a smaller capacitor with less plate spacing.

Capacitor manufacturers usually rate their products in terms of the peak voltage between plates. Typical plate spacings are shown in the following table, 6-B.

Output tank capacitors should be mounted as close to the tube as temperature considerations will permit, to make possible the shortest capacitive path from plate to cathode. Especially at the higher frequencies where minimum circuit capacitance becomes important, the capacitor should be mounted with its stator plates well spaced from the chassis or other shielding. In circuits where the rotor must be insulated from ground, the capacitor should be mounted on ceramic insulators of size commensurate with the plate voltage involved and – most important of all, from the viewpoint of safety to the operator – a well-insulated coupling should be used between the capacitor shaft and the dial. *The section of the shaft attached to the dial should be well grounded.* This can be done conveniently through the use of panel shaft-bearing units.

Table 6-B

Typical Tank-Capacitor Plate Spacings

Spacing (In.)	*Peak Voltage*	*Spacing (In.)*	*Peak Voltage*	*Spacing (In.)*	*Peak Voltage*
0.015	1000	0.07	3000	0.175	7000
0.02	1200	0.08	3500	0.25	9000
0.03	1500	0.125	4500	0.35	11000
0.05	2000	0.15	6000	0.5	13000

Tank Coils

Tank coils should be mounted at least their diameter away from shielding to prevent a marked loss in Q. Except perhaps at 28 MHz it is not important that the coil be mounted quite close to the tank capacitor. Leads up to 6 or 8 inches are permissible. It is more important to keep the tank capacitor as well as other components out of the immediate field of the coil. For this reason, it is preferable to mount the coil so that its axis is parallel to the capacitor shaft, either alongside the capacitor or above it.

Wire Sizes for Transmitting Coils for Tube Transmitters

Power Input (Watts)	*Band (MHz)*	*Wire Size*
1000	28–21	6
	14–7	8
	3.5–1.8	10
500	28–21	8
	14–7	12
	3.5–1.8	14
150	28–21	12
	14–7	14
	3.5–1.8	18
75	28–21	14
	14–7	18
	3.5–1.8	22
25 or less*	28–21	18
	14–7	24
	3.5–1.8	28

* Wire size limited principally by consideration of Q.

There are many factors that must be taken into consideration in determining the size of wire that should be used in winding a tank coil. The considerations of form factor and wire size that will produce a coil of minimum loss are often of less importance in practice than the coil size that will fit into available space or that will handle the required power without excessive heating. This is particularly true in the case of screen-grid tubes where the relatively small driving power required can be easily obtained even if the losses in the driver are quite high. It may be considered preferable to take the power loss if the physical size of the exciter can be kept down by making the coils small.

Transistor output circuits operate at relatively low impedances because the current is quite high. Coils should be made of heavy wire or strap, with connections made for the lowest possible resistance. At vhf stripline techniques are often employed, as the small inductance values required for a lumped inductance become difficult to fabricate.

RF Chokes

The characteristics of any rf choke will vary with frequency, from characteristics resembling those of a parallel-resonant circuit, of high impedance, to those of a series-resonant circuit, where the impedance is lowest. In between these extremes, the choke will show varying amounts of inductive or capacitive reactance.

In series-feed circuits, these characteristics are of relatively small importance because the rf voltage across the choke is negligible. In a parallel-feed circuit, however, the choke is shunted across the tank circuit, and is subject to the full tank rf voltage. If the choke does not present a sufficiently high impedance, enough power will be abosrbed by the choke to cause it to burn out.

To avoid this, the choke must have a sufficiently high reactance to be effective at the lowest frequency, and yet have no series resonances near the higher-frequency bands.

A QRP RIG FOR 3.5 AND 7 MHz

This equipment is designed for low-power home and field use. It can be powered by an ac-operated supply, or from a battery pack. Power output is approximately 2 watts, a sufficient level to work stations hundreds of miles distant. This transmitter was originally designed to use conventional point-to-point construction methods. An etched-circuit version is offered here as an alternate for those builders wishing to use this newer method of construction.

Circuit Details

Referring to Fig. 2, Q1 operates as an untuned Pierce oscillator. It operates at low dc power level, 100 mW input. Any fundamental-type crystal from 1000 kHz to 14 MHz will oscillate readily when plugged in at Y1. Keying is accomplished by breaking the emitter circuit. Shaped keying results from the emitter-bias resistor, R3, and related bypass capacitors. The note is free of clicks. Output from the oscillator is taken at low impedance to match the input impedance of Q2, the driver stage. A capacitive divider, C5 and C6, provides the desired tap point for the base of Q2. The 100-ohm resistor, R5, acts as a parasitic suppressor to help stabilize Q2. A .05-μF capacitor and a 100-ohm resistor are installed in the 12-volt supply lead between Q1 and Q2 to help isolate the two stages, thus preventing unwanted interstage coupling and the instability it can cause.

A small amount of bias is used on the base of the driver, Q2, to establish Class-B conditions. This was done to make it easier to drive than if the stage were operated Class C. The stage idles at approximately 5 mA and draws roughly 40 mA when the key is closed. A low value of inductance is used in the collector rf choke, RFC2, to provide a low value of dc resistance in that part of the circuit. The current drawn by the collector in power amplifier circuits may cause an excessive voltage drop across most standard chokes, such as the 2.5 mH type. The low value of inductance is adequate in this type of circuit because of the low collector load impedance – about 150 ohms in Q2's case. A reactance value of approximately 10 times the collector impedance was selected for use at RFC2, and this is a good rule of thumb to follow. A 10-ohm emitter-bias resistor is used at Q2. It is not bypassed so that some degenerative feedback will occur, thus enhancing the stability of the driver stage. A toroidal inductor is used in the collector of Q2. With S1A in the 7-MHz position it is tuned to resonance by means of a 220-pF fixed capacitor. On 80 meters, S1A adds an 820-pF capacitor across L1 to provide mid-band resonance. Uniform output is available across both bands, and no tuning control is necessary. Since the toroidal inductor is self-shielding, stray interstage coupling is minimized – a further aid to transmitter stability. Output to Q3 is taken from a link, L2, wound over L1 and the toroidal core. Power-lead decoupling is provided by RFC3 and a .05-μF capacitor. The power output from Q2 is approximately 100 mW.

Fig. 1 — This version of the solid-state transmitter is housed in a small recipe box. All controls and jacks are accessible from the top panel.

Output Section

An RCA 2N2102 is used in the output stage of the QRP transmitter, at Q3. A heat sink should be attached to it to prevent damage from excessive heating.

A 1.5-ohm emitter-bias resistor is used at Q3 to offer protection against thermal runaway. The stage operates essentially Class C and uses no forward bias. It was necessary to connect a 0.1-μF bypass capacitor from emitter to ground to clean up a low-frequency oscillation which appeared. Because of the low collector load impedance for Q3, approximately 40 ohms, RFC4 needs to be only 25 μH to present sufficient reactance at the lowest operating frequency. An iron-core choke was selected to obtain the least amount of dc resistance in the collector supply lead. Individual double pi-section tanks are used in the collector of Q3 to provide maximum harmonic rejection. Band selection is accomplished by the remaining section of S1 (S1B). Separate antenna connectors are used, J2 and J3, to eliminate the need for switching in that part of the circuit. *Do not connect an antenna to the unused jack during operation.*

A Zener diode, CR1, is used to prevent destruction of the PA transistor during periods when the antenna SWR is high, or when through error no load is connected to the output of the transmitter. CR1 is shown in series with the dc at the collector of Q3. It is rated at 39 volts, 1 watt. It will conduct when the positive half of the rf cycle rises to 36 volts or higher, and will also conduct should a dc spike of 36 volts or greater

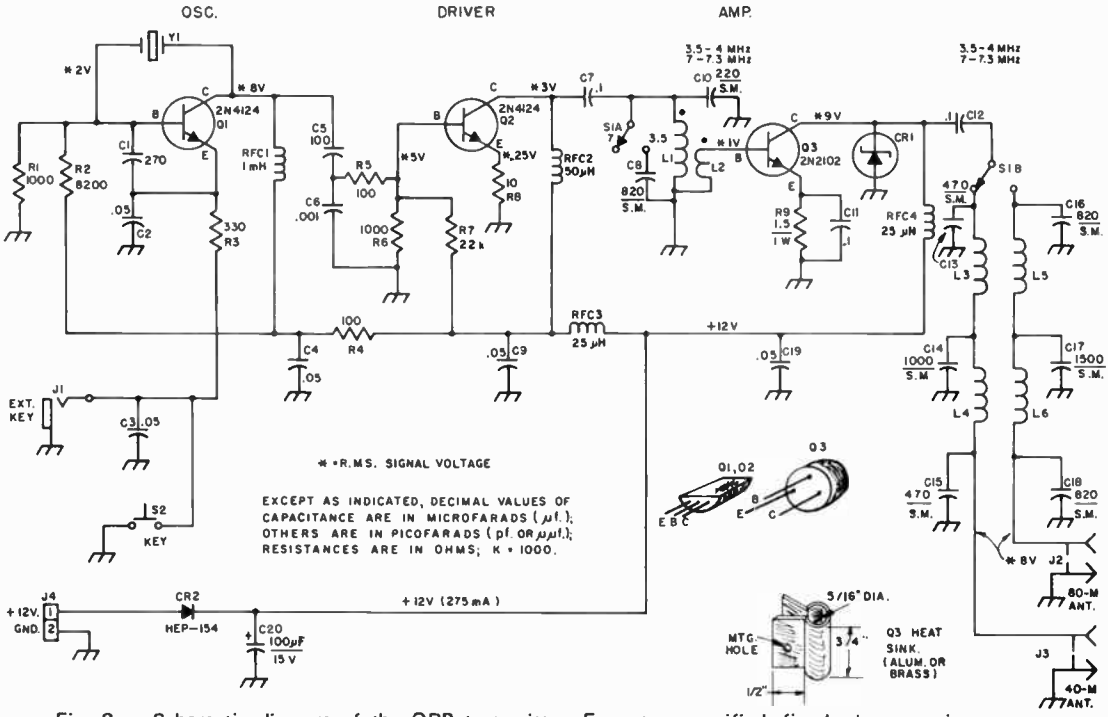

Fig. 2 — Schematic diagram of the QRP transmitter. Except as specified, fixed-value capacitors are low-voltage disk ceramic; polarized capacitors are electrolytic; SM = silver mica. Resistors are 1/2-watt composition. Voltages marked with an asterisk are rms rf (see text). Component identifiers not appearing in the parts list are for identification purposes on the etched-circuit board layout.

C1 — Feedback capacitor (value may require changing for best results from transistor used, depending on beta of Q1).
C5, C6 — For text discussion.
CR1 — 39-volt, 1-watt Zener diode (Sarkes Tarzian VR-39 or equiv.).
CR2 — Silicon, 50 PRV at 2 amperes (Motorola HEP-154 suitable).
J1 — Phone jack, open-circuit type.
J2, J3 — Phono jack.
J4 — Two-terminal male connector (microphone connector used here).
L1 — 2 μH; 25 turns No. 24 enam. space-wound to occupy entire Amidon T-50-2 toroid core.[1]
L2 — 12 turns small-guage insulated hookup wire wound over entire length of L1. Wind in same sense as L1.
L3, L4 — 13 turns No. 20 enam. wire to occupy entire Amidon T-68-2 toroid core (1 μH).
L5, L6 — 2 μH; 18 turns No. 20 enam. to occupy entire Amidon T-68-2 toroid core.
Q1, Q2 — 2N4124.
R2, R7 — Bias resistor. (Value may require modification for best results from transistor used, depending upon beta of Q1 and Q2.)
R5 — Parasitic-suppressor resistor. (May be omitted if stable operation of Q2 exists without it.)
RFC1 — 1-mH rf choke (Millen subminiature J300-1000 suitable. James Millen Mfg. Co., 150 Exchange St., Malden, MA.)
RFC2 — 50-μH rf choke (Millen 34300-50).
RFC3, RFC4 — 25-μH rf choke (Millen J-300-25).
S1 — Momentary spst push-button switch (Switchcraft 951 suitable).
S2 — Dpdt slide switch.
Y1 — 3.5 or 7-MHz crystal.

ride in on the 12-volt line. Under normal conditions the peak rf swing on the collector will not exceed twice the supply voltage value (24 volts), so the Zener diode will not conduct. The heat sink on Q3 protects the transistor from thermal damage.

Each PA tank is fixed-tuned for the center of its band. No tuning controls are required since uniform output can be expected across each of the bands. The constants have been chosen for a 50-ohm transmitter output impedance, though anything between 30 and 75 ohms can be used as a load without significant loss in output. Silver-mica capacitors are used in the tanks of Q2 and Q3 since they are more stable than disk ceramic types. Disk ceramic capacitors can be substituted, but their values should be checked on a capacitance meter before installing them in the circuit. Use only those capacitors whose values are within 10 percent of the values given in Fig. 2. The turns on the toroidal inductors can be spread or compressed slightly to provide a peak in output at the center of the band. Spreading the turns decreases the inductance; compressing them increases it. Collector current for Q3, with excitation applied, will run between

[1] Amidon cores are available from Amidon Associates, 12033 Otsego St., N. Hollywood, CA 91607.

200 and 230 mA when a 50-ohm load is connected to the antenna terminal. Since some transistors of a given type number will have different beta values than others, the actual current drawn will vary accordingly. (The higher the beta of a particular transistor, the higher will be the current.) Low current readings will be the result of low base drive to Q3, low supply voltage, or low beta at Q2 or Q3.

A polarity-guarding diode, CR2, is connected in series with the B plus from J4. Should the operator inadvertently cross-polarize the supply voltage the diode will prevent the current from flowing through it. Only plus voltage will pass through CR2. Supply voltage of the wrong polarity (minus) will destroy the transistors almost immediately. A 100-μF capacitor bypasses the 12-volt line. It bypasses the battery pack when dry cells are used, thus providing an ac ground for the circuit.

Construction Information

This equipment is housed in a recipe file box which measures 3 X 3 1/2 X 5 inches. A home-made chassis and panel were formed from aluminum sheet. Copper, brass, or even galvanized furnace ducting can also be used if available. Point-to-point circuit wiring is used in this model, but etched-circuit construction might be more desirable to those who wish a neater layout.[2] Terminal strips are used at various points on the chassis for mounting the components. The circuits for Q1 and Q2 are built on the bottom of the chassis. Band switch S1 and the PA circuit are above the chassis. This method was used to aid in isolating the PA from the rest of the circuit. Q3 and its heat sink are mounted on a ceramic insulating post, but phenolic or other low-loss materials can be used instead.

S2 is a momentary push-button switch. It is installed as an emergency keying device in the event the operator forgets to take the regular key along on a field trip.

Coils L1 through L6 are wound on Amidon toroidal cores.[2] Each winding should have its turns equally spaced, and each winding should occupy the entire circumference of the core. L2 is wound over L1 and also covers the entire core. The L1-L2 assembly is bolted to the chassis by means of a 4-40 X 1-inch screw and flat washer. The covering on the wire used for L2 insulates the assembly from the chassis and from the metal washer. Tighten the screw only enough to hold the assembly securely in place.

Checkout and Operation

Stage-by-stage testing is recommended for best results. Temporarily disconnect Q2 and Q3 by unsoldering their base and collector leads from the circuit. Before doing this, however, it is a good idea to make an ohmmeter check for short circuits of the dc line. Using a VTVM, and measuring between the *circuit* side of CR2 and the chassis, a reading of 8 ohms is typical. Reversing the test prods should provide a reading of approximately 7000 ohms. Severe departures from these readings will indicate that a short circuit or an "open" exists. Next, insert a crystal for straight-through operation at Y1 (Q2 and Q3 disconnected) and apply operating voltage to the transmitter. With the key closed the signal should be audible on a receiver tuned to the crystal frequency. Keying should exhibit no clicks, and the cw note should be free of hum and chirp. Normal current for the oscillator is between 8 and 10 mA, key down.

After the oscillator is checked out the driver stage can be connected to the circuit. A No. 49 lamp can be used as a load across L2. With operating voltage applied, and with the key closed, the lamp should light to nearly full brilliance. Next, reinstate Q3 and connect a No. 47 lamp to J2 or J3, depending upon the operating frequency. When the transmitter is keyed the dummy should light to normal brilliance, or slightly more. The cw note should remain clean throughout all of the tests. If it does not, chances are that instability exists somewhere in the transmitter. Check for defective ground connections or faulty bypass capacitors if this happens. If the foregoing conditions are not met check the points shown on the schematic diagram (marked with an asterisk) for proper rms rf voltage. The readings given were obtained with a Heath VTVM and a Heath rf probe. The probe diode was connected for minus polarity. The voltage readings should provide the clue needed for locating the trouble. Voltage

[2] A scale template and parts location guide is available from ARRL for 50 cents and a s.a.s.e.

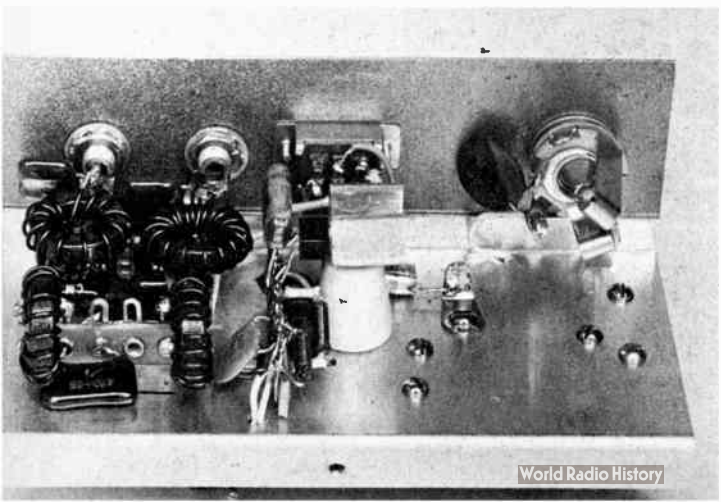

Fig. 3 — Looking at the top of the chassis, L3 and L4 are at the far left, flanked by L5 and L6 to their immediate right. RFC3 and RFC4 are mounted on a terminal strip in the center foreground. Q3 (2N2102) and its heat sink are mounted atop a ceramic post at the center of the chassis. S1 is visible behind Q3, mounted on the back side of the panel. J1 is at the far right. The hole in the rear lip of the chassis is for a sheet-metal screw which holds the chassis to the bottom of the file-box cabinet.

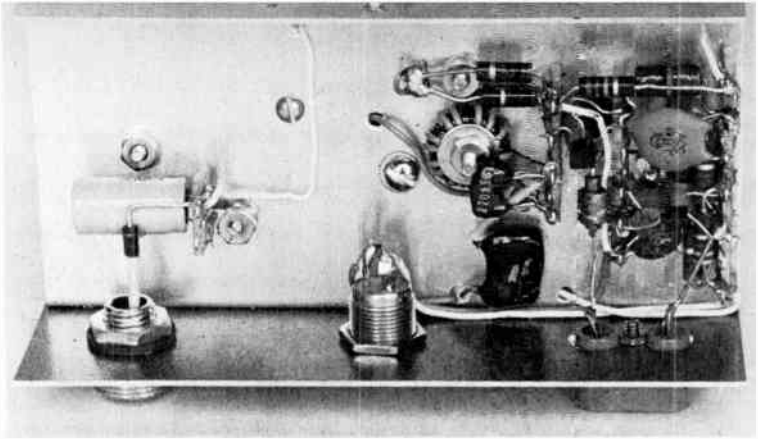

Fig. 4 — In this bottom-chassis view of the transmitter, Q1, Q2 and their associated circuits are grouped at the right of the chassis. The components are mounted on terminal strips. Assembly L1L2 is near the center of the chassis and is held in place by means of a nut, screw and washer. S2 is at the lower center, and J4 is at the far left.

readings and transmitter performance should be the same for both bands. Some crystals — especially older war surplus types — may be somewhat sluggish. If so, the cw note may sound chirpy.

If VFO operation is desired either of the two solid-state VFOs described in this chapter followed by an amplifier, could be used to excite the transmitter. The socket for Y1 would become the VFO jack. C1 would be removed from the circuit, but no other changes should be required. If keying the first stage of the transmitter causes the VFO to chirp because of "pulling," it may be necessary to move the keying line to the emitter of Q2 to provide further isolation between the keyed stage and the VFO. The VFO output should be between 5 and 10 volts (rms) for proper drive to Q1.

This transmitter can be powered by 10 size-D flashlight cells — series-connected, from the cigar-lighter receptacle of any negative-ground 12-volt auto, or from an ac-operated 12-volt supply of the type described in the Power Supply chapter. This circuit will perform satisfactorily using any supply voltage from 9 to 15. At 15 volts, power output will be approximately 3 watts.

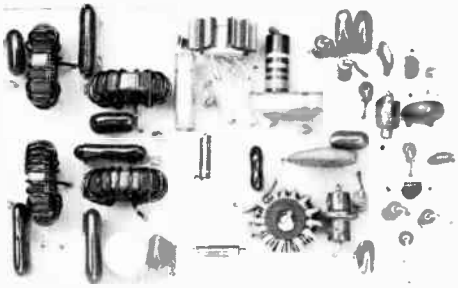

Fig. 5 — The circuit of Fig. 2 can be built on an etched-circuit board as shown here. Q1 and Q2 are located at the far right of the board. Q3 is at the top-center, and is crowned by a Motorola HEP-502 chassis-mount heat sink. Assembly L1L2 is visible at the lower center. Board dimensions are 4 5/8 X 2 3/4 inches, small enough to fit into the recipe box shown in Fig. 1.

A 10-WATT ONE-TUBE TRANSMITTER

The transmitter shown was designed with two objectives in mind: (1) to have good keying characteristics; and (2) to be as simple to duplicate as possible. The 6T9 is a dual tube consisting of a triode and a pentode. In this circuit the triode portion is the oscillator; the pentode half is the amplifier. While the rig is primarily for the Novice 80- or 40-meter operator, the transmitter will also work on 160 and 20 meters. Input power to the amplifier is on the order of 10 watts, and the measured rf output on the four bands is between 6 and 7 watts.

Circuit Details

A crystal-controlled Pierce oscillator circuit is used with the triode portion of the tube. Output from the oscillator is fed to the pentode section of the 6T9. A pi-network PA tank, designed to work into 50- and 70-ohm loads, is employed in the output of the transmitter. Plug-in coils are used to provide the desired band coverage. Fundamental-

Fig. 1 — This is the completed transmitter for 160- to 20-meter operation. The plate tuning control is at the upper right, and just below, the loading capacitor, C2.

frequency crystals are required with the transmitter. The term "fundamental" means that the crystal frequency is the same as the desired output frequency. The transmitter will also cover 160 and 20 meters.

Cathode keying is used in the transmitter. When the cathodes of the 6T9 are opened by the key, no current flows through the tube; consequently, no signal is generated. When the key is closed, the cathodes are grounded, the tube conducts, and a signal is generated and amplified. Components C4 and R1 work together as a filter which shapes the signal to eliminate clicks.

The power supply is shown in Fig. 3. It uses a full-wave rectifier. Filtering is provided by C3, a 100-μF capacitor.

Construction Details

The transmitter is built on a 7 X 7 X 1-inch aluminum chassis. The panel measures 5 1/4 X 7 inches. The top cover is 8 inches long, 5 3/8 inches high, and 7 inches wide. Both the panel and top cover can be made from cookie-sheet aluminum. A small opening is made in the top cover, directly over the tube, to provide ventilation. This opening, which is 1 1/2 inches in diameter, is covered with perforated aluminum stock.

Layout of the components is not particularly critical. However, if this is your first construction project, study the Construction Techniques chapter in this *Handbook* describing soldering and wiring techniques.

Always keep this in mind when working on radio gear: operating voltages in equipment can be *lethal*. When working on the transmitter make sure that the ac connector is unplugged from the power line. Also, before reaching into the gear, take a screwdriver with an insulated handle and short the positive lead of C3 to chassis ground. Electrolytic capacitors can hold a charge. The safest procuedre is to discharge them each time you work on the rig.

The coils are mounted on Millen plugs, then plugged into a Millen jack-bar. If one-band operation is planned, it would be a simple matter to wire the coil in place permanently, thus saving the cost of the plug and jack bar. On 160 and 80 meters, more output capacitance is required at C2. Fig. 3 shows the connections for these two bands when using plug-in coils.

Testing

When the rig is ready for testing, use a 10-watt, 117-V lamp as a dummy load. Connect a short wire from the screw-base shell of the lamp to the transmitter chassis, and another short lead from the bulb base terminal to J3. Plug a key and crystal into the rig and turn on the power. Let the transmitter warm up for three minutes. Tighten the screw on C2 (maximum capacitance setting). Close the key, then adjust C1 for a resonance indication on M1. The indication will occur when the meter current dips to a low value. Also, you should observe a glow in the dummy-load lamp. Gradually decrease the capacitance of C2 by loosening the screw. The plate-current reading should increase. Then, retune C1 for a dip. Alternately adjusting C1

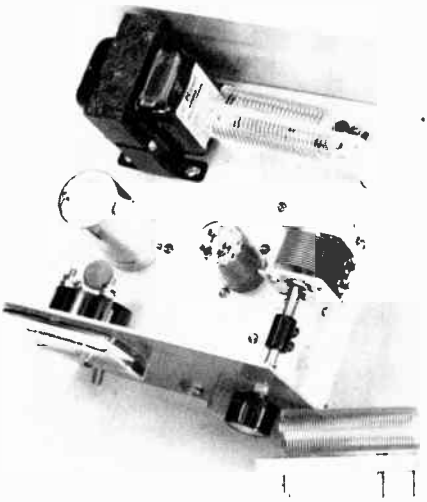

Fig. 2 — The plug-in coil is at the upper right. The 6T9 and the plate tuning capacitor, C1, are immediately to the front of the coil.

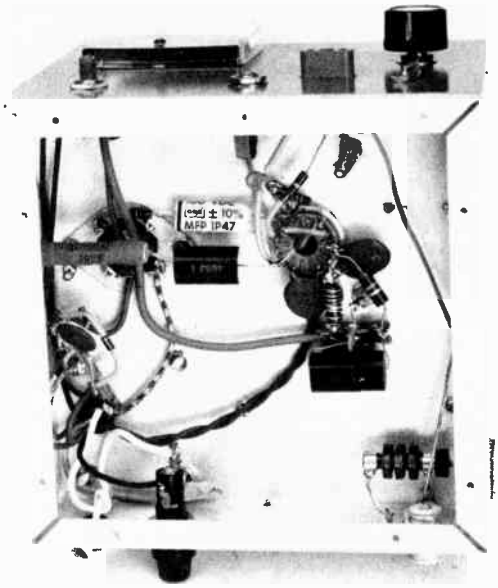

Fig. 4 — This shows the component arrangement below deck. The power supply rectifiers are mounted on a terminal strip at the left. The tubular black units are rf chokes.

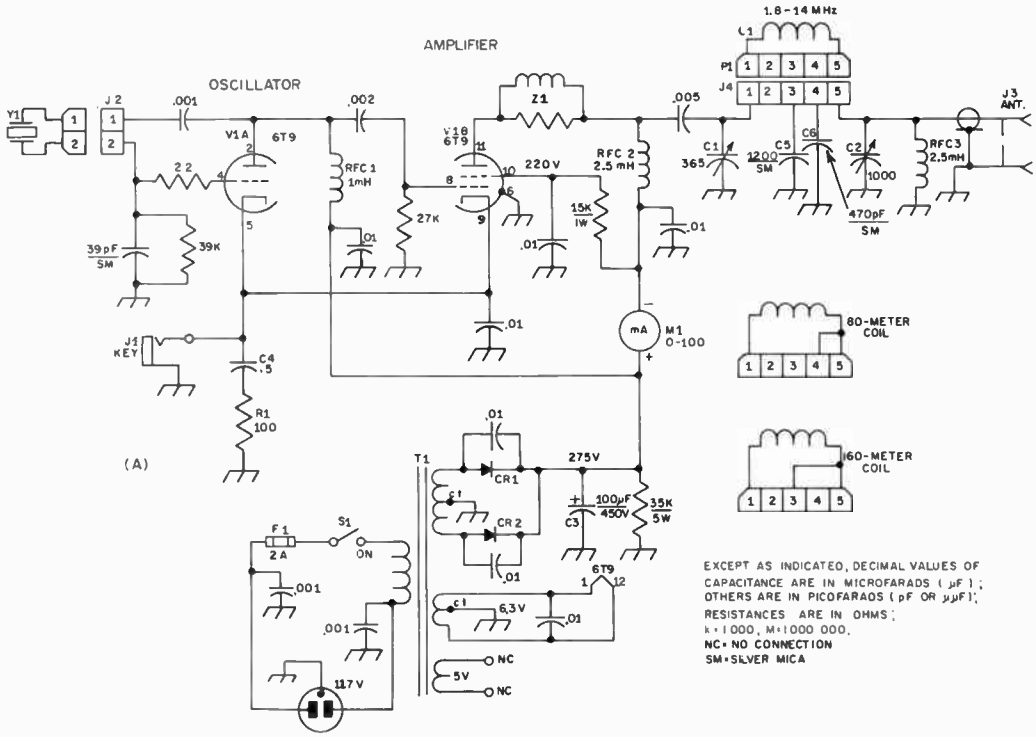

Fig. 3 — Circuit diagram of the 6T9 transmitter. Resistors are 1/2 watt unless otherwise stated. Capacitors marked with polarity are electrolytic.

C1 — 365-pF air variable (Miller No. 2111 or similar).
C2 — 360 to 1000-pF padder (Miller No. 160A or similar).
C3 — 100-µF, 450-volt electrolytic.
C4 — 0.5-µF paper.
C5 — 1200-pF silver mica.
C6 — 470-pF silver mica.
CR1, CR2 — 1000-volt PRV, 750-mA silicon rectifier.
F1 — 2-amp, 3AG fuse.
J1 — Open-circuit key jack.
J2 — Crystal socket.
J3 — Coax chassis fitting, type SO-239 or phono jack.
J4 — Coil jack bar (Miller 41305).
L1 — 160 meters, 48 turns No. 24, 32 turns-per-inch, 1 inch dia. (B&W Miniductor 3016). 80 meters, 43 turns No. 20, 16 turns-per-inch, 3/4 inch dia. (B&W Miniductor 3011). 40 meters, 30 turns No. 20, 16 turns-per-inch, 3/4 inch dia. (B&W Minidcutor 3011). 20 meters, 19 turns No. 18, 8 turns-per-inch, 3/4 inch dia. (B&W Miniductor 3010).
M1 — 100-mA meter.
P1 — Coil plug (Miller 40305).
RFC1 — 1-mH rf choke (Miller 4652-E or similar).
RFC2, RFC3 — 2.5-mH rf choke (Miller 4666-E or similar).
S1 — Spst toggle.
T1 — Power transformer, 470 volt center-tapped, 40 mA, 6.3 volt, 2A, 5 volt, 2A (not used).
Z1 — 7 turns No. 16 wire, space-wound on a 100-ohm, 1-watt carbon resistor.

and C2 should bring the plate current up to about 40 mA at dip, and the lamp should light nearly full brilliance. The transmitter is designed to work into 50- and 70-ohm loads, but slightly higher or lower impedances can be matched.

A simple antenna that will work with this rig is an end-fed wire. Make the antenna one-quarter wavelength long or an *odd* multiple of a quarter wavelength (65 feet on 80 meters, or 33 feet on 40 meters). Any odd multiple of a quarter wavelength will require low-impedance feed, and should work with the pi-network tank in the transmitter. Bring one end of the antenna directly to the output connection on the rig and install the other end of the antenna as high as possible. Ideally, however, the antenna should be a half-wave dipole cut for the band of operation, and erected as high above ground as possible. Alternatively, a center-fed Zepp antenna can be used with a tuner (Transmatch) to provide multiband operation with a single antenna. Information on numerous suitable antennas for the hf bands is given in *The ARRL Antenna Book* and in Chapter 21. The simple antenna described in the foregoing text may not provide optimum results.

Many operators may feel that they need more than 10-watts input to make contacts. However, this little right will provide plenty of long-haul action with practically any antenna system.

A 75-TO 120-WATT CW TRANSMITTER

The transmitter shown in Fig. 1 is designed to satisfy the cw requirements of either a Novice or higher-class licensee. The PA stage will operate at 75-watts dc input for the Novice. The rig provides station control and other operating features. Holders of General Class or higher licenses can run up to 120-watts dc input. A SPOT position is provided on the FUNCTION switch which permits identifying the operating frequency in a band. The transmitter has been designed for ease of assembly, with the beginner in mind.

The circuit diagram of the transmitter (Fig. 2) shows the oscillator tube, V1, to be a 6GK6. This pentode works "straight through" on some bands while multiplying in its plate circuit on others. An 80-meter crystal will develop either 80- or 40-meter energy in the subsequent stage (6146B) grid circuit, depending on the setting of S2 and C1. Similarly, a 40-meter crystal will permit the oscillator to drive the final tube on 40, 20, 15 and 10 meters. The final amplifier is always operated straight through for maximum power output. Since the amount of excitation will vary with the degree of frequency multiplication, a screen-voltage-adjustment control, R1, is included.

To insure stability, the 6146B amplifier is neutralized. This is done by feeding back a small amount of the output voltage, (out of phase) to the 6146B grid through C2. The adjustment of this circuit is described later. Provision is included to measure the grid and cathode current of the amplifier stage. With the 6146B it is important to insure that the grid current is kept below 3 mA at all times; *high grid currents will ruin the tube in short order.* The meter, which has a basic 0-1-mA movement, uses appropriate multiplier and shunt resistors to give a 0-10-mA scale for reading grid current, and 0-250 mA for monitoring plate current.

The plate tank for the final amplifier uses the pi-section configuration for simple band switching. This network is tuned by C3, and C4 provides adjustment of the antenna coupling. The pi-network also assures excellent suppression of harmonics when properly terminated, typically 35 to 45 dB. All connection points to the transmitter are filtered to "bottle up" harmonic energy, which, if radiated, could cause television interference.

Silicon rectifiers are used in the "economy" power supply. A center-tapped transformer with a bridge rectifier provides all of the operating voltages for the transmitter. Depending upon the line voltage, the high-voltage supply will deliver about 750 volts, key up, dropping to about 700 volts under load. If the line voltage is above 120, these figures will be increased by about 50 volts. The screen supply to the 6146B is regulated by two OB2 VR tubes.

The FUNCTION switch turns the transmitter on and selects the spot, tune or operate modes. Leads from this switch are brought out to the rear deck of the transmitter to mute the station receiver and key the antenna relay. Thus, S1 provides one-switch transmit-receive operation. In the OPERATE position, the oscillator and amplifier are keyed simultaneously by grounding the common cathode circuit. A *RC* network across the cathode line is included to shape the keying, thus preventing key clicks.

Construction

An 11 X 7 X 2-inch aluminum chassis (Bud AC-407) is used as the base for the transmitter. A homemade aluminum U shield encloses the final amplifier. The chassis is fitted with an 11 X 7-inch front panel which is cut from sheet aluminum. The panel is held to the chassis by the switches and panel bushings common to both units. Correct placement of the various parts can be determined by viewing the photographs. Only an experienced builder should try to relocate the major components. The rf compartment has 3/4-inch mounting lips bent along the back side and the ends to give a finished size of 5 X 8 3/4 inches. This rear housing is held to the chassis and front panel with 6-32 hardware, and a perforated metal cover is fastened to it with No. 6 sheet-metal screws.

Fig. 1 — This 120-watt cw transmitter can be operated at 75-watts dc input for Novice-band use. The slide switch puts the meter in the grid or cathode circuit of the 6146B amplifier. Directly to the right of the slide switch is the FUNCTION switch and crystal socket. Continuing at this level, farther to the right is the GRID TUNING, grid BAND SWITCH, and the DRIVE level control. The controls to the upper right are the final BAND SWITCH, FINAL TUNING, and FINAL LOADING.

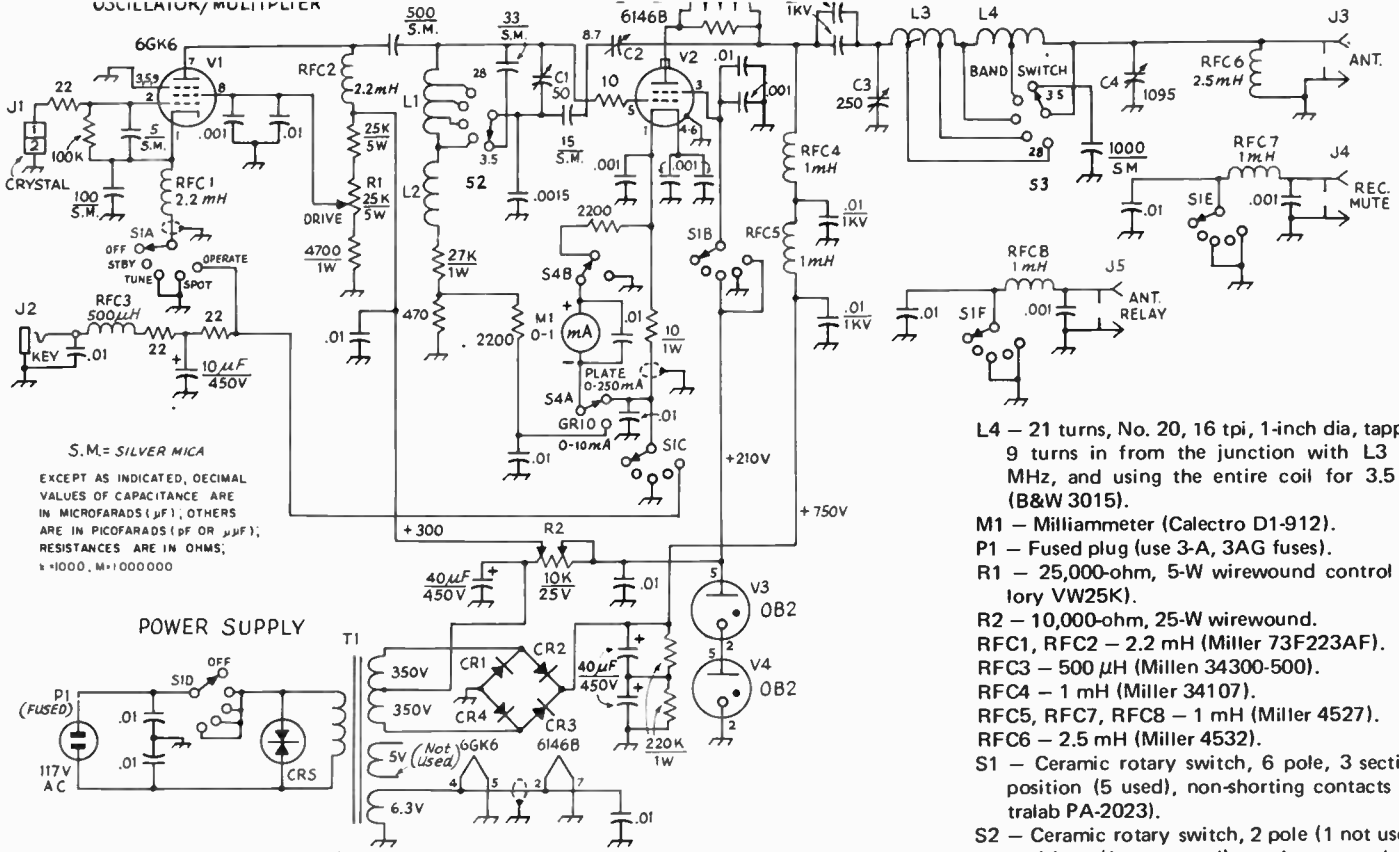

Fig. 2 — Circuit diagram of the 6146B transmitter. Capacitors with polarity marked are electrolytic, others are disk ceramic. Resistors are 1/2-watt composition.

C1 — Air variable (Hammarlund APC-50B).
C2 — Air variable (Johnson 160-104).
C3 — Air variable (Hammarlund MC250M).
C4 — Three-section broadcast variable, 365 pF per section, all sections connected in parallel (Miller 2113).
CR1-CR4, incl. — 1000-PRV, 1-A silicon.
CR5 — Transient suppressor (GE 6RS20SP4B4).
J1 — Crystal socket.
J2 — SO-239-style connector, panel mount.
J3, J4 — Phono connector, panel mount.
L1 — 37 turns, No. 20, 16 tpi, 3/4-inch dia, tapped at 4 turns from the tube end for 28 MHz, 6 turns for 21 MHz, 12 turns for 14 MHz, and using the entire coil for 7 MHz (B&W 3011).
L2 — 28 turns, No. 20, 32 tpi, 3/4-inch dia (B&W 3012).
L3 — 12 turns, No. 18, 8 tpi, 1-inch dia, tapped at 3 turns from the tube end for 28 MHz, 6 turns for 21 MHz, and using the entire coil for 14 MHz (B&W 3014).
L4 — 21 turns, No. 20, 16 tpi, 1-inch dia, tapped at 9 turns in from the junction with L3 for 7 MHz, and using the entire coil for 3.5 MHz (B&W 3015).
M1 — Milliammeter (Calectro D1-912).
P1 — Fused plug (use 3-A, 3AG fuses).
R1 — 25,000-ohm, 5-W wirewound control (Mallory VW25K).
R2 — 10,000-ohm, 25-W wirewound.
RFC1, RFC2 — 2.2 mH (Miller 73F223AF).
RFC3 — 500 μH (Millen 34300-500).
RFC4 — 1 mH (Miller 34107).
RFC5, RFC7, RFC8 — 1 mH (Miller 4527).
RFC6 — 2.5 mH (Miller 4532).
S1 — Ceramic rotary switch, 6 pole, 3 section, 6 position (5 used), non-shorting contacts (Centralab PA-2023).
S2 — Ceramic rotary switch, 2 pole (1 not used), 6 position (1 not used) section, non-shorting contacts (Centralab PA-2003).
S3 — Ceramic rotary switch 1 pole, 6 position (1 not used), non-shorting contacts (Centralab 2501).
S4 — Dpdt slide switch.
T1 — Power transformer, 117-volt primary, secondary 540 volts ct at 260 mA, and 6.3 volts at 8.8 A (Stancor P-8356).
Z1 — 7 turns of No. 16 wire on a 100-ohm, 1-W composition resistor.

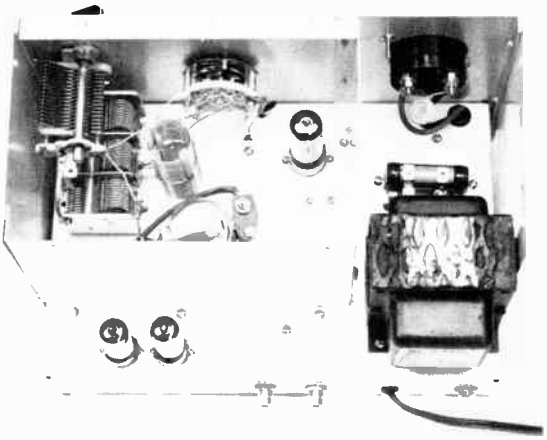

Fig. 3 — Top view with the perforated metal cover removed. The small capacitor beside the 6146B provides the neutralizing adjustment. L3 and L4 are mounted one above the other. The smaller tube inside the rf compartment is the 6GK6 oscillator.

The lead to RFC4 is routed through an insulated bushing. A small bracket supports a piece of Lucite which insulates C2, the neutralizing capacitor, from ground. Another bracket supports C1 and S2. C1 is above ground for rf and dc, so an insulated coupling (Millen 39016) is to be used on its shaft. Tie strips are used to support the small capacitors, resistors, and rectifier diodes.

The 5-volt winding of T1 is not used. Therefore, these leads should be cut and taped to avoid accidental contact with the chassis. The filter capacitors and bleeder resistors are mounted on tie strips. Care should be used in making all high-voltage connections to prevent accidental shorts from occurring. Also, don't omit the "spike prevention" Thyrector diode, CR5, as this unit protects the supply from transient voltage surges.

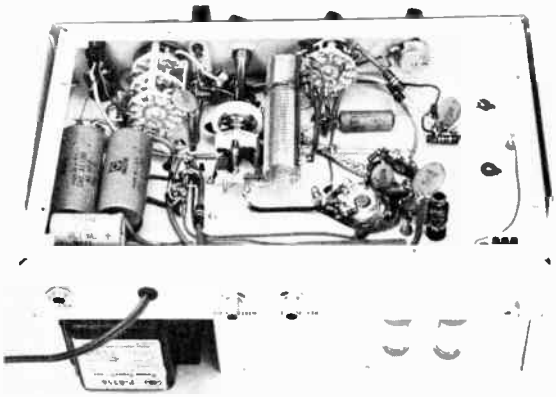

Fig. 4 — Looking inside the bottom of the transmitter, L1 and L2 are located at the center, next to the grid-tuning capacitor. All of the output jacks are spaced along the rear wall of the chassis. The bottom cover has been removed in this photograph. It should be kept in place during operation.

Adjustment

After the transmitter has been wired, check it a second time for possible wiring errors. Next, the two voltage-regulator tubes should be plugged in their sockets. With S1 at off, plug the line cord into a 117-volt outlet. When S1 is moved to STANDBY, the VR tubes should glow. The high voltage at RFC4 should measure about 750 volts. The oscillator voltage, checked at pin 7 of the 6GK6, should be close to 300 volts. If it is not, move the tap on R2 accordingly. *Make all measurements with care as these voltages are dangerous.* Then turn S1 to off and make certain the voltage drops to zero at RFC4, and at the 6GK6 socket. Normally, it will take at least a minute for the high voltage to drop to near zero (A fact which should be remembered during subsequent tests.).

Remove the line cord from the outlet — *never work on a transmitter unless the ac power is disconnected.* Install the tubes and connect the plate cap to the 6146B. Insert an 80-meter crystal in J1 and set both band switches to the 80-meter position. Set the FUNCTION switch to the tune position, and plug the power cord into the mains. After the tubes warm up, swing C1 through its range. If the oscillator stage is working, grid current will be read on M1. C1 should be used to peak the grid current. The total current drawn should be kept below 3 mA. Use the DRIVE control, R1, to set the drive level. Change S2 to the 40-meter position and confirm that the second harmonic of the crystal frequency can be tuned. With a 40-meter crystal in J1, it should be possible to obtain grid current with S2 set for 7, 14, 21 and 28 MHz. The maximum grid current obtainable on the higher-frequency bands will be somewhat less than on 80 and 40 meters (about 2.5 mA on 21 MHz, and 1.5 mA on 28 MHz). The latter value is not enough for full drive on the 10-meter band. The dc input power to the 6146B should be limited to 90 watts on 10 meters, and this operating condition will provide approximately 50 watts output. On the other bands 60 to 70 watts output will be possible. If an absorption wavemeter is available it is a good idea to check the setting of C1 for each band to insure that the tuned circuits are operating on the proper harmonic frequency. It may be possible to tune to an incorrect harmonic frequency, *which can lead to out-of-band operation.* Once the proper setting of C1 has been determined, mark the front panel so that this point can be returned to quickly when tuning up. Lacking a wavemeter, a receiver (with the antenna disconnected) can be used to check output on the various bands.

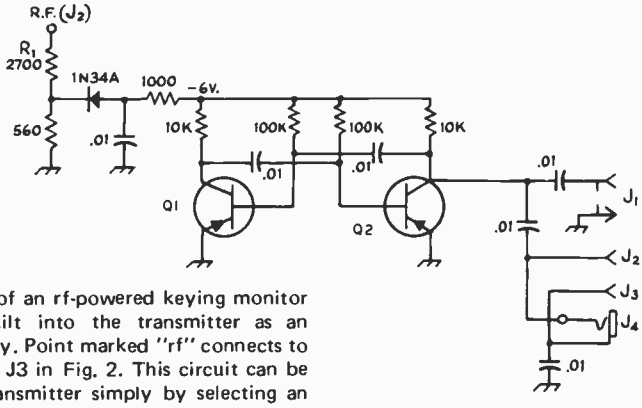

Fig. 5 — Circuit of an rf-powered keying monitor that may be built into the transmitter as an operating accessory. Point marked "rf" connects to the antenna jack, J3 in Fig. 2. This circuit can be used with any transmitter simply by selecting an input resistor, R1, that gives about −6 volts at the point shown. Only the desired output jacks need to be included.

J1 — Phono jack for audio output from the receiver.
J2, J3 — Tip jacks for headphones or receiver.
J4 — Phone jack for headphone connection.
Q1, Q2 — 2N406 or equivalent (pnp).

With S2 and S3 set for 15 meters, tune C1 for maximum grid current. Then, set the indicated value to about 2 mA with the DRIVE control. Set C4 at half scale, and slowly tune C3 while watching the grid-current meter. At the point which C3 tunes the tank through resonance, a dip in grid current will be seen, unless by chance the amplifier is already neutralized. A slow rate of tuning is required, as the indication will be quite sharp. When the dip has been found, adjust C2 until no dip can be noted, or, at least, the dip is less than 0.1 mA. All preliminary tests should be made as quickly as possible, as the transmitter is operating without a load, and extended operation can damage the final-amplifier tube.

When neutralization has been completed, and all circuits appear to be operating normally, connect a load to the transmitter. Preferably, this should be a 50-ohm dummy load, but a 100-watt light bulb will do. If an output indicator or SWR bridge is available, it should be connected between the transmitter and the load. The lamp is a fair output indicator on its own. Adjust the transmitter as outlined above for 2 mA of grid current on the desired band. With a key plugged in at J2, set C4 at full mesh, and switch S4 to read plate current. Watching the meter, close the key and adjust C3 for a plate-current dip. The dip indicates resonance. If the plate current dips below 150 mA, decrease the capacitance setting of C4, and again tune C3 for a dip. This dip-and-load procedure should be repeated until a plate current of 170 mA is reached at resonance. If the Novice 75-watt input limit is to be observed, the plate current at resonance must be held to 100 mA. This can be accomplished by using additional capacitance at C4.

If extended operation is planned at 75 watts or less input, it is advisable to reduce the screen voltage on the 6146B to insure that the rated screen dissipation rating of this tube is not exceeded. This can be done by using an OA2 in place of one OB2, jumpering the other VR-tube socket, and readjusting R2 so that the single VR tube draws about 25 mA. The OA2 will deliver 150 volts, regulated.

A HIGH-OUTPUT TRANSISTOR VFO

If a solid-state VFO is to be used with tube-type transmitters, it must have sufficient output to drive a crystal-oscillator stage as a doubler or tripler. Most of the Novice-class transmitters require 10-25 volts of rf to produce sufficient drive to succeeding stages. The VFO shown in Fig. 1 serves as a "crystal replacement" for the type of transmitter that uses a 6GK6, 6AG7, 12BY7 or similar tube in the oscillator. To provide sufficient output level, a two-watt amplifier is added to the basic transistor VFO. To reduce harmonic output and eliminate tuning of the amplifier stage, a fixed-value half-wave tank is used as the output circuit, followed by broadband rf step-up transformers. The VFO will develop 20 volts or more across a 5000- to 50,000-ohm load.

The basic VFO design was originally described in *QST*, June, 1970.

Circuit Data

In the circuit of Fig. 2 are two completely separate tuned circuits – one for 3.5 to 4.0 MHz, and one for 7 to 7.35 MHz. A split-stator broadcast-type variable, C3, is employed so that there is no need to switch a single tuning capacitor from one tuned circuit to the other. Also, the arrangement shown places the tuning-capacitor sections in different parts of the circuit for the two bands. The 7-MHz tuned circuit uses C3A from the junction of the feedback capacitor (C1 and C2) to ground. This gives the desired amount of

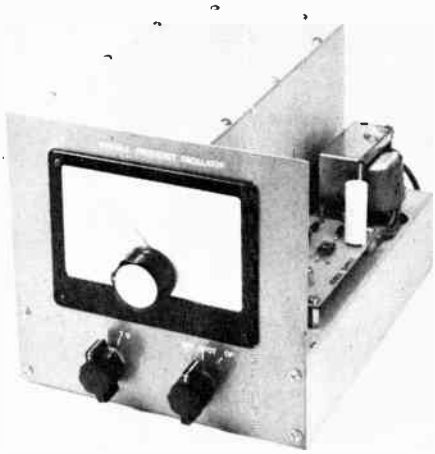

Fig. 1 — The two-band VFO. This unit operates on 3.5 to 4 and 7 to 7.3 MHz. Included is a 2-watt amplifier and broad-band rf transformers so that the VFO can drive tube-type transmitters directly.

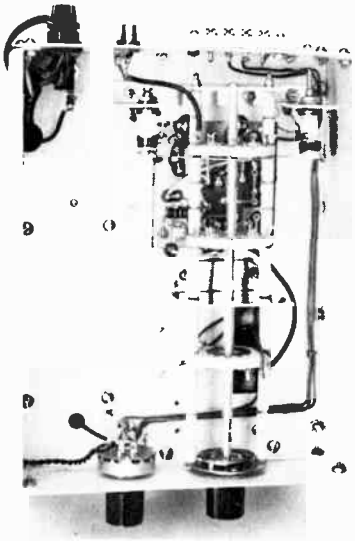

The bottom view of the VFO shows only the two switches and the output transformers — other components are mounted on the etched circuit boards "topside."

bandspread for 40-meter operation, but, when hooking the 80-meter tuned circuit up the same way, only 200 kHz could be covered with C3B. So, for 3.5 to 3.8-MHz operation, C3B is connected from the high-impedance point on L2 to ground.

It will be noted that a rather high value of *C* is used in parallel with each of the inductors, L1 and L2. This measure was taken to enhance the frequency stability of the VFO. By using a high *CL* ratio, small changes in the junction capacitance of Q1 have a less pronounced effect on the tuned circuit than would be experienced when using smaller values of capacitance. Silver-mica capacitors are used in the interest of good stability. So that the oscillator will start readily, despite the high *C* to *L* ratio, Q1 was chosen to have high beta and f_T. However, the high gain and frequency ratings caused the stage to be unstable at vhf — approximately 150 MHz. As C3 was tuned, vhf oscillations could be seen on the output waveform. The vhf energy was tunable, and it was found that the lead from Q1's base-blocking capacitor, C6, to the arm of S1A, was long enough to act as a vhf inductance, which was being tuned by C3. The addition of a 3-ferrite-bead choke, RFC1, mounted right at the circuit-board terminal for C6, cured the problem. Ideally, RFC1 would be mounted on the base lead of Q1, with the beads up against the transistor body. However, this is not always a practical method of mounting, so one should attempt to get the beads as close to the base connection as possible, thus minimizing the possibility of a vhf inductance being set up in that part of the circuit. To further discourage parasitic oscillations a collector resistor, R3, was included. It would be connected as close to the collector terminal of Q1 as possible, for the same reasons given when discussing RFC1.

Output from Q1 is taken across R4. Direct coupling is used between the low-impedance takeoff point of Q1 and the base of emitter-follower, Q2. Resistor R1 sets the forward bias of Q2 by picking some dc voltage off the emitter of Q1. Sufficient rf passes through R5 to drive Q2.

The collector of Q2 is bypassed for high and low frequencies to assure stability. A 100-ohm collector resistor, R2, decouples the stages at rf.

The drive signal for Q3 is taken from the emitter of Q2 through a small-value capacitor, C7. The larger the capacitance, the greater will be the available output voltage across a given load, but the smaller the capacitance value used, the better will be the VFO isolation from the succeeding circuit. One should use only the amount of capacitance that will provide adequate peak output voltage.

An RCA 2N2102 is used in the output amplifier. This transistor has a power rating of 5 watts, so it can be safely operated at two-watts dc input without a large heat sink. This stage operates Class C, using no fixed forward bias. A Zener diode, CR1, is used to prevent destruction of the transistor if the load is inadvertently removed. The PA tank is fixed tuned. The output is essentially flat over the 80- and 40-meter bands. The constants have been chosen for a 50-ohm output, so it is necessary to transform this impedance up to the high *Z* found at the transmitter tube grid. Separate tuned circuits, L10 and L12, are used for this purpose. The length of the connecting cable will affect the tuning of the output stage; with the values shown, a 36-inch length of RG-58/U should be used.

Construction Information

The VFO is built on a 9 X 7 X 2-inch chassis which is fitted with a 9 X 4 1/2 X 4 1/4-inch box

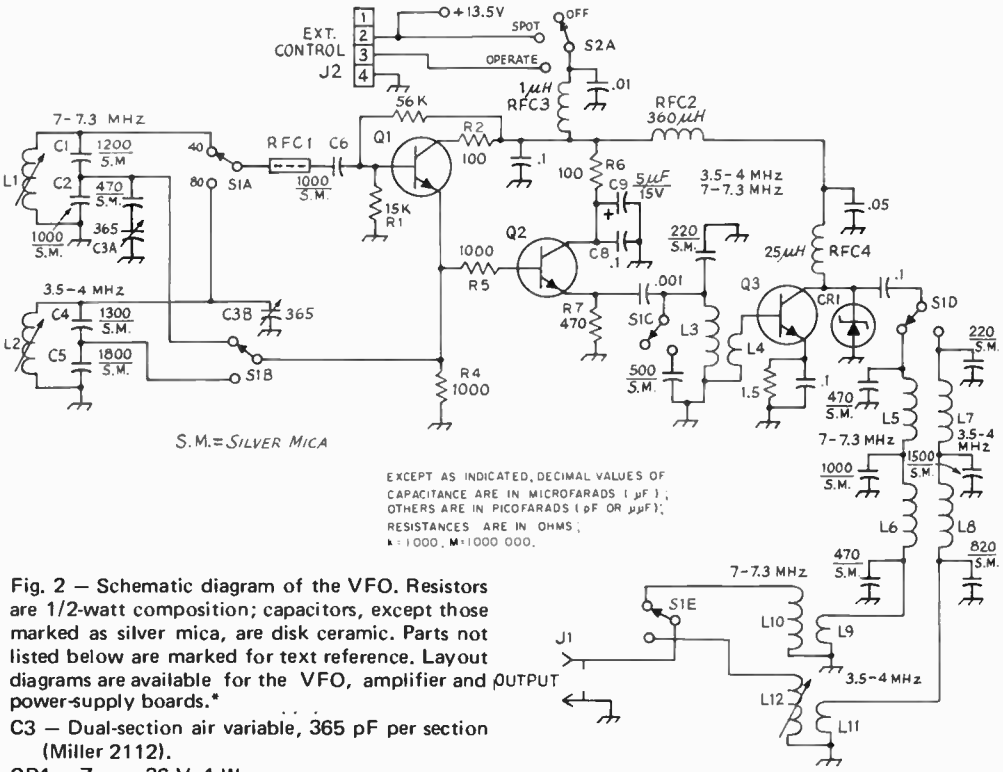

Fig. 2 — Schematic diagram of the VFO. Resistors are 1/2-watt composition; capacitors, except those marked as silver mica, are disk ceramic. Parts not listed below are marked for text reference. Layout diagrams are available for the VFO, amplifier and power-supply boards.*

C3 — Dual-section air variable, 365 pF per section (Miller 2112).
CR1 — Zener, 36 V, 1 W.
J1 — Phono connector, panel mount.
J2 — 4-terminal ceramic strip (Millen E-304).
L1 — 0.68-1.25 μH, slug tuned (Miller 42A106CBI).
L2 — 2.2-4.1 μH, slug tuned (Miller 42A336CBI).
L3 — 2 μH, 25 turns of No. 24 enam. wire on Amidon T-50-2 toroid core (Amidon Associates, 12033 Otsego Street, North Hollywood, CA 91607).
L4 — 12 turns No. 22 hook-up wire over L3.
L5, L6 — 13 turns of No. 20 enam. wire on Amidon T-68-2 core.
L7, L8 — 18 turns of No. 20 enam. wire on Amidon T-68-2 core.
L9 — 7 turns of No. 26 enam. wire over L10.
L10 — Approx. 3 μH, Miller 4405 with slug and 4 turns removed.
L11 — 7 turns No 26 enam. wire over L12.
L12 — 23 μH (Miller 4407).
Q1 — HEP-55.
Q2 — HEP-758.
Q3 — 2N2102.
RFC1 — Three Amidon ferrite beads on a 1/2-inch length of No. 22 wire. A 15-ohm resistor may serve as a substitute.
RFC2 — Miniature choke (Miller J300-360).
RFC3 — Miniature choke (Millen 34300).
RFC4 — 2.5 μH rf choke (Millen J300-25).
S1 — Home-assembled switch made from a Centralab PA272 kit and 3 Centralab RRD sections. (See Fig. 6-5).
S2 — Ceramic rotary switch, 2 pole, 3 position, one section, non-shorting contacts (Mallory 3223J).

* See *QST* for December, 1970.

to house the rf assemblies. The VFO circuit board is mounted on two brackets (Fig. 3). The amplifier etched-circuit board is mounted over a hole cut in the chassis. All components for the power supply (except the transformer) are mounted on a third circuit board, which is mounted on short stand-off pillars above the chassis. The power transformer is positioned on the right-rear side of the chassis.

S1 is a homemade assembly built from Centralab switch sections and parts. The mounting bushing supports the front end of the switch, and an aluminum L bracket supports the rear. The ceramic spacers supplied with the PA272 kit are used to separate the various wafers so that they are as close as possible to the circuits that they switch. A second switch, S2, turns the power supply on, as well as activating the VFO alone for zero-beating purposes. In operation, external connections are required from the station transmitter to J2 so that the VFO will come on simultaneously with the transmitter.

Adjustment

The power supply section should be tested before it is connected to the VFO. After the unit has been checked against the schematic diagram to

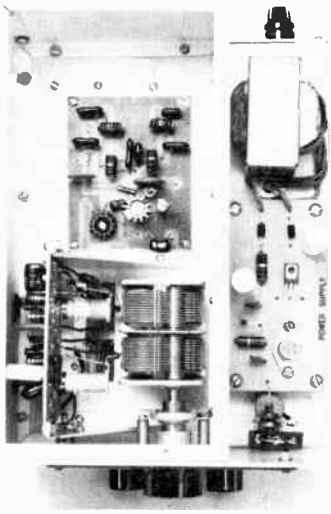

Fig. 3 – Top view, with the cover removed, of the rf compartment. The VFO board is mounted on two aluminum brackets. All leads from this circuit board should be made with heavy wire to minimize mechanical instability from vibration. The amplifier board is flush-mounted on the chassis. The dual-section broadcast variable is driven by a Miller MD-4 dial. L1 and L2 are adjusted through holes cut in the left side of the shielded compartment.

spot and correct any wiring errors, attach a voltmeter (VOM or VTVM) to the power-supply output. Plug P1 into a 117-volt outlet, and switch S2 to SPOT. The voltmeter should read approximately 13.5 volts. Then connect a 47-ohm, 2-watt resistor across the power supply output – the meter should continue to read the same voltage, even with the heavy load. If the power supply checks out correctly, remove the 47-ohm resistor and connect the supply to the VFO. With S1 set for 80-meter operation, tune a receiver across 3.5 to 4 MHz until the VFO signal is found. Then, check the 7-MHz range to see that the VFO is also operating in the 40-meter range. Connect a patch cable between the transmitter and the VFO. If a cable length other than the 36 inches is used, it may be necessary to add or subtract turns from L10 to achieve maximum drive to the transmitter. The slug in L12 should be set for maximum 80-meter drive to the following transmitter oscillator stage.

Once the entire VFO has been tested, the next step is calibration of the dial. With the plates of C3 set at about 95 percent of full mesh, adjust L1 for 7.0 MHz and L2 for 3.5 MHz. A receiver with a crystal calibrator, or a BC-221 frequency meter can be used during the dial calibration. *When using a VFO close to the band edge, always use some form of secondary frequency standard to insure in-band operation, in accordance with FCC regulations.* Once the calibration has been set, the VFO should again be connected to the transmitter, and a monitor receiver set up. In normal circumstances it is necessary to ground the antenna terminal of the receiver to prevent overload from the nearby transmitter. Even so, the signal heard from the receiver will be quite strong, so turn the rf gain control back until a moderately-strong signal is obtained. Then, key the transmitter and monitor the output signal with the receiver. The signal should be clean (free from hum, chirp and clicks). The VFO-transmitter combination should be checked on 80 through 10 meters in this manner.

It is also useful to zero beat the VFO against the crystal calibrator in the receiver. The VFO should be left on for 15 minutes or more, and the drift, as evidenced by a change in the beat note, should be less than 50 Hz on either fundamental range. Drift will be most noticeable on the 10-meter band, as any drift at 7-MHz will be multiplied by a factor of four in the transmitter. If excessive drift is found, it can usually be traced to a defective component. The process of finding such a troublesome part is time consuming; more often than not, a defective capacitor will be the cause.

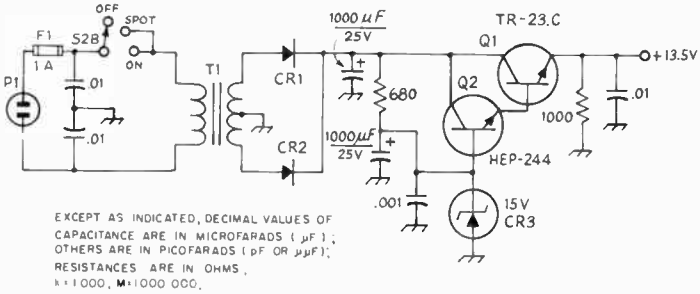

Fig. 4 – Power supply for the solid-state VFO. Capacitors with polarity marked are electrolytic, others are disk ceramic. Resistors are 1/2-watt composition.
CR1, CR2 – 100-PRV, 1-A silicon.
CR3 – Zener, 15 V, 1 W.
P1 – Fused plug (use 1-A, 3AG fuses).
Q1 – 40-watt npn power transistor (International Rectifier TR-23C).
Q2 – Motorola HEP-24.
S2 – See Fig. 2.
T1 – Filament transformer, 24 V ct at 1 A.

A 6-BAND TRANSMITTER FOR THE CW OPERATOR (T-9er)

Operating a transmitter and amplifier designed with cw as an afterthought can make cw very dull. Presented here is the T-9er, a hybrid circuit built with cw as the prime mode of service. Included are such features as full break-in, shaped keying, linear VFO calibration, T-R switch, built-in power supply, and a solid-state heterodyne conversion scheme. The PA stage uses a pair of 6146Bs and is capable of producing up to 240-watts input on 160 through 10 meters.

The Circuit

The VFO and buffer, Q1 and Q2 in Fig. 2, are an adaptation of a unit previously described in *QST*.[1] Q3, a second buffer, provides additional gain to assure adequate current to drive the base of the mixer, Q5. The VFO range is 5.0 to 5.2 MHz.

The heterodyne-frequency oscillator, Q4, operates at one of six crystal-controlled frequencies selected by the band switch. All of the crystals chosen oscillate at a frequency *above* the operating band. For this reason, the VFO dial tunes in the same direction on each band. CR13 is included to limit the oscillator voltage appearing at the mixer to 0.6.

Voltage from the VFO and HFO are coupled to the mixer, Q5, via C9 and C5, respectively. A tuned collector circuit operates at the *difference* frequency and provides a low-level signal to the driver stage, V1. The VFO actually tunes backwards with respect to the mixer output signal. The bottom edge of each amateur band corresponds to a VFO setting of 5.2 MHz.

A conventional grid-block system provides clickless, chirpless operation because neither oscillator is keyed. Q6 activates the mixer only when the key is depressed. The waveform transmitted is determined by R2 and C11 in the grid circuit of V1. Since the 6GK6 keys at a slightly slower rate than the mixer, any clicks generated in the earlier stages are not heard.

Voltage from the mixer is sufficient to power the driver to nearly full output on all bands. The plate circuit uses separate slug-tuned inductors for 160 through 20 meters. The 15- and 10-meter bands are covered with one coil. Neutralization of the 6GK6 is not required.

Output Circuit

A pi-network output circuit is employed with a pair of parallel-connected 6146Bs. Six 10-ohm resistors are connected between the cathodes and ground. Voltage developed across these resistors is used to indicate cathode current on the meter.

The amount of screen voltage is determined by the position of S3. When this switch is closed, the screen voltage is 150. Releasing S3 places R13 in series with the screen bus, lowering the voltage to 50. This lower voltage limits the transmitter input to approximately 60 watts. A neon lamp, DS2, has been included to indicate the position of S3. R15 and R16 form a voltage divider which allows ignition of DS2 during high screen-voltage conditions only.

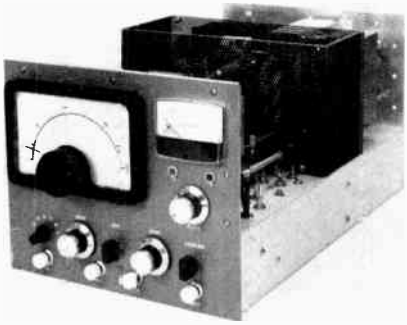

Fig. 1 — Front view of the cw transmitter. All metal work is done with sheet and cane-metal sections.

A T-R switch, V4, permits using the same antenna for transmitting and receiving. The theory and operation of this unit was described in an earlier *QST*.[2] An antenna relay is not required.

The operating conditions of the final-amplifier stage may be checked with the panel meter, M1. A 6-position switch allows monitoring of grid current, relative output, screen, plate and bias voltages, and cathode current.

The Power Supply

A silicon-diode full-wave bridge rectifier is used in the secondary of T1 to produce slightly over 1000 V dc during no-load conditions. Although this is somewhat high for 6146Bs, it has not shortened tube life. A choke-input filter is connected in the transformer center-tap lead to obtain 300 volts for powering the driver tube and the T-R switch. Sixteen volts of dc for operating the solid-state circuitry are obtained by rectifying and filtering the combined output of the two filament windings, which are connected in series. If the windings buck each other, producing no voltage, one set of leads should be reversed.

Final-amplifier screen and bias voltages are developed by T2. This part of the supply uses one half-wave rectifier for each voltage.

Construction

The transmitter is completely self-contained. It is built on a 10 X 17 X 3-inch chassis with an 8 1/2-inch-high front panel. Shielding is used between each stage and between each band-switch wafer as shown in the photograph. The final-amplifier section on top of the chassis is completely enclosed in a perforated aluminum shield. Small pieces of circuit board are soldered

[1] DeMaw, "Building a Simple Two-Band VFO," QST, June, 1970.
[2] Myers, "Stepping Up T-R Switch Performance," QST, December, 1967.

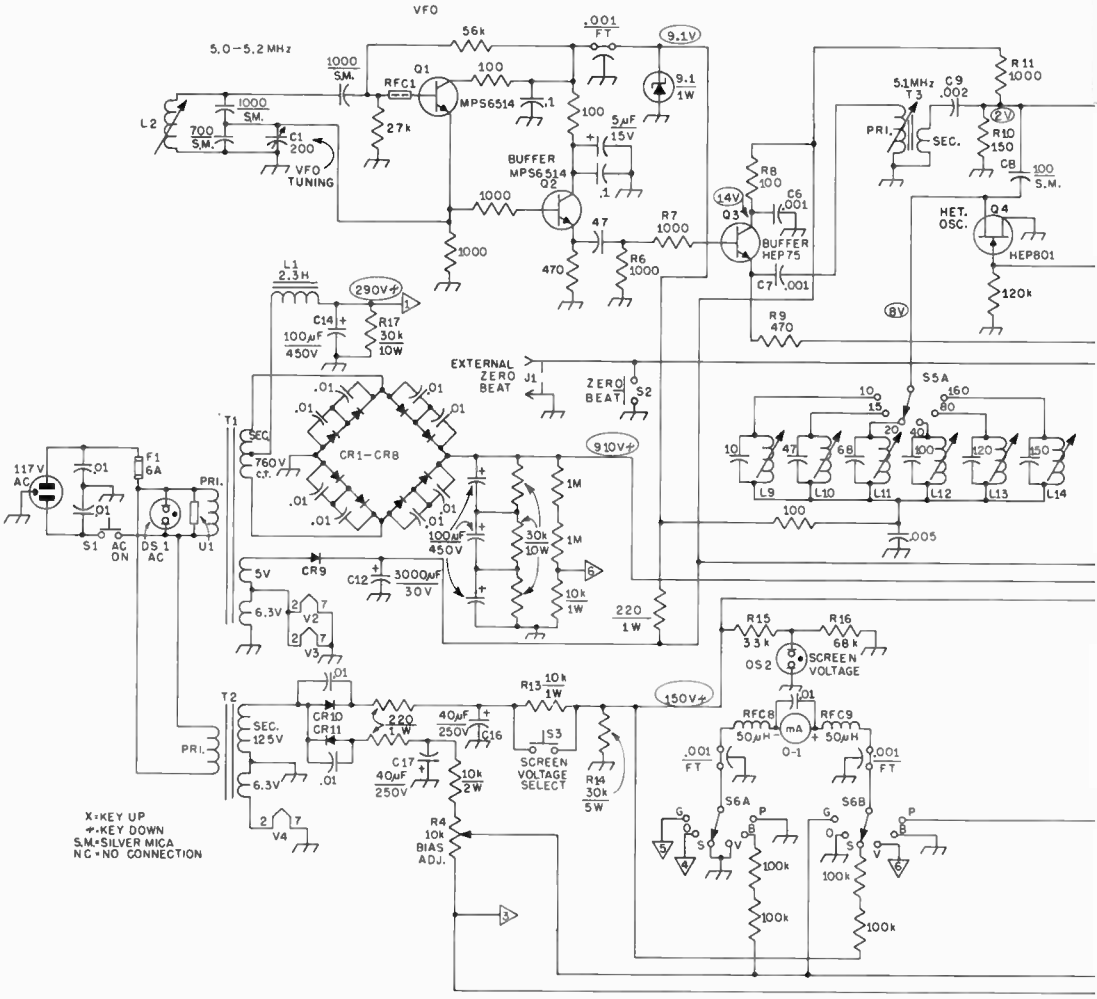

Fig. 2 — Circuit diagram for the T-9er. Component designations not listed below are for text reference.

C1 — 200-pF air variable (Hammarlund HFA-200A).
C2 — 100-pF air variable (Hammarlund MAPC-100B).
C3 — 300-pF air variable (Hammarlund RMC-325-S).
C4 — 1200-pF air variable (J. W. Miller 2113).
CR1-CR12, incl. — 100-PRV, 2.5-A (Mallory M2.5A or equiv.).
CR13 — Silicon small-signal switching diode (1N914 or equiv.).
DS1, DS2 — Neon indicator lamp, 117-V (Leecraft 32-211).
J1, J2 — Phono jack, single hole mount.
J3 — Coax chassis connector, type SO-239.
J4 — Open-circuit key jack.
L1 — 2.3-H filter choke (Stancor C-2304 or equiv.).
L2 — 2.2- or 4.1-µH slug-tuned inductor (J. W. Miller 42A336CBI).
L3, L16 — 1.0- to 4.1-µH slug-tuned inductor (J. W. Miller 42A156CBI). Both coils are rewound with the wire supplied: 3 turns spaced over a 3/4-inch length.
L4, L9, L10, L11, L15 — 1.0-µH slug-tuned inductor (J. W. Miller 21A106RBI).
L5 — 2.2- to 4.1-µH slug-tuned inductor (J. W. Miller 42A336BCI).
L6 — 1.6- to 2.7-µH slug-tuned inductor (J. W. Miller 21A226RBI).
L7, L8, L13, L14, L18, L19 — 6.8- to 8.5-µH slug-tuned inductor (J. W. Miller 21A686RBI).
L12, L17 — 1.5- to 1.8-µH slug-tuned inductor (Miller 21A156RBI).
L20 - 9 1/2 turns, 8 tpi, 1 1/2-inch dia tapped from tube end at 2 1/2 turns for 10 meters and at 4 3/4 turns for 15 meters (B&W 3018).
L21 — 38 turns, 6 tpi, 2-inch dia tapped from J3 end at 18 turns for 40 meters (B&W 3027).

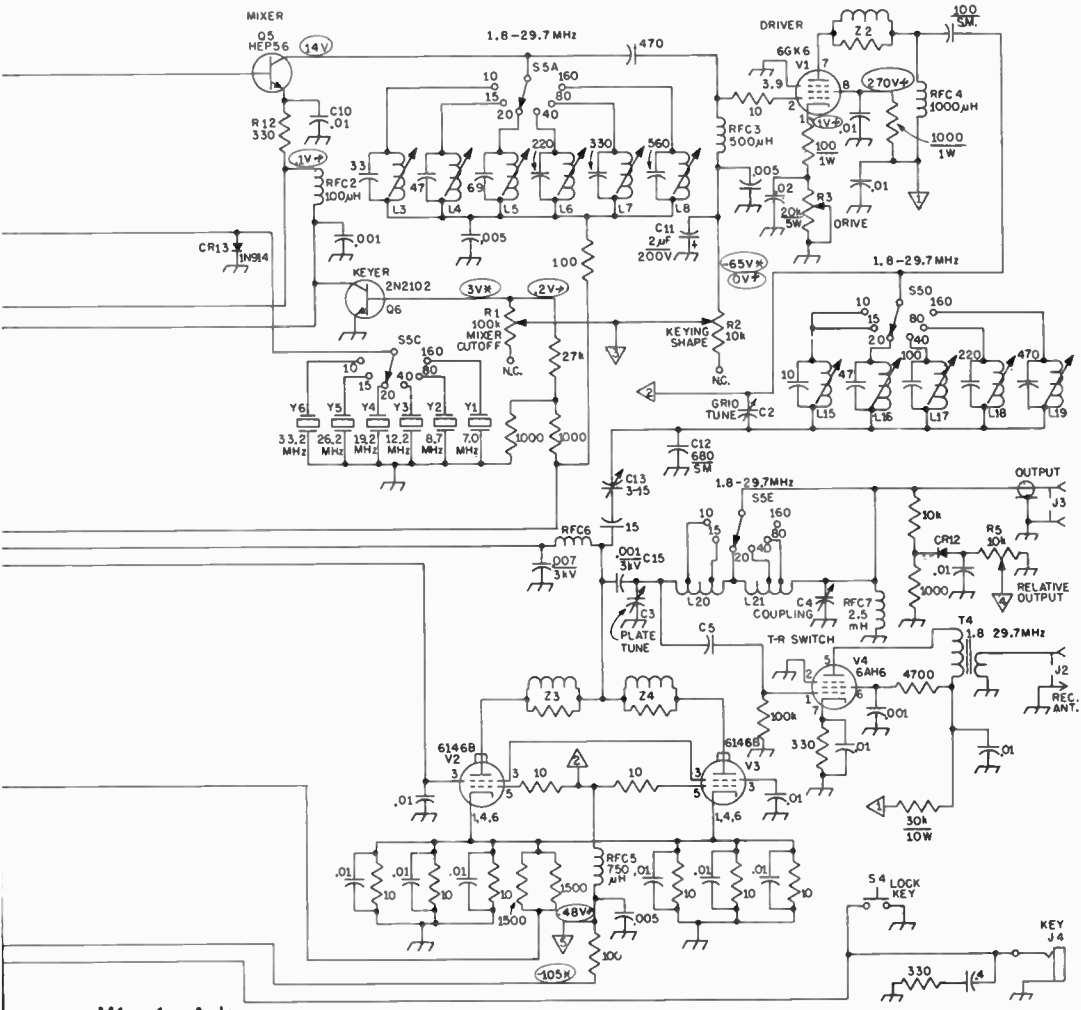

M1 — 1-mA dc.

R1 — 100,000-ohm, linear-taper, 2-watt carbon control (Allen Bradley).

R2, R4, R5, R6 — 10,000-ohm, linear-taper, 2-watt carbon control (Allen Bradley).

R3 — 20,000-ohm, linear-taper, 4-watt, wire-wound control (Mallory M20MPK).

RFC1 — Three Amidon ferrite beads threaded on a 1/2-inch length of No. 22 wire. A 15-ohm 1/2-watt resistor may serve as a substitute. (Amidon Assoc., 12033 Otsego St., N. Hollywood, CA 91607).

RFC2 — 100-µH rf choke (Millen 34300-100).

RFC3 — 500-µH rf choke (Millen J300-500).

RFC4 — 1000-µH rf choke (Millen 34300-1000).

RFC5 — 750-µH rf choke (Millen 34300-752).

RFC6 — 1-mH rf choke (E. F. Johnson 102-752).

RFC7 — 2.5-H rf choke (Millen 34300-2500).

RFC8, RFC9 — 50-µH rf choke (Millen 34300-50).

S1-S4, incl. — Spst push button (Calectro E2-144).

S5 — Ceramic rotary switch, 5 poles, 6 positions, 5 sections (Centralab PA-272 index with 5 type XD wafers).

S6 — 2-pole, 6-position, single-section rotary (Centralab PA-2003).

T1 — 117-volt primary; secondary 760 volts at 220-mA, center tapped; 5-V at 3-A; 6.3-V at 5-A (Stancor P-8170 or equiv.).

T2 — 117-volt primary; secondary 125 volts at 50 mA; 6.3-V at 2-A (Stancor PA-8421 or equiv.).

T3 — Primary: 8.2- to 8.9-µH slug-tuned inductor (J. W. Miller 46A826CPC). Secondary: 2 turns No. 22 enameled wire wound on the cold end of the primary.

T4 — 20 turns No. 24 enameled wire wound on a 1-inch long, 1/2-inch dia iron core from a slug-tuned coil form. The secondary is 3 turns No. 24 enameled wire wound over the cold end of the primary.

U1 — Transient voltage suppressor, 120-volt (General Electric 6RS20SP4B4).

Z1 — 3 turns No. 22 wire space-wound on a 100-ohm, 1-watt composition resistor.

Z2, Z3 — 5 turns No. 18 wire space-wound on a 100-ohm, 2- watt composition resistor.

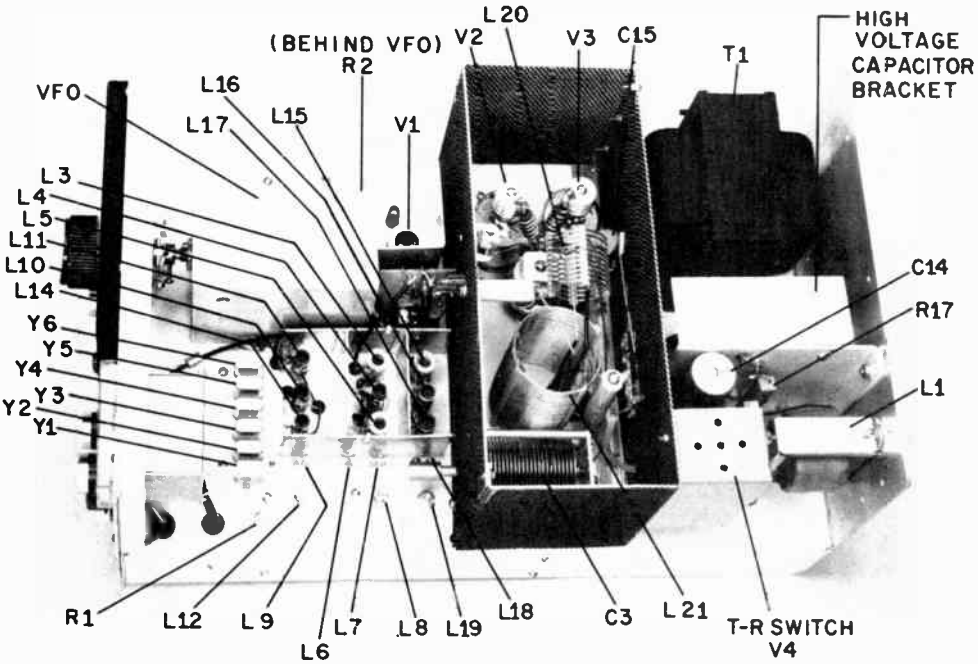

Fig. 3 — Top view of the cw transmitter.

together to form a compartment for the slug-tuned coils. The etched circuit board for the buffer, Q3, and the mixer, Q5, is mounted vertically between the slug-tuned coil compartment and the driver tube, V1. An aluminum box measuring 2 1/2 X 2 1/4 X 1 3/4 inches is used as a meter enclosure.

Most of the power-supply components are mounted on the rear quarter of the chassis. The bracket located next to the power transformer supports the three filter capacitors for the high-voltage supply. Accidental contact with the 1000-volt line is prevented by the top lip.

The T-R switch, V4, is mounted inside a Minibox attached to the rear of the amplifier shield compartment. The signal-input connection to V4 is made through the shield. Five holes in the top of the Minibox cover provide ventilation for the 6AH6.

The VFO is built on an etched circuit board and is completely enclosed in the shield cover behind the tuning dial. In order to enhance mechanical stability, the cover is made of 3/16-inch-thick aluminum. A small hole is drilled in the side of the cover to allow for adjustment of L1.

All of the wiring between stages is done with shielded cable. Additionally, all leads to the meter-switch compartment are shielded.

A capacitor constructed from a short piece of RG-59A/U is used for C5 (Fig. 2). The shield and inner conductor overlap approximately 1 inch. If a ceramic capacitor is used at this point it should have a capacitance of roughly 3 pF, and a voltage rating of 3 kV.

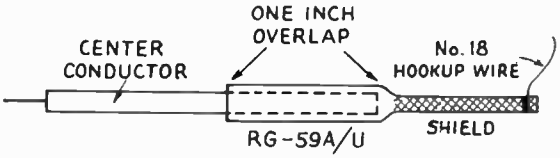

Fig. 4 — A high-voltage capacitor is constructed from a 3-inch piece of RG-59A/U. A 1-inch overlap between the braid and center conductor provides the correct amount of coupling for the T-R switch.

Adjustments

Before power is applied to the T-9er, resistance measurements should be made at several points to assure there are no wiring errors which could cause damage to the power supply.

A general-coverage receiver is used to check the operation of the heterodyne oscillator on each crystal frequency. Then, the receiver antenna is coupled to pin 2 of V1 through a 100-pF capacitor. By setting the bandswitch at 160 meters and adjusting the VFO signal to 5.2 MHz, a signal should appear at 1.8 MHz when the spotting switch is depressed. Adjust L3 for maximum S-meter reading. Tune L4 (80 meters) through L8 (10 meters) in a similar manner. All of the tubes should be removed for these tests.

The biggest pitfall in aligning the mixer is

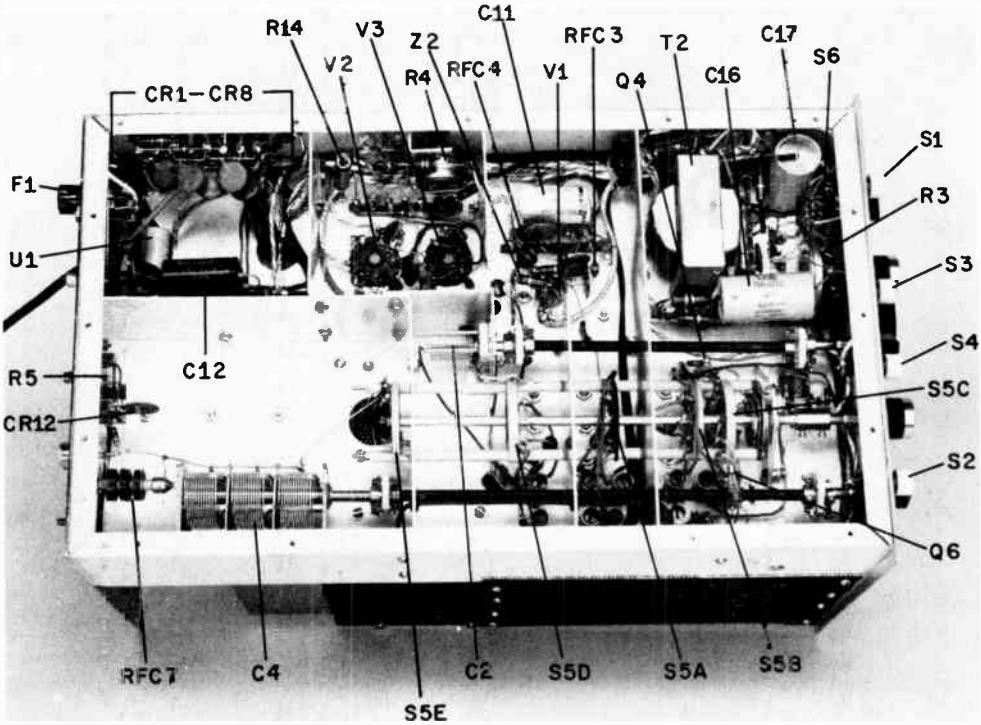

Fig. 5 – Chassis bottom view. The opening next to S5E is needed to make connections to L20 and L21.

tuning the output circuit to something other than the desired frequency. For instance, on 20 meters, the mixer can be tuned to the third harmonic of the VFO, producing output at 15.6 MHz! There are a few similar combinations which might be encountered.

After determining that the solid-state circuitry is functioning correctly on each band, the tubes are installed and the driver coils are adjusted. To set the final-amplifier bias, set the drive control at minimum (ccw), depress the key, and adjust R4 for a PA cathode current of 5 mA.

The entire alignment must be "touched up" under full-power output conditions. The heterodyne oscillator coils should be detuned to a point where the power output drops approximately 2 percent. This procedure assures proper oscillator injection at the mixer. When the rf alignment is completed, a receiver should be connected to J2. If any backwave is heard under key-up conditions, adjustment of R1 should eliminate it.

In a transmitter of this type, leads to the bandswitch lugs contribute stray inductance and capacitance. For this reason, the builder is advised to "tack" the mica capacitors across the inductors until it is determined that the various circuits will resonate at the proper frequencies. Only then should the capacitor leads be soldered permanently in place.

Performance

Power output from the T-9er is roughly 150 watts on 160 through 20 meters. On 15 meters the output drops to 125 watts, and on 10 meters it is slightly over 100 watts. The reduced output on the higher bands is caused by marginal drive to the 6GK6. It is not considered important enough to add another buffer stage with its associated bandswitch wafer coils.

The screen voltage (SV) switch is included to provide a low-power tune-up function. It is best not to operate (on the air) in the low-voltage position. If low power operation is desired, the drive can be reduced during normal screen-voltage conditions.

Every effort has been made to produce a TVI-free transmitter. The addition of a low-pass filter should make harmonic radiation almost immeasurable.

Keying Wave-Form Adjustment

A wide range of keying characteristics is available. R2 should be adjusted while observing the transmitted signal on an oscilloscope. Typical patterns are shown in the Code Transmission chapter. If an oscilloscope is not available, keying adjustment could be made on the air with the help of a local amateur. These tests should be made on a dead band, however, thus preventing needless QRM.

A SWEEP-TUBE LINEAR AMPLIFIER

Fig. 1 — Front view of the 800-watt amplifier. An LMB CO-1 cabinet, Simpson 02640 meter, and Kirsh-Kash S-649-70L knobs are used, giving a modern appearance. Coils are changed through the door in the top of the cabinet.

This simple 800-watt PEP sweep-tube amplifier is designed for use on the 160-, 80-, 40-, and 20-meter bands. It is a self-contained unit, complete with power supply and antenna relay. *Note that in some areas of the country this amplifier cannot be used at full input power on the 160-meter band.* The amplifier is designed to be a low-cost companion to any of the single- and triband hf transceivers. (A 160-meter transverter is described in Chapter 13.) Because only low-duty-cycle transmission is suitable for sweep tubes operated at high power levels, this amplifier cannot be used for a-m, fm or RTTY service.

Circuit Data

Four 6KD6 color-TV sweep tubes are used in parallel in the circuit of Fig. 2. This grounded-grid amplifier operates in the Class-AB region.

The extremely low plate-load impedance of this amplifier – approximately 500 ohms – requires that special measures be taken to match the plate circuit to the load. A tapped-coil arrangement at L1 aids in obtaining a suitable match. Individual 10-ohm resistors are used in each cathode lead to aid in balancing the tubes for equal resting plate currents. Bias is developed across Zener diode VR1.

K1 provides a "switch-through" feature which permits the antenna to be used during receive. Also, by not activating K1 the transceiver can be used (bypassing the amplifier) while the amplifier is kept ready for use. If the operator does not plan to use this amplifier with a transceiver, the relay contacts can be rewired for antenna changeover – the usual arrangement for separate transmitter and receiver setups.

Construction

The general layout can be seen in the photographs. The equipment is built in an LMB CO-1 cabinet. Any homemade or commercially built cabinet of suitable size (more than 14 X 12 X 6-inch) may be employed.

Inductors RFC1, RFC2 and RFC3 are hand-wound. RFC3, the plate rf choke, is wound for operation at low impedance over the range from 3.5 to 30 MHz. It was designed with the aid of an RX meter and "looks" like 100,000 ohms on all bands but 10 meters. On ten meters it looks like 25,000 ohms. RFC1 and RFC2 consist of 65 turns of enameled wire on lengths of 1/2-inch diameter ferrite rod. Homemade brass anchors, 1/8-inch wide, are snapped onto each end of each rod and are used as tie points for the ends of the windings. RFC1 and RFC2 are attached to chassis standoff posts by means of plastic cable clamps. L1 is mounted by means of bus-wire pigtails. RFC3 is wound on a piece of 3/4-inch diameter polystyrene rod. A steatite rod can also be used. (An H. H. Smith 2630 standoff would be suitable, and it has a threaded hole at each end for attaching terminals.)

L2 and L3 are made up as plug-in assemblies so that the amplifier can be used as a single-band unit. Band-switching arrangements would not be practical with the type of tank circuit used. A pi-network tank could be used, and switched, but because of the very low impedance of the plate circuit, the amount of capacitance required for the input and output capacitors of the pi-section tank would be impractical if a satisfactory Q were to result on 160, 80 and 40 meters. The plug-in coils are mounted on James Millen 41305 jack-bar plugs.

C1 is a 160-pF transmitting-type variable taken from a surplus TU tuning unit. Any variable capacitor with similar capacitance and plate spacing (approximately 1/8 inch) can be substituted.

A high-speed cooling fan is used to keep the tube envelopes at a safe temperature. The forced-air cooling also helps to prevent damage to the plates of the tubes from excessive heating. The fan blades should be mounted close to the tubes and should be capable of providing 100 ft^3/m or better.

Power Supply

The primary side of T1 has a neon indicator across the line, DS2, to serve as an on-off panel indicator. K2 and the 25-ohm resistor are used when the supply is first turned on (S2 open) to provide protection to CR1 through CR8, inclusive, while the filter capacitor bank charges. The relay will remain open for a few seconds, gradually closing and shorting as the capacitors become charged. U1, a G.E. Thyrector assembly, is bridged across the primary of T1 to knock down any transients above the normal primary level, thus offering protection to the diode string in the secondary circuit.

Eight diodes are used in a full-wave rectifier circuit at the secondary of T1. Each diode has a

The SS-2000 Amplifier

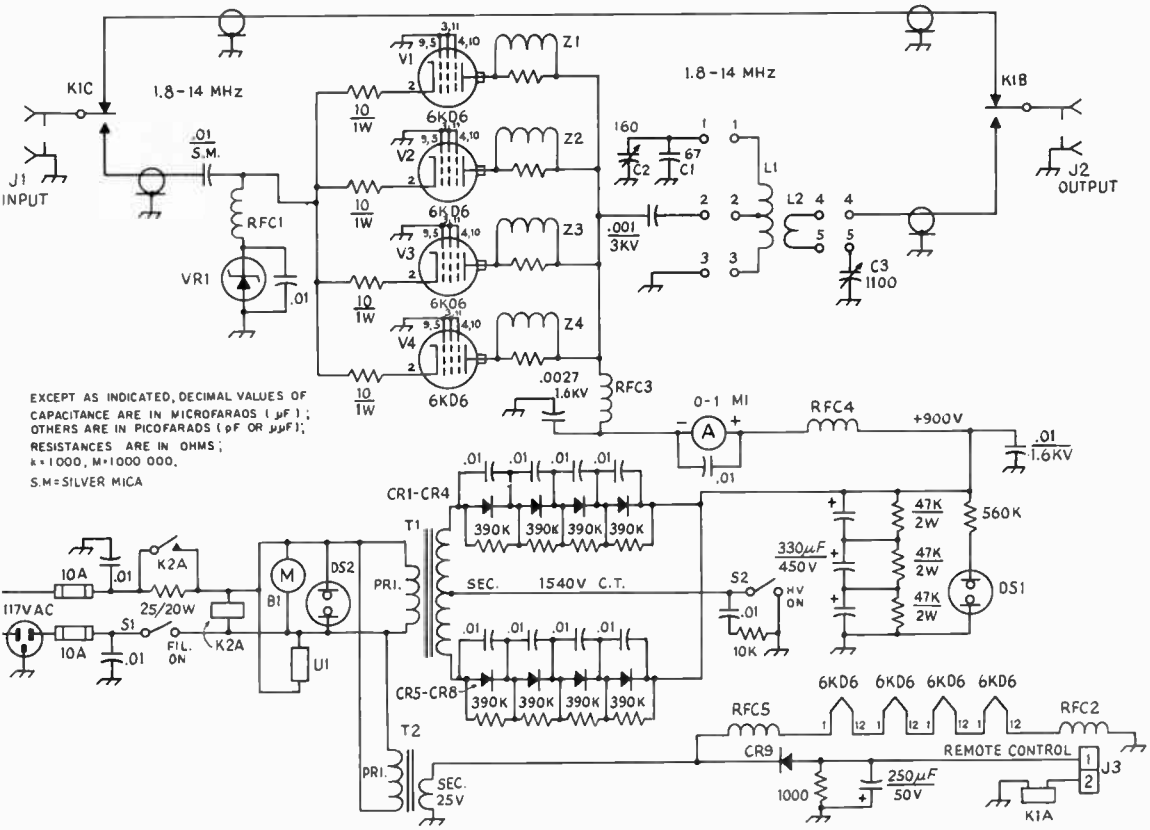

Fig. 2 — Schematic diagram of the linear amplifier. Fixed-value capacitors are disk ceramic unless otherwise indicated. Resistors are 1/2-watt composition uless otherwise marked.

B1 — High-speed fan (Barber-Coleman DYAF 761-110 with AYFA-403 blades suitable).
C1 — 67-pF, 2000-V mica or ceramic transmitting type.
C2 — Transmitting variable, 1/8-inch plate spacing (see text).
C3 — 3-section broadcast variable, 365-pF per section; all sections connected in parallel (J. W. Miller 2113 or equiv.).
CR1-CR9, incl. — Silicon diode, 1000 PRV, 1 A.
DS1, DS2 — Part of S1 and S2, respectively.
J1, J2 — SO-239-type chassis connector.
J3 — 2-circuit terminal strip.
K1 — 24-volt dc relay with 10-A contacts.
K2 — 117-volt ac relay with 20-A contacts (double-pole unit with parallel-connected contacts suitable).
L1 — 160 meters — 40 turns, No. 14, 2 1/2-inch dia, tap at 12 turns (B&W 3029). 80 meters — 18 turns No. 12 wire, 2 1/2-inch dia, 3 inches long, made from Polycoils 1774 stock. Tap 6 turns down from C1 end. 40 meters — 12 turns No. 12 wire, 2 1/2 inch dia, 3 inches long, made from Polycoil stock. Tap 3 down from C1 end. 20 meters — 8 turns No. 10 wire, 1 1/4-inch ID, 3 inches long. Tap 3 turns from C1 end.
L2 — 160 meters — 11 turns No. 12, 3-inch dia, over the ground end of L1 (Polycoil 1779). 80 meters — 5 turns No. 14 wire, 3-inch dia, approx. 3/4 inch long. Mount over outside of L2 at ground end. 40 meters — 3 turns No. 14 wire, 3-inch dia. Mount over ground end of L2. 20 meters — 2 turns No. 12 wire, 2 inches dia. Mount over ground end of L2.
M1 — 0 to 1-ampere dc meter (Simpson 1227 used).
RFC1 — 65 turns No. 20 enam. wire, close-wound on a 4-inch length of 1/2-inch dia ferrite rod, approx. 200 μH.
RFC2, RFC5 — 55 turns on Amidon T-130-2 toroid core. Core wrapped with 3M No. 27 glass tape. Both windings on one core, using No. 16 enam. wire.
RFC3 — See text and Fig. 4.
RFC4 — 2.5 mH rf choke.
S1, S2 — Rocker switch with built-in neon indicator.
T1 — 1540 V ct at 375 mA (Stancor P-8042 suitable. Available from Arrow Electronics, Inc., 900 Route 110, Farmingdale, NY, 11735).
T2 — 25.2-V filament transformer (Stancor P-8388).
U1 — Thyrector transient suppressor (G.E. 20SP4B4).
VR1 — 6.9-V, 50 watt Zener diode.
Z1-Z4, incl. — Parasitic choke. 8 turns No. 24 enam. wound on body of 56-ohm 1-watt carbon resistor. Use resistor pigtails as solder terminals for ends of windings. Mount near plate caps.

[1] The pilot lamps and the three rocket switches used here are available from Carling Electric, Inc., 505 New Park Avenue, West Hartford, CT 06110. Order direct if not locally available. Catalog available if requested.

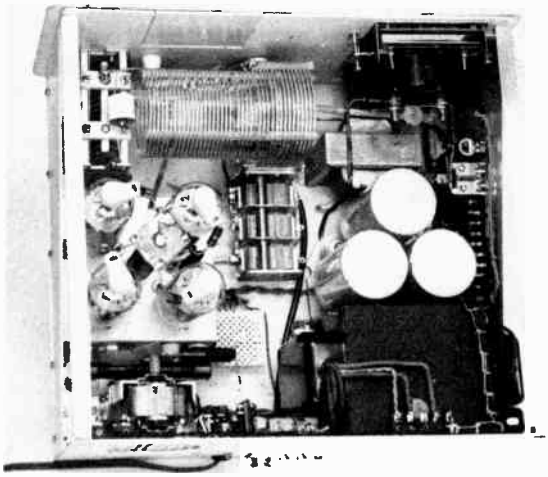

Fig. 3 — The power supply is constructed along the left-hand side. A flat sheet of aluminum is used as a base. The four sweep tubes are mounted on a small 4 X 4 X 1 1/4-inch U-shaped bracket at the upper right. The meter is mounted behind the panel using a Simpson 01253 bezel mounting kit.

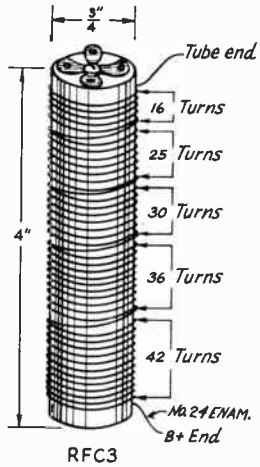

Fig. 4 — Details for winding the plate choke, RFC3.

resistor and a capacitor across it to offer protection in the event the voltage division across the diodes is unequal. S2 is the HV ON switch and has a transient suppressor across it to prevent damage to the switch when it is cycled.

Three computer-grade capacitors are series-connected at the output of the rectifier to provide 110-μF at 1350 volts. Each capacitor has a 47,000-ohm resistor across it to assure equal voltage drop. DS2 is the high-voltage ON indicator. Output from T2 is for the filament supply.

Operation

Approximately 50 watts of peak driving power are required to operate this amplifier at its rated 800 watts (PEP) input. If the transceiver being used as a driver has more power output than 50 watts, merely turn the transceiver's audio-gain control down until the power output is correct.

With a 50-ohm dummy load attached to J2, and with operating voltages applied, apply a small amount of drive until an increase in plate current is evident (approximately 100 mA). Adjust C2 until a dip in plate current occurs. Increase drive until 300 mA of plate current is indicated on M1. Quickly dip the plate current and remove drive. Warning: *Do not allow continuous plate current in excess of 100 mA to flow for more than 30 seconds at one time.* Allow 30 seconds for cooling between tests. Next, apply drive until approximately 800 mA of plate current is obtained at dip. C3 should be adjusted for proper loading, making the dip in plate current somewhat broad and shallow. The amplifier is now ready for use and will have a dc input of 800 watts at this setting. Tests made with a spectrum analyzer showed that the IMD (intermodulation distortion) was very good at this power level. The third-order products were down some 27 decibels, and the fifth-order products were down in excess of 50 dB. The second harmonic product was measured at 35 dB down. If the operator does not mind the risk of shortened tube life, the power level can be 1000 watts PEP input. The efficiency of the amplifier is approximately 65 percent.

Other types of tubes can be substituted in this circuit, but few will permit the power level discussed in this amplifier. A good substitute might be the 6LQ6.

THE SS-2000 AMPLIFIER

The SS-2000 linear amplifier is designed to handle the legal maximum power input on cw and ssb. Because of the high plate-dissipation rating of the tube there is plenty of safety margin to prevent tube damage in the event of accidental mistuning. This amplifier is carefully shielded and filtered for the reduction of TVI. Though a 3-1000Z tube is used, the popular 4-1000A can be substituted as mentioned later. Both tubes have a maximum plate dissipation of 1000 watts. A suitable power supply for this amplifier (3000 volts) is described in the chapter on power supplies.

Circuit Description

Referring to Fig. 2, the amplifier is connected for grounded-grid operation. Excitation is applied through a switchable pi-section input tuned circuit. This network serves a twofold purpose: It reduces the amount of drive needed, by virtue of proper impedance matching between the exciter and the amplifier. It improves the IMD of the amplifier by providing the exciter with a better load than might otherwise exist. Approximately 50 watts of drive will be ample for the 3-1000Z. Roughly 125 watts

of excitation will be needed if a 4-1000A is used in this circuit.

A pi-network plate tank is used in the output side of the amplifier. It uses homemade coils wound with 1/4-inch diameter copper tubing. The L-C ratio was chosen for operation at 3000 volts. Lower plate voltages will permit power in excess of 1 kW, but a different set of coil taps will be required if a suitable Q is to be maintained. The lower plate voltages will necessitate the use of more C and less L in the tank.

A tuning/loading-indicating circuit is connected between the grid and plate terminals of the tube. It samples the input and output waveforms, rectifies them, and compares their different voltage by means of a zero-center microampere meter, M2. If the amplifier is mistuned, or is looking into an improper load, the meter will deflect off zero and indicate a nonlinear condition. Those not wishing to use the linearity detector may omit it from the circuit. Additional metering is provided for by M2 – plate voltage, grid current, and forward and reflected power. The SWR metering is made possible by the bridge shown at the upper right of Fig. 2. It is patterned after a design in the Measurements chapter, and can be made to serve as a zero to 2000-wattmeter by selecting the proper-value resistors at R3 and R4. By substituting 25,000-ohm potentiometers for the fixed-value calibrating resistors, the job should be a bit less tedious. A power calibration scale can be plotted for M2 by checking power output with an rf ammeter, or by comparing meter readings with a commercial wattmeter. T2 is a toroidal transformer consisting of 60 turns of No. 30 enameled wire, close-wound on an Amidon T-68-2 form. The bridge is built in a Minibox and is mounted on the rear-outer wall of the amplifier case. A zero to 1-ampere panel meter, M1, monitors the plate current of the 3-1000Z.

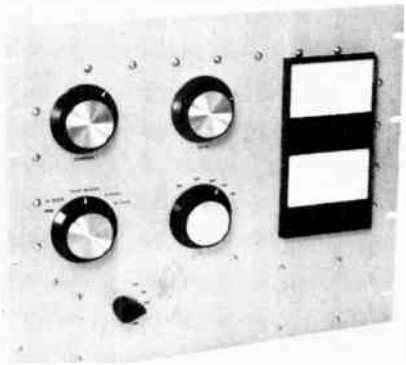

Fig. 1 – The front panel of the 2-kW PEP amplifier has the controls grouped at the left. The panel has been sprayed with gray enamel, and black decals identify the controls. The hardware visible in this photograph secures the TVI shielding.

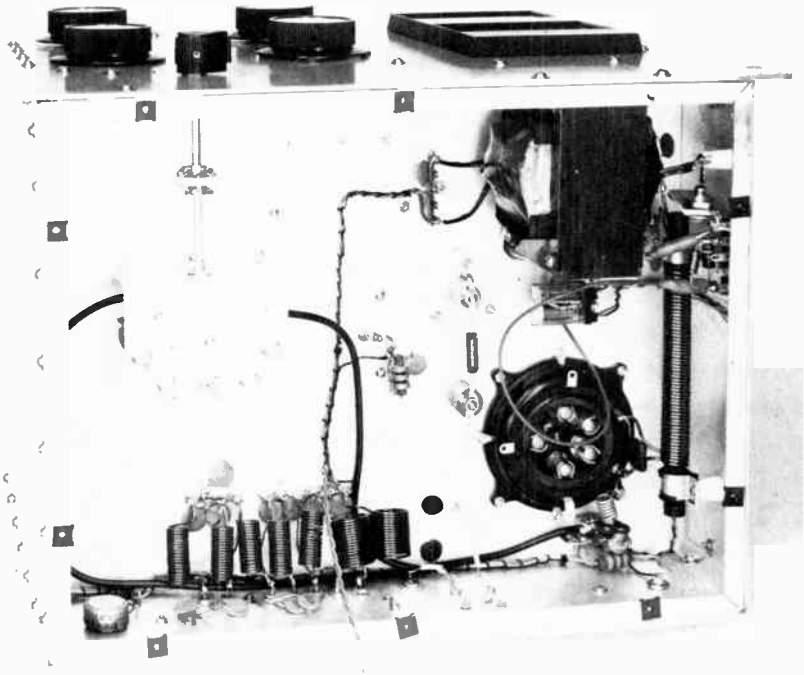

Fig. 2 – In this bottom view of the amplifier, the filament transformer is visible at the upper right, just above the filament choke which runs along the right wall of the chassis. Relay K1 is located between the transformer and the tube socket. The slug-tuned coils of the cathode network are at the left, with the pi-section filters for the power leads just below. A ceramic feedthrough bushing is used to carry the 3000-volt lead up through the chassis.

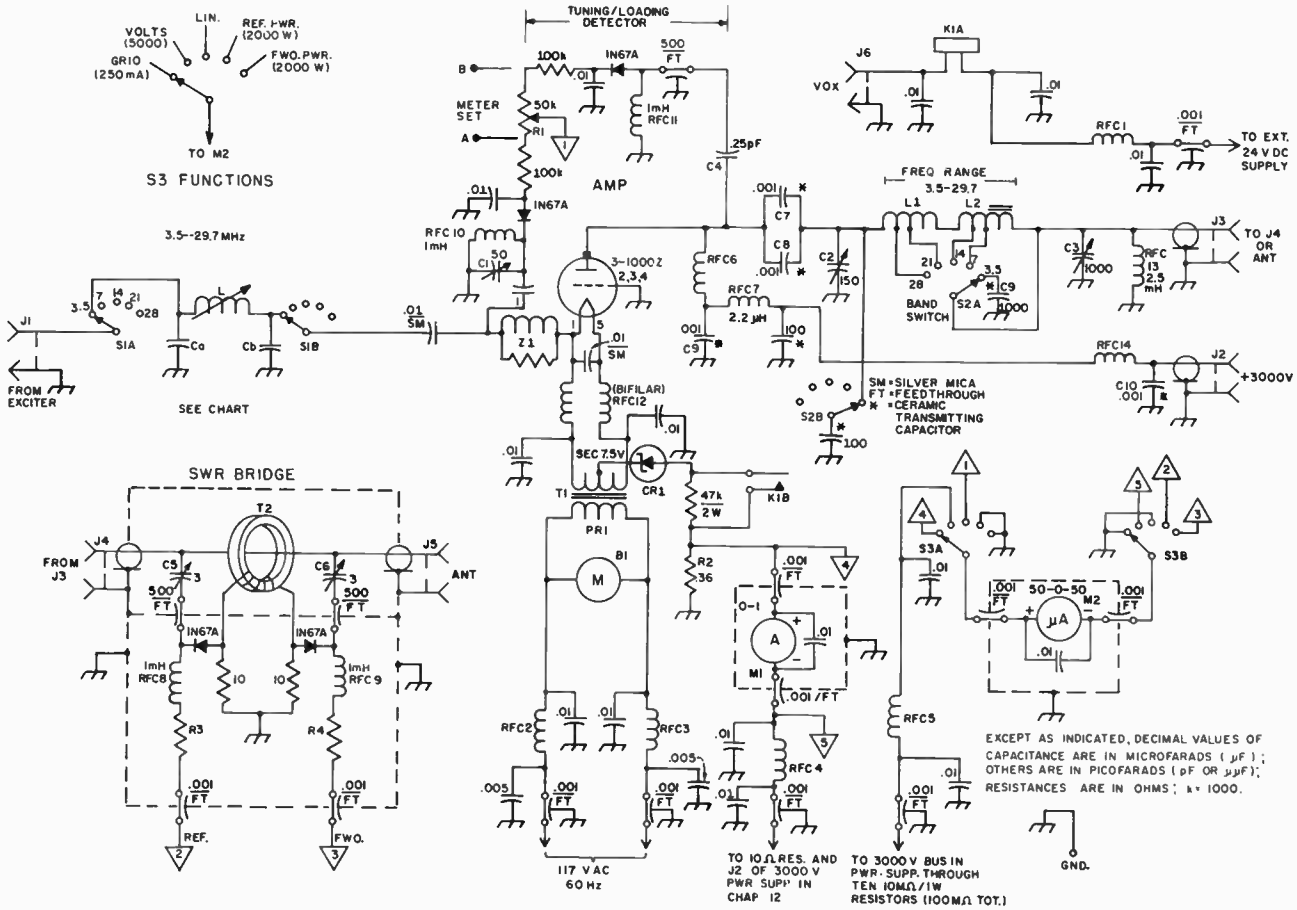

Fig. 3 — Schematic diagram of the 3-1000Z amplifier. Fixed-value capacitors are disk ceramic unless noted differently, and fixed-value resistors are 1/2-watt carbon, except where noted otherwise.

B1 — 117-V ac, 100-ft^3/m blower (Burstein-Applebee 41A4003).
Ca, Cb — See table.
C1 — Trimmer, 50 pF (Centralab 822AN).
C2 — Transmitting air variable, 150 pF (Johnson 154-15).
C3 — Transmitting air variable, 1000 pF (Johnson 154-30).
C4 — See text.
C5, C6 — Piston trimmer, 0.5 to 3 pF (JFD 25G).
C7-C10, incl. — Transmitting type (Centralab 858S-1000).
CR1 — Zener, 6.8V, 50 W (International Rectifier 23305-C).
J1, J6 — Phono jack, panel mount.
J2 — HV coaxial connector, chassis mount, type HN.
J3, J4, J5 — SO-239-style chassis-mount connector.
K1 — Spst 24-volt dc relay.
L — See table.
L1 — 11 turns, 1/4-inch dia copper tubing, 1 1/2-inches ID, space turns so that the entire coil is 3 1/4 inches long. Tap at 5 turns for 28 MHz and 9 turns for 21 MHz.
L2 — 10 turns, 1/4-inch dia copper tubing, 3 1/2 inches ID, space turns so that the entire coil is 4 inches long. Tap at 2 turns for 14 MHz, 7 turns for 7 MHz, and use the entire coil for 3.5 MHz. Inside the 3.5-MHz end of the coil is a package of eight 2-inch long, 1/2-inch dia ferrite rods (cut from the stock specified for RFC12).
M1 — 0 to 1-A meter (Simpson 17565).
M2 — 50-0-50-µA meter (Simpson 17597).
R1 — 50,000-ohm linear-taper composition control.
R2 — 0.36 ohms, 25 turns of No. 30 enam. wire on the body of a 1/2-watt composition resistor.
R3, R4 — Selected to give full-scale deflection (forward power) on M2 at 2000 watts. (See text for details.)
RFC1, RFC4, RFC5 — Rf choke, 18 turns No. 14 enam. wire, close-wound, 1/2-inch dia.
RFC2, RFC3, RFC14 — Rf choke, 24 turns No. 14 enam. wire, close-wound, 1/2-inch dia.
RFC6 — Rf choke (National Radio R-175A or B&W 800).
RFC7 — 2.2-µH rf choke (Miller 74F226AP or equiv.).
RFC8, RFC9 — 1-mH rf choke (Millen J300-1000).
RFC10, RFC11 — 1-mH rf choke (Miller 4652).
RFC12 — Bifilar filament choke, 28 turns of No. 10 enam. wire, close-wound on 1/2 X 7 1/2-inch ferrite rod (Newark Electronics 59F1521 ferrite rod suitable).
RFC13 — 2.5-mH rf choke (National R-100 or equiv.).
S1 — Ceramic rotary switch, 2-section, 6 position (5 used), 2 pole, non-shorting contacts (Centralab 2511).
S2 — Ceramic rotary power switch, 2 pole, 1 section, 8 position (5 used), non-shorting contacts (Centralab JV-9033).
T1 — Filament transformer, 7.5 volts, 21 A (Triad F28U).
T2 — Toroidal transformer (see text).
Z1 — Rf choke, 6 turns No. 16 on the body of a 100-ohm, 1-watt composition resistor.

Construction Notes

The SS-2000 is built on a 13 X 17 X 4-inch chassis (Bud AC-428), and uses surface-shield panels for the front and rear walls of the enclosure. The front panel is 15 3/4 inches high, and 19 inches wide (Bud SFA-1839). The rear panel measures 14 X 19 inches (Bud SFA-1838). If a 4-1000A tube is to be used it is recommended that the next size larger panels be used to allow clearance inside the cabinet for the tube. (The 4-1000A is somewhat taller than the 3-1000Z.)

The input tuned circuit is housed on a bracket near the center of the chassis bottom. Between this cathode network and the tube itself, a parasitic suppressor, Z1, is included to kill any tendency toward vhf oscillation. Locating this choke in the cathode lead eliminates the losses common in 21- and 28-MHz operation when parasitic suppressor is placed in the plate lead.

An Eimac SK-510 tube socket, and an Eimac SK-506 chimney are used in this amplifier. Grid grounding is effectively done by passing the leads through the slots in the side of the tube socket which were provided for this purpose. Grid-pin connections are made to long solder lugs which are bolted to the chassis at the tube socket. Short leads of heavy-guage wire or copper strips are vital to good amplifier stability.

Layout of the major components can be seen in the photos. It is important that a good ground connection be made between C2, C3, and the panel. Similarly, the panels should be securely grounded to the chassis. A heat-dissipating anode connector is used as an aid to tube cooling.

A 100-ft^3/m blower is mounted on the bottom cover of the amplifier, slightly off center from the tube base. Its final positioning should be set for best air flow through the tube socket.

The terminal connections provided on T1 are much too bulky to be easily handled. They were replaced by smaller lugs that will accept No. 10 screws which thread into the ceramic pillars that are used as standoff insulators for the filament tie points.

The SWR bridge is housed in a 4 X 2 1/4 X 2 1/4-inch Minibox. Lead lengths should be kept short and as symmetrical as possible to assure proper operation. Good electrical balance is essential if the unit is to be balanced properly, thus assuring that it is truly bilateral. The dashed lines indicate shield compartments, Fig. 2.

Capacitor C4 in the linearity-detector circuit must be able to withstand high voltage and must be very low in capacitance value – on the order of 0.25 pF. In this model a glass piston trimmer is used for C4. The piston is removed and discarded. Connections for C4 are made by soldering to the foil wrap, top and bottom, with a low-heat soldering iron. An air-dielectric homemade capacitor could be fashioned from two copper tabs spaced 1/2 inch or more apart, firmly mounted on ceramic pillars.

Amplifier Adjustment

Initial testing should be carried out with a 50-ohm dummy load connected to the output of

the amplifier. If a Variac is available, gradually increase the high voltage to make certain that no short circuits or wiring errors are present, then increase the B plus to 3000 volts. At this point there should be no grid-current reading, but the resting plate current should be roughly 110 mA. Next, apply a small amount of driving power and observe the SWR meter. Tune the plate tank for maximum forward power, thus indicating resonance. Now, increase single-tone or cw drive until the resonant plate current is 330 mA. The grid current will now be approximately 75 mA. Operating in this manner the amplifier is adjusted for 1-kW dc input. Peak plate current for 2-kW ssb conditions will be 667 mA, and the grid current will be approximately 220 mA. All amplifier adjustments for arriving at the 2-kW PEP dc-input level must be made while using a dummy load if pulsed-tone or steady-carrier drive is applied to the amplifier. *Stay legal by not exceeding the legal 1 kW maximum dc input level when the antenna is connected.*

When adjusting the linearity detector the bottom cover of the amplifier is removed (*beware of high voltage*) and the amplifier is operated at an intermediate power level. With a voltmeter, check between point B and ground. The voltage, typically, will be between 0.5 and 1.5 volts. The voltage is then checked at point A, and C1 is adjusted to give the same voltage as is present at B. R1 is then set (amplifier operating at 2-kW into a dummy load) to give a reading of zero on M2. The meter reading is maintained at zero, thereafter, when the amplifier is properly adjusted and operating into a 50-ohm antenna.

In adjusting the SWR bridge, connect a dummy load to J5 and apply drive from the exciter to J4. Set M2 to read reflected power and place a shorting wire across R3. Adjust C6 for minimum meter deflection. Now, reverse the connections to J4 and J5, remove the short from R3 and place it across R4. Adjust C5 for minimum meter reading. Check for minimum reflected power at 28 and 3.5 MHz. It should be the same if the bridge is properly nulled. The values of R3 and R4 will have to be selected to give best accuracy at the 2000-watt input level. If an accurate wattmeter is available it can be used for calibrating the bridge. Small "trim pots" could be substituted for the fixed-value resistors to make adjustment easier. Their maximum resistance should be 50,000 ohms.

A ONE-KILOWATT AMPLIFIER USING A 3-500Z

Circuit design for high-power linear amplifiers hasn't changed much in recent years. The differences between various types of grounded-grid units are usually more mechanical than electrical. The degree of circuit complexity is determined primarily by the number of features desired and if the power supply and control circuits are included on the same chassis as the amplifier. Described below is a power amplifier designed to operate break-in cw as the primary mode. A suitable exciter is described earlier in the chapter. Other equipment combinations were shown in *QST* for December 1971.

The Power Supply

A voltage-doubler circuit connected to the secondary of T1 provides approximately 2600 volts dc. See Fig. 1. The primary of T1 can be operated from either a 117-volt line or a 220-volt source; the latter voltage is preferred. U1 and U2 are suppressors included to prevent transients from damaging the high-voltage capacitor bank or the rectifier diodes. Since T1 has two 117-volt primary windings, a suppressor is connected across each. The windings and suppressors are connected in parallel for 117-volt operation, and they are series connected for a 220-volt line.

A relay (K1) is necessary to switch the high-current inrush when the supply is activated. Ordinary toggle switches cannot be used to activate the power supply directly. Surge protection is accomplished by placing R1 in series with one lead of the ac line. K3B shorts out this resistor a few seconds after the main power switch (S1) is actuated. A separate line cord for the power supply allows this section to be operated on 220 volts while permitting other circuits in the amplifier to operate on 117 volts.

The Amplifier Circuit

A single 3-500Z triode tube develops 1-kW input on cw and 1-kW PEP on ssb. The output circuit is a conventional pi network which tunes the hf amateur bands from 3.5 to 30 MHz. The T-R switch, similar to the one used in the T-9er, is coupled to the tank circuit via C1. This capacitor is constructed of RG-8A/U and is 3 inches long.

Filament voltage is applied to the 3-500Z through a bifilar-wound rf choke. Drive power is coupled to the filament circuit via C2, a disk-ceramic capacitor.

Two Zener diodes are used to develop grid bias. S3C selects either CR18 for 27 volts (cw) or CR19 for a 7.5-volt bias (ssb). Since the lower bias voltage increases the standing plate current to approximately 80 mA, R7 is placed in series with the cathode-return lead to cut off the tube during standby periods. Protection for the power supply is assured by placing a 1-ampere fuse in series with the Zener diodes. This procedure could save a tube or a meter (not to mention power supply components!) in the event a high current surge or arc occurs in the output circuit.

The Multimeter

A 1-mA meter is used to measure grid current, plate voltage, and power output. R4, mounted on the rear chassis apron, allows adjustment of the

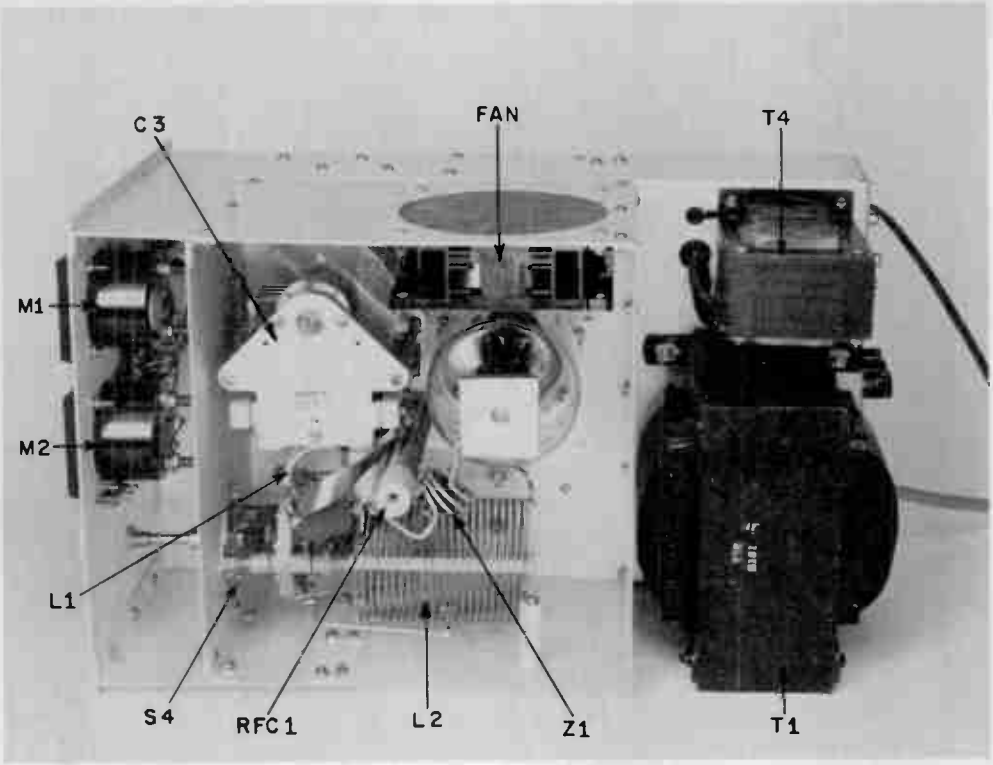

Top view.

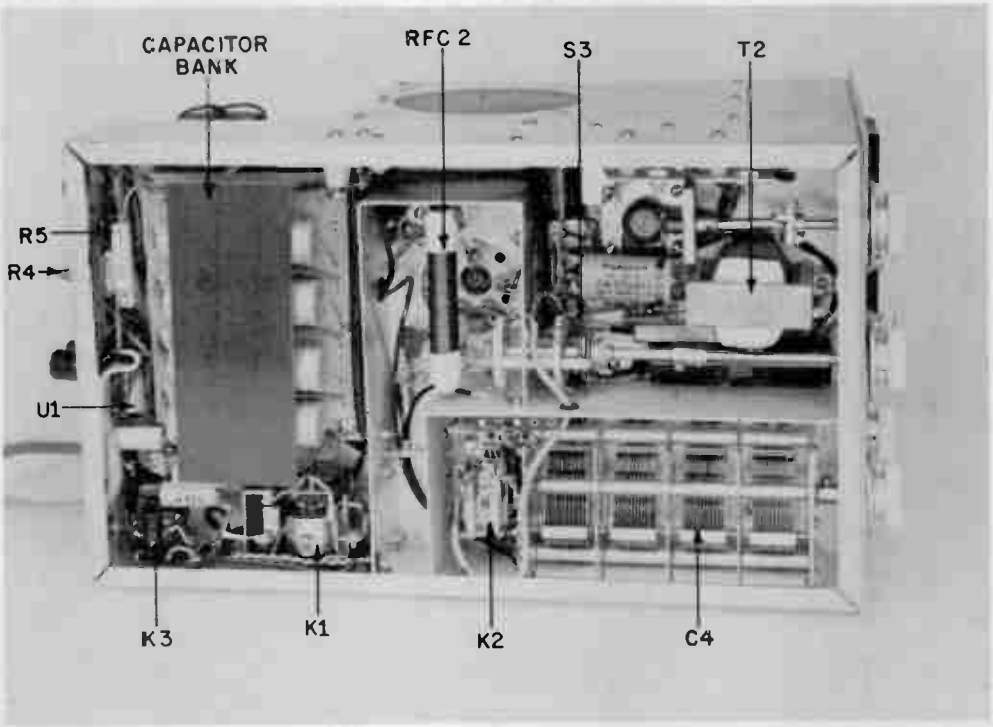

Bottom view.

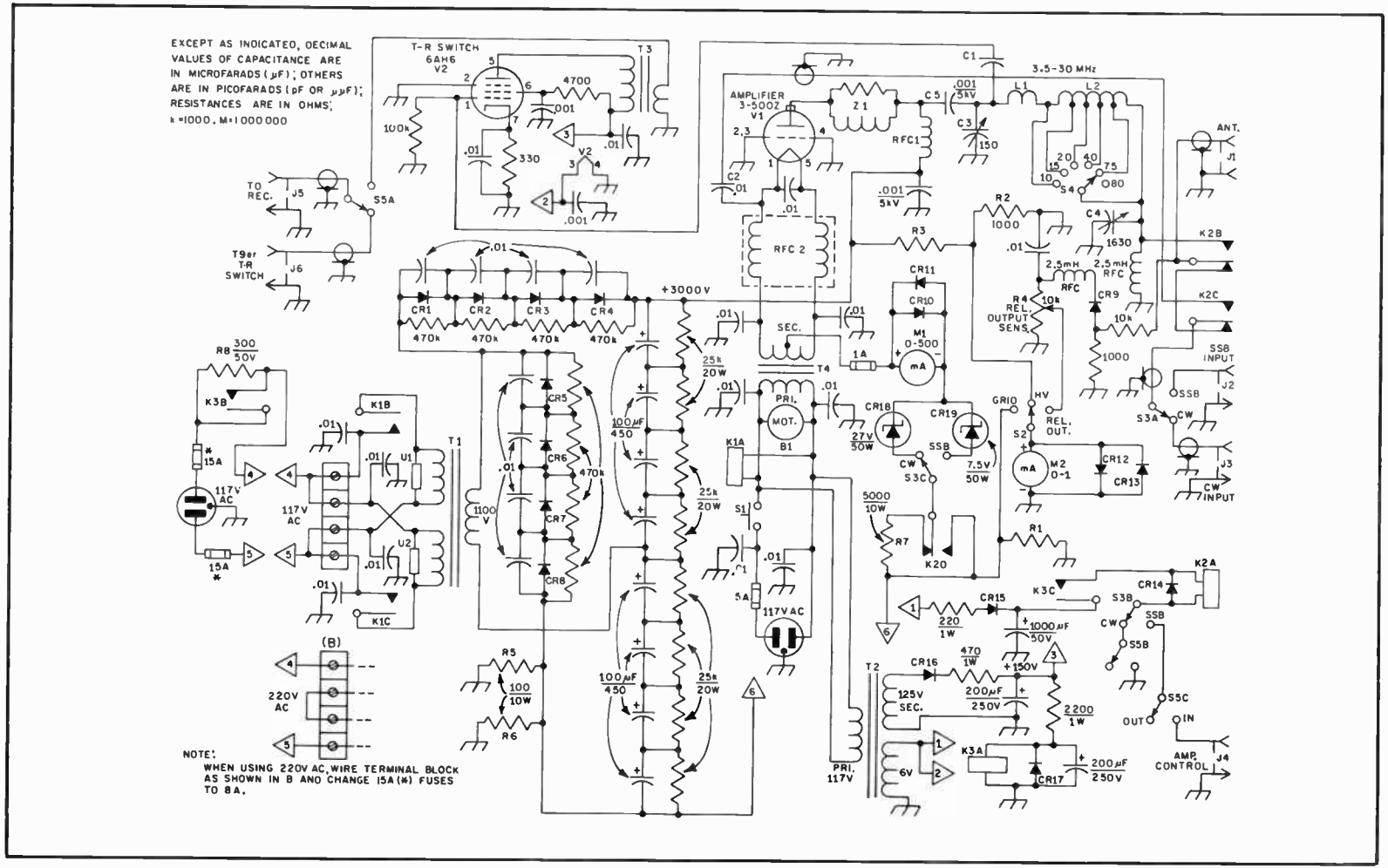
EXCEPT AS INDICATED, DECIMAL VALUES OF CAPACITANCE ARE IN MICROFARADS (μF); OTHERS ARE IN PICOFARADS (pF OR μμF); RESISTANCES ARE IN OHMS; k=1000, M=1000000
T-R SWITCH 6AH6 V2
AMPLIFIER 3-500Z V1
3.5-30 MHz
ANT.
TO REC.
T9 or T-R SWITCH
+3000V
SEC.
PRI. MOT.
B1
117V AC
220V AC
(B)
NOTE: WHEN USING 220V AC, WIRE TERMINAL BLOCK AS SHOWN IN B AND CHANGE 15A (*) FUSES TO 8A.
SSB INPUT
CW INPUT
REL. OUT.
AMP. CONTROL
OUT
IN
PRI. 117V
125V SEC.
6V

Fig. 1 — Circuit diagram for the S-9er. Component designations not listed are for text reference only. Polarized capacitors are electrolytic.
B1 — 117-volt ac fan (Rotron Whisper).
C3 — 180-pF air variable, .077-inch air gap (Millen 16250 with 4 stator plates removed).
C4 — 1680-pF air variable, receiving type (R. W. Electronics, 4005 W. Belmont Ave., Chicago, IL 60641).
C5 — Transmitting capacitor, 1000-pF ceramic (Centralab 858S-1000).
CR1-CR17, incl. — 1000-PRV, 2.5-A (Mallory M2.5A or equiv.).
CR18 — Zener, 7.5-V, 50-watt.
CR19 — Zener, 27-V, 50-watt.
J1 — Coax chassic connector, type SO-239.
J2-J6, incl. — Phono jack, single-hole mount.
K1 — Power relay, dpdt, 117-volt coil (Potter and Brumfield PR-11AY or equiv.).
K2 — 4pdt, 5-A, 6-V dc coil (Potter and Brumfield GPD coil and GO-17 contact arrangement).
K3 — Dpdt, 10-A, 120-V dc coil (Potter and Brumfield KA11DG or equiv.).
L1 — 7 turns, 1/8-inch copper tubing, 1 1/4-inch dia, tapped at 3 turns from tube end.
L2 — 23 turns, No. 14, 2 1/2-inch dia, tapped at 10 3/4 turns for 40 meters, 17 1/2 turns for 20 meters, as measured from the C4 end. (Coil stock: Barker and Williamson 3029.)
M1 — 1-A dc (Simpson Model 2122-17400).
M2 — 1-mA dc (Simpson Model 2122-17430).
RFC1 — Transmitting rf choke (Barker and Williamson Model 800).
RFC2 — Bifilar-wound filament choke (Amidon 10-A choke kit or equiv.).
S1 — Spst push button (Calectro E2-144).
S2 — Single-pole, 3-position rotary (Calectro E2-161).
S3 — 3-pole, 2-position, 2-section, rotary (Centralab 2515).
S4 — Rf switch, single-pole, 6-position (Millen 51001).
S5 — 3-pole, 2-position, rotary (Calectro E2-165).
T1 — Dual 117-volt primary, 1100-V secondary, 600 VA (Berkshire BTC 6181).
T2 — 117-volt primary; secondary 125 volts at 50-mA; 6.3-V at 2-A (Stancor PA-8421 or equiv.).
T3 — 20 turns, No. 24 enameled wire wound on a 1-inch long, 1/2 inch dia iron core from a slug-tuned coil form. The secondary is 3 turns No. 24 enameled wire wound over the cold end of the primary.
U1, U2 — Transient voltage suppressor, 120-volt (General Electric 6RS20SP4B4).
Z1 — Parasitic suppressor, 3 turns No. 12 copper wire, 1 1/4-inch dia wound over three 150-ohm, 2-watt composition resistors.

relative-output circuit sensitivity. A voltage-dropping resistor network, R3, provides a full-scale reading of 5 kV. R2 maintains a load at the meter end of R3 preventing full B+ from appearing across S2 when it is in one of the two other positions. R3 consists of five 1-megohm, 1-watt composition resistors connected in series thereby reducing the voltage across any one resistor to less than 600.

Grid current is measured by placing the meter in series with the grid (ground) and the cathode. The meter shunt, R1, provides a full-scale reading of 500 mA. R1 is equal to the internal resistance of the meter divided by 500. The resistance of M1 is 43 ohms; therefore R1 is 0.21 ohm. It is made by winding 24 1/4 inches of No. 30 wire on a 1-megohm, 2-watt composition resistor. The resistance of various wire sizes can be found in the construction practices chapter. R1 is in the primary path for the high-voltage negative lead to chassis ground. R5 and R6 provide protection in the event this meter shunt opens.

Construction

The amplifier, including the power supply, is built on a 10 X 17 X 3-inch aluminum chassis. All of the high-voltage power supply components are mounted at the rear of the chassis. Location of the various parts is shown in the photographs. All of the circuits carrying rf are completely shielded to reduce any instability or TVI generation. The input-circuit shield is mounted between S3 wafers to keep the rf wiring inside the compartment.

Extreme care must be taken in the power supply section to keep the high-voltage components from coming in contact with the primary wiring. This section of the amplifier is very crowded. A sheet of 1/16-inch thick phenolic insulating material is placed between the capacitor bank and the chassis. The electrolytic capacitors, along with the equalizing resistors, are mounted on a piece of etched circuit board. This board is "suspended" between several solder lugs attached to ceramic standoff insulators. Rubber cement is used to hold a 1/2-inch thick piece of phenolic board to the capacitors to prevent them from contacting the bottom plate when it is installed.

The rf-output circuit is completely shielded in a compartment constructed of cane metal and sheet aluminum. Perforated material is needed to allow adequate air flow past the tube. The socket is mounted 1/2 inch above the chassis, allowing air to circulate around the base connections and seal. The grid pins of the socket are soldered to lugs mounted on the chassis.

When a standard Eimac plate cap is used with the 3-500Z, the cap extends above the edge of the cabinet. Therefore, a 1/4-inch thick aluminum plate, 1 3/4-inches square, is used in place of the Eimac unit.

The plate-tuning capacitor, C3, is vertically mounted and is adjusted from the front panel using a surplus right-angle drive. A Millen drive works equally well. C4 has a shaft diameter of 3/8 inch, requiring special attention. A standard 1/4-inch coupling with one end drilled out to slightly over 3/8 inch is used as an adapter. Fine-mesh screen is placed between the cabinet wall and the fan to maintain an rf-tight enclosure. The screen does not appear to reduce the air flow appreciably.

Operation

After the position of each tank-coil tap has been determined, the relative-output sensitivity control, R4, can be adjusted for 3/4 scale meter reading at full power input.

In order to determine the plate current, the grid

current must be subtracted from the cathode current. When the amplifier is driven to a grid current of 120 mA and the tuning controls are adjusted for maximum power output, the cathode current will be about 500 mA and the plate voltage will be slightly over 2500. This represents an input power of approximately 950 watts. After extended periods of operating or tuning, the fan should be left on for a few minutes to allow the tube to cool.

Fig. 1 shows several methods for interconnecting the station equipment. The exciter IN/OUT function is performed by S5B which deenergizes K2 to allow the exciter to feed through to the antenna. The appropriate T-R switch output is routed to the receiver by S5A. *Caution:* When S3 is in the cw position, there is no load connected to the ssb exciter input terminal. Likewise, there is no load on the cw input connector when S3 is in the ssb position.

A SOLID-STATE LINEAR AMPLIFIER

In this section a 15-watt solid-state linear amplifier for 3.5 to 30 MHz is described. A filter at the amplifier output attenuates the harmonic energy. With the proper filter in place, no tuning is necessary for complete coverage of each band. The circuit utilizes two transistors that are available surplus for $2.99 each.[1] The amplifier delivers 15-watts peak power for ssb operation, or 15 watts on cw. The collector efficiency from 3.5 to 30 MHz is no lower than 50 percent, but is approximately 57 percent on 80 meters. Intermodulation distortion products for a two-tone test signal are down 30 dB from pep at all frequencies of operation. The amplifier showed a minimum gain of 16 dB. A maximum power of 375 mW is required to drive the amplifier to 15-watts output. This excitation power is easily obtainable with a Class A driver.

A push-pull amplifier circuit is employed with suitable forward base bias to eliminate cross-over distortion (see Fig. 1). The input and output transformers are designed to match the base impedance to a 50-ohm input impedance, and the collector load impedance to the 50-ohm output impedance. Since the gain of the transistors decreases as the frequency of operation increases, a compensating network is placed at the amplifier input to attenuate the drive to the transistors as the operating frequency is lowered. The maximum SWR looking into the compensating circuit is 1.2:1, providing a constant 50-ohm load for the exciter.

[1] Poly Paks, P.O. Box 942M, Lynnfield, MA 01940.

In a push-pull circuit there is inherent cancelation of the even harmonics. Laboratory measurements for the circuit in Fig. 1 show that all harmonics are in excess of 20 dB below the fundamental signal. This figure is not acceptable for harmonic rejection, so a low-pass filter design (Fig. 5) is shown that does provide sufficient attenuation of the harmonics. As long as the filter output is terminated by a 50-ohm load, the filter input looks like 50-ohms below the filter cutoff frequency. No tuning is necessary when changing frequency within any given band. A bank of four filters can be constructed to cover the 80- through 10-meter ham bands. (Only one filter is needed for both the 10- and 15-meter bands.) Band changing is accomplished simply by switching in the appropriate filter for the band of operation. If the builder is interested in only one band the remaining filters need not be constructed.

Construction of the input and output transformers is somewhat unconventional although not too difficult. The transformers are built by placing two cylinders of 3E2A ferrite material side by side and running the wires for the windings through the two holes in the cylinders as shown in Fig. 2. The wire running from A to A′ would be one turn on the primary with the wire from B to B′ being one turn on the secondary. Since the ferrite cylinders aren't available at a reasonable price, they can be constructed by stacking two toroids together for each cylinder of the output transformer and four toroids together for the input transformer. The Ferroxcube series 266 toroids are used for the

Topside view of the linear amplifier with the compensating network attached by means of BNC hardware.

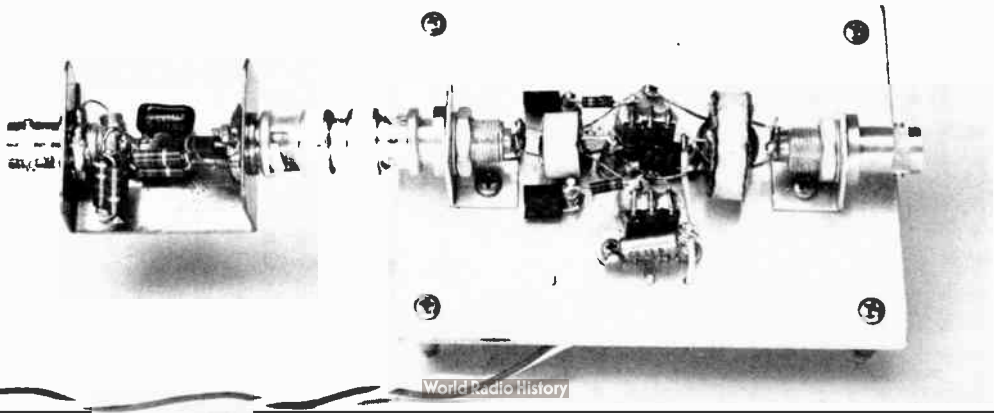

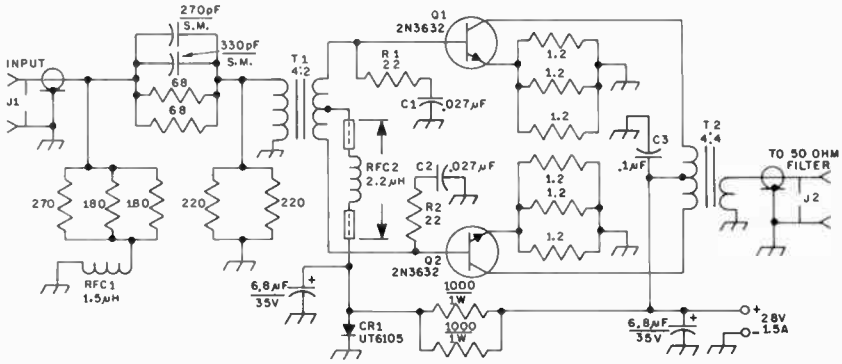

Fig. 1 — Schematic diagram of the amplifier. Resistance is in ohms, resistors are 1/2 watt unless otherwise indicated, except for R1 and R2 which are 1/4 watt. SM = silver mica. Polarized capacitors are electrolytic. C1, C2, and C3 are Aerovox Hi-*Q* units, type CK05 (available from Newark Electronics, Chicago, IL, catalog No. 101). RFC1 and RFC2 are small encapsulated chokes. See text for discussion of other components shown here.

output transformer, and the series 1041 toroids are used for the input transformer.[2] In order to reduce flux leakage the center winding of the primary of the output transformer (and the secondary of the input transformer) should be made of braid similar to the shield-diameter of small coaxial cable. A broadband match to a low-impedance termination is readily achieved with these transformers.

Following is a step-by-step procedure for fabricating the output transformer. First, slip a 1-inch-long piece of braid over a 2-inch-long 10-32 screw, preferably one that does not take solder easily. Next, place two of the cores over the braid, pushing the cores tightly against each other. Now, flare out the ends of the braid on each end of the cores and flow solder in the flared portions of the braid as shown in Fig. 3. After this step is completed the excess braid can be clipped close to the edge of the cylinders at one end. When both cylinders are constructed they can be individually wrapped with tape and then taped together side by side. On the end where the braid was left extending over the edge of the core, a solder connection is made to join the two cylinders electrically. Of course, some pruning is necessary in order to get the two cylinders mechanically close to each other. When this step is completed, the point where the braid from the two cylinders is joined is the center tap of the transformer primary. If a total of 2 turns is required on each side of the center tap, the braid from the center tap to one end of one of the cylinders is a half a turn. Therefore, 1 1/2 more turns of No. 22 enameled wire must be added by tacking the wire with solder to the end of the braid and running the wire through the holes left in the cylinders after removing the 10-32 screws. Similarly, 1 1/2 turns are added from the other cylinder end. Fig. 4 shows the transformer. The secondary is wound by running 4 turns of wire through the same two holes in the cylinders but with the leads extending out the opposite side of the transformer.

The transformer at the input of the amplifier is constructed in a similar manner with a 4:2 turns ratio. In this case the smaller Ferroxcube toroid core, series 1041, can be used. These cylinders are made by stacking 4 cores on top of each other. With a total of two turns required on the secondary, only 1/2 turn of enameled wire is needed to complete the winding once the braid is through the cylinders. No. 28 wire is used on the input transformer. Four more turns of wire (with the leads extending out the other end of the transformer) make up the primary winding of the input transformer.

The amplifier is constructed on a 1/8-inch-thick aluminum plate, 4 inches long by 3 inches wide. This plate should provide an adequate heat sink for the duty cycle incurred with ssb or cw operation. The transistors are mounted 2 inches from the end

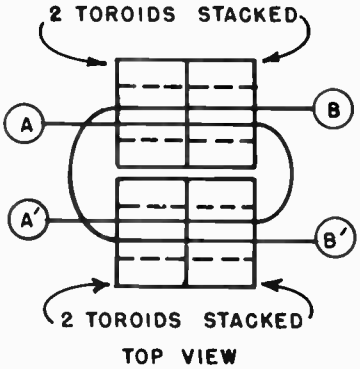

Fig. 2 — Illustration of how the broadband transformers are assembled.

[2] Elna Ferrite Laboratories, Inc., 9 Pine Grove St., Woodstock, NY 12498.

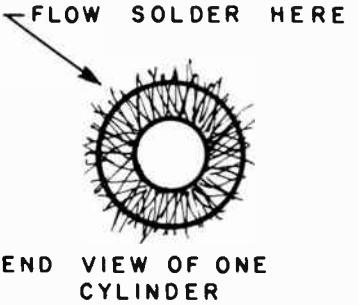

Fig. 3 — Drawing of end view of one cylinder of the broadband transformers.

of the plate and 3/8 inch off the center line running the length of the plate. Very short leads are maintained for the emitter resistors to minimize lead inductance. The two 1000-ohm biasing resistors, the biasing diode, and the 6.8-μF capacitor are located on the bottom side of the plate. The biasing diode used in the original circuit is a Unitrode UT6105 rectifier diode. This diode is fairly expensive, but any silicon rectifier diode rated at 3 A and 50 volts PRV should work.

A circuit diagram of the filters is shown in Fig. 5, and component values are given in Table 6C. L1 and C2 should be resonated at the proper frequency before being placed in the rest of the circuit. L1, L2, and L3 can be wound on toroid cores available from Amidon[3] when the inductance values are too large for convenient air coils.

Before applying voltage to the amplifier, a check should be made with an ohmmeter to insure there are no shorts between the primary and secondary of the transformer. If all looks well at that step, connect a 50-ohm load and apply dc voltage. Always terminate the amplifier output with a 50-ohm load before applying voltage; otherwise instability may result. The amplifier idling current, with no drive applied, should be approximately 100 mA. If this value is not obtained, there is probably a short in one of the transformers. If the correct idling current is present, apply drive (375 mW cw or peak ssb), and 15 watts of rf power should appear at the output. If a two-tone signal is used for ssb tests, the output level will indicate only 7.5 watts on an averaging-type wattmeter. Now, the amplifier is ready to connect to the antenna (one with an SWR below 1.5:1). Operation in any part of any band is acceptable, as long as the filter for that band is used and the SWR is low.

3 Amidon Associates, 12033 Otsego Street, North Hollywood, CA 91607.

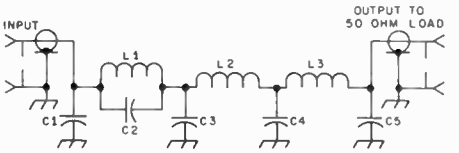

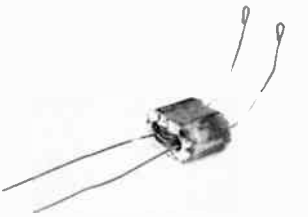

Fig. 4 — Close-up view of the input transformer used in the circuit of Fig. 1.

Bibliography

Gray and Graham, *Radio Transmitters*, McGraw-Hill Publishing Company, 1961.

Hejhall, *Solid-State Linear Amplifier Design*, Motorola Semiconductor Products Application Note AN-546, 1971.

Orr, *Radio Handbook*, Editors and Engineers, 1970.

Pitzalis *et al*, "Broadband 60-W HF Linear Amplifier," *IEEE Journal of Solid-State Circuits*, June, 1971.

RCA Power Circuits, RCA Electronics Components, Division of RCA, 1969.

Single Sideband for the Radio Amateur, American Radio Relay League, 5th Edition, 1970.

Southerland, *Care and Feeding of Power Grid Tubes*, Eimac Division of Varian, 1967.

TABLE 6C

Impedance at f_u	*80M f_u = 4 MHz*	*40M f_u = 8 MHz*	*20M f_u = 15 MHz*	*15M & 10M f_u = 30 MHz*
C1 −j50	800 pF	400 pF	210 pF	105 pF
C2 −j60	680 pF	340 pF	180 pF	90 pF
C3 −j18	2200 pF	1100 pF	590 pF	300 pF
C4 −j14	2800 pF	1400 pF	750 pF	380 pF
C5 −j35	1150 pF	575 pF	300 pF	150 pF
L1 +j30	1.2 μH	0.59 μH	0.32 μH	0.16 μH
L2 +j42	1.6 μH	0.80 μH	0.45 μH	0.23 μH
L3 +j50	2.0 μH	1.0 μH	0.52 μH	0.26 μH
Resonant Frequency for L1 & C2	5.55 MHz	11.1 MHz	20.8 MHz	41.6 MHz

Table of values for the filter shown schematically in Fig. 1.

VHF and UHF Transmitting

Before planning operation on the frequencies above 50 MHz, we should understand the FCC rules, as they apply to the bands we are interested in. The necessary information is included in the allocations table in the first chapter of this *Handbook* and in *The Radio Amateur's License Manual*, but some points will bear emphasis here.

Standards governing signal quality in the 50-MHz band are the same as for all lower amateur frequencies. Frequency stability, modulation, keying characteristics, and freedom from spurious products must be consistent with good engineering practice. Simultaneous amplitude and frequency modulation is prohibited. These standards are not *imposed by law* on amateur frequencies from 144 MHz up. This is not to say that we should not strive for excellence on the higher bands, as well as on 50 MHz, but it is important to remember that we may be cited by FCC for failing to meet the required standards in 50-MHz work.

A sideband signal having excessive bandwidth, an a-m signal whose frequency jumps when modulation is applied, an fm signal that is also amplitude-modulated, a cw signal with excessive keying chirp or objectionable key clicks – any of these is undesirable on any band, but they are all *illegal* on 50 MHz. Any of them could earn the operator an FCC citation in 50-MHz work. And misinterpretation of these points in an FCC examination could cost the would-be amateur his first ticket.

The frequencies above 50 MHz were once a world apart from the rest of amateur radio, in equipment required, in modes of operation and in results obtained. Today these worlds blend increasingly. Thus, if the reader does not find what he needs in these pages to solve a transmitter problem, it will be covered in the hf transmitting chapter. This chapter deals mainly with aspects of transmitter design and operation that call for different techniques in equipment for 50 MHz and up.

DESIGNING FOR SSB AND CW

Almost universal use of ssb for voice work in the hf range has had a major impact on equipment design for the vhf and even uhf bands. Many amateurs have a considerable investment in hf sideband gear. This equipment provides accurate frequency calibration and good mechanical and electrical stability. It is effective in cw as well as ssb communication. These qualities being attractive to the vhf operator, it is natural for him to look for ways to use his hf gear on frequencies above 50 MHz.

Thus increasing use is being made of vhf accessory devices, both ready made and home-built. This started years ago with the vhf converter, for receiving. Rather similar conversion equipment for transmitting has been widely used since ssb began taking over the hf bands. Today the hf trend is to one-package stations, called transceivers. The obvious move for many vhf men is a companion box to perform both transmitting and receiving conversion functions. Known as transverters, these are offered by several transceiver manufacturers. They are also relatively simple to build, and are thus likely projects for the home-builder of vhf gear.

Transverter vs. Separate Units

It does not necessarily follow that what is popular in hf work is ideal for vhf use. Our bands are wide, and piling-up in a narrow segment of a band, which the transceiver encourages, is less than ideal use of a major asset of the vhf bands – spectrum space. Separate ssb exciters and receivers, with separate vhf conversion units for transmitting and receiving, tend to suit our purposes better than the transceiver-transverter combination, at least in home-station service.

Future of Other Modes

It should not be assumed that ssb will monopolize voice work in the world above 50 MHz in the way that it has the amateur voice frequencies below 29 MHz. Sideband is unquestionably far superior to other voice modes for weak-signal DX work, but where there is plenty of room, as there is in all vhf and higher bands, both amplitude and frequency modulation have merit. A low-powered a-m transmitter is a fine construction project for a vhf beginner, and fm has been gaining in popularity rapidly in recent years. A reprint of a very popular 4-part *QST* series describing a complete two-band vhf station for the beginner is available from ARRL for 50 cents.

The decline in use of amplitude modulation has been mainly in high-powered stations. The heavy-iron modulator seems destined to become a thing of the past, but this should not rule out use of a-m. Many ssb transceivers are capable of producing high-quality a-m, and one linear amplifier stage can build as little as 2 watts a-m output up to 200 watts or so, with excellent voice quality, if the equipment is adjusted with care. It should be remembered that the transmitting converter (or heterodyne unit as it is often called) is not a sideband device only. It will serve equally well with a-m, fm or cw drive.

THE OSCILLATOR-MULTIPLIER APPROACH

Where modes other than ssb are used, most vhf transmitters have an oscillator, usually in the hf range, one or more frequency multiplier stages, and at least one amplifier stage. The basics of this type of transmitter are well covered in the preceding chapter, so only those aspects of design that are of special concern in vhf applications will be discussed here.

Oscillators

Because any instability in the oscillator is multiplied along with the frequency itself, special attention must be paid to both mechanical and electrical factors in the oscillator of a vhf transmitter. The power source must be pure dc, of unvarying voltage. The oscillator should run at low input, to avoid drift due to heating. Except where fm is wanted, care should be taken to isolate the oscillator from the modulated stage or stages.

Crystal oscillators in vhf transmitters may use either *fundamental* or *overtone* crystals. The fundamental type is normally supplied for frequencies up to 18 MHz. For higher frequencies the overtone type is preferred in most applications, though fundamental crystals for up to about 30 MHz can be obtained on order. The fundamental crystal oscillates on the frequency marked on its holder. The marked frequency of the overtone type is approximately an odd multiple of its fundamental frequency, usually the third multiple for frequencies between 12 and 54 MHz, the fifth for roughly 54 to 75 MHz, and the seventh or ninth for frequencies up to about 150 MHz. Crystals are seldom used for direct frequency control above about 75 MHz in amateur work, though crystals for 144-MHz oscillation can be made.

Most fundamental crystals can be made to oscillate on at least the third overtone, and often higher, with suitable circuits to provide feedback at the desired overtone frequency. Conversely, an overtone crystal is likely to oscillate on its fundamental frequency, unless the tuned circuit is properly designed. An overtone crystal circuit should be adjusted so that there is no oscillation at or near one-third of the frequency marked on the holder, nor should there be energy detectable on the *even* multiples of the fundamental frequency.

It should be noted that the overtone is not necessarily an exact multiple of the fundamental. An 8000-kHz fundamental frequency does not guarantee overtone oscillation on 24.000 MHz, though it may work out that way in some circuits, with some crystals. Overtone crystals can also be made to oscillate on other overtones than the intended one. A third-overtone 24-MHz crystal can be used for its fifth overtone, about 40 MHz, or its seventh, about 56 MHz, by use of a suitable tuned circuit and careful adjustment of the feedback.

Variable-frequency oscillators are in great demand for vhf-transmitter frequency control, but except where heterodyning to a higher frequency is used, as opposed to frequency multiplication, the VFO is generally unsatisfactory. Small instabilities, hardly noticeable in hf work, are multiplied to unacceptable proportions in the oscillator-multiplier type of transmitter. The fact that many such unstable VFO rigs are on the air, particularly on 6 meters, does not make them desirable, or even *legal*. Only careful attention to all the fine points of VFO design and use can result in satisfactory stability in vhf transmitters.

Frequency Multipliers

Frequency multiplication is treated in Chapter 6. The principal factor to keep in mind in multipliers for the vhf bands is the probability that frequencies other than the desired harmonics will be present in the output. These can be sources of TVI in vhf transmitters. Examples are the 9th harmonic of 6 MHz and the 7th harmonic of 8 MHz, both falling in TV Channel 2. The 10th harmonic of 8-MHz oscillators falling in Channel 6 is a similar problem. These unwanted multiples can be held down by the use of the highest practical degree of selectivity in interstage coupling circuits in the vhf transmitter, and by proper shielding and interstage impedance matching. This last is particularly important in transistor frequency multipliers and amplifiers. More on avoiding TVI will be found later in this chapter, and in the chapter on interference problems.

The varactor multiplier (see Chapter 4) is much used for developing power in the 420-MHz band. Requiring no power supply, it uses only driving power from a previous stage, yet quite high orders of efficiency are possible. Two examples are shown later in this chapter. A 220-MHz exciter tuned down to 216 MHz makes a good driver for a 432-MHz varactor doubler. More commonly used is a tripler such as the one described in this chapter, using 144-MHz drive. The output of a varactor multiplier tends to have appreciable amounts of power at other frequencies than the desired, so use of a strip-line or coaxial filter is recommended, whether the multiplier drives an amplifier or works into the antenna directly.

AMPLIFIER DESIGN AND OPERATION

Amplifiers in vhf transmitters all once ran Class C, or as near thereto as available drive levels would permit. This was mainly for high-efficiency cw, and quality high-level amplitude modulation. Class C is now used mostly for cw or fm, and in either of these modes the drive level is completely uncritical, except as it affects the operating efficiency. The influence of ssb techniques is seen clearly in current amplifier trends. Today Class AB_1 is popular and most amplifiers are set up for linear amplification, for ssb and – to a lesser extent – a-m. The latter is often used in connection with small amplitude-modulated vhf transmitters, having their own built-in audio equipment. Where a-m output is available from the ssb exciter, it is also useful with the Class AB_1 linear amplifier, for only a watt or two of driver output is required.

There is no essential circuit difference between the AB_1 linear amplifier and the Class-C amplifier;

only the operating conditions are changed for different classes of service. Though the plate efficiency of the AB_1 linear amplifier is low in a-m service, this type of operation makes switching modes a very simple matter. Moving toward the high efficiency of Class C from AB_1, for cw or fm service, is accomplished by merely raising the drive from the low AB_1 level. In AB_1 service the efficiency is typically 30 to 35 percent. No grid current is ever drawn. As the grid drive is increased, and grid current starts to flow, the efficiency rises rapidly. In a well-designed amplifier it may reach 60 percent, with only a small amount of grid current flowing. Unless the drive is run well into the Class C region, the operating conditions in the amplifier can be left unchanged, other than the small increasing of the drive, to improve the efficiency available for cw or fm. No switching or major adjustments of any kind are required for near-optimum operation on ssb, a-m, fm or cw, if the amplifier is designed primarily for AB_1 service. If high-level a-m were to be used, there would have to be major operating-conditions changes, and very much higher available driving power.

Tank-Circuit Design

Except in compact low-powered transmitters, conventional coil-and-capacitor circuitry is seldom used in transmitter amplifiers for 144 MHz and higher frequencies. U-shaped loops of sheet metal or copper tubing, or even copper-laminated circuit board, generally give higher Q and circuit efficiency at 144 and 220 MHz. At 420 MHz and higher, coaxial tank circuits are effective. Resonant cavities are used in some applications above 1000 MHz. Examples of all types of circuits are seen later in this chapter. Coil and capacitor circuits are common in 50-MHz amplifiers, and in low-powered, mobile and portable equipment for 144 and even 220 MHz.

Stabilization

Most vhf amplifiers, other than the grounded-grid variety, require neutralization if they are to be satisfactorily stable. This is particularly true of AB_1 amplifiers, which are characterized by very high power sensitivity. Conventional neutralization is discussed in Chapter 6. An example is shown in Fig. 7-1A.

A tetrode tube has some frequency where it is inherently neutralized. This is likely to be in the lower part of the vhf region, for tubes designed for hf service. Neutralization of the opposite sense may be required in such amplifiers, as in the example shown in Fig. 7-1B.

Conventional screen bypassing methods may be ineffective in the vhf range. Series-tuning the screen to ground, as in 7-1C, may be useful in this situation. A critical combination of fixed capacitance and lead length may accomplish the same result. Neutralization of transistorized amplifiers is not generally practical, at least where bipolar transistors are used.

Parasitic oscillation can occur in vhf amplifiers, and, as with hf circuits, the oscillation is usually at a frequency considerably higher than the operating

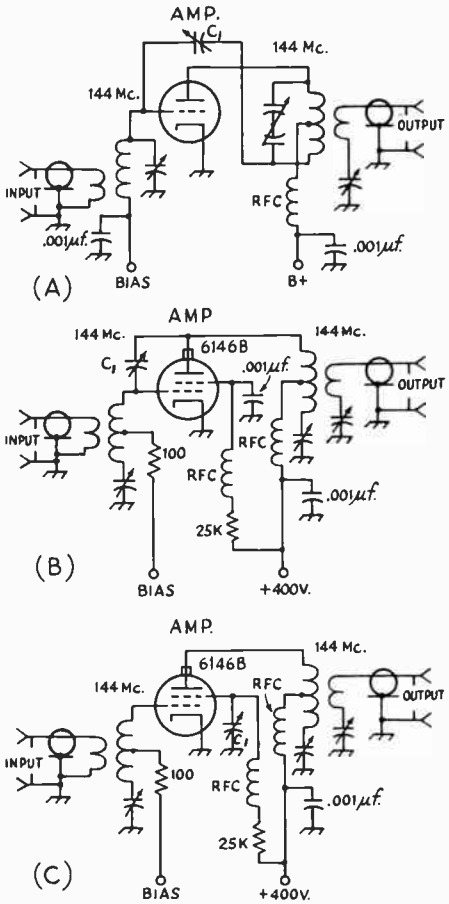

Fig. 7-1 — Representative circuits for neutralizing vhf single-ended amplifiers. The same techniques are applicable to stages that operate in push-pull. At A, C1 is connected in the manner that is common to most vhf or uhf amplifiers. The circuits at B and C are required when the tube is operated above its natural self-neutralizing frequency. At B, C1 is connected between the grid and plate of the amplifier. Ordinarily, a short length of stiff wire can be soldered to the grid pin of the tube socket, then routed through the chassis and placed adjacent to the tube envelope, and parallel to the anode element. Neutralization is effected by varying the placement of the wire with respect to the anode of the tube, thus providing variable capacitance at C1. The circuit at C is a variation of the one shown at B. It too is useful when a tube is operated above its self-neutralizing frequency. In this instance, C1 provides a low-Z screen-to-ground path at the operating frequency. RFC in all circuits shown are vhf types and should be selected for the operating frequency of the amplifier.

frequency, and it cannot be neutralized out. Usually it is damped out by methods illustrated in Fig. 7-2. Circuits A and B are commonly used in 6-meter transmitters. Circuit A may absorb sufficient fundamental energy to burn up in all but low-power transmitters. A better approach is to use

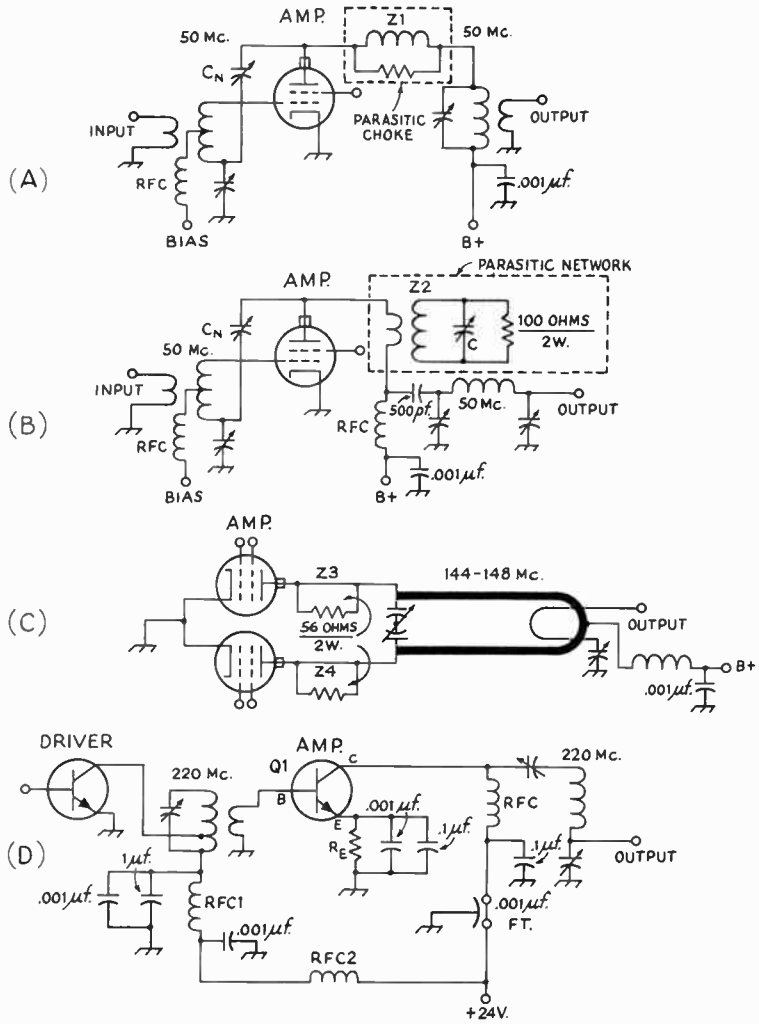

Fig. 7-2 — Representative circuits for vhf parasitic suppression are shown at A, B, and C. At A, Z1 (for 6-meter operation) would typically consist of 3 or 4 turns of No. 14 wire wound on a 100-ohm 2-watt non-inductive resistor. Z1 overheats in all but very low power circuits. The circuit at B, also for 6-meter use, is more practical where heating is concerned. Z2 is tuned to resonance at the parasitic frequency by C. Each winding of Z2 consists of two or more turns of No. 14 wire — determined experimentally — wound over the body of a 100-ohm 2-watt (or larger) noninductive resistor. At C, an illustration of uhf parasitic suppression as applied to a 2-meter amplifier. Noninductive 56-ohm 2-watt resistors are bridged across a short length of the connecting lead between the tube anode and the main element of the tank inductor, thus forming Z3 and Z4.

The circuit at D illustrates how bypassing for both the operating frequency and lower frequencies is accomplished. Low-frequency oscillation is discouraged by the addition of the 0.1 μF disk ceramic capacitors. RFC1 and RFC2 are part of the decoupling network used to isolate the two stages. This technique is not required in vacuum-tube circuits.

the selective circuit illustrated at B. The circuit is coupled to the plate tank circuit and tuned to the parasitic frequency. Since a minimum amount of the fundamental energy will be absorbed by the trap, heating should no longer be a problem.

At 144 MHz and higher, it is difficult to construct a parasitic choke that will not be resonant at or near the operating frequency. Should uhf parasitics occur, an effective cure can often be realized by shunting a 56-ohm 2-watt

resistor across a small section of the plate end of the tuned circuit as shown in Fig. 7-2, at C. The resistor should be attached as near the plate connector as practical. Such a trap can often be constructed by bridging the resistor across a portion of the flexible strap-connector that is used in some transmitters to join the anode fitting to the plate-tank inductor.

Instability in solid-state vhf and uhf amplifiers can often be traced to oscillations in the lf and hf regions. Because the gain of the transistors is very high at the lower frequencies, instability is almost certain to occur unless proper bypassing and decoupling of stages is carried out. Low-frequency oscillation can usually be cured by selecting a bypass-capacitor value that is effective at the frequency of oscillation and connecting it in parallel with the vhf bypass capacitor in the same part of the circuit. It is not unusual, for example, to employ a 0.1-μF disk ceramic in parallel with a .001-μF disk capacitor in such circuits as the emitter, base, or collector return. The actual values used will depend upon the frequencies involved. This technique is shown in Fig. 7-2D. For more on transmitter stabilization, see Chapter 6.

TIPS ON AB_1 LINEAR AMPLIFIERS

As its name implies, the function of a linear is to amplify an amplitude-modulated signal in a manner so that the result is an exact reproduction of the driving signal. (Remember, ssb is a form of amplitude modulation.) The nature of the a-m signal with carrier is such that linear amplification of it is inherently an inefficient process, in terms of power input to power output, which is the conventional way of looking at amplifier efficiency. But when all factors are considered, particularly the very small exciter power required and elimination of the cumbersome and expensive high-level plate-modulation equipment, "efficiency" takes on a different meaning. Viewed in this way, the Class-AB_1 a-m linear has only two disadvantages: it is incapable of providing as much power output (within the amateur power limit of 1 kW) as the high-level-modulated amplifier, and it requires considerable skill and care in adjustment.

The maximum plate efficiency possible with an AB_1 a-m linear is about 35 percent. The power output in watts that is possible with a given amplifier tube is roughly half its rated plate dissipation. If the first factor is exceeded the result is poor quality and splatter. If the second is ignored, the tube life is shortened markedly.

There being no carrier to worry about in ssb operation, the linear amplifier can run considerably higher efficiency in amplifying ssb signals, and the popularity of ssb has brought the advantages of the linear amplifier for all classes of service into focus. The difference between a-m with carrier and ssb without carrier, in the adjustment of a linear, is mainly a matter of the drive level. Drive can never be run up to the point where the stage begins to draw grid current, but it can run close with ssb, whereas it must be held well below the grid-current level when the carrier is present.

With a-m drive the plate and screen currents must remain steady during modulation. (The screen current may be negative in some amplifiers, so observation of it is simpler if the screen-current meter is the zero-center type.) The plate, screen and grid meters are the best simple indicator of safe AB_1 operation, but they do not show whether or not you are getting all you can out of the amplifier. The signal can be monitored in the station receiver, if the signal in the receiver can be held below the point at which the receiver is overloaded. Cutting the voltage from a converter amplifier stage is a good way to do this. But the only way to know for sure is to use an oscilloscope.

One that can be used conveniently is the Heath Monitor Scope, any version. Some modification of the connections to this instrument may be needed, to prevent excessive rf pickup and resultant pattern distortion, when using it for vhf work. Normally a coupling loop within the scope, connected between two coaxial fittings on the rear of the instrument, is used. The line from the transmitter to the antenna or dummy load runs through these two fittings. For vhf service, a coaxial T fitting is connected to one of these terminals, and the line is run through it, only. With full power it may even be necessary to remove the center pin from the T fitting, to reduce the input to the scope still further, particularly in 144-MHz service.

Really effective adjustment of the linear amplifier, whether with ssb or a-m drive, involves many factors. The amplifier must be loaded as heavily as possible. Its plate and grid circuits must be tuned carefully for maximum amplifier output. (Detuning the grid circuit is *not* the way to cut down drive.) If the power level is changed, all operating conditions must be checked carefully again. Constant metering of the grid, screen and plate currents is very helpful. One meter, switched to the various circuits, is definitely not recommended. A relative-power indicator in the antenna line is a necessity.

All this makes it appear that adjustment of a linear is a very complex and difficult process, but with experience it becomes almost second nature, even with all the points that must be kept in mind. It boils down to keeping the amplifier adjusted for maximum power output, and the drive level low enough so that there is no distortion, but high enough so that maximum efficiency is obtained. Practice doing this with the amplifier running into a dummy load, and the process will soon become almost automatic. Your amateur neighbors (and perhaps TV viewers nearby, as well) will appreciate your cooperation!

About Driver Stages

If the amplifier is capable of reproducing the driving signal exactly, it follows that the driver quality must be above reproach. This is quite readily assured, in view of the low driving power required with the AB_1 linear. Only about two watts exciter power is needed to drive a grounded-cathode AB_1 linear of good design, so it is possible to build excellent quality and modulation charac-

Fig. 7-3 — The 6-meter transverter, with shield cover in place. Large knobs are for amplifier tuning and loading. Small knob, lower right is for a meter sensitivity control. The meter switch is just above it.

teristics into the a-m driver or ssb exciter. If this is done, and the amplifier is operated properly, the result can be a signal that will bring appreciative and complimentary reports from stations worked, on both a-m and ssb.

VHF TVI CAUSES AND CURES

The principal causes of TVI from vhf transmitters are as follows:

1) Adjacent-channel interference in Channels 2 and 3 from 50 MHz.

2) Fourth harmonic of 50 MHz in Channels 11, 12 or 13, depending on the operating frequency.

3) Radiation of unused harmonics of the oscillator or multiplier stages. Examples are 9th harmonic of 6 MHz, and 7th harmonic of 8 MHz in Channel 2; 10th harmonic of 8 MHz in Channel 6; 7th harmonic of 25-MHz stages in Channel 7; 4th harmonic of 48-MHz stages in Channel 9 or 10; and many other combinations. This may include i-f pickup, as in the cases of 24-MHz interference in receivers having 21-MHz i-f systems, and 48-MHz trouble in 45-MHz i-fs.

4) Fundamental blocking effects, including modulation bars, usually found only in the lower channels, from 50-MHz equipment.

5) Image interference in Channel 2 from 144 MHz, in receivers having a 45-MHz i-f.

6) Sound interference (picture clear in some cases) resulting from rf pickup by the audio circuits of the TV receiver.

There are other possibilities, but nearly all can be corrected completely, and the rest can be substantially reduced.

Items 1, 4 and 5 are receiver faults, and nothing can be done at the transmitter to reduce them, except to lower the power or increase separation between the transmitting and TV antenna systems. Item 6 is also a receiver fault, but it can be alleviated at the transmitter by using fm or cw instead of a-m phone.

Treatment of the various harmonic troubles, Items 2 and 3, follows the standard methods detailed elsewhere in this *Handbook*. It is suggested that the prospective builder of new vhf equipment familiarize himself with TVI prevention techniques, and incorporate them in new construction projects.

Use as high a starting frequency as possible, to reduce the number of harmonics that might cause trouble. Select crystal frequencies that do not have harmonics in TV channels in use locally. Example: The 10th harmonic of 8-MHz crystals used for operation in the low part of the 50-MHz band falls in Channel 6, but 6-MHz crystals for the same band have no harmonic in that channel.

If TVI is a serious problem, use the lowest transmitter power that will do the job at hand. Keep the power in the multiplier and driver stages at the lowest practical level, and use link coupling in preference to capacitive coupling. Plan for complete shielding and filtering of the rf sections of the transmitter, should these steps become necessary.

Use coaxial line to feed the antenna system, and locate the radiating portion of the antenna as far as possible from TV receivers and their antenna systems.

50-MHZ TRANSVERTER

With the increase in use of ssb on the vhf bands, there is much interest in adapting hf ssb gear to use on higher frequencies. The transverter of Fig. 7-3 will provide transceiver-style operation on 50 MHz, when used with a low-powered 28-MHz transceiver. The output of the transmitter portion is about 40 watts, adequate for much interesting work. It can be used to drive an amplifier such as the grounded-grid 3-500Z unit described later in this chapter. The receiving converter combines simplicity, adequate gain and noise figure, and freedom from overloading problems.

Circuit Details

The receiving front end uses a grounded-gate JFET rf amplifier, Q1 in Fig. 7-5, followed by a dual-gate MOSFET mixer, Q2. Its 22-MHz injection voltage is taken from the oscillator and buffer stages that also supply injection for transmitter mixing. The difference frequency is 28 MHz, so the transceiver dial reading bears a direct 28-50 relationship to the 50-MHz signal being received. For more detail on the converter construction and adjustment, see Fig. 9-9 and associated text. The transverter uses the grounded-gate rf amplifier circuit, while the converter referred to above has a grounded source, but they are quite similar otherwise.

The triode portion of a 6LN8, V1A, is a

22-MHz crystal oscillator. The pentode, V1B, is a buffer, for isolation of the oscillator, and increased stability. Injection voltage for the receiving mixer is taken from the buffer output circuit, L8, through a two-turn link, L9, and small-diameter coax, to gate 2 of the mixer, through a 10-pF blocking capacitor.

The grid circuit of the 6EJ7 transmitting mixer, V2, is tuned to 22 MHz and is inductively coupled to the buffer plate circuit. The 28-MHz input is applied to the grid circuit through a link around L11, and small-diameter coax. The mixer output, L12, is tuned to the sum frequency, 50 MHz, and coupled to a 6GK6 amplifier, V3, by a bandpass circuit, L12 and L13. The 6GK6 is bandpass-coupled to the grid of a 6146 output stage, V4. This amplifier employs a pi-network output stage.

The 6146 plate dissipation is held down during the receiving periods by fixed bias that is switched in by relay K1. The mixer and driver tubes have their screen voltage removed during receiving, by the same relay, which also switches the antenna and 28-MHz input circuits for transmitting and receiving. The relay is energized by grounding pin 7 of P1 through an external switch, or by the VOX relay in the transceiver.

Construction

A 7 X 9 X 2-inch aluminum chassis is used for the transverter, with a front panel 6 inches high, made of sheet aluminum. The top and sides are enclosed by a one-piece cover of perforated aluminum. The output-stage tuning control, C5, is on the upper left of the panel, 2 inches above the chassis. The loading control, C6, is immediately below, under the chassis. The meter, upper right, monitors either 6146 plate current or relative output, as selected by the switch, S1, immediately below it. A sensitivity control for calibrating the output-metering circuit completes the front-panel controls.

The output connector, J2, is centered on the rear apron of the chassis, which also has the input jack, J1, the 8-pin connector, P1, and the bias-adjusting control mounted on it.

The meter is a 1-mA movement, with multiplier resistors to give a full-scale reading on a current of 200 mA. The front cover snaps off easily, to allow calibration marks to be put on as desired.

An enclosure of perforated aluminum, 3 1/4 inches high, 4 inches wide and 4 3/4 inches long shields the 6146 and its plate circuit. There is also an L-shaped shield around the 6146 socket, under the chassis.

The receiving converter is built on a 2 1/2 X 4 1/4-inch etched board, and mounted vertically in a three-sided shield of sheet aluminum. Before mounting the converter shield, be sure to check for clearance with the terminals on the meter. Remember, the meter has full plate voltage on it when the switch is set to read plate current, even when the transverter is in the receiving mode.

Testing of the transverter was done with the General-Purpose Supply for Transceivers, described in the power supply chapter. Separate provision must be made for 12 volts dc for the receiving converter.

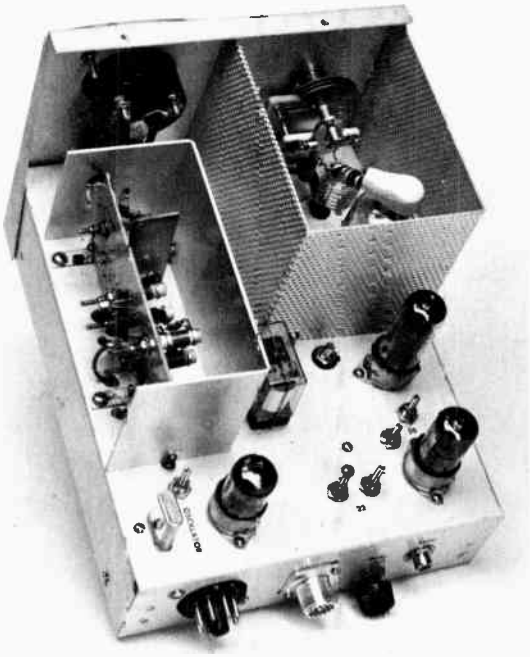

Fig. 7-4 — Top view of the transverter. The receiving converter is inside the shield at the left. The 22-MHz crystal oscillator and buffer are in the left rear portion of the chassis. In the right corner is the transmitting mixer. Above it is the first amplifier. The 6146 output amplifier is in the shielded compartment at the left front.

Injection voltage, signal input and i-f output connections to the converter are made with small-diameter coax. These and the 12-volt wiring are brought up through small holes in the chassis, under the converter. As seen in Fig. 9-11, the input JFET, Q1, is on the left. The mixer is near the center. The 28-MHz output coils, L5 and L6, are just to the right of Q2.

Note that there are two sets of relay contacts, K1D and K1F, in series in the receiver line. This guarantees high isolation of the receiver input, to protect the rf amplifier transistor. Another protective device is the diode, CR1, across the coil of the relay. If there are other relays external to this unit that use the same 12-volt supply, it is advisable to put diodes across their coils also. Spikes of several volts can be induced with making and breaking of the coil circuits.

Adjustment

A dip meter is very useful in the preliminary tuning. Be sure that L7 and L8 are tuned to 22 MHz and L12 and L13 are tuned to 50 MHz. The driver and output circuits should also be tuned to 50 MHz. Check to be sure that slug-tuned coils really tune *through* the desired frequency. Quite

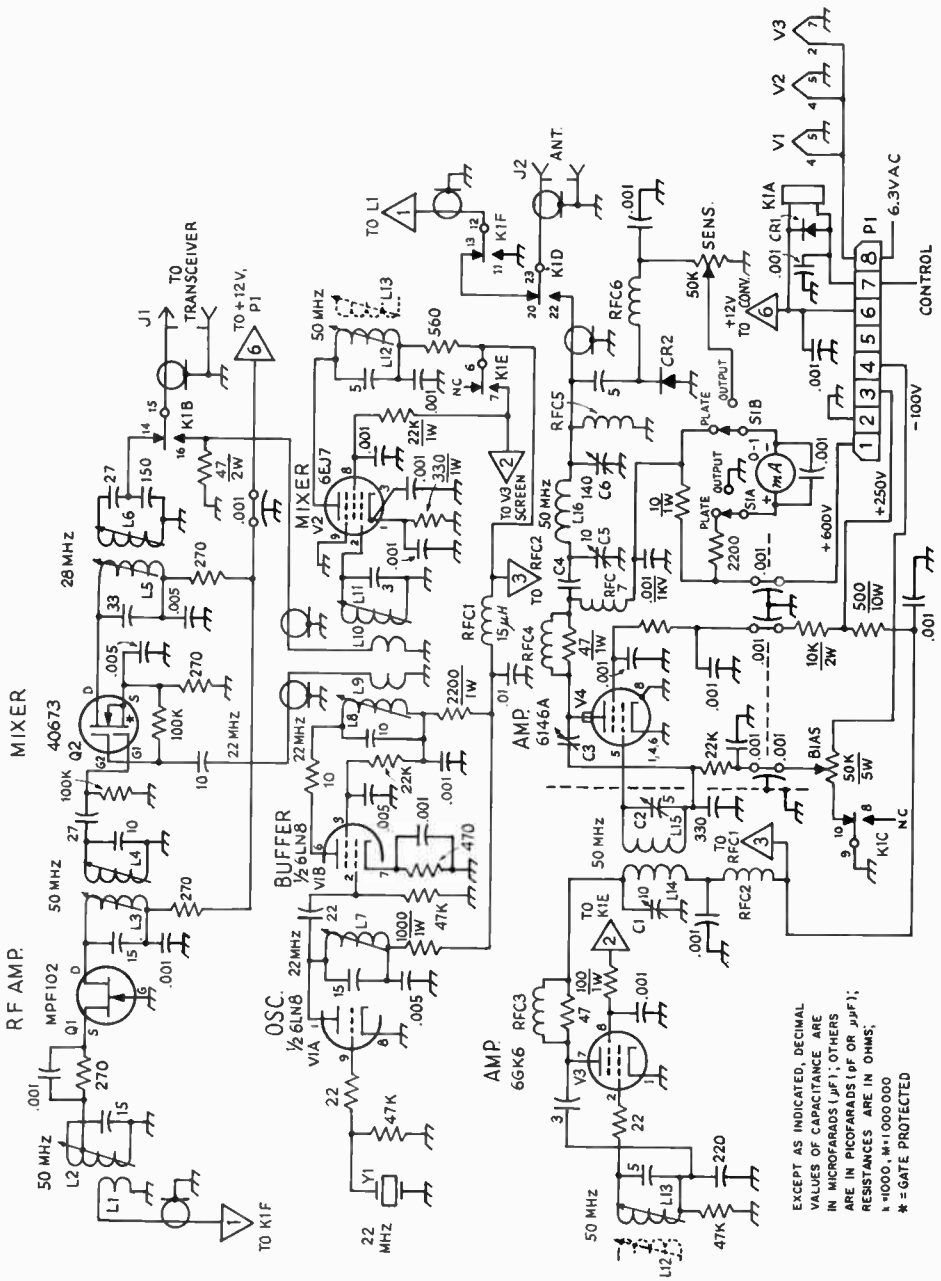

often troubles are eventually traced to coils where the circuit is only approaching resonance as the core centers in the winding. Such a circuit will appear to work, but drive will be low, and spurious outputs will tend to be high. This is a common trouble in overtone oscillators, with slug-tuned coils.

Once the circuits have been set approximately, apply heater and plate voltage to the oscillator, and tune L7 for best oscillation, as checked with a wavemeter or a receiver tuned to 22 MHz. Connect a 28-MHz receiver to the input, J1, and apply dc to the converter. It should be possible to hear a strong local station or test signal immediately. Peak all coils for best reception, then stagger-tune L5 and L6 for good response across the first 500 kHz of the band.

Before applying plate voltage to the 6146, it is advisable to protect the tube during tuneup by inserting a 1500- or 2000-ohm 25-watt resistor in series with the plate supply. Connect a 50-ohm load to the output jack, and energize K1. Adjust

Fig. 7-5 — Schematic diagram and part information for the 50-MHz transverter.
C1 — 10-pF subminiature variable (Hammarlund MAC-10).
C2 — 5-pF subminiature variable (Hammarlund MAC-5).
C3 — 2 1/2-inch length No. 14 wire, parallel to and 1/4 inch away from tube envelope. Cover with insulating sleeve.
C4 — 500-pF 3000-volt disk ceramic.
C5 — 10-pF variable (Johnson 149-3, with one stator and one rotor plate removed).
C6 — 140-pF variable (Millen 22140).
CR1 — 1N128 diode.
CR2 — 1N83A diode.
J1 — Phono jack.
J2 — Coaxial jack, SO-239.
K1 — 6-pole double-throw relay, 12-volt dc coil.
L1 — 2 turns small insulated wire over ground end of L2.
L2, L3, L4 — 10 turns No. 24 enamel closewound on J. W. Miller 4500-4 iron-slug form.
L5, L6 — 12 turns No. 24 enamel on J. W. Miller 4500-2 iron-slug form.
L7, L8, L11 — Iron-slug coils adjusted for 4.1, 5.5 and 5.5 µH, respectively (Miller 4405).
L9, L10 — 2 turns small insulated wire over ground ends of L8 and L11.
L12, L13 — 1-µH iron-slug coil J. W. Miller 4403, 3 turns removed.
L14 — 7 turns No. 20, 1/2-inch dia, 1/2 inch long (B & W 3003).
L15 — Like L14, but 6 turns.
L16 — 6 turns No. 20, 5/8-inch dia, 3/4 inch long (B & W 3006).
P1 — 8-pin power connector.
RFC1 — 68-µH rf choke (Millen 34300).
RFC2 — 8.2-µH rf choke (Millen J-300).
RFC3 — 5 turns No. 22 on 47-ohm 1/2-watt resistor.
RFC4 — 4 turns No. 15 on 47-ohm 1-watt resistor.
RFC5, RFC6 — 8.2-µH rf choke (Millen 34300).
S1 — Dpdt toggle.
Y1 — 22-MHz overtone crystal (International Crystal Co., Type EX).

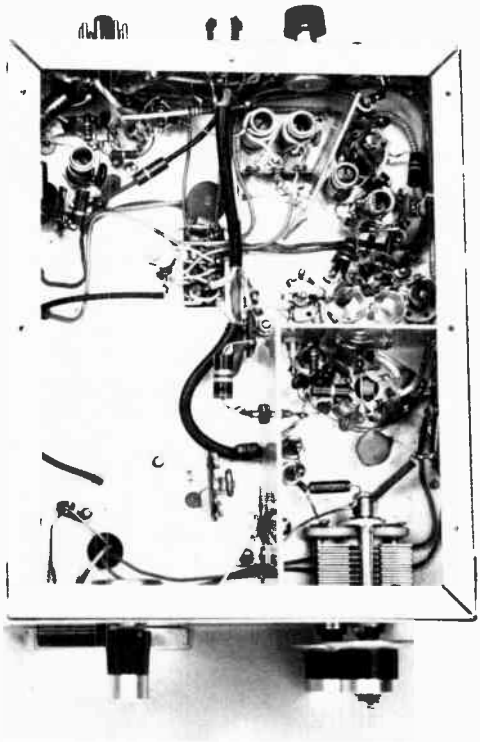

Fig. 7-6 — Bottom of the transverter, with the 6146 socket inside the shield compartment at the right. Three sets of inductively-coupled circuits are visible in the upper-right corner. The first two, near the top of the picture, are on 22 MHz. Next to the right and down, are the mixer plate and first-amplifier grid circuits. The self-supporting 6GK6 plate and 6146 grid coils are just outside the amplifier shield compartment. The large variable capacitor is the loading control.

the bias control for 25 to 30 mA plate current. Apply a small amount of 28-MHz drive. A fraction of a watt, enough to produce a dim glow in a No. 47 pilot lamp load, will do. Some output should be indicated on the meter, with the sensitivity control fully clockwise. Adjust the amplifier tuning and loading for maximum output, and readjust all of the 50-MHz circuits likewise.

After the circuits have been peaked up, adjust the bandpass circuits by applying first a 28.1-MHz input and then a 28.4-MHz input, and peaking alternate coils until good operation is obtained over the range of 50.0 to 50.5 MHz. Most ssb operation currently is close to 50.1 MHz, so uniform response across a 500-kHz range is not too important, if only this mode is used. If the 10-meter transceiver is capable of a-m operation, and you want to use this mode, coverage up to 50.5 with uniform output may be more desirable. Adjust the position of the neutralizing wire, C3, for minimum rf in L16, with drive on, but no screen or plate voltage on the 6146.

Now apply full plate voltage. With no drive, set the bias adjustment for a 6146 plate current of 25 to 30 mA. With the dummy load connected, experiment with the amount of drive needed to reach maximum plate current. Preferably, use a scope to check for flat-topping as the drive is increased. An output of 40 watts, cw, should be obtainable. The quality of the ssb signal is determined first by the equipment generating it, but it can be ruined by improper operation. Over driving the mixer or the 6146, and improper loading of the amplifier will cause distortion and splatter. Continuous monitoring with a scope is the best preventive measure.

Because of the frequencies mixed, and the bandpass coupling between stages, the output of the transverter is reasonably clean. Still, use of an antenna coupler or filter between the transverter and antenna is good insurance. The same treatment of the transverter output is desirable when driving a linear amplifier.

Fig. 7-7 — Panel view of the 2-meter transverter. This version is patterned after a transmitting converter design by K9UIF. The on-off switches for ac and dc sections of the power supply are mounted on the front panel of the unit as are the pilot lamps and plate meter for the PA stage. The tuning controls for the various stages are accessible from the top of the chassis.

A 2-METER TRANSVERTER

This transverter is designed to be used with any 14- or 28-MHz ssb exciter capable of delivering approximately 20 watts peak output. It is stable both in terms of frequency and general operating conditions. It can provide up to 20 watts PEP output at 144 MHz — sufficient, say, for driving a pair of 4CX250 tubes in Class C for cw operation, or the same pair of tubes can be operated AB_1 to provide 1200 watts PEP input with this unit as a driver. The output signal is clean and TVI should not be experienced except where receiver faults are involved.

It is not recommended that beginners attempt this project since vhf ssb circuits require special care in their construction and operation, sometimes a requirement that is a bit beyond the inexperienced builder.

How It Operates

Starting with V1A, the oscillator, Fig. 7-8, a 43.333-MHz or overtone crystal is used at Y1 to provide the local-oscillator signal for the exciter. Output from V1A is amplified by V1B to a suitable level for driving the tripler, V2. 130-MHz or 116-MHz energy is fed to the grids of V3, a 6360 mixer, by means of a bandpass tuned circuit, L3,C1, and L4,C2. The selectivity of this circuit is high, thus reducing unwanted spurious energy at the mixer grids.

Output from the exciter is supplied through an attenuator pad at J1 and is injected to the mixer, V3, at its cathode circuit, across a 270-ohm resistor. The attenuator pad can be eliminated if a very low-power exciter is to be used. The values shown in Fig. 7-8 were chosen for operation with a Central Electronics 20A exciter operating at full input, or nearly so. The amount of driving power needed at the cathode of V3 is approximately 4 or 5 watts PEP.

B1 — Small 15-volt battery.
C1 — 20-pF miniature variable (E. F. Johnson 160-110 suitable).
C2, C3, C5 — 10-pF per section miniature butterfly (E. J. Johnson 167-21 suitable).
C4 — 5-pF per section miniature butterfly (E. F. Johnson 160-205 suitable).
C6 — 20-pF miniature variable (same as C1).
I1, I2 — 117-Vac neon panel lamp assembly.
J1-J3, incl. — SO-239-style coax connector.
J3 — Closed-circuit phone jack.
L1 — 15 turns No. 28 enam. wire, close-wound, on 1/4-inch dia slug-tuned form (Millen 69058 form suitable).
L2 — 12 turns No. 28 enam. wire, close-wound, on same type form as L1.
L3 — 5 turns No. 18 wire space-wound to 7/8-inch length, 1/2-inch dia, center-tapped.
L4 — 3 turns No. 18 wire, 1/2-inch dia, 3/8-inch long, center-tapped.
L5 — 5 turns No. 18 wire, 1/2-inch dia, 5/8-inch long, center-tapped.
L6 — 3 turns No. 18 wire, 1/2-inch dia, 5/8-inch long, center-tapped.
L7 — 4 turns No. 18 wire, 1/2-inch dia, 1/2-inch long, center-tapped.
L8 — 1-turn link of insulated hookup wire, 1/2-inch dia, inserted in center of L7.
L9 — 2 turns of insulated hookup wire over L3.
M1 — 0 to 200-mA dc meter.
P1 — 11-pin chassis-mount male plug (Amphenol 86PM11).
R1 — 50,000-ohm linear-taper, 5-watt control.
RFC1-RFC3, incl. — 2.7-μH rf choke (Millen 34300-2.7).
S1, S2 — Spst rocker-type switch (Carling TIGK60).
Y1 — 43.333-MHz third-overtone crystal for 14-MHz input. If a 28-MHz transceiver will be used, a 38.667-MHz crystal is required.

After the 130-MHz and 14-MHz signals are mixed at V3, the *sum* frequency of 144-MHz is coupled to the grids of V4, the PA stage, by means of another bandpass tuned circuit — further reducing spurious output from the exciter. PA stage V4 operates in the AB_1 mode. Its idling plate current is approximately 25 mA. The plate current rises to approximately 100 mA at full input.

If cw operation is desired, the grid-block keying circuit in the mixer stage (J3) can be included. If ssb operation is all that is contemplated, the minus 100-volt bias line can be eliminated along with J3, R1, and the shaping network at J3. In that case the 15,000-ohm grid resistor from the center tap of L4 would be grounded to the chassis.

The receiving section uses a low-noise uhf MOSFET as the rf amplifier and a second dual-gate MOSFET as the mixer. See Fig. 7-10. The gate-1 and drain connections of the rf amplifier are tapped down on the tuned circuits so that unconditional stability is achieved without neutralization. Oscillator energy is sampled with a two-turn link wound over L3. A short length of RG-58A/U carries the injection energy to Q2. The converter is built in a 5 X 2 1/4 X 2 1/4-inch box constructed from four pieces of double-sided circuit board that have been soldered on all abutting edges. The unit is mounted on the transverter front panel.

Fig. 7-8 — Schematic diagram of the transmitting converter portion of the transverter. Fixed-value capacitors are disk ceramic unless noted differently. The polarized capacitor is electrolytic. Fixed-value resistors are 1/2-watt carbon unless otherwise noted.

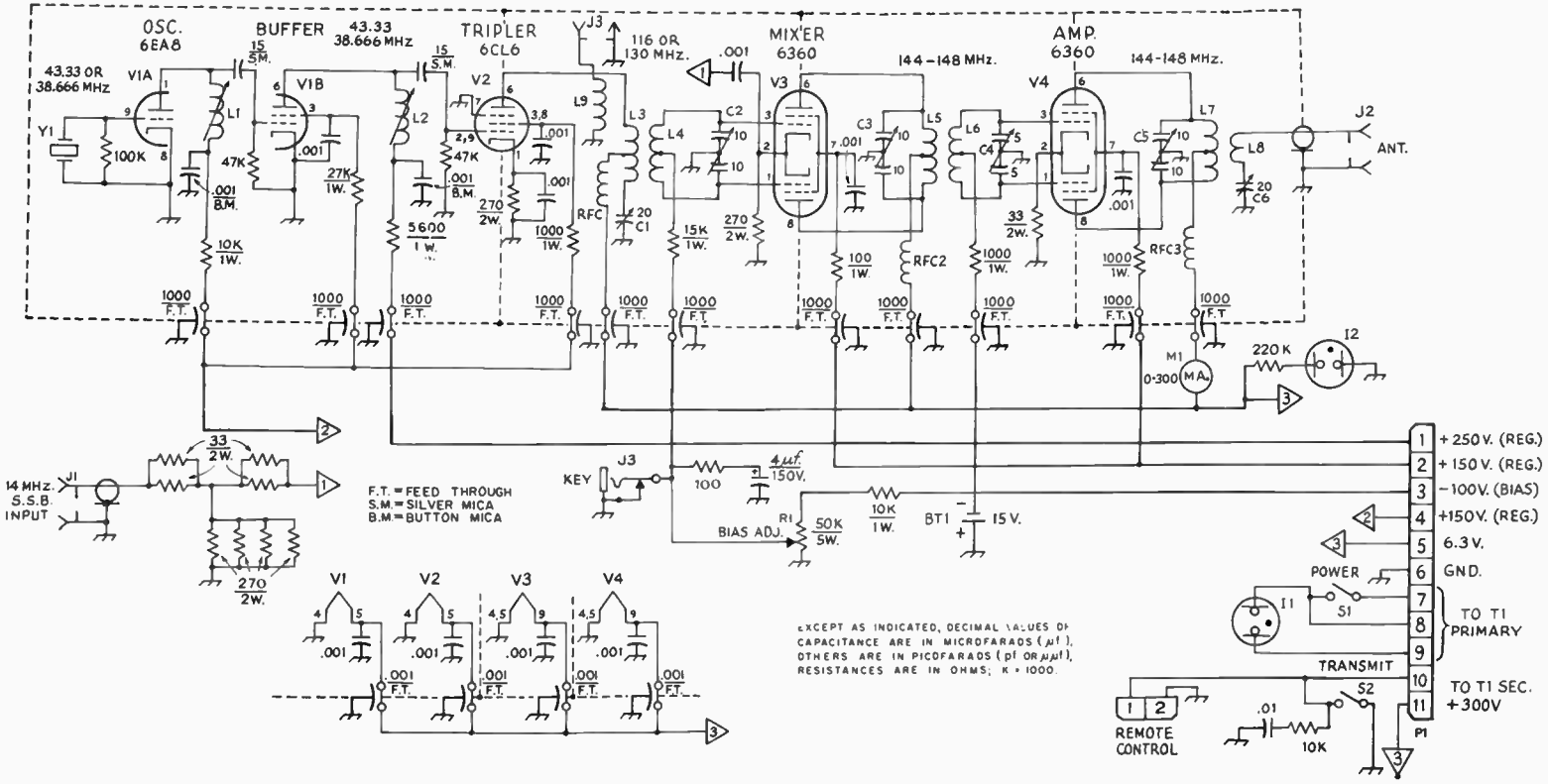

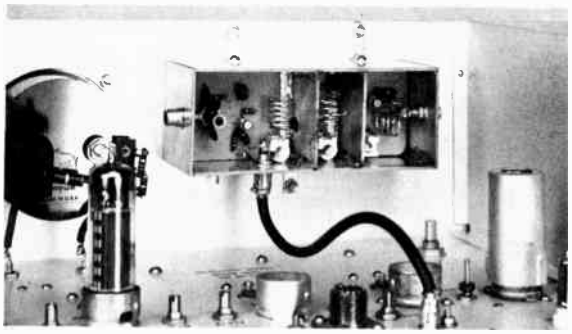

Fig. 7-9 — Inside view of the converter. Shields are used between the rf amplifier input and output circuits, and between the latter and the mixer input circuit. The cable entering the bottom side of the enclosure carries the oscillator injection energy. Output to the associated receiver or transceiver is taken through the jack to the left.

Construction Notes

The photographs show the construction techniques that should be followed for duplicating this equipment. The more seasoned builder should have no difficulty changing the prescribed layout to fit his particular needs, but the shielding and bypassing methods used here should be adhered to even if changes are made.

An 8 X 12 X 3-inch aluminum chassis is used for this equipment. An internal chassis, 5 inches wide, 3 inches deep, and 12 inches long, is made from flashing copper and installed along one edge of the main chassis. This method makes it possible to solder directly to the chassis for making positive ground connections rather than rely on mechanical joints. Shield partitions are made of copper and are soldered in place as indicated on the schematic diagram and in the photo. An aluminum bottom plate is used to enclose the underside of the chassis for confining the rf.

Feedthrough capacitors are used to bring power leads into the copper compartment. Though this adds somewhat to the overall cost of the project, it provides excellent bypassing and decoupling, thus reducing unwanted interstage coupling. It also contributes to TVI reduction. Most surplus houses stock feedthrough capacitors, and offer them at reasonable cost.

Tune-Up

An antenna-changeover relay and a set of normally-open relay contacts, both operated by the exciter, must be provided. The remote control leads, from P2, should be connected to the relay contacts. With power applied to the converter, L12 should be set for maximum noise input to the transceiver. Then, using a signal generator or off-the-air weak signal, peak L9, L10 and L11 for best signal-to-noise ratio.

The transmitter section can be powered by the circuit of Fig. 7-12, or the builder can design a supply of his own choice. Regulated voltages are

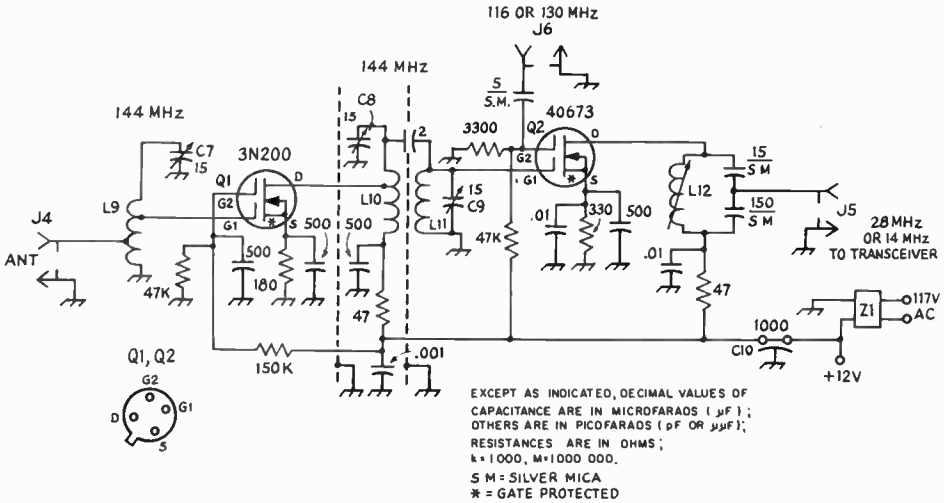

Fig. 7-10 — Diagram of the converter section. Resistors as 1/4-watt composition and capacitors are disk ceramic, except as noted otherwise.

C7-C9, incl. — Air variable, pc mount (Johnson 189-0505-105).

C10 — Feedthrough type.

L9 — 4 1/2 turns, No. 18 tinned wire, 1/4-inch ID. Tap at 1 1/2 turns up from the ground end for the antenna connection, and at 3 turns for the Q1 gate.

L10 — 4 1/2 turns, No. 18 tinned wire, 1/4-inch ID. Tap at 3 turns up from the cold end for the Q1 drain connection.

L11 — 5 turns No. 18 tinned wire, 1/4-inch ID.

L12 — 1.99-2.42-μH slug-tuned coil, pc mount, for 28-MHz output (J. W. Miller 46A226CPC); or, for 14-MHz output, 7.3-8.9-μH (J. W. Miller 46A826CPC).

J4-J6, incl. — Phono type.

Q1, Q2 — RCA dual-gate MOSFET.

Z1 — 12-V miniature power supply, transistor radio type.

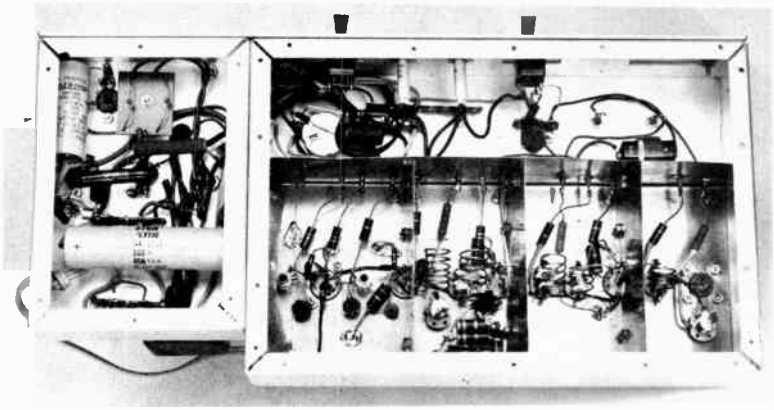

Fig. 7-11 — Looking into the bottom of the chassis, the rf section is enclosed in a shield compartment made from flashing copper. Additional divider sections isolate the input and output tuned circuits of the last three stages of the exciter. Feedthrough capacitors are mounted on one wall of the copper compartment to provide decoupling of the power leads.

recommended for best operation.

With a dummy load connected to J2, apply operating voltage. Couple a wavemeter to L1 and tune the oscillator plate for maximum output. Then, detune the slug of L1 slightly (toward minimum inductance) to assure reliable oscillator starting. Couple the wavemeter to L2 and tune for peak output. With the wavemeter applied to L4, adjust C1 and C2 for maximum indicated output.

The next step is to connect the transceiver to J1 and supply just enough drive to cause a rise in PA plate current of a few milliamperes. Tune C3 and C4 for maximum indicated plate current at M1, then adjust C5 and C6 for maximum power output to the dummy load. C1, C2, C3 and C4 should be readjusted at this point for maximum plate current of the PA stage. Use only enough drive to bring the PA plate current up to 100 mA at maximum dc input power.

A closed-circuit keying jack is used at J3 so that the mixer stage is not biased to cutoff during voice operation. Inserting the key permits full bias to be applied, thus cutting off V3. R1 should be adjusted for complete cutoff of V3 when the key is open.

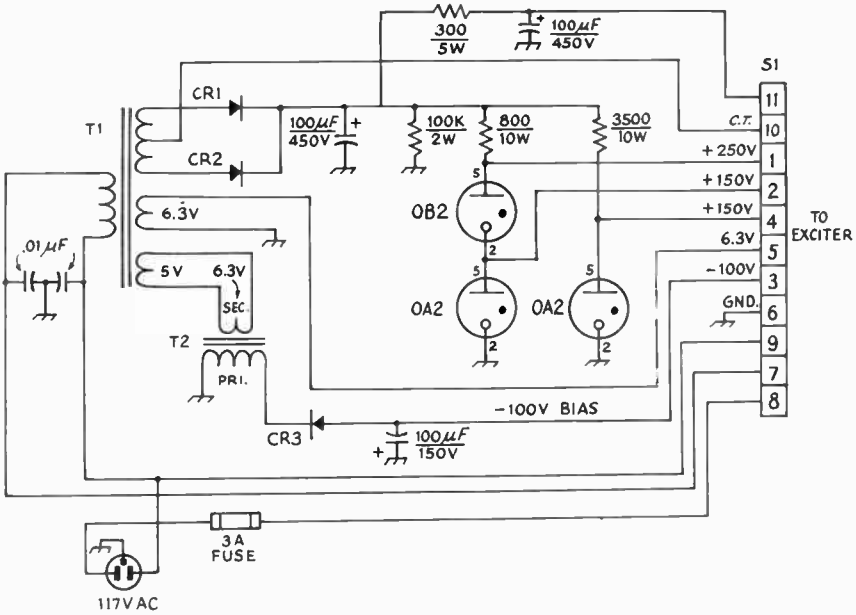

Fig. 7-12 — Schematic of the power supply section. On-off switches for the ac and dc circuits are mounted in the rf deck along with the pilot lamps. Polarized capacitors are electrolytic, others are disk ceramic. CR1 and CR2 are 1000-volt, 1-ampere silicon diodes. CR3 is a 200-PRV 600-mA silicon diode. T1 is a power transformer with a 540-volt ct secondary at 120 mA. Filament windings are 5 volts at 3 A, and 6.3 volts at 3.5 A. T2 is a 6.3-volt, 1-ampere filament transformer connected back to back with the 5-volt winding of T1. S1 is an 11-pin socket (female). A 10,000-ohm resistor and a .01-µF disk capacitor are connected in series between the center tap of T1's secondary and ground for transient suppression when S2 is switched to on. The suppressor is mounted at S2, in the rf deck.

A 500-WATT FM AND CW TRANSMITTER FOR 220 MHZ

This 220-MHz transmitter was designed and built by R. B. Stevens, W1QWJ, and was first described in May 1969 *QST*. It is capable of 300 watts output, cw or fm, or the exciter portion can be used alone to deliver approximately 8 watts output.

The RF Circuits

Looking at the schematic diagram, Fig. 7-15, it will be seen that the first three stages of the transmitter look very much like any vhf transmitter using vacuum tubes. A conventional 6CL6 crystal oscillator, V1, uses 6-, 8- or 12-MHz crystals, multiplying in its plate circuit to 24 MHz (12 MHz crystals should be the fundamental type.) A 6BQ5, V2, triples to 73 MHz, and drives a 2E26 amplifier, V3, straight-through on this frequency. A variable capacitor, C6, across the crystal, permits a small adjustment of the frequency.

A varactor tripler, driven by the 2E26, is used to get up to 220. Requiring no power supply of its own, it is capable of more than enough power output at 220 to drive our 500-watt amplifier.

The output of a varactor multiplier contains harmonics other than the desired one, so a strip-line filter is connected between the varactor output and the final amplifier grid circuit. The filter is a separate assembly mounted on the end of the chassis, visible in two of the photographs. Full details of the filter may be found in any edition of the *VHF Manual*, and in this *Handbook*.

The final amplifier is a 4CX250 series external-anode tube, with a coaxial tank circuit. The B version is used here, but the R and F types have the same mechanical design.

The coaxial plate circuit follows a standard design. Such a tank has extremely high *Q*, and the heavy copper (or brass) construction offers considerable heat sinking. Probably its only disadvantage is the necessity for feeding the high voltage in through some kind of rf bypassing device. This and the other mechanical features of a good coaxial tank are not readily made with the simpler tools. Details of the assembly are given in Fig. 7-19.

The final grid circuit, visible in the end view along with the varactor multiplier and the strip-line filter, is a half-wave strip-line. The fan blows cooling air into the grid compartment, up through the 4CX250 socket, and out through the end of the tank assembly, by way of the hollow inner conductor, L10. The coaxial output fitting, J6, the coupling loop, L11, and its series capacitor, C21, are mounted on a small detachable plate bent to fit the curvature of the coaxial assembly, and mounted near the outer end. The varactor tripler is built into the top of the amplifier grid assembly, and is visible in the end view along with the final grid circuit and the strip-line filter.

[1] Brayley, "Coaxial-Tank Amplifier for 220 and 420 MHz," *QST*, May 1951. Also, *VHF Manual*, Chapter 10.

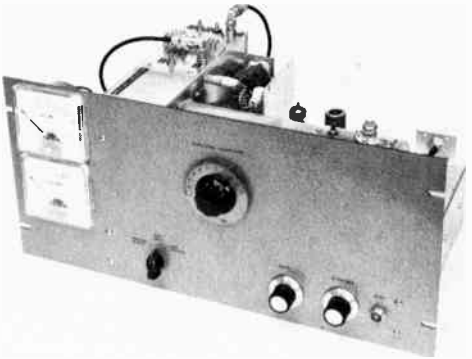

Fig. 7-13 — The 220-MHz transmitter is set up for rack mounting on 8 3/4-inch panel. Meters at the left can be switched to read driver plate, amplifier screen and amplifier plate currents, and amplifier plate voltage.

Generating the Frequency Modulation

Where only a small swing at the control frequency is needed, as in a vhf or uhf transmitter having a high order of frequency multiplication, the modulation can be applied very easily. A voltage-variable capacitor, CR1, changes capacitance in relation to the audio voltage applied across it, and this changing capacitance is used to "pull" the frequency of the crystal oscillator slightly. A good 8-MHz crystal can be pulled about 600 Hz in this way. With 27-times frequency multiplication this gives a maximum deviation in excess of 16 kHz

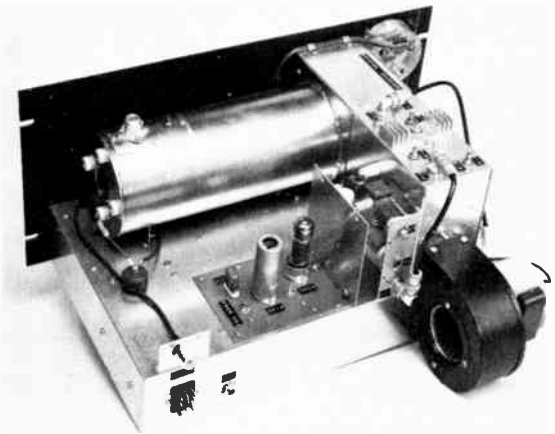

Fig. 7-14 — Rear view of the 220-MHz transmitter. The exciter stages are on a circuit board in the foreground. Chassis at the right side houses the varactor tripler and the amplifier grid circuit. Air blows into this compartment and out through the center conductor of the coaxial plate-circuit assembly.

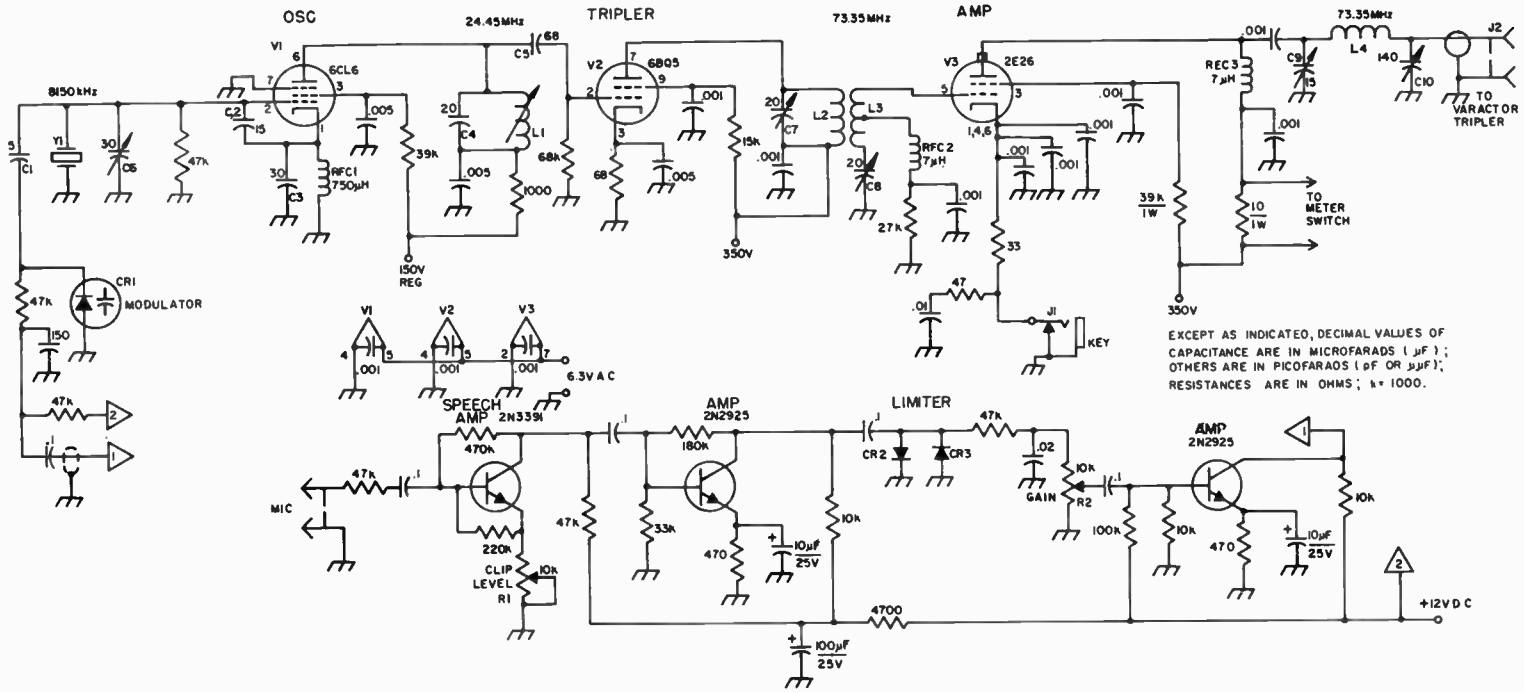

Fig. 7-15 — Schematic diagram and parts information for the W1QWJ 220-MHz exciter and frequency modulator. Capacitors with polarity marked are electrolytic. Components not specified below are marked for text reference purposes. C1 through C5 are dipped mica or silver mica.

C6 — 30-pF miniature trimmer (Johnson 160-130).
C7, C8 — 20-pF miniature trimmer (Johnson 160-110).
C9 — 15-pF variable, double-spaced (Hammarlund HF-15-X).
C10 — 140-pF variable (Hammarlund HF-140).
CR1 — Varicap diode.
CR2, CR3 — Any silicon diode (Motorola 2105 or similar).
J1 — Closed-circuit jack.
J2 — BNC chassis fitting.
L1 — 10 turns No. 22 enamel, closewound on 1/4-inch slug-tuned form.
L2 — 4 turns No. 22, 1/2-inch dia, 7/16 inch long.
L3 — 7 turns No. 22, 1/2-inch dia, 3/8 inch long. Tap 4 turns from grid end.
L4 — 5 turns No. 16, 1/2-inch dia, 1 inch long.
Y1 — 8150-kHz crystal, HC-6/U holder preferred. 6112 kHz or 12223-kHz fundamental crystal also usable. Frequencies given are for low-frequency end of the band. Use C6 for slight frequency adjustment.

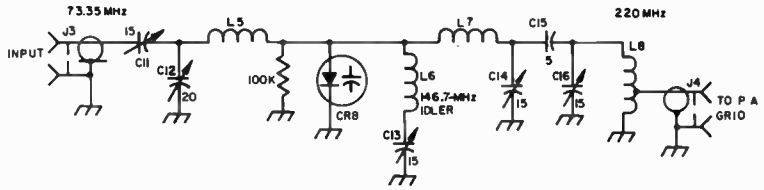

Fig. 7-16 — Circuit of the varactor multiplier, 73 to 220 MHz.

C11, C13, C14, C16 — 15-pF miniature variable (Johnson 160-107). Rotor of C11 must be insulated from chassis.
C12 — 20-pF miniature variable (Johnson 160-110).
C15 — 5-pF ceramic.
L5 — 8 turns No. 16, 1/2-inch dia, 7/8 inch long.
L6 — 4 turns No. 16, 1/2-inch dia, 1/2 inch long.
L7 — 3 turns No. 16, 3/8-inch dia, 3/8 inch long.
L8 — 3 turns No. 16, 3/8-inch dia, 3/8 inch long, tapped at 1 turn from grounded end.
CR8 — Varactor diode (Amperex H4A/1N4885).
J3, J4 — BNC fitting.

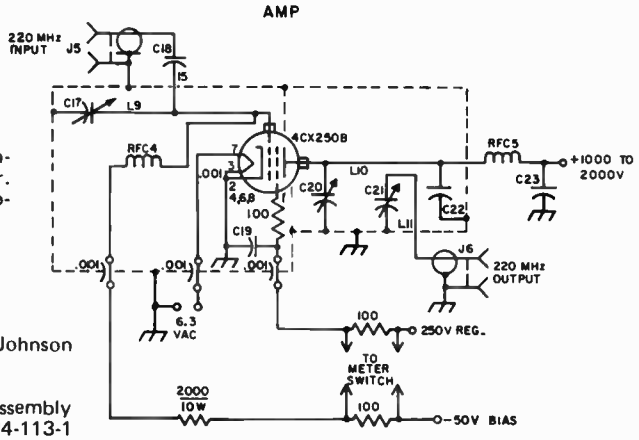

Fig. 7-17 — Schematic diagram and parts information for the 220-MHz final amplifier. Decimal values of capacitance are in microfarads (μF); others in pF.

C17 — 20-pF miniature variable (Johnson 160-110). Stator supports end of L9.
C18 — 15-pF silver mica.
C19 — Capacitor built into socket assembly (Johnson 124-109-1 socket, with 124-113-1 bypass ring and 124-111-1 chimney).
C20 — Disk-type tuning capacitor; see Fig. 7-19.
C21 — 15-pF miniature variable (Johnson 160-110).
C22 — Built-in bypass capacitor; see Fig. 7-19.
C23 — 500-pF, 5-kV or more.
J6 — N-type fitting.
L9 — Brass strip, 1/16 by 3/8 by 6 1/2 inches. Bolts to grid terminal on socket. Tap C18 7/8 inch from grid.
L10 — Coaxial line inner conductor; see Fig. 7-19.
L11 — Output coupling loop made from 3 1/4 inches No. 16. Cover with insulating sleeving and bend to 3/4 inch high and 1 3/4 inch long. See Fig. 7-1.
RFC4, RFC5 — 0.84 μH rf choke (Ohmite Z-235).
J5 — BNC fitting.

at the operating frequency, close to the optimum for most of the fm receivers currently in use in fixed-frequency service on 6 and 2. Lesser deviation, for working into communications receivers, most of them having about a 3-kHz bandwidth today, is merely a matter of applying less audio.

Adjustment and Operation

This is not intended to be a beginner's project, so detailed discussion of the mechanical layout will be omitted. The mechanical arrangement of the components could be altered to suit one's own requirements, since the complete transmitter is made up of many subassemblies. Adjustment for best results may be somewhat strange to anyone who has not had experience with varactor multipliers.

The first step is to get a good 52-ohm load. For the present, it will have to handle a maximum of about 10 watts. A good SWR bridge is also needed for the tests. The first step is to adjust the exciter. Procedure here is like that for any similar lineup of tubes, but the 2E26 must be adjusted for optimum

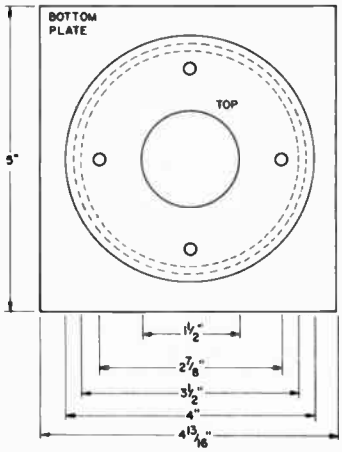

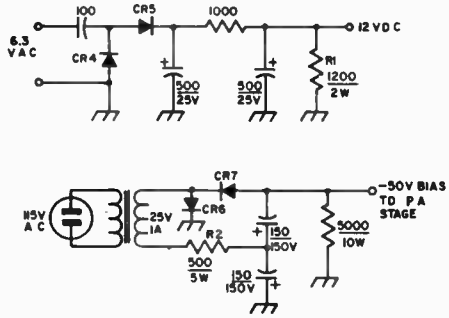

Fig. 7-18 — Circuit details of the built-in power supplies for amplifier bias (lower) and speech amplifier-modulator (upper) for the 220-MHz transmitter. Capacitors with polarity marked are electrolytic. All diodes are 200-volt PRV, 1A. R1 and R2 are approximate values. Select for 12 and minus 50 volts output, respectively. Capacitance is in microfarads.

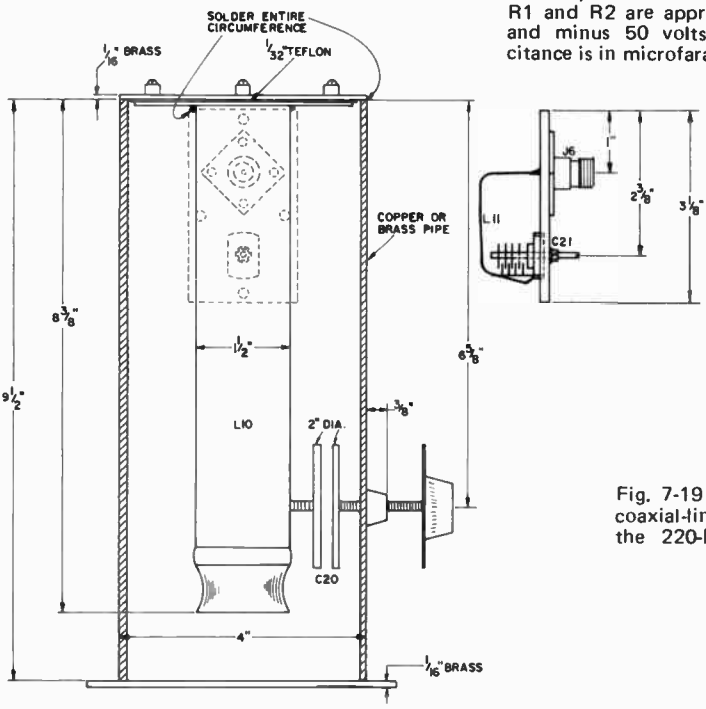

Fig. 7-19 — Details of the coaxial-line plate circuit of the 220-MHz transmitter.

results when working into a 52-ohm load. Once an output of 10 to 12 watts is obtained in this way, leave the tuning of the 2E26 and preceding stages alone thereafter.

Now connect the SWR bridge output to J3 of the varactor multiplier, and tune C11 and C12 for lowest SWR indication. Leave the 2E26 adjustments alone.

Now connect a coaxial cable from J2 to J3, and connect the bridge or wattmeter in a line from J4 to the dummy load. Adjust C13, C14 and C16 for maximum output at 220 MHz. Adjustments in the multiplier interlock, and several passes through all adjustments may be needed for best output. But remember that the 2E26 is set for a 52-ohm load. Leave it alone, and make the multiplier adjustments do the job. An indication of some 8 watts or so of output should be obtained. Part of this will be harmonic energy, however, so the SWR bridge should now be connected between the strip-line filter and the amplifier grid circuit, and the filter adjusted for maximum forward power and the

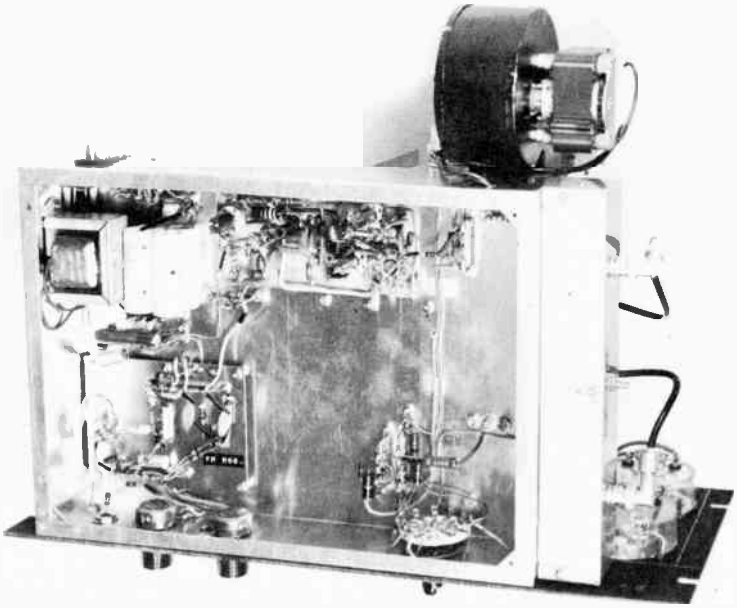

Fig. 7-20 — Looking underneath the chassis of the 220-MHz transmitter, we see the speech amplifier-clipper at the lower left, the exciter circuits across the top, power supply components at the upper left, and meter switching, lower right.

amplifier input circuit for minimum reflected. This should result in maximum grid current in the final amplifier.

It is likely that getting enough grid current for the 4CX250B will not be difficult, as the lineup described gives more than ample drive. Up to 20 mA grid current has been obtained, but not this much is needed. In fact, with fm or cw operation, only a slight increase in efficiency is noted after the drive is raised beyond the point where grid current begins to flow.

Adjustment of the coupling loop, L11, and the loading capacitor, C21, will be fairly critical when striving for the absolute maximum output. Following the manufacturer's recommendations as to maximum plate voltage and current, 2000 volts at 250 mA, resulted in about 320 watts output. Raising the plate current to 300 mA, by increasing the screen voltage, netted 400 watts output. Even at this input the tube seemed to be operating well and the tank circuit did not indicate excessive heating.

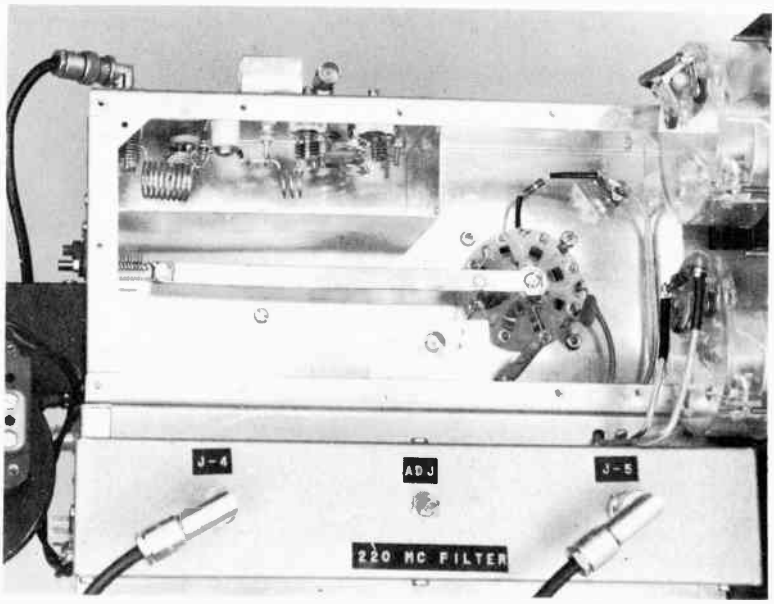

Fig. 7-21 — Looking into the amplifier grid compartment. The varactor tripler is in the upper left portion. Below the compartment is the 220-MHz strip-line filter.

A SIMPLE VARACTOR TRIPLER FOR 432 MHZ

As pointed out in the chapter on semiconductors, a varactor tripler circuit requires the presence of an "idler" circuit tuned to the second harmonic of the fundamental frequency. The fundamental frequency and the second harmonic beat together to give the third harmonic output. This conversion action (rather than distortion action as in a vacuum-tube frequency multiplier) means that an a-m signal can be used to excite a varactor tripler, and the a-m will be maintained in the output at the third harmonic. Thus a 144-MHz a-m signal can be used to drive a varactor tripler to obtain an a-m signal at 432 MHz.

The tripler shown in Fig. 7-22 will deliver about 14 watts at 432 MHz when driven with 20 watts at 144 MHz. It features a "strip line" output circuit for good selectivity and efficiency. Referring to the circuit diagram, Fig. 7-23, C1,C2 form a capacitive-divider input circuit to provide a 50-ohm load for the transmitter driving the tripler. These tune with L1 to 144 MHz. The varactor is an Amperex H4A (1N4885). L2 and C3 tune to 288 MHz to form the idler circuit, and L3,C4 provide coupling adjustment to the strip-line circuit tuned to 432 MHz. L5 and C6 provide output coupling.

The tripler is built in a 5 X 7 X 2-inch chassis. A shield is formed to fit the length of the chassis 2 inches from one wall, forming a 2-inch square trough inside the chassis. A National TPB polystyrene feedthrough connects the varactor to L3.

Details of the strip-line circuit construction are shown in Fig. 7-25. The line is a 5-inch brass strip 1/2 inch wide, having a 1/2-inch "foot" at the bottom for bolting the strip to the chassis. The input and output links are tuned with TV-type ceramic trimmers. The low-potential ends of L3 and L5 are soldered directly to the tops of these trimmers. C5 is made by cutting two 1-inch disks from sheet brass. One disk is soldered to the end of L4, and a mount for the other disk is fashioned from a Miller 4400 coil form. The ceramic form itself is broken off the mount, and the slug removed from the end of the threaded rod. The disk is then soldered to the end of the rod. The coil-form base is mounted on the chassis so that the two disks are opposite each other. For better mechanical stability of the tuning shaft, a 6-32 lock nut can be placed on the shaft.

Tuning Up

A varactor multiplier is simple to tune, provided one has the proper test equipment. But test equipment for 432 MHz is not easy to come by. Most constructors will find they have to spend more time making test gear to check the varactor than in building the multiplier itself. Fig. 7-26 shows two possible test setups for checking a multiplier unit. The first requires a nonreactive 50-ohm dummy load, and the second uses a transmtach with a 300-ohm load. Most of the dummy loads available to amateurs are too reactive at 432 to be any good. The constructor may make his own 50-ohm load from 100 feet of RG-58/U coax. This length of coax, terminated with a 50-ohm, 2-watt composition resistor, will provide a nonreactive load that will handle the power from the varactor multiplier – and give the builder a good lesson in the losses of coax lines!

Another approach is to make a dummy load from carbon resistors and use a transmatch to tune out any reactance in the load. This resonant load, when used with an SWR indicator, will give a check on the harmonic content of the varactor's output. (More about this later.) When the varactor multiplier is working, the transmatch can be used in the station to match Twin-Lead feeders.

The 432-MHz transmatch circuit is shown in Fig. 7-24. It is constructed from a 4 1/2 X 7 3/4-inch piece of sheet copper, with a 1 1/2-inch lip bent on either end. Two hairpin loops are used for L1 and L2. L2 is supported by a 3/4-inch standoff insulator. A crystal socket is used as an output connector as it has the proper pin size and spacing for the popular Twin-Lead connectors. The taps given in Fig. 7-24 for L2 should be good for any low-reactance 300-ohm load. Other impedances will require changing the position of the taps.

In either test setup, a filter is used to insure that the output you are measuring is 432-MHz energy and not some other harmonic. A simple strip-line filter like the unit described in the chapter on Interference with Other Services will do the job. A power indicator is the hardest item of all to come up with. Bird wattmeters are very expensive; it may, however, be possible to borrow one from a local business-radio repairman. Several models of Micromatch-type bridges that work on 432 are available on the surplus market.* One of these units is a good investment for anyone seriously interested in 432 work. If you are not able to get a wattmeter, a simple relative indicator such as a wavemeter can be used at the load.

The SWR bridge between the 144-MHz exciter and the varactor multiplier indicates when the varactor input circuit is properly tuned. The input circuit of any of the varactor multipliers should be adjusted for a minimum SWR reading. Then adjust the idler and output circuits for maximum output on 432 MHz. As the second-harmonic frequency is approached, the idler adjustment will make the output jump up.

The tuning adjustments will vary with changes in the drive level. First adjustments should be made with 10 or 15 watts from the exciter. After all the tuned circuits are adjusted correctly at this power level, the drive may be increased to about 30 watts for the H4A. With higher-power varactors, higher drive levels can be used. For any drive level, the varactor circuits should be tuned for best power output.

If you are using the 432-MHz transmatch, you can get a check on the harmonic output by adjusting the transmatch for a 1:1 SWR between the multiplier and transmatch. Then remove the strip-line filter and recheck the SWR. If the SWR

* Try E. C. Hayden, Bay Saint Louis, Mississippi.

has gone up, you can be sure some harmonic energy is getting out. Often these harmonics will not cause any trouble even when the multiplier is used directly into the antenna, but remember that if they are there you will never see a 1:1 match to your antenna.

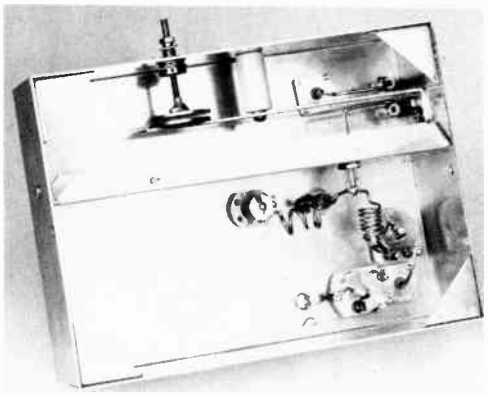

Fig. 7-22 — The 432-MHz varactor tripler. The input circuit is at the lower right and the varactor with its biasing resistor is at the center. The strip-line tank circuit in the trough is tuned by a homemade capacitor described in the text. ▶

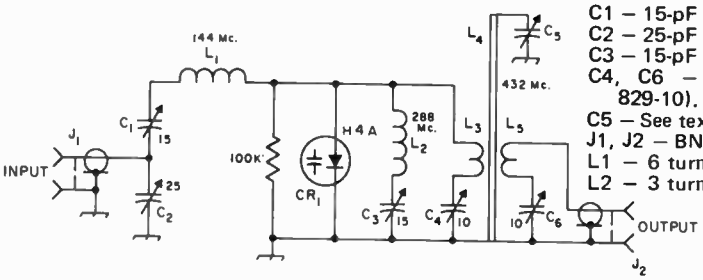

C1 — 15-pF variable (Hammarlund MAPC-15).
C2 — 25-pF variable (Hammarlund MAPC-25).
C3 — 15-pF variable (Johnson 160-107).
C4, C6 — 10-pF ceramic trimmer (Centralab 829-10).
C5 — See text.
J1, J2 — BNC coaxial receptacle, chassis-mounting.
L1 — 6 turns No. 16, 3/8-inch dia, 1/2 inch long.
L2 — 3 turns No. 12, 3/8-inch dia, 3/4 inch long.

▲ Fig. 7-23 — Circuit diagram of the 432-MHz varactor tripler. A strip-line output circuit is used for better attenuation of unwanted harmonics than is possible with lumped-constant circuits.

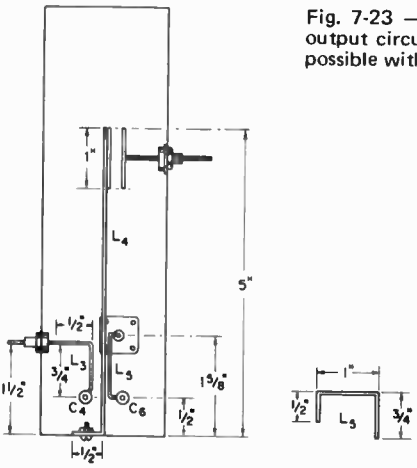

▲ Fig. 7-25 — 432-MHz tank-circuit details for the varactor tripler. L3 and L5 are coupling loops made from No. 14 wire, and L4 is a 1/2-inch wide brass strip.

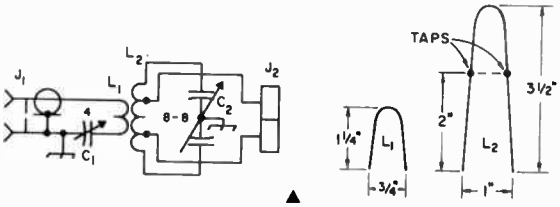

▲ Fig. 7-24 — 432-MHz transmatch diagram.
C1 — 15-pF variable (Johnson 160-107).
C2 — 8-8-pF dual-section variable (Johnson 160-208).
J1 — BNC coaxial receptacle, chassis mounting.
J2 — Crystal socket.
L1 — Hairpin loop No. 14 wire; see above.
L2 — Hairpin loop No. 10 wire; see above; tap as shown.

Fig. 7-26 — Test setups for checking varactor multipliers. ▼

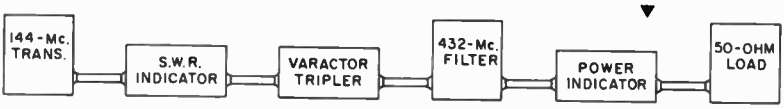

(A)

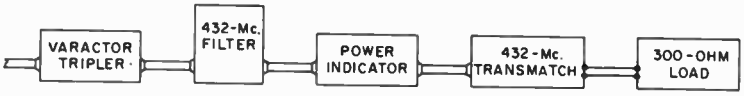

(B)

GROUNDED-GRID 50-MHZ AMPLIFIER

Increasing use of 50-MHz transceivers and transmitters having outputs of 25 watts or more has created a demand for amplifiers to be used with such equipment as the driver. The grounded-grid amplifier of Fig. 7-27 is designed for this use. With 30 watts or more of driving power it will deliver 600 watts cw output. As a Class-B linear, single-tone conditions, its rated PEP output is 750 watts.

Circuit

The Eimac 3-500Z triode is designed for grounded-grid service. As may be seen from Fig. 7-30, driving power is applied to the filament circuit, which must be kept above rf ground by means of high-current bifilar rf chokes, RFC1 and RFC2. These are a central feature of the bottom view, Fig. 7-29. The input impedance is low, so the input circuit, L1,C1, tunes broadly, and the 50-ohm line from the exciter is tapped well up on L1. The plate circuit is merely a coil of copper tubing, L2, inductively tuned by means of a "shorted turn" of copper strip, rotated inside its cold end. See Fig. 7-28. Tuning is smooth and the rotating loop avoids many problems commonly encountered in tuning high-powered amplifiers by conventional methods. Plate voltage is shunt fed to the tube, to prevent the high dc voltage from accidentally appearing on the output coupling loop or on the antenna line.

Most of the lower part of the schematic diagram has to do with control and metering, and is largely self-explanatory. The exciter voice-control relay shorts out R1, allowing grid current to flow, and making the amplifier operative, if the filament and primary-control switches, S1 and S2, have been closed. Feeding ac voltage to the plate-supply relay through J4, J5 and P1 makes application of plate voltage without the filament and blower being on impossible.

Construction

The amplifier chassis is aluminum, 10 X 12 X 3 inches in size, with the tube socket centered 3 1/8 inches from the front edge. The sheet-aluminum panel is 10 inches high. The decorative edging is "cove molding," used by cabinet makers for counter tops. Sides and back are also sheet aluminum. Where they need not be removable, parts are fastened together by pop-riveting. Tools and rivets for this work can be found in most hardware stores. Perforated aluminum (cane metal) is used for the top, and for covering the panel viewing hole.

Stretch the wire for the bifilar rf chokes, before winding. Then, with the wires side by side, under tension, wind them on a form of wood or metal. This is left in until the choke ends are soldered in position. Then remove the form and coat the windings with coil cement, to help maintain turn alignment.

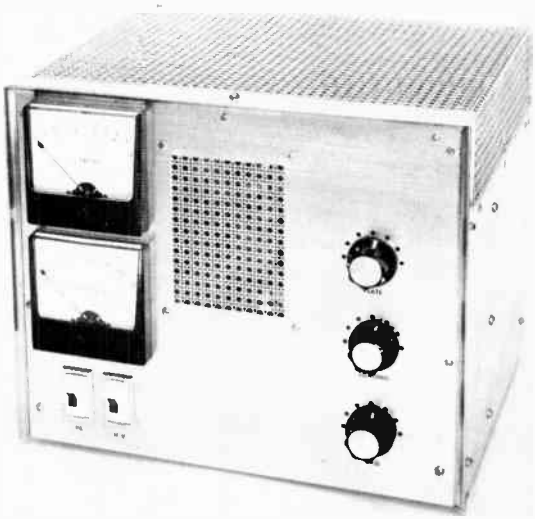

Fig. 7-27 — Table-top 50-MHz amplifier of grounded-grid design, only 10 X 12 inches in size. Grid and plate current are monitored simultaneously. Knobs at the right are for input tuning, bottom, amplifier loading, center, and plate tuning, top.

Connections to the grid terminals (on opposite sides of the socket) are made with short 1/4-inch copper straps soldered to the pins and bolted to the chassis with No. 6 screws, nuts and lock-washers. Be sure that a clean, tight rf ground results.

In Fig. 7-28 it will be seen that the hot end of L2 is supported on the top of the two blocking capacitors, C3 and C4, which in turn, are mounted on the Teflon rod that serves as the form for RFC3. The ground end of L2 is supported on a vertical post made of 3/8-inch copper tubing, 1 3/8 inches high. The end of the coil can be fitted with a heavy copper lug, or pounded flat. A hole is drilled in the flat portion and a 2-inch brass bolt runs through it and the post and chassis. Be sure that there is a permanent solid rf ground at this point.

The shunt-feed rf choke is effectively across the tuned circuit, so it must be a good one. Hand-winding as described below is strongly recommended, as no ready-made choke is likely to be as good. Teflon is slippery, so a light thread cut in the form will help keep the winding in place. If this cannot be done, prepare and wind two wires, as for the filament chokes. Feed the wire ends through one hole in the form, and wind a bifilar coil. Pull the other ends through the finish hole, bending one

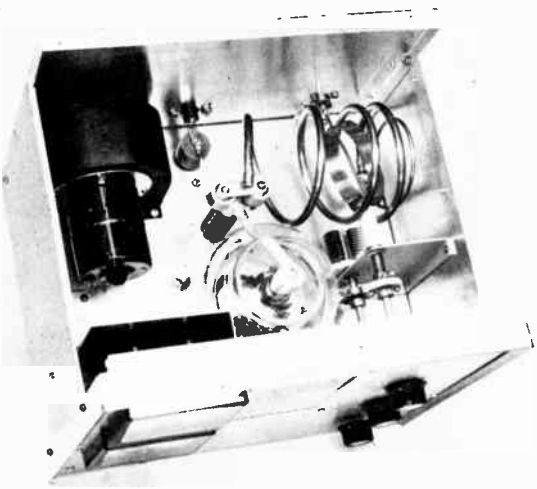

Fig. 7-28 — Interior view of the 50-MHz amplifier shows the shorted-turn tuning system, plate coil and output coupling, upper right. The tuning and loading controls are mounted on a bracket to the right of the 3-500Z tube and chimney. Meter shielding is partially visible in the left front corner.

back tightly at the hole edge. Remove the other winding, which should leave a tight evenly-spaced coil that makes an excellent vhf choke.

The blocking capacitors, C3 and C4, are mounted between brass plates, one of which is fastened to the top of the rf choke form with a sheet-metal screw. The other plate is connected to the hot end of L2 by means of a wrap-around clip of flashing copper. The lead to the tube plate cap is made with braid removed from a scrap of coax. A strip of flashing copper about 1/4 inch wide is also good for this. Use a good heat-dissipating connector such as the Eimac HR6.

The shorted-turn tuning ring is centered between the first two turns of L2. The ring is attached to a ceramic pillar, and that to a 1/4-inch shaft, the end of which is tapped for 8-32 thread. This shaft runs through a bearing mounted in a bracket 4 inches high and 2 3/4 inches wide, fastened to the chassis and the side of the enclosure. The output loading capacitor, C6, is also mounted on this bracket. It is one inch above the chassis, and the tuning-ring shaft is 3 1/4 inches above the chassis. The input tuning capacitor, C1, is mounted under the chassis, with equal spacing between the three, for symmetrical appearance.

The output coupling loop, L3, is just inside the cold end of L2. It can be adjusted for optimum coupling by "leaning" it slightly into or out of L2. Be sure that it clears the shorted turn throughout movement of the latter.

The coaxial output jack, J3, is on the rear wall of the enclosure. A small bracket of aluminum grounds it to the chassis, independent of the bonding between the chassis and the enclosure. Plate voltage enters through a Millen 37001 high-voltage connector, J2, on the rear wall, and is bypassed immediately inside the compartment with a TV "doorknob" high-voltage capacitor, C5.

The blower assembly in the left rear corner of the chassis draws air in through a hole in the back of the compartment, and forces it down into the enclosed chassis. The only air path is then back up through the socket and chimney (Eimac parts SK-410 and SK-406 recommended) and out through the top of the enclosure. The data sheet for the 3-500Z specifies an air flow of at least 13 cubic feet per minute, when the tube is operated at 500 watts plate dissipation. The ac leads for the blower motor come into the enclosure on feed-through capacitors.

The meters are enclosed in a shield fastened to the front and side panels. Meter terminals are bypassed for rf inside the shield, and leads come through the chassis on feedthrough capacitors. The rocker-type switches just below the meters have built-in illumination. The high-voltage switch is not meant to control the plate supply directly, but rather through a relay, as in the 3000-volt supply shown in Chapter 5. The plate meter is in the negative lead, so be sure that your supply is compatible with this arrangement. Do not use this system where a potential difference exists between the amplifier and power supply chassis. All power leads are made with shielded wire (Belden 8862) and all exposed points are bypassed to ground.

Adjustment and Use

Do not apply drive to the 3-500Z without the plate voltage being on. Also, it is recommended that initial testing be done with low drive, and with a plate voltage of 1500 or less. With a 50-ohm load

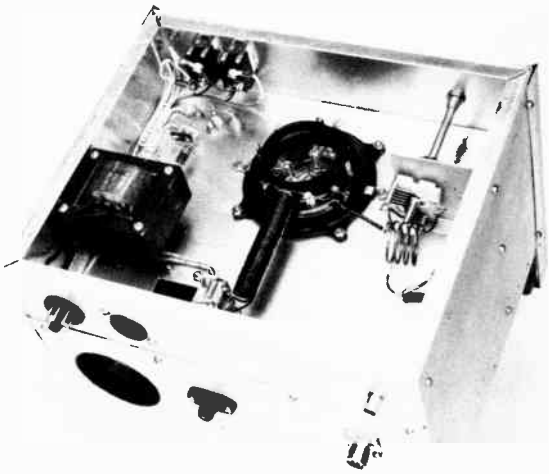

Fig. 7-29 — With the bottom cover removed, a look into the chassis from the rear shows the input circuit, L1,C1, right, the bifilar filament chokes, foreground, filament transformer and control switches. Opening in the rear wall is for air intake.

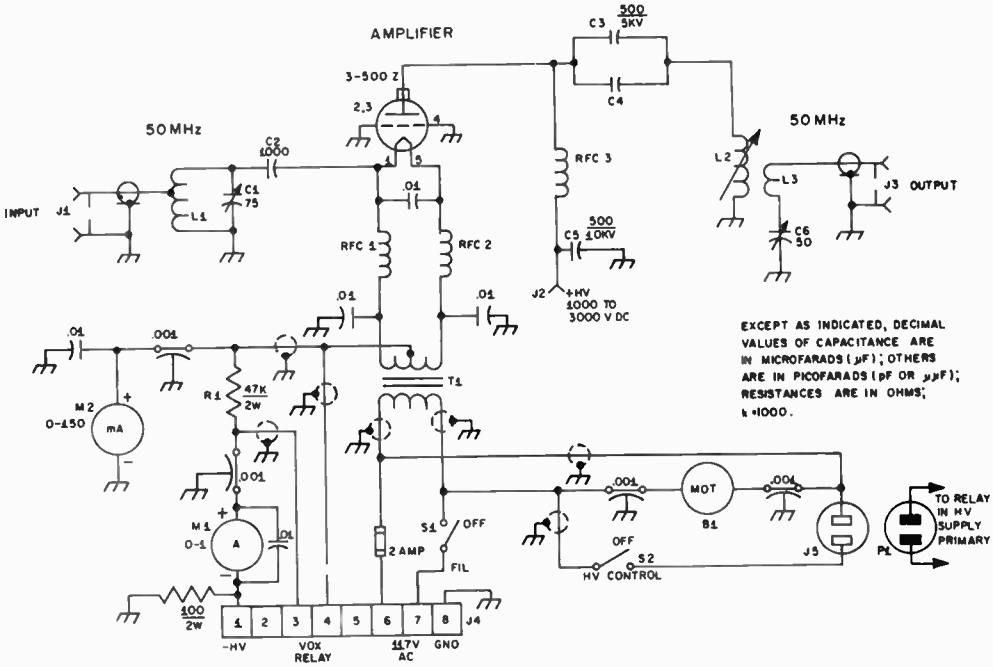

Fig. 7-30 — Schematic diagram and parts information for the 50-MHz grounded-grid amplifier.

B1 — Blower, 15 ft^3/min or more.
C1 — 75-pF variable (Johnson 167-4).
C2 — 1000-pF dipped mica.
C3, C4 — 500-pF 5-kV transmitting ceramic (Centralab 858S-500).
C5 — 500-pF, 10-kV or more, TV "Doorknob."
C6 — 50-pF variable (Johnson 167-3).
J1 — BNC coaxial receptacle.
J2 — High-voltage connector (Millen 37001).
J3 — Type N coaxial receptacle.
J4 — 8-pin male power connector, chassis-mounting.
J5 — AC receptacle, chassis-mounting.
L1 — 4 turns No. 12 enam, 1 inch long, 1inch dia. Tap 2 1/2 turns from ground end.
L2 — 3 1/2 turns 1/4-inch copper tubing, 3 1/2-inch dia, 5 1/4 inches long. Diameter is finished dimension, not that of form used for winding. See text and photo for turn spacing. Tuning ring is closed loop of 1/2-inch copper strip, 2 5/8-inch dia.
L3 — 1 turn, 3-inch dia, and leads, made from one piece of 1/8-inch copper tubing or No. 8 wire.
M1 — DC meter, 0-1 ampere (Simpson Wide-Vue, Model 1327).
M2 — 0-300 mA, like M1.
P1 — AC plug, on cable to power supply.
R1 — 47,000-ohm 2-watt resistor.
RFC1, RFC2 — 21 turns each, No. 12 enam, 1/2-inch dia, bifilar.
RFC3 — 30 turns No. 20 enam, spaced wire dia, on 3/4-inch Teflon rod, 3 3/4 inches long. Drill end holes 1/2 and 2 3/4 inches from top.
S1, S2 — Spst, rocker-type, neon-lighted (Carling LT1L, with snap-in bracket).
T1 — Filament transformer, 5 V, 15 A (Stancor P6433; check any electrical equivalent for fit under 3-inch chassis).

connected to J3, apply 1000 to 1500 volts through J2, and turn on the driver. Adjust the tuning ring inside L2 for a dip in plate current. Tune C1 for maximum grid current. Tune C6 and adjust the position of L3 with respect to L2 for maximum output. If the amplifier seems to be running properly, connect an SWR bridge between the driver and J1, and check reflected power. It should be close to zero. If otherwise, adjust the tap position on L1.

Tuning range of the plate circuit can be checked with a grid-dip meter, with the power off the amplifier. The range is affected by turn spacing overall, and at the cold end. The closer the first two turns are together the greater the effect of the tuning ring. No other tuning device is used, so some experimentation with diameter and length of L2 may be needed if you want other than the 49.8 to 52.7 MHz obtained with the graduated turn spacing visible in the interior view. The highest frequency is reached with the ring in a vertical plane. Dimensions that affect tuning range are as follows: Grounded support for L2 – 1 1/8 inches from right side of chassis, and 3 1/4 inches from rear. RFC3 mounting position – 4 inches from rear and 5 1/2 inches from left. Shorted turn approximately centered between turns 1 and 2 of L2. The start of L3 bends from the stator of C6 to near the start of L2. The end toward J2 passes between the first two turns of L2, clearing the tuning ring in any position of the latter.

Once the amplifier seems to work normally at

moderate plate voltages, apply higher, up to the maximum of 3000. Plate current, with no drive, should be about 160 mA. It can be lowered by inserting 0.1 to 0.4 ohm in series with R1 and the filament center-tap. A Zener diode, 2 to 9 volts, 10 watts, could do this job, as well.

Keep the amplifier tuned for maximum output. Do not decouple to reduce output; cut down drive and/or plate voltage instead. Adjustment for linear operation requires a scope. Maximum output, minimum plate current and maximum grid current should all occur at the same setting of the plate tuning. If they do not, the output loading is over coupled, or there is regeneration in the amplifier. The plate-current dip at resonance is noticeable and smooth, but not of great magnitude.

Typical operating conditions given by the manufacturer, and in the tube-data section of the *Handbook*, are guides to good practice. The amplifier works well with as little as 1000 volts on the tube plate, so varying the ac voltage to the plate-supply transformer is a convenient way to control power level. It is seldom necessary to run the maximum legal power in vhf communication, so some provision for this voltage control is recommended. With just one high-voltage supply needed and no critical tuning adjustments, power variations from 100 to 600 watts output are quickly and easily made. This amplifier was built by Tom McMullen, W1SL, and first described in *QST* for November, 1970.

KILOWATT AMPLIFIER FOR 144 MHZ

The vast difference in design problems for the two bands is highlighted in the nature of the 50- and 144-MHz amplifiers described herewith. They could hardly be more dissimilar, yet each is a logical way to increase power. The 50-MHz amplifier is a grounded-grid device, but a push-pull amplifier of the grounded-cathode type is preferred for 144-MHz service. External-anode tetrodes for this application include the 4X150A, 4X250B, 4CX250B and R, and others having the same basing. The 8122, 4CX300A, 4CX250K and others have various basing arrangements. Except for heater voltage and base design these types are much alike. Early glass-insulated tubes of the 150-250 series (no C in the prefix) may have to run at slightly lower maximum input than their ceramic-insulated (CX) replacements.

Our 144-MHz amplifier, Fig. 7-31, can be run in Class AB_1, for a-m or ssb linear service; or Class C, for high-efficiency a-m, cw or fm. Driver power output should be 2 or 3 watts for AB_1, and 10 watts or more for Class C. For more on operating conditions, see information on linear amplifiers earlier in this chapter, the tube manufacturer's data sheets, or the tube data section of this *Handbook*.

Fig. 7-31 — The 144-MHz amplifier is built in conventional rack-and-panel style, with the entire top of cane metal, to provide free air flow. Controls are grid-circuit tuning, C2, lower left; output loading capacitor, C5, center; and plate-circuit tuning, C4, with vernier dial, right. The slotted end of the Teflon shaft on C1 is visible as a white spot just below the loading control.

Construction

The principal difference between this amplifier and its many predecessors using similar tubes lies in the plate-circuit design. The inductor is cut from flat sheet brass, in the form of a U. The circuit is tuned by a simple handmade variable capacitor that avoids problems commonly encountered in this part of a high-powered vhf amplifier. The circuit is practically identical to several previously described in *QST*, the *VHF Manual* and recent editions of this *Handbook*.

The amplifier is built on a 17 X 8 X 3-inch aluminum chassis, fitted with a bottom cover which completes the shielding and directs the flow of cooling air. The top portion of the enclosure is of similar size, except that it is 3 3/4 inches high, and it has a cane-metal top. It was made by bending up the necessary sheet aluminum, but angle stock and flat sheets could be used equally well. Angle stock along the back of the front panel completes the enclosure. The gray-wrinkle aluminum panel is 7 inches high.

The tube sockets are mounted 2 inches in from the right side, as seen in the photographs, and 2 5/8 inches apart, center to center. The Eimac SK620A sockets, with their integral screen-ring shielding, are recommended. Other sockets may require slightly greater spacing, and some modification of the plate-circuit dimensions. The raised screen-ring shield is also a great aid in neutralizing the amplifier. Some form of shield should be added if early flat sockets are used. This need is particularly acute if the amplifier is to be operated in the Class AB_1 mode, which is characterized by very-high-power sensitivity.

The half-wave-line grid circuit, L2, is tuned at the end away from the tubes by the split-stator variable, C2, and balanced to ground by means of C3, a differential capacitor. This is supported on its stator tabs, which are soldered directly to L2, immediately adjacent to C2. A strap of 1/4-inch copper connects the rotor of C3 to the chassis, in the shortest practical manner. The slotted shaft of C3 is reached through a hole in the bottom cover of the chassis. This hole is sealed with black plastic tape after the adjustment is completed, in order to avoid air leakage.

Leads to the neutralizing tabs, C9 and C10, are tapped on the grid lines at a point 1 3/4 inches from the grid end. Feedthrough bushings (not visible in the photographs) are under the lines. The crossover is made by copper strips from the lines to the bushings. Variable capacitance to the plate line is provided by copper tabs 1/4 X 5/8 inch in size, soldered to the top ends of the bushings, just below the plate line, L3. Adjusting their position with respect to L3 provides the required neutralizing capacitance.

Connections to the grid ends of L2 are wrap-around copper clips slipped over the tubing ends and fastened to the grid posts of the tube sockets with screws. They are soldered to the line ends, for permanence. The connections to C2 are made in somewhat the same way, except that the tabs are soldered to the stator lugs. Note that the rotor of C2 is not grounded. It is supported on ceramic standoffs 5/8 inch high.

The grid-circuit isolating resistors, R1 and R2, are connected to L2 by means of spring clips which are slid over the line before assembly. These can be tube grid clips, if available. They are moved along the line to the point of minimum rf voltage, using the familiar lead-pencil test.

The shaft of C2 is rotated through an insulating shaft, fitted with an insulating flexible coupling, to minimize any tendency to unbalance the grid circuit. The shaft from C1 is also insulating material, and it has a flexible coupling. The capacitor is not adjusted often, so the shaft end is slotted, and is allowed to protrude through the front panel. It is just visible in the front view, below the output-loading control.

All power leads are made with shielded wire, bonded together by frequent spot-soldering, and to the chassis by means of grounding lugs. Exposed terminals are bypassed wherever necessary, to prevent rf pickup.

Each cathode pin on the socket is grounded through a separate lug, and nothing else uses these lugs for a ground path. Minimum cathode-lead inductance is important. Even the shortest lead shared with another circuit can cause unwanted coupling in a vhf amplifier.

The plate inductor, L3, is made of sheet brass, in the form of a U. Principal dimensions are given in Fig. 7-35. The stator plates of the tuning capacitor, C4, part A, are soldered to the plate line with their right edges 5/8 inch from the tube anodes. Connection to the latter is made with two brass tabs, part B, at the tube ends of the line. These were omitted from the drawing of the assembly in the interest of clarity, but their position is clearly visible in the photographs. These tabs are curved slightly after bending, to provide more contact surface to the anode. Clamping rings made of flashing copper wrap around the anode structure and hold the tabs tightly to it. This is a point of low rf current, so a large contact area is not vital.

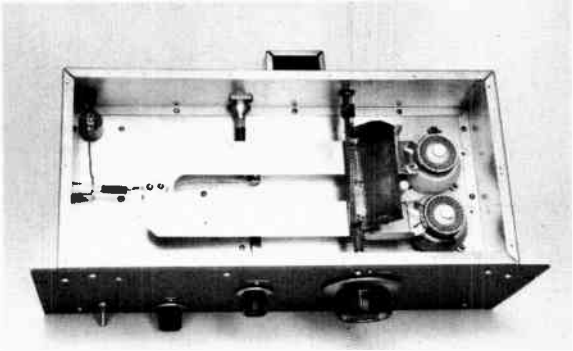

Fig. 7-32 — Interior of the 2-meter amplifier, showing the brass plate-inductor and vane-tuning system. Note the position of RFC1, at the far left, out of the main rf field. The output coupling loop, L4, just below the plate line and barely visible here, is connected to the output jack, J4, on the rear wall with a short section of coax, and to the loading capacitor, C5, on the front panel by means of copper strip.

The plate line was made flat originally, but when the amplifier was tested it was found that this did not allow room to adjust the output coupling loop, L4, to the optimum position. The half-inch offset shown in Fig. 7-35 (but not in the photographs) netted a marked improvment in efficiency. The entire plate circuit was silver-plated after the photography. Careful checks on performance indicated no difference, before and after plating. Plating may be desirable on a long-term basis, as silver oxide is a good conductor, and other oxides are not.

The "stators" and the tabs for the anode connection were silver-soldered to L3. Ordinary soldering will be adequate, but it might be well to use screws to hold the tabs onto L3, as a precautionary measure. The stator plates have flat-head screws running through them and L3, into the insulating supports for the latter. These are 1-inch ceramic pillars. The closed end of the loop is supported on a 1 1/2-inch pillar.

The holes for these supports can be made slightly oval, to position the assembly so that no strain on tubes or sockets is caused when the anode rings are tightened. The mounting hole in the closed end of L3 is also elongated. The screw that holds the line on its support has Teflon washers above and below L3, to permit the line to move on its support, if expansion and contraction with heating and cooling of the line should be appreciable.

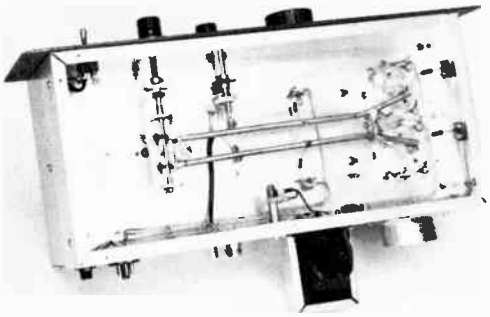

Fig. 7-33 — The principal feature of the bottom view is the half-wave grid circuit. Its split-stator capacitor, C2, is at the left end of the line, L2. The differential balancing capacitor, C3, is also across the line, just to the right of C2. Isolating resistors in the grid circuit, R1, and R2, are near the middle of the picture. The screen isolating resistors, R3 and R4, run to tie points on the right wall of the chassis.

The rotor of C4 is in the form of a shallow box made of flashing copper. It is shown in flat form in Fig. 7-36, along with other copper parts of the plate circuit. Its ends, 1 inch high, provide the variable capacitance to the stator plates on L3. After the box is bent to the desired form, its adjoining surfaces are soldered for additional strength and rigidity. The edge away from the tube anodes is supported on a fiber glass rod with 4-40 screws, the rod surface having been filed flat in this area previously. Reducing couplers at each end of the rod permit use of a 1/4-inch shaft bearing at the rear, and a National Velvet-Vernier dial mechanism at the front. Do not use heat-sensitive rod such as Lucite or Plexiglas. Nylon and some types of Bakelite are unstable in strong rf fields, and are also unsatisfactory. Teflon is probably good, but the fiber glass rod is stronger and easy to work. It is 6 3/8 inches long, and may be 1/2 or 3/8 inch in diameter.

Mechanical stops for the rotor are provided at both ends of its normal travel. A 3/8-inch Teflon rod 1 3/8 inches high, fastened to the chassis between the neutralizing feedthrough bushings, stops the rotor in the horizontal position. The rotor is prevented from "going through the roof" by a 1-inch setscrew in the vernier-drive hub, and a longer-than-normal screw for the lower left mounting screw for the driver assembly.

The rotor in its horizontal position is approximately 1/4 inch above L3, and the spacing at the end of the rotor is also 1/4 inch. The tubes are fitted with Eimac SK626 chimneys. The under surface of L3 should just clear these. If it does not, raise it by putting washers on the screws that run into the 1-inch pillars.

The output loop, L4, is supported under L3 by two 1/2-inch ceramic insulators. If the threaded holes go the whole length, be sure that the mounting screws do not ground the loop, or come close enough to allow arcing to ground. Connection to the coaxial output jack, J2, is made with a short piece of RG-8/U coax, using a shielding cone at the J2 end. The coax shield is grounded to chassis with a copper strap at the L4 end also, to make the rf path to ground independent of the chassis bonding. The rotor of C5 is also grounded independently. A copper strap connects the stator of C5 to the end of L4. After the final form and size of L4 have been determined, the connection to the strap should be soldered, to maintain a good rf bond. These circuits carry high rf currents, and permanent low resistance connections are important. The performance of many amplifiers falls off with aging, because factors like this were overlooked.

An adequate supply of cooling air must be provided. The manufacturer stipulates 4.6 cubic feet per minute, per tube, minimum, but much more should be available. The blower used here has a 3-inch diameter wheel, turning at 3300 rpm. It is connected to the rear of the chassis by way of an automotive defroster hose 2 1/8 inches in diameter.

Adjustment

Heater voltage (at the socket) should be 6.0 volts. This is adjusted by means of the slider on R5. Set the sliding clips on L2 at the approximate midpoint. Now apply 1 to 2 watts drive to the grid circuit, adjusting the position of L1 and the tuning of C1 and C2 for minimum reflected power, indicated on an SWR bridge connected between the exciter and J1.

With enough drive so that grid current will be measurable, meter each grid separately, and adjust the balancing capacitor, C3, for as near to the same value for each grid as possible. Readjust C2 for each change. When the currents are approximately equal, the neutralization should be adjusted. With a 50-ohm load connected to J2, and with the screen and plate circuits having some dc path to ground, such as through power supply bleeders, couple a sensitive rf indicator to L3. Still with no plate or screen voltage applied, tune C2 and C4 for maximum indication, then adjust the positions of the neutralizing tabs, C9 and C10, carefully for *minimum* rf feedthrough. Recheck the grid circuit balance and tuning each time a tab setting is changed.

The points of connection of the resistors R1 and R2 on the lines comprising L2 are not critical, unless the exciter is low on output, but they should be near the points of lowest rf voltage on the line. Check by running a pencil lead along the line and watching the current. The point at which there is no change in the meter indication is where the clip should be. Recheck all adjustments.

The approximate tuning range of the plate circuit can be checked with a grid-dip meter, with no power on the amplifier. It should tune more than the width of the 2-meter band. Now, with an output indicator and a good 50-ohm load connected to J2, the amplifier is ready for power.

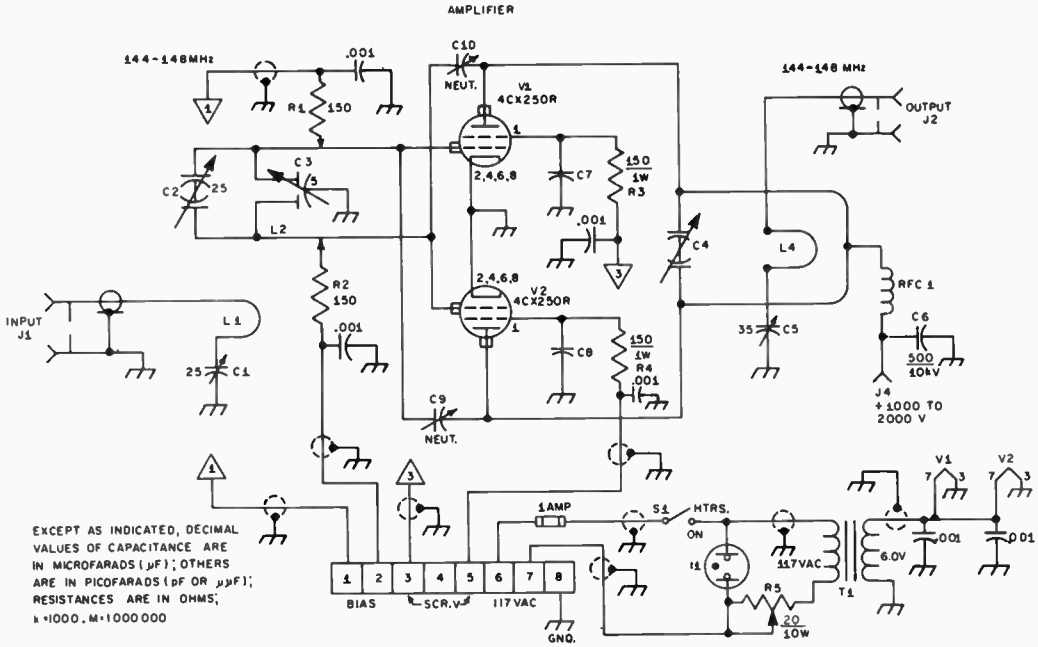

Fig. 7-34 — Schematic diagram and parts information for the 144-MHz amplifier. Capacitors not described are disk ceramic.

C1 — 25-pF miniature variable (Hammarlund MAPC-25B).
C2 — 25-pF per section split-stator (Hammarlund HFD-25).
C3 — 1.5- to 5-pF differential (Hammarlund MAC-5-5).
C4 — Vane-type tuning capacitor; see text and photos.
C5 — 35-pF variable (Hammarlund HF-35).
C6 — 500-pF 10-kV TV "doorknob."
C7, C8 — Screen bypass; part of Eimac SK-620A socket.
C9, C10 — Neutralizing tabs 1/4 X 5/8-inch sheet copper, soldered to top of National FTB bushing.
I1 — 117-volt neon pilot lamp.
J1 — BNC coaxial jack.
J2 — Type N coaxial jack.
J3 — 8-pin power connector, male.
J4 — High voltage power connector (Millen 37501).
L1 — Copper strip 1/4 X 4 inches. See Fig. 7-36.
L2 — 1/4-inch copper tubing 10 1/2 inches long, 15/16 inch center to center. Bend to Y shape 2 inches from tube end.
L3 — .065-inch sheet brass; see text and Fig. 7-35.
L4 — Copper strip 15/16 X 7 1/2 inches, bent to roughly elliptical shape. See text and Fig. 7-36.
R1, R2 — 150-ohm composition, 1/2 watt.
R3, R4 — 150-ohm composition, 1 watt.
R5 — 20-ohm 10-watt, slider type.
RFC1 — 32 turns No. 24 enamel, closewound on 1/4-inch Teflon rod. See mounting position in interior photo.
S1 — Spst toggle switch.
T1 — 6.3-V 6-A filament transformer (Merit P-2947).

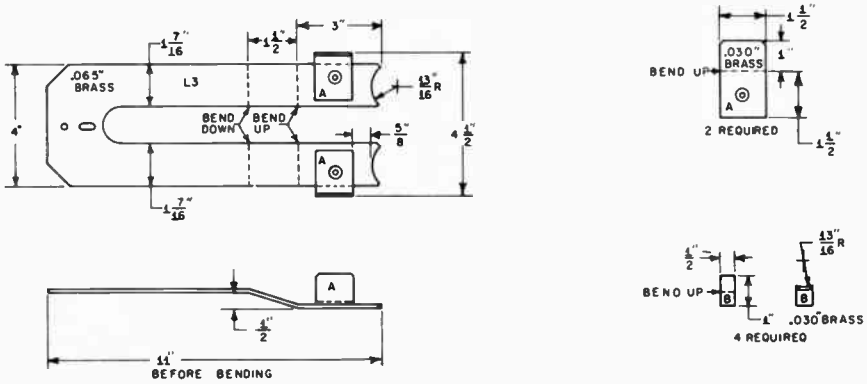

Fig. 7-35 — Principal dimensions of the brass parts of the amplifier plate circuit. The U-shaped inductor is shown in both top and side views, with the stator plates of C4 in place. These plates (A) are shown before bending, at the upper right. The small brackets (B) make contact with the tube anodes. Slight curvature, to fit tube anode, can be imparted by tapping with a small hammer, against a 1 1/2-inch pipe or rod, used as an anvil.

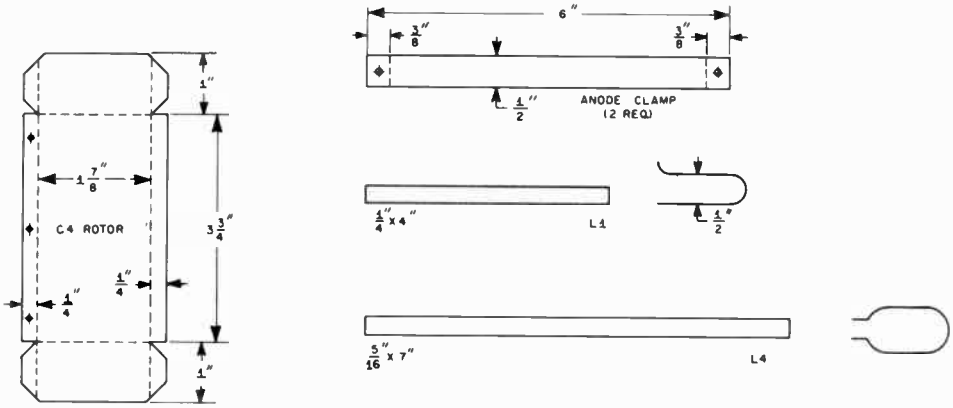

Fig. 7-36 — Flashing-copper parts used in the 2-meter amplifier. Broken lines indicate 90-degree bending required. The surfaces of the C4 rotor are soldered together after bending, for rigidity. The anode clamps, upper right, wrap around the tube cooling ring, and hold the brass tabs (Fig. 7-35) firmly in place. L1 and L4 are shown in the approximate shape, after bending, at the right.

For initial tests, the plate voltage should be 800 to 1000 volts. Screen voltage should be no more than 250, preferably regulated. There will be little difference in tuning or output with the cover on or off, so, with due regard for safety, leave it off, at first. Never reach inside the plate compartment when high voltage is applied. To be sure that it is off, short the plate inductor to ground with an insulated screwdriver or other safe shorting device. Do this every time before touching anything inside the compartment in any other way. Play it *safe*!

Apply plate and screen voltage, in that order. Adjust bias so that the plate current is about 150 mA. Apply drive, and tune C4 and C5 for maximum power output. With enough drive for about 5 mA grid current per tube, the plate efficiency should approach 70 percent, after the position of L4 with respect to L3 is adjusted with some care. Loop position and all tuning adjustments change with plate voltage and drive level, so in linear service all adjustments should be made under the conditions for which you want best linearity.

The shape and position of L4 are quite critical. Best efficiency was obtained with the loop roughly elliptical in shape, and about 3 inches below L3. Best results show at plate voltages between 1200 and 1800. The tube maker's typical operating conditions are the best guide to efficient operation, but they are only *typical*. If safe levels of grid, screen and plate dissipation are not exceeded, many variations are possible. See "Tips on Linears" earlier in this chapter.

This amplifier was built by W1SL, and described in February, 1971, *QST*.

References

The 50- and 144-MHz amplifiers described incorporate features from many previous *QST*, *Handbook* and *VHF Manual* projects.

Maer, "Perseids Powerhouse," *QST*, Oct., 1959 (dual-band amplifier for 50 and 144 MHz).

"High-Efficiency 2-Meter Kilowatt," *QST*, Feb., 1960 (PP 4CX300As).

Breyfogle, "Top Efficiency at 144 Mc. with 4X250Bs," *QST*, Dec., 1961.

"Kilowatt Amplifiers for 50 and 144 Mc.," *QST*, Feb., 1964. Basic information also in the *VHF Manual*, all editions, and in this *Handbook*, 1966 through 1970. Metering and control information applies to the 144-MHz amplifier described here.

A RESONANT-CAVITY AMPLIFIER FOR 432 MHZ

This highly-efficient 4CX250 amplifier operates at approximately 63-percent efficiency when used with a plate supply of 1750 volts and a screen supply of 255 volts. It can be operated with higher voltage on its plate, but at reduced efficiency. It provides power levels up to 500 watts input on cw and fm.

The grid circuit of the amplifier is as shown in Fig. 7-39 and is pretty much a duplication of the one shown in the 2nd Edition of *The Radio Amateur's VHF Manual* (ARRL), page 257. The plate side of the circuit is a resonant cavity and is shown in representative form in Fig. 7-39. Detailed information on how the plate circuit is built is given in Fig. 7-40.

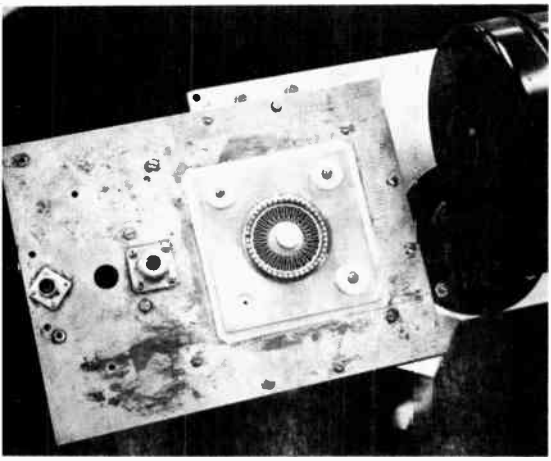

Fig. 7-37 — View of the top of the assembled amplifier. Teflon bushings hold the square capacitor plate in place on the wall of the cavity. One bushing is not shown. The high voltage and rf choke connect to that bushing's screw when it is in place. Plate-tuning adjustments are made from the bottom of the cavity. The shaft for C3 is accessible on the bottom wall of the cavity. This amplifier was designed and built by H. E. Holshouser, Jr., K4QIF.

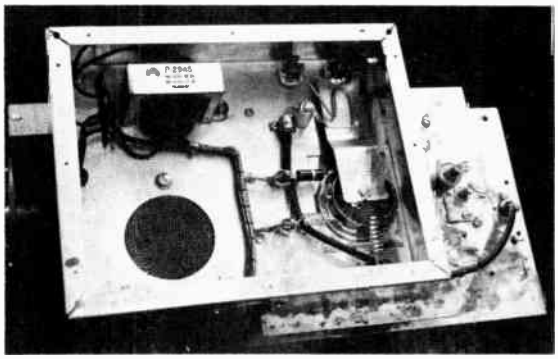

Fig. 7-38 — Inside view of the amplifier. The grid circuit and filament transformer are inside the chassis. Plate and output-tuning adjustments are made from the bottom of the cavity (far right).

Construction

Much of the information concerning the way the amplifier is built can be taken from the photos. The dimensions of the plate cavity are given in Fig. 7-40. The cavity is constructed cylindrical fashion, from 1/8-inch thick copper or brass stock and has an inside diameter of 6 1/4-inches. The wall height of the cylinder is 1 1/2 inches. Both end plates are fashioned from 1/8-inch thick copper or brass stock. A firm bond is essential between the end plates and the cylinder to assure maximum efficiency. It would be wise to have the cylinder milled flat on each end to assure a good fit, then use a liberal number of machine screws to hold the end plates in place. Mechanical rigidity is imperative with this type of structure, thus assuring good continuity at the high-current points of the cavity, and to enhance the tuning stability of the plate circuit.

The tube and socket are mounted 5/8 inch off center from the center of the cavity. The hole in the top plate of the cavity should be large enough in diameter to assure a 3/16-inch clearance all around the anode of the tube. Care should be taken to smooth the edges of the hole lest arcing occur during operation. The home-built capacitor, C6, is formed by making a 3 7/8-inch square copper or brass plate of 1/8-inch thick stock and placing a sheet of 10-mil teflon insulation between it and the cavity top plate. The plate has a clearance hole for the anode of the 4CX250 and is ringed with finger stock so that it contacts the tube's anode. Insulating bushings of teflon are used at each corner of the capacitor plate to secure it to the wall of the cavity, Fig. 7-37.

An Eimac SK-600 tube socket is used, and no chimney is needed. The socket has built-in bypass capacitors on the screen and filament terminals. These are not shown on the schematic diagram. The bottom of the tube socket projects into the main chassis where the grid circuit is located. The output link, L3, is a straight piece of 1/16-inch

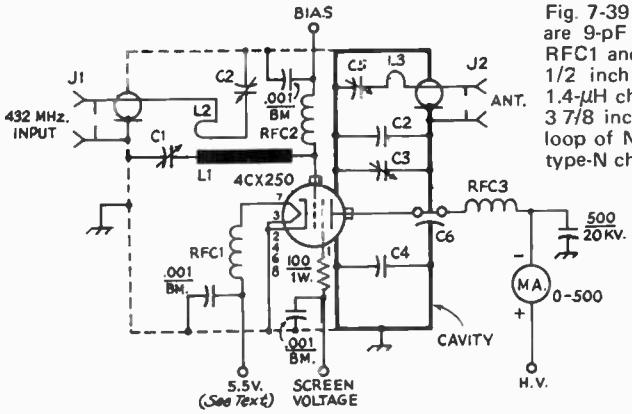

Fig. 7-39 — Schematic of the amplifier. C1 and C2 are 9-pF miniature variables (Johnson 160-104). RFC1 and RFC2 are each 8 turns of No. 16, enam, 1/2 inch diameter and 1 inch long. RFC3 is a 1.4-μH choke. L1 is a brass strip, 1/16 inch thick, 3 7/8 inches long, and 1 1/4 inches wide. L2 is a loop of No. 12 wire, 6 inches overall. J1 and J2 are type-N chassis connectors. B.M. = button mica.

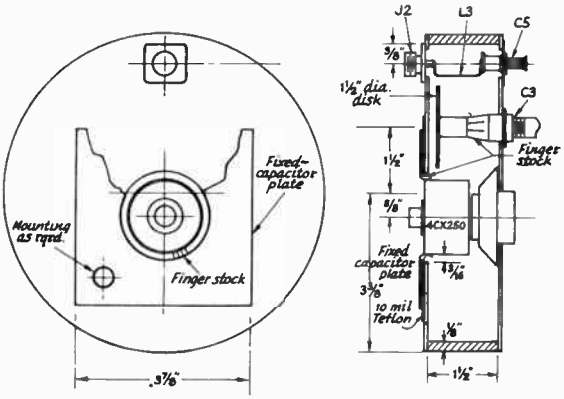

Fig. 7-40 — Mechanical layout of the plate cavity and its dimensions.

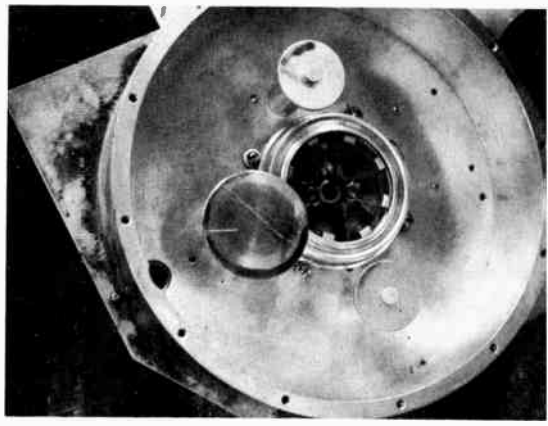

Fig. 7-41 — Inside view of the K4QIF amplifier cavity. The stationary capacitors, C2 and C4, are located on either side of the 4CX250 socket.

thick brass or copper, 1/8 inch wide, shaped as shown in Fig. 7-40.

Two fixed capacitors are shown in the schematic diagram, C2 and C4. These capacitors are not indicated on the mechanical drawing of Fig. 7-40 as they were added as a modification when some models of this amplifier showed a tendency toward arcing between the disk of C3 and the cavity wall. C2 and C4 are disks of copper which are 1 1/4 inches in diameter. They are spaced approximately 1/8 inch from the top wall of the cavity. They are supported from the bottom wall of the cavity by means of 3/8-inch diameter brass posts and are positioned generally as shown in Fig. 7-41. *A word of caution:* The tuning shaft of C3 should not pass through the grid compartment of the amplifier. The cavity assembly is offset on the main chassis so that the shaft is accessible outside the grid compartment.

The output tuning capacitor, C5, is a glass piston trimmer with a maximum capacitance of 10 pF. Do not try to use a plastic piston trimmer here as it will be destroyed because of its poor dielectric properties. Neutralization of this amplifier was not found to be necessary as no tendency toward instability was noted.

Operation

It is suggested that a 0.5-ampere fuse be used in series with the high-voltage lead to protect the plate meter should an arc or short circuit occur. The screen current should be metered so that at no time an excessive amount of current will be permitted to flow. Heed the manufacturer's ratings at all times.

The amplifier must always look into a nonreactive load if damage is not to occur. It is designed to work into a 50-ohm load, but a 75-ohm load will be acceptable if the SWR is kept low. *Warning:* The anode of the 4CX250 should be covered with a perforated box of some type to prevent accidental contact with the high voltage. It should allow the free passage of air from the forced-air cooling system, which is piped into the grid compartment. The grid compartment should be made as air-tight as possible to assure a heavy flow of air through the socket and the anode fins of the tube.

The heater voltage for this type of tube is 6.0 and not 6.3. It is satisfactory to use the 6-volt figure at the low frequencies, but at 432-MHz, the voltage should be reduced to 5.5 to compensate for the back-bombardment that the cathode is subjected to. The latter causes overheating, which in turn causes drifting of operating conditions and shortened tube life. Other operating voltages and currents for this amplifier must be chosen for the class of operation desired. It is best to consult the manufacturer's published ratings for this information.

GROUNDED-GRID AMPLIFIER FOR 1296 MHZ

There are few tubes available that will provide the radio amateur with low-cost construction while at the same time delivering moderate power output in the 1215-MHz region. One popular low-cost tube is the 2C39. Also available are its newer brothers the 2C39A, 2C39B, 3CX100A5, and 7289. All look pretty much alike, but only the early versions have appeared on the surplus market. This amplifier uses 2C39As in a cavity assembly and is capable of delivering 100 watts or more as a linear amplifier, with a gain of 6 to 10 decibels.[1] It can be built with simple hand tools.

[1] Described in January 1968 *QST*.

Amplifier Details

Uhf circuits, particularly those involving cavities, do not lend themselves well to conventional schematic presentation, but the circuit diagram, Fig. 7-43, may aid the reader in identifying the components and understanding their functions. The structural features of the amplifier are not all apparent from the photographs, so are described in some detail, using component designations of Fig. 7-45 in referring to the various parts.

This is a grounded-grid amplifier. The large square box visible in the pictures houses the cathode input circuit. The whole assembly is shown from the top in Fig. 7-42, and from the bottom in Fig. 7-44. Details of the principal metal parts are given in Fig. 7-45. It will be seen that the bottom cover of the cathode compartment (part D in Fig. 7-45) is cut diagonally to permit access to the cathode circuit for adjustment purposes. The tuned circuit, L1-C2, is effectively a half-wave line, tuned at the end opposite to the tubes. The inductance, part E in Fig. 7-45, is tuned by means of a beryllium copper spring finger, visible in the lower left corner of Fig. 7-44. It is actuated by an adjustment screw running through a shoulder nut mounted in the removable cover plate. Input coupling is capacitive, through C1, a small glass trimmer at the center of the line, between the tubes. An approximate input match is established by adjustment of this capacitor.

The plate circuit, L2-C3, is a square tuned cavity not visible in the pictures. It is made by bending part G into a square, and soldering it to the top of part C and to the bottom of part B, with all lined up on a common center. The *outside* of the cavity is at rf ground potential. The tubes are mounted on a diagonal, at equal distances from the center. The plate tuning capacitor, C3, is coaxial. Its movable element is a 6-32 screw, running through a shoulder nut in the top plate of the bypass capacitor, C4, soon to be described. The fixed portion is a metal sleeve 5/16 inch inside diameter and 5/8 inch high, soldered to the top side of part C. It is centered on a 6-32 binder-head screw, threaded into the center hole in part C. This screw also holds a 3/8-inch insulating spacer that supports the cathode inductor, part E. Output coupling is by means of a fixed loop, L3, on a BNC or TNC coaxial fitting mounted in the 3/8-inch hole in part G, the cavity wall.

The bypass capacitor, C4, consists of the top cover of the plate cavity, part B, a layer of 0.02-inch Teflon sheet, and the top plate, part A. This combination does not act as a pure capacitance, because of the large size of the plates in terms of wavelength at 1296 MHz. It is important not to make substitutions here, as variations in size of the plates or thickness of the insulation may cause the capacitor to become resonant. The plates are held together with nylon screws. Metal screws with insulating sleeving, and insulating shoulder washers, may also be used. Nylon screws and other insulation, other than Teflon, may melt if the bypass capacitor becomes resonant. Nylon is very lossy at 1296 MHz.

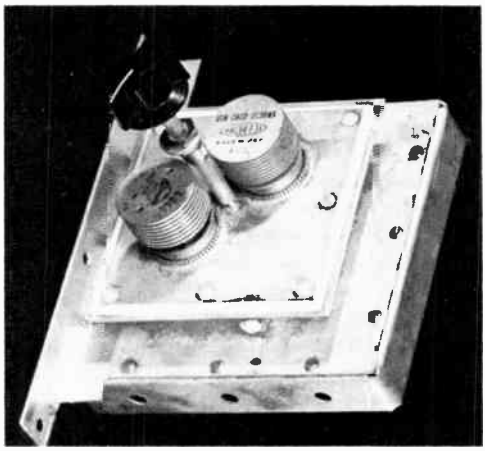

Fig. 7-42 — The 2-tube 1296-MHz amplifier. Two 2C39As are used in this grounded-grid setup. The large square base unit houses the cathode input circuit. The plate cavity is not visible, as it is obscured by the plate-bypass assembly seen here. *(Built by W6IOM)*

Construction

Major sheet-metal parts are cut from 0.04- or 0.05-inch sheet-brass. The cutting, bending and soldering can be done with hand tools. The soldering is done readily over a kitchen stove, or with a 300-watt or larger soldering iron. Silver plating is recommended, to assure good rf contact throughout. Several methods usable in the home are outlined in *The Radio Amateur's VHF Manual.* All sheet-brass parts are shown in Fig. 7-45, with dimensions and hole locations. Note that the bottom plate of the cathode assembly, part D, is cut diagonally, and fitted with spring finger stock to assure good electrical continuity when the assembly is closed.

On the smaller part of D is a 6-32 screw that runs through a shoulder nut soldered into the sheet, with the head of the screw on the outside when the cover is in place. The end of the screw bears on the beryllium copper spring finger, 5/8 inch wide, bent so that its position with respect to the cathode circuit varies with the position of the screw. Its position and approximate size should be evident from Fig. 7-44. The bottom end is soldered to the inside of part C. The free end should be wrapped with smooth insulating tape, so that the cathode bias will not be shorted out if the capacitor is closed down too far.

Spring finger stock is used to provide flexible low-inductance contact with the plate, grid and cathode elements of the tubes. Finger stock numbers are given for stock obtained from Instrument Specialty Co., Little Falls, N.J. The material used for tube contact purposes is No. 97-380. That on the triangular cover plate is 97-134. If tubes with recessed grid rings are used (example: the 7289) it is necessary to solder a small piece of brass against the bottom of the grid finger stock, to prevent the tube from being

pushed in too far. Otherwise it is impossible to remove the tube without damage to either the finger stock or the tube. The finger stock used in the grid, plate and cathode holes should be preformed to fit, and then soldered in with a 200-watt or larger iron. That on part D is soldered to the outside of the plate. It may be necessary to strengthen the cover plate with a strip of brass soldered to the inside, opposite to the finger stock to prevent bulging. This should protrude about 1/16 inch from the edge of the cover plate. Any intermittent contact here will detune the input circuit severely.

The finger stock in the plate bypass should be flush with the sheet metal on the side facing the cavity. With the grid and cathode connections the stock may protrude somewhat. The soldering of the cavity parts should be done first. The parts should be lined up carefully, clamped together, and then soldered in place over a gas flame for preheating, doing the actual soldering with a small iron. Check alignment prior to final cool-down. The output BNC fitting can be soldered in at this time, adding the coupling loop later. It is merely a strip of copper or brass, 3/8 inch wide, soldered between the center pin of J2 and the cavity bottom. The strip should rest against the Teflon shoulder of the fitting, and extend 1/4 inch beyond the center pin before being bent 90 degrees down to the cavity bottom. Solder solidly to part A, and to the full length of the pin on J2. Now put in the finger stock. If a small iron is used, preheating with the gas flame, the heavy brass parts will not come loose. The top cover of the plate cavity, part B, is then soldered in place, using a clamp as before.

In cutting the Teflon insulation for the plate bypass, make tube holes only just large enough to clear the tube. There should also be some area of insulation around the outer edges of the top plate. These precautions are helpful in preventing arc-over.

Connection to the tube heaters is made by bending a U-shaped piece of beryllium copper or spring bronze to make a snug fit in the heater cup at the end of the tube. The air-wound rf choke is connected directly to this, with the other end running to the feedthrough bypasses. The heaters being brought out separately permits a check on condition of tubes, by turning off the heaters one at a time. Leaving the tube in place, but cold, does not detune the system, and a comparison of the tubes may be made in this way. Note that neither side of the heater circuit can be grounded.

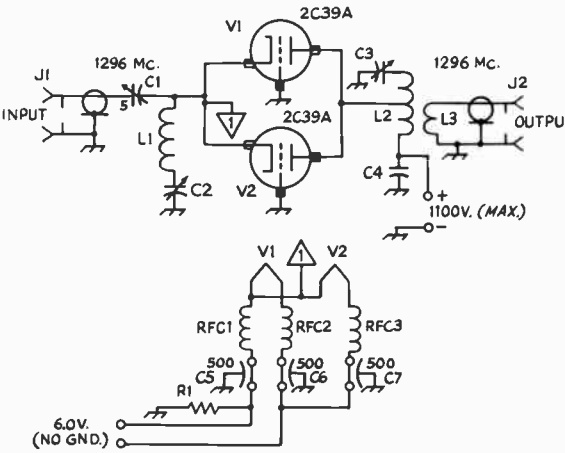

Fig. 7-43 — Representative circuit of the 1296-MHz cavity amplifier. The plate cavity and tuning device are indicated by L2,C3, the cathode inductance and tuning capacitor by L1,C2. Note that the heater supply must not be grounded.

C1 — 5-pF glass trimmer.
C2 — Beryllium-copper spring finger; see text and Fig. 7-44.
C3 — Coaxial plate capacitor (see text)
C4 — Plate bypass capacitor, composed of parts A and B, Fig. 7-45 separated by 0.02-inch Teflon sheet. See text.
C5, C6, C7 — Feedthrough bypass, 500 pF.
J1, J2 — Coaxial jack, BNC or TNC type.
L1 — Cathode inductor, part E, Fig. 7-45. See text and Fig. 7-44.
L2 — Plate cavity, composed of parts C, B and G of Fig. 7-45. See text.
L3 — Copper strap 3/8 inch wide, from pin of J2 to top side of part C.
RFC1, RFC2, RFC3 — 10 turns No. 22 enamel, 1/8-inch dia, 1 inch long.
R1 — 50 to 100 ohms, 2 watts (see text).

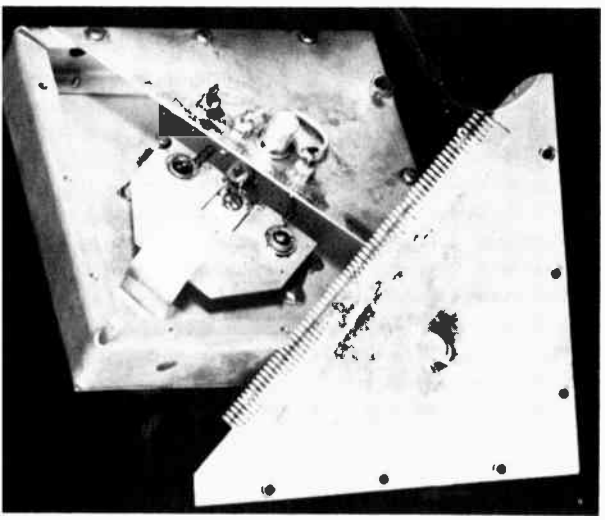

Fig. 7-44 — Bottom (or back) view of the cathode circuit and housing showing the divided cover plate, part D in Fig. 7-45. Inside are the cathode inductance, part E, and the spring-finger tuning capacitor plate, C2. The heater and cathode feedthrough bypasses and the input coaxial fitting are on the cover plate, near the center. The outside surface of the removable cover plate is shown.

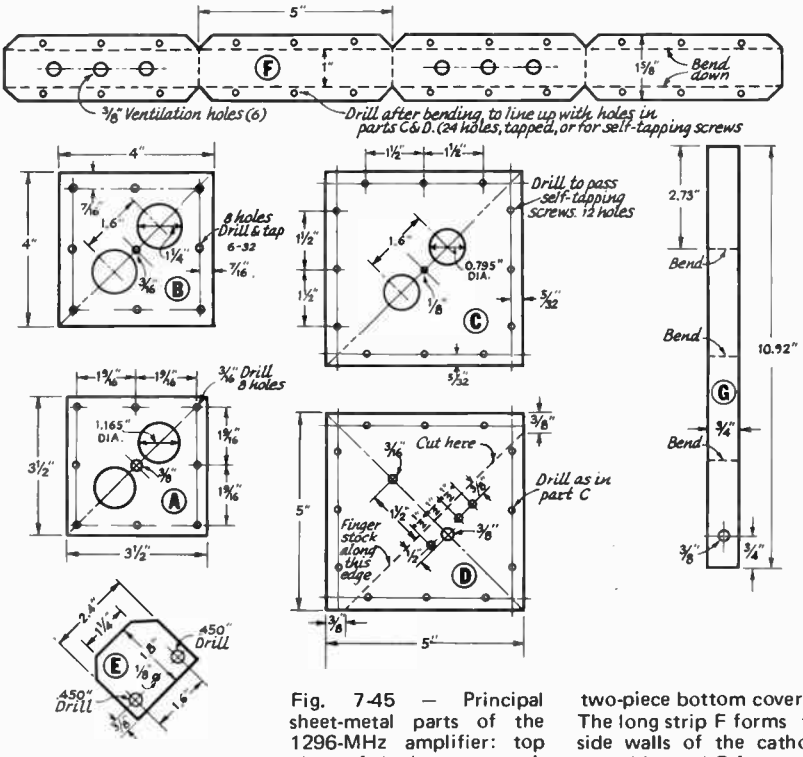

Fig. 7-45 — Principal sheet-metal parts of the 1296-MHz amplifier: top plate of the bypass capacitor, A; its bottom plate and top cover of the plate cavity, B; top plate of the cathode assembly, C; and two-piece bottom cover, D. The long strip F forms the side walls of the cathode assembly, and G forms the side walls of the plate cavity, both before bending into their square shape.

Tuning and Operation

When construction is completed and checked out, apply heater power to the tubes. Connect a milliammeter in series with the cathode resistor. Set the input glass trimmer at the middle of its range, and place the cover plate in position, but without putting in the screws as yet. Keep some pressure on it by hand to insure uniform contact. Apply 10 to 20 watts of driving power, tune C2, and observe the cathode current. Open the cathode compartment, move the input trimmer, replace the cover, and observe the current again. Repeat until highest current is achieved, but do not go over 120 mA. Reduce driving power, if necessary, to keep below this level. Fasten the cover plate in place, and recheck cathode current.

Supply cooling air, if this has not already been done. Be sure that adequate air flow is provided, especially if the plate input is to be near maximum ratings. If there is to be no cowling around the tube fins an air stream of some 150 ft^3/min from a low-pressure blower across the area of the tube fins is required. With an enclosure confining the air flow to a path through the fins a 30 ft^3/min high-pressure blower should suffice. In either case it does no harm to have more. If you have a quiet blower it probably is not enough!

Connect a 50-ohm termination to J2 and apply plate power, preferably at a lower voltage than the maximum that will be used eventually. Apply drive, and tune the input circuit for maximum plate current, and the output circuit for maximum output. A suitable indicator is an incandescent lamp connected at the end of a 50-foot length of RG-58 cable. This will be so lossy that it will look like 50 ohms, regardless of the termination, and the lamp will show relative output. Maximum output may not coincide with minimum plate current.

Once the amplifier appears to be working normally, plate voltage may be increased. Recheck the tuning adjustments for each change in plate voltage. Use a value of cathode resistance that will result in about 50 mA plate current with no drive. With 1000 volts on the plates do not operate the amplifier for more than a few seconds at a time under key-down conditions. With a normal cw keying duty cycle you can run up to 400 mA plate current. With ssb you may run up to 600 mA peak current, or a 300-mA indicated meter reading during normal voice operation. With the expected 100 watts output, with 300 to 400 in, the RG-58 cable should melt in a few minutes. This is not a very satisfactory method of measuring output, and some reliable power-indicating meter should be used for at least an intermittent check, if at all possible.

500-WATT AMPLIFIER FOR 432 MHz

One of the best tuned circuits, other than a resonant cavity, for an amplifier in the 420-MHz band is a coaxial line. To build a good one requires some metal work, but the assembly described here should not be difficult for the advanced worker. Amplifiers of this type have been built and used by W1QWJ and W1RVW, with excellent results. They run up to 500 watts input on fm and cw, and the amplifiers operate very much as they would on much lower frequencies.

Input circuit details are given for both 144 and 432 MHz, permitting the stage to be set up for tripling or straight-through operation. An inexpensive 4X150A running as a tripler will drive any of the 250-series tubes with ease.

Construction

The basic design should be clear from the photographs, Figs. 7-46, 47 and 49. Structural details may be obtained from Fig. 7-50. The straight-through amplifier and the 144-MHz grid circuit are shown schematically in Fig. 7-48. In the amplifier photographed, W1RVW used two separate 8 by 12-inch chassis, with their 8-inch surfaces fastened to a standard rack panel, 1 inch apart. They are held in firm alignment by an aluminum plate fastened at the back. One chassis carries the amplifier, the other a regulated screen supply.

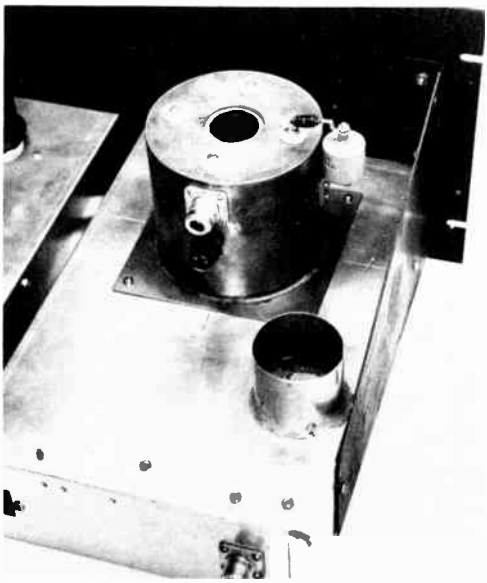

Fig. 7-46 — Looking down at the coaxial plate circuit of the 500-watt uhf amplifier. Air fed into the screened intake, lower edge of the picture, flows through the enclosed chassis below, up through the tube socket and out through the hole at the end of the plate line.

Fig. 7-47 — Interior of the plate circuit assembly, showing the center conductor with its ring of finger stock, the output-coupling loop, left, and the disk-type tuning capacitor, right.

The amplifier plate circuit is built in a 3 3/4-inch section of 4-inch copper tubing. This is mounted on a 5-inch square brass base plate. The top is a copper disk with a 1 3/8-inch air hole at the center. Inside the cover is a teflon-insulated capacitor plate, soldered to the inner conductor of the plate circuit, L3 in Fig. 7-48. The latter is 1 1/2-inch copper tubing, 2 3/16 inch long. A ring of finger stock extends 5/8 inch below the end of L3, for making contact to the 7203/4CX250B anode. Eimac CF-300 Finger Stock, 31/32 inch wide, is used.

The line is tuned by means of a brass-disk capacitor, C3, details of which are shown in Fig. 7-50. The method of keeping tension on the lead-screw may be of interest, since this is often a problem with this type of tuning device. Two methods have been used by the builders. The amplifier shown has a piece of brass 1/2 inch square and 3/4 inch long fastened to the outer wall. The screw passes through this, and the lower part of the block is slotted, up to the 1/4-inch hole. A tension screw threaded into the block makes it possible to pull the sides together slightly, as required. The other tension system is shown in Fig. 7-50. Here a springy piece of metal is threaded onto the lead-screw, and then put under tension slightly by screws at either end.

The capacitor plate, C5, at the top of the line is insulated from the cover with teflon sheet, the thickness of which is determined by the type of operation intended. If the amplifier is to be plate-modulated this sheet should be 1/32 inch. For cw or fm 0.01 inch is satisfactory. Four ceramic buttons insulate the screws that hold the capacitor together. Dimensions are not given for the holes required, as they will depend on the insulators available.

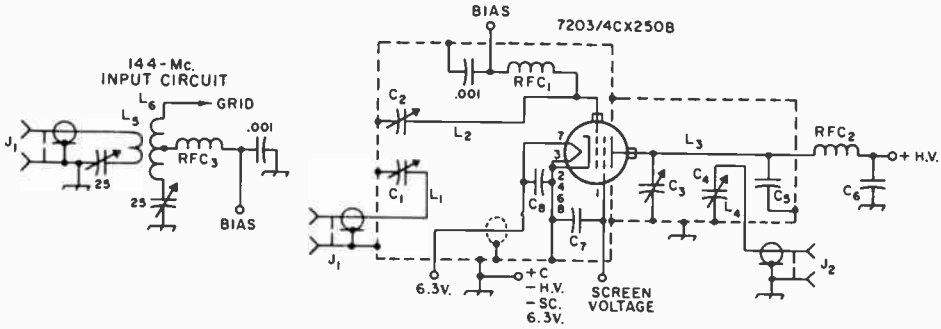

Fig. 7-48 — Schematic diagram of the 432-MHz amplifier, as set up for straight-through operation. An alternate 144-MHz input circuit for tripling is shown at the left.

C1, C2, C4 — 9-pF miniature trimmer (Johnson 160-104 or 9M11).
C3 — Disk-type tuning capacitor, 1 1/2-inch dia brass.
C5 — Teflon-insulated high-voltage bypass. See text.
C6 — 500-pF 20-kV TV-type capacitor.
C7, C8 — Built into socket.
J1, J2 — Coaxial fitting.
L1 — No. 12 wire loop, 6 inches overall. See Fig. 7-49-7-50.
L2 — 1/16-inch brass, 1 1/4 by 3 7/8 inches. See Fig. 7-49.
L3 — 1 1/2-inch copper tubing, with finger stock. See Fig. 7-50.
L4 — No. 16 wire loop, 1/4 inch wide. Top is 1/4 inch from C5.
L5 — 2 turns No. 16 enam., 1/2-inch dia, coupled to L6.
L6 — 4 turns No. 14 enam., 1/2-inch dia, 1 inch long, ct.
RFC1 — 8 turns No. 16 enam., 1/4-inch ID, 7/8 inch long.
RFC2 — 8 turns No. 20 enam., on 1-watt 1-megohm resistor.
RFC3 — 1.4-μH rf choke.

Note that the high voltage is on these screws when the amplifier is in operation. It is fed into one of them through a small rf choke, RFC2, the outer end of which is supported on a TV-type 500-pF high-voltage capacitor, C6. The lower end of C6 is supported on a brass angle bracket fastened to the side of the line assembly.

Output coupling from the line is by means of a small loop of wire, L4, mounted in a vertical position near the top of the line. It is series-tuned by C4, directly below it.

Details of the 432-MHz grid circuit and its input coupling are given in Fig. 7-50. The input capacitance of these tubes is high, so a half-wave line must be used. Even with this type of grid circuit, the inductance must be very low to tune to 432 MHz. Note that L1 is less than 4 inches long, despite its 1 1/4-inch width.

Operation

Because of the high-efficiency coaxial plate circuit, the amplifier operates almost as it would on lower frequencies. The manufacturer's ratings may be followed, using the maximum figures if desired. It is usually desirable to make provision for lowering the plate voltage in some way, however, as the difference between the maximum rating and something perhaps 25 to 50 percent lower will make only a trifling difference in results, except where contact is being maintained under marginal conditions.

About the only variation from lower-frequency practice is the need for keeping the heater voltage low. The rated voltage for these tubes is 6.0, not 6.3, and at frequencies above 300 MHz it should be reduced. At 432 MHz the voltage should be 5.5. With higher voltages the back-bombardment that the cathode is subjected to raises the overall tube temperature and shortened tube life results. The drifting of operating conditions often observed in vhf and uhf amplifiers is likely to be traceable to excessive heater voltage.

Be sure to use plenty of air flow through the socket and tube anode. In the amplifier shown, air

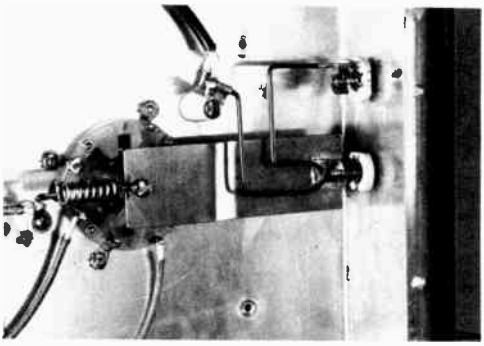

Fig. 7-49 — Bottom view of the amplifier, showing the strip of brass used for the grid circuit inductance, L2.

is fed into an opening in the top of the chassis. The bottom has a tight-fitting cover, so that the only air route open is through the socket and out through anode and L3.

Adjustment of the position of the output coupling loop, L4, with respect to the inner conductor of the line is fairly critical, if maximum efficiency is to be achieved. In one of the amplifiers the coupling loop, the coaxial fitting and the series capacitor were made into a single assembly on a curved plate of copper or brass. This could be removed at will, to permit adjustment of the shape and position of the coupling loop. It is fastened to the outside of the main cylinder with small brass screws, covering a rectangular hole in the cylinder cut for this purpose.

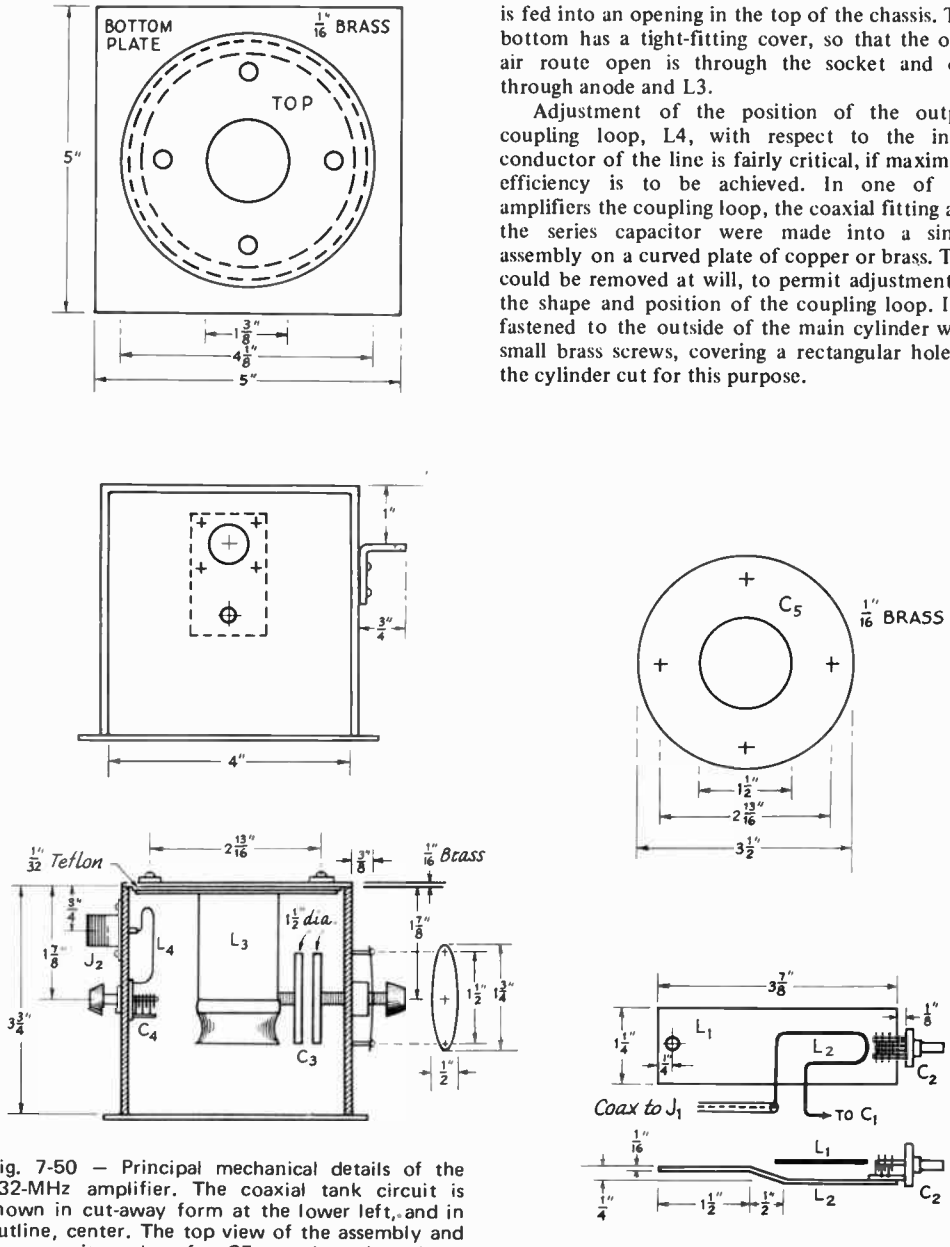

Fig. 7-50 — Principal mechanical details of the 432-MHz amplifier. The coaxial tank circuit is shown in cut-away form at the lower left, and in outline, center. The top view of the assembly and the capacitor plate for C5 are the other views. Details of the strip-line grid circuit are at the lower right.

Receiving Systems

The performance of a communications receiver can be measured by its ability to pick up weak signals and separate them from the noise and interference while at the same time holding them steady at the same dial settings. The difference between a good receiver and a poor one can be the difference between copying a weak signal well, or perhaps not copying it at all.

Whether the receiver is of home-made or commercial origin, its performance can range from excellent to extremely poor, and high cost or circuit complexity cannot assure proper results. Some of the simplest of receivers can provide excellent results if careful attention is given to their design and proper use. Conversely, the most expensive of receivers can provide poor results if not operated in a competent manner. Therefore, the operator's success at sorting the weak signals out of the noise and interference is dependent upon the correct use of a properly designed, correctly operated receiver.

Communications receivers are rated by their sensitivity (ability to pick up weak signals), their selectivity (the ability to distinguish between signals that are extremely close together in terms of frequency), and by their stability. The latter trait assures that once a stable signal is tuned in it will remain tuned without periodic retuning of the receiver controls (especially the main tuning and BFO controls).

A well-designed modern receiver must be able to receive all of the popular modes of emission if it is to be truly versatile. It should be capable of handling cw, ssb, a-m, fm, and RTTY signals.

The type of detection to be used will depend on the job the receiver is called upon to do. Simple receivers consisting of a single stage of detection (regenerative detector) followed by a one- or two-stage audio amplifier are often adequate for portable and emergency use over short distances. This type of receiver can be quite compact and light weight and can provide many hours of operation from a dry-battery pack if transistorized circuitry is used. Similarly, superregenerative detectors can be used in the same way, but are suitable for copying only a-m and wide-band fm signals. Superheterodyne receivers are the most popular and are capable of better performance than the foregoing types. *Heterodyne* detectors are used for ssb and cw reception in the latter. If a regenerative detector is made to oscillate and provide a steady signal, it is known as an autodyne detector. A beat-frequency oscillator, or BFO, is used to generate a steady signal in the superheterodyne receiver. This signal is applied to the detector stage to permit the reception of ssb and cw signals.

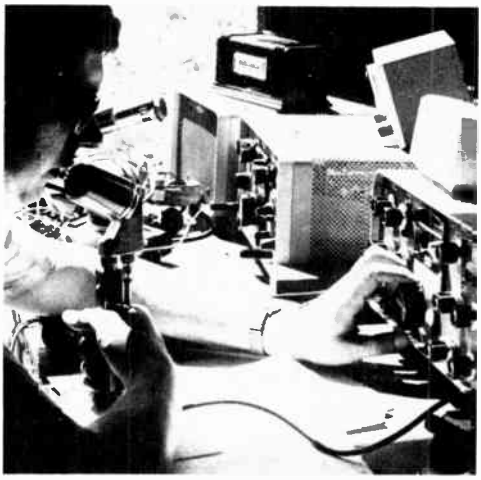

Fig. 8-1 — The success of amateur on-the-air operation is, in a large part, determined by a receiver. A good receiver, mated with a good pair of ears, is an unbeatable combination.

Communications receivers should have a slow tuning rate and a smooth-operating tuning-dial mechanism if any reasonable degree of selectivity is used. Without these features cw and ssb signals are extremely hard to tune in. In fact, one might easily tune past a weak signal without knowing it was there if a fast tuning rate were used.

RECEIVER CHARACTERISTICS

Sensitivity

In commercial circles "sensitivity" is defined as the signal at the input of the receiver required to give a signal-plus-noise output some stated ratio (generally 10 dB) above the noise output of the receiver. This is a useful sensitivity measure for the amateur, since it indicates how well a weak signal will be heard. However, it is not an absolute method, because the bandwidth of the receiver plays a large part in the result.

The random motion of the molecules in the antenna and receiver circuits generates small

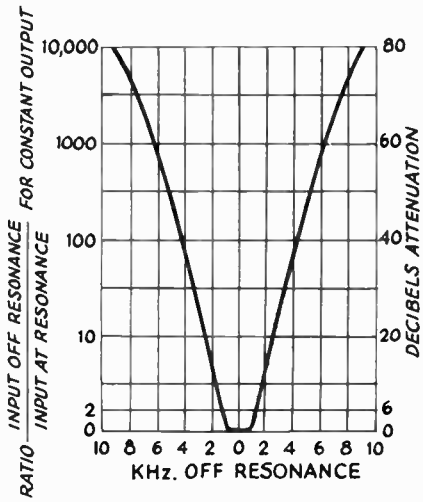

Fig. 8-2 — Typical selectivity curve of a modern superheterodyne receiver. Relative response is plotted against deviations above and below the resonance frequency. The scale at the left is in terms of voltage ratios, the corresponding decibel steps are shown at the right.

voltages called thermal-agitation noise. Thermal-agitation noise is independent of frequency and is proportional to the (absolute) temperature, the resistive component of the impedance across which the thermal agitation is produced, and the bandwidth. Noise is generated in vacuum tubes and semiconductors by random irregularities in the current flow within them; it is convenient to express this shot-effect noise as an equivalent resistance in the grid circuit of a noise-free tube. This equivalent noise resistance is the resistance (at room temperature) that placed in the grid circuit of a noise-free tube will produce plate-circuit noise equal to that of the actual tube. The equivalent noise resistance of a vacuum tube increases with frequency.

An ideal receiver would generate no noise in its tubes or semiconductors and circuits, and the minimum detectable signal would be limited only by the thermal noise in the antenna. In a practical receiver, the limit is determined by how well the amplified antenna noise overrides the other noise of the input stage. (It is assumed that the first stage of any good receiver will be the determining factor; the noise contributions of subsequent stages should be insignificant by comparison.) At frequencies below 20 or 30 MHz the site noise (atmospheric and man-made noise) is generally the limiting factor.

The degree to which a practical receiver approaches the quiet ideal receiver of the same bandwidth is given by the noise figure of the receiver. Noise figure is defined as the ratio of the signal to noise power ratio of the ideal receiver to the signal-to-noise power ratio of the actual receiver output. Since the noise figure is a ratio, it is usually given in decibels; it runs around 5 to 10 dB for a good communications receiver below 30 MHz. Although noise figures of 2 to 4 dB can be obtained, they are of little or no use below 30 MHz except in extremely quiet locations or when a very small antenna is used. The noise figure of a receiver is not modified by changes in bandwidth.

Selectivity

Selectivity is the ability of a receiver to discriminate against signals of frequencies differing from that of the desired signal. The overall selectivity will depend upon the selectivity and the number of the individual tuned circuits.

The selectivity of a receiver is shown graphically by drawing a curve that gives the ratio of signal strength required at various frequencies off resonance to the signal strength at resonance, to give constant output. A resonance curve of this type is shown in Fig. 8-2. The bandwidth is the width of the resonance curve (in Hz or kHz) of a receiver at a specified ratio; in the typical curve of Fig. 8-2 the bandwidths for response ratios of 2 and 1000 (described as "-6 dB" and "-60 dB") are 2.4 and 12.2 kHz respectively.

The bandwidth at 6 dB down must be sufficient to pass the signal and its sidebands if faithful reproduction of the signal is desired. However, in the crowded amateur bands, it is generally advisable to sacrifice fidelity for intelligibility. The ability to reject adjacent-channel signals depends upon the skirt selectivity of the receiver, which is determined by the bandwidth at high attenuation. In a receiver with excellent skirt selectivity, the ratio of the 6-dB bandwidth to the 60-dB bandwidth will be about 0.2 for code and 0.3 for phone. The minimum usable bandwidth at 6 dB down is approximately 150 Hz for code reception and approximately 2000 Hz for phone.

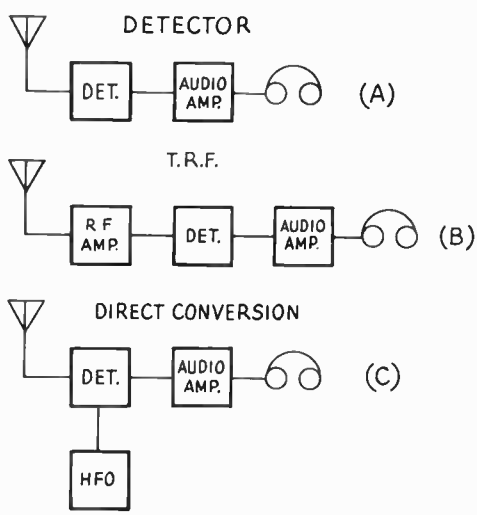

Fig. 8-3 — Block diagrams of three simple receivers.

Stability

The stability of a receiver is its ability to "stay put" on a signal under varying conditions of gain-control setting, temperature, supply-voltage changes and mechanical shock. The term "unstable" is also applied to a receiver that breaks into oscillation or a regenerative condition with some settings of its controls that are not specifically intended to control such a condition.

SIMPLE RECEIVERS

The simplest receiver design consists of a detector followed by an audio amplifier, as shown in Fig. 8-3A. Obviously, the sensitivity of the detector determines how well this receiver will work. Various schemes have been developed to increase detector sensitivity, including the regenerative and superregenerative detectors described later in this chapter. Another way to increase receiver sensitivity is to add one or more rf-amplifier stages before the detector. This approach is called the tuned-radio-frequency, or TRF receiver, Fig. 8-3B.

Another design which has become popular for use in battery-powered equipment is the direct-conversion receiver, Fig. 8-3C. Here, a detector is employed along with a variable-frequency oscillator which is tuned just slightly off the frequency of the incoming signal to produce a beat note. A narrow-bandwidth audio filter located between the detector and the aduio amplifier provides selectivity. However, the lack of automatic gain control limits the range over which the receiver can handle strong signals unless a manual rf-gain control is employed. FETs and ICs can be used as detectors to provide up to 90 dB of dynamic range – typically 3 μV to 100 mV of input signal.

DETECTION AND DETECTORS

Detection (demodulation) is the process of extracting the signal information from a modulated carrier wave. When dealing with an a-m signal, detection involves only the rectification of the rf signal. During fm reception, the incoming signal must be converted to an a-m signal for detection. See Chapter 14.

Detector sensitivity is the ratio of desired detector output to the input. Detector linearity is a measure of the ability of the detector to reproduce the exact form of the modulation on the incoming signal. The resistance or impedance of the detector is the resistance or impedance it presents to the circuits it is connected to. The input resistance is important in receiver design, since if it is relatively low it means that the detector will consume power, and this power must be furnished by the preceding stage. The signal-handling capability means the ability to accept signals of a specified amplitude without overloading or distortion.

Diode Detectors

The simplest detector for a-m is the diode. A germanium or silicon crystal is an imperfect form of diode (a small current can usually pass in the reverse direction), but the principle of detection in a semiconductor diode is similar to that in a vacuum-tube diode.

Circuits for both half-wave and full-wave diodes are given in Fig. 8-4. The simplified half-wave circuit at Fig. 8-4A includes the rf tuned circuit, L2C1, a coupling coil, L1, from which the rf energy is fed to L2C1, and the diode, CR1, with its load resistance, R1, and bypass capacitor, C2.

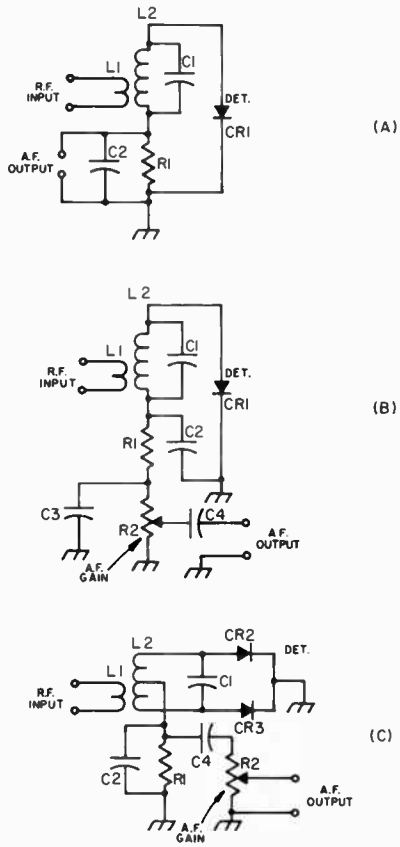

Fig. 8-4 – Simplified and practical diode detector circuits. A, the elementary half-wave diode detector; B, a practical circuit, with rf filtering and audio output coupling; C, full-wave diode detector, with output coupling indicated. The circuit, L2C1, is tuned to the signal frequency; typical values for C2 and R1 in A and C are 250 pF and 250,000 ohms, respectively; in B, C2 and C3 are 100 pF each; R1, 50,000 ohms; and R2, 250,000 ohms. C4 is 0.1 μF and R3 may be 0.5 to 1 megohm.

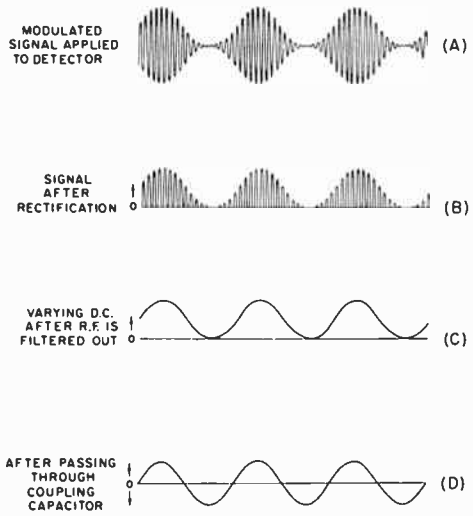

Fig. 8-5 — Diagrams showing the detection process.

The progress of the signal through the detector or rectifier is shown in Fig. 8-5. A typical modulated signal as it exists in the tuned circuit is shown at A. When this signal is applied to the rectifier, current will flow only during the part of the rf cycle when the anode is positive with respect to cathode, so that the output of the rectifier consists of half-cycles of rf. These current pulses flow in the load circuit comprised of R1 and C2, the resistance of R1 and the capacitance of C2 being so proportioned that C2 charges to the peak value of the rectified voltage on each pulse and retains enough charge between pulses so that the voltage across R1 is smoothed out, as shown in C. C2 thus acts as a filter for the radio-frequency component of the output of the rectifier, leaving a dc component that varies in the same way as the modulation on the original signal. When this varying dc voltage is applied to a following amplifier through a coupling capacitor (C4 in Fig. 8-4), only the *variations* in voltage are transferred, so that the final output signal is ac, as shown in D.

In the circuit at 8-4B, R1 and C2 have been divided for the purpose of providing a more effective filter for rf. It is important to prevent the appearance of any rf voltage in the output of the detector, because it may cause overloading of a succeeding amplifier stage. The audio-frequency variations can be transferred to another circuit through a coupling capacitor, C4. R2 is usually a "potentiometer" so that the audio volume can be adjusted to a desired level.

Coupling from the potentiometer (volume control) through a capacitor also avoids any flow of dc through the moving contact of control. The flow of dc through a high-resistance volume control often tends to make the control noisy (scratchy) after a short while.

The full-wave diode circuit at 8-4C differs in operation from the half-wave circuit only in that both halves of the rf cycle are utilized. The full-wave circuit has the advantage that rf filtering is easier than in the half-wave circuit. As a result, less attenuation of the higher audio frequencies will be obtained for any given degree of rf filtering.

The reactance of C2 must be small compared to the resistance of R1 at the radio frequency being rectified, but at audio frequencies must be relatively large compared to R1. If the capacitance of C2 is too large, response at the higher audio frequencies will be lowered.

Compared with most other detectors, the gain of the diode is low, normally running around 0.8 in audio work. Since the diode consumes power, the *Q* of the tuned circuit is reduced, bringing about a reduction in selectivity. The loading effect of the diode is close to one half the load resistance. The detector linearity is good, and the signal-handling capability is high.

Plate Detectors

The plate detector is arranged so that rectification of the rf signal takes place in the plate circuit of the tube or the collector of an FET. Sufficient negative bias is applied to the grid to bring the plate current nearly to the cutoff point, so that application of a signal to the grid circuit causes an increase in average plate current. The average plate current follows the changes in the signal in a fashion similar to the rectified current in a diode detector.

In general, transformer coupling from the plate circuit of a plate detector is not satisfactory, because the plate impedance of any tube is very high when the bias is near the plate-current cutoff point. The same is true of a JFET or MOSFET. Impedance coupling may be used in place of the

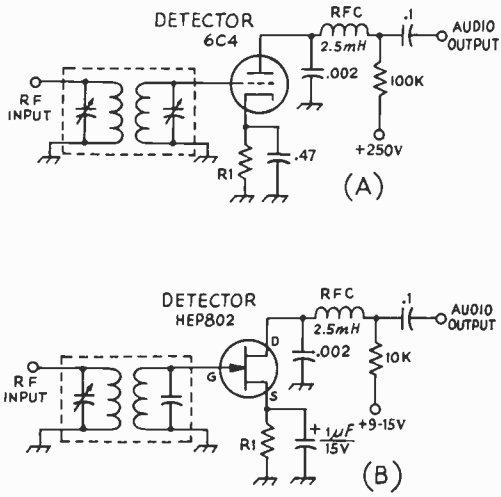

Fig. 8-6 — Circuits for plate detection. A, triode; B, FET. The input circuit, L2C1, is tuned to the signal frequency. Typical values for R1 are 22,000 to 150,000 ohms for the circuit at A, and 4700 to 22,000 ohms for B.

resistance coupling shown in Fig. 8-6. Usually 100 henrys or more of inductance are required.

The plate detector is more sensitive than the diode because there is some amplifying action in the tube or transistor. It will handle large signals, but is not so tolerant in this respect as the diode. Linearity, with the self-biased circuits shown, is good. Up to the overload point the detector takes no power from the tuned circuit, and so does not affect its Q and selectivity.

Infinite-Impedance Detector

The circuit of Fig. 8-7 combines the high signal-handling capabilities of the diode detector with low distortion and, like the plate detector, does not load the tuned circuit it connects to. The circuit resembles that of the plate detector, except that the load resistance, 27kΩ, is connected between source and ground and thus is common to both gate and drain circuits, giving negative feedback for the audio frequencies. The source resistor is bypassed for rf but not for audio, while the drain circuit is bypassed to ground for both audio and radio frequencies. An rf filter can be connected between the cathode and the output coupling capacitor to eliminate any rf that might otherwise appear in the output.

The drain current is very low at no signal, increasing with signal as in the case of the plate detector. The voltage drop across the source resistor consequently increases with signal. Because of this and the large initial drop across this resistor, the gate usually cannot be driven positive by the signal.

HETERODYNE AND PRODUCT DETECTORS

Any of the foregoing a-m detectors becomes a heterodyne detector when a local-oscillator (BFO) is added to it. The BFO signal amplitude should be 5 to 20 times greater than that of the strongest incoming cw or ssb signal if distortion is to be minimized. These heterodyne detectors are frequently used in receivers that are intended for a-m as well as cw and ssb reception. A single detector can thus be used for all three modes, and elaborate switching techniques are not required. To receive a-m it is merely necessary to disable the BFO circuit.

The name product detector has been given to heterodyne detectors in which special attention has been paid to minimizing distortion and intermodulation (IM) products. Product detectors have been thought of by some as a type of detector whose output signal vanishes when the BFO signal is removed. Although some product detectors function that way, such operation is not a criterion. A *product* is something that results from the combination of two or more things, hence any heterodyne detector can rightfully be regarded as a product detector. The two input signals (i-f and BFO) are fed into what is essentially a mixer stage. The difference in frequency (after filtering out and removing the i-f and BFO signals from the mixer output) is fed to the audio amplifier stages and increased to speaker or headphone level. Although product detectors are intended primarily for use with cw and ssb signals, a-m signals can be copied satisfactorily on receivers which have good i-f selectivity. The a-m signal is tuned in as though it were an ssb signal. When properly tuned, the heterodyne from the a-m carrier is not audible.

A triode product-detector circuit is given in Fig. 8-8A. The i-f signal is fed to the grid of the tube, while the BFO energy is supplied to the cathode. The two signals mix to produce audio-frequency output from the plate circuit of the tube. The BFO voltage should be about 2 V rms and the signal should not exceed 0.3 V rms for linear detection. The degree of plate filtering required will depend on the frequency of operation. The values shown in Fig. 8-8A are sufficient for 450-kHz operation. At low frequencies more elaborate filtering is needed. A similar circuit using a JFET is shown at B.

In the circuit of Fig. 8-8C, two germanium diodes are used, though a 6AL5 tube could be substituted. The high back resistance of the diodes is used as a dc return; if a 6AL5 is used the diodes must be shunted by 1-megohm resistors. The BFO signal should be at least 10 or 20 times the amplitude of the incoming signal.

At Fig. 8-8D a two-diode circuit, plus one transistor, provides both a-m and product detection. This circuit is used in the Drake SPR-4 receiver. Balanced output is required from the BFO. The a-m detector is forward biased to prevent the self-squelching effect common to single-diode detectors (caused by signals of low level not exceeding the forward voltage drop of the diode). The IC detector given in Fig. 8-8E has several advantages. First, the BFO injection only needs to be equal to the input signal, because of the additional amplification of the BFO energy which takes place within the IC. Also, output filtering is quite simple, as the double-balanced design reduces the level of i-f signal and BFO voltage appearing in the output circuit. Motorola's MC1496G has a dynamic range of 90 dB and a conversion gain of about 12 dB, making it a good choice for use in a direct-conversion receiver.

A multipurpose IC i-f amplifier/detector/agc system, the National Semiconductor LM373, is shown in Fig. 8-8F. A choice of a-m, ssb, cw, and fm detection is available, as well as a 60-dB-range agc system and i-f amplification of 70 dB. Recovered audio is typically 120 mV. L1C1 tune to the i-f frequency.

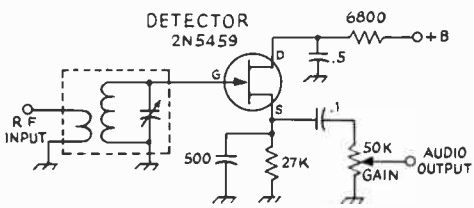

Fig. 8-7 — The infinite-impedance detector. The input circuit, L2C1, is tuned to the signal frequency.

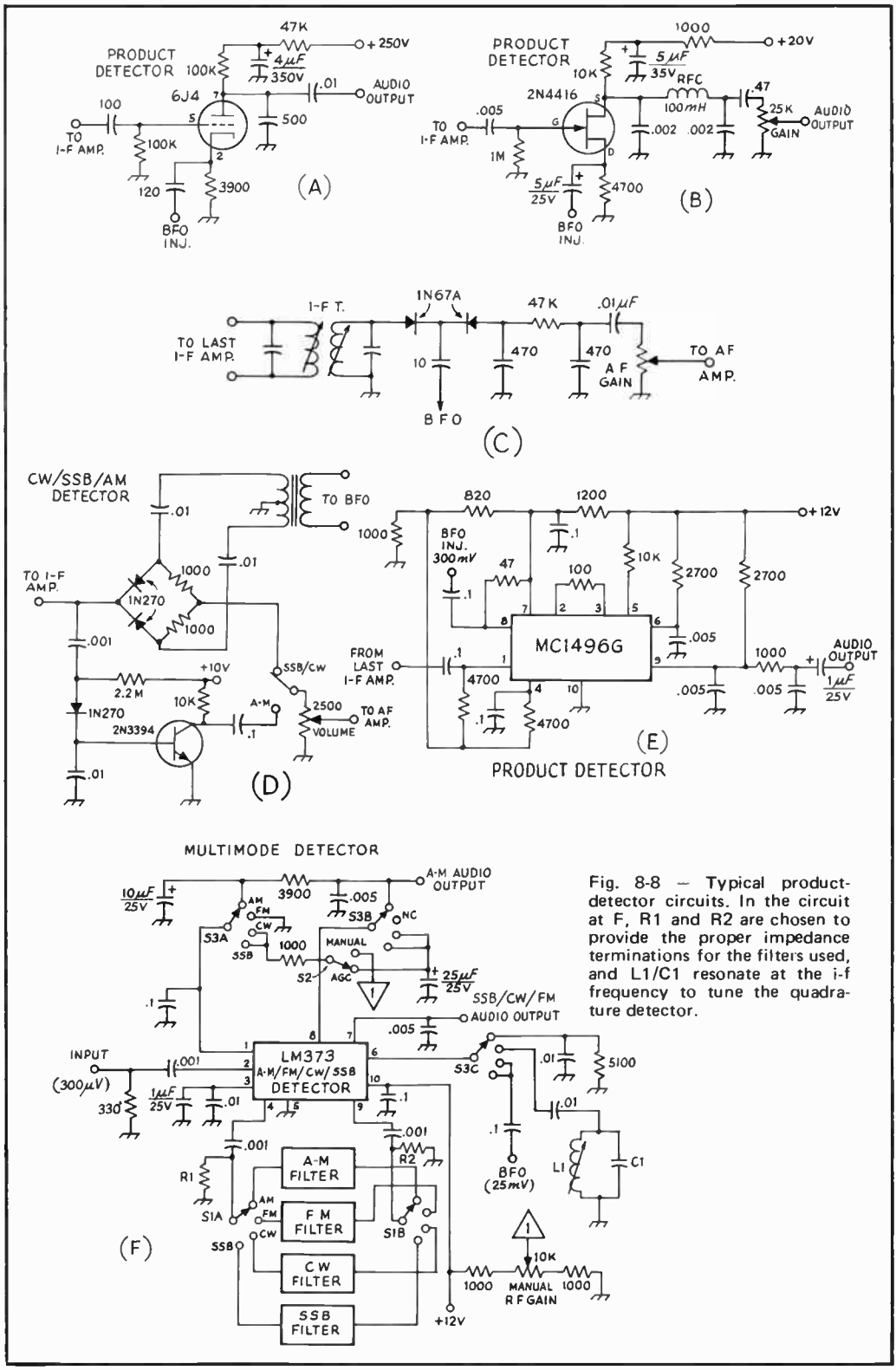

Fig. 8-8 — Typical product-detector circuits. In the circuit at F, R1 and R2 are chosen to provide the proper impedance terminations for the filters used, and L1/C1 resonate at the i-f frequency to tune the quadrature detector.

REGENERATIVE DETECTORS

By providing controllable rf feedback (regeneration) in a triode, pentode, or transistorized-detector circuit, the incoming signal can be amplified many times, thereby greatly increasing the sensitivity of the detector. Regeneration also increases the effective Q of the circuit and thus the selectivity. The grid-leak type of detector is most suitable for the purpose.

The grid-leak detector is a combination diode rectifier and audio-frequency amplifier. In the circuit of Fig. 8-9A, the grid corresponds to the diode plate and the rectifying action is exactly the same as in a diode. The dc voltage from rectified-current flow through the grid leak, R1, biases the grid negatively, and the audio-frequency variations in voltage across R1 are amplified through the tube as in a normal af amplifier. In the plate circuit, R2 is the plate-load resistance and C3 and RFC a filter to eliminate rf in the output circuit.

A grid-leak detector has considerably greater sensitivity than a diode. The sensitivity is further increased by using a screen-grid tube instead of a triode. The operation is equivalent to that of the triode circuit. The screen bypass capacitor should have low reactance for both radio and audio frequencies.

The circuit in Fig. 8-9B is regenerative, the feedback being obtained by feeding some signal from the drain circuit back to the gate by inductive coupling. The amount of regeneration must be controllable, because maximum regenerative amplification is secured at the critical point where the circuit is just about to oscillate. The ciritical point in turn depends upon circuit conditions, which may vary with the frequency to which the detector is tuned. An oscillating detector can be detuned slightly from an incoming cw signal to give *autodyne* reception. The circuit of Fig. 8-9B uses a control which varies the supply voltage to control regeneration. If L2 and L3 are wound end to end in the same direction, the drain connection is to the outside of the "tickler" coil, L3, when the gate connection is to the outside end of L2.

Although the regenerative detector is more sensitive than any other type, its many disadvantages commend it for use only in the simplest receivers. The linearity is rather poor, and the signal-handling capability is limited. The signal-handling capability can be improved by reducing R1 to 0.1 megohm, but the sensitivity will be decreased. The degree of antenna coupling is often critical.

A bipolar transistor is used in a regenerative detector hookup at C. The emitter is returned to dc ground through a 1000-ohm resistor and a 50,000-ohm regeneration control. The 1000-ohm resistor keeps the emitter above ground at rf to permit feedback between the emitter and collector. A 5-pF capacitor (more capacitance might be required) provides the feedback path. C1 and L2 comprise the tuned circuit, and the detected signal is taken from the collector return through T1. A transistor with medium or high beta works best in circuits of this type and should have a frequency rating which is well above the desired operating frequency. The same is true of the frequency rating of any FET used in the circuit at B.

Superregenerative detectors are somewhat more sensitive than straight regenerative detectors and can employ either tubes or transistors. An in-depth discussion of superregenerative detectors is given in Chapter 9.

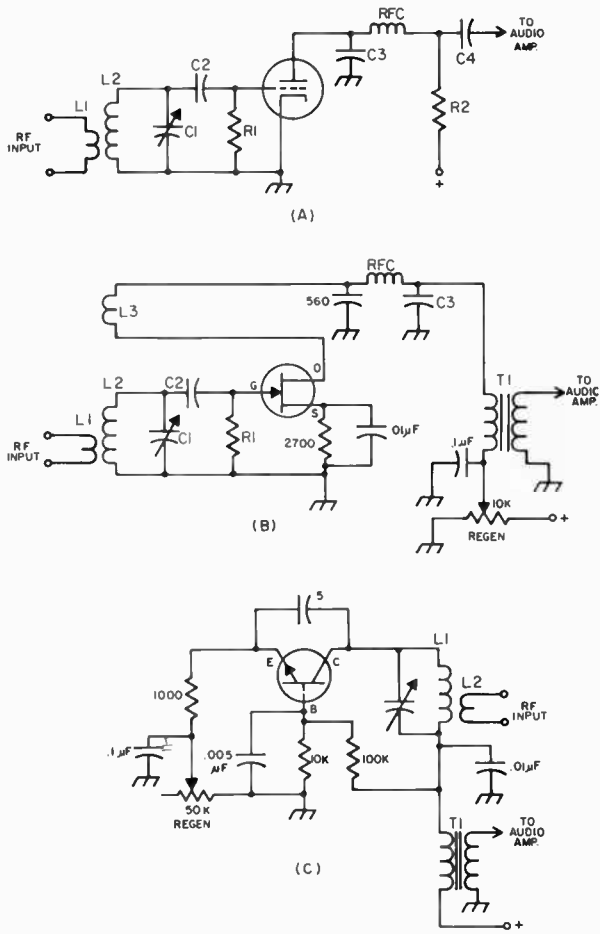

Fig. 8-9 — (A) Triode grid-leak detector combines diode detection with triode amplification. Although shown here with resistive plate load, R2, an audio choke coil or transformer could be used.

(B) Feeding some signal from the drain circuit back to the gate makes the circuit regenerative. When feedback is sufficient, the circuit will oscillate. The regeneration is adjusted by a 10,000-ohm control which varies the drain voltage.

(C) An npn bipolar transistor can be used as a regenerative detector too. Feedback occurs between collector and emitter through the 5-pF capacitor. A 50,000-ohm control in the emitter return sets the regeneration. Pnp transistors can also be used in this circuit, but the battery polarity must be reversed.

Tuning

For cw reception, the regeneration control is advanced until the detector breaks into a "hiss" which indicates that the detector is oscillating. Further advancing of the regeneration control will result in a slight decrease in the hiss.

Code signals can be tuned in and will give a tone with each signal depending on the setting of the tuning control. A low-pitched beat note cannot be obtained from a strong signal because the detector "pulls in" or "blocks."

The point just after the detector starts oscillating is the most sensitive condition for code reception. Further advancing the regeneration control makes the receiver less prone to blocking, but also less sensitive to weak signals.

If the detector is in the oscillating condition and an a-m phone signal is tuned in, a steady audible beat-note will result. While it is possible to listen to phone if the receiver can be tuned to exact zero beat, it is more satisfactory to reduce the regeneration to the point just before the receiver goes into oscillation. This is also the most sensitive operating point.

TUNING METHODS

Tuning

The resonant frequency of a circuit can be shifted by changing either the inductance or the capacitance in the circuit. Panel control of inductance (permeability-tuned oscillator, or PTO) is used to tune a few commercial receivers, but most receivers depend upon panel-mounted variable capacitors for tuning.

Tuning Rate

For ease in tuning a signal, it is desirable that the receiver have a tuning rate in keeping with the type of signal being received and also with the selectivity of the receiver. A tuning rate of 500 kHz per knob revolution is normally satisfactory for a broadcast receiver, but 100 kHz per revolution is almost too fast for easy ssb reception – around 25 to 50 kHz being more desirable.

Band Changing

The same coil and tuning capacitor cannot be used for, say, 3.5 to 14 MHz because of the impracticable maximum-to-minimum capcitance ratio required. It is necessary, therefore, to provide a means for changing the circuit constants for various frequency bands. As a matter of convenience the same tuning capacitor usually is retained, but new coils are inserted in the circuit for each band.

One method of changing inductances is to use a switch having an appropriate number of contacts, which connects the desired coil and disconnects the others. The unused coils are sometimes short-circuited by the switch, to avoid undesirable self-resonances.

Another method is to use coils wound on forms that can be plugged into suitable sockets. These plug-in coils are advantageous when space is at a premium, and they are also very useful when considerable experimental work is involved.

Bandspreading

The tuning range of a given coil and variable capacitor will depend upon the inductance of the coil and the change in tuning capacitance. To cover a wide frequency range and still retain a suitable tuning rate over a relatively narrow frequency range requires the use of bandspreading. Mechanical bandspreading utilizes some mechanical means to reduce the tuning rate; a typical example is the two-speed planetary drive to be found in some receivers. Electrical bandspreading is obtained by using a suitable circuit configuration. Several of these methods are shown in Fig. 8-10.

In A, a small bandspread capacitor, C1 (15- to 25-pF maximum), is used in parallel with capacitor C2, which is usually large enough (100 to 140 pF) to cover a 2-to-1 frequency range. The setting of C2 will determine the minimum capacitance of the circuit, and the maximum capacitance for bandspread tuning will be the maximum capacitance of C1 plus the setting of C2. The inductance of the coil can be adjusted so that the maximum-minimum ratio will give adequate bandspread. It is almost impossible, because of the nonharmonic relation of the various band limits, to get full bandspread on all bands with the same pair of capacitors. C2 is variously called the bandsetting or main-tuning capacitor. It must be reset each time the band is changed.

If the capacitance change of a tuning capacitor is known, the total fixed shunt capacitance (Fig. 8-10A) for covering a band of frequencies can be found from Fig. 8-11.

Example: What fixed shunt capacitance will allow a capacitor with a range of 5 to 30 pF to tune 3.45 to 4.05 MHz?

$$(4.05 - 3.45) \div 4.05 = 0.148$$

From Fig. 8-11, the capacitance ratio is 0.38, and hence the minimum capacitance is $(30 - 5) \div 0.38 = 66$ pF. The 5-pF minimum of the tuning capacitor, the tube capacitance and any stray capacitance must be included in the 66 pF.

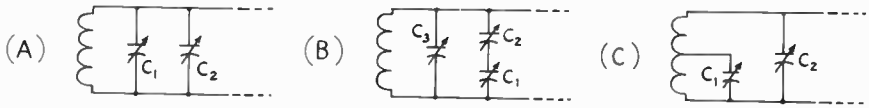

Fig. 8-10 – Essentials of the three basic bandspread tuning systems.

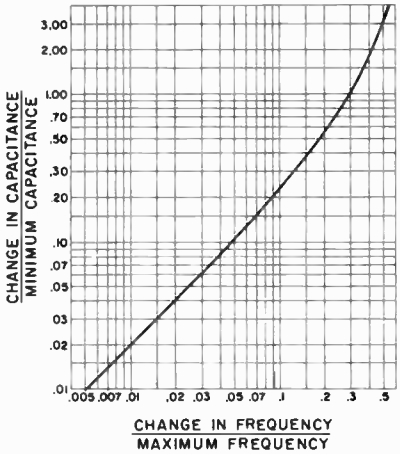

Fig. 8-11 — Minimum circuit capacitance required in the circuit of Fig. 8-10A as a function of the capacitance change and the frequency change. Note that *maximum* frequency and *minimum* capacitance are used.

The method shown at Fig. 8-10B makes use of capacitors in series. The tuning capacitor, C1, may have a maximum capacitance of 100 pF or more. The minimum capacitance is determined principally by the setting of C3, which usually has low capacitance, and the maximum capacitance by the setting of C2, which is in the order of 25 to 50 pF. This method is capable of close adjustment to practically any desired degree of bandspread. Either C2 or C3 must be adjusted for each band or separate preadjusted capacitors must be switched in.

The circuit at Fig. 8-10C also gives complete spread on each band. C1, the bandspread capacitor, may have any convenient value; 50 pF is satisfactory. C2 may be used for continuous frequency coverage ("general coverage") and as a bandsetting capacitor. The effective maximum-minimum capacitance ratio depends on C2 and the point at which C1 is tapped on the coil. The nearer the tap to the bottom of the coil, the greater the bandspread, and vice versa. For a given coil and tap, the bandspread will be greater if C2 is set at higher capacitance. C2 may be connected permanently across the individual inductor and preset, if desired. This requires a separate capacitor for each band, but eliminates the necessity for resetting C2 each time.

Ganged Tuning

The tuning capacitors of the several rf circuits may be coupled together mechanically and operated by a single control. However, this operating convenience involves more complicated construction, both electrically and mechanically. It becomes necessary to make the various circuits **track** – that is, tune to the same frequency for a given setting of the tuning control.

True tracking can be obtained only when the inductance, tuning capacitors, and circuit inductances and minimum and maximum capacitances are identical in all "ganged" stages. A small **trimmer** or **padding** capacitor may be connected across the coil, so that various minimum capacitances can be compensated. The use of the trimmer necessarily increases the minimum circuit capacitance but is a necessity for satisfactory tracking. Midget capacitors having maximum capacitances of 15 to 30 pF are commonly used.

The same methods are applied to bandspread circuits that must be tracked. The inductance can be trimmed by using a coil form with an adjustable brass (or copper) core. This core material will reduce the inductance of the coil, raising the resonant frequency of the circuit. Powdered-iron or ferrite core material can also be used, but will lower the resonant frequency of the tuned circuit because it increases the inductance of the coil. Ferrite and powdered-iron cores will raise the Q of the coil provided the core material is suitable for the frequency being used. Core material is now available for frequencies well into the vhf region.

The Superheterodyne

In a superheterodyne receiver, the frequency of the incoming signal is heterodyned to a new radio frequency, the intermediate frequency (abbreviated "i-f"), then amplified, and finally detected. The frequency is changed by modulating the output of a tunable oscillator (the high-frequency, or local oscillator) by the incoming signal in a mixer or converter stage to produce a side frequency equal to the intermediate frequency. The other side frequency is rejected by selective circuits. The audio-frequency signal is obtained at the detector. Code signals are made audible by heterodyne reception at the detector stage; this oscillator is called the "beat-frequency oscillator" or BFO. Block diagrams of typical single- and double-conversion receivers are shown in Fig. 8-12.

As a numerical example, assume that an intermediate frequency of 455 kHz is chosen and that the incoming signal is at 7000 kHz. Then the high-frequency oscillator frequency may be set to 7455 kHz in order that one side frequency (7455 minus 7000) will be at 455 kHz. The high-frequency oscillator could also be set to 6545 kHz and give the same difference frequency. To produce an audible code signal at the detector of, say, 1000 Hz, the heterodyning oscillator would be set to either 454 or 456 kHz.

The frequency-conversion process permits rf amplification at a relatively low frequency, the i-f. High selectivity and gain can be obtained at this frequency, and this selectivity and gain are constant. The separate oscillators can be designed for good stability and, since they are working at frequencies considerably removed from the signal frequencies, they are not normally "pulled" by the incoming signal.

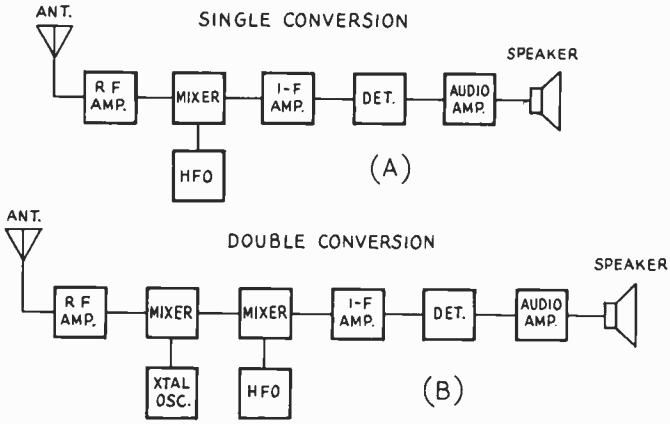

Fig. 8-12 — Block diagrams of a (A) single- and (B) double-conversion superheterodyne receiver.

Images

Each hf oscillator frequency will cause i-f response at two signal frequencies, one higher and one lower than the oscillator frequency. If the oscillator is set to 7455 kHz to tune to a 7000-kHz signal, for example, the receiver can respond also to a signal on 7910 kHz, which likewise gives a 455-kHz beat. The undesired signal is called the image. It can cause unnecessary interference if it isn't eliminated.

The radio-frequency circuits of the receiver (those used before the signal is heterodyned to the i-f) normally are tuned to the desired signal, so that the selectivity of the circuits reduces or eliminates the response to the image signal. The ratio of the receiver voltage output from the desired signal to that from the image is called the signal-to-image ratio, or image ratio.

The image ratio depends upon the selectivity of the rf tuned circuits preceding the mixer tube. Also, the higher the intermediate frequency, the higher the image ratio, since raising the i-f increases the frequency separation between the signal and the image and places the latter further away from the resonance peak of the signal-frequency input circuits.

The Double-Conversion Superheterodyne

At high and very-high frequencies it is difficult to secure an adequate image ratio when the intermediate frequency is of the order of 455 kHz. To reduce image response the signal frequently is converted first to a rather high (1500, 5000, or even 10,000 kHz) intermediate frequency, and then – sometimes after further amplification – converted to a lower i-f where higher adjacent-channel selectivity can be obtained. Such a receiver is called a double-conversion superheterodyne (Fig. 8-12B).

Other Spurious Responses

In addition to images, other signals to which the receiver is not tuned may be heard. Harmonics of the high-frequency oscillator may beat with signals far removed from the desired frequency to produce output at the intermediate frequency; such spurious responses can be reduced by adequate selectivity *before* the mixer stage, and by using sufficient shielding to prevent signal pickup by any means other than the antenna. When a strong signal is received, the harmonics generated by rectification in the detector may, by stray coupling, be introduced into the rf or mixer circuit and converted to the intermediate frequency, to go through the receiver in the same way as an ordinary signal. These "birdies" appear as a heterodyne beat on the desired signal, and are principally bothersome when the frequency of the incoming signal is not greatly different from the intermediate frequency. The cure is proper circuit isolation and shielding.

Harmonics of the beat oscillator also may be converted in similar fashion and amplified through the receiver; these responses can be reduced by shielding the beat oscillator and by careful mechanical design.

MIXER PRODUCTS

Additional spurious products are generated during the mixing process, and these products are the most troublesome of all, as it is difficult indeed to eliminate them unless the frequencies chosen for the mixing scheme are changed. The tables and chart given in Fig. 8-13 will aid in the choice of spurious-free frequency combinations, and they can be used to determine how receiver "birdies" are being generated. Only mixer products that fall close to the desired frequency are considered, as they are the ones that normally cause trouble. The horizontal axis of the chart is marked off in steps from 3 to 20, and the vertical axes from 0 to 14. These numbers can be taken to mean either kilohertz or megahertz, depending on the frequency range used. Both axes must use the same reference; one cannot be in kHz and the other in MHz.

Spurious Response Chart

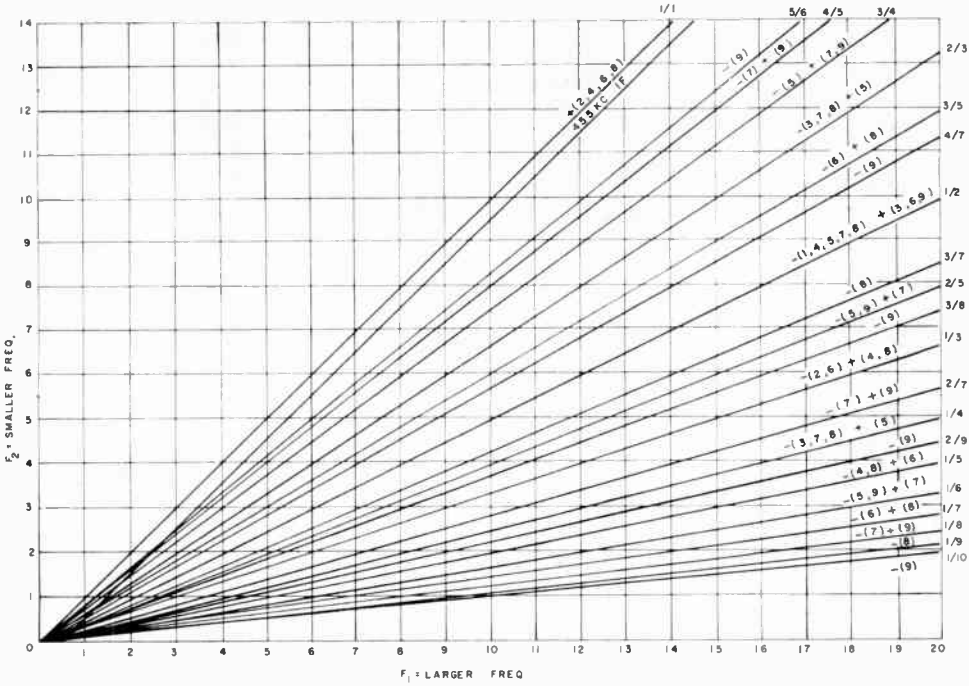

TABLE 1

ORDER	1	2	3	4	5	6	7	8	9
		F2 ~ F1							
1/1		•2 0 •0 2		•1 3 •3 1		•2 4 •4 2		•3 5 •5 3	
1/2	10		•1 2 •2 0	31	32	•3 5 •5 1	52	53	•5 4 •7 2
1/3		20		•2 2 •4 0		42 51		•5 3 •7 1	
1/4			30		•3 2 •5 0		52	71	
1/5				40		•4 2 •6 0		62	
1/6					50		•5 2 •7 0		72
1/7						60		•6 2 •8 0	
1/8							70		•7 2 •9 0
1/9								80	
1/10									90
2/3			21		•2 3 •4 1		43	53	

TABLE 2

ORDER	1	2	3	4	5	6	7	8	9
				F2 ~ F1					
2/5				41			•4 3 •6 1		63
2/7							61		•6 3 •8 1
2/9									81
3/4					32		•3 4 •5 2		54
3/5						42		•4 4 •6 2	
3/7								62	
3/8									72
4/5							43		•4 5 •6 3
4/7									63
5/6									54

• INDICATES SUM MIXING
OTHER ~ DIFF MIXING

Reprinted with permission of Collins Radio

Fig. 8-13 — Chart to aid in the calculation of spurious frequencies generated during the mixing process.

To demonstrate the use of the chart, suppose an amateur wanted to mix a 6- to 6.5-MHz VFO output with a 10-MHz ssb signal to obtain output in the 80-meter band (the same problem as with a receiver that tunes 3.5 to 4 MHz, using a 6- to 6.5-MHz VFO to heterodyne to a 10-MHz i-f). Thus, F1 is 10 MHz and F2 is 6 to 6.5 MHz. Examination of the chart shows the intersection of these frequencies to be near the lines marked 2/3 and 3/5. In the case of the transmitter, difference (subtractive) mixing is to be used. The order of the products that will be close to the desired mixer output frequency is given on each line in parentheses. A plus sign in front of the parentheses indicates the product order in a sum (additive) mix, and a minus sign the order of a difference mix. For this example, the chart indicates the 3rd-, 7th-, and 8th-order products in a 2/3 relationship are going to be near the 80-meter band, plus the 6th-order product of the 3/5 relationship.

The exact frequencies of these products can be found with the help of the two small tables in Fig. 8-13. The product orders from 1 to 9 are given for all the product lines on the chart. The first digit of each group in a box is the harmonic of the lower frequency, F2, and the second digit is the harmonic of the larger frequency, F1. The dot indicates sum mixing and no dot indicates products in a difference mix. In the example, the chart shows that the 2/3 relationship will yield a 3rd-order product 2F2-F1, a 7th-order product 4F2-3F1, and an 8th-order product 5F2-3F1.

(Continued on next page)

(2 X 6) — 10 = 2
(2 X 6.5) — 10 = 3 (3rd order)

(4 X 6) — (3 X 10) =-6
(4 X 6.5) — (3 X 10) =-4 (7th order)

(5 X 6) — (3 X 10) = 0
(5 X 6.5) — (3 X 10) = 2.5 (8th order)

The 3/4 relationship produces a 6th-order product 4F2-2F1.

(4 X 6) — (2 X 10) = 4
(4 X 6.5) — (2 X 10) = 6

Thus, the ranges of spurious signals near the desired output band are 2 to 3 MHz, 6 to 4 MHz, 0 to 2.5 MHz, and 4 to 6 MHz. The negative sign indicates that the 7th-order product moves in the opposite direction to the normal output frequency, as the VFO is tuned. In this example proper mixer operation and sufficient selectivity following the mixer should keep the unwanted products sufficiently down in level without the use of filters or traps. Even-order products can be reduced by employing a balanced or doubly balanced mixer circuit, such as shown in Fig. 8-16.

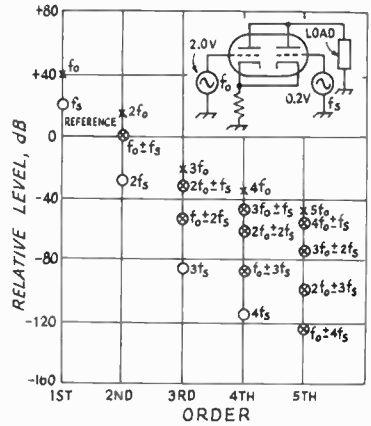

Fig. 8-14 — Chart showing the relative levels of spurious signals generated by a 12AU7A mixer.

The level of spurious products to be found in the output of a 12AU7 have been calculated by V. W. Bolie, using the assumption that the oscillator injection voltage will be 10 times (20 dB) greater than the input signal. This information is given in Fig. 8-14 for 1st- to 5th-order products. It is evident from the chart that multiples of the oscillator voltage produce the strongest of the undesired products. Thus, it follows that using a balanced-mixer design which reduces the level of oscillator signal in the output circuit will decrease the strength of the unwanted products.

MIXERS

A circuit tuned to the output frequency is placed in the plate circuit of the mixer, to offer a high impedance load for the output current that is developed. The signal- and oscillator-frequency voltages appearing in the plate circuit are rejected by the selectivity of this circuit. The output tuned circuit should have low impedance for these frequencies, a condition easily met if neither is close to the output frequency.

The conversion efficiency of the mixer is the ratio of output voltage from the plate circuit to rf signal voltage applied to the grid. High conversion efficiency is desirable. The device used as a mixer also should be low noise if a good signal-to-noise ratio is wanted, particularly if the mixer is the first active device in the receiver.

A change in oscillator frequency caused by tuning of the mixer grid circuit is called pulling. Pulling should be minimized, because the stability of the whole receiver or transmitter depends critically upon the stability of the hf oscillator. Pulling decreases with separation of the signal and hf-oscillator frequencies, being less with higher output frequencies. Another type of pulling is caused by lack of regulation in the power supply. Strong signals cause the voltage to change, which in turn shifts the oscillator frequency.

Circuits

If the mixer and high-frequency oscillator are separate tubes or transistors, the converter portion is called a "mixer." If the two are combined in one tube envelope (as is often done for reasons of economy or efficiency), the stage is called a "converter." In either case the function is the same.

Typical mixer circuits are shown in Figs. 8-15 and 8-16. The variations are chiefly in the way in which the oscillator voltage is introduced. In 8-15A, a pentode functions as a plate detector at the output frequency; the oscillator voltage is capacitance-coupled to the grid of the tube through C2. Inductive coupling may be used instead. The conversion gain and input selectivity generally are good, so long as the sum of the two voltages (signal and oscillator) impressed on the mixer grid does not exceed the grid bias. It is desirable to make the oscillator voltage as high as possible without exceeding this limitation. The oscillator power required is negligible. The circuit is a sensitive one and makes a good mixer, particularly with high-transconductance tubes like the 6CY5, 6EJ7 or 6U8A (pentode section). Triode tubes can be used as mixers in grid-injection circuits, but they are commonly used at 50 MHz and higher, where mixer noise may become a significant factor. The triode mixer has the lowest inherent noise, the pentode is next, and the multigrid converter tubes are the noisiest.

In the circuit of Fig. 8-15A the oscillator voltage could be introduced at the cathode rather than at the control grid. If this were done, C3 would have to be removed, and output from the oscillator would be coupled to the cathode of the mixer through a .001-μF capacitor. C2 would also be discarded. Generally, the same rules apply as when the tube uses grid injection.

It is difficult to avoid "pulling" in a triode or pentode mixer, and a pentagrid mixer tube

provides much better isolation. A typical circuit is shown in Fig. 8-15B, and tubes like the 6BA7 or 6BE6 are commonly used. The oscillator voltage is introduced through an "injection" grid. Measurement of the rectified current flowing in R2 is used as a check for proper oscillator-voltage amplitude. Tuning of the signal-grid circuit can have little effect on the oscillator frequency because the injection grid is isolated from the signal grid by a screen grid that is at rf ground potential. The pentagrid mixer is much noisier than a triode or pentode mixer, but its isolating characteristics make it a very useful device.

Penagrid tubes like the 6BE6 or 6BA7 are somtimes used as "converters" performing the dual function of mixer and oscillator. The usual circuit resembles Fig. 8-15B except that the No. 1 grid connects to the top of a grounded parallel-tuned circuit by means of a larger grid-blocking capacitor, and the cathode (without R1 and C3) connects to a tap near the grounded end of the coil. This forms a Hartley oscillator circuit. Correct location of the cathode tap is indicated by the grid current; raising the tap increases the grid current because the strength of oscillation is increased.

The effectiveness of converter tubes of the type just described becomes less as the signal frequency is increased. Some oscillator voltage will be coupled to the signal grid through "space-charge" coupling, an effect that increases with frequency. If there is relatively little frequency difference between oscillator and signal, as for example a 14- or 28-MHz signal and an i-f of 455 kHz, this voltage can become considerable because the selectivity of the signal circuit will be unable to reject it. If the signal grid is not returned directly to ground, but instead is returned through a resistor or part of an agc system, considerable bias can be developed which will cut down the gain. For this reason, and to reduce image response, the i-f following the first converter of a receiver should be not less than 5 or 10 percent of the signal frequency.

Diodes, FETs, ICs, and bipolar transistors can be used as mixers. Examples are given in Figs. 8-15 and 8-16. A single-diode mixer is not shown here since its application is usually limited to circuits operating in the uhf region and higher. A discussion of diode mixers, plus a typical circuit, is given in Chapter 9.

Oscillator injection can be fed to the base or emitter elements of bipolar-transistor mixers, Fig. 8-15C. If emitter injection is used, the usual emitter bypass capacitor must be removed. Because the dynamic characteristics of bipolar transistors prevent them from handling high signal levels, FETs are usually preferred in mixer circuits, although they do not provide the high conversion gain available with bipolar mixers. FETs (Fig. 8-15D and E) have greater immunity to cross-modulation and overload than bipolar transistors, and offer nearly square-law performance. The circuit at D uses a junction FET, N-channel type, with oscillator injection being supplied to the source. The value of the source resistor should be adjusted to provide a bias of approximately 0.8 volts. This value offers a good compromise between conversion gain and good intermodulation-distortion characteristics. At this bias level a local-oscillator injection of approximately 1.5 volts is desirable for good conversion gain. The lower the oscillator-injection level, the lower the gain. High injection levels improve the mixers immunity to cross-modulation.

A dual-gate MOSFET is used as a mixer at E. Gate 2 is used for injecting the local-oscillator signal while gate 1 is supplied with signal voltage.

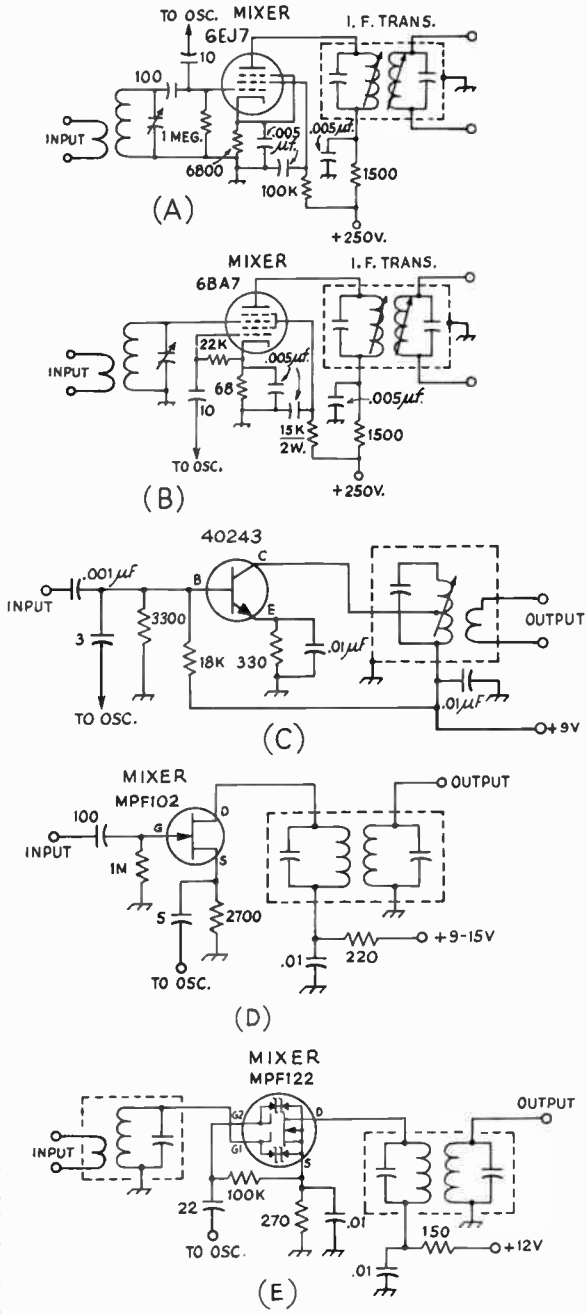

Fig. 8-15 – Typical single-ended mixer circuits.

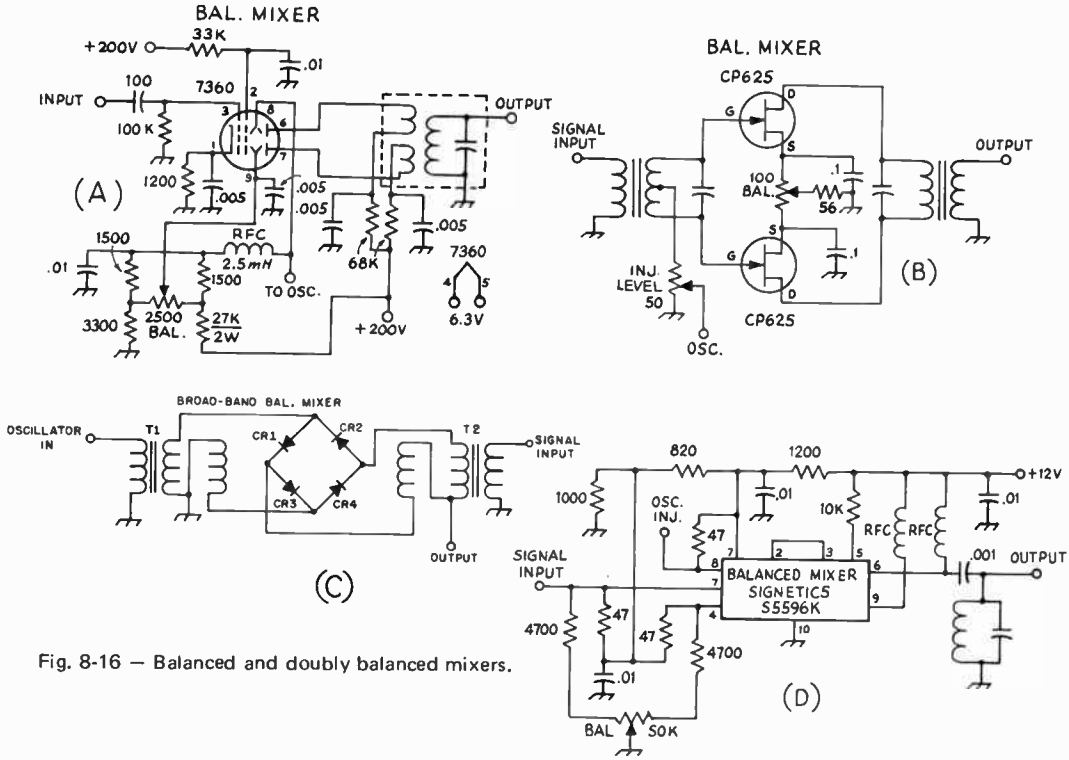

Fig. 8-16 — Balanced and doubly balanced mixers.

This type of mixer has excellent immunity to cross-modulation and overload. It offers better isolation between the oscillator and input stages than is possible with a JFET mixer. The mixers at D and E have high-Z input terminals, while the circuit at C has a relatively low-Z input impedance. The latter requires tapping the base down on the input tuned circuit for a suitable impedance match.

BALANCED MIXERS

The level of input and spurious signals contained in the output of a mixer may be decreased by using a balanced or doubly balanced circuit. The balanced mixer reduces leakthrough and even-order harmonics of one input (usually the local oscillator) while the doubly balanced designs lower the level of spurious signals caused by both the signal and oscillator inputs. One type of balanced mixer uses a 7360 beam-deflection tube, connected as shown in Fig. 8-16A. The signal is introduced at the No. 1 grid, to modulate the electron stream running from cathode to plates. The beam is deflected from one plate to the other and back again by the BFO voltage applied to one of the deflection plates. (If oscillator radiation is a problem, push-pull deflection by both deflection plates should be used.) At B, two CP625 FETs are used; these devices have a large dynamic range, about 130 dB, making them an excellent choice for either a transmitting or receiving mixer. Dc balance is set with a control in the source leads. The oscillator energy is introduced at the center tap of the input transformer.

In the circuit of Fig. 8-16C, hot-carrier diodes are employed as a broad-band balanced mixer. With careful winding of the toroid-core input and output transformers, the inherent balance of the mixer will provide 40- to 50-dB attenuation of the oscillator signal. The transformers, T1 and T2, having trifilar windings – using No. 32 enamel wire, 12 turns on a 1/2-inch core will provide operation on any frequency between 500 kHz and 100 MHz. Using Q3 cores the upper-frequency range can be extended to 300 MHz. CR1 to CR4, inc, comprise a matched quad of Hewlett-Packard HPA 5082-2805 diodes. Conversion loss in the mixer will be 6 to 8 dB.

Special doubly balanced mixer ICs are now available which can simplify circuit construction, as special balanced transformers are not required. Also, the ICs produce high conversion gain. A typical circuit using the Signetics S5596K is shown in Fig. 8-16D. The upper frequency limit of this device is approximately 130 MHz.

THE HIGH-FREQUENCY OSCILLATOR

Stability of the receiver is dependent chiefly upon the stability of the tunable hf oscillator, and particular care should be given this part of the receiver. The frequency of oscillation should be insensitive to mechanical shock and changes in voltage and loading. Thermal effects (slow change in frequency because of tube, transistor, or circuit heating) should be minimized. See Chapter 6 for sample circuits and construction details.

THE INTERMEDIATE-FREQUENCY AMPLIFIER

One major advantage of the superhet is that high gain and selectivity can be obtained by using a good i-f amplifier. This can be a one-stage affair in simple receivers, or two or three stages in the more elaborate sets.

Choice of Frequency

The selection of an intermediate frequency is a compromise between conflicting factors. The lower the i-f, the higher the selectivity and gain, but a low i-f brings the image nearer the desired signal and hence decreases the image ratio. A low i-f also increases pulling of the oscillator frequency. On the other hand, a high i-f is beneficial to both image ratio and pulling, but the gain is lowered and selectivity is harder to obtain by simple means.

An i-f of the order of 455 kHz gives good selectivity and is satisfactory from the standpoint of image ratio and oscillator pulling at frequencies up to 7 MHz. The image ratio is poor at 14 MHz when the mixer is connected to the antenna, but adequate when there is a tuned rf amplifier between antenna and mixer. At 28 MHz and on the very high frequencies, the image ratio is very poor unless several rf stages are used. Above 14 MHz, pulling is likely to be bad without very loose coupling between mixer and oscillator. Tuned-circuit shielding also helps.

With an i-f of about 1600 kHz, satisfactory image ratios can be secured on 14, 21 and 28 MHz with one rf stage of good design. For frequencies of 28 MHz and higher, a common solution is to use double conversion, choosing one high i-f for image reduction (5 and 10 MHz are frequently used) and a lower one for gain and selectivity.

In choosing an i-f it is wise to avoid frequencies on which there is considerable activity by the various radio services, since such signals may be picked up directly by the i-f wiring. Shifting the i-f or better shielding are the solutions to this interference problem.

Fidelity; Sideband Cutting

Amplitude modulation of a carrier generates sideband frequencies numerically equal to the carrier frequency plus and minus the modulation frequencies present. If the receiver is to give a faithful reproduction of modulation that contains, for instance, audio frequencies up to 5000 Hz, it must at least be capable of amplifying equally all frequencies contained in a band extending from 5000 Hz above or below the carrier frequency. In a superheterodyne, where all carrier frequencies are changed to the fixed intermediate frequency, the i-f amplification must be uniform over a band 5-kHz wide, when the carrier is set at one edge. If the carrier is set in the center, at 10-kHz band is required. The signal-frequency circuits usually do not have enough overall selectivity to affect materially the "adjacent-channel" selectivity, so that only the i-f-amplifier selectivity need be considered.

If the selectivity is too great to permit uniform amplification over the band of frequencies occupied by the modulated signal, some of the sidebands are "cut." While sideband cutting reduces fidelity, it is frequently preferable to sacrifice naturalness of reproduction in favor of communications effectiveness.

The selectivity of an i-f-amplifier, and hence the tendency to cut sidebands increases with the number of tuned circuits and also is greater the lower the intermediate frequency. From the standpoint of communication, sideband cutting is never serious with two-stage amplifiers at frequencies as low as 455 kHz. A two-stage i-f-amplifier at 85 or 100 kHz will be sharp enough to cut some of the higher frequency sidebands, if good transformers are used. However, the cutting is not at all serious, and the gain in selectivity is worthwhile in crowded amateur bands as an aid to QRM reduction.

Circuits

I-f amplifiers usually consist of one or more stages. The more stages employed, the greater the selectivity and overall gain of the system. In double-conversion receivers there is usually one stage at the first i-f, and sometimes as many as three or four stages at the second, or last, i-f. Most single-conversion receivers use no more than three stages of i-f amplification.

A typical vacuum-tube i-f stage is shown in Fig. 8-17 at A. The second or third stages would simply be duplicates of the stage shown. Remote cutoff pentodes are almost always used for i-f amplifiers, and such tubes are operated as Class-A amplifiers. For maximum selectivity, double-tuned transformers are used for interstage coupling, though single-tuned inductors and capacitive coupling can be used, but at a marked reduction in selectivity.

Agc voltage can be used to reduce the gain of the stage, or stages, by applying it to the terminal marked AGC. The agc voltage should be negative. Manual control of the gain can be effected by lifting the 100-ohm cathode resistor from ground and inserting a potentiometer between it and ground. A 10,000-ohm control can be used for this purpose. A small amount of B-plus voltage can be fed through a dropping resistor (about 56,000 ohms from a 250-volt bus) to the junction of the gain control and the 100-ohm cathode resistor to provide an increase in tube bias in turn reducing the mutual conduction of the tube for gain reduction.

An integrated-circuit i-f amplifier is shown at B. A positive-polarity agc voltage is required for this circuit to control the stage gain. If manual gain control provisions are desired, a potentiometer can be used to vary the plus voltage to the agc terminal of the IC. The control would be connected between the 9-volt bus and ground, its movable contact wired to the agc terminal of the IC.

A dual-gate MOSFET i-f amplifier is shown at B. Application of negative voltage to gate 2 of the

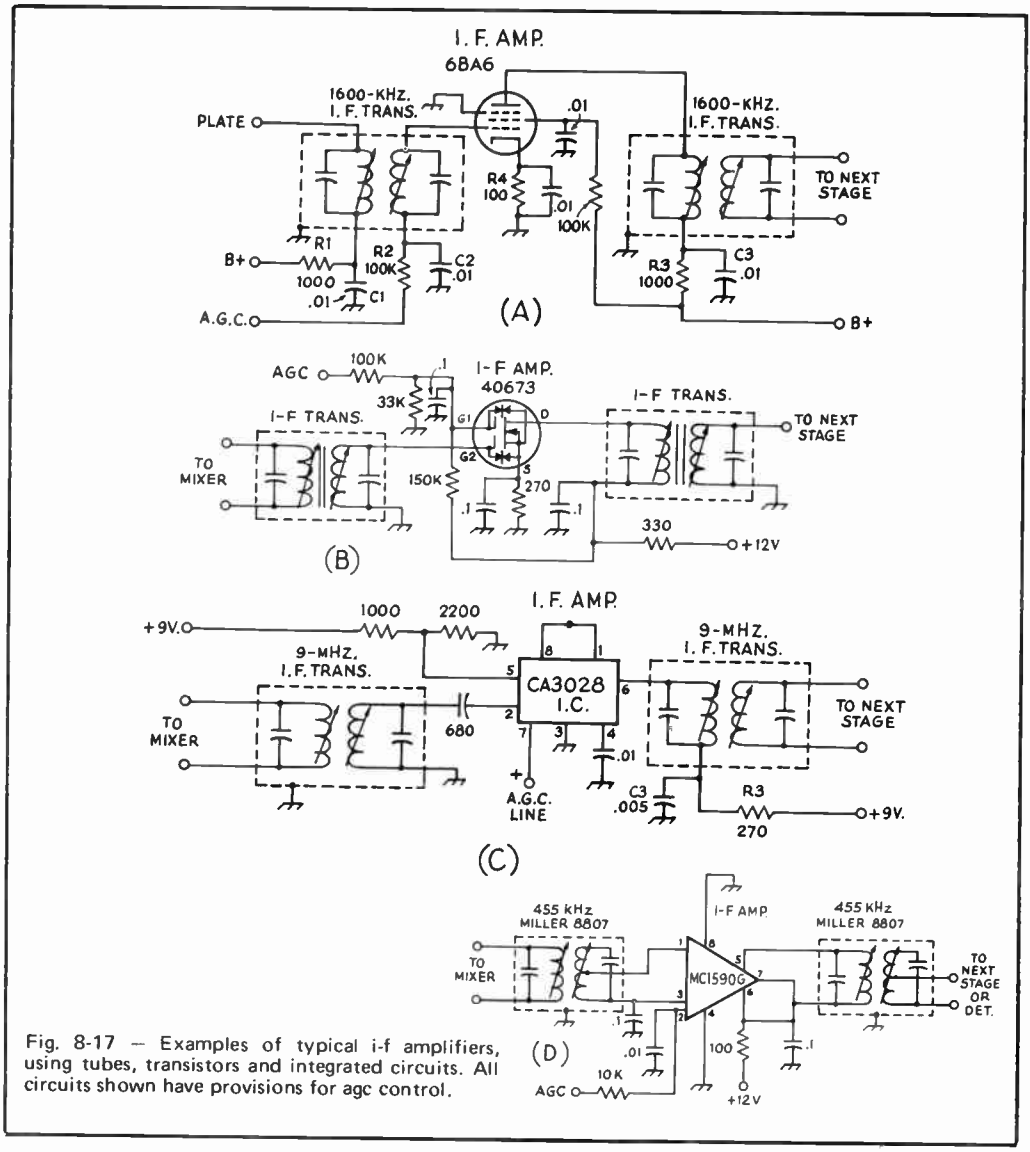

Fig. 8-17 — Examples of typical i-f amplifiers, using tubes, transistors and integrated circuits. All circuits shown have provisions for agc control.

device reduces the gain of the stage. To realize maximum gain when no agc voltage is present, it is necessary to apply approximately 3 volts of positive dc to gate 2. Neutralization is usually not required with a MOSFET in i-f amplifiers operating up to 20 MHz. Should instability occur, however, gate 1 and the drain may be tapped down on the i-f transformer windings.

High-gain linear ICs have been developed specifically for use as receiver i-f amplifiers. A typical circuit which uses the Motorola MC1590G is shown at D; 70 dB of gain may be achieved using this device. Agc characteristics of the IC are excellent. A 4-volt change at the agc terminal produces 60-dB change in the gain of the stage. Agc action starts at 5 volts, so a positive agc system with a fixed dc level must be employed.

Tubes for I-f Amplifiers

Variable-μ (remote cutoff) pentodes are almost invariably used in i-f amplifier stages, since grid-bias gain control is practically always applied to the i-f amplifier. Tubes with high plate resistance will have least effect on the selectivity of the amplifier, and those with high mutual conductance will give greatest gain. The choice of i-f tubes normally has no effect on the signal-to-noise ratio, since this is determined by the preceding mixer and rf amplifier.

The 6BA6, 6BJ6 and 6BZ6 are recommended for i-f work because they have desirable remote cutoff characteristics.

When two or more stages are used the high gain may tend to cause troublesome instability and oscillation, so that good shielding, bypassing, and

careful circuit arrangement to prevent stray coupling between input and output circuits are necessary.

When vacuum tubes are used, the plate and grid leads should be well separated. When transistors are used, the base and collector circuits should be well isolated. With tubes it is advisable to mount the screen-bypass capacitor directly on the bottom of the socket, crosswise between the plate and grid pins, to provide additional shielding. As a further precaution against capacitive coupling, the grid and plate leads should be "dressed" close to the chassis.

I-f Transformers

The tuned circuits of i-f amplifiers are built up as transformer units consisting of a metal shield container in which the coils and tuning capacitors are mounted. Both air-core and powered-iron-core universal-wound coils are used, the latter having somewhat higher *Q*s and hence greater selectivity and gain. In universal windings the coil is wound in layers with each turn traversing the length of the coil, back and forth, rather than being wound perpendicular to the axis as in ordinary single-layer coils. In a straight multilayer winding, a fairly large capacitance can exist between layers. Universal winding, with its "criss-crossed" turns, tends to reduce distributed-capacitance effects.

For tuning, air-dielectric tuning capacitors are preferable to mica compression types because their capacitance is practically unaffected by changes in temperature and humidity. Iron-core transformers may be tuned by varying the inductance (permeability tuning), in which case stability comparable to that of variable air-capacitor tuning can be obtained by use of high-stability fixed mica or ceramic capacitors. Such stability is of great importance, since a circuit whose frequency "drifts" with time eventually will be tuned to a different frequency than the other circuits, thereby reducing the gain and selectivity of the amplifier.

The normal interstage i-f transformer is loosely coupled, to give good selectivity consistent with adequate gain. A so-called diode transformer is similar, but the coupling is tighter, to give sufficient transfer when working into the finite load presented by a diode detector. Using a diode transformer in place of an interstage transformer would result in loss of selectivity; using an interstage transformer to couple to the diode would result in loss of gain.

Besides the conventional i-f transformers just mentioned, special units to give desired selectivity characteristics have been used. For higher-than-ordinary adjacent-channel selectivity, triple-tuned transformers, with a third tuned circuit inserted between the input and output windings, have been made. The energy is transferred from the input to the output windings via this tertiary winding, thus adding its selectivity to the over-all selectivity of the transformer.

Selectivity

The overall selectivity of the i-f amplifier will depend on the frequency and the number of stages. The following figures are indicative of the bandwidths to be expected with good-quality circuits in amplifiers so constructed as to keep regeneration at a minimum:

Tuned Ckts.	*Freq.*	*Circuit Q*	*Bandwidth, kHz* −6 dB	−20 dB	−60 dB
4	50 kHz	60	0.5	0.95	2.16
4	455 kHz	75	3.6	6.9	16
6	1600 kHz	90	8.2	15	34

THE BEAT OSCILLATOR AND DETECTOR

The detector in a superheterodyne receiver functions the same way as do the simple detectors described earlier in this chapter (Fig. 8-4), but usually operates at a higher input level because of the amplification ahead of it. The detectors of Fig. 8-4 are satisfactory for the reception of a-m signals. When copying cw and ssb signals it becomes necessary to supply a beat-oscillator (BFO) signal to the detector stage as described in the earlier section on product detectors. Suitable circuits for variable-frequency and crystal-controlled BFOs are given in Chapter 6.

AUTOMATIC GAIN CONTROL

Automatic regulation of the gain of the receiver in inverse proportion to the signal strength is an operating convenience in phone reception, since it tends to keep the output level of the receiver constant regardless of input-signal strength. The average rectified dc voltage, developed by the received signal across a resistance in a detector circuit, is used to vary the bias on the rf and i-f amplifier stages. Since this voltage is proportional to the average amplitude of the signal, the gain is reduced as the signal strength becomes greater. The control will be more complete and the output more constant as the number of stages to which the agc bias is applied is increased. Control of at least two stages is advisable.

Carrier-Derived Circuits

A basic diode-detector/agc-rectifier circuit is given at Fig. 8-18A. Here a single germanium diode serves both as a detector and an agc rectifier, producing a negative-polarity agc voltage. Audio is taken from the return end of the i-f transformer secondary and is filtered by means of a 47,000-ohm resistor and two 470-pF capacitors.

At B, CR1 (also a germanium diode) functions as a detector while CR2 (germanium) operates as an agc rectifier. CR2 furnishes a negative agc voltage to the controlled stages of the receiver. Though solid-stage rectifiers are shown at A and B, vacuum-tube diodes can be used in these circuits. A 6AL5 tube is commonly used in circuits calling for two diodes (B), but a 1-megohm resistor should be shunted across the right-hand diode if a tube is used.

The circuit at C shows a typical hookup for agc feed to the controlled stages. S1 can be used to disable the agc when this is desired. For tube and FET circuits the value of R1 and R2 can be 100,000 ohms, and R3 can be 470,000 ohms. If bipolar transistors are used for the rf and i-f stages being controlled, R1 and R2 will usually be

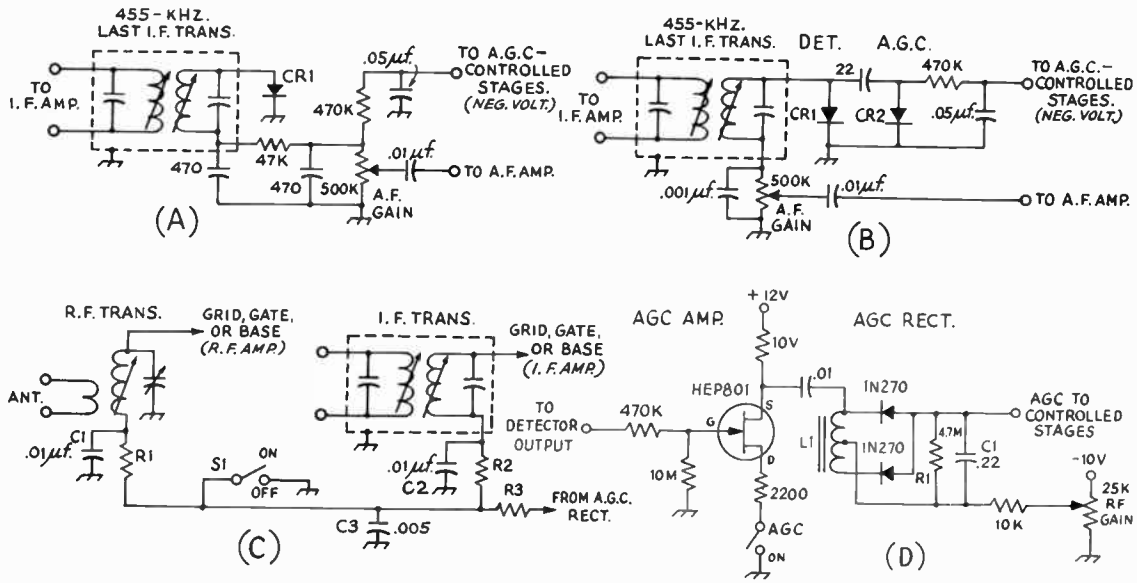

Fig. 8-18 — Methods for obtaining rectified voltage. At A the detector furnishes agc voltage. B shows separate diodes being used for the detector and agc circuits. C illustrates how negative agc voltage is fed to the rf and i-f stages of a typical receiver. D shows an audio-derived agc scheme. S1 is used to disable the agc when desired. R1, R2 and R3 in combination with C1, C2, and C3, are used for rf decoupling. Their values are dependent upon the device being used — tube or transistor. CR1 and CR2 at A and B are germanium diodes.

between 1000 and 10,000 ohms, depending upon the bias network required for the transistors used. R3 will also be determined by the bias value required in the circuit.

Agc Time Constant

The time constant of the resistor-capacitor combinations in the agc circuit is an important part of the system. It must be long enough so that the modulation on the signal is completely filtered from the dc output, leaving only an average dc component which follows the relatively slow carrier variations with fading. Audio-frequency variations in the agc voltage applied to the amplifier grids would reduce the percentage of modulation on the incoming signal. But the time constant must not be too long or the agc will be unable to follow rapid fading. The capacitance and resistance values indicated in 8-18A will give a time constant that is satisfactory for average reception.

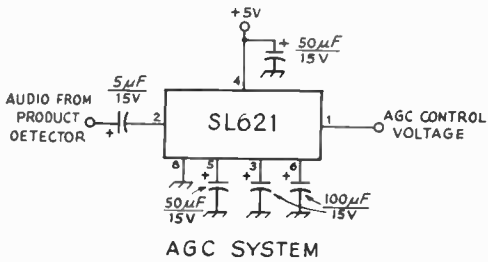

Fig. 8-19 — An IC agc system.

Cw and Ssb

Agc can be used for cw and ssb reception but the circuit is usually more complicated. The agc voltage must be derived from a rectifier that is isolated from the beat-frequency oscillator (otherwise the rectified BFO voltage will reduce the receiver gain even with no signal coming through). This is done by using a separate agc channel connected to an i-f amplifier stage ahead of the second detector (and BFO) or by rectifying the audio output of the detector. If the selectivity ahead of the agc rectifier isn't good, strong adjacent-channel signals may develop agc voltages that will reduce the receiver gain. When clear channels are available, however, cw and ssb agc will hold the receiver output constant over a wide range of signal inputs. Agc systems designed to work on these signals should have fast-attack and slow-decay characteristics to work satisfactorily, and often a selection of time constants is made available.

Audio-Derived Agc

Agc potential for use in a cw/ssb receiver may also be obtained by sampling the audio output of the detector and rectifying this signal. A typical circuit is shown in Fig. 8-18D. The JFET stage amplifies the audio signal; the output of the HEP801 is coupled to the secondary of an audio transformer, L1. The time constant of the agc line is established by R1C1. Manual gain control can be accomplished by adding a variable negative voltage to the common lead of the audio rectifier.

An improved audio-derived agc circuit is shown in Fig. 8-19, using the Plessey Microelectronics SL-621 integrated circuit. This design provides the fast-attack, slow-decay time constant required for ssb reception. High-level pulse signals that might "hang up" the agc system are sampled by the IC input circuit, activating a trigger which provides a fast-discharge path for the time-constant capacitor. Thus, noise bursts will not produce a change in the level of agc output voltage.

NOISE REDUCTION

Types of Noise

In addition to tube and circuit noise, much of the noise interference experienced in reception of high-frequency signals is caused by domestic or industrial electrical equipment and by automobile ignition systems. The interference is of two types in its effects. The first is the "hiss" type, consisting of overlapping pulses similar in nature to the receiver noise. It is largely reduced by high selectivity in the receiver, especially for code reception. The second is the "pistol-shot" or "machine-gun" type, consisting of separated impulses of high amplitude. The "hiss" type of interference usually is caused by commutator sparking in dc and series-wound ac motors, while the "shot" type results from separated spark discharges (ac power leaks, switch and key clicks, ignition sparks, and the like).

The only known approach to reducing tube and circuit noise is through the choice of low-noise front-end active components and through more overall selectivity.

Impulse Noise

Impulse noise, because of the short duration of the pulses compared with the time between them, must have high amplitude to contain much average energy. Hence, noise of this type strong enough to cause much interference generally has an instantaneous amplitude much higher than that of the signal being received. The general principle of devices intended to reduce such noise is to allow the desired signal to pass through the receiver unaffected, but to make the receiver inoperative for amplitudes greater than that of the signal. The greater the amplitude of the pulse compared with its time of duration, the more successful the noise reduction.

Another approach is to "silence" (render inoperative) the receiver during the short duration time of any individual pulse. The listener will not hear the "hole" because of its short duration, and very effective noise reduction is obtained. Such devices are called "blankers" rather than "limiters."

In passing through selective receiver circuits, the time duration of the impulses is increased, because of the Q of the circuits. Thus, the more selectivity ahead of the noise-reducing device, the more difficult it becomes to secure good pulse-type noise suppression. See Fig. 8-22.

Audio Limiting

A considerable degree of noise reduction in code reception can be accomplished by amplitude-limiting arrangements applied to the audio-output circuit of a receiver. Such limiters also maintain the signal output nearly constant during fading. These output-limiter systems are simple, and they are readily adaptable to most receivers without any modification of the receiver itself. However, they cannot prevent noise peaks from overloading previous stages.

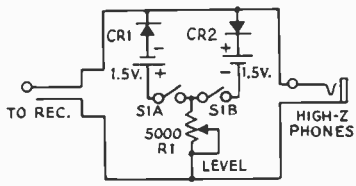

Fig. 8-20 — Circuit of a simple audio limiter/clipper. It can be plugged into the headphone jack of the receiver. R1 sets the bias on the diodes, CR1 and CR2, for the desired limiting level. S1 opens the battery leads when the circuit is not being used. The diodes can be 1N34As or similar.

NOISE-LIMITER CIRCUITS

Pulse-type noise can be eliminated to an extent which makes the reception of even the weakest of signals possible. The noise pulses can be clipped, or limited in amplitude, at either an rf or af point in the receiver circuit. Both methods are used by receiver manufacturers; both are effective.

A simple audio noise limiter is shown at Fig. 8-20. It can be plugged into the headphone jack of the receiver and a pair of headphones connected to the output of the limiter. CR1 and CR2 are wired to clip both the positive and negative peaks of the audio signal, thus removing the high spikes of pulse noise. The diodes are back-biased by 1.5-volt batteries to permit R1 to serve as a clipping-level control. This circuit also limits the amount of audio reaching the headphones. When tuning across the band, strong signals will not be ear-shattering and will appear to be the same strength as the weaker ones. S1 is open when the circuit is not in use to prevent battery drain. CR1 and CR2 can be germanium or silicon diodes, but 1N34As are generally used. This circuit is usable only with high-impedance headphones.

The usual practice in communications receivers is to use low-level limiting, Fig. 18-21. The limiting can be carried out at rf or af points in the receiver, as shown. Limiting at rf does not cause poor audio quality as is sometimes experienced when using series or shunt af limiters. The latter limits the normal af signal peaks as well as the noise pulses,

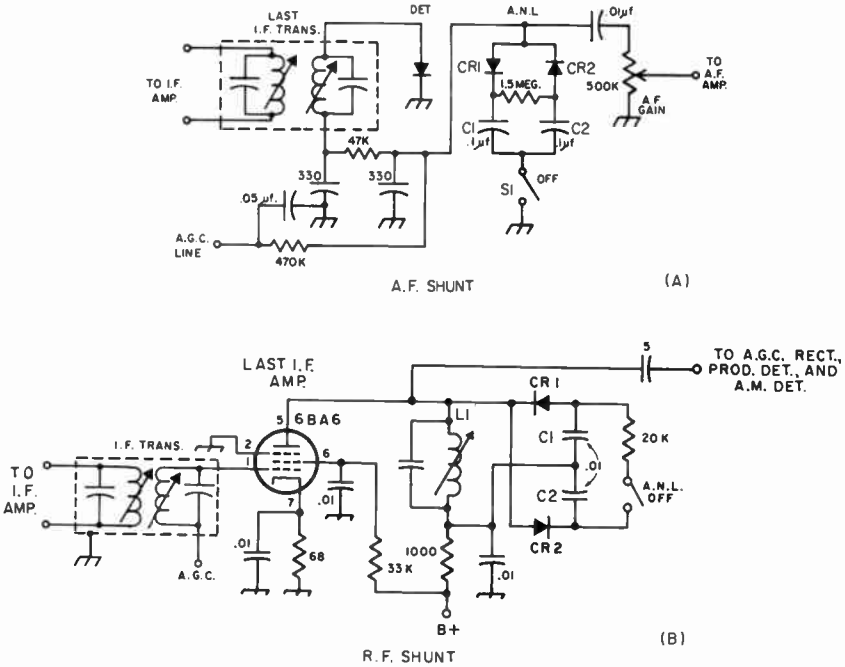

Fig. 8-21 — Typical rf and af anl circuits. A shows the circuit of a self-adjusting af noise limiter. CR1 and CR2 are self-biased silicon diodes which limit both the positive and negative audio and noise-pulse peaks. S1 turns the limiter on or off; B shows an rf limiter of the same type as A, but this circuit clips the positive and negative rf peaks and is connected to the last i-f stage. This circuit does not degrade the audio quality of the signal as does the circuit of A.

(A)

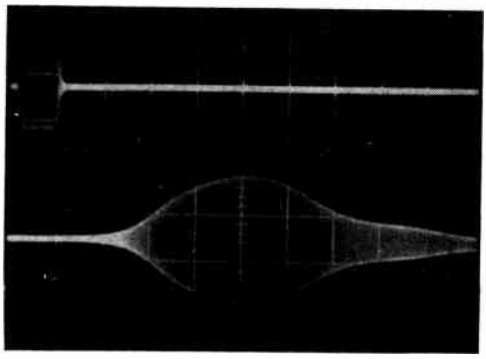

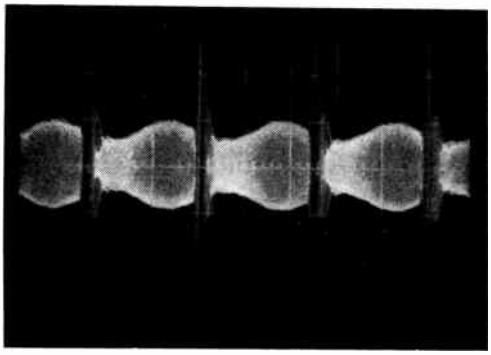

(B)

(C)

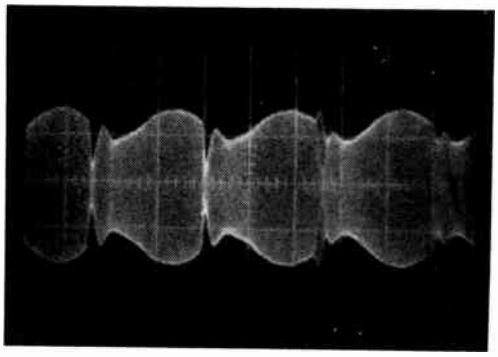

Fig. 8-22 — The delay and lengthening of a noise pulse when passed through a 2-kHz wide amplifier with good skirt selectivity (4 kHz at −60 dB). (B) a 3.75-MHz carrier modulated 30 percent, interfered with by noise pulses. The noise pulses were originally 1000 times the amplitude of the signal; they have been reduced (and lengthened) by overload in the i-f. The i-f bandwidth is 5 kHz. Sweep speed = 1 millisecond/cm. (C) Same as B but with a noise blanker on.

giving an unpleasant audio quality to strong signals.

In a series-limiting circuit, a normally conducting element (or elements) is connected in the circuit in series and operated in such a manner that it becomes nonconductive above a given signal level. In a shunt limiting circuit, a nonconducting element is connected in shunt across the circuit and operated so that it becomes conductive above a given signal level, thus short-circuiting the signal and preventing its being transmitted to the remainder of the amplifier. The usual conducting element will be a forward-biased diode, and the usual nonconducting element will be a back-biased diode. In many applications the value of bias is set manually by the operator; usually the clipping level will be set at about 1 to 10 volts.

The af shunt limiter at A, and the rf shunt limiter at B operate in the same manner. A pair of self-biased diodes are connected across the af line at A, and across an rf inductor at B. When a steady cw signal is present the diodes barely conduct, but when a noise pulse rides in on the incoming signal, it is heavily clipped because capacitors C1 and C2 tend to hold the diode bias constant for the duration of the noise pulse. For this reason the diodes conduct heavily in the presence of noise and maintain a fairly constant signal output level. Considerable clipping of cw signal peaks occurs with this type of limiter, but no apparent deterioration of the signal quality results. L1 at C is tuned to the i-f of the receiver. An i-f transformer with a conventional secondary winding could be used in place of L1, the clipper circuit being connected to the secondary winding; the plate of the 6BA6 would connect to the primary winding in the usual fashion.

I-F NOISE SILENCER

The i-f noise silencer circuit shown in Fig. 8-23 is designed to be used ahead of the high-selectivity section of the receiver. Noise pulses are amplified and rectified, and the resulting negative-going dc pulses are used to cut off an amplifier stage during the pulse. A manual "threshold" control is set by the operator to a level that only permits rectification of the noise pulses that rise above the peak amplitude of the desired signal. The clamp transistor, Q3, short circuits the positive-going pulse "overshoots." Running the 40673 controlled i-f amplifier at zero gate 2 voltage allows the direct application of agc voltage. See July 1971 *QST* for additional details.

SIGNAL-STRENGTH AND TUNING INDICATORS

It is convenient to have some means by which to obtain *relative* readings of signal strength on a communications receiver. The actual meter readings in terms of S units, or decibels above S9, are of little consequence as far as a meaningful report to a distant station is concerned. Few signal-strength meters are accurate in terms of decibels, especially across their entire indicating range. Some manufacturers once established a standard in which a certain number of microvolts were equal to S9 on the meter face. Such calibration is difficult to maintain when a number of different receiver circuits are to be used. At best, a meter can be calibrated for one receiver – the one in which it will be used. Therefore, most S meters are good only as relative indicating instruments for comparing the strength of signals at a given time, on a given amateur band. They are also useful for "on-the-nose-tuning" adjustments with selective receivers. If available, a signal generator with an accurate output attenuator can be used to calibrate an S meter in terms of microvolts, but a different calibration chart will probably be required for each band because of probable differences in receiver sensitivity from band to band. It is helpful to establish a 50-μV reading at midscale on the meter so that the very strong signals will crowd the high end of the meter scale. The weaker signals will then be spread over the lower half of the scale and will not be compressed at the low end. Midscale on the meter can be called S9. If S units are desired across the scale, below S9, a marker can be established at every 6 dB point.

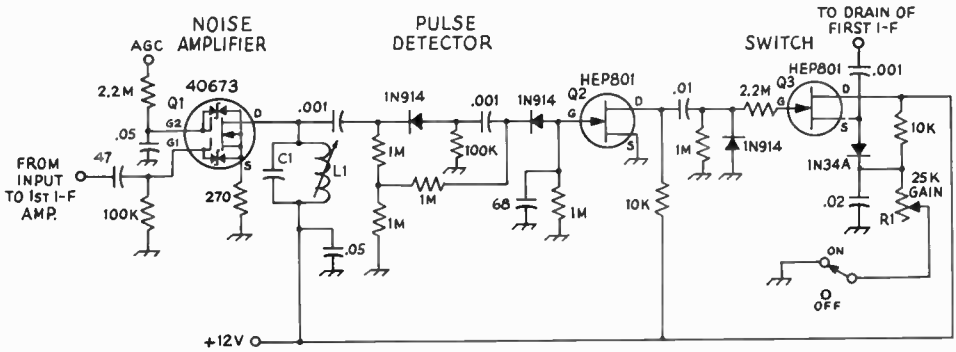

Fig. 8-23 – Diagram of the noise blanker. L1 and C1 are chosen to resonate at the desired i-f.

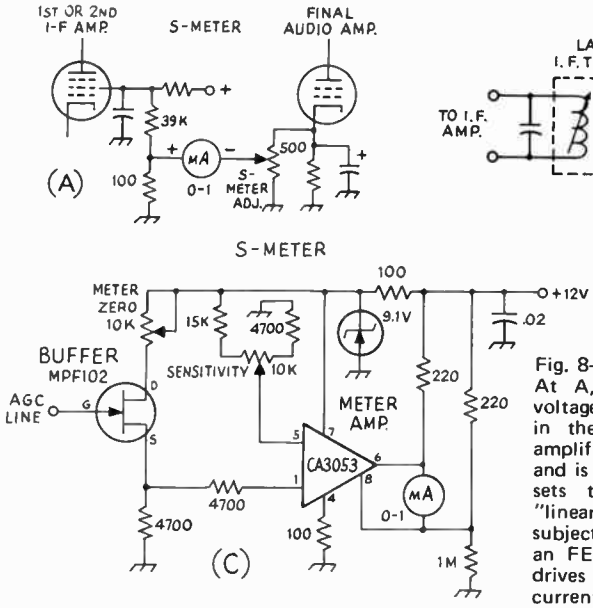

Fig. 8-24 — Practical examples of S-meter circuits. At A, a meter measures the change in screen voltage of an i-f amplifier stage, caused by changes in the agc voltage applied to the grid of the amplifier. At B, the i-f signal is rectified by CR1 and is fed to a 50-μA meter. A 10,000-ohm control sets the sensitivity and also functions as a "linearizing" resistor to make the meter less subject to the square-law response of CR1. At C, an FET samples the voltage on the agc line and drives an IC amplifier which provides the required current swing to operate a 1-mA meter.

S-METER CIRCUITS

A very simple meter indicator is shown at Fig. 8-24B. Rectified i-f is obtained by connecting CR1 to the take-off point for the detector. The dc is filtered by means of a 560-ohm resistor and a .05-μF capacitor. A 10,000-ohm control sets the meter at zero reading in the absence of a signal and also serves as a "linearizing" resistor to help compensate for the nonlinear output from CR1. The meter is a 50-μA unit, therefore consuming but a small amount of current from the output of the i-f.

Another simple approach is to meter the change in screen voltage of an i-f amplifier stage. The swing in screen potential is caused by changes in the agc voltage applied to the stage. A reference voltage is obtained from the cathode of the audio-output stage. A 1-mA meter is suitable for the circuit shown in Fig. 8-24A. At C, a more complex design is employed which can operate directly from the agc line of a transistorized receiver. The sensitivity of the metering circuit is adjusted by changing the gain of the IC meter amplifier. An FET buffer is employed to insure that loading of the agc line will be negligible.

IMPROVING RECEIVER SELECTIVITY

INTERMEDIATE-FREQUENCY AMPLIFIERS

One of the big advantages of the superheterodyne receiver is the improved selectivity that is possible. This selectivity is obtained in the i-f amplifier, where the lower frequency allows more selectivity per stage than at the higher signal frequency. For normal a-m (double-sideband) reception, the limit to useful selectivity in the i-f amplifier is the point where too many of the high-frequency sidebands are lost. The limit to selectivity for a single-sideband signal, or a double-sideband a-m signal treated as an ssb signal, is about 2000 Hz, but reception is much more normal if the bandwidth is opened up to 2300 or 2500 Hz. The correct bandwidth for fm or pm reception is determined by the deviation of the received signal; sideband cutting of these signals results in distortion. The limit to useful selectivity in code work is around 150 or 200 Hz for hand-key speeds, but this much selectivity requires excellent stability in both transmitter and receiver, and a slow receiver tuning rate for ease of operation.

Single-Signal Effect

In heterodyne cw (or ssb) reception with a superheterodyne receiver, the beat oscillator is set to give a suitable audio-frequency beat note when the incoming signal is converted to the intermediate frequency. For example, the beat oscillator may be set to 454 kHz (the i-f being 455 kHz) to give a 1000-Hz beat note. Now, if an interfering signal appears at 453 kHz or if the receiver is tuned to heterodyne the incoming signal to 453 kHz, it will also be heterodyned by the beat oscillator to produce a 1000-Hz beat. Hence every signal can be tuned in at two places that will give a 1000-Hz beat

(or any other low audio frequency). The audio-frequency image effect can be reduced if the i-f selectivity is such that the incoming signal, when heterodyned to 453 kHz, is attenuated to a very low level.

When this is done, tuning through a given signal will show a strong response at the desired beat note on one side of zero beat only, instead of the two beat notes on either side of zero beat characteristic of less-selective reception, hence the name: single-signal reception.

The necessary selectivity is not obtained with nonregenerative amplifiers using ordinary tuned circuits unless a low i-f, or a large number of circuits, is used.

Regeneration

Regeneration can be used to give a single-signal effect, particularly when the i-f is 455 kHz or lower. The resonance curve of an i-f stage at critical regeneration (just below the oscillating point) is extremely sharp, a bandwidth of 1 kHz at 10 times down and 5 kHz at 100 times down being obtainable in one stage. The audio-frequency image of a given signal thus can be reduced by a factor of nearly 100 for a 1000-Hz beat note (image 2000 Hz from resonance).

Regeneration is easily introduced into an i-f amplifier by providing a small amount of capacity coupling between grid and plate. Bringing a short length of wire, connected to the grid, into the vicinity of the plate lead usually will suffice. The feedback may be controlled by a cathode-resistor gain control. When the i-f is regenerative, it is preferable to operate the tube at reduced gain (high bias) and depend on regeneration to bring up the signal strength. This prevents overloading and increases selectivity.

The higher selectivity with regeneration reduces the over-all response to noise generated in the earlier stages of the receiver, just as does high selectivity produced by other means, and therefore improves the signal-to-noise ratio. However, the regenerative gain varies with signal strength, being less on strong signals.

Crystal Filters; Phasing

A simple means for obtaining high selectivity is by the use of a piezoelectric quartz crystal as a selective filter in the i-f amplifier. Compared to a good tuned circuit, the Q of such a crystal is extremely high. The crystal is ground resonant at the i-f and used as a selective coupler between i-f stages. For single-signal reception, the audio-frequency image can be reduced by 50 dB or more. Besides practically eliminating the af image, the high selectivity of the crystal filter provides good discrimination against adjacent signals and also reduces the broadband noise.

BAND-PASS FILTERS

A single high-Q circuit (e.g., a quartz crystal or regenerative stage) will give adequate single-signal cw reception under most circumstances. For phone reception, however, either single-sideband or a-m, a band-pass characteristic is more desirable. A band-pass filter is one that passes without unusual attenuation a desired *band* of frequencies and rejects signals outside this band. A good band-pass filter for single-sideband reception might have a bandwidth of 2500 Hz at -6 dB and 4 kHz at -60 dB; a filter for a-m would require twice these bandwidths if both sidebands were to be accommodated, thus assuring suitable fidelity.

The simplest band-pass crystal filter is one using two crystals, as in Fig. 8-25A. The two crystals are separated slightly in frequency. If the frequencies are only a few hundred Hz apart the characteristic is a good one for cw reception. With crystals about 2 kHz apart, a reasonable phone characteristic is obtained. Fig. 8-2 shows a selectivity characteristic of an amplifier with a bandpass (at -6 dB) of 2.4 kHz, which is typical of what can be expected from a two-crystal bandpass filter.

More elaborate crystal filters, using four and six crystals, will give reduced bandwidth at -60 dB without decreasing the bandwidth at -6 dB. The resulting increased "skirt selectivity" gives better rejection of adjacent-channel signals. "Crystal-lattice" filters of this type are available commercially for frequencies up to 40 MHz or so, and they have also been built by amateurs from inexpensive transmitting-type crystals. (See Vester, "Surplus-Crystal High-Frequency Filters," *QST*, January, 1959; Healey, "High-Frequency Crystal Filters for SSB," *QST*, October, 1960.)

Two half-lattice filters of the type shown at Fig. 8-25A can be connected back to back as shown at B. The channel spacing of Y1 and Y2 will depend upon the receiving requirements as discussed in the foregoing text. Ordinarily, for ssb reception (and nonstringent cw reception) a frequency separation of approximately 1.5 kHz is suitable. The overall i-f strip of the receiver is tuned to a frequency which is midway between Y1 and Y2. C1 is tuned to help give the desired shape to the passband. L1 is a bifilar-wound toroidal inductor which tunes to the i-f frequency by means of C1. The values of R1 and R2 are identical and are determined by the filter response desired. Ordinarily the ohmic value is on the order of 600 ohms, but values as high as 5000 ohms are sometimes used. The lower the value of resistance, the broader and flatter will be the response of the filter. Though the circuit at B is shown in a transistorized circuit, it can be used with vacuum tubes or integrated circuits as well. The circuit shows an i-f frequency of 9 MHz, but the filter can be used at any desired frequency below 9 MHz by altering the crystal frequencies and the tuned circuits. Commercial versions of the 9-MHz lattice filter are available at moderate cost.[1] War-surplus FT-241 crystals in the 455-kHz range are inexpensive and lend themselves nicely to this type of circuit.

Mechanical filters can be built at frequencies below 1 MHz. They are made up of three sections; an input transducer, a mechanically resonant filter

[1] Spectrum International, P. O. Box 87, Topsfield, MA 01983. Also, McCoy Electronics Co., Mount Holly Springs, PA.

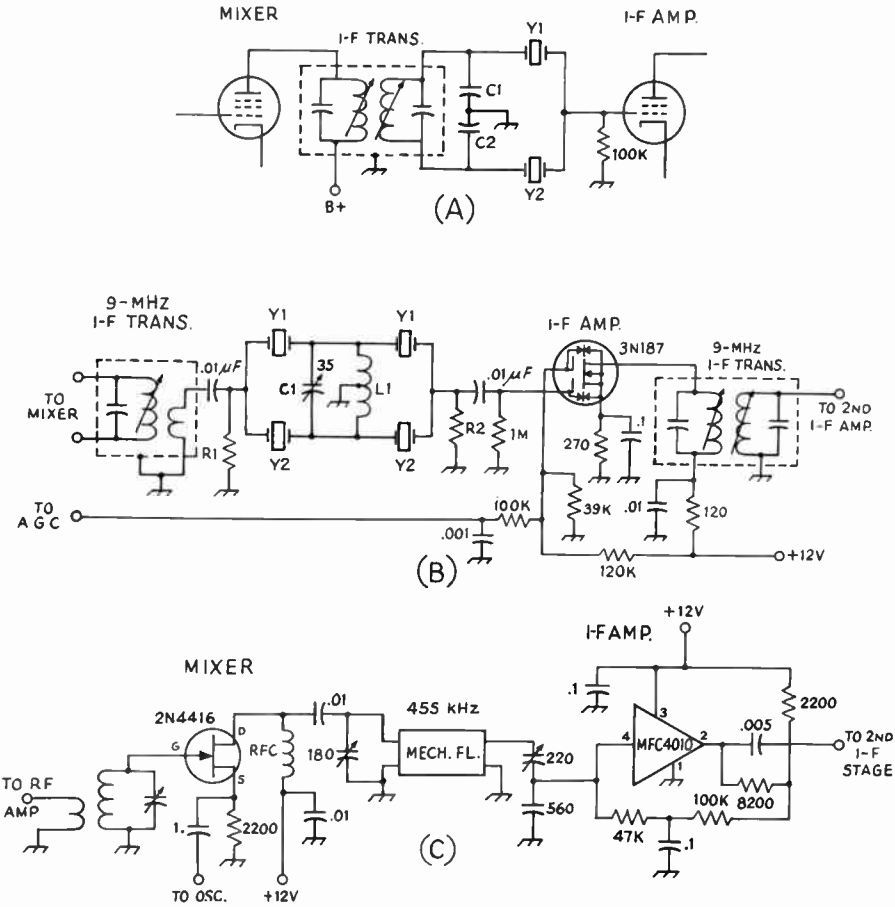

Fig. 8-25 — A half-lattice bandpass filter at A; B shows two half-lattice filters in cascade; C shows a mechanical filter.

section, and an output transducer. The transducers use the principle of magneto-striction to convert the electrical signal to mechanical energy, then back again. The mechanically resonant section consists of carefully machined metal disks supported and coupled by thin rods. Each disk has a resonant frequency dependent upon the material and its dimensions, and the effective Q of a single disk may be in excess of 2000. Consequently, a mechanical filter can be built for either narrow or broad passband with a nearly rectangular curve. Mechanical filters are available commercially and are used in both receivers and single-sideband transmitters. They are moderately priced.

The signal-handling capability of a mechanical filter is limited by the magnetic circuits to from 2 to 15 volts rms, a limitation that is of no practical importance provided it is recognized and provided for. Crystal filters are limited in their signal-handling ability only by the voltage breakdown limits, which normally would not be reached before the preceding amplifier tube was overloaded. A more serious practical consideration in the use of any high-selectivity component is the prevention of coupling "around" the filter, externally, which can only degrade the action of the filter.

The circuit at Fig. 8-25C shows a typical hookup for a mechanical filter. FL1 is a Collins 455-FB-21, which has an ssb band-pass characteristic of 2.1 kHz. It is shown in a typical solid-state receiver circuit, but can be used equally as well in a tube-type application.

Placement of the BFO signal with respect to the passbands of the three circuits at A, B, and C, is the same. Either a crystal-controlled or self-excited oscillator can be used to generate the BFO signal and the usual practice is to place the BFO signal at a frequency that falls at the two points which are approximately 20 dB down on the filter curve, dependent upon which sideband is desired. Typically, with the filter specified at C, the center frequency of FL1 is 455 kHz. To place the BFO at the 20-dB points (down from the center-frequency peak) a signal at 453 and 456 kHz is required.

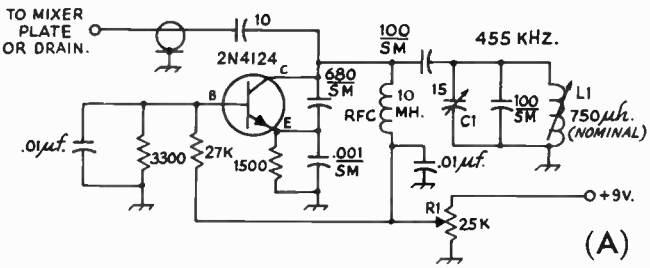

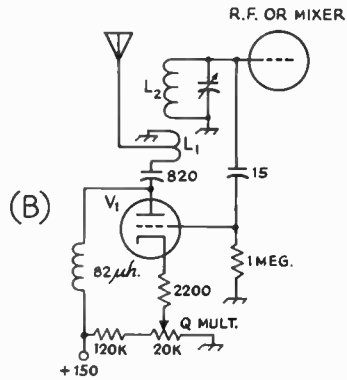

Fig. 8-26 — An i-f Q multiplier for use with a bipolar transistor (A). At B, a tube-type rf Q multiplier which can be used at the first stage of the receiver. The antenna coil is used for feedback to V1, which then introduces "negative resistance" to L2.

Q Multiplier

The "*Q* Multiplier" is a stable regenerative stage that is connected in parallel with one of the i-f stages of a receiver. In one condition it narrows the bandwidth and in the other condition it produces a sharp "null" or rejection notch. A "tuning" adjustment controls the frequency of the peak or null, moving it across the normal passband of the receiver i-f amplifier. The *shape* of the peak or null is always that of a single tuned circuit (Fig. 2-42) but the effective *Q* is adjustable over a wide range. A *Q* Multiplier is most effective at an i-f of 500 kHz or less; at higher frequencies the rejection notch becomes wide enough (measured in Hz) to reject a major portion of a phone signal. Within its useful range, however, the *Q* Multiplier will reject an interfering carrier without degrading the quality of the desired signal.

In the "peak" condition the *Q* Multiplier can be made to oscillate by advancing the "peak" (regeneration) control far enough and in this condition it can be made to serve as a beat-frequency oscillator. However, it cannot be made to serve as a selective element and as a BFO *at the same time.* Some inexpensive receivers may combine either a *Q* Multiplier or some other form of regeneration with the BFO function, and the reader is advised to check carefully any inexpensive receiver he intends to buy that offers a regenerative type of selectivity, in order to make sure that the selectivity is available when the BFO is turned on.

A representative circuit for a transistorized *Q*-multiplier is given in Fig. 8-26A. The constants given are typical for i-f operation at 455 kHz. L1 can be a J. W. Miller 9002 or 9102 slug-tuned inductor. A 25,000-ohm control, R1, permits adjustment of the regeneration. C1 is used to tune the *Q*-multiplier frequency back and forth across the i-f passband for peaking or notching adjustments. With circuits of this type there is usually a need to adjust both R1 and C1 alternately for a peaking or notching effect, because the controls tend to interlock as far as the frequency of oscillation is concerned. A *Q*-multiplier should be solidly built in a shielded enclosure to assure maximum stability.

Q multipliers can be used at the front end of a receiver also, as shown at B in Fig. 8-26. The enhancement of the *Q* at that point in a receiver greatly reduces image problems because the selectivity of the input tuned circuit is increased markedly. The antenna coil, L1, is used as a feedback winding to make V1 regenerative. This in effect adds "negative resistance" to L2, increasing its *Q*. A 20,000-ohm control sets the regeneration of V1, and should be adjusted to a point just under regeneration for best results. Rf *Q* multiplication is not a cure for a poor-quality inductor at L2, however.

T-Notch Filter

At low intermediate frequencies (50 – 100 kHz) the T-notch filter of Fig. 8-27 will provide a sharp tunable null.

The inductor *L* resonates with *C* at the rejection frequency, and when $R = QX_L/4$ the rejection is maximum. (X_L is the coil-reactance and *Q* is the coil *Q*.) In a typical 50-kHz circuit, *C* might be 3900 pF making *L* approximately 2.6 mH. When *R* is greater than the maximum-attenuation value, the circuit still provides some rejection, and in use the inductor is detuned or shorted out when the rejection is not desired.

At higher frequencies, the T-notch filter is not sharp enough with available components to reject only a narrow band of frequencies.

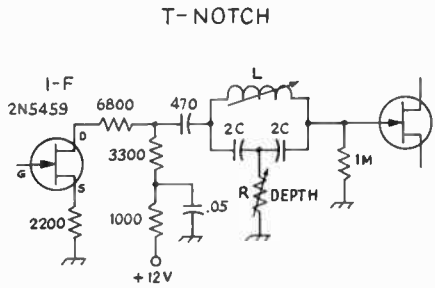

Fig. 8-27 — Typical T-notch (bridged-T) filter, to provide a sharp notch at a low i-f. Adjustment of L changes the frequency of the notch; adjustment of R controls the notch depth.

RADIO-FREQUENCY AMPLIFIERS

While selectivity to reduce audio-frequency images can be built into the i-f amplifier, discrimination against radio-frequency images can only be obtained in tuned circuits or other selective elements ahead of the first mixer or converter stage. These tuned circuits are usually used as the coupling networks for one or more vacuum tubes or transistors, and the combinations of circuits and amplifying devices are called radio-frequency amplifiers. The tuned circuits contribute to the rf-image rejection and the amplifying device(s) determines the noise figure of the receiver.

Knowing the Q of the coil in each tuned circuit between the antenna and the first mixer or converter stage, the image rejection capability can be computed by using the chart in Fig. 2-50. The Q of the input tuned circuit (coupled to the antenna) should be taken as about one-half the unloaded Q of that circuit, and the Q of any other tuned circuit can be assumed to be the unloaded Q to a first approximation (the vacuum tubes will reduce the circuit Q to some extent, especially at 14 MHz and higher).

In general, receivers with an i-f of 455 kHz can be expected to have some noticeable image response at 14 MHz and higher if there are only two tuned circuits (or one rf stage) ahead of the mixer or converter. Regeneration in the rf amplifier will reduce image response, but regeneration usually requires frequent readjustment when tuning across a band. Regeneration is, however, a useful device for improving the selectivity of an rf amplifier without requiring a multiplicity of tuned circuits.

With three tuned circuits between the antenna and the first mixer, and an i-f of 455 kHz, no images should be encountered up to perhaps 25 MHz. Four tuned circuits or more will eliminate any images at 28 MHz when an i-f of 455 kHz is used.

Obviously, a better solution to the rf selectivity problem (elimination of image response) is to use an i-f higher than 455 kHz, and most modern receivers use an i-f of 1600 kHz or higher. The owner of a receiver with a 455-kHz i-f amplifier can enjoy image-free reception on the higher frequencies by using a crystal-controlled converter ahead of the receiver and utilizing the receiver as a "tunable i-f amplifier" at 3.5 or 7.0 MHz.

For best selectivity rf amplifiers should use high-Q circuits and tubes with high input and output resistance. Variable-μ pentodes and field-effect transistors (JFET and MOSFET) are practically always used, although triodes (neutralized or otherwise connected so that they won't oscillate) are often used on the higher frequencies because they introduce less noise. However, their lower plate resistance will load the tuned circuits. Pentodes and FETs are better where maximum image rejection is desired, because they have less loading effect on the tuned circuits.

Representative Circuits

An example of a typical vacuum-tube rf amplifier using a remote-cutoff pentode and agc is given in Fig. 8-28 at A. The manual rf gain control, R1, varies the bias on the stage, thereby changing the gain of the tube.

In the circuit at B, two junction field-effect transistors are used as a cascade rf amplifier. If sufficient isolation is provided between the input and output tuned circuits, neutralization is seldom required below 30 MHz. Agc potential is applied to the gate of the second JFET. For efficient operation as an rf amplifier, the transistors chosen should have an f_T rating somewhat above the desired operating frequency.

A dual-gate MOSFET with built-in transient protection is used in the circuit at C. Negative agc voltage is applied to gate 2. Zener diodes contained within the 40673, bridged between the gates and the source/substrate connection, provide protection from transient voltages (up to 10 V pk-pk) that might otherwise damage the device. The gate-1 and drain connections are tapped down on their associated tuned circuits, a technique which produces stability without neutralization with only a slight reduction in gain.

The rf amplifier shown in Fig. 8-28D is a broad-band type which produces approximately 12 dB of gain from 0.5 to 50 MHz. Because of the high drain-to-gate capacitance of high-current FETs such as the CP651, the transistor is operated in a grounded-gate circuit to avoid the need for neutralization. A passive input circuit and 4-to-1 balun output transformer are employed. Details of the construction of balun transformers are given in Chapter 6.

FEEDBACK

Feedback giving rise to regeneration and oscillation can occur in a single stage or it may appear as an overall feedback through several stages that are on the same frequency. To avoid feedback in a single stage, the output must be isolated from the input in every way possible, with the vacuum tube or transistor furnishing the only coupling between the two circuits. An oscillation can be obtained in an rf or i-f stage if there is any undue capacitive or inductive coupling between output and input circuits, if there is too high an impedance between cathode and ground or screen and ground, or if there is any appreciable impedance through which the grid and plate currents can flow in common.

To avoid overall feedback in a multistage amplifier, attention must be paid to avoid running any part of the output circuit back near the input circuit without first filtering it carefully. Since the signal-carrying parts of the circuit can't be filtered, the best design for any multistage amplifier is a straight line, to keep the output as far away from

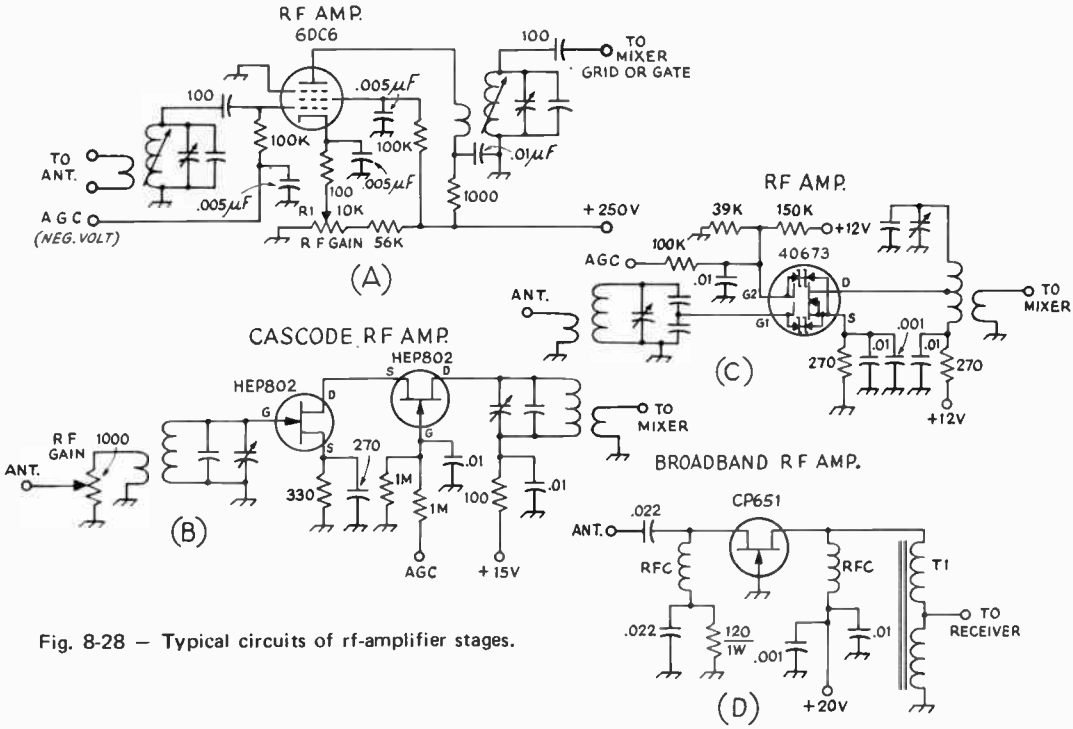

Fig. 8-28 — Typical circuits of rf-amplifier stages.

the input as possible. For example, an rf amplifier might run along a chassis in a straight line, run into a mixer where the frequency is changed, and then the i-f amplifier could be run back parallel to the rf amplifier, provided there was a very large frequency difference between the rf and the i-f amplifiers. However, to avoid any possible coupling, it would be better to run the i-f amplifier off at right angles to the rf amplifier line, just to be on the safe side. Good shielding is important in preventing overall oscillation in high-gain-per-stage amplifiers, but it becomes less important when the stage gain drops to a low value. In a high-gain amplifier, the power leads (including the heater circuit) are common to all stages, and they can provide the overall coupling if they aren't properly filtered. Good bypassing and the use of series isolating resistors will generally eliminate any possibility of coupling through the power leads. Rf chokes, instead of resistors, are used in the heater leads where necessary.

CROSS MODULATION

Since a one- or two-stage rf amplifier will have a bandwidth measured in hundreds of kHz at 14 MHz or higher, strong signals will be amplified through the rf amplifier even though it is not tuned exactly to them. If these signals are strong enough, their amplified magnitude may be measurable in *volts* after passing through several rf stages. If an undesired signal is strong enough after amplification in the rf stages to shift the operating point of a tube or transistor (by driving the grid into the positive region), the undesired signal will modulate the desired signal. This effect is called cross modulation, and is often encountered in receivers with several rf stages working at high gain. It shows up as a superimposed modulation on the signal being listened to, and often the effect is that a signal can be tuned in at several points. It can be reduced or eliminated by greater selectivity in the antenna and rf stages (difficult to obtain), the use of FETs or variable-μ tubes in the rf amplifier, reduced gain in the rf amplifier, or reduced antenna input to the receiver. The 6BJ6, 6BA6 and 6DC6 are recommended for rf amplifiers where cross modulation may be a problem.

A receiver designed for minimum cross modulation will use as little gain as possible ahead of the high-selectivity stages, to hold strong unwanted signals below the cross-modulation point. Cross modulation often takes place in double-conversion superheterodynes at the *second* converter stage because there is insufficient selectivity up to this point and at this point the signals have quite appreciable amplitudes. Whenever interference drops out quite suddenly with a reduction in the setting of the gain control, cross modulation should be suspected. Normally, of course, the interference would reduce in amplitude in proportion to the desired signal as the gain setting is reduced.

RF Gain Control

To avoid cross modulation and other overload effects in the mixer and rf stages, the gain of the rf stages is usually made adjustable. This is accomplished by using variable-μ tubes and varying

the dc grid bias, either in the grid or cathode circuit. If the gain control is automatic, as in the case of agc, the bias is controlled in the grid circuit. Manual control of rf gain is generally done in the cathode circuit. A typical rf amplifier stage with the two types of gain control is shown in schematic form in Fig. 8-28A. The agc control voltage (negative) is derived from rectified carrier or signal at the detector before the audio amplifier, or in the case of a cw or ssb receiver it can be derived from rectified audio. The manual-gain control voltage (positive with respect to chassis) is usually derived from a potentiometer across the B+ supply, since the bias can be changed even though little plate current is being drawn.

Tracking

Tracking refers to the ability of a receiver to have all of its front-end stages – usually the rf amplifier, the mixer, and the oscillator – tune over a given range while each stage remains tuned to its proper frequency at any specified point in the tuning range. This arrangement provides a single tuning control for bandset and bandspread adjustments. To achieve proper tracking, it is usually necessary to have variable inductors and variable trimmer and padder capacitors for each of the tuned circuits. A two- or three-section variable capacitor is used for the tuning control.

Most modern receivers use a separate tuning control for the local oscillator and this is called the "main tuning." The rf and mixer stages are tracked and use a two-section variable for front-end peaking adjustments. This control is frequently called "preselector tuning." If the main tuning control is moved, the preselector is readjusted for a peak signal response at the new frequency.

REDUCING BROADCAST STATION INTERFERENCE

Some receivers, particularly those that are lacking in front-end selectivity, are subject to cross talk and overload from adjacent-frequency ham or commercial stations. This condition is particularly common with simple receivers that use bipolar transistors in the rf and mixer stages. With the latter, the range of linear operation is small compared to that of vacuum tubes. Large signals send the transistors into the nonlinear operating region, causing severe crosstalk.

The most common cross-talk problem in ham radio is that which is caused by the presence of nearby broadcast stations in the 550- to 1600-kHz range. In some regions, the ham bands – when tuned in on even the best receivers – are a mass of distorted "pop" music, garbled voices, and splatter. It should be pointed out at this juncture that the broadcast stations themselves seldom are at fault, (although in isolated instances they are capable of generating spurious output if operating in a faulty manner).

The most direct approach to the problem of broadcast-station interference is to install a rejection filter between the antenna feed line and

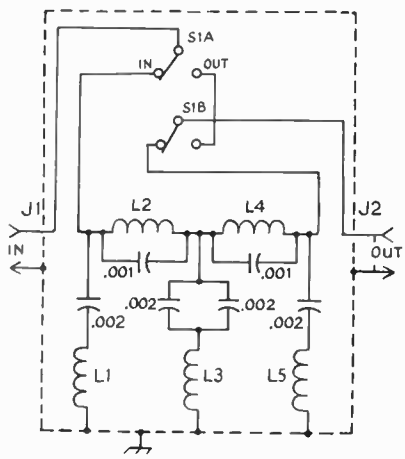

Fig. 8-29 – Inside view of the broadcast trap.

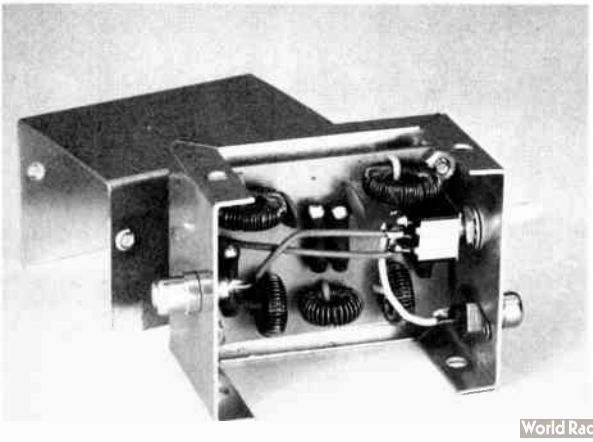

Fig. 8-30 – Capacitance is in pF. Capacitors are disk or tubular ceramic.
J1, J2 – Phono jack.
L1, L5 – 10-μH inductor, 43 turns, No. 26 enam. wire on Amidon T-50-2 toroid core (available from Amidon Associates, 12033 Ostego St., North Hollywood, CA 91607).
L2, L4 – 33-μH inductor, 75 turns, No. 30 enam. wire on Amidon T-68-2 toroid core.
L3 – 4.7-μH inductor, 30 turns, No. 26 enam. wire on Amidon T-50-2 toroid core.
S1 – Spst toggle.

the input terminals of the receiver. Such a filter, if capable of providing sufficient attenuation, prevents the broadcast-station signals from reaching the ham receiver's front end, thus solving the cross-talk problem.

An effective band-rejection filter, containing two constant-*k* sections in cascade, is shown in Fig. 8-30. It offers sharp rejection to signals in the 500- to 1600-kHz range but does not impair reception above or below the broadcast band. It is designed for use in low-impedance lines, particularly those that are 50 to 75 ohms.

The band-rejection filter is housed in a 3 1/2 X 2 1/8 X 1 5/8-inch Minibox. Phono connections are used for J1 and J2 – an aid to cost reduction. Different-style fittings can be used if the builder wishes. Standard-value components are used throughout the filter and the values specified must be used if good results are to be had.

In situations where a *single* broadcast station is involved in the cross-talk problem, a simple series- or parallel-tuned wave trap, tuned to the frequency of the interfering station, may prove adequate in solving the problem. (Such a trap can be installed as shown in Fig. 8-31.) The trap inductors can be made from ferrite-bar broadcast radio loop antennas and tuned to resonance by means of a 365-pF variable capacitor. Traps of this type should be enclosed in a metal box, as is true of the band-rejection filter.

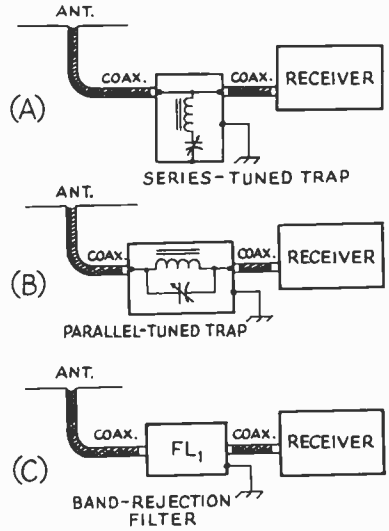

Fig. 8-31 – Examples of series- and parallel-tuned single-frequency traps (installed) are shown at A and B. At C, FL1 represents the band-rejection filter described in the text. If possible, the filter used should be bolted to the chassis or case of the receiver. The receiver should have a good earth ground connected to it.

FRONT-END OVERLOAD PROTECTION FOR THE RECEIVER

It is not uncommon to experience front-end overloading when the station receiver is subjected to an extremely strong signal. Frequently, it becomes necessary to install some type of external attenuator between the antenna and the input of the receiver to minimize the bad effects caused by the strong signal, or signals. Ideally, such an attenuator should be designed to match the impedance of the antenna feed line and the input impedance of the receiver. Also, the attenuator should be variable, enabling the user to have some control over the amount of attenuation used. Manufacturers of some modern receiving equipment build attenuators into the front end of their receivers, offering benefits that are not available from the normal rf gain-control circuit.

Examples of two such attenuators are given in Figs. 8-34 and 8-35. In Fig. 8-35 a ladder-type attenuator gives a 0- to 40-decibel range of control in five steps. A precision step attenuator is illustrated in Fig. 8-34. The latter offers an attenuation range of 3 to 61 decibels in 3-dB steps by closing one or more of five toggle switches. Both units are designed for use in low-impedance lines. The one in Fig. 8-35 is designed for a midrange impedance of 60 ohms, making it satisfactory for use with receivers having a 50- or 75-ohm input. Although designed for an impedance of 50 ohms, the attenuator of Fig. 8-34 will work satisfactorily with 75-ohm receiver inputs if accurate attenuation steps are not required.

Standard-value 1/2-watt resistors are used in the simple attenuator, which will give good results from the broadcast band to 30 MHz. Isolation between sections is not good enough to make this unit particularly effective above 30 MHz. The

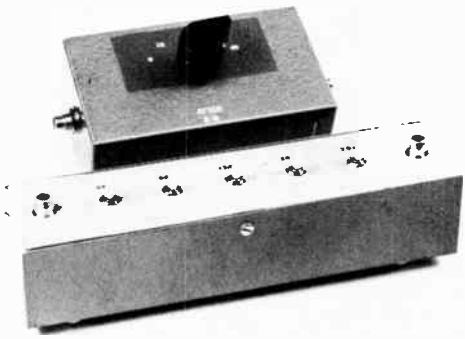

Fig. 8-32 – Two attenuators for receiver front-end protection.

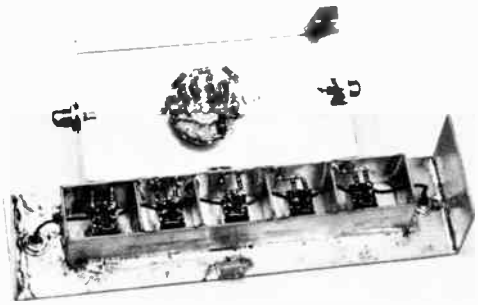

Fig. 8-33 — Inside view of the attenuators. In the upper unit the resistors are mounted directly on the switch, using short pigtails wherever possible. Wide strips of copper are used for the input and output leads. The lower unit has each attenuator section individually shielded. The entire assembly is made up of double-sided circuit board material, cut to form the necessary sections and soldered on all abutting edges. All resistors should be connected with the shortest possible leads. A U-shaped piece of aluminum forms the base.

precision step attenuator, if carefully constructed to reduce leakage to a minimum, will be effective to 150 MHz or higher. The smaller 1/4-watt resistors are used as they have less inductance than the 1/2-watt types.

Either attenuator can be used ahead of the receiver, or can be built into the receiver as an integral part of the circuit. Such a device is particularly useful ahead of receivers that do not have an rf gain control, such as simple regenerative receiving sets.

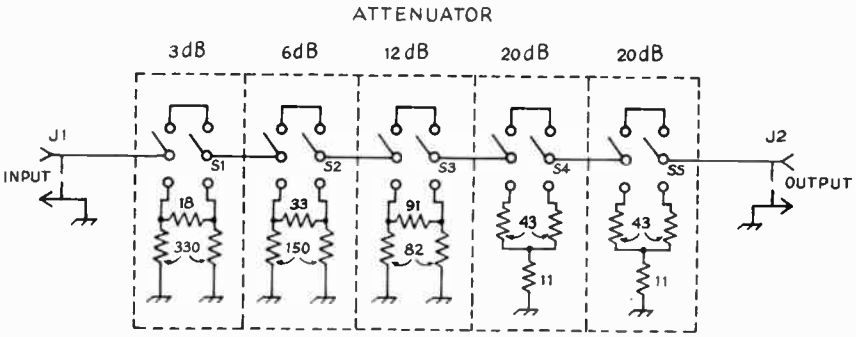

Fig. 8-34 — Circuit diagram of the step attenuator. All resistors are 1/4-watt composition, 5-percent tolerance. J1, J2 — Phone plugs, or similar. S1-S5 — Miniature toggle switch.

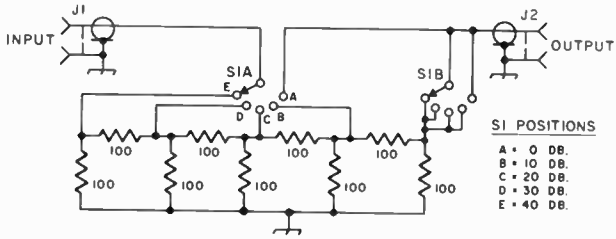

Fig. 8-35 — Schematic of the attenuator. Resistance is in ohms. Resistors are 1/2-watt composition, 10-percent tolerance. S1 is a phenolic rotary 1-section, 2-pole, 5-position switch. J1 and J2 are standard coax connectors. Approximate attenuation in decibels is given for each switch position.

IMPROVING RECEIVER SENSITIVITY

The sensitivity (signal-to-noise ratio) of a receiver on the higher frequencies (above 20 MHz) is dependent upon the bandwidth of the receiver and the noise contributed by the front end of the receiver. Neglecting the fact that image rejection may be poor, a receiver with no rf stage is generally satisfactory, from a sensitivity point, in the 3.5- and 7-MHz bands. However, as the frequency is increased and the atmospheric noise becomes less, the advantage of a good front end becomes apparent. Hence at 14 MHz and higher it is worth while to use at least one stage of rf amplification ahead of the first detector for best sensitivity as well as image rejection. The multigrid converter tubes have very poor noise figures, and even the best pentodes and triodes are three or four times noisier when used as mixers than they are when used as amplifiers.

If the purpose of an rf amplifier is to improve the receiver noise figure at 14 MHz and higher, a good FET, or a high-g_m pentode or triode should be used. Among the pentodes, the best tubes are the 6EH7, 6BZ6, and 6AK5. Of the triodes, the 6AN4, 6CW4, and 6DS4 are best. Among the better field-effect transistors are the MPF102, 2N4417, 3N128, CP625, 3N200, and 40673.

When a receiver is satisfactory in every respect (stability and selectivity) except sensitivity on 14 through 30 MHz, the best solution for the amateur is to add a preamplifier, a stage of rf amplification designed expressly to improve the sensitivity. If image rejection is lacking in the receiver, some selectivity should be built into the preamplifier (it is then called a preselector). If, however, the receiver operation is poor on the higher frequencies but is satisfactory on the lower ones, a converter is the best solution.

Some commercial receivers that appear to lack sensitivity on the higher frequencies can be improved simply by tighter coupling to the antenna. This can be accomplished by changing the antenna feed line to the right value (as determined from the receiver instruction book) or by using a simple matching device.

Gain Control

In a receiver front end designed for best signal-to-noise ratio, it is advantageous in the reception of weak signals to eliminate the gain control from the first rf stage and allow it to run "wide open" all the time. If the first stage is controlled along with the i-f (and other rf stages, if any), the signal-to-noise ratio of the receiver will suffer. As the gain is reduced, the g_m of the first tube is reduced, and its noise figure becomes higher. A good receiver might well have two gain controls, one for the first rf stage and another for the i-f (and any other rf) stages. The first rf stage gain would be reduced only for extremely strong signals, thus assuring a good noise figure.

THE 80-10 FET PRESELECTOR

It is often necessary to put new life into tired or inexpensive receivers, especially when operation is marginal on the three higher hf bands – 14, 21 and 28 MHz. A preselector of the type described here can pep up the front end of such receivers while at the same time offering additional selectivity on all the hf bands. The latter helps to reduce images and generally improves the reception on some of the low-cost receivers. Often, signals heard on the amateur bands actually originate on quite different frequencies. They appear on ham sections of the dial as a result of image reception or overload of a receiver mixer.

Circuit Details

This preselector is self-contained, except for the power supply, and no modifications are required in the receiver used. The diagram of the unit is shown in Fig. 8-37. Input and output tuned circuits consist of the preselector tuning capacitor, C1, and high-Q coils wound on small toroid cores. Each coil has a trimmer capacitor for alignment purposes. A secondary winding is added which serves as the input or output 50-ohm link. Band changing is accomplished by S1, a multipole miniature switch. An "off" position is included so that the preselector may be bypassed when it is not required.

Two JFETs are operated in a cascode circuit. The advantage of this arrangement is that the capacitance between input and output is only a fraction of a picofarad – so low that neutralization is not required in the hf range. Current drain is low, so the preselector may be operated from a 9-volt transistor-radio battery if desired, with only a slight loss of gain and dynamic range. Otherwise, a 12-volt miniature power supply, such as the type sold for battery replacement, should be used. If battery operation is contemplated it would be well to add a power on/off switch; otherwise, current will be drawn all of the time.

The gain for each band has been set at approximately 20 dB by adjustment of the turns ratio on the rf transformers. Although the cascode circuit can provide up to 30 dB of gain, care must be taken so that the preselector does not overload the succeeding stages in the receiver.

Construction

The preselector is built on a 4 X 5-inch etched circuit board which is housed in a 7 X 5 X 3-inch homemade cabinet. The enclosure is made from two U-shaped pieces of aluminum stock. Any of the popular commercially made cabinets may be substituted. Also, point-to-point wiring using terminal strips may be employed in place of the etched board. Whatever the assembly technique chosen, good isolation between the input and output tuned circuits is of prime importance. Any stray coupling can cause instability. If trouble

Fig. 8-36 – The 80- to 10-meter preselector is constructed in a cabinet made from two U-shaped pieces of sheet aluminum. Press-on feet are used. Panel decals (obtained from H. H. Smith) lend a "finished" appearance to the unit.

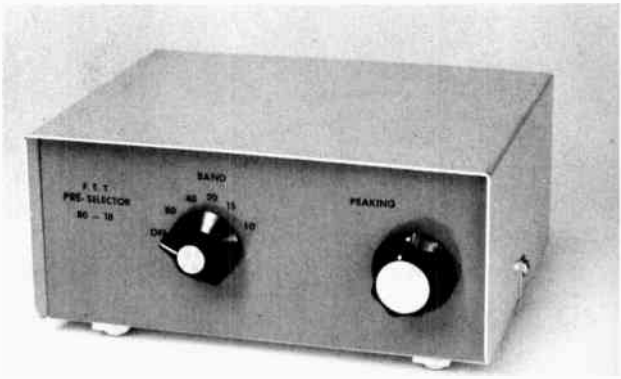

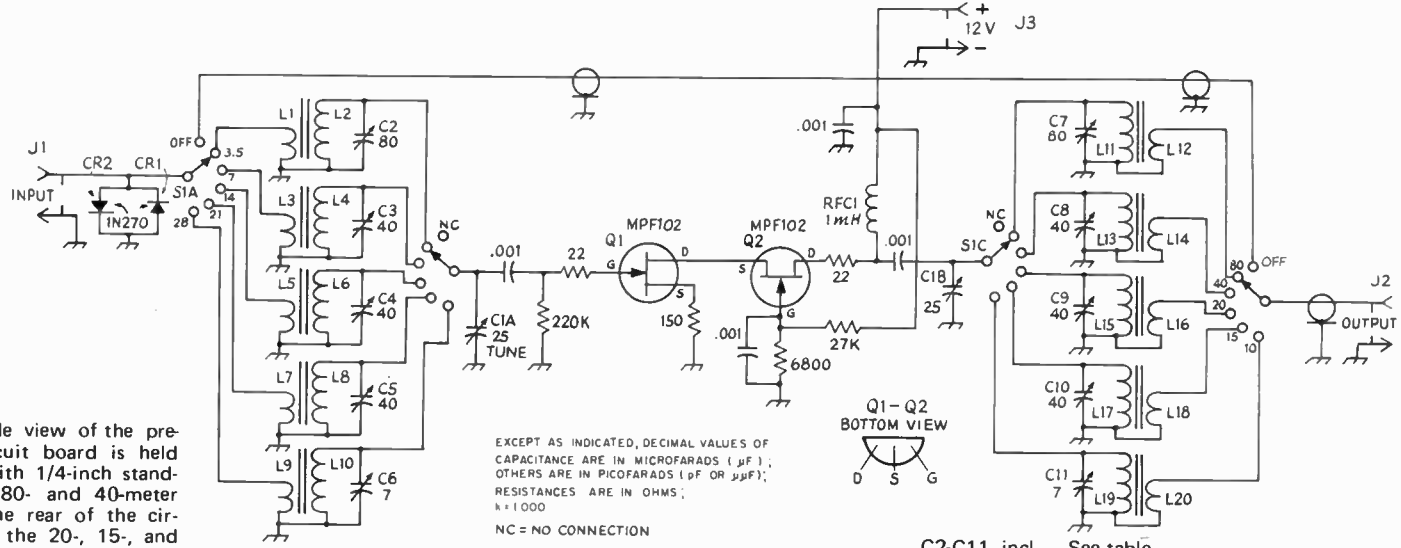

Fig. 8-38 — Inside view of the preselector. The circuit board is held off the chassis with 1/4-inch standoff pillars. The 80- and 40-meter coils are along the rear of the circuit board, with the 20-, 15-, and 10-meter input coils to the right of the switch while the output coils for the 14- to 28-MHz bands are to the left. Q1 is on the bottom left of the circuit board, with Q2 just above.

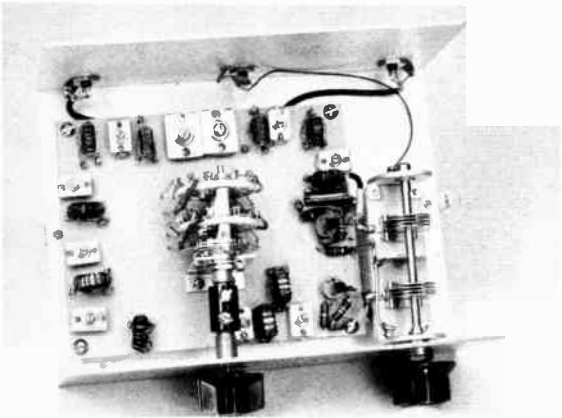

Fig. 8-37 — Schematic diagram of the selective preselector. Unless otherwise indicated, decimal values of capacitance are in μF; others are in pF. Resistors are 1/4- or 1/2-watt composition and fixed-value capacitors are disk ceramic.
C1 — Split-stator variable, dual section (Hammarlund HFA-25).
C2-C11, incl. — See table.
CR1-CR2 — High-speed switching diodes.
J1-J3, incl. — Phone jack, panel mount.
L1-L20, incl. — See table.
Q1, Q2 — HEP 802 or 2N5486.
RFC1 — Miniature choke (Miller 70F103A1).
S1 — Ceramic miniature rotary switch, 4 pole, 6 position, 2 section (Centralab PA-2011).

COIL TABLE

80	L1, L12 — 5 turns No. 30 enam. over L2, L11, respectively.	L2, L11 — 85 turns No. 30 enam. on Amidon T-50-2 core.	C2, C7 — 7-80-pF compression trimmer, Calectro A1-247
40	L3, L14 — 3 turns No. 30 enam. over L4, L13, respectively.	L4, L13 — 40 turns No. 30 enam. on Amidon T-50-2 core.	C3, C8 — 4-40-pF compression trimmer, Calectro A1-246
20	L5, L16, — 2½ turns No. 22 enam. over L6, L15, respectively.	L6, L15 — 20 turns No. 22 enam. on Amidon T-50-2 core.	C4, C9 — 4-40-pF compression trimmer, Calectro A1-246
15	L7, L18 — 2 turns No. 22 enam. over L8, L17, respectively.	L8, L17 — 13 turns No. 22 enam. on Amidon T-50-6 core.	C5, C10 — 4-40-pF compression trimmer, Calectro A1-246
10	L9, L20 — 1½ turns No. 22 enam. over L10, L19, respectively.	L10, L19 — 10 turns No. 22 enam. on Amidon T-50-6 core.	C6, C11 — 0.9-7-pF compression trimmer, Calectro A1-245
Note: Amidon Associates, 12033 Otsego Street, North Hollywood, CA 91607			

develops, a shield between Q1 and Q2 may be of help.

The band switch, S1, is mounted on an aluminum bracket which is, in turn, mounted at the center of the circuit board. The toroid coils are held in place with a drop of epoxy cement. The shield that separates the two sections of C1 must be grounded to the etched board with a short lead. This metal strip provides vital shielding between sections A and B. The PRESELECTOR capacitor is mounted directly to the front panel using hardware supplied with the unit. All of the trimmer capacitors are mounted on the circuit board.

During assembly, whether or not a circuit board is used, a heat sink should always be employed when soldering the transistor leads. If excessive heat reaches the body of the transistor, the device can be ruined.

The input, output, and power jacks are mounted on the rear apron of the chassis. The rf protection diodes, CR1CR2, are connected right across J1. Subminiature coax (RG-174A/U) is used to connect the input and output jacks to the circuit board. Sockets for the transistors were included in the original model to facilitate experimentation; they may be omitted if desired.

Alignment

The completed preselector is best adjusted with a signal generator. However, if no test equipment is available, on-the-air signals may be used. The antenna or generator should be connected to J1 and a short patch cord run from J2 to the receiver. Start with the 10-meter band, and set C1 with the plates fully unmeshed. Then tune in a signal at the uppermost point in the band. Adjust trimmers C6 and C12 for maximum indication on the receiver S meter. Repeat this procedure for the other bands, setting the appropriate trimmers. The lower-frequency bands will appear to tune more broadly. However, the selectivity provided by the high-*Q* rf transformers is about the same on each band.

If this preselector is to be used with a transceiver, the unit will have to be switched *out* of the antenna line when transmitting. Otherwise severe damage will result to the coils and transistors in the unit. If the transceiver has a separate receiving-antenna input, as some do, the preselector can be connected to this jack, and the feeder switched with an external antenna-change-over relay.

SQUELCH CIRCUITS

An audio squelch is one that cuts off the receiver output when no signal is coming through the receiver. A squelch is useful in mobile equipment where the no-signal receiver hiss noise may be as loud as some of the weak signals being copied. Noise of this kind, when listened to over a sustained period, can cause considerable operator fatigue. A squelch is useful with certain types of fixed-station equipment too, especially where continuous monitoring of a fixed vhf or uhf frequency is desired.

A practical vacuum-tube squelch circuit is given in Fig. 8-39 at A. A twin triode (12AX7) serves as an audio amplifier and a control tube. When the agc voltage is low or zero, the lower (control) triode draws plate current. The consequent voltage drop across the adjustable resistor in the plate circuit cuts off the upper (amplifier) triode and no signal or noise is passed. When the agc voltage rises to the cutoff value of the control triode, the tube no longer draws current and the bias on the amplifier triode is now only its normal operating bias, furnished by the 1000-ohm resistor in the cathode circuit. The tube now functions as an ordinary amplifier and passes signals. The relation between the agc voltage and the signal turn-on point is adjusted by varying the resistance in the plate circuit of the control triode.

The circuit shown at B employs a Schmitt-trigger input to achieve positive on-off gating of the audio signal. For ssb operation, the length of the squelch-gate on time after the input signal disappears is increased by switching in an electrolytic capacitor. The dc signal from the squelch gate controls an emitter follower which is connected between the receiver detector and the first audio amplifier.

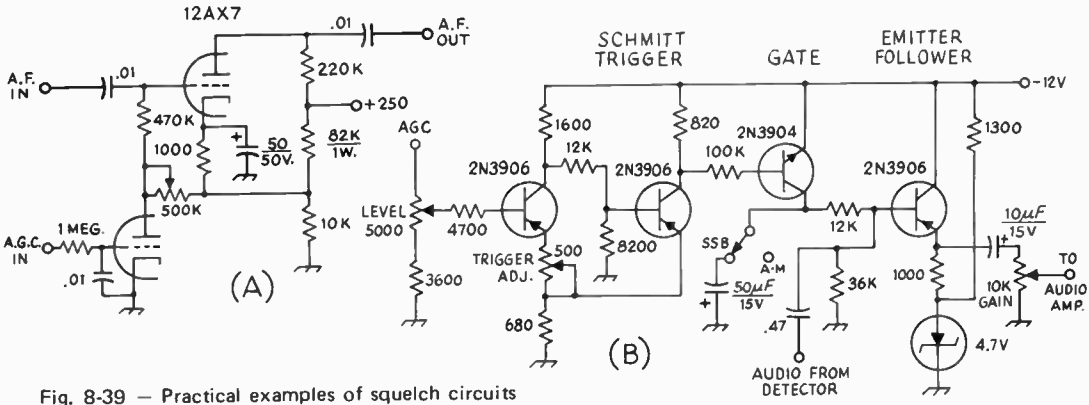

Fig. 8-39 — Practical examples of squelch circuits for cutting off the receiver output when no signal is present.

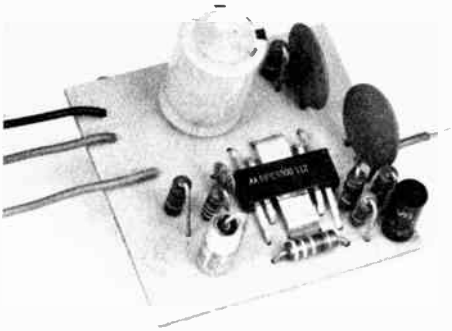

Fig. 8-40 — An audio module using an integrated circuit which delivers up to four watts of power output.

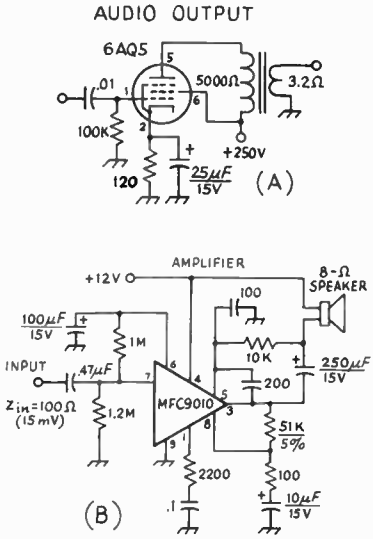

Fig. 8-41 — Audio output circuits using (A) a tube and (B) an IC.

AUDIO CIRCUITS

The output of a receiver detector is followed by one or more audio amplifier stages to bring the signal up to sufficient level to drive headphones or a loudspeaker. Suitable low-level amplifier stages are shown in Chapter 13. For speaker operation, an audio power stage, such as those shown in Fig. 8-41, is needed. At A, a 6AQ5 tube provides 2 watts of output, which is coupled to the speaker through a 5000/3.2-ohm audio transformer. The circuit at B employs an IC which incorporates the preamplifier and power amplifier in a single stage. The device delivers 2 watts – other similar ICs are available for power levels from 0.25 to 5 watts. No transformer is needed between the IC and the speaker.

TUNING A RECEIVER

CW Reception

In a receiver without selectivity, it doesn't much matter where the BFO is set, so long as it is within the pass band of the receiver. However, in a receiver with selectivity, the BFO should be offset, to give single-signal code reception. The proper setting of the BFO is easy to find. In the absence of incoming signals, it will be found that, as the BFO control is tuned, the pitch of the background noise will go from high to low and back to high again. The setting that gives the lowest pitch represents the setting of the BFO in the *center* of the pass band. Setting the BFO for a higher pitch (to the noise) will give more or less single-signal effect on incoming signals, depending upon the selectivity of the receiver. If the receiver uses a crystal filter that has a "rejection notch" or "phasing" control, setting the notch on the audio image will improve the single-signal effect.

The best receiver condition for the reception of code signals will have the first rf stage running at maximum gain, the following rf mixer and i-f stages operating with just enough gain to maintain the signal-to-noise ratio, and the audio gain set to give comfortable headphone or speaker volume. The audio volume should be controlled by the audio gain control, not the i-f gain control. Under the above conditions, the selectivity of the receiver is being used to best advantage, and cross modulation is minimized. It precludes the use of a receiver in which the gains of the rf and i-f stages are controlled simultaneously.

Single-Sideband Phone Reception

The receiver is set up for ssb reception in a manner similar to that for single-signal code reception, except that a suitable bandwidth for ssb (2 to 3 kHz) is used. The BFO *must* be set off to one side of the passband if good use is to be made of the selectivity. To determine which side to set it, remember this rule: A selective receiver can be set up for *lower*-sideband reception by setting the BFO so that there is little or no signal on the *low*-frequency side of zero beat when tuning through a steady carrier or cw signal. Lower sideband is customarily used on 3.9 and 7 MHz, upper on the higher frequencies.

Unless the receiver has an agc system suitable for ssb reception (fast attack, slow decay), the operator must be very careful not to let the receiver overload. If the receiver does overload, it will be impossible to obtain good ssb reception.

Run the receiver with as little rf gain as possible, consistent with a good signal-to-noise ratio, and run the audio gain high.

Carefully tune in an ssb signal using only the main tuning dial. When the voice becomes natural sounding and understandable, the signal is properly tuned. If the incoming signal is on lower sideband, tuning the receiver to a lower frequency will make the voice sound lower pitched. An upper-sideband signal will sound higher pitched as the receiver is tuned to a lower frequency.

If the receiver has excellent selectivity, 2.1 kHz or less, it will be desirable to experiment slightly with the BFO setting, remembering that each adjustment of the BFO calls for a similar adjustment of the main tuning control. If the selectivity is quite high, setting the BFO too far from the pass band will limit the incoming signal to the high audio frequencies only. Conversely, setting it too close will limit the response to the low audio frequencies.

A-m Phone Reception

In reception of a-m phone signals, the normal procedure is to set the rf and i-f gain at maximum, switch on the agc, and use the audio gain control for setting the volume. This insures maximum effectiveness of the agc system in compensating for fading and maintaining constant audio output on either strong or weak signals. On occasion a strong signal close to the frequency of a weaker desired station may take control of the agc, in which case the weaker station may disappear because of the reduced gain. In this case better reception may result if the agc is switched off, using the manual rf gain control to set the gain at a point that prevents "blocking" by the stronger signal.

When receiving an a-m signal on a frequency within 5 to 20 kHz from a single-sideband signal it may also be necessary to switch off the agc and resort to the use of manual gain control, unless the receiver has excellent skirt selectivity.

A crystal filter will help reduce interference in phone reception. Although the high selectivity cuts sidebands and reduces the audio output at the higher audio frequencies, it is possible to use quite high selectivity without destroying intelligibility. As in code reception, it is advisable to do all tuning with the filter in the circuit. Variable-selectivity filters permit a choice of selectivity to suit interference conditions.

An undesired carrier close in frequency to a desired carrier will heterodyne with it to produce a beat note equal to the frequency difference.

Spurious Responses

Spurious responses can be recognized without a great deal of difficulty. Often it is possible to identify an image by the nature of the transmitting station, if the frequency assignments applying to the frequency to which the receiver is tuned are known. However, an image also can be recognized by its behavior with tuning. If the signal causes a heterodyne beat note with the desired signal and is actually on the same frequency, the beat note will not change as the receiver is tuned through the signal; but if the interfering signal is an image, the beat will vary in pitch as the receiver is tuned. The beat oscillator in the receiver must be turned off for this test. Using a crystal filter with the beat oscillator on, an image will peak on the side of zero beat opposite that on which desired signals peak.

Harmonic response can be recognized by the "tuning rate," or movement of the tuning dial required to give a specified change in beat note. Signals getting into the i-f via high-frequency oscillator harmonics tune more rapidly (less dial movement) through a given change in beat note than do signals received by normal means.

Harmonics of the beat oscillator can be recognized by the tuning rate of the beat-oscillator pitch control. A smaller movement of the control will suffice for a given change in beat note than that necessary with legitimate signals. In poorly designed or inadequately shielded and filtered receivers it is often possible to find BFO harmonics below 2 MHz, but they should be very weak or nonexistent at higher frequencies.

ALIGNMENT AND SERVICE OF SUPERHETERODYNE RECEIVERS

I-f Alignment

A calibrated signal generator or test oscillator is a useful device for alignment of an i-f amplifier. Some means for measuring the output of the receiver are required See Fig. 8-40. If the receiver has a tuning meter, its indications will serve. Lacking an S meter, a high-resistance voltmeter or a vacuum-tube voltmeter can be connected across the second-detector load resistor, if the second detector is a diode. Alternatively, if the signal generator is a modulated type, an ac voltmeter can be connected across the primary of the transformer feeding the speaker, or from the plate of the last audio amplifier through a 0.1-μF blocking capacitor. Lacking an ac voltmeter, the audio output can be judged by ear, although this method is not as accurate as the others. If the tuning meter is used as an indication, the agc of the receiver should be turned on, but any other indication requires that it be turned off. Lacking a test oscillator, a steady signal tuned through the input of the receiver (if the job is one of just touching up the i-f amplifier) will be suitable. However, with no oscillator and tuning an amplifier for the first time, one's only recourse is to try to peak the i-f transformer on "noise," a difficult task if the transformers are badly off resonance, as they are apt to be. It would be much better to haywire together a simple oscillator for test purposes.

Initial alignment of a new i-f amplifier is as follows: The test oscillator is set to the correct frequency, and its output is coupled through a capacitor to the grid of the last i-f amplifier tube. The trimmer capacitors of the transformer feeding

Fig. 8-42 — Receiver alignment requires a stable signal source (a signal generator) and voltmeter. Alignment of communications receivers should be checked at least once a year.

the second detector are then adjusted for maximum output, as shown by the indicating device being used. The oscillator output lead is then clipped on to the grid of the next-to-the-last i-f amplifier tube, and the second-from-the-last transformer trimmer adjustments are peaked for maximum output. This process is continued, working back from the second detector, until all of the i-f transformers have been aligned. It will be necessary to reduce the output of the test oscillator as more of the i-f amplifier is brought into use. It is desirable in all cases to use the minimum signal that will give useful output readings. The i-f transformer in the plate circuit of the mixer is aligned with the signal introduced to the grid of the mixer. Since the tuned circuit feeding the mixer grid may have a very low impedance at the i-f, it may be necessary to boost the test generator output or to disconnect the tuned circuit temporarily from the mixer grid.

If the i-f amplifier has a crystal filter, the filter should first be switched out and the alignment carried out as above, setting the test oscillator as closely as possible to the crystal frequency. When this is completed, the crystal should be switched in and the oscillator frequency varied back and forth over a small range either side of the crystal frequency to find the exact frequency, as indicated by a sharp rise in output. Leaving the test oscillator set on the crystal peak, the i-f trimmers should be realigned for maximum output. The necessary readjustment should be small. The oscillator frequency should be checked frequently to make sure it has not drifted from the crystal peak.

A modulated signal is not of much value for aligning a crystal-filter i-f amplifier, since the high selectivity cuts sidebands and the results may be inaccurate if the audio output is used as the tuning indication. Lacking the agc tuning meter, the transformers may be conveniently aligned by ear, using a weak unmodulated signal adjusted to the crystal peak. Switch on the beat oscillator, adjust to the suitable tone, and align the i-f transformers for maximum audio output.

An amplifier that is only slightly out of alignment, as a result of normal drift or aging, can be realigned by using any steady signal, such as a local broadcast station, instead of the test oscillator. One's 100-kHz standard makes an excellent signal source for "touching up" an i-f amplifier. Allow the receiver to warm up thoroughly, tune in the signal, and trim the i-f for maximum output as noted on the S meter, or by tuning for peak af output.

Rf Alignment

The objective in aligning the rf circuits of a gang-tuned receiver is to secure adequate tracking over each tuning range. The adjustment may be carried out with a test oscillator of suitable frequency range, with harmonics from your 100-kHz standard or other known oscillator, or even on noise or such signals as may be heard. First set the tuning dial at the high-frequency end of the range in use. Then set the test oscillator to the frequency indicated by the receiver dial. The test-oscillator output may be connected to the antenna terminals of the receiver for this test. Adjust the oscillator trimmer capacitor in the receiver to give maximum response on the test-oscillator signal, then reset the receiver dial to the low-frequency end of the range. Set the test-oscillator frequency near the frequency indicated by the receiver dial and tune the test oscillator until its signal is heard in the receiver. If the frequency of the signal indicated by the test-oscillator calibration is higher than that indicated by the receiver dial, more inductance (or more capacitance in the tracking capacitor) is needed in the receiver oscillator circuit; if the frequency is lower, less inductance (less tracking capacity) is required in the receiver oscillator. Most commercial receivers provide some means for varying the inductance of the coils or the capacitance of the tracking capacitor, to permit aligning the receiver tuning with the dial calibration. Set the test oscillator to the frequency indicated by the receiver dial, and then adjust the tracking capacitance or inductance of the receiver oscillator coil to obtain maximum response. After making this adjustment, recheck the high-frequency end of the scale as previously described. It may be necessary to go back and forth between the ends of the range several times before the proper combination of inductance and capacitance is secured. In many cases, better overall tracking will result if frequencies near but not actually at the ends of the tuning range are selected, instead of taking the extreme dial settings.

After the oscillator range is properly adjusted, set the receiver and test oscillator to the high-frequency end of the range. First adjust the mixer trimmer capacitor for maximum hiss or signal, then the rf trimmers. Reset the tuning dial and test oscillator to the low-frequency end of the range, and repeat; if the circuits are properly designed, no change in trimmer settings should be necessary. If it is necessary to increase the trimmer capacitance in any circuit, more indicatance is needed; conversely, if less capacitance resonates the circuit, less inductance is required.

Tracking seldom is perfect throughout a tuning range, so that a check of alignment at intermediate points in the range may show it to be slightly off. Normally the gain variation will be small, however, and it will suffice to bring the circuits into line at both ends of the range. If most reception is in a particular part of the range, such as an amateur band, the circuits may be aligned for maximum performance in that region, even though the ends of the frequency range as a whole may be slightly out of alignment.

RECEIVER SELECTION

Beginning amateurs often find themselves faced with the dilemma of choosing between a home-built or store-bought receiver. Ideally, the new ham would elect to build his own complete amateur station, extracting the maximum value from the project through the knowledge he would gain about electronics. Additionally, home-built equipment is more familiar in detail to its owner than is a manufactured receiver. Thus, he can service his unit more rapidly and does not have to consult with the manufacturer about servicing details. If he wishes to add new circuits to the home-built receiver, or to modify existing circuitry, he need not worry about destroying the resale value of the equipment. For this reason the owner may be encouraged to experiment more with circuits, enhancing his overall knowledge of electronics.

Conversely, single-lot quantities of small parts are quite expensive these days, sometimes causing the constructor to spend more money on a simple home-built receiver than he would on a complicated commercially built unit. Modifications to factory-built ham gear generally degrade its resale value, discouraging the owner from making circuit improvements or improving his knowledge by experimenting.

The complexity of the receiver need only be such as to fill the operator's needs. Some very basic home-made receivers perform better than poorly designed multitube commercial units. The receivers described later in this chapter have been designed with the radio amateur's needs in mind, yet no unnecessary circuitry has been added simply to make them appear to be highly sophisticated. Many of the parts used in these receivers can be obtained from junked TV sets, war surplus stores, junked war surplus equipment, and from the workshop junk box. These possibilities should not be overlooked, for a considerable amount of money can be saved by garnering small parts in this manner.

The final decision whether to buy or build will of course be up to the operator. If you're only interested in being a "communicator," then a store-bought receiver will probably suffice. If, however, you want to experience the thrill of communicating by means of home-constructed equipment, and if you want to *learn by doing*, then home-made receiving equipment should be considered. Such forthright endeavors are often the stepping stones to higher plateaus – a satisfying career in electronics, or the needed background to qualify for radio schooling when in the military service. Just having a good working knowledge of one's own station is rewarding in itself, and such knowledge contributes to an amateur's value during public service and emergency operations.

AN ACTIVE FILTER

An audio filter is a receiver adjunct that can greatly improve the overall selectivity of a receiving system. Such a filter is particularly useful when operating an ssb transceiver on cw, as many of the inexpensive ssb rigs do not have i-f bandwidths narrow enough for comfortable cw operation. An audio filter can also be used as the primary selectivity element in a direct-conversion receiver. Large fixed-value inductors are normally used to achieve selectivity at audio frequencies. A more modern approach is to use resistor/capacitor networks combined with amplifiers to synthesize the characteristics of an inductor. When this "inductance" is resonated with a capacitor, an audio tuned circuit, called an active filter, results. The circuit shown in Fig. 8-44 was designed by WB2VXR. The two filter sections consist of a notch network and a high-gain operational amplifier. The RC network provides a notch frequency so that when it is connected between the input and output of the op amp the gain at the notch frequency is quite high – close to the open-loop gain of the active device – while at all other frequencies the gain is near unity. An attenuator is used at the input of each filter to reduce the gain, thus preventing cross-modulation effects. Also, the INVERTING terminal of each amplifier is loaded to insure stable operation.

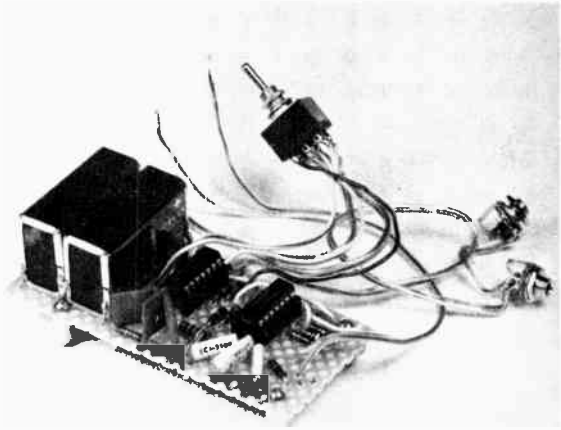

Fig. 8-43 – The active filter is built on a piece of electronic pegboard. The finished unit can be mounted inside a receiver.

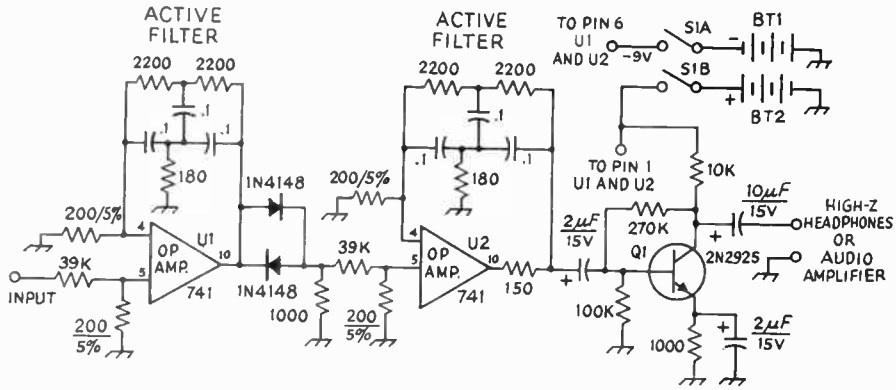

Fig. 8-44 — Schematic diagram of the audio filter. Resistors are 1/4-watt composition. Capacitors are ceramic or mylar, except those with polarity marked, which are electrolytic.
BT1, BT2 — 9-volt transistor-radio battery.
S1 — Dpdt toggle.
U1, U2 — Motorola MC1709 op amp.

The two active-filter sections are coupled through diodes which only pass peak voltages higher than the barrier potential of the diodes (approximately 0.6 V if silicon types are employed). On either side of the input-amplifier resonant frequency the voltage falls off quickly, and soon it goes below the level necessary to keep the diodes conducting. The overall effect is to improve the skirt selectivity. The 6-dB bandwidth is 62 Hz.

Assembly

Construction is not particularly critical, and the builder should encounter no problems if a straight-line layout is used. The original filter was built on Vector-board-like material. Considering the repetitive nature of the design, a printed-circuit board would be an ideal method of fabrication. The board could be mounted in an aluminum box with switches and input-output jacks. Since the unit only draws 5 mA of current, two small 9-volt batteries would provide suitable power. The only critical components in the filter are the resistors and capacitors in the notch networks. Five-per-cent-tolerance components were used, although satisfactory results might be expected if ten-per-cent capacitors were substituted. Total cost should be around $10, and the unit can be built in one or two evenings.

AN AUDIO FILTER FOR PHONE AND CW

Audio filters are useful in reducing the level of unwanted energy which lies above and below the speech-frequency range that is used in phone communications work. For cw operation, only a narrow frequency band around a selected beat tone need be passed. The filter circuit of Fig. 8-46 provides several degrees of selectivity. LC filters, using fixed-value capacitors and toroid coils, are selected by a front-panel switch for 200-, 400-, and 3000-Hz selectivity. The filter adaptor may also be switched out when high-fidelity audio response is desired.

Fig. 8-45 — The phone/cw audio filter. (The basic filter designs were done by K1PLP, and the unit shown was constructed by W1ETU.)

The Circuit

The cw filter is a 2-pole Butterworth type. A 840-Hz center frequency has been chosen, with a basic filter bandwidth of 200 Hz. The selectivity of this filter is broadened to 400 Hz when S1 switches in additional RC components. The phone filter is a 5-pole Chebishev design with a sharp cut-off at 3000 Hz. Any low-frequency components below 300 Hz are attenuated by the amplifier stages which have RC-coupling components chosen for a low-frequency roll-off.

Q1, a source follower, will match a wide variety of impedances to the input of the filters. After filtering, the audio signal is amplified to sufficient level for headphone use. Only high-impedance headphones, 1000 ohms or more, will work. If more output is desired, as would be required for a speaker or low-impedance "cans," an alternate output circuit may be used. A PA-237 IC amplifier, shown in Fig. 8-47 will deliver one to two watts of audio power with low distortion.

Construction

The audio filter is built into a Ten-Tec JW-7 enclosure. All parts, with the exception of the panel controls, are mounted on a homemade etched circuit board. Other assembly techniques may be used, if desired. S1 is mounted on a bracket near the center of the circuit board; short jumper wires connect the switch contacts to the board. Surplus telephone-type toroid coils are used in the filters. These inexpensive inductors are available through several sources that advertise in *QST* Ham Ads. L4 must be modified by adding 140 turns of No. 30 enamel wire to the basic 88-mH coil, raising the inductance to 120 mH. The toroids are bolted to the circuit board using No. 6 hardware and a large fiber washer over the top of the inductor. The 6-32 toroid mounting bolt should have spaghetti tubing over it to prevent the bolt threads from damaging the insulation on the coil windings. Use only enough tension to hold the inductors snugly in place.

Power may be taken from a battery or dc supply. An ac-operated supply is recommended if the PA-237 amplifier is used. This IC draws considerable current, so a battery would not enjoy a long life.

Using the Filter

To install the filter, use a short patch cord to connect J1 to the receiver **HEADPHONE** jack. Keep the receiver audio output as low as possible. Volume can be controlled with R1. On phone signals the phone filter will reduce the level of high-frequency hetrodynes and splatter. When using the 200-Hz sharp cw filter, a tendency to "ring" may be noticed. This is normal; the ringing effect can be minimized by keeping the audio input to the filter low.

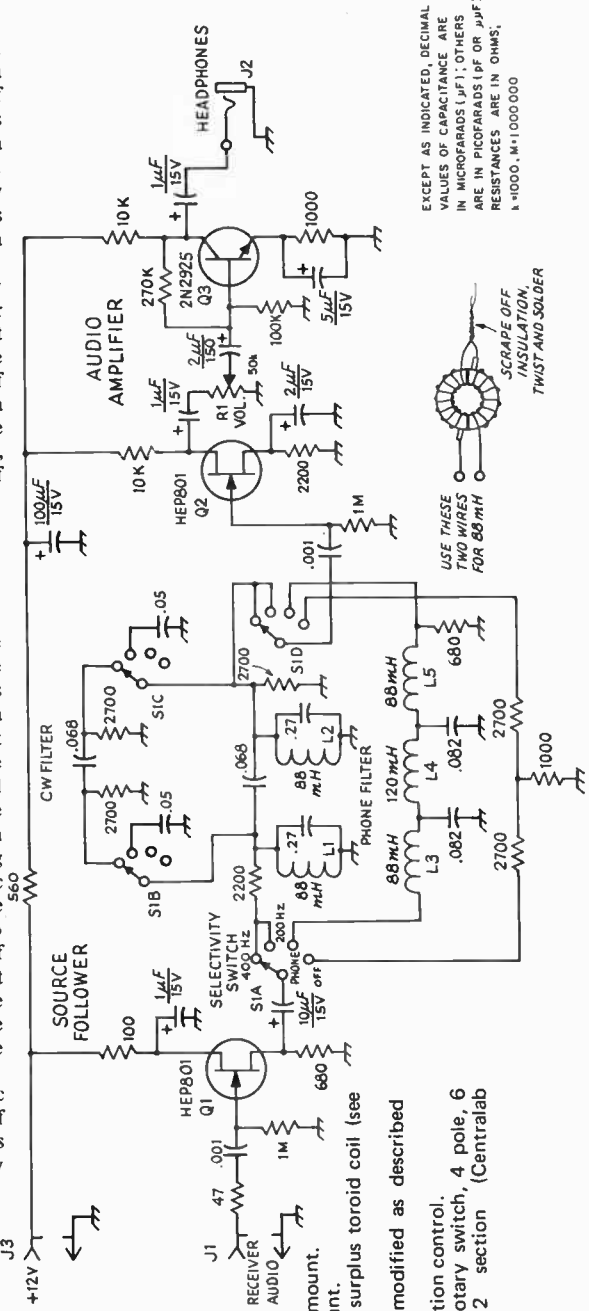

Fig. 8-46 — Schematic diagram of the audio filter. Resistors are 1/4- or 1/2-watt composition types. Capacitors with polarity marked are electrolytic, others are paper or ceramic.

J1, J3 — Phono jack, panel mount.
J2 — Phone jack, panel mount.
L1-L3, L5, incl. — 88-mH surplus toroid coil (see text).
L4 — 88-mH toroid coil modified as described in the text.
R1 — Linear-taper composition control.
S1 — Ceramic miniature rotary switch, 4 pole, 6 position (4 used), 2 section (Centralab PA-2011).

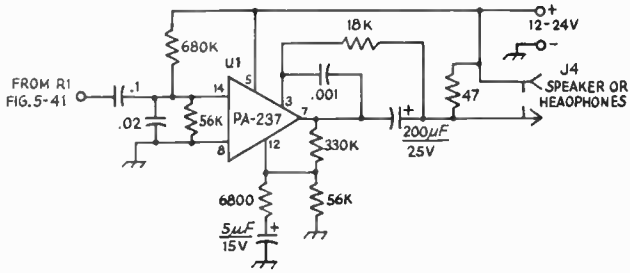

Fig. 8-47 — Alternate audio output circuit. Resistors are 1/4- or 1/2-watt composition, and capacitors are disk ceramic, except those with polarity marked, which are electrolytic. Unless otherwise noted, capacitance values are given in μF.
J4 — Phono jack, panel mount.
U1 — PA-237 General Electric integrated-circuit audio amplifier.

Fig. 8-48 — Inside view of the filter. The individual filter components are grouped in front of the switch. The input source follower, Q1, is located at the lower left, and the output amplifier is to the upper right. Care must be used in mounting the toroid coils so that no damage results to the windings (see text).

A "UNIVERSAL" HF RECEIVING CONVERTER

The receiving converter shown in Fig. 8-49 can be used as a "down converter" with an i-f output of 3.5 to 4 MHz, as an "up converter" with an i-f of 28 to 28.5 MHz, or as a front end for a multiband hf receiver. The tuned circuits at the front end will cover all of the hf amateur bands — 1.6 to 29.6 MHz. Thus, it is only necessary to select an appropriate output network for the mixer tuned circuits, for the crystal oscillator, and crystals for the desired frequency coverage. WWV or WWVH reception at 5, 10, 15 or 20 MHz may be added. With the band-switch arrangement shown, five amateur bands and one WWV frequency can be selected with S1. A second switch, S2, allows bypassing the converter. Suitable coil and capacitor combinations are given in the chart, Fig. 8-50, for all of the bands mentioned above. Other 500-kHz segments in the range from 1.6 to 30 MHz may be covered with an appropriate conversion crystal and oscillator-tank circuit.

Front view of the hf converter. The upper knob controls the PRESLECTOR capacitor, while the lower control is for the band switch. The small switch to the lower right disconnects the converter from the antenna line.

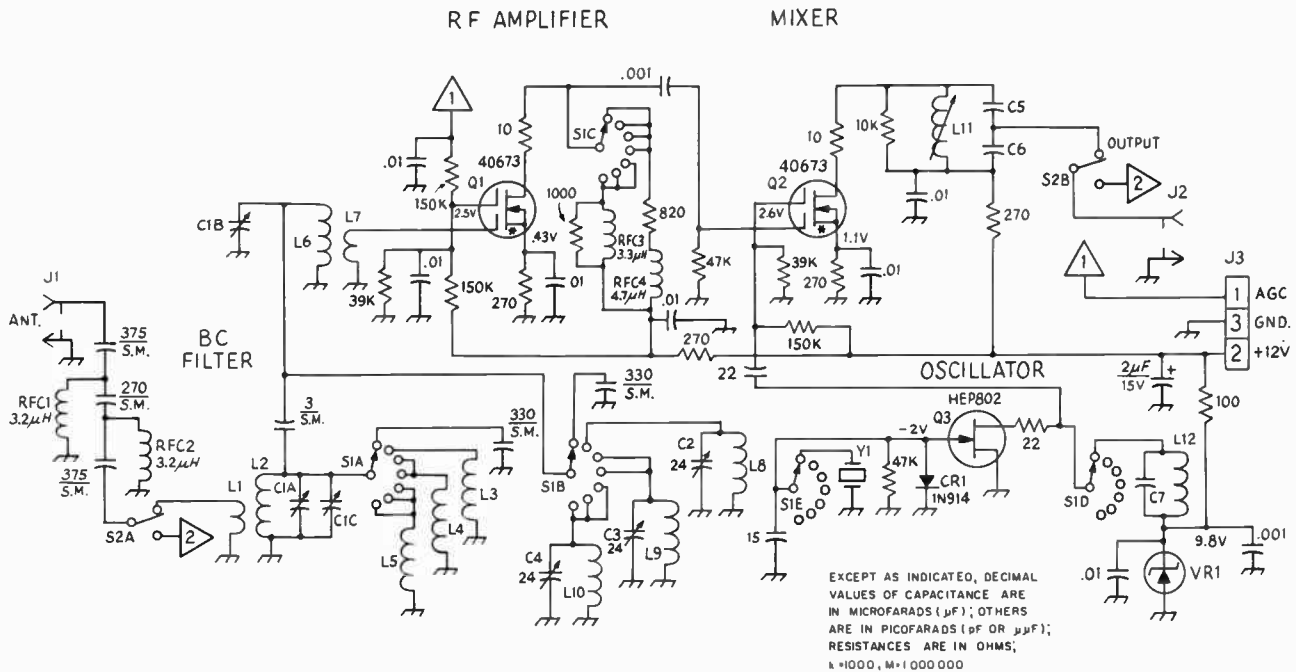

Fig. 8-49 — Schematic diagram of the hf converter. Capacitors are disk ceramic and resistors are 1/2-watt composition, unless otherwise noted. Capacitors with polarity marked are electrolytic. A template is available from the ARRL Technical Department for fifty cents and a large self-addressed stamped envelope.

C1 — Broadcast-type air variable, dual section, 365 pF per section, gear-reduction drive (J. W. Miller 565-8).

C2-C4, incl. — Air variable, pc mount (Johnson 189-0509-005).

C5, C6 — For 3.5 MHz, 45 and 470 pF, respectively. For 28 MHz, 15 and 150 pF. May be silver mica or disk ceramic.

C7 — See table (Fig. 8-50).

CR1 — High-speed silicon switching diode.

J1, J2 — Phono type, chassis mount.

J3 — 3-terminal strip, screw type (Millen E303).

L1 — 6 turns No. 28 enam. wound over L2.

L2, L6 — 52 turns No. 28 enam. on Amidon T-68-2 toroid core (Amidon Associates, 12033 Ostego St., North Hollywood, CA 91607).

L3, L8 — 46 turns No. 28 enam. wound on Amidon T-68-2 core.

L4, L9 — 20 turns No. 20 enam. wound on Amidon T-50-2 core.

L5, L10 — 13 turns No. 20 enam. wound on Amidon T-50-6 core.

L7 — 13 turns No. 28 enam. wound over L6.

L11 — For 3.5 MHz, 22-μH slug-tuned coil; for 28 MHz, 1.2-μH slug-tuned coil, pc mount (J. W. Miller 46A225CPC and 46A126CPC, respectively).

L12 — See table.

Q1, Q2 — RCA dual-gate MOSFET.

Q3 — Motorola JFET.

RFC1, RFC2 — Solenoid-wound rf choke, one turn removed (J. W. Miller 74F336AP).

RFC3 — Solenoid-wound rf choke (J. W. Miller 74F336AP).

RFC4 — Solenoid-wound rf choke (J. W. Miller 74F476AP).

S1 — Assembly consisting of one Centralab PA-302 index section and 5 Centralab PA-1001 1-pole, 11-position phenolic sections.

S2 — Dpdt toggle.

VR1 — Zener diode, 9.8 V, 1 W.

Y1 — See table.

		1.8 MHz	3.5 MHz	7 MHz	10 MHz	14 MHz	15 MHz	21 MHz	25 MHz	28 MHz	28.5 MHz
For 3.5–4 MHz i-f	Y1	5.8 MHz	N/A	11 MHz	14 MHz	10.5 MHz	11 MHz	17.5 MHz	29 MHz	32 MHz	32.5 MHz
	L12	7.5 µH		4.25 µH	2.5 µH	4.8 µH	4.25 µH	2.5 µH	1.5 µH	1.5 µH	1.5 µH
		46A826CPC	N/A	46A476CPC	46A276CPC	46A476CPC	46A476CPC	46A276CPC	46A156CPC	46A156CPC	46A156CPC
	C7	100 pF	N/A	39 pF	47 pF	39 pF	39 pF	18 pF	10 pF	5 pF	5 pF
For 28–28.5 MHz i-f	Y1	30.3 MHz	32 MHz	35.5 MHz	38 MHz	42.5 MHz	43 MHz	49.5 MHz	53 MHz	N/A	N/A
	L12	1.5 µH	1.5 µH	1.2 µH	1.0 µH	0.82 µH	0.82 µH	0.54 µH	0.55 µH	N/A	N/A
		46A156CPC	46A156CPC	46A126CPC	46A106CPC	46A827CPC	46A827CPC	46A576CPC	46A576CPC		
	C7	7 pF	5 pF	5 pF	5 pF	5 pF	5 pF	5 pF	5 pF	N/A	N/A

Fig. 8-50 — Table of values for the hf converter.

Design

The design of the converter has been optimized for strong-signal performance. All of the rf selectivity has been placed *before* the rf amplifier, insuring maximum rejection of out-of-band signals. The tuned circuits exhibit some loss, a limiting factor that determines the sensitivity of the converter. Average sensitivity is about 0.5 µV for a 10-dB signal-plus-noise-to-noise ratio (S + N/N).

A second dual-gate MOSFET, Q2, functions as the mixer. The amplified rf signal is fed to gate 1 of this device while gate 2 is coupled to the hf oscillator, Q3. The dual-gate MOSFET is an excellent transistor for mixer service as it has good conversion gain, provides isolation between the signal and oscillator inputs, and performs well when handling strong signals. The mixer has a low-*Q* output tank to permit nearly constant gain over a 500-kHz tuning range, even when a 3.5 to 4 MHz i-f is chosen. A capacitive divider provides the impedance transformation necessary to match 52-ohm cable. A short length of RG-58A/U is suitable as an interconnecting cable to the associated receiver.

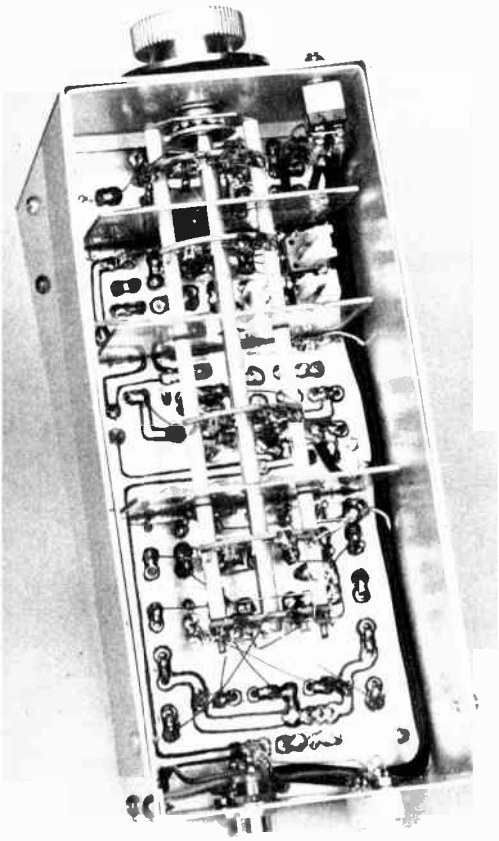

The bottom view reveals the shielding sections which provide a mount for the switch, as well as isolating the stages of the converter. These shields are made from 3 X 2-inch sections of double-sided circuit board. C2, C3 and C4 are mounted on the bottom side of the main board so that they can be reached easily for alignment purposes.

Construction

All components, except for the dual-section TUNING capacitor and the chassis-mount connectors, are installed on a 3 1/2 X 8-inch etched circuit board. A foil pattern and parts-placement template may be obtained from the ARRL Technical Department (see Fig. 8-49). A length of sheet-aluminum stock, bent to form a 3 1/2 X 8 X 2-inch rectangle (with a 1/4-inch lip around the top), provides a base for the pc board. Sheet-metal screws are used to secure the board to the base. The dual-section input-tuning capacitor, C1, is mounted on a small shelf supported by the 6 1/2 X 3 1/2-inch front panel – see the rear-view photograph. C1 has a built-in reduction drive which facilitates tuning on the 21- and 28-MHz bands. The frame of C1 contains two small trimmer capacitors, one for each section. The trimmer closest to the tuning shaft is retained, but the second one is disabled by removing the screw. Trimmers C2, C3 and C4 are used instead to align the front end for proper tracking. Three 25-pF miniature variable capacitors are employed and are mounted on the bottom side of the circuit board. Before installation, the two solder tabs on each capacitor are bent out at right angles to the capacitor body. Correct positioning of these capacitors is shown in the parts-layout diagram offered in Fig. 8-49.

A Single-Band Converter

Alignment

Before applying 12 volts to the converter, check to see that the transistors are properly oriented in their sockets and that no solder bridges are shorting the foil sections on the pc board. Check the resistance from J3 (pin 3) to ground; it should be 250 ohms or higher. A low-resistance reading indicates a fault which should be corrected before power is applied.

The hf crystal oscillator is aligned first. Some means of detecting the oscillator signal, such as an hf oscilloscope, general-coverage receiver or wavemeter, will be needed. Whatever the indicating device used, it should be loosely coupled to the oscillator tank circuit to be checked. Oscillation is started by varying the inductance of the tank inductor, moving the slug in the coil form. Best operation is achieved when the slug is set just above the point of maximum oscillator output, on the high frequency side of resonance. After an oscillator coil has been set, the 12-volt supply should be switched on and off a few times to see that the oscillator starts reliably. If not, try a setting that provides slightly less inductance.

Adjustment of the mixer-output circuit is the next alignment task. The mixer tank circuit is adjusted by moving the slug in L11, which should be set for maximum output noise when the receiver is tuned to the center of the i-f band to be used. A broad peak will be obtained. This is normal and desirable.

Peaking the front-end circuits requires a weak-signal source; a signal generator or on-the-air signal may be employed. Align the 40-meter band first. Using C1, peak the incoming signal for maximum S-meter reading on the associated receiver. Next, peak C1C, the trimmer that is part of the TUNING capacitor, and C2. Then, rotate C1 and observe that only one peak occurs on the S meter. If a double peak is obtained, repeat the adjustments of C1C and C2. Then align C3 and C4 on the 20- and 10-meter bands, respectively. (Don't move the setting of C1C during these adjustments.)

On the 160-, 40- and 10-meter bands the oscillator operates at a higher frequency than does the incoming signal. The receiver tunes in the reverse direction, when using an 80-meter i-f. Thus, 7 MHz is heard at 4 MHz and 7.5 MHz at 3.5 MHz.

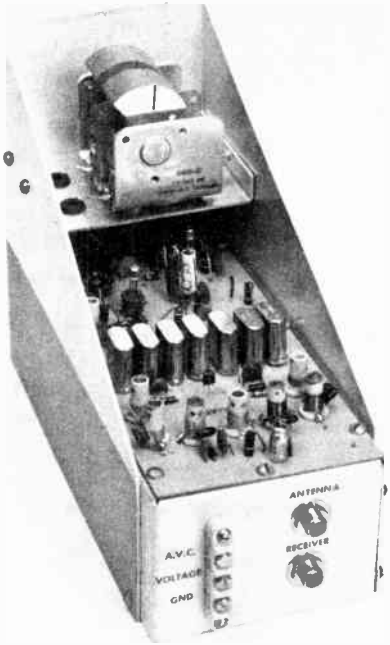

Fig. 8-51 — The front-end tuning capacitor, C1, is mounted on a small shelf just above the toroid coils. The rear section of the main circuit board contains the crystal oscillator. The crystals are soldered directly into the board. The capacitors that go with the oscillator-tank coils are connected across the terminals of the pc-mount coil forms. Most of the chokes and resistors are mounted vertically to save space.

Because the 20- and 15-meter bands have the oscillator set on the low-frequency side, they will tune in the conventional manner. If the values shown in the chart are chosen for a 28-MHz i-f, all bands will tune from 28.5 to 28 MHz, as the signal is always lower in frequency than that of the hf crystal oscillator.

A SINGLE-BAND CONVERTER

THE CONVERTER described here, when used with an a-m broadcast receiver, provides for single-band reception of ssb, a-m, and cw signals. An automobile or home radio tuned to 1600 kHz

Fig. 851A — The single-band converter constructed for 20-meter coverage. The top of the chassis has an aluminum plate added to provide a rigid enclosure. A short length of plastic sheathing from Romex electrical wire is cemented atop the mounting bracket to cushion the converter away from the automobile dashboard. The tuning dial, calibrated from 0 to 100, has a 6-to-1 tuning ratio.

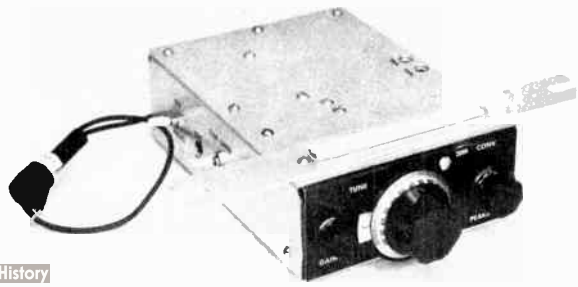

serves as the i-f amplifier, detector, and audio stages. Performance of the converter and broadcast-receiver combination is comparable to that of a good short-wave receiver. The converter may be built to cover any of the five hf amateur bands.

The instrument is completely solid-state in its construction and uses transistors which are available at most electronic supply outlets.

In the automobile, power is obtained from the 12-volt system by connecting either to the cigarette lighter socket or to the ignition switch. When used at home, a 9- or 12-V ac-operated supply would be most convenient, although a 9-V transistor-radio battery could be used. Current drain of the converter is 12 mA at 9V or 28 mA at 12V.

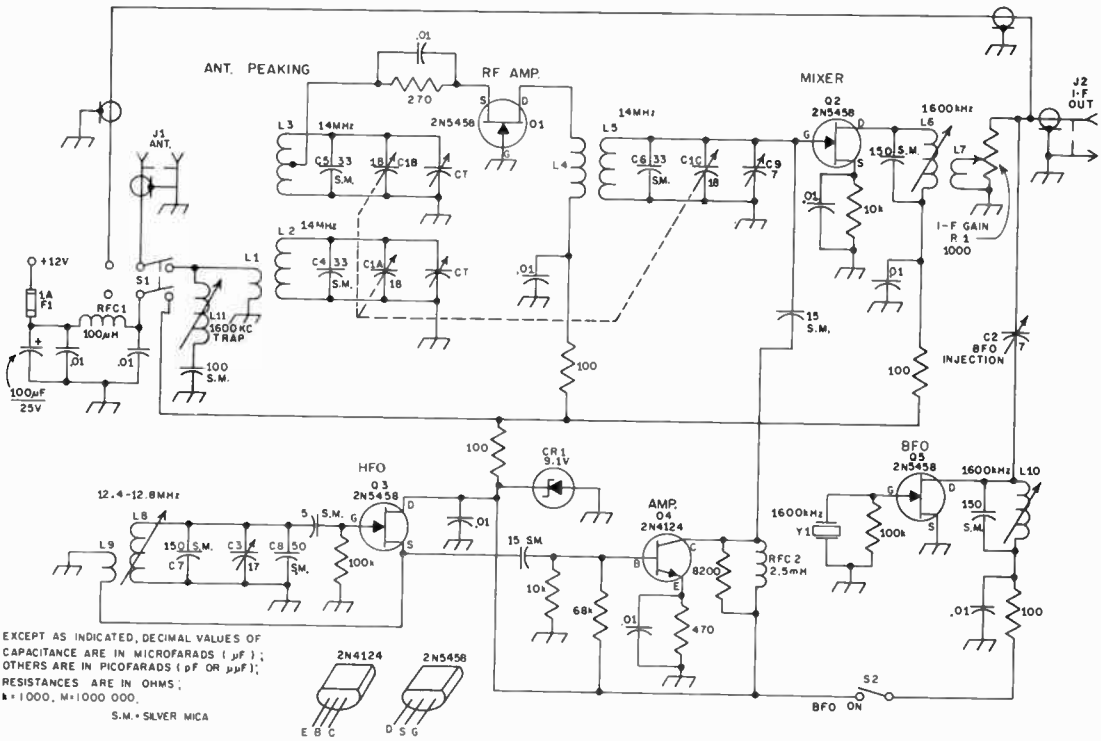

Fig. 8-51B — Schematic diagram of the single-band converter. Unless otherwise indicated, resistors are 1/2-watt 10-percent tolerance. Parts values given in the diagram and in the list below are for coverage of the 20-meter amateur band. See Table I for parts data on other bands.

C1 — Three-section air variable, 5.7-20.7 pF each section (Miller 1460 or equiv.).
C2, C9 — Compression trimmer, 0.9-7 pF.
C3 — Air variable, double bearing, 5-17 pF (made by modifying a Millen MK21015 — remove 1 stator and 1 rotor plate).
C4-C8, incl. — For reference in Table I.
C_T — Trimmers associated with sections of C1.
CR1 — Zener diode, 9.1-V 400-mW (RCA KD2504 or equiv.).
F1 — In-line fuse.
J1 — Motorola-type automobile-radio jack (Archer 274-738 or equiv.).
J2 — Phono jack.
L1 — 3 turns small hookup wire wound on ground end of L2.
L2 — 2.2 µH (19 turns Polycoil No. 1731 or equiv. stock 1/2-inch dia, 24 turns per inch).
L3 — 2.2 µH (19 turns Polycoil No. 1731 or equiv. stock). Tap at 6 turns from ground end.
L4 — 18 turns No. 22 enam., scramble-wound over ground end of L5.
L5 — 2.1 µH (18 turns Polycoil No. 1731 or equiv. stock).
L6, L10 — Slug-tuned inductor, 45-100 µH (Miller 42A825CBI or equiv.).
L7 — 15 turns small-dia hookup wire wound on B+ end of L6.
L8 — Slug-tuned inductor, 0.68-1.25 µH (Miller No. 42A106CBI or equiv.).
L9 — 2 turns small-dia hookup wire wound over ground end of L8.
L11 — Slug-tuned inductor, 88.5-120 µH (Miller 21A104RBI or equiv.).
Q1, Q2, Q3, Q5 — Silicon N-channel JFET, 310 mW, general purpose rf or high-speed switching. 2N5458 (Motorola MPF104) or equiv.
Q4 — Silicon npn transistor, 310 mW, rf or high-speed switching (2N4124 or equiv.).
R1 — Subminiature linear-taper carbon control, 1000 ohms (Mallory type MLC13L or equiv.).
RFC1 — Rf choke, 100 µH (Miller 70F104AI or equiv.). RFC2 — Rf choke, 2.5 mH (Miller 70F253AI or equiv.).
S1 — Miniature toggle, dpdt.
S2 — Miniature toggle, spst.
Y1 — 1600-kHz crystal (Int. Crystal type GP-05 or equiv.).

The Circuit

The schematic diagram of the converter is given in Fig. 8-51B. Parts values, as shown, give generous coverage of the 20-meter band, 14.0 to 14.4 MHz. For coverage of the other bands, the four tuned circuits in the rf-amplifier, mixer, and heterodyne-frequency oscillator stages must be altered. See Table 8A.

A dpdt switch, S1, is used to switch power and antenna connections to the converter. When turned off, this switch connects the antenna to the a-m radio for regular broadcast reception. Inside the converter, CR1 regulates voltage applied to the HFO stage at 9.1 volts. This regulation prevents frequency changes which might otherwise be caused by changing automobile-engine speeds and consequent voltage fluctuations.

To obtain good rf selectivity, double-tuned antenna-peaking circuits, L2 and L3 and their associated components, are used. These two coils are coupled radially, rather than axially, to facilitate grounding one end of each coil.

For 20-meter reception, the HFO operates over the frequency range between 12,400 and 12,800 kHz and mixes with the incoming rf signal to produce a 1600-kHz signal at the output of Q2. S2 is used to turn the BFO on or off. The BFO is left off for reception of short-wave a-m signals, and is energized for reception of ssb and cw signals. Operating at 1600 kHz, the BFO provides a convenient marker for tuning the broadcast receiver to the converter output frequency. Depending on the selectivity of the broadcast receiver, it may be necessary to vary the tuning slightly above or below the 1600-kHz marker to get clear cw reception or to improve reception of ssb signals on the proper sideband.

Construction

The converter is built into a Bud AC-402 chassis measuring 7 x 5 x 2 inches. The layout is shown in Fig. 8-51C. Compartments for the various stages are made by using circuit-board material. Portions of some of the boards contain etched circuit patterns, so little point-to-point wiring is visible. Unetched foil at the extremities of the boards provides shielding from circuits in other compartments. Aluminum angle brackets join the boards where they meet at right angles.

The compartment for the BFO stage, to the left and below the center of the chassis (Fig. 8-51C) is made on three sides with aluminum sheet stock bent as shown. The circuit board forms the fourth side of this compartment, and the assembly is secured to the chassis with an aluminum strap.

C1, the triple-section variable capacitor, is affixed to the right edge of the chassis as shown in Fig. 8-51-C. To the rear of this capacitor, nearer the bottom of the photo, are the antenna peaking circuits, L1 through L3 and associated components. In the photograph L3 hides L2, as they are mounted one above the other on the circuit board. A space of approximately 1/4 inch was left between these coils. Other construction details can be gleaned from Fig. 8-51C, and further information is contained in its caption.

Adjustment and Operation

For alignment of the converter, connect it to the broadcast receiver, and attach a suitable antenna. Energize both the converter and the receiver, and turn on the converter BFO. Tune the receiver to approximately the 1600-kHz point, searching for the BFO marker. When located, the marker will quiet the receiver. If the marker cannot be found, adjustment of L10 may be in order to start oscillation. If the marker still cannot be found, chances are that the receiver frequency-tracking adjustments are not correct and the receiver is not tuning to 1600 kHz.

Once the marker is found, leave the receiver tuning set and turn the BFO off. Advance the i-f gain control, and adjust C1 from its fully meshed position for maximum receiver noise. (You probably will hear signals at this point, too.) Peak

TABLE 8A

Band	Freq. (MHz)	HFO Range (MHz)	L1 See Note 2	L2, L3	L4 See Note 3	L5	L8	L9 See Note 4	C3 Double-bearing air-variable	C4, C5, C6	C7 plus C8 total cap See Note 5	C9
80	3.5 – 4	5.1 – 5.6	6 t	8.4 µH (36 turns B & W 3008 or equiv. stock, 5/8 in. dia., 32 t p.i.)	36 t. No 30 enam	8.4 µH See data for L2	Slug tuned 1.5 – 1.87 µH (Miller 42A156CBI or equiv.)	4 t	6.1 – 104.5 pF (Millen MK21100 or equiv.)	Omit	450 pF	Omit (trimmer provided on C1)
40	7 – 7.3	5.4 – 5.7	5 t	4.2 µH (33 turns Polycoil 1731 or equiv. stock, 1/2 in. dia., 24 t p.i.)	33 t. No 30 enam	4.2 µH See data for L2	Slug tuned 1.5 – 1.87 µH (Miller 42A156CBI or equiv.)	3 t	3.5 – 56.0 pF (Millen MK21050 or equiv.)	100 pF	460 pF	Same as for 20 meters
20	14 – 14.4	12.4 – 12.8	See Fig. 2									
15	21 – 21.45	19.4 – 19.85	2 t.	1.6 µH (19 turns Polycoil 1730 or equiv. stock, 1/2 in. dia., 16 t p.i.)	16 t. No 22 enam	1.3 µH (16 t same stock as L2)	Slug tuned 0.47 – 0.587 µH (Miller 40A477CBI or equiv.)	2 t.	Same as for 20 M.	20 pF	130 pF	Same as for 20 meters
10	28 – 29.7	26.4 – 28.1	2 t	1.1 µH (14 turns Polycoil 1730 or equiv. stock, 1/2 in. dia., 16 t p.i.)	12 t. No 22 enam	0.9 µH (12 t same stock as L2)	Slug tuned 0.33 – 0.413 µH (Miller 40A337CBI or equiv.)	2 t	Same as for 20 M.	10 pF	90 pF	Same Same as for 20 meters

Note 1: For 40-, 15-, or 10-meter coverage, C1 is the same as for 20-meter coverage. For 80-meter reception use a 365-pF 3-gang variable capacitor such as Miller 2113. This capacitor is physically larger than the Miller 1460, and the layout of the circuit components must be altered accordingly.

Note 2: L1 is wound with small-dia hookup wire over ground end of L2.

Note 3: L4 is wound over ground end of L5.

Note 4: L9 is wound with small-dia hookup wire over ground end of L8.

Note 5: C7 and C8 are connected in parallel across C3. Reducing the value of fixed capacitance and retuning L8 accordingly will increase the range over which the HFO operates.

Note 6: For the band of operation, L3 is tapped from the ground end as follows: 80 — 10 turns; 40 — 9 turns; 15 — 5 turns; 10 — 4 turns.

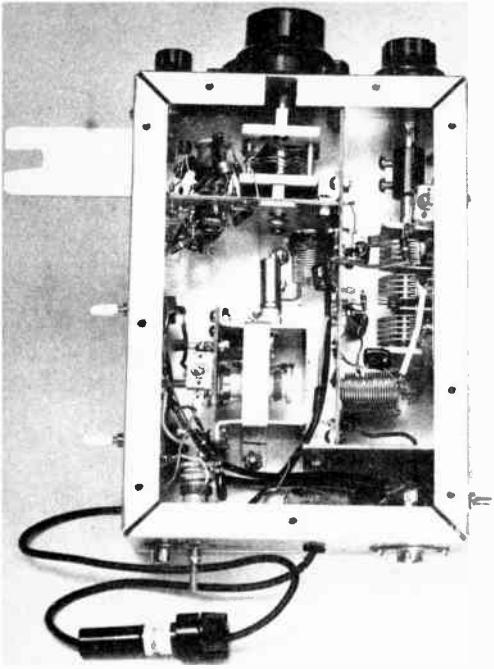

Fig. 8-51C — The converter with its bottom cover removed for a peek inside. The compartment in the upper left corner of the photograph houses the HFO stages, with the antenna-peaking and rf amplifier stages located along the right side of the chassis. Protruding from the back of the HFO circuit board are coils L4 and L5, and to their left Y1 is visible. L6 and L7 are located near J2 in the lower left corner of the chassis, while L11 is hidden by J2 in the lower right corner.

the amplitude of the noise by adjusting L6. If the broadcast radio has an antenna trimmer, adjust it, as well, for maximum noise. If an interfering 1600-kHz broadcast signal is heard, null it out with L11.

Next, the frequency range of the HFO must be adjusted.See Table 8A for the band of operation. A general-coverage receiver or a wavemeter with reliable calibration will aid in this task, although an amateur-band-only receiver will suffice. Adjust C3 so its plates are fully meshed. Then adjust L8 until the frequency of oscillation is set for the low end of the HFO range. If the HFO fails to oscillate, reverse the winding connections on L9. Then adjust C3 to its opposite extreme. The frequency of oscillation now should be beyond the high-frequency end of the range. If the means are not readily available for checking the frequency of oscillation, adjustment of the HFO range can be made by listening to received signals. The approximate frequencies of these signals can be determined from an amateur receiver, and L8 and C3 in the converter adjusted accordingly to give full band coverage. Some amateurs adjust the HFO range in their receivers by listening to markers from a 100-kHz calibrator, but when using this method it is very easy to end up having the receiver tuned 100 or 200 kHz away from the intended frequency.

Now adjust the trimmer capacitors associated with the three sections of C1. First, tune the converter to a signal near the high end of the frequency range, and adjust C1 for maximum signal amplitude. The BFO may be either on or off for these adjustments. Then adjust each of the three trimmers for maximum signal strength. Repeat these adjustments a few times, to assure that all three tuned circuits peak simultaneously at a given setting of C1.

The last adjustment is the BFO injection. Tune in a cw or an ssb signal and adjust the i-f gain control for a pleasing level. Now adjust C2 for a clean-sounding signal. Too little injection will cause the receiver to "pump," giving the signal a quality best described as "mushy." Too much injection will reduce the amplitude of the signal.

Operation of the converter is simple. Turn on the broadcast receiver and the converter. Turn on the BFO and use its frequency as a marker for proper tuning of the receiver to 1600 kHz. With C3, tune the converter to the desired signal, and tune C1 to peak the antenna circuits.

A DIRECT-CONVERSION RECEIVER FOR BEGINNERS

Fig. 8-52 — Front view of the direct-conversion receiver. The panel is finished in machine gray spray paint. The two controls are main tuning and audio gain.

This receiver tunes from 3.5 to 4 MHz in its basic form, and covers the 40-, 20-, 15-, and 10-meter bands through the use of plug-in converters. Despite its simplicity and modest cost it performs as well as many medium-priced superheterodyne receivers. It is intended primarily for the reception of ssb and cw, but can also be used to receive a-m signals by tuning it to zero beat with the incoming signal. It can be powered by 10 size-C flashlight cells — series connected — by an ac-operated 12-volt supply of the type described in Chapter 5, or from the cigar lighter of any negative-ground 12-volt automobile.

A quick price analysis showed that the main section of the receiver costs approximately $26, minus the circuit board, if all components are purchased brand new. The converters cost approximately $12 each, less circuit board, when

new parts are purchased. Naturally, the work-shop "goodie" trove should provide many of the parts required, thus greatly reducing the total cost.

Circuit Information

Although the circuit of Fig. 8-53 may appear somewhat involved, it isn't. There are only four stages in the main receiver section – an integrated-circuit detector, U1, a JFET BFO, a bipolar-transistor audio amplifier, and an IC audio power amplifier. The input tuned circuit, consisting of L2 with C1, C2 and C3A, covers the range 3.5 to 4 MHz. Light coupling is used between the tuned circuit and the detector input to minimize spurious responses from strong out-of-band signals, especially those of commercial broadcast stations.

The BFO operates over the same range as the detector, and the two stages are gang-tuned by means of C3. The BFO signal from Q2 beats against the incoming signal to furnish a beat note for cw reception and to provide a carrier for copying ssb signals. Zener-diode voltage regulation is used in the drain supply to Q2, to enhance the stability of the receiver.

Audio output from the detector is passed through a 2.5-kHz bandpass filter which uses two telephone-type surplus 88-mH toroids.

An IC af amplifier, U2, is connected after the preamplifier stage, Q1, to boost the signal to loudspeaker level. A closed-circuit jack, J3, permits the phones to disconnect the speaker when they are plugged in. J5 allows the cabinet-mounted speaker to be disconnected when servicing the receiver.

A polarity-guarding diode, CR2, prevents damage to the circuit components in the event the power supply is connected for the wrong polarity. It will conduct when positive voltage is applied to its anode, but is nonconducting with negative voltage.

A band switch, S1, Fig. 8-53, permits selecting the 3.5-MHz range, or one converter of the operator's choice. Twisted-pair insulated hookup wire should be used for all wiring in this part of the circuit. An rf gain control, R13, will be used to prevent receiver overloading in the presence of strong signals.

Plug-in converters are attached to the receiver at J2 for 40-, 20-, 15-, and 10-meter operation. This results in a double-conversion arrangement, the main portion of the receiver being a tunable i-f system. Diodes CR3 and CR4 conduct at approximately 0.6 volt to offer burn-out protection to U1 during 80-meter reception. When operating the four higher bands the diodes protect the mixer FET in the converter being used. This precaution is necessary when the receiver is to be used near or in combination with a transmitter.

The circuit for the converters is shown in Fig. 8-55. Each consists of an FET mixer, Q3, and a fixed-tuned FET oscillator, Q4. It is very stable and is easy to adjust. Zener-diode regulation is used on the drain-supply line to the converter. The Zener diode and dropping resistor connect to the circuit in a like manner to that used at Q2 in the main receiver. The two components are connected to the converter socket, J2, under the main chassis, at pin 2.

Construction Notes

A hand-made aluminum chassis and panel are used as a foundation for the receiver. Since the chassis is 2 inches high, 11 inches wide, and 7 inches deep, a Bud AC-407 can be substituted. The panel is 11 inches long and 4-1/2 inches high.

A home-made cabinet encloses the receiver. It is fashioned from 1/16-inch thick aluminum sheet, and the 4-inch, 8-ohm speaker is mounted on the top surface of the case. A piece of perforated aluminum protects the speaker cone from damage. Grille cloth can be added to prevent dust and sand from entering the opening. There is no reason why a wooden cabinet could not be used with this receiver. For shielding, if this is done, the inner walls of the cabinet can be lined with copper flashing or furnace-ducting metal.

Those wishing to make a "trans-receiver" might consider adding the etched-circuit version of the 2-watt solid-state transmitter described in Chapter 6. There is room to mount it on the chassis between R13 and the plug-in converter. A B+ and antenna changeover switch can be added to the panel if this is done.

Though etched-circuit construction is shown here, there is no reason why point-to-point wiring cannot be used. (Examples of both wiring methods are shown in Fig. 8-54. The circuits are the same, one converter being built for 40 meters and the other for operation in the 20-meter band.) The integrated circuit, U1, is mounted on the foil side of the circuit board by means of an 8-pin integrated-circuit socket (Motorola HEP 451). The pins of the socket are bent out at right angeles from the base, then are soldered to the foil elements of the board. The IC can be soldered directly to the board if desired, but the use of a socket is recommended to prevent damage from heating during installation.

Toroidal inductors L3 and L4 are attached to the main circuit board by means of 6-32 × 1-inch machine screws and hex nuts. A small square of insulating board is used on each toroid as a retainer. Spaghetti tubing is slipped over each mounting screw so that the screw threads cannot damage the coil windings. Similarly, the rf toroids, L2 and L5, are mounted on an under-chassis aluminum bracket, but each coil has two squares (top and bottom) of insulating board to hold it in place. The bracket (see photo) is made of aluminum sheet, 3 inches wide and 1-3/4 inches high. A 1-inch wide aluminum divider helps isolate the oscillator coil, L5, from the detector coil, L2. Though the toroidal inductors are self-shielding, the divider was added to help reduce capacitive coupling.

A transistor socket is used for Q2. Q1 is soldered directly to the circuit board, but a socket can be put there if the builder wishes to use one.

Trimmer C1 is mounted on the frame of C3A between the rotor lug and the stator rod. Though an E. F. Johnson 167-52 is used for C3 in this model almost any miniature 50-pF split-stator

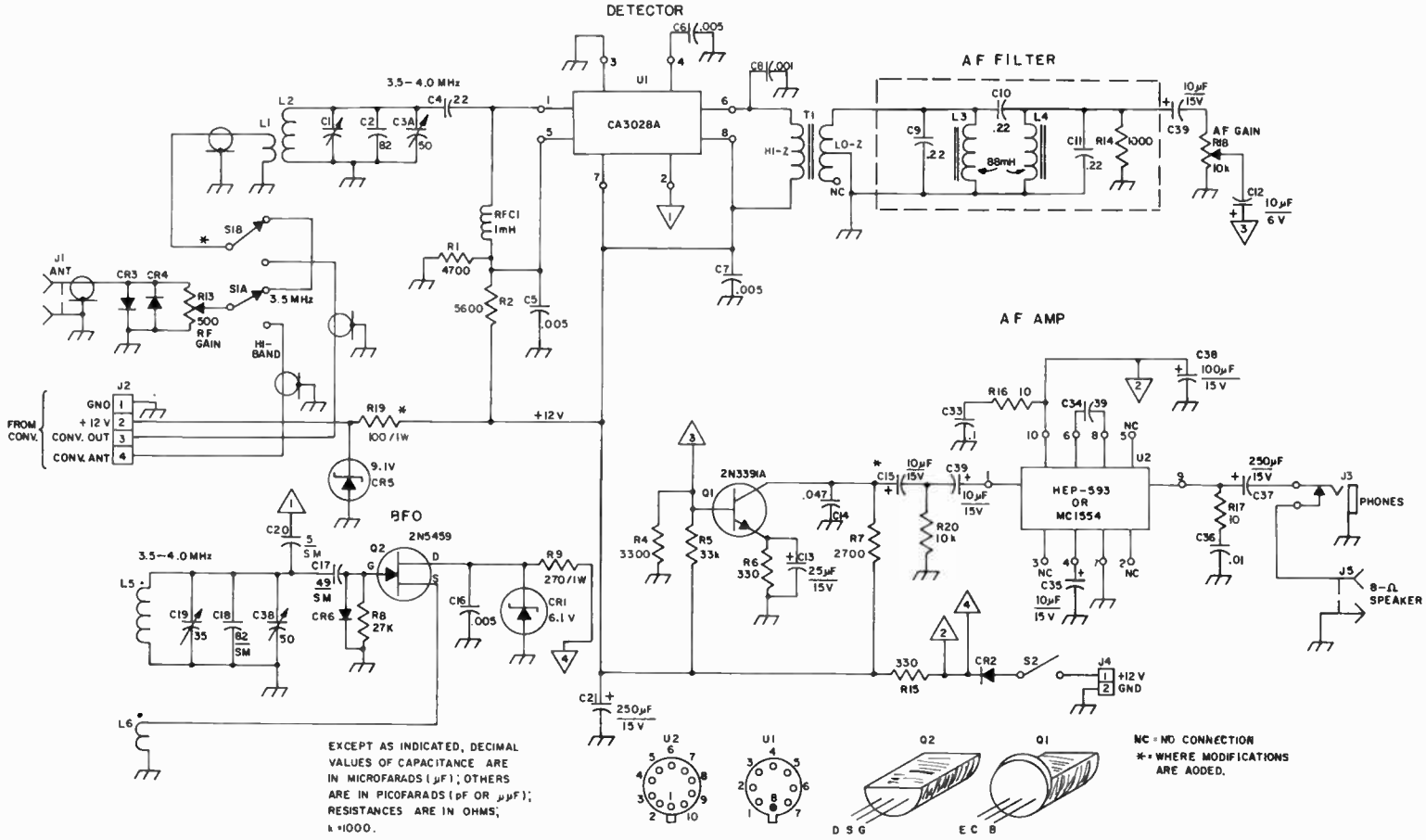

Fig. 8-53 — Schematic diagram of the main portion of the receiver. Capacitors with polarity marking are electrolytic. Other fixed capacitors are disk ceramic unless marked SM (silver mica). C9, C10, and C11 are dipped polyester types. Fixed resistors are 1/2-watt composition unless noted otherwise. Component numbers not listed below are for identification purposes on the circuit board.

C1 — 3-30-pF compression trimmer.
C3 — Split-stator variable, 50 pF per section (see text).
C9-C11, incl. — Dipped polyester, 100 volts (Cornell-Dubilier type DMF suitable).
C19 — 7-35-pF ceramic trimmer (Centralab type 827-D or similar).
CR1 — Zener, 6.1 volts, 1-watt (Motorola HEP 103).
CR2 — Silicon top-hat rectifier, 50 PRV, 100 mA or higher (Motorola HEP-161 suitable).
CR3, CR4 — Small-signal silicon switching diode (1N465A or similar).
CR5 — Zener diode, 9.1 volt, 1 watt (Motorola HEP-104 or equiv.).
CR6 — 1N914 switching diode (connect from gate to ground on circuit board).
J1 — SO-239-type chassis connector; phono jack also suitable.
J2 — 4-pin tube socket.
J3 — single-circuit phone jack.
J4 — Male two-terminal chassis connector (Switchcraft 5501MP or similar).
J5 — Phono jack.
L1 — 5 turns No. 24 over L2.
L2, L5 — 36-inch length of No. 24 enam. on Amidon* T-68-2 toroid core; 45 turns total.
L3, L4 — 88-mH toroid (see QST Ham Ads for suppliers).
L6 — 14 turns No. 24 enam. wound over L5 to occupy entire circumference of core. *Observe polarity.*
P1 — Base from discarded 4-pin tube, or jumper made from two banana plugs.
Q1 — Low-noise af preamplifier transistor, npn silicon, high beta rating.
Q2 — N-channel JFET, 30-MHz rating or greater (Motorola 2N5459 or HEP 801).
R13 — Linear-taper, 500-ohm control.
R18 — 10,000-ohm audio-taper carbon control.
RFC1 — 1-mH rf choke (Millen J300-1000 or similar).
S1 — Dpdt toggle switch.
S2 — Part of R18.
T1 — 10,000-ohm primary to 1000-ohm secondary driver (Lafayette Radio 99T6124; use 1/2 of secondary).
U1 — RCA CA3028A integrated circuit.
U2 — Motorola integrated circuit, HEP-593 or MC1554.

* Amidon Associates, 12033 Otsego St., North Hollywood, California, 91607.

Band (MHz)	*Osc. (MHz)*	*L7 (turns)*	*L8 (μH)*	*Miller No.*	*C22 (pF)*	*L10 (μH)*	*Miller No.*	*C28 (pF)*	*C29 (pF)*
7–7.5	11.0	7	9.4–18.7	42A155CBI	33	1.7–2.7	4503	220	150
14–14.5	10.5	3	3.6–8.5	42A686CBI	25	1.7–2.7	4503	220	150
21–21.5	17.5	3	2.12–4.10	42A336CBI	15	1.7–2.7	4503	100	100
28.5–29	25	3	1.3–2.7	42A226CBI	15	0.44–0.76	4501	100	100

Capacitors C28 and C29 should be silver mica for best stability. Miller parts can be ordered from J. W. Miller Co., 19070 Reyes Ave., Compton, CA 90221, or from authorized J. W. Miller distributors. L7 is closewound over ground end of L8 using No. 24 enam. wire.

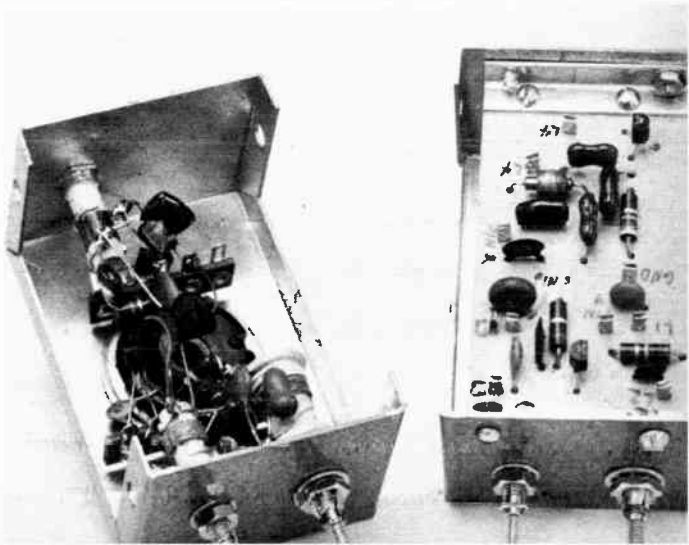

Fig. 8-54 — Photo of two of the plug-in converters showing how point-to-point wiring compares to etched-circuit construction. The converters are built in 3 1/4 X 1 5/8 X 2 1/8-inch Miniboxes. The three slug-tuned coils mount on the ends of the boxes. In the circuit-board version, the coils are below the board.

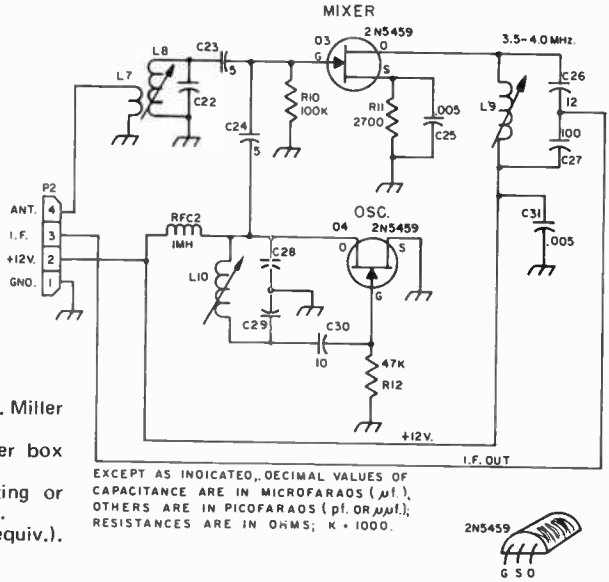

Fig. 8-55 — Schematic diagram of the plug-in converters. These units can be used with any communications receiver that covers the 80-meter band. Capacitors are the disk ceramic unless marked SM (silver mica). Numbered components not listed below are for circuit board layout identification.

C22, C28, C29 — See coil table.
L7, L8, L10 — See coil table above.
L9 — 120 to 190-µH variable inductor (J. W. Miller 4512).
P2 — 4-prong plug mounted on converter box (Amphenol 86-CP4 or equiv.).
Q3, Q4 — N-channel JFET, 30-MHz rating or higher. (Motorola 2N5459 or HEP-802.).
RFC2 — 1-mH choke (Millen J300-1000 or equiv.).

capacitor can be used. A less expensive and more compact tuning capacitor would be the Cardwell HFD-50, or the James Millen Co. 21050RM. The primary requirement, as in any good receiver, is that the shaft of the capacitor turn freely and smoothly, and that the rotor bearings make positive contact with their connecting lugs.

In this model an imported tuning dial provides the vernier action for the tuning capacitor. Though low in cost, the dial mechanism works well. A good substitute dial drive would be one of the precision verniers taken from a war-surplus TU-6B-series tuning unit – available from many surplus houses for a nominal price.

There is ample room under the chassis to install 10 size-C flashlight cells (series-connected) to power the receiver. Alternatively, NiCad batteries can be used, and offer better life span plus the feature of rechargability.

Preliminary Testing

It is always wise to inspect any etched circuit board used in a new project before applying operating voltages. Make certain that there are no cold solder joints. Inspect the board for unwanted solder bridges between the various copper elements. The next check can be made by connecting an ohmmeter between the *circuit* side of CR2 and chassis ground. With a VTVM the dc resistance in this model is 170 ohms. With the test prods reversed a reading of 80 ohms was noted. The ohmmeter tests should be made with one of the converters plugged in, and with all semiconductors in their sockets. Any significant departure from these readings will indicate a bad component or a wiring error.

Connect +12 volts to J4 after inserting jumper plug P1 into J2. Tune in the signal from Q2 on the

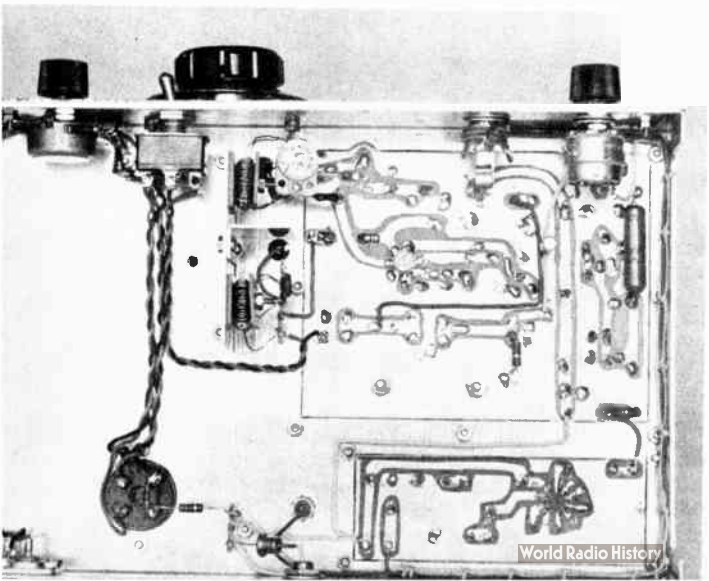

Fig. 8-56 — Looking into the bottom half of the chassis, the integrated circuit, U1, is at the center of the main circuit board. An aluminum bracket and divider holds toroidal coils L2 and L5. The coil leads connect to terminal strips which are mounted in front of the bracket. Twisted-pair hookup wire connects the antenna lug on the converter socket to input link L1. Diode CR2 is mounted on a terminal strip near the 12-volt input jack (J4) near the rear apron of the chassis (center). Diodes CR3 and CR4 should be mounted directly at J1 (not shown here).

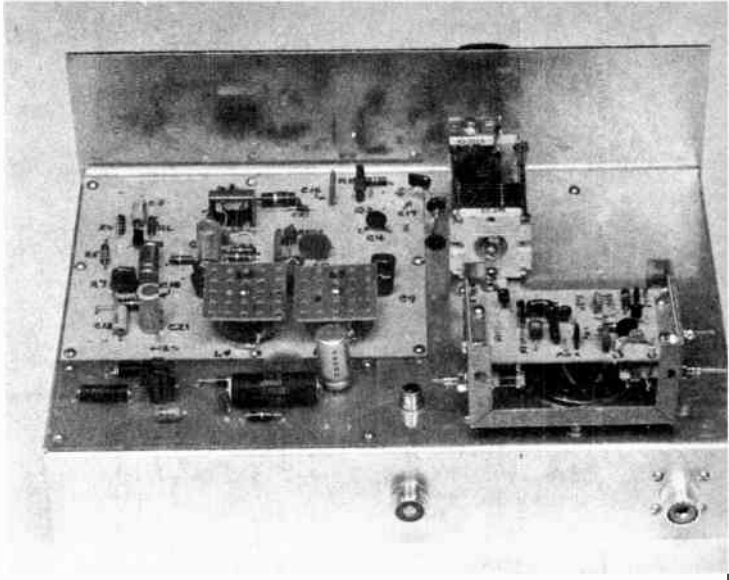

Fig. 8-57 — Top-chassis view of the receiver. U1, the audio amplifier is mounted on the chassis behind the main circuit board (lower left of photo). The speaker jack is just to the left of the plug-in converter. A heat sink (Motorola HEP-502) is used on the IC, U2.

80-meter band of a ham receiver. (It may be necessary to connect a short wire to the antenna post of the monitor receiver, placing its free end near Q2 in order to pick up the signal.) Adjust C19 so that the signal is heard at 3.5 MHz when C3 is fully meshed. With the plates of C3 fully unmeshed the signal from Q2 should be heard at 4 MHz. Actually, there should be some overlap at each end of the band, providing a tuning range of approximately 3495 kHz to 4005 kHz. If Q2 does not oscillate, check to make sure that L5 and L6 are phased correctly as shown by the two black dots in Fig. 8-50. Both windings must be put on the core the same way; that is, both can be wound either clockwise or counter-clockwise, but not in opposite sense to one another.

After aligning the BFO, connect an antenna to J1 and tune in a signal near the center of the 80-meter band. Adjust C1 for peak signal strength. This will permit the detector and BFO tuned circuits to track across the entire tuning range. Since there is no agc circuit in this receiver strong signals will overdrive the audio amplifier, Q1, if the gain control, R1, is set too high. Backing it off slightly will correct the problem, should it occur.

A plug-in converter can now be substituted for P1 at J2. Its oscillator signal can be monitored on a general-coverage receiver during alignment. When this is done L10, Fig. 8-55, is adjusted until the required oscillator frequency is heard (see coil tables). With an antenna connected at J1, tune in a signal near the center of the band covered by the converter. Adjust the slugs in L8 and L9 for maximum signal response. The receiver should now be ready to use.

On 40 meters the band will tune "backwards," i.e., 7000 kHz will tune in at 4 MHz on the main dial, and 7500 kHz will fall at 3.5 MHz. The other bands will tune conventionally, their low ends falling at 3.5 MHz. A calibration chart can be made up to show where the 10-kHz points of each band fall on the tuning dial. A dial chart for the 80-meter band is pasted on the panel of this receiver, and calibration for the other four bands is carried out by means of mental gymnastics. *Note* Other 500-kHz segments of the 10-meter band can be turned by setting L10 for the proper frequency. Use the same 10-meter constants given in the coil table.

Templates and parts-layout sheets are available from ARRL for 50 cents and an s.a.s.e.

A RECEIVING PACKAGE FOR 1.8 TO 144 MHZ

This solid-state equipment will enable the operator to receive the amateur bands from 1.8 to 144 MHz, and has provisions for connecting outboard converters to accommodate the bands above 2 meters. The main portion of the receiver consists of a single-conversion lineup which tunes from 28 to 30 MHz. This frequency spread is divided into four 500-kHz segments by means of a band-switching arrangement. Converters for 6- and 2-meter reception are built into the main chassis of the equipment. A selector switch enables the operator to receive 10, 6, or 2 meters without the necessity of external equipment. For reception of the bands from 160 through 15 meters (plus WWV), an outboard "up-converter" works into tunable range No. 1 of the main receiver – 28 to 28.5 MHz.

This is an advanced project, and inexperienced builders are not encouraged to attempt duplication of the circuits given here. Circuit board patterns are not available. The constructor may choose to use point-to-point wiring rather than employ circuit boards. Or, a different packaging scheme may be desired by those who wish to miniaturize the equipment. If a smaller dial mechanism is used the dimensions of the chassis and panel can be

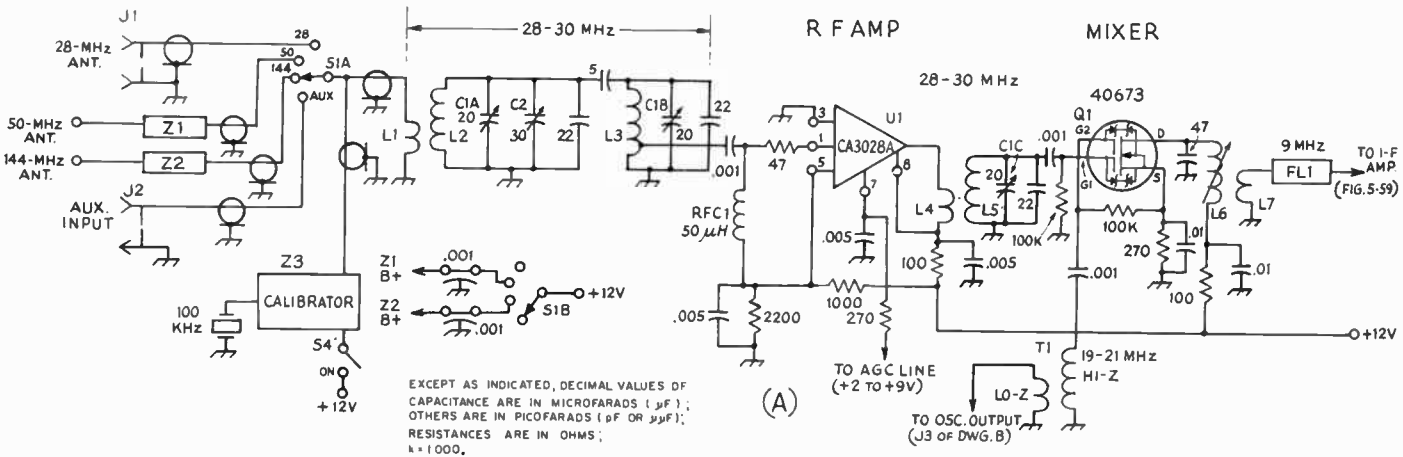

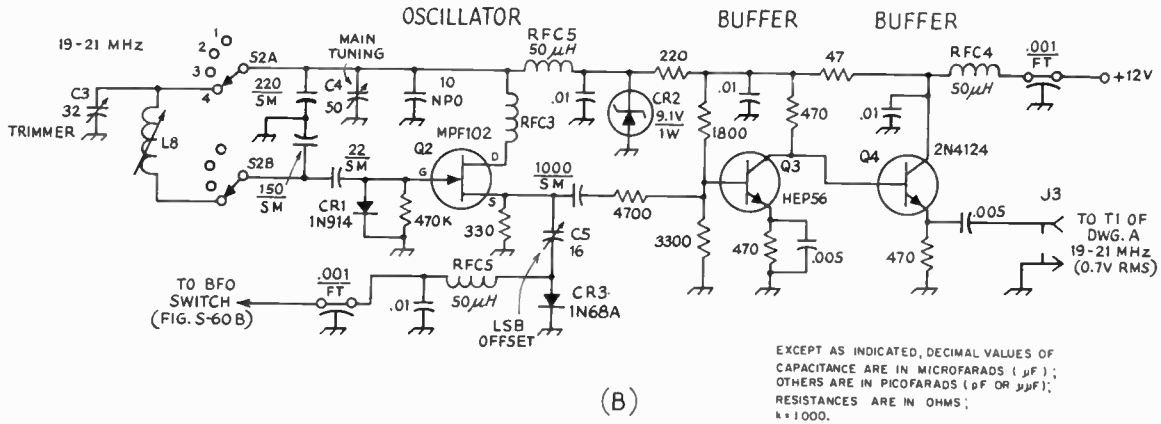

Fig. 8-59 — Circuit diagram of the front end and VFO sections of the receiver. Numbered components not in parts list are for text reference. Resistors are 1/2-watt composition. Fixed-value capacitors are disk ceramic unless otherwise stated.

C1 — Three-section miniature variable (J. W. Miller 1460), 20 pF per section.
C2 — 3-30-pF ceramic or compression trimmer.
C3 — Miniature 32-pF air trimmer (4 required). (E. F. Johnson Co. 160-30 or Cardwell MAC-30 will be suitable.)
C4 — Double-bearing 50-pF variable (James Millen 28050 MKBB used here).
C5 — Miniature pc-mount 16-pF variable (Johnson 189-506-5), mounted on VFO board near Q2.
CR1 — High-speed silicon switching diode. 1N914 or equiv.
CR2 — 9.1-volt, 1-watt Zener diode.
FL1 — 9-MHz, 2.4-kHz — bandwidth ssb lattice filter, KVG XF-9B. (Spectrum International, Box 87, Topsfield, MA 01983).
J1 — SO-239 type coax chassis fitting.
J2, J3 — Phono jack.
L1 — 3 turns No. 30 enam. over L2.
L2, L3, L5 — 13 turns No. 26 enam. on Amidon T-37-10 core. Tap L3 at 6 turns. (Amidon Assoc., 12033 Otsego St., North Hollywood, CA 91607).
L4 — 8 turns No. 26 enam. over L5.
L6 — 5.5 to 8.6-μH inductor (Miller 4505). J. W. Miller Co., 19070 Reyes Ave., Compton, CA 90221.
L7 — 6 turns No. 30 enam. over B+ end of L6.
L8 — 7 turns No. 18 enam. close-wound on Miller 4400-2 ceramic slug-tuned form (0.4 to 0.62 μH). Four required. Cement turns with Q dope.
RFC1, RFC4, RFC5 — Miniature 50-μH choke (Millen Co. J-300-50).
RFC2 — 1-mH rf choke (Millen Co. J300-1000).
RFC3 — Three Amidon ferrite beads at drain terminal of Q2. Install on 1/2" length of No. 24 bus wire.
S1 — Single-section, 2-pole, 4-position phenolic wafer switch.
S2 — Two-pole, 4-position, single-section, ceramic rotary switch.
S4 — Spst wafer switch.
T1 — Broadband toroidal step-up transformer. Secondary —(30 μH) 75 turns No. 30 enam. on Amidon T-50-2 core. Primary — 20 turns No. 30 enam. over sec. winding.
Z1, Z2 — 6- and 2-meter converters described in VHF receiving chapter of this book.
Z3 — 100-kHz crystal standard (Radio Shop Frequency Marker kit used here. Outputs on 5, 10, 25, 50, and 100 kHz. Radio Shop Lab 1, 48 Elm Street, New Canaan, CT 06840).

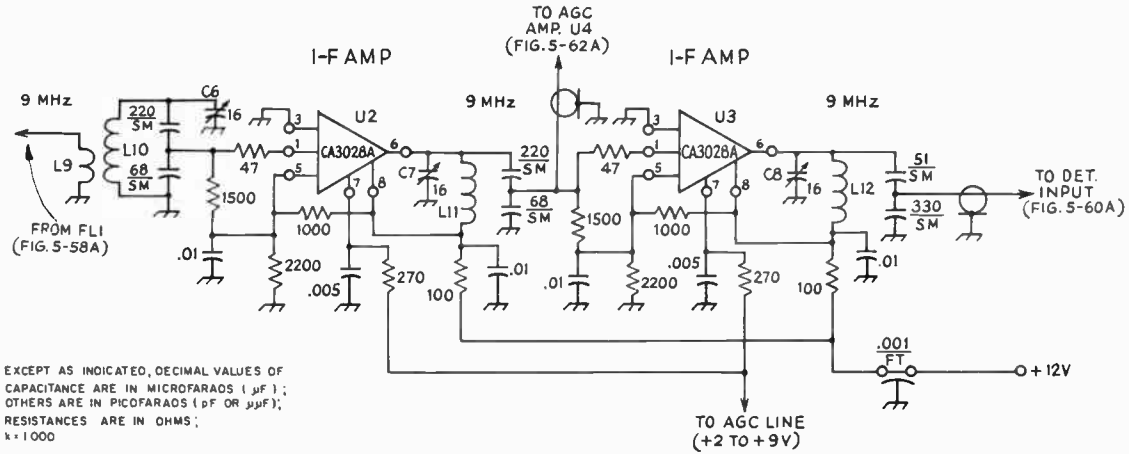

Fig. 8-60 — Schematic diagram of the i-f amplifiers. Resistors are 1/2-watt composition. Fixed-value capacitors are disk ceramic unless noted differently.
C6-C8, incl. — Miniature pc-mount air variable, 16 pF. (Johnson 189-506-5.)
L9 — 20 turns No. 24 enam. over L10 winding.
L10-L12, incl. — 30 turns No. 24 enam. on Amidon T-50-2 toroid core.
U2, U3 — RCA integrated circuit.

Fig. 8-58 – The up-converter is shown to the left of the main receiver, and is housed in a homemade aluminum box whose perforated cover is removed. To the right, is the 10/6/2-meter receiver. The Eddystone dial can be calibrated to suit the operator's needs, or a frequency chart can be plotted for comparison with the two logging scales. The empty panel hole at the upper left can be used for mounting a VFO-calibrate control. The control to the right of the phone jack is a spare, and in this model has no function. The panel is painted gray, and black Kurz-Kasch knobs, Series 700, are used to achieve contrast with the panel.

greatly reduced. Similarly, the circuit boards can be located closer together than was done in this version, thus reducing the mass of the composite unit. (An earlier treatment of the circuits contained in the main portion of the receiver was given in January 1971 *QST*.) The 6- and 2-meter converters used in the front end of this equipment are described in Chapter 9 of this book. (Also, see *QST* for October of 1969.)

The Front End

Circuit for the rf and mixer stages of the tunable portion of the receiver is shown in Fig. 8-59A. Z1 and Z2, the vhf converters, can be switched into the receiver input by means of S1. The "up-converter" of Fig. 8-65 connects to the auxiliary input jack, J2. For straight 10-meter reception S1 routes the 28-MHz antenna to L1. Calibrator Z3 connects to L1 to provide strong markers.

Rf amplifier U1 operates in a differential configuration to provide good stability and gain. Its input circuit consists of a double-tuned toroidal tank, L2, L3, and C1, and provides excellent selectivity. Agc is applied to bias terminal 7 of U1 simultaneously with the bias terminals of i-f amplifiers U2 and U3. The agc circuit offers in excess of 80-dB control of the dynamic range of the three ICs.

Mixer stage Q1 employs a dual-gate MOSFET with built-in transient suppressors. This device assures good conversion gain and low cross-modulation effects. Its input tuned circuit is ganged to that of U1 so that all three tuned circuits can be peaked in one operation by means of C1, a three-section variable. Oscillator injection (19 to 21 MHz) is supplied to Gate 2 of Q1 through a toroidal broadband step-up transformer, T1. Output from the mixer is routed to FL1, a KVG 2.4-kHz lattice filter whose center frequency is 9 MHz. Those desiring a-m bandwidth, or 500-Hz cw bandwidth, can select the appropriate KVG filter for the job, or can work out a suitable switching arrangement to incorporate all three filters in the i-f strip.[1] If this is done, a third BFO crystal – for cw reception – will have to be added to the circuit of Fig. 8-61B.

Local Oscillator

An MPF102 JFET, Q2, is used as the VFO (Fig. 8-59B). Only one coil and trimmer capacitor, L8 and C3, are shown in the diagram. Actually, there are four slug-tuned inductors and four identical trimmers. Switch S2 selects any one of four tuned circuits to provide the four 500-kHz tuning ranges. Diode CR1 helps to stabilize the gate voltage of Q2, and limits the transconductance on positive peaks to greatly reduce harmonic output from the VFO. Zener diode CR2 holds the drain supply at 9.1 volts to further aid stability. Direct-coupled buffer stages Q3 and Q4 isolate the VFO from the mixer. No "pulling" can be detected when tuning the preselector or varying the rf/i-f gain control.

Diode CR3 operates as a switch to add C5 to the circuit when switching from one sideband to the other. This action provides a frequency offset to assure that the BFO remains at zero beat with the incoming signal when changing sidebands. RFC3 is a ferrite-bead vhf parasitic choke.

I-F Circuit

Fig. 8-60 shows the circuit of the i-f amplifier. Two more differential amplifiers are used here, U2 and U3. All three i-f tuned circuits are toroidal-wound to lessen the chance of interstage coupling and attendant instability. Capacitive dividers are used across the inductors to provide an impedance match at the input and output of the IC amplifiers. Agc is applied to pin 7 of each IC, and varies from +2 volts at minimum gain to +10 volts during periods of maximum gain. The i-f signal is sampled at pin 1 of U3 and routed to agc amplifier U4 of Fig. 8-63A. The power gain of this i-f strip is approximately 65 dB. Those wishing additional gain in this part of the receiver can add a third CA3028A, using circuit constants similar to those shown here.

Detector Section

A standard two-diode product detector is shown in Fig. 8-61A. It is changed to an a-m detector by switching CR5 out of the circuit. Since there is no conversion gain realized during a-m reception, audio output from the receiver is rather low when using the imported audio amplifier board employed in this model. If considerable a-m operation is planned, an additional stage of audio amplification can be added between the detector and the main audio amplifier, Z4. Or, an audio channel with more gain can be used at Z4.

[1] The KVG a-m filter number is XF-9C for 3.75-kHz bandwidth, and XF-9D for 5-kHz bandwidth. The 500-Hz cw filter is numbered XF-9M. Data sheet available from Spectrum International, P.O. Box 81, Topsfield, MA 01983.

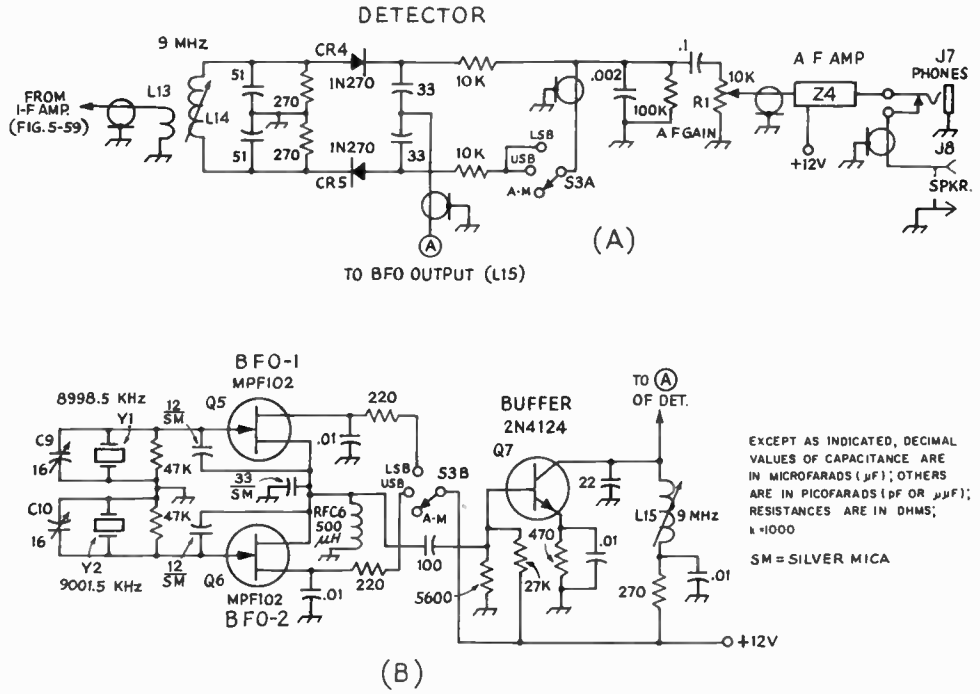

Fig. 8-61 — Diagram of the detector and BFO sections of the receiver. Fixed-value resistors are 1/2-watt carbon. Fixed-value capacitors are disk ceramic unless otherwise indicated.

C9, C10 — Miniature pc-mount air variable (Johnson 189-506-5).
J7 — Closed-circuit phone jack.
J8 — RCA phono jack.
L13 — 10 turns No. 30 enam. over center of L14 winding.
L14 — 15 µH nominal (Miller Co. 4506 slug-tuned inductor).
L15 — Same type as L14.
Q5-Q7, incl. — Motorola semiconductor.
RFC6 — 500-µH rf choke (Millen Co. J300-500).
R1 — 10,000-ohm audio-taper carbon control.
S3 — 2-pole, 3-position, single-section phenolic wafer switch.
Y1, Y2 — KVG matching crystals for FL1.
Z4 — Audio amplifier, 300-mW output or greater. (Radio Shack 277-1557 used here.)

The BFO

Separate BFO stages are used to provide upper- and lower-sideband reception (Fig. 8-61B). This system permits dc switching, which is preferable to crystal switching. A common buffer amplifier, Q7, isolates the oscillators from the load while building the BFO levels up to approximately 10 volts rms. Trimmer capacitors C9 and C10 are adjusted to place the BFO signal in the proper part of the i-f passband.

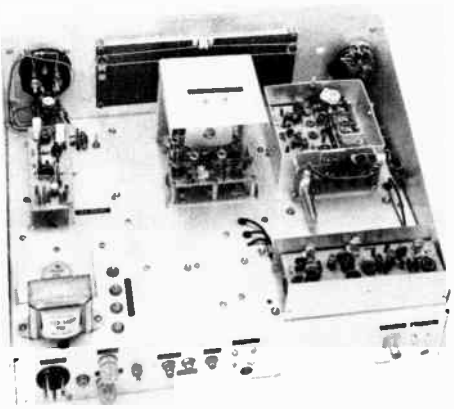

Fig. 8-62 — Looking at the top of the receiver chassis the front-end circuit board is at the upper right. The calibrator is attached to the back wall of the front-end assembly. The 9-MHz i-f strip at the top-center of the chassis is the VFO with its cover removed. The power supply is at the lower left, and the agc board is at the upper left. Shield covers are removed from the front end and i-f compartments in this view.

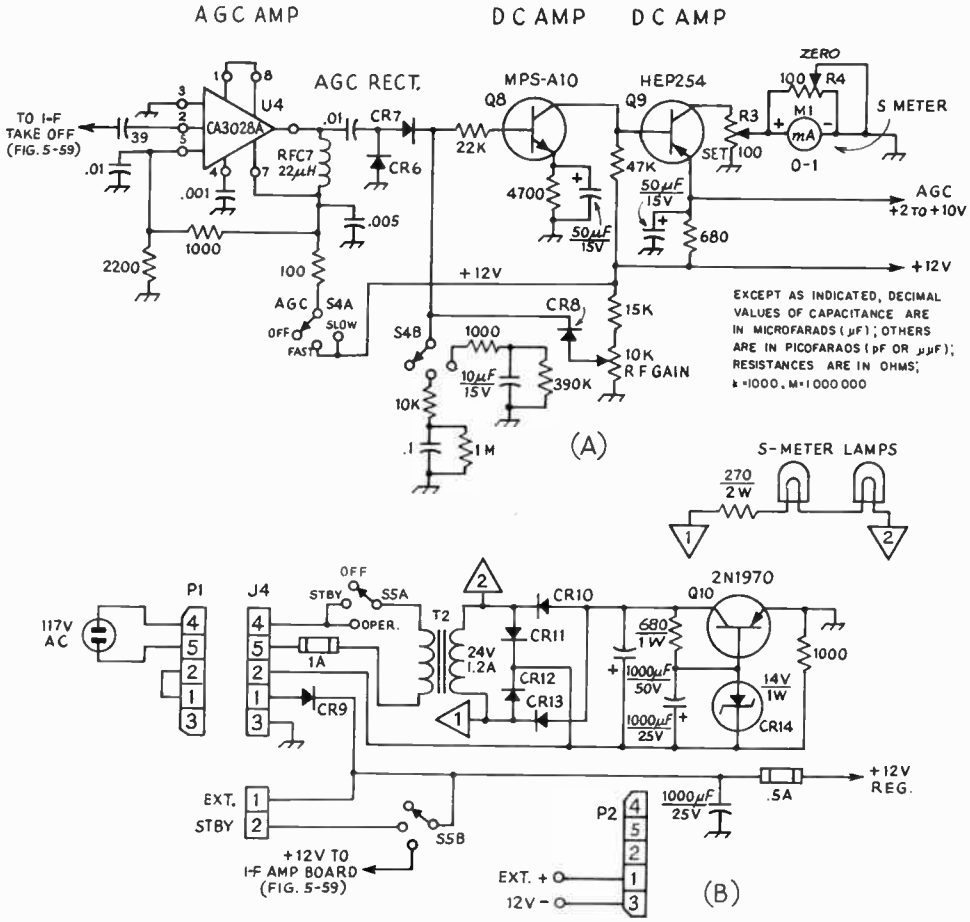

Fig. 8-63 — At A, the circuit for the agc system. The diagram at B shows the power supply section. Fixed-value resistors are 1/2-watt carbon. Capacitors are disk ceramic. Those with polarity marking are electrolytic.

CR6, CR7 — 1N914 silicon switching diode.

CR8-CR13, incl. — 50-PRV, 1-ampere silicon diode.

CR14 — 14-volt, 1-watt Zener diode (see text).

J4 — 5-pin male plug (chassis mount).

M1 — 0 to 1 mA S meter (Lafayette Radio 99E-255140 with built-in lamps).

P1, P2 — 5-pin female cable-end plug.

Q8, Q9, Q10 — Motorola semiconductor.

RFC7 — 22-μH rf choke (Millen J300-22).

R2 — 10,000-ohm, linear-taper 2-watt carbon control (Allen Bradley).

R3, R4 — PC-mount, 100-ohm linear-taper carbon control.

S4, S5 — 2-pole, 3-position, single-section phenolic wafer switch.

T2 — 24-volt, 1.2-ampere transformer.

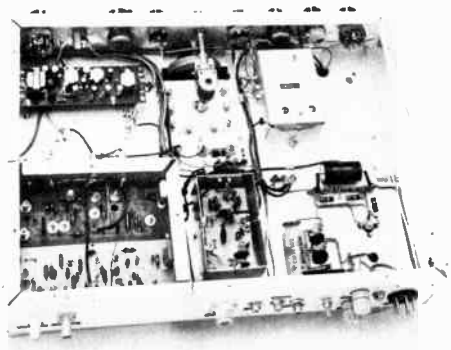

Fig. 8-64 — Bottom view of the receiver. The imported audio-amplifier module is visible at the upper left. Directly below it are the 6- and 2-meter converters in their shield compartment. To the right of the converters is the detector board in its shield box. The BFO box is at the upper right of the photo. A right-angle drive (top center) gangs the VFO band switch to the front-panel knob. The VFO coils and trimmers protrude through the chassis around the right-angle drive. The power supply is at the lower right.

AGC and S Meter

Fig. 8-63A shows the agc circuit. Agc amplifier U4 operates in cascode to provide up to 40-dB gain. The 9-MHz i-f energy is amplified, then rectified by doubler circuit CR6-CR7. The rectified agc signal is then amplified by cascaded dc amplifiers Q8 and Q9. Npn transistor Q8 is forward biased by the agc voltage to provide a voltage drop across its collector load resistor (47,000 ohms). This voltage drop (as the incoming signal increases) biases pnp transistor Q9 more heavily in the forward direction to cause a large voltage drop across its 680-ohm emitter resistor. This change in output voltage – +10 to +2 volts – ramps up and down in accordance with the strength of the incoming signal and changes the bias on U1, U2 and U3. The S meter is connected across a 100-ohm collector load at Q9 and measures changes in the voltage in that part of the circuit. Control R3 sets the full-scale meter reading. Trimmer R4 estabilishes the zero-signal meter reading.

Rf gain control R2 changes the forward bias on Q8 to vary the output of the two-stage dc amplifier. Minimum gain occurs when the arm of R2 is at its highest point above ground. Diode CR8 acts as a gate to prevent the rectified agc signal from being lost to ground through the rf-gain control.

Switch S4 selects the agc characteristic desired – NO AGC, FAST AGC, or SLOW AGC. The time constants shown in Fig. 8-63A can be altered to suit the operator, but those given are suitable for a-m, ssb, and cw. Both the attack and decay times can be changed by using different values of resistance. In the AGC-OFF position of S4 the operating voltage is removed from U4, but dc amplifiers Q8 and Q9 can still be controlled by R2.

Power Supply and Audio Amplifier

The simple power supply of Fig. 8-63B delivers 12 volts (regulated) at up to 500 mA. Ripple is so low that it could not be measured with a scope. With the Zener reference shown the output voltage is actually 13.5 volts. A 12-volt Zener diode will provide approximately 11.5 volts output, but the 13.5-volt figure more closely approximates that of a standard automotive system, so the receiver was designed for that potential.

Operation from an external 12 to 13.5-volt supply is a simple matter by merely disconnecting P1 from J4, then connecting the external battery to J4 by means of P2.

The audio board used in this receiver delivers up to 500 mW output with negligible distortion. It is an imported assembly that was designed for 9-volt operation.[2] However, by changing the two output transistors to 2N599s it was learned that the module would perform safely at up to 13.5 volts. This amplifier is designed for use with a positive ground, therefore, it must be isolated from the main chassis of the receiver. Also, the input and output transformers each have one lead connected to the ground foil of the board. The ground foil should be cut away with a knife blade so that the 8-ohm windings are floating with respect to the remainder of the board. This will permit normal connections to be made to the rest of the receiver while using shielded audio cable. The audio channel shown for the beginner's receiver (earlier in this chapter) could be substituted for the imported board shown here. The former uses a transformerless Motorola 1-watt IC, and a preamplifier. Almost any pair of 1-watt pnp transistors can be used in place of the substituted 2N599s. They should have medium beta and a V_{ceo} of at least 40.

The "Up-Converter"

The circuit for this outboard accessory is given in Fig. 8-65. It uses a crystal-controlled local oscillator. Since the crystal frequencies fall *above* that of the tunable 28-MHz i-f, there are no birdies to contend with – the main reason for adopting this technique. The circuit is quite standard, so an in-depth explanation will not be offered.

The converter power supply is a duplication of that shown in Fig. 8-63B. It was made husky so that it could be used to power other receivers that might be built as companion units to the converter.

Those not interested in the 6- and 2-meter feature of this receiver may choose to eliminate Z1 and Z2. If this is done, the up-converter can be built on the main receiver chassis, and its power can be taken from the main receiver supply. Alternatively, the power supply in the up-converter can be omitted, and the converter's power taken from the main receiver supply.

Construction

The primary thought connected with the assembly of this equipment is that the signal modules are isolated from one another by means of shield compartments, feedthrough capacitors, and interconnecting leads of small-diameter coax. This technique greatly reduces the possibility of spurious responses and unwanted signal pickup. The placement of the various modules is not critical when this method is used; hence, the builder can plan his own layout if he wishes. The audio amplifier, however, should be located as far away from the power supply as possible if hum is to be reduced to a minimum. An iron shield compartment, made from galvanized furnace ducting or a tin can, could be used to enclose the audio system. This would greatly reduce the possibility of hum pick up. Alternatively, the power supply can be enclosed in an iron box.

The receiver shown in the photos is assembled on a 12 × 17 × 3-inch aluminum chassis. A 10-1/2-inch aluminum rack panel contains the Eddystone dial and panel controls. One inch of stock was removed from each end of the panel.

The local oscillator is controlled by the Eddystone dial, and gives linear readout across most of the tuning range. The 0-to-500 logging

[2] Radio Shack Corp., 730 Commonwealth Ave., Boston, MA, or 2725 W. 7th St., Fort Worth, TX.

Coil Table

Freq. (MHz)	L16	L17	L18	L19	C12	Y3
1.8-2.0	6T No. 30 Enam.	18.8–41 µH (42A335CBI)	18.8–41 µH (42A335CBI)	.4–.6 µH 8T No. 26 Enam.	43 pF	30.3 MHz
3.5–4.0	5T No. 30 Enam.	6.05–12.5 µH (42A105CBI)	6.05–12.5 µH (42A105CBI)	.3–.5 µH 7T No. 26 Enam.	51 pF	32 MHz
7–7.5	4T No. 30 Enam.	3.6–8.5 µH (42A686CBI)	3.6–8.5 µH (42A686CBI)	.4–.6 µH 8T No. 26 Enam.	33 pF	35.5 MHz
14–14.5	3T No. 30 Enam.	1–1.87 µH (42A156CBI)	1–1.87 µH (42A156CBI)	.2–.4 µH 5T No. 26 Enam.	51 pF	42.5 MHz
21–21.5	2T No. 30 Enam.	.4–1 µH (42A106CBI) (Remove 2T)	.4–1 µH (42A106CBI) (Remove 2T)	.2–.4 µH 5T No. 26 Enam.	27 pF	49.5 MHz
WWV (15 MHz)	2T No. 30 Enam.	1–1.87 µH (42A156CBI)	1–1.87 µH (42A156CBI)	.2–.4 µH 5T No. 26	51 pF	43.3 MHz

Coil, capacitor, and crystal data for the up-converter. Coil L16 is wound over the ground end of L17. Y3 is the 3rd overtone variety. All coils for L19 are close-wound on J. W. Miller 4500-4 iron-slug forms. C12 is silver mica. All coils are available from J. W. Miller Co., 19070 Reyes Ave., Compton, CA 90221.

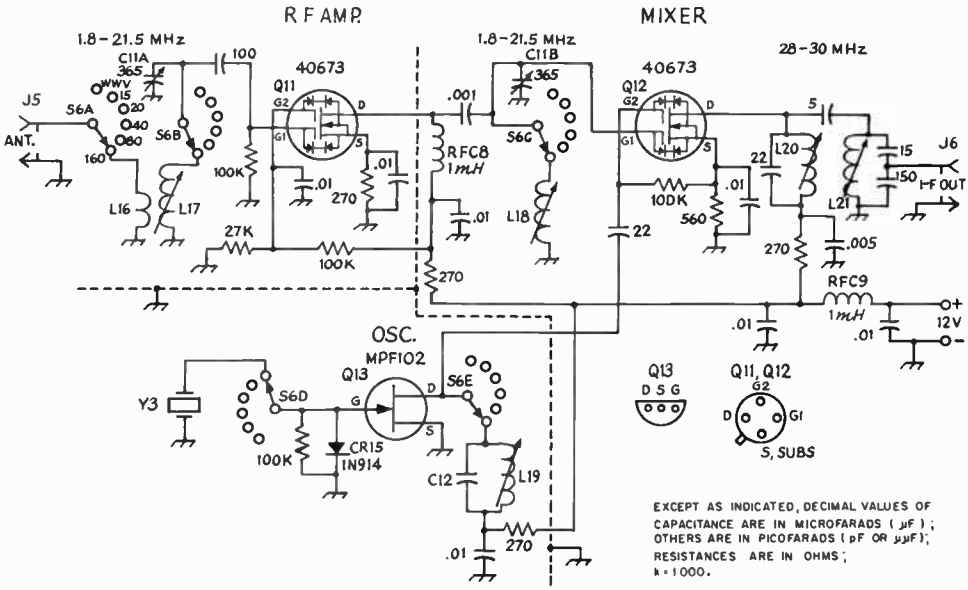

Fig. 8-65 — Circuit diagram for the 1.8 to 21 MHz up-converter. Resistors are 1/2 watt composition. Fixed-value capacitors are disk ceramic except for C12 which is silver mica.

C11 — Two-section broadcast variable, 365-pF per section. (J. W. Miller 2112.)
C12 — See coil table.
J5, J6 — Phono jack.
L16-L19, incl. — See coil table.
L20 — .99-1.5 µH slug-tuned inductor (Miller 4403).
L21 — 1.6-3.1 µH slug-tuned inductor (Miller 4404).
Q11, Q12 — RCA dual-gate MOSFET.
Q13 — Motorola JFET.
RFC8, RFC9 — 1-mH rf choke (Millen J300-1000).
S6 — 5-pole, 6-position, 5 wafer, ceramic rotary switch, nonshorting. (Centralab P-272 index and 5 type XD wafer sections).
Y1 — Third-overtone crystal (see coil table). International Crystal Mfg. Co., type EX.

scale is used to read the 500-kHz band segments. However, this range reads backwards when using the up-converter, so one must interpolate. Of course, the dial face can be calibrated to provide whatever readout is desired.

One significant handicap resulting from the use of this dial mechanism is that its control shaft is situated rather high above the chassis when mounted as shown. This feature made it necessary to house the VFO in a much higher box than was wanted. Despite the use of heavy gauge aluminum stock for the VFO box, some mechanical instability results when the receiver is bumped. If this mounting and construction technique is used, the VFO should be secured to the panel as well as to the chassis, and the chassis should have a thick aluminum plate mounted under the VFO box. The plate should extend as far beyond the box as practical. A different dial mechanism could solve this problem . . . or a different layout with the present dial assembly may be possible. The panel is finished in gray, and press-on decals identify the controls.

Operation

The builder's ability to tune and adjust this receiver should be commensurate with his technical aptitude, and since this is not a beginner's project little difficulty should be encountered during final checkout and testing.

Perhaps the best point at which to start is to test and align the VFO. Its output signal can be monitored on a general-coverage receiver, and preferably with the aid of 100-kHz standard. Band position 1 should give VFO coverage from 19 to 19.5 MHz; band 2 from 19.5 to 20 MHz, and so on. The desired range can be obtained by tuning C4 from one end of its rotation to the other, and alternately adjusting C3 and L8 (for each band position) until exactly 500 kHz are covered by C4 in each position of S2.

Next, feed a 28-MHz signal into J1 and tune C1 for a peak response. This should occur with the plates of C1 at approximately 1/3 mesh. Adjust the two built-in trimmers of C1 for a peak in signal. Then peak with outboard trimmer C2. Continuing with a 28-MHz input signal, peak the i-f trimmers, the detector input coil, and the BFO output coil, L15.

The BFO crystal trimmers can be set by ear, so to speak. Tune through a sideband signal and adjust the trimmers (C9 and C10) so that the sideband opposite the desired one shows no response, or minimal response, depending on how much suppression of the unwanted sideband the monitored signal has. Final touchup of the trimmers can be effected to obtain the most natural voice quality. After this is done, switch from upper to lower sideband (after tuning a cw signal to zero beat) and adjust offset trimmer C5 so that the signal remains at zero beat regardless of which sideband is selected.

The agc system should be operating properly at this point, so switch to FAST-AGC and turn the rf/i-f gain control to the minimum-gain setting (counter clockwise). Set S-meter control R3 for a full-scale reading of M1. Turn the rf/i-f control to clockwise, disconnect the antenna from J1, then adjust R4 for zero reading of the S meter.

Tune-up of the up-converter is simply a matter of peaking its front-end trimmers for maximum signal with the preselector tuning capacitor set near midrange. It may be that the output from the up-converter is sufficiently high in level to cause overloading of the main receiver. If this happens, a resistive pad can be inserted between the converter and the main receiver. Or, as a poor option, merely detune the front end of the converter to reduce the gain. However, rf amplifier Q11 of Fig. 8-65 is purposely biased for low gain in an effort to minimize the problem. Ideally, the up-converter should provide unity gain for best receiver performance.

Chapter 9

VHF and UHF Receiving Techniques

Adequate receiving capability is essential in vhf and uhf communication, whether the station is a transceiver or a combination of separate transmitting and receiving units, and regardless of the modulation system used. Transceivers and fm receivers are treated separately in this *Handbook*, but their performance involves basic principles that apply to all receivers for frequencies above 30 MHz. Important attributes are good signal-to-noise ratio (low noise figure), adequate gain, stability, and freedom from overloading and other spurious responses.

Except where a transceiver is used, the vhf station often has a communications receiver for lower bands, with a crystal-controlled converter for the vhf band in question ahead of it. The receiver serves as a tunable i-f system, complete with detector, noise limiter, BFO and audio amplifier. Unless one enjoys work with communications receivers, there may be little point in building this part of the station. Thus our concern here will be mainly with converter design and construction.

Choice of a suitable communications receiver for use with converters should not be made lightly, however. Several degrees of selectivity are desirable: 500 Hz or less for cw, 2 to 3 kHz for ssb, and 4 to 8 kHz for a-m phone are useful. The special requirements of fm phone are discussed in Chapter 14. Good mechanical design and frequency stability are important. Image rejection should be high in the range tuned for the converter output. This may rule out 28 MHz with receivers of the single-conversion type, having 455-kHz i-f systems.

Broad-band receiving gear of the war-surplus variety is a poor investment at any price, unless one is interested only in local work. The superregenerative receiver, though simple to build and economical to use, is inherently lacking in selectivity.

With this general information in mind, we will consider vhf and uhf receiver "front ends" stage by stage.

RF AMPLIFIERS

Signal-to-Noise Ratio: Noise of one kind or another limits the ability of any receiving system to provide readable signals, in the absence of other kinds of interference. The noise problem varies greatly with frequency of reception. In the hf range man-made, galactic and atmospheric noise picked up by the antenna and amplified by all stages of the receiver exceeds noise generated in the receiver itself. Thus the noise figure of the receiver is not of major importance in weak-signal reception, up to at least 30 MHz.

At 50 MHz, external noise still overrides receiver noise in any well-designed system, even in a supposedly "quiet" location. The ratio of external to internal noise then drops rapidly with increasing signal frequency. Above 100 MHz or so external noise other than man-made is seldom a problem in weak-signal reception. Noise characteristics of transistors and tubes thus become very important in receivers for 144 MHz and higher bands, and circuit design and adjustment are more critical than on lower frequencies.

The noise figure of receivers using rf amplifiers is determined mainly by the first stage, so solving the internal-noise problem is fairly simple. Subsequent stages can be designed for selectivity, freedom from overloading, and rejection of spurious signals, when a good rf amplifier is used.

Gain: It might seem that the more gain an rf amplifier has, the better the reception, but this is not necessarily true. The primary function of an rf amplifier in a vhf receiver is to establish the noise figure of the system; that is, to override noise generated in later stages. One good rf stage is usually enough, and two is the usual maximum requirement.

Once the system noise figure is established, any further gain required may be more readily obtained in the intermediate frequency stages, or even in the audio amplifier. Using the minimum rf gain needed to set the overall noise figure of the receiver is helpful in avoiding overloading and spurious responses in later circuits. For more on rf gain requirements, see the following section on mixers.

Stability: Neutralization or unilaterialization (see chapter on semiconductors) may be required in rf amplifiers, except where the grounded-grid circuit or its transistor equivalent is used. Amplifier neutralization is accomplished by the feeding energy from the output circuit back into the input, in such amount and phase as to cancel out the effects of device capacitance and other unwanted input-output coupling that might cause oscillation or other regenerative effects. Inductive neutralization is shown in Fig. 9-1B and C. Capacitive arrangements are also usable. Examples of both will be seen later in this chapter.

An rf amplifier may not actually oscillate if operated without neutralization, but noise figure and bandwidth of the amplifier may be better with

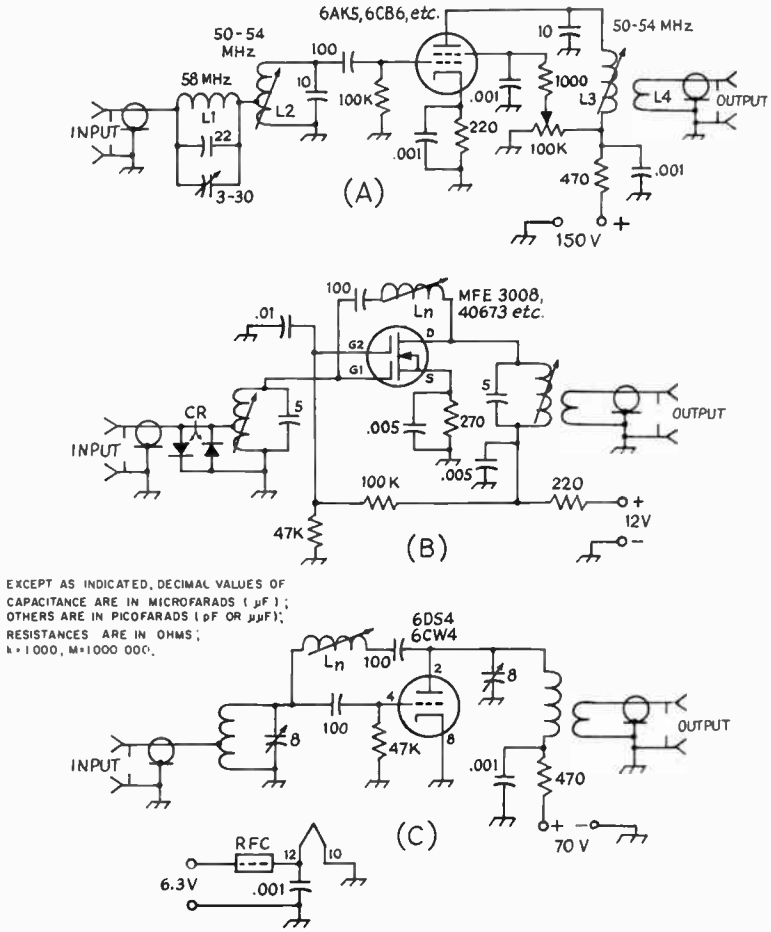

Fig. 9-1 — Typical grounded-cathode rf amplifiers and a transistor equivalent. The pentode, A, is useful mainly below 100 MHz. The insulated-gate FET, B, and neutralized triode, C, work well on all vhf bands. Protective diodes shown in B can be used with any rf amplifier. An interfering-signal trap is shown in the input circuit of A. Except where given, component values depend on frequency.

it. Any neutralization adjustment reacts on the tuned circuits of the stage, so the process is a repetitive cut-and-try one. The objective should be greatest margin of signal over noise, rather than maximum gain without oscillation. A noise generator is a great aid in neutralization, but a weak signal can be used if the job is done with care.

Overloading and Spurious Signals: Except when some bipolar transistors are used, the rf amplifier is not normally a major contributor to overloading problems in vhf receivers, though excessive rf gain can cause the mixer to overload more readily. Overloading is usually a matter of mixer design, with either transistors or tubes. Images and other spurious responses to out-of-band signals can be kept down by the use of double-tuned circuits between the rf and mixer stages, and in the rf amplifier input circuit. In extreme cases, such as operation near to fm or TV stations, coaxial or other high-Q input circuits are helpful in rejecting unwanted frequencies.

Using RF Preamplifiers

It is important to design the front-end stages of a vhf receiver for optimum performance, but we often want to improve reception with equipment already built. Thousands of fm receivers formerly in commercial service, now revamped for amateur work in the 50-, 144- and 420-MHz bands, were built before modern low-noise tubes and transistors were available. Though otherwise useful, these receivers have excessively-high noise figure. Many other commercial and home-built vhf converters and receivers are also not as sensitive as they might be.

Though it would be better to replace the rf stages of such equipment with more modern devices, the simpler approach is usually to add an outboard rf amplifier using a low-noise tube or transistor. In the fm example, the quieting level of some receivers can be improved by as much as 10 dB by addition of a simple transistor amplifier. Similar improvement in noise figure of some receivers for other modes is also possible;

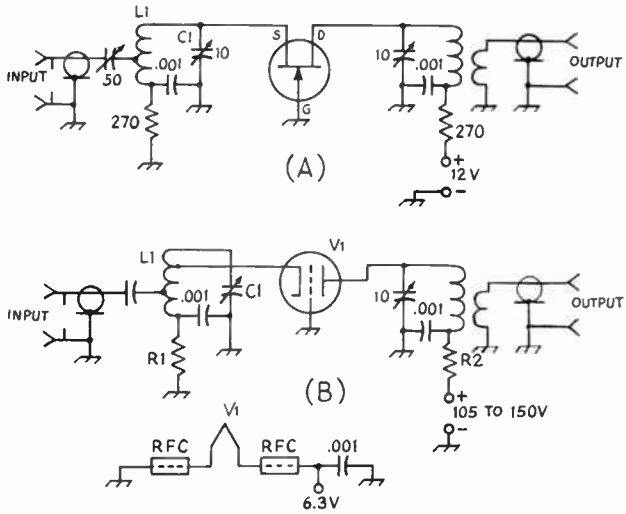

Fig. 9-2 – Grounded-gate FET preamplifier and its grounded-grid triode equivalent tend to have lower gain and broader frequency response than other amplifiers described. Use of ferrite-bead rf chokes in the heater circuit is shown in B. Select values of R1 and R2 to suit tube type. The tuned input circuit, L1C1, can be eliminated and the antenna coupled directly to the input element, for extreme simplicity as in remote amplifiers.

particularly band-switching communications receivers that have vhf coverage.

Common circuits for rf preamplifier service are shown in Figs. 9-1, 2 and 3. Examples of amplifier construction are given later in this chapter. Circuits shown in the vhf converters described can also be adapted to preamplifier service.

Amplifier Circuitry

Circuit discussion is cumbersome if we use strictly-correct terms for all tube and transistor amplifiers, so tube terminology will be used here for simplification. The reader is asked to remember that "grid" may also imply "base" for bipolar transistors, or "gate" for field-effect transistors. "Cathode" should be read "emitter" for the bipolar, and as "source" for the FET.

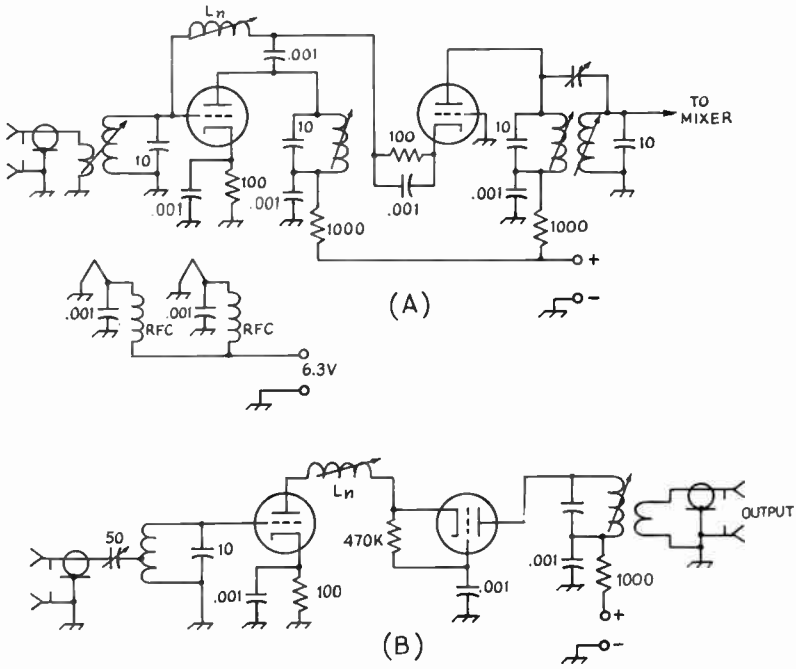

Fig. 9-3 – Cascode amplifier circuit combines grounded-cathode and grounded-grid stages, for high gain and low noise figure. Though tubes are shown, the cascode principle is usable with transistors as well. Examples are given in later constructional information. Rf chokes must be able to carry the tube heater current.

Amplifiers may be the grounded-cathode type, Fig. 9-1; grounded-grid, 9-2; or a combination of both, 9-3. The pentode circuit, 9-1A, works well at 50 MHz, but is little used for higher bands. Its gain and noise figure are adequate at 50 MHz, and it is simple and readily adapted to automatic gain control.

Triode tubes and transistors usually require neutralization for optimum noise figure with the grounded-cathode circuit. Inductive neutralization is shown in Fig. 9-1B and C and in 9-3, but capacitive methods work equally well. Examples will be seen later in this chapter. The 58-MHz trap circuit in Fig. 9-1A is discussed in the following section on mixers.

An alternative to neutralization lies in use of the grounded-grid circuit, Fig. 9-2. Its stage gain is lower and its bandwidth generally greater than with the grounded-cathode circuit. The input impedance is low, and the input circuit is not critical. A broad-band amplifier may be made with a low-impedance line connected directly to the input element, if selectivity is not required at this point for other reasons. Tubes designed for grounded-grid service include the 417A/5842, 416B, 7768 and the various "lighthouse" types, though almost any triode or triode-connected tetrode can be used. Most high-beta vhf transistors work well in grounded-base (gate) circuits. In the grounded-grid amplifier the tube heater becomes effectively a part of the tuned circuit, so some form of high-current rf choke is required. Ferrite-bead chokes are well adapted to this use. See Fig. 9-2B.

The cascode circuit, Fig. 9-3, combines grounded-cathode and grounded-grid stages, securing some of the advantages of both. The series cascode, B, is often used with dual triodes. Both versions are readily adapted for transistors. Because the second stage loads the first heavily, the cascode may operate stably without neutralization. Lower noise figure is possible with it, however. Adjustment of neutralization, and the tuning of and coupling into the input circuit, should be made for lowest noise figure.

Front-End Protection

The first amplifier of a receiver is susceptible to damage or complete burnout through application of excessive voltage to its input element by way of the antenna. This can be the result of lightning discharges (not necessarily in the immediate vicinity), rf leakage from the station transmitter through a faulty send-receive relay or switch, or rf power from a nearby transmitter and antenna system. Bipolar transistors often used in low-noise uhf amplifiers are particularly sensitive to this trouble. The degradation may be gradual, going unnoticed until the receiving sensitivity has become very poor.

No equipment is likely to survive a direct hit from lightning, but casual damage can be prevented by connecting diodes across the input circuit as shown in Fig. 9-1B. Note that these are in opposite polarity, to protect against damage during either half of the cycle. Either germanium or silicon vhf diodes can be used. Both have thresholds of conduction well above any normal signal level, about 0.2 volt for germanium and 0.6 volt for silicon. A check on weak-signal reception should be made before and after their connection.

MIXERS

Conversion of the received energy to a lower frequency, so that it can be amplified more efficiently than at the signal frequency, is a basic principle of the superheterodyne receiver. The stage in which this is done may be called a "converter," or "frequency converter," but we will use the more common term, *mixer*, to avoid confusion with *converter*, as applied to a complete vhf receiving accessory. Mixers perform similar functions in both transmitting and receiving circuits, and mixer theory and practice are treated in considerable detail elsewhere in this *Handbook*.

A receiver for 50 MHz or higher usually has at least two such stages; one in the vhf or uhf converter, and usually two or more in the communications receiver that follows it. We are concerned with the first mixer. Whether it works into a communications receiver or the i-f stages of a complete vhf or uhf receiving unit is not important here.

The Diode Mixer: There are many types of mixers, the simplest being merely a diode with the signal and energy on the heterodyning frequency fed into it, somewhat in the manner of the 1296-MHz example, Fig. 9-4A. The mixer output includes both the sum and difference frequencies. Either can be used, but in this application it is the difference, since we are interested in going lower in frequency.

With a good uhf diode in a suitable circuit, a diode mixer can have a fairly low noise figure, and this is almost independent of frequency, well into the microwave region. The effectiveness of most rf amplifiers falls off rapidly above 400 MHz, so the diode mixer is almost standard practice in amateur microwave communication. All diode mixers have some conversion *loss*. This must be added to the noise figure of the i-f amplifier following, to determine the overall system noise figure. Low-noise design in the first i-f stage is thus mandatory, for good weak-signal reception with a diode mixer having no rf amplifier preceding it. Purity of the heterodyning energy and the level of injection to the mixer are other factors in the performance of diode mixers.

Balanced mixers using hot-carrier diodes are capable of noise figures 1 to 2 dB lower than the best point-contact diodes. Hot-carrier diodes are normally quite uniform, so tedious selection of matched pairs (necessary with other types of diodes) is eliminated. They are also rugged, and superior in the matter of overloading.

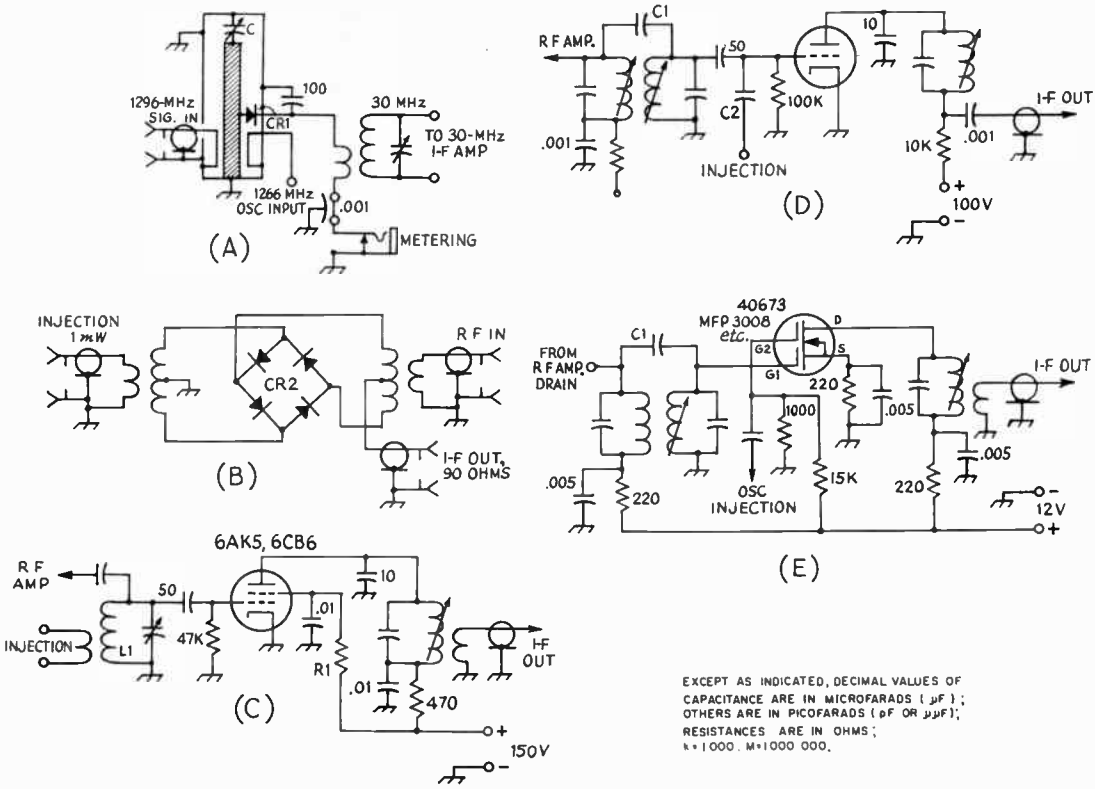

Fig. 9-4 — Vhf and uhf mixer circuits. A diode mixer for 1296 MHz, with a coaxial circuit for the signal frequency, is shown in A. CR1 is a uhf diode, such as the 1N21 series. A balanced mixer, as in B, gives improved rejection of the signal and injection frequencies. If hot-carrier diodes are used for CR2, sorting for matched characteristics is eliminated. The pentode mixer, C, requires low injection and works well below about 200 MHz. The triode mixer, D, has a simplified i-f output circuit, and bandpass coupling to the rf stage. C1 and C2 can be insulated wires twisted together for about 1/2 inch, as needed. Insulated-gate FET mixer, E, is ideal for transistor receivers.

The i-f impedance of a balanced hot-carrier diode mixer (Fig. 9-4B) is on the order of 90 ohms, when the oscillator injection is about one milliwatt. Thus the mixer and a transistorized i-f amplifier can be separated physically, and connected by means of 93-ohm coax, without an output transformer.

Conversion loss, around 7 dB, must be added to the noise figure of the i-f system to determine the overall system noise figure. Unless a low-noise preamplifier is used ahead of it, a communications receiver may have a noise figure of about 10 dB, resulting in an overall noise figure of 17 dB or worse for a vhf system with any diode mixer. A good i-f preamplifier could bring the receiver noise figure down to 2 dB or even less, but the system noise figure would still be about 9 dB; too high for good reception.

An amplifier at the signal frequency is thus seen to be required, regardless of mixer design, for optimum reception above 50 MHz. The rf gain, to override noise in the rest of the receiver, should be greater than the sum of noise figures of the mixer and the i-f system. Since the noise figure of the better rf amplifiers will be around 3 dB, the gain should be at least 20 dB for the first example in the previous paragraph, and 12 dB for the second.

Tube and Transistor Mixers: Any mixer is prone to overloading and spurious responses, so a prime design objective should be to minimize these problems. The pentode mixer, Fig. 9-4C, can be set up for low noise figure or good freedom from overloading, but not both. A low-noise mixer is needed if no rf amplifier is used. The screen voltage would then be lowered by means of R1 until the tube just barely draws plate current, the condition for lowest noise. With a good rf stage, the mixer screen voltage is set for reasonable plate-current flow, which gives the better freedom from overloading. Bias and supply voltage have similar effects on triode and transistor mixers.

Pentode or tetrode tubes make simple and effective mixers, up to 150 MHz or so. Triodes work well at any frequency, and are preferred in the high vhf range. Diode mixers are common in the 420-MHz band and higher.

The injection level from the oscillator affects mixer performance, though it is not critical when a

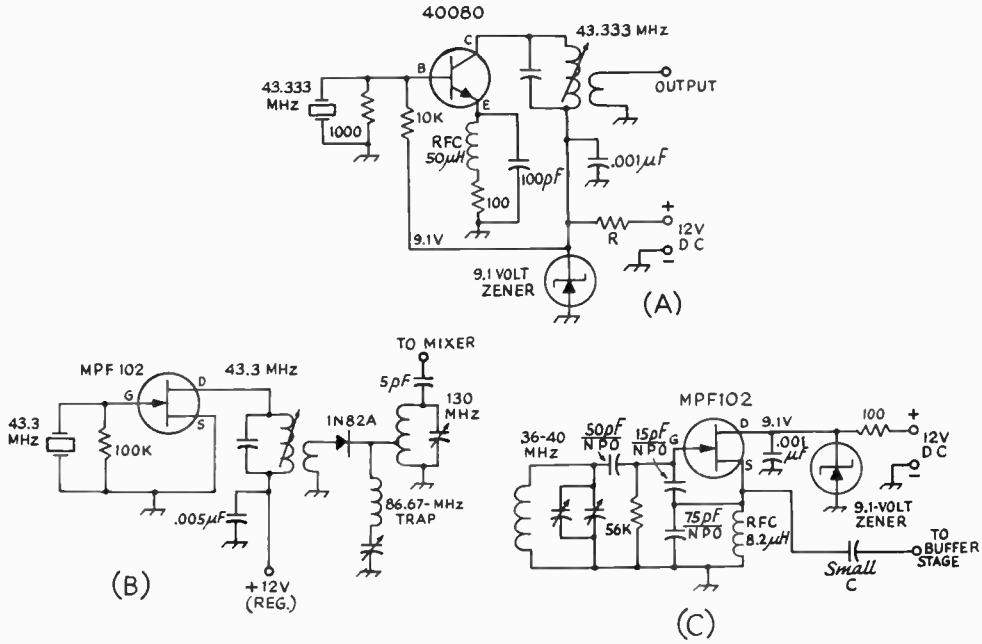

Fig. 9-5 — A simple overtone crystal oscillator for vhf converters, A, has Zener voltage regulation. An FET overtone oscillator and diode multiplier, B, supply injection for a 144-MHz converter with a 14-MHz i-f. Series trap absorbs unwanted second harmonic at 86 MHz. A triode oscillator would use essentially the same circuit. A tunable oscillator, as shown at C, would be suitable for a simple 50-MHz receiver with a broad i-f system.

good rf amplifier precedes the mixer. Until it affects the mixer adversely in other ways, raising the injection level raises the mixer conversion gain. A simple check is made by observing the effect on signal-to-noise ratio as the injection is varied. At preferred injection levels, the gain will vary but the signal-to-noise ratio will not change. The injection should then be set for conversion gain a few decibels above that at which lower injection causes a drop in signal-to-noise ratio.

A popular triode mixer using the 6CW4 or 6DS4 is shown in Fig. 9-4D. Cathode bias and plate voltage should be adjusted for appreciable current flow, for best conversion gain and freedom from overloading. Oscillation may occur in some mixers as the result of inadvertent resonance in the output circuit near the signal frequency. A small capacitance from plate, collector or drain to ground, with the shortest possible leads, is a simple cure or preventive measure.

Double-tuned circuits in the mixer and the rf amplifier, as shown in several of our schematic diagrams, help to keep down mixer response to signals outside the intended tuning range. Various ways of coupling injection are also shown in Fig. 9-4.

The insulated-gate FET is superior to other transistors for mixer service, in the matter of overloading. An example quite similar to the tube mixer is given in Fig. 9-4E. The junction FET is also widely used. An objection to the IGFET, the ease with which it can be damaged in handling, has been taken care of by building-in protective diodes. Units so designed require no special care in handling, and they work as well as their more fragile predecessors. Insulated-gate MOSFETs have resistance to overloading comparable with the better vacuum-tube mixers.

INJECTION STAGES

Oscillator and multiplier stages that supply heterodyning energy to the mixer should be as stable and free of unwanted frequencies as possible. Stability is no great problem in crystal-controlled converters, if the oscillator is run at low input and its supply voltage is regulated. Simple Zener regulation, as in Fig. 9-5A, is adequate for a transistorized overtone oscillator. A higher order of regulation is needed for tunable oscillators. See Chapter 5 for suitable regulated power supplies.

Unwanted frequencies generated in the injection stages can beat with signals that are outside the intended tuning range. In a typical example, Fig. 9-5B, an FET overtone oscillator on 43.333 MHz feeds a diode tripler to 130 MHz. This frequency beats with signals between 144 and 148 MHz, to give desired responses at 14 to 18 MHz. The multiplier stage also has some output at twice the crystal frequency, 86.666 MHz. If allowed to reach the mixer, this can beat with fm broadcast signals in the 100-MHz region that leak through the rf circuits of the converter. There are many such

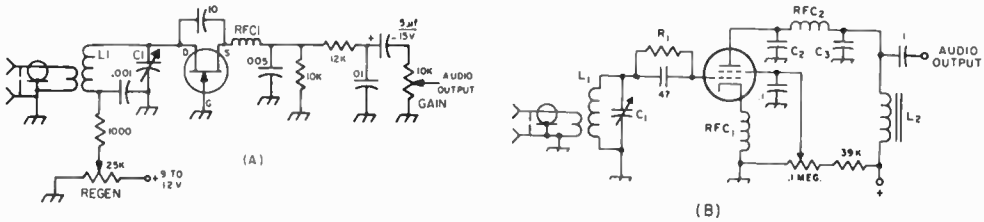

Fig. 9-6 — Circuits of typical superregenerative detectors using a field-effect transistor, A, and a tetrode tube, B. Regeneration is controlled by varying the drain voltage on the detector in the transistor circuit, and the screen voltage in the tetrode or pentode. Values of L1 and C1 should be adjusted for the frequency involved, as should the size of the rf choke, RFC1.

C2, C3 — .001-µF disk ceramic. Try different values up to .005 for desired audio quality.
R1 — 2 to 10 megohms.
L2 — Small audio or filter choke; not critical.
RFC1 — Single-layer rf choke, to suit frequency.
RFC2 — 85-mH rf choke.

annoying possibilities, as any vhf enthusiast living near high-powered fm and TV stations will know.

Spurious frequencies can be kept down by using the highest practical oscillator frequency, no multiplier in a 50-MHz converter, and as few as possible for higher bands. Some unwanted harmonics are unavoidable, so circuit precautions are often needed to prevent both these harmonics and the unwanted signals from reaching the mixer. Selective coaxial or trough-line circuits are practical aids in uhf receivers. Trap circuits of various kinds may be needed to "suck out" energy on troublesome frequencies.

The series trap in Fig. 9-5B reduces the level of the 86-MHz second harmonic of the crystal frequency. A 58-MHz parallel-tuned trap, Fig. 9-1A, absorbs Channel 2 TV signals that could otherwise beat with the second harmonic of a 36-MHz oscillator in a 50-MHz converter that works into a 14-MHz i-f (36 X 2 – 14 = 58).

Unwanted frequencies also increase the noise output of the mixer. This degrades performance in a receiver having no rf amplifier, and makes the job of an amplifier, if used, more difficult.

Frequency multipliers in vhf receivers generally follow transmitting practice, except for their low power level. The simple diode multiplier of Fig. 9-5B will often suffice. Its parallel-tuned 130-MHz circuit emphasizes the desired third harmonic, while the series circuit suppresses the unwanted second harmonic. The trap is tuned by listening to a spurious fm broadcast signal and tuning the series capacitor for minimum interference. The tripler circuit should be peaked for maximum response to a 2-meter signal. Do not detune this circuit to lower injection level. This should be controlled by the voltage on the oscillator, the coupling between the oscillator and multiplier, or by the coupling to the mixer from the 130-MHz circuit.

Tunable Oscillators: Any tunable vhf receiver must have a variable oscillator somewhere along the line. At this point the intermediate frequency is fixed, and the oscillator tunes a range higher or lower than the signal frequency by the amount of the i-f. In the interest of stability, it is usually lower. In Fig. 9-5C a simple JFET oscillator tunes 36 to 40 MHz, for reception of the 50-MHz band with a fixed 14-MHz i-f. Its stability should be adequate for a-m reception with a relatively broad i-f, but it is unlikely to meet the requirements for ssb or cw reception, even for 50 MHz, and certainly not for higher bands.

Practically all vhf reception with high selectivity is with double-conversion setups, with the tunable oscillator serving the second conversion. Such hf oscillators are treated elsewhere in this *Handbook*. They should run at the lowest practical input level, to minimize drift due to heating. The supply should be well-regulated pure dc. Mechanically-rugged components and construction are mandatory. The circuits should be shielded from the rest of the receiver, and coupling to the mixer should be as light as practical. Drift cycling due to heating can be minimized if the oscillator is kept running during transmitting periods.

THE SUPERREGENERATIVE RECEIVER

Though the newcomer may not be too familiar with the superregenerative detector, the simple "rushbox" was widely used in early vhf work. Nothing of comparable simplicity has been found to equal its weak-signal reception, inherent noise-limiting and agc action, and freedom from overloading and spurious responses. But like all simple devices the superregenerator has limitations. It has little selectivity. It makes a high and unpleasant hissing noise, and it radiates a broad interfering signal around its receiving frequency.

Adding an rf amplifier will improve selectivity and reduce detector radiation. High-*Q* tuned circuits aid selectivity and improve stability. Use of superregeneration at 14 to 18, 26 to 30 MHz, or some similar hf range, in the tunable element of a simple superheterodyne receiver, works fairly well as a tuner for vhf converters. None of these steps corrects the basic weaknesses entirely, so the superregenerator is used today mainly where simplicity, low cost and battery economy are major considerations.

Typical superregenerative detector circuits are shown in Fig. 9-6. High-transconductance tubes and high-beta vhf transistors are favored. The power source should be well-filtered and of low impedance. Fresh or well-charged batteries are ideal. Regeneration is controlled by varying the screen voltage in a pentode, the plate voltage in a

triode, or the collector or drain voltage in a transistor. Getting the best out of a superregenerative detector is a cut-and-try process, in which the value of the tube grid-leak resistance, the transistor bias, the coupling to the previous stage or the antenna, and the constants of the output circuit may be subject to change. Output circuit filtering, to keep the quenching frequency (just above the audio range) out of the audio amplifier is important. Just *operating* the detector calls for both patience and practice.

LOW-NOISE CONVERTERS FOR 50 AND 144 MHz

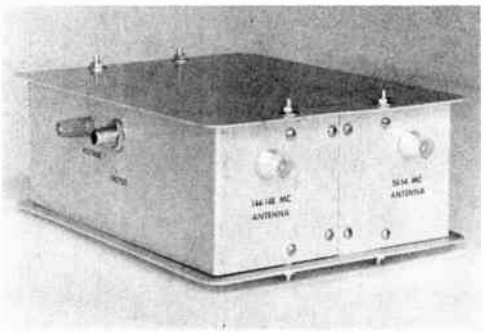

Fig. 9-7 — The twin vhf converters are housed in a homemade aluminum box which has removable top and bottom covers for easy access to the circuit boards. Each converter has its own input and output jacks so that simultaneous operation is possible.

These converters use identical circuit boards, and are easy to assemble from the template and parts layout sheet.[1] Overall gain with these converters is approximately 30 dB when they are properly adjusted. Noise figure is in the vicinity of 2.5 dB. They are designed for an i-f of 28 to 30 MHz, and require 12 volts at 40 mA to operate them. The use of dual-gate MOSFETs in the mixer circuits assures good conversion gain, and provides excellent immunity to cross-modulation.[2] If new components are used, the 2-meter converter can be built for less than $30. The 6-meter version will cost slightly less because it has fewer parts. (From *QST*, October 1969.)

The 2-Meter-Converter

Because the converters were designed as part of another project, the component numbering in Figs. 9-9 and 9-10 does not start in the low numbers. Each part is numbered (though not all are called out in the parts lists) for the purpose of identification on the circuit-board templates.

Referring to Fig. 9-10, diodes CR6 and CR7 are bridged across the antenna input at J4 to provide burnout protection for Q7, the rf amplifier. They will not conduct until the incoming signal level reaches approximately 0.7 volts. They can be eliminated from the circuit if the converter is well isolated from the transmitter by means of a high-quality, shorting-type coaxial relay. *Make sure that the coax relay switches* BEFORE *the transmitter activates!*

The antenna lead is tapped down on L14, one turn from the ground end. The exact positioning of the tap can be varied for the best noise figure, though the position given here should be satisfactory. Neutralization of the rf stage is effected by the series coil, L22, which should be adjusted for the lowest noise figure consistent with good stability. Source bias is used at Q7 to prevent stage overloading in the presence of strong signals.

Bandpass coupling is used between Q7 and Q8, the mixer, to keep out-of-band signals from reaching the mixer. The bandpass coils, L15 and L16, should be stagger-tuned to give a reasonably flat response from 144 to 146 MHz. The rf signal is

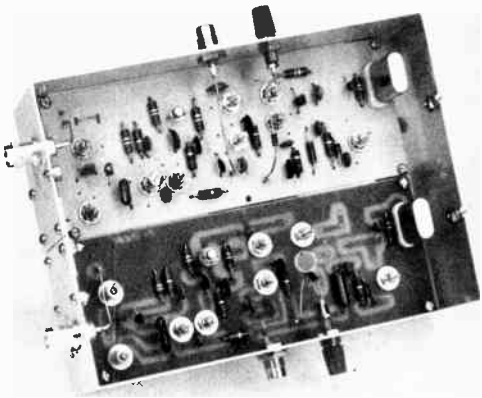

Fig. 9-8 — The darker of the two circuit boards contains the 6-meter converter. It is shown at the bottom of the photo in this inside view. Since both circuit boards are identical in pattern, some of the holes are left blank on the 6-meter model, as there is one less stage in its oscillator section. The lighter-colored circuit board (upper) is the 2-meter unit. Both boards are glass epoxy. The protective diodes at the antenna jacks were not installed when these photos were taken.

[1] Ready-made circuit boards may be available for this project. Check advertisements in *QST*.

[2] Both the MFE3008 and 3N141 MOSFETs should be handled with care to prevent damage from static charges. They should be installed in the circuit board as the last step prior to testing. Sockets are recommended, and the four transistor leads should be kept shorted together until they are installed. If the MOSFET is to be soldered into the circuit board, rather than being plugged into a socket, the tip of the soldering iron should be connected to an earth ground while soldering. Several MOSFETs are now available with built-in protective diodes that make these precautions unnecessary. The 40673 and others work as well as their more fragile predecessors.

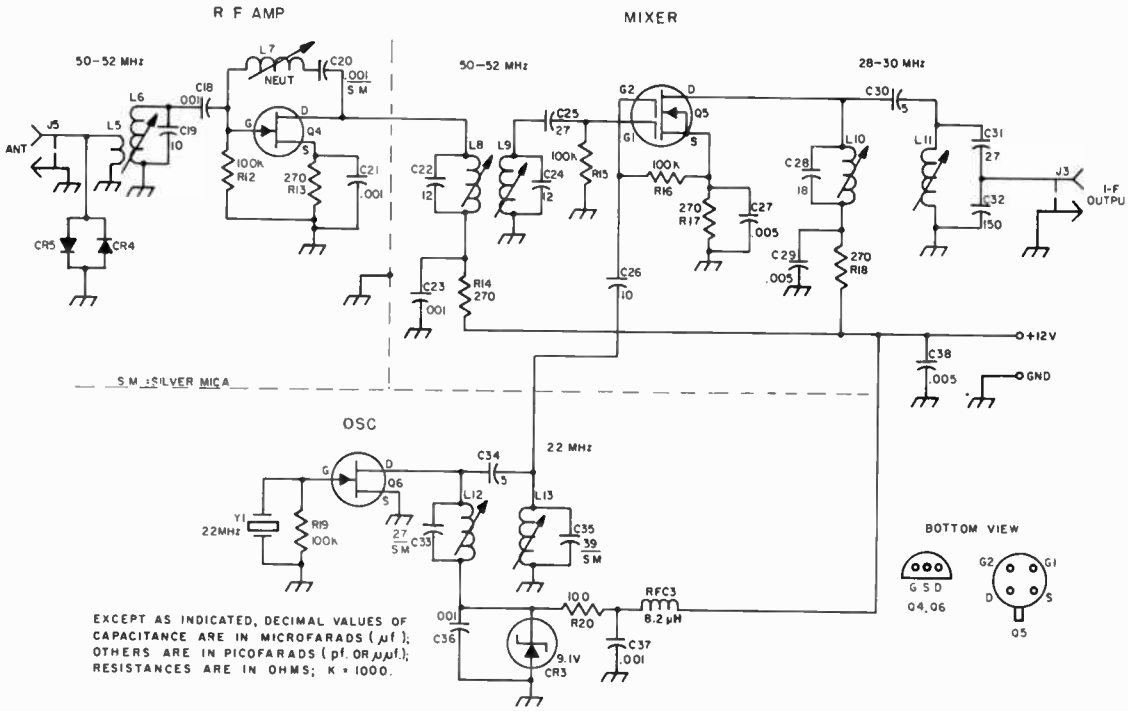

Fig. 9-9 — Circuit diagram of the 6-meter converter. Resistors are 1/2-watt composition. Capacitors are disk ceramic unless specified differently. Numbered components not appearing in the parts list were so identified for circuit-board layout purposes.

CR3 — 9.1-volt, 1-watt Zener diode (Motorola HEP-104 or equiv.).
CR4, CR5 — Small signal silicon switching diodes (1N914).
J2 — BNC or SO-239-type chassis connector.
J3 — Phono connector.
L5 — 3 turns of small insulated wire wound over the ground end of L6.
L6, L8, L9 — 10 turns No. 24 enam. wire, close-wound, on J. W. Miller 4500-4 iron-slug form.
L7 — 25 turns No. 30 enam. on 4500-2 form.
L10-L13, incl. — 12 turns No. 24 enam., close-wound on J. W. Miller 4500-2 iron-slug form.
Q4, Q6 — Junction FET, Motorola MPF102 (HEP-802 or 2N4416 suitable).
Q5 — Dual-gate MOSFET, Motorola MFE3008 (RCA 3N141 also suitable). See note 2.
RFC3 — 8.2-μH miniature rf choke (James Millen 34300-8.2).
Y1 — 3rd-overtone crystal (International Crystal Co. type EX).

coupled to gate 1 of Q8, and the oscillator signal is supplied to control gate 2. *Do not interchange the gates.* Bandpass tuning is used at the output of the mixer to reduce oscillator feedthrough to the i-f receiver, and to provide a broad response from 28 to 30 MHz. Coils L17 and L18 should be stagger-tuned for a broad response over that frequency range. Output to the i-f receiver is taken at 50 ohms from a capacitive divider across L18.

An overtone oscillator is used at Q9 to provide a 58-MHz signal. The oscillator frequency is doubled to 116 MHz by Q10. Another bandpass tuned circuit is made up by L20, L21 and their associated shunt capacitors. Both coils are peaked at 116 MHz to lessen the chance that 58-MHz oscillator energy, and the 174-MHz oscillator harmonic, will reach the mixer. Tuned traps for both the unwanted frequencies can be added to the injection line of gate 2 by those who desire greater attenuation of those two frequencies. To assure good oscillator starting, L19 should be capable of tuning at least 1 MHz *above* the crystal frequency. When properly adjusted, it will be resonant at approximately 59 MHz. The supply voltage to Q9 is regulated at 9.1 volts by CR8, a 1-watt Zener diode.

The 6-Meter Converter

Fig. 9-9 shows the circuit of the 6-meter unit. For all practical purposes it is a carbon copy of the 2-meter converter, but without the doubler stage in the oscillator channel. The same circuit-board pattern is used for both pieces of equipment, resulting in a few unused holes in the 50-MHz model.

There is no need to tap the antenna down on the input coil, L6, since noise figure is not a prime consideration in this instance. A 3-turn link is wound over the ground end of L6, and is used instead of the tap. Neutralizing inductor L7 is adjusted for stable operation of Q4, and should be set while the antenna is connected to J2. The rf

and mixer bandpass circuits should be stagger-tuned in the same manner as was done in the 2-meter model. Coils L12 and L13 are peaked at 22 MHz. For better purity of the oscillator output signal, if desired, tuned traps for 44 and 66 MHz can be placed in the injection line to gate 2 of Q5. Normally, this should not be necessary.

Construction

Scale templates for the etched-circuit board are available from ARRL for 25 cents and a s.a.s.e. The semiconductors are available from most of the larger mail-order houses, or from any Motorola distributor. The slug-tuned coil forms are made by J. W. Miller and should be only those numbers specified. It will be noted that some coil-form numbers have a numeral 2 at the end (4500-2) while others have a 4 at the end of the number (4500-4). These numbers relate to the core material used, which is designed for a particular frequency of operation. The core material has a significant effect on the tuning range of the inductors, and can seriously affect the coil *Q* if of the wrong type. If substitute coil forms are used, be sure that they're designed for the frequency range over which they will be used.

These converters can be packaged in any style of box the builder prefers. In this instance, both units are housed in a single homemade enclosure which measures 6 3/4 X 5 X 2 1/2 inches. The top and bottom covers are held in place by means of No. 6 spade bolts which are attached to the side walls of the box. This style of construction can be handled with ordinary hand tools, and only four 90-degree bends are required. This box was made from a large aluminum cookie sheet purchased at a hardware store. The dull finish results from a lye-bath treatment given the aluminum after it was formed.

The converters are mounted on the bottom plate of the box by means of 1-inch metal standoff posts. Self-adhesive rubber feet are attached to the

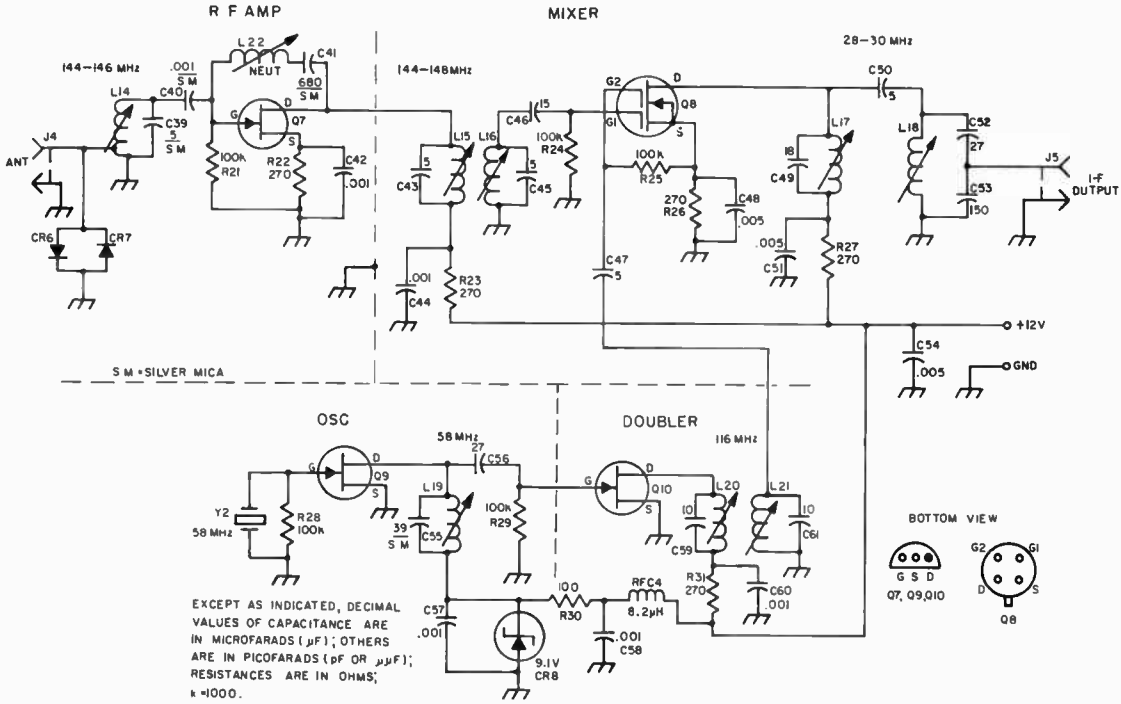

Fig. 9-10 — Circuit of the 2-meter converter. Resistors are 1/2-watt composition. Capacitors, unless otherwise noted, are disk ceramic. See Fig. 9-9 for explanation of component numbering.

CR6, CR7 — 1N914 or equiv.
CR8 — 9.1-volt, 1-watt Zener diode (Motorola HEP-104 or equiv.).
J4 — BNC or SO-239-type chassis connector.
J5 — Phono connector.
L14 — 4 turns No. 24 enam. to occupy 3/8 inch on J. W. Miller 4500-4 iron-slug form. Tap 1 turn from ground end.
L15, L16, L19 — 5 turns No. 24 enam. to occupy 3/8 inch on same-type Miller form as L14.
L17, L18 — 15 turns No. 24 enam. wire, close-wound, on J. W. Miller 4500-2 iron-slug form.
L20, L21 — Same as L14, but no tap.
L22 — 9 turns No. 30 enam., close-wound, on J. W. Miller 4500-2 iron-slug form (J. W. Miller Co., 19070 Reyes Ave., Compton, CA 90221; write for catalog and prices.).
Q7, Q9, Q10 — Junction FET, Motorola MPF102 (2N4416 suitable).
Q8 — Dual-gate MOSFET, Motorola MFE3008 (RCA 3N141 also suitable). See note 2.
RFC4 — 8.2-μH miniature rf choke (James Millen 34300-8.2).
Y2 — 58-MHz 3rd-overtone crystal (International Crystal Co. type EX).

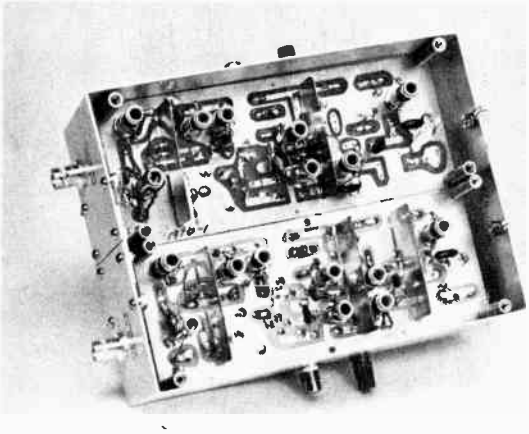

Fig. 9-11 — Looking into the bottom of the converter box, the 6-meter unit is at the top of the photo. Each converter has four 1-inch standoff posts which secure the circuit boards to the bottom plate of the cabinet. Rf shields divide some sections of the converters to prevent unwanted coupling between the tuned circuits. The shields are made from flashing copper and are soldered to the ground foil on the circuit boards. They are notched out wherever they come in close proximity to the non-ground elements of the circuit.

bottom of the box. Black decals are used to identify the terminals on the outside of the box.

A 4-terminal transistor socket is used for the 6-meter mixer MOSFET. At the time the 2-meter converter was built a socket was not on hand, but both converters should use sockets for the MFE3008s to minimize the possibility of transistor damage when soldering. The sockets are Elco 05-3308 and are available from Allied Electronics in Chicago (5 for 94 cents). The binding posts used for connecting the +12 volts to the converters are E. F. Johnson 111-102s.

HEP-56 (Motorola) rectifier diodes are connected from the 12-volt input terminals on the box to the 12-volt terminals on the circuit board, their anodes toward the Johnson binding posts. These diodes prevent damage to the transistors should the operator mistakenly connect the power supply leads for the wrong polarity. Positive voltage will pass through the diodes, but negative voltage will be opposed.

It is strongly recommended that the converters be housed in some type of metal enclosure, as was done here, to prevent oscillator radiation, and to insure against random pickup of interfering commercial signals by the mixer circuit. This precaution is especially important in areas where commercial fm and TV transmitters are nearby.

Adjusting the Converters

After checking for cold-solder connections and unwanted solder bridges across the circuit-board elements, connect the converter being tested to a receiver that can be tuned from 28 to 30 MHz. Using either a signal generator or a weak ham signal, adjust the tuned circuits for peak response. The low end of each vhf band will fall at 28 MHz with the oscillator frequencies given here. (Other segments of either vhf band can be covered by using crystals of the appropriate frequency.) Next, if the rf stage appears to be unstable, as evidenced by popping noises and blank carriers, as the input coil is tuned, adjust the neutralizing coil until the condition ceases. Further adjustment of the neutralizing coil can be carried out in an effort to obtain the best noise figure on 2 meters. After these initial adjustments are completed, the rf and mixer bandpass circuits can be stagger-tuned as outlined earlier. If no signals can be heard, chances are that the oscillator stage is not operating. A wavemeter can be coupled to the drain coil of the crystal oscillator to determine if output exists, then the slug adjusted until an output indication is noted. The 2-meter converter draws approximately 40 mA when operating normally. The 6-meter unit will draw approximately 35 mA.

A 220-MHZ CONVERTER

The superiority of transistors over tubes becomes more marked as the upper frequency limit of the tubes concerned is approached. Thus a well-designed 220-MHz converter using the better transistors may outperform one using anything but the most expensive and hard-to-get vacuum tubes. The 220-MHz converter of Fig. 9-14 is almost a duplicate of the 144-MHz model described in September 1967 *QST*, *The Radio Amateur's VHF Manual*, and the 1969 *Handbook*. Its weak-signal sensitivity should be better than has been possible heretofore at this frequency, for anything of comparable simplicity. It was built by Tom McMullen, W1QVF.

To save space and avoid duplication, only those portions of the converter that are different from the 144-MHz version are discussed here. An identical circuit board is used. The circuit, Fig. 9-14 is similar, but not identical to that of the 144-MHz converter. The same parts designations are used insofar as possible. Self-supporting coils and cylindrical ceramic trimmers are used in the rf circuits. The first rf stage has capacitive neutralization. Injection at 192 MHz (for 28-MHz i-f) is provided by a 48-MHz crystal oscillator and a quadrupler. Oscillator voltage is Zener-diode regulated at 9 volts.

Almost any silicon vhf transistor will work in the oscillator and quadrupler stages. The rf and mixer are FETs. A noise figure of 3 dB or better should be obtainable with several different types, in addition to the Motorola MPF series shown here. The 28-MHz i-f amplifier stage is not shown, as it is identical to that in the 144-MHz converter. It is definitely recommended, not only to assure adequate gain for some of the less-effective

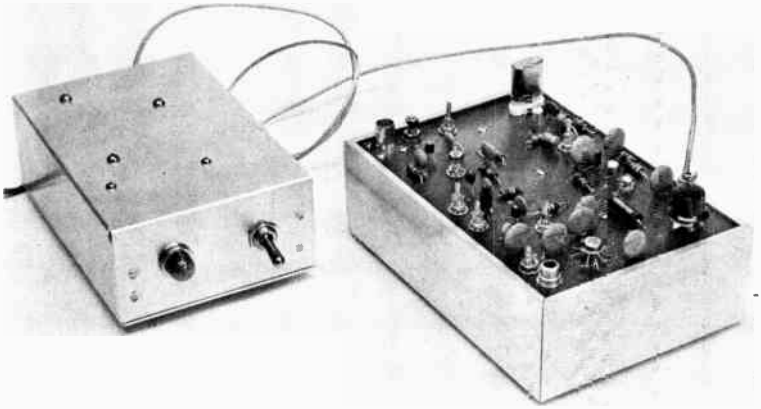

Fig. 9-12 — Outside view of the converter and power supply. This view shows the 2-meter version, which uses the same circuit-board pattern as the 220-MHz model. Slight differences exist and are treated in the text. The 2-meter model is described in September 1967 *QST*.

communications receivers, but also to permit setting the desired converter output level to match the particular receiver in use.

One difference between this converter and the one for 144 MHz might not be readily apparent, but it is important. Note the resistor, R2, in the line to the mixer drain circuit. This is not in the 2-meter version. It was put into the 220-MHz model when a signal-frequency resonance developed in the circuit board, causing an oscillation problem. Looking at the layout drawing of the circuit board pick out the 12-volt bus that runs from near the middle of the board horizontally to the right, before dropping vertically into the lower half. This should be severed below the letter "A" on the sketch. The 100-ohm R2 is bridged across the gap.

Other minor mechanical differences resulting from the slightly-modified circuitry in the rf portion are apparent from the photographs. The neutralizing capacitor, C4, appears about where L14 was. The cylindrical trimmers, C3, C5, C6 and C7, are mounted where the slug coils are seen in the 144-MHz model. Note the mounting positions of the rf coils. L1, L3 and L4 are similar, i.e., their axes parallel to the chassis. L2 is perpendicular to it.

Adjustment

The first step should be to get the oscillator and multiplier running. It may be advisable to keep voltage off the stages other than the ones being checked, at this point. Make sure that the oscillator is on 48 MHz, and no other frequency. (In this type of circuit it is possible to get oscillation on the crystal fundamental, in this case 16 MHz, if the collector circuit does not resonate at 48 MHz.) Now fire up the quadrupler and peak C2 for maximum energy at 192 MHz.

With the converter connected to the receiver, there should be a marked increase in noise when voltage is applied to the rf, mixer and i-f amplifier stages. The i-f can be peaked for maximum noise at 28 MHz. It is helpful at this point to have a signal

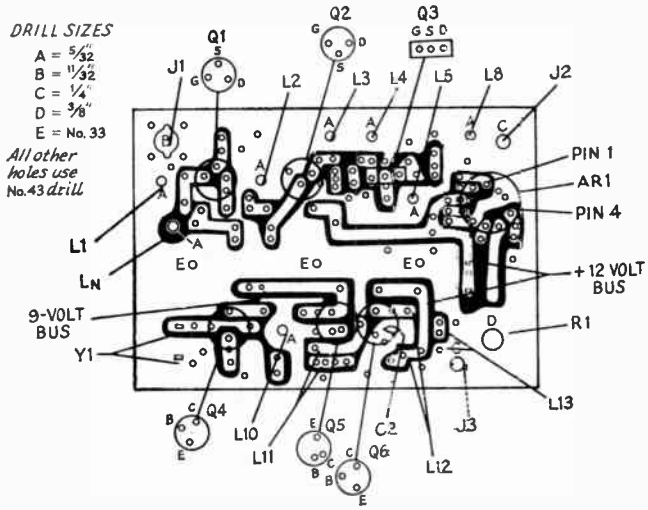

Fig. 9-13 — Layout of the etched-circuit board. The lines show where key components are mounted and indicate the way the semiconductor leads are indexed. This is a bottom view of the circuit board (copper side). A scale template of this board is available from ARRL for 25 cents and a s.a.s.e.

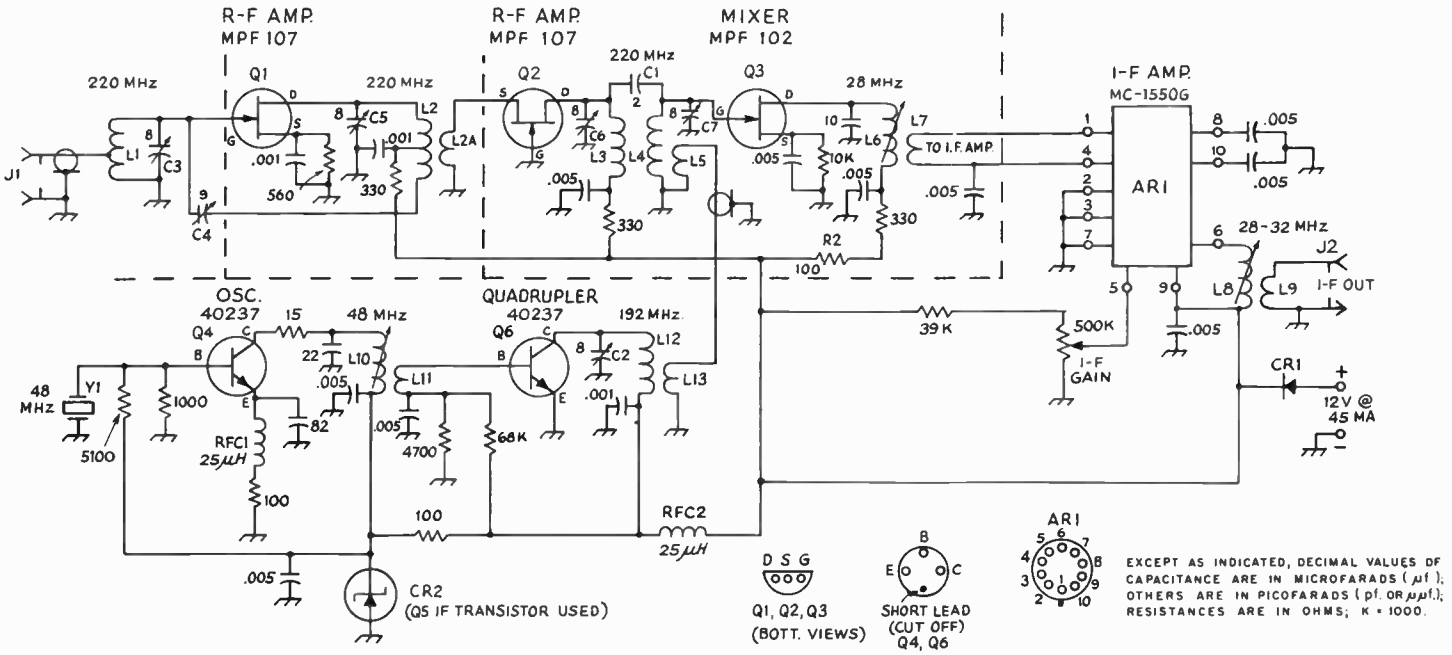

Fig. 9-14 — Schematic diagram and parts information for the 220-MHz converter. Only those portions wherein there are differences from the 144-MHz circuit of September 1967 *QST* are shown. Parts are labelled similar to those of the 144-MHz converter, wherever possible.

C1 — 2-pF, or 2 1-inch lengths of insulated wire, twisted six times.
C2, C3, C5, C6, C7 — 8-pF cylindrical ceramic trimmer (Centralab 829-7).
C4 — 9-pF subminiature trimmer (Johnson 189-503-4).
CR1 — Silicon diode, 50 PRV or greater, 200 mA or more.
CR2 — 9-volt Zener diode.
J1 — BNC coaxial fitting.
J2 — Phono jack.
L1, L3, L4, L12 — 3 turns No. 22, 1/4-inch dia, 1/4-inch long. Tap L1 at one turn from ground end.
L2 — 6 1/2 turns No. 22, 1/4-inch dia, 1/2 inch long. Tap at 2 turns from top end.
L2A — 3 turns insulated wire between turns of L2.
L5 — 1 turn insulated wire between bottom turns of L4.
L6, L8 — 1.6-2.8 μH (Miller 4503).
L7, L9 — 3 turns No. 26 enam. over cold ends of L6 and L8.
L10 — 7 turns No. 22 5/16 inch long, on 1/4-inch iron-slug form (Miller 4500-4 form).
L11 — 2 turns insulated wire over bottom turns of L10.
L13 — 1 turn insulated wire between first two turns of L12.
R1 — 500,000-ohm linear-taper control.
R2 — See text.
RFC1, RFC2 — 25-μH rf choke (Millen J-300-25).
Y1 — 48-MHz third-overtone crystal.

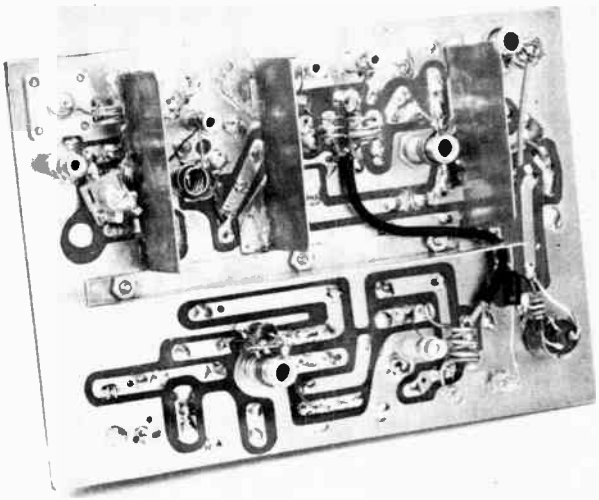

Fig. 9-15 — Interior of the 220-MHz FET converter. Minor differences from the 144-MHz model are discussed in the text. The rf, mixer and i-f amplifier circuits, left to right, occupy the upper half of the circuit board.

on 220. A dipper signal will do. It is also desirable to have a properly-matched antenna connected to J1, unless a good signal generator with 50-ohm termination is available for alignment purposes. If a random antenna must be used, put a 50-ohm resistor across J1 to simulate the eventual load, for neutralization purposes.

There may be no oscillation in the rf stages, regardless of tuning, if the converter is operated with a proper load. If this is the case it is merely necessary to adjust the neutralizing capacitor, C4, and the tuning of the input circuit, L1C3, for best signal-to-noise ratio on a weak signal. All other circuits affect only the gain and frequency response characteristics, so they can be adjusted for flat response across the desired frequency range, and there will be no sacrifice in the ability of the system to respond to weak signals.

Most realistic operation of the receiver's S-meter will be obtained if the meter adjustment is set so that there is an appreciable reading on noise only, with no signal. The converter i-f gain control is then set so that the meter reads S-0 or S-1, with the antenna on. In this way the relative strength of signals will be indicated on the meter, within the usual variations encountered. The receiver's antenna trimmer, if there is one, can also be used as an auxilliary gain control, and it will have no effect whatever on the sensitivity of the system.

SERIES-RESONANT BYPASSING

It is well-known that the inexpensive disk-ceramic and "dog-bone" types of capacitors are relatively ineffective for bypassing above about 100 MHz or so. This is due mainly to their considerable lead inductance, even when they are connected as close to the elements to be bypassed as possible. Actually this lead inductance can be used to advantage, by selecting lead lengths that make the capacitor series-resonant at the frequency to be bypassed.

This approach is recommended by WA2KYF, who supplied the information in Table 9-I, showing capacitor and lead-length combinations for effective bypassing of rf energy at frequencies commonly encountered in vhf work. The values are not particularly critical, as a series-resonant circuit is broad by nature. The impedance of a series-resonant bypass is very close to zero ohms at the frequency of resonance, and it will be lower than most conventional capacitors for a considerable range of frequency.

A high-capacitance short-lead combination is preferable to a lower value with longer leads, because the former will be less likely to allow unwanted coupling to other circuits. For example, a 100-pF capacitor with 1/4-inch leads is a better bet than a 25-pF with 1-inch leads, for bypassing at 144 MHz. The series-resonant bypass is worth a try in any circuit where instability is troublesome, and conventional bypassing has been shown to be ineffective. Screen, heater and cathode circuits are usually good candidates.

TABLE 9-I

Values of capacitance in pF required for resonance of frequencies commonly encountered in amateur-band vhf work, for leads of 1/4, 1/2 and 1 inch in length.

Frequency MHz	*1/4-Inch Leads*	*1/2-Inch Leads*	*1-Inch Leads*
48–50	800	400	200
72	390	180	91
96	220	100	56
144	100	47	25
220	39	20	10

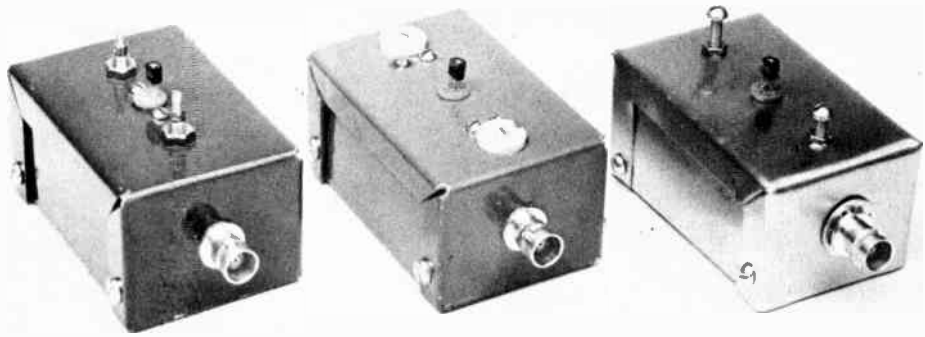

Fig. 9-20 — Transistor preamplifiers for 50, 144 and 220 MHz, left to right. Appearance is similar, except for the type of tuned circuit used.

FET PREAMPLIFIERS FOR 50, 144, AND 220 MHz

Where a vhf receiver lacks gain, or has a poor noise figure, an external preamplifier can improve its ability to detect weak signals. Some multiband receivers that include the 50-MHz band are not as good as they might be on 6. Converters for 144 MHz having pentode rf stages, or using some of the earlier dual triodes, may also need some help. Most 220-MHz converters are marginal performers, at best. The field-effect transistor preamplifiers of Fig. 9-20 should improve results with these, and with any other receivers for these bands that may not be in optimum working condition.

The circuits of the amplifiers are similar, though iron-core coils are used in the 50-MHz model, and air-wound coils in the other two. The common-source circuit requires neutralization. This is done with a capacitive feedback adjustment, rather than with the inductive circuit commonly used. A tapped input circuit is used in the 50-MHz amplifier, and capacitive input is shown for the other two, though this was done mainly to show alternative circuits. The output circuit is matched to the receiver input by means of C2. Many inexpensive transistors will work well in these

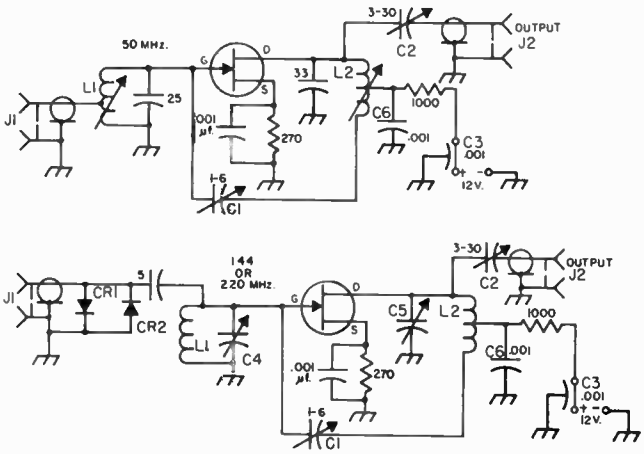

Fig. 9-21 — Circuit diagrams and parts information for the FET preamplifiers. Values of capacitors not described are in picofarads (pF).

C1 — 1.3 to 6.7-pF subminiature variable (Johnson 189-502-5).
C2 — 3 to 30-pF miniature mica trimmer.
C3 — 0.001-µF feedthrough (Centralab MFT-1000; FT-1000 in 220-MHz amplifier).
C4, C5 — 3 to 12-pF ceramic trimmer in 144-MHz amplifier; 1 to 6-pF cylindrical ceramic in 220.
C6 — 0.001-µF 50-volt mylar. Omitted in 220-MHz model.
CR1, CR2 — 1N34A or similar germanium diode.
J1, J2 — Coaxial fitting. BNC type shown.
L1 — 50 MHz; 7 turns No. 24 enamel in 1/4-inch iron-slug ceramic form, tapped at 3 turns from ground end (form is Miller 4500-4). 144-MHz; 3 turns No. 22, 1/4-inch dia, 3/8 inch long. 220 MHz; same, but with 2 turns 1/8 inch long.
L2 — 50 MHz; 10 turns like L1, but center-tapped. 144 MHz; 5 turns No. 22, 1/4-inch dia, 1/2 inch long, center-tapped. 220 MHz; Same but 4 turns.

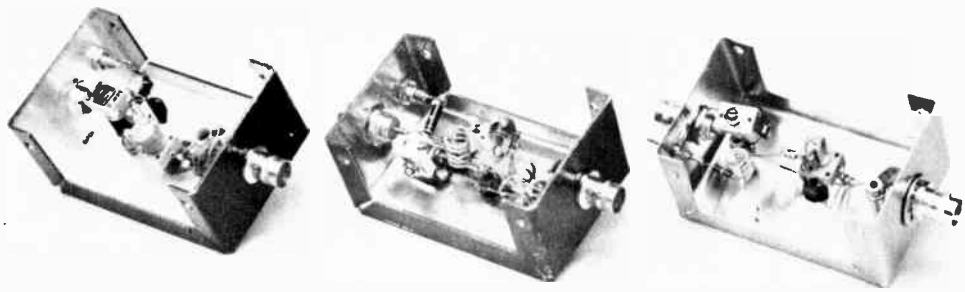

Fig. 9-22 — Interiors of the FET preamplifiers, in the same order as in Fig. 9-20. The input end is toward the right in each unit.

amplifiers. Motorola MPF-102, 104 and 106, all low-priced molded-plastic units and the more expensive metal-case 2N4416 were tried, and all were more than adequate. The MPF-102 is the least expensive, and, surprisingly, it was as good as any, even on 220 MHz. Careful readjustment is required when changing transistors, so the builder should not jump to conclusions about the relative merit of different types.

Construction

The amplifiers are built in small handmade boxes, aluminum for the 50- and 144-MHz models, and flashing copper for the 220-MHz one, but any small metal box should do. Those shown are 1 1/2 by 2 by 3 inches in size. The transistor socket is in the middle of the top surface, and the BNC input and output fittings are centered on the ends. The tuned circuits are roughly 3/4 inch either side of the transistor socket, but this should be adjusted for good layout with the parts available. Flat ceramic trimmers are used for tuning the 144-MHz amplifier, and the cylindrical type in the 220-MHz one. Sockets were used mainly to permit trying various transistors; they could be wired directly in place equally well. Printed-circuit construction would be fine, if you like this method.

Adjustment

The preamplifier should be connected to the receiver or converter with which it is to be used, with any length of coaxial cable, or by hooking J2 directly to the converter input jack with a suitable adapter. If you have a noise generator or signal generator, connect it to J1. If not, use a test signal from a grid-dip oscillator, or some other signal source known to be in the band for which the amplifier was designed. Preferably a matched antenna for the band in question should be hooked to J1, if a signal generator is not used. A 50-ohm resistor across J1 may be helpful if a random antenna is used for the adjustment work.

Set the neutralizing capacitor near half capacitance; then, with no voltage yet applied, tune the input and output circuits roughly for maximum signal. (The level may be only slightly lower than it would be with the converter or receiver alone.) Now apply voltage, and check current drain. It should be 4 to 7 mA, depending on the voltage. Probably there will be an increase in noise and signal when voltage is turned on. If not, the stage may be oscillating. This will be evident from erratic tuning and bursts of noise when adjustments are attempted.

If there is oscillation (and it is likely) move C1 in small increments, retuning the input and output circuits each time, until a setting of C1 is found where oscillation ceases, and the signal is amplified. All adjustments interlock, so this is a see-saw procedure at first. Increasing the capacitance of C2 tends to stabilize the amplifier through increased loading, but if carried too far will have an adverse effect on gain. The best setting is one where the input and output circuits do not tune too critically, but the gain is adequate.

The input circuit is first peaked for maximum signal, but final adjustment should be for best signal-to-noise ratio. This process is very similar to that with tube amplifiers, and the best point will probably be found with the input circuit detuned on the low-frequency side of the gain peak. In listening to a weak modulated signal, the fact that the noise drops off faster than the signal with a slight detuning is quite obvious. Typically the meter reading may drop about one full S-unit, while the noise level drops two S-units. The exact setting depends on the neutralization, and on the loading, both input and output, and can only be determined by experiment, with a noise generator or a weak signal.

Results

Because external noise is more of a limiting factor in 50-MHz reception than on the higher bands, tuning for best reception is not critical on this band. Very likely you can set the neutralization to prevent oscillation, peak the input and output circuits roughly, and you'll be all set. On 144 the job is fussier if the amplifier is to effect a real improvement, particularly if your receiver is a fairly good one. This preamplifier should get you down to the point where external noise limits your reception, for sure, if you were not there before. On 220 the preamp is almost certain to help, unless you already have an exceptional receiving setup,

and optimum performance is worth the trouble you take to get it. With all three, you should be certain that, if a given signal can be heard in your location, on your atenna, you will now be able to hear it.

Warning: If the preamp is to be used with a transceiver, be sure to connect it in the line to the receiver only, not in the main line from the transceiver to the antenna. It is best to do this before any work is done on the amplifier; otherwise you're sure to throw the send-receive switch inadvertently, and destroy the transistor.

If you're in doubt about the possibility of rf coming down the antenna line, connect protective diodes across the input, as shown with CR1 and CR2 in one of the circuits. Install these after the preamplifier tuneup, and check weak-signal reception with and without them, to be sure that they are not causing signal loss. Junction-type field-effect transistors are capable of withstanding much more rf voltage than bipolar transistors, so this kind of protection may not be needed in situations where it would have been mandatory with earlier types of transistor front ends.

A TWO-STAGE TRANSISTOR PREAMPLIFIER FOR 1296 MHz

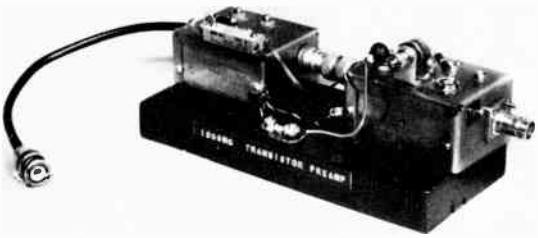

Fig. 9-23 — The two-stage preamplifier for 1296 MHz is built in separate units. The first stage is at the right. A jack for plugging in a small 9-volt transistor radio battery is shown in the foreground.

Transistor preamplifiers[1] have been instrumental in extending the reliable coverage of several 1296-MHz stations. A single rf stage will work very well with a crystal-mixer converter for this frequency range, if the mixer and its following i-f amplifier stage are already fairly low-noise devices. If they are not close to optimum in design, more rf gain than one transistor stage is capable of delivering may be needed to effectively mask the mixer and i-f amplifier noise.

This and the availability of improved uhf transistors suggests the use of a two-stage amplifier. The gain with two stages is around 19 dB, which is adequate to override the noise of all but the worst of mixers. With this much gain, and the low noise figure of the new transistors, the mixer and i-f amplifier are no longer critical factors in the overall performance of the 1296-MHz receiving system.

The two stages are built in separate units, though they could be combined in one, if desired. Separation has the advantage of permitting the builder to start with one stage, and then progress to two if the additional gain is needed. The transistors may be either the 5200 or 5500 series. The latter has more gain, and is probably better for the second stage.

[1] "A 1296-MHz Preamplifier — That Works!" — Katz, November, 1967, *QST*, page 32.

Construction

Transistors used in early work with 1296-MHz amplifiers had wire leads. The KMC KC5200 and K5500[2] used here have flat ribbon leads, making possible a mounting having substantially no lead inductance. The "accordion-pleated" shield plate shown in Fig. 9-24 suspends the transistor on its emitter leads, with the base lead on one side and the collector lead on the other. These two leads are soldered to their respective strip lines, L1 and L2, with the minimum possible length.

The input and output coupling capacitors are no-lead disks, though conventional disk ceramics may be used if the minimum possible lead length is assured. Their value is not particularly critical. The tuning capacitors, C1 through C6, should be high-quality short piston or coaxial capacitors, 3/4 inch center to center.

In the two photographs the first stage is shown at the right side. The boxes are handmade of thin sheet brass. Standard aluminum Miniboxes could be used, though brass or copper facilitates soldering direct to the case. The shield in the first stage should extend nearly the full width and height of the box. This is not so important in the second stage, which has a tuned circuit only on the

[2] Most transistor makers now produce types capable of working well above 1000 MHz. Usually these have small tablet-shaped cases, and flat ribbon leads, for minimum lead inductance. All are fairly expensive.

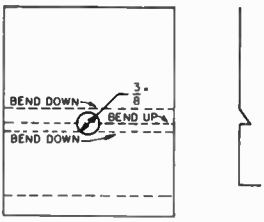

Fig. 9-24 — Details of the thin brass shield plate used to support the transistor in the first rf amplifier stage. Dimensions will depend on the case size and height of the tuning capacitors used. The emitter leads are soldered to the horizontal "shelf" made by bending the plate as seen in the end view. (Designed and built by D. Vilardi, WA2VTR.)

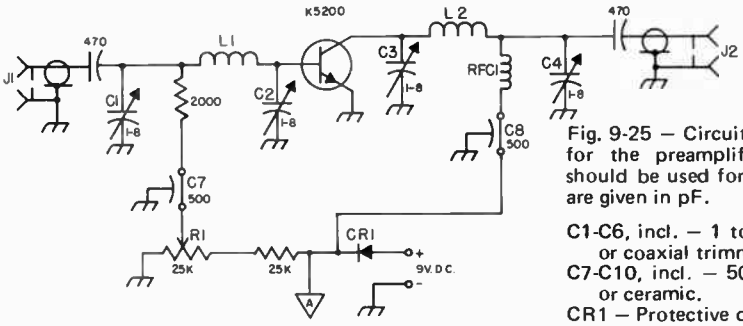

Fig. 9-25 — Circuit diagram and parts information for the preamplifier stages. The upper portion should be used for a single stage. Capacitor values are given in pF.

C1-C6, incl. — 1 to 8 pF high-quality short piston or coaxial trimmer (Johanson used here).
C7-C10, incl. — 500-pF feedthrough, button mica or ceramic.
CR1 — Protective diode, 10 mA or more.

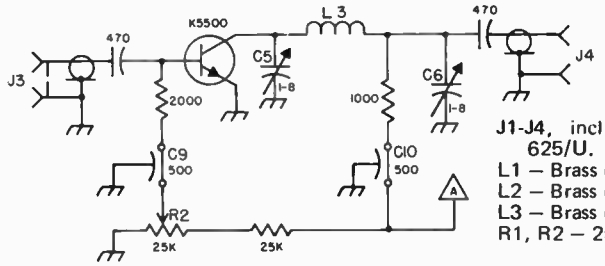

J1-J4, incl. — BNC receptacle, UG-290/U or 625/U.
L1 — Brass or copper strip, 5/8 by 3/4 inch.
L2 — Brass or copper strip, 1/4 by 3/4 inch.
L3 — Brass or copper strip, 1/2 by 3/4 inch.
R1, R2 — 25,000-ohm miniature control.

output side. The bent brass mounting plate in the second stage is primarily to insure minimum emitter lead inductance.

The interior views show the input sides at the bottom. It will be seen that the strip for the input circuit, L1, is wider than that for the output, L2. The transistor has higher input than output capacitance, requiring less inductance in the input circuit. All strip inductors are brass and are 3/4 inch long. They are soldered directly to the tops of the tuning capacitors and are pi-networks.

Adjustment

A signal source is necessary in tuning up the preamplifier. Most small two-meter transmitters put out enough energy on the 9th harmonic to be plainly audible at 1296 MHz. Transistorized "beacons" commonly used by amateur uhf experimenters are fine. Anything strong enough to be heard on the converter, without the preamplifier, will serve. Just be sure that, if you are listening to harmonic, it is the *right* one.

Initial peaking can be done with no voltage on the preamp. If a 50-ohm antenna is used the tuned circuits will be close to optimum adjustment if peaked first in this way. The same is true if one is fortunate enough to have a 1296-MHz signal generator with 50-ohm termination.

Now apply about 5 to 6 volts, and check the current on each transistor. Adjust the bias controls, R1 and R2, for 1 to 2 mA on the 5200 and 2 to 15 mA on the 5500. Now reduce the strength of the signal and adjust the tuned circuits for maximum response. Readjust the bias for minimum noise on the first stage and maximum gain on the second. *Do not exceed 4 mA on 5200.*

The preamplifier as shown has a socket for plugging in a small 9-volt transistor radio battery. This may now be used, and a final peaking and bias adjustment made for best results. Bear in mind that optimum signal-to-noise ratio is the objective. This can be achieved by careful adjustment of the first stage, and it is not likely to be the same as for maximum signal level. The second stage can be used as a gain control, to some extent, though this is best done in the first i-f amplifier. The gain of the two stages is about 19 dB, when the system is adjusted for best noise figure. Not many amateurs will be able to measure noise figure accurately at this frequency, but it should be under 5 dB. A system noise of 3 dB is possible with these transistors at 1000 MHz, but at 1296 MHz it may be slightly higher.

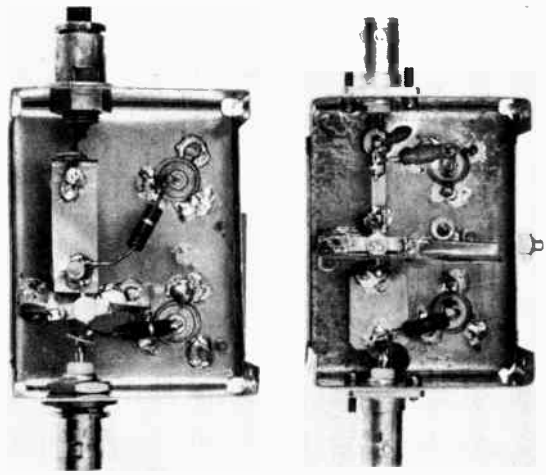

Fig. 9-26 — Interior views of the two preamplifier stages, again with the first stage at the right. The input ends are toward the bottom of the picture.

A LOW-NOISE 432-MHz CONVERTER

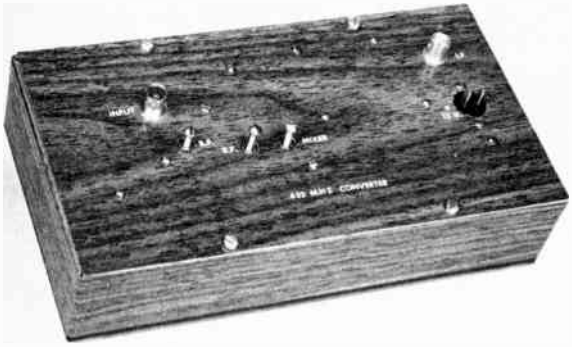

Fig. 9-27 — The 432-MHz converter is built on the cover plate of a standard aluminum chassis. The "cigar-box effect" results from application of contact paper with simulated wood-grain finish to all exposed surfaces.

There is usually great emphasis on the need for a good low-noise uhf transistor in at least the first stage of a 432-MHz converter, but the rf stage or stages cannot do the whole job. Good front-end design is often hampered by deficiencies elsewhere in the converter. These can include inadequate injection to the mixer, and poor noise figure in the stage immediately following the mixer. The converter described here does well with a single rf amplifier stage, because the mixer has plenty of injection, and it is followed by a low-noise i-f amplifier. The latter is especially important when the intermediate frequency is in the 28-MHz range, as some communications receivers have rather poor noise figure and gain in this region.

Circuit

The rf amplifier uses a 2N5032 uhf bipolar transistor, with grounded emitter, and neutralization. This gives more gain than the commonly used grounded-base circuit, so only one rf stage is needed to override mixer noise and establish the noise figure of the system. Tuned lines are used in the input, collector and mixer-input circuits, for some selectivity and rejection of unwanted frequencies. The segment of the band near 432 MHz used for weak-signal work is so narrow that rf selectivity presents no problems. The amplifier collector current is adjusted for optimum signal-to-noise ratio by varying the base bias, by means of R1. The bias source is Zener-regulated by CR1.

The mixer is a Schottky-barrier diode, CR2. It works into a 28-MHz i-f amplifier stage using an integrated circuit. The amplifier may not be needed with communications receivers that work well in the 10-meter range, but it adds little to the cost and complexity of the converter, and its gain control, R2, is handy for setting the converter gain to the optimum level for any receiver.

The injection system uses more transistors and components than most converters have for this purpose, but the string of doublers is easy and inexpensive to build, and it produces injection voltage to spare. Use of a starting frequency of 50.5 MHz makes checking the oscillator a simple matter if the builder has a 50-MHz receiver. A tuned-line filter, loosely-coupled to the last doubler, helps to suppress unwanted products of the multiplier system.

Construction

The converter is built in three principal subassemblies, mounted on an aluminum plate that fits the top of a 5 X 9 1/2 X 2-inch chassis, thereby providing complete shielding. An L-shaped bracket, 1 7/8 inches high and 8 1/2 inches long, supports the oscillator-multiplier assembly. The injection circuit board is mounted with 3-48 screws and short metal spacers, to provide lead clearance. Output from the tuned-line filter, C14L17, is taken off through L18 and small coax to the mixer.

Small screws and spacers are also used to mount the i-f amplifier to the cover plate. A small pc-type control, R2, reached through a hole in the side of the chassis, is used for gain adjustment. If the converter is to be used with several receivers, a

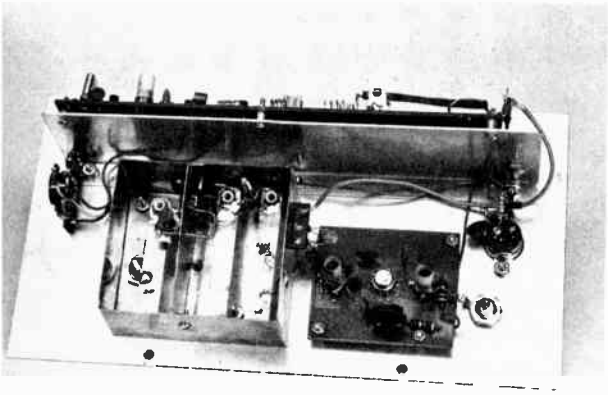

Fig. 9-28 — Interior of the 432-MHz low-noise converter, showing the rf and i-f amplifier assemblies. Strip-lines in the rf assembly are, left to right, L1, L3 and L4. The wire loop coupled to L3 is the neutralizing device, L2, with a capacitor tab coupling to L1. The small mixer diode is just visible, close to the right side of the rf assembly. The 28-MHz i-f amplifier is the square circuit board at the lower right.

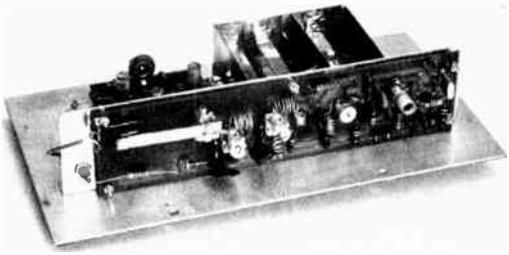

Fig. 9-29 — The oscillator-multiplier assembly is on a circuit board mounted on a full-length aluminum bracket that provides both support and shielding. The crystal oscillator is at the right end. The strip-line at the left end is L17, the tuned circuit of a 404-MHz filter in the output of the last doubler stage.

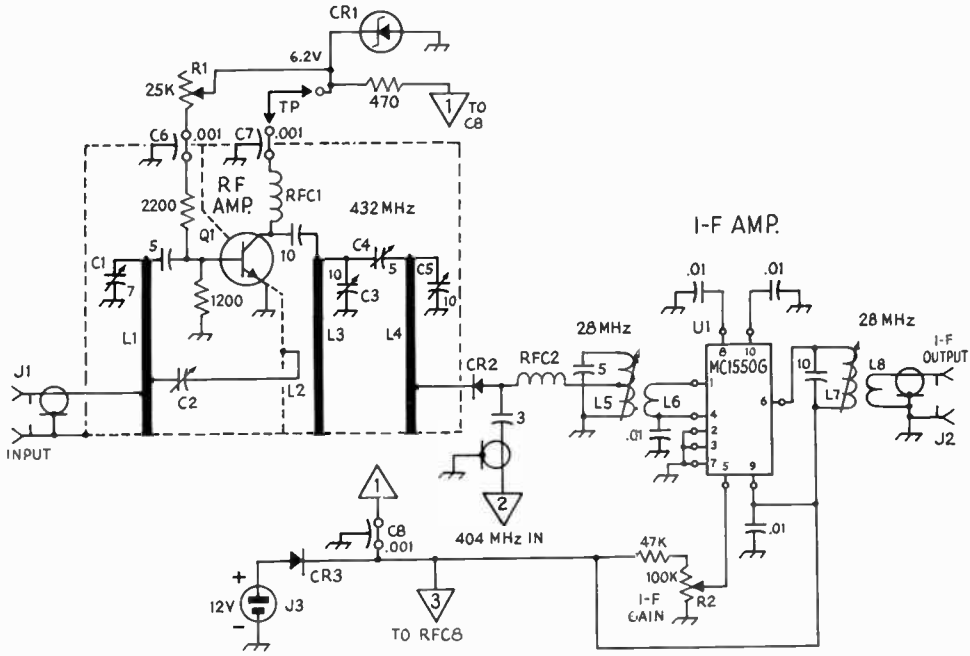

Fig. 9-30 — Schematic diagram and parts information for the rf and i-f portions of the 432-MHz converter.

C1 — 7-pF cylindrical trimmer (Centralab 829-7).
C2 — Copper tab 1/4 inch square, about 1/8 inch over L1, 1 5/8 inches from ground end. Adjust spacing for neutralization.
C3, C5 — 10-pF cylindrical trimmer (Centralab 829-10).
C4 — 5-pF piston trimmer.
C6, C7, C8 — .001-µF feedthrough (Erie 662-003-102K). C7 and a lug on the tie-strip serve as test points, and should be joined by a jumper when no meter is connected.
CR1 — 6.2-volt Zener diode.
CR2 — Hot-carrier diode (Hewlett-Packard 2811).
CR3 — 1-A, 100-PRV diode (Int. Rect. 5A1).
J1, J2 — BNC coaxial jack.
J3 — 2-pin polarized power connector.
L1 — Copper strip 3/8 by 2 1/4 inches after bending. Tap at 7/8 and 1 3/4 inches from ground end.
L2 — No. 24 enamel 1 11/16 inches long, bent as shown in Figs. 9-28 and 32.
L3, L4 — Copper strip 3/8 by 2 9/16 inches long after bending. Tap L4 3/4 inch from ground end.
L5, L7 — 20 turns No. 30 enamel on .162-inch slug-tuned form (Miller 27A013-7). Tap L5 10 turns from ground end.
L6, L8 — 3 turns small enameled wire over cold ends of L5 and L7.
Q1 — Low-noise uhf npn transistor, Motorola 2N5032.
R1 — 25K control, pc-type mounting (CTS R253B — Allied).
R2 — 100K control, pc-type mounting (CTS R104B — Allied).
RFC1 — .22-µH rf choke (Miller 4584).
RFC2 — 6 turns No. 26 enamel 1/8-inch dia, 3/8 inch long.
U1 — Motorola MC1550G integrated circuit.

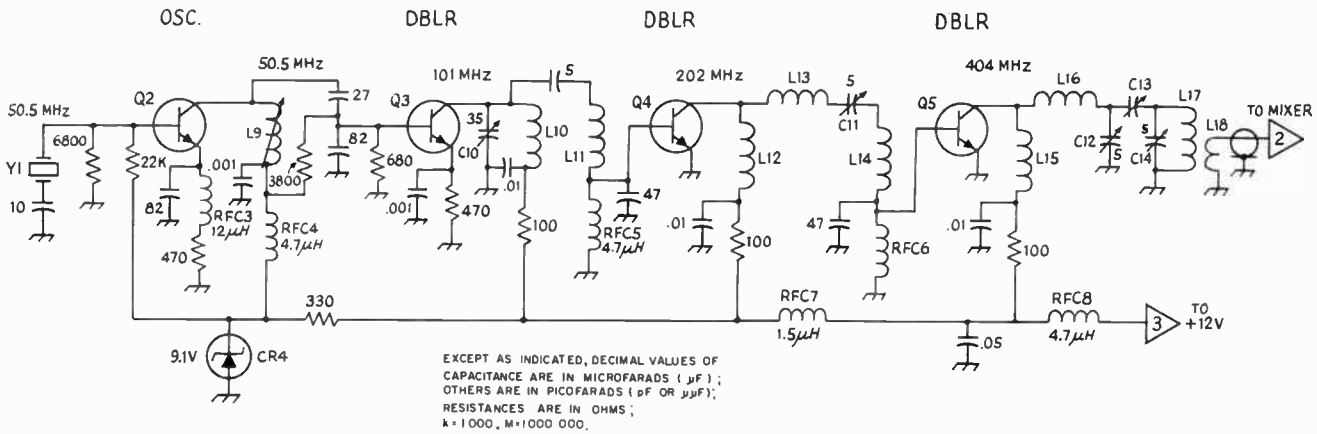

Fig. 9-31 — Schematic diagram and parts information for the oscillator-multiplier stages of the 432-MHz converter.

C10 — 35-pF ceramic trimmer.
C11, C12, C14 — 5-pF miniature trimmer (Johnson 189-504-5).
C13 — 1/4 by 3/8-inch copper tab. See Fig. 9-32 and text.
CR4 — 9.1-volt Zener diode.
L9 — 6 turns No. 26 enamel on .162-inch slug-tuned form (Miller 27A013-7).
L10 — 6 turns No. 22, 3/16-inch dia, 1/2 inch long.
L11 — 7 turns No. 24 enamel, 3/16-inch dia, closewound.
L12, L14 — 4 turns No. 22, 3/16-inch dia, 3/8 inch long.
L13 — 4 turns No. 22, 1/4-inch dia, 3/8 inch long.
L15 — 5 turns No. 28 enamel, on 1/2-watt resistor.
L16 — 4 turns No. 22, 1/2-inch dia, 1/2 inch long.
L17 — Copper strip, 5/16 by 2 1/2 inches. Bend at ground end, so that when run through the circuit board it will lie parallel to it, at the height of the stator of C14. See Fig. 9-29.
L18 — Hairpin loop, No. 24 enamel. Portion coupling to L17 is 3/8 inch wide and 5/8 inch long. Mount on small tie-strip at upper left corner, as seen in Fig. 9-29.
Q2-Q5, incl. — Vhf npn transistor (Motorola MPS3563).
RFC3, RFC4, RFC5, RFC7, RFC8 — Small rf chokes, values as indicated on drawing.
RFC6 — 2 turns No. 26 enamel through ferrite bead.
Y1 — Third-overtone crystal, 50.5 MHz (International Crystal Type EX).

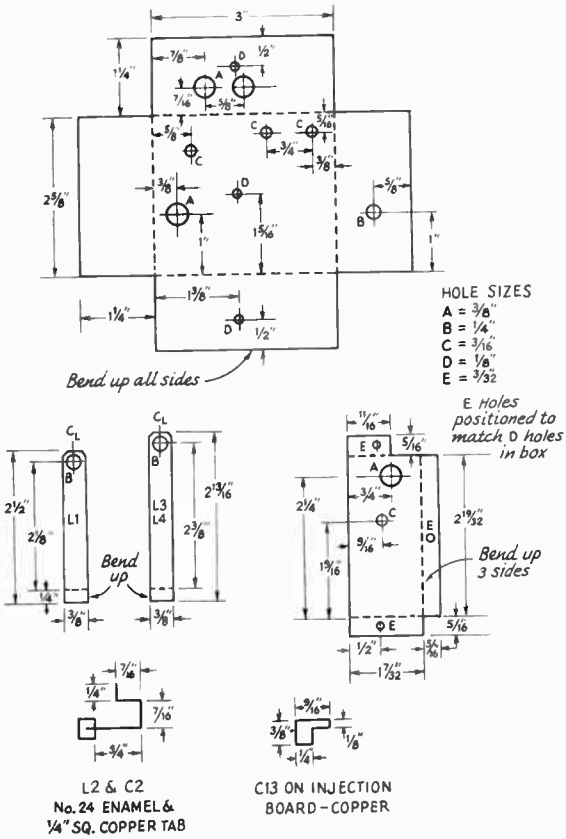

Fig. 9-32 — Details of the copper parts of the rf amplifier and mixer assembly. It is suggested that layout work and drilling be done before the sheet of flashing copper is cut, as drilling of small pieces of thin metal is difficult.

shaft-type control could be substituted, and mounted on the cover or chassis, to facilitate readjustment, as needed. Lead lengths to R2 are not critical.

The rf amplifier enclosure and tuned lines are made of flashing copper. Dimensions are shown in Fig. 9-32. All holes should be drilled before cutting the metal and bending it to shape. Corners are soldered for rigidity and rf shielding. The lines, L1, L3 and L4, should be laid out and drilled before cutting the strips apart, as it is difficult to drill a clean hole in a narrow strip of flashing copper. The ends of the strips are bent up and soldered to the inside of the box.

A shield partition isolates the input line from the collector line, and also supports the transistor, Q1, which is mounted in a small hole near one end of the shield. The emitter lead is connected to the input side of the shield and the case lead to the collector side. Both leads are grounded by a 2-56 screw and nut, with no soldering needed. The entire assembly (the shield, Q1, R1, C2 and L2) can be completed before it is fastened in place with small sheetmetal screws. Note the "sense" of the neutralizing loop, L2. The grounded end is toward the transistor, and the hot end goes through a hole in the shield, toward the grounded end of the tuned lines. Cover the wire with insulating sleeving where it passes through the hole.

The coupling capacitor C4 is supported by its own leads, between L3 and L4. The mixer diode, CR2, is tapped on L4, through a hole in the side of the enclosure, and is supported on a small tie-strip, outside the assembly. The 3-pF injection-coupling capacitor, one end of RFC2, and the end of the small coax from the injection board are also supported by this strip.

Adjustment

Alignment of the oscillator-multiplier chain requires a dip meter or calibrated absorption wavemeter. To protect the amplifier transistor, Q1, do not apply voltage to it, or the bias-adjusting network, until all other stages are checked out. The oscillator should be checked to be sure that it is working only on the marked frequency. Improper adjustment of the coil L9 may allow oscillation on the crystal fundamental, about 16.83 MHz, and output at 50.5 MHz will be much too low to drive the following stages properly. There should be no evidence of rf in the 16-MHz region, or on twice the fundamental frequency. Be sure that the core tunes L9 *through* the crystal frequency.

Peak each doubler stage for maximum output at the desired frequency. If no indicator for 404 MHz is available, a simple Lecher-Wire[1] setup can be used, with a diode and milliammeter, to be sure that this circuit peaks properly. Injection on the proper frequency should also cause a noise increase in the communications receiver, at 28 MHz. The copper tab, C13, provides loose coupling to the stator of C12. Adjustment is not critical, and a spacing of about 1/8 inch should be about right. There is some coupling between the tuned line and the chassis, causing detuning and loss of injection, when the converter is assembled in its case. The circuit can be repeaked through a small hole drilled in the bottom of the chassis.

Moving the i-f gain control through its range should cause a smooth change in noise level at 28 MHz. L5 and L7 can be peaked roughly on noise, or on a 28-MHz signal.

The mixer tuning should result in a small noise increase as C5 is peaked. This adjustment can be made by using a harmonic of the dip oscillator, or the third harmonic of a 2-meter transmitter, for a test signal.

The rf amplifier can now be adjusted. Before voltage is applied to this stage, a 50-ohm resistor should be connected across J1, or a signal generator with a built-in termination should be used. The bias-adjusting control, R1, should be set at maximum resistance, and a 10-mA meter

[1] A Lecher-Wire device is described in *The Radio Amateur's VHF Manual*, chapter 14. A slotted line that can be used for uhf frequency measurement is described in *QST* for January, 1969.

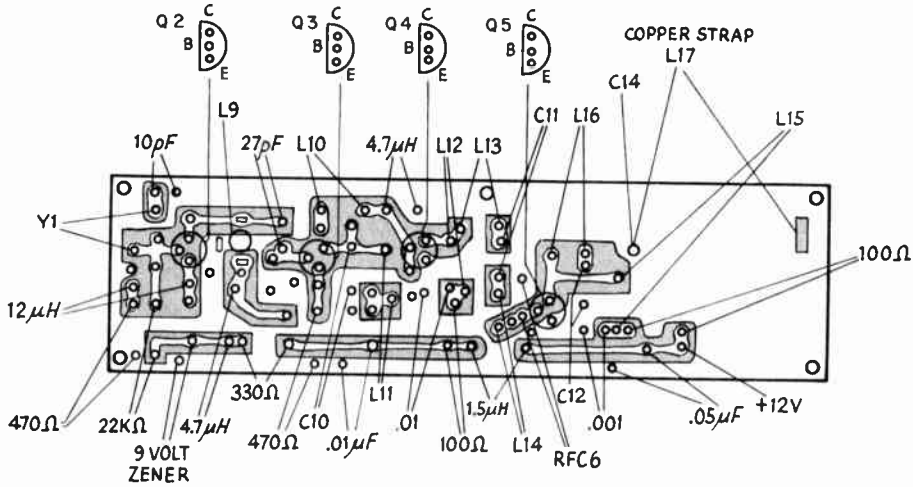

Fig. 9-33 — Half-scale drawing of the injection board, foil side.

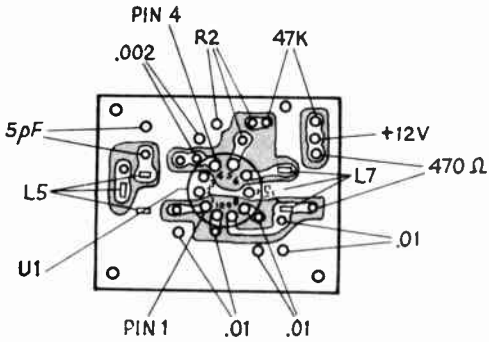

Fig. 9-34 — Half-scale drawing of the i-f amplifier board, foil side.

connected in place of the jumper across the test points in the lead to RFC1. Be sure that solid connections are made, as accidental application of base bias, with no collector voltage, can ruin the transistor. A safer arrangement might be to use a lower-range meter, with a suitable permanent shunt connected between the test points. The meter can then be removed from the circuit safely.

The collector current should be set to around 2 mA by adjustment of R1. Tune C1, C3, C4 and C5 for maximum response to the test signal, watching the collector current for any sign of change. Such fluctuation, or bursts of noise or rough-sounding notes in the receiver, indicates oscillation in the rf stage. The positions of the coupling loop, L2, and the capacitor tab, C2, should be adjusted to stop oscillation, if any is encountered.

After the converter has been stabilized, adjust the collector current for best signal-to-noise ratio, using a weak test signal. The data sheet for the 2N5032 indicates that best noise figure should be obtained with about 1 mA. Other good uhf transistors may require different values of collector current. Usually it will be found that highest gain will occur with somewhat more collector current than that giving the best signal-to-noise ratio, so it

TABLE 9-II

Crystal frequencies recommended for use with popular vhf and uhf converter i-fs

Band MHz	*Crystal frequency for i-f range from* 7 MHz	14 MHz	28 MHz	30.5 MHz
50	43.0 MHz	36 MHz	22.0 MHz	19.5 MHz
144	45.667 MHz	43.333 MHz	38.667 MHz	37.833 MHz
220	53.25 MHz	51.5 MHz	48.0 MHz	47.375 MHz
432	—	46.44 MHz	44.9 MHz	44.611 MHz

Other i-f tuning ranges can be used, but will require different crystal frequencies and suitable L-C combinations in the multiplier chain to effect proper resonance.

TABLE 9-III

Required mixer injection frequencies from the oscillator chain when using the tunable i-f ranges listed in Table 9-II. Ordinarily, the crystal frequency is multiplied 3 times in 144-MHz converters, 4 times for 220 MHz and 9 times for 432.

Band MHz	*Injection frequencies for i-fs of* 7 MHz	14 MHz	28 MHz	30.5 MHz
50	43 MHz	36 MHz	22 MHz	19.5 MHz
144	137 MHz	130 MHz	116 MHz	113.5 MHz
220	213 MHz	206 MHz	192 MHz	189.5 MHz
432	——	418 MHz	404 MHz	401.5 MHz

is important to make all tuning adjustments and current setting for the latter quality. Gain can be made up in the i-f stage.

An additional check can be made to be sure that the oscillator-multiplier string is giving the mixer adequate injection voltage. If it is, and if the rf stage is working properly, the injection can be reduced enough to cause the converter gain to drop several dB, before the signal-to-noise ratio is adversely affected. If adequate gain is available elsewhere in the converter, the best overall performance will generally be obtained with the injection level toward the lowest that will give good signal-to-noise ratio.

A SOLID-STATE CONVERTER FOR 1296 MHz

This converter is an adaptation of the classic design by W6GGV which appears in *The ARRL Radio Amateur's VHF Manual* and in September 1962 *QST*. The version shown here was worked out by WB2EGZ and uses transistors in place of the tubes which the earlier version had. The entire converter operates from a 12 to 15-volt supply.

The front end uses a simple crystal mixer in a trough-line circuit. The 1296-MHz preamplifier described in this chapter can be added ahead of the mixer for improved noise figure and greater overall converter gain, though used by itself the converter will give good results.

Oscillator Chain

Bipolar transistors are used in the oscillator/multiplier section of the converter, Fig. 9-36. A 57.6-MHz overtone crystal is used at Y1 to provide oscillator output on that frequency. A doubler, Q2, increases the frequency to 115.2 MHz. A push-push doubler is used at Q3 and Q4 to bring the output frequency to 230.4 MHz. Final injection to the mixer diode is provided at 1152 MHz to obtain an i-f of 144 MHz. (This i-f signal is fed into the 2-meter station converter which serves as the first i-f.) A multiplication factor of five is provided by supplying the 230.4-MHz signal to a diode multiplier in the first trough line. A bias resistor is used across the multiplier diode. Its optimum value should be determined experimentally, starting at 27,000 ohms and increasing or decreasing the resistance in steps of 50 percent. The final value will depend upon the type of diode used for the multiplier. The bias value that produced the best noise figures in this converter provided a mixer current in the range of 0.2 to 1 mA. A value of 82,000 ohms seemed to be best for a DR303 diode. With a 1N914 a value of 5000 ohms was suitable.

The Trough-Line Assembly

The trough-line section of the converter is shown in schematic and pictorial form in Fig. 9-38. It is constructed of sheet brass (copper will also

Fig. 9-35 — Outside view of the 1296-MHz converter. The oscillator chain is built on the left end of the box. Heat sinks are used on transistors Q2, Q3, and Q4. A 5 X 9 1/2 X 2-inch aluminum chassis is used as a foundation.

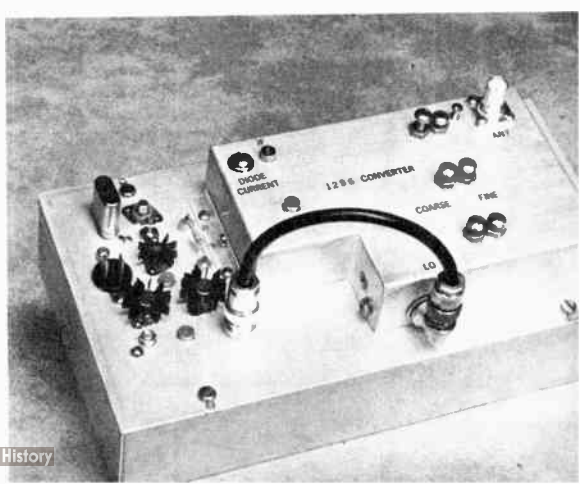

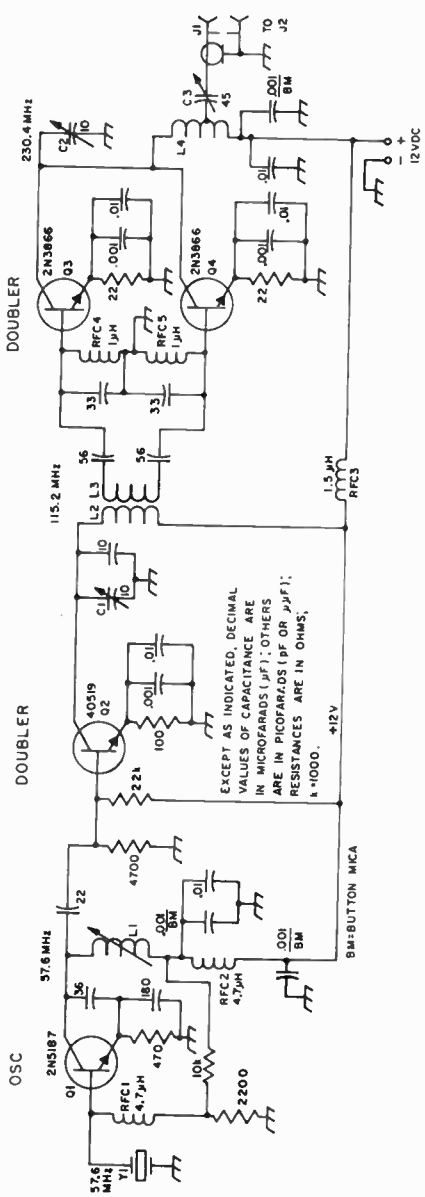

Fig. 9-36 — Schematic diagram of the oscillator chain. Fixed-value capacitors are silver mica unless otherwise noted. The 0.01-μF capacitors are disk ceramic. Resistors are 1/2-watt carbon.

C_1, C_2—10-pF piston.
C1, C2 — 10-pF piston.
C3 — 8-45 pF ceramic trimmer.
J1 — BNC chassis connector.
L1 — 0.162 to 0.264-μH inductor (J. W. Miller 20A227-RBI).
L4 — 2 turns 1/8-inch wide copper strip, 1/4-inch dia, 1/2-inch length. Tap 1/2 turn from collector end.

Q1-Q4, incl. — RCA transistor.
RFC1, RFC2 — 4.7-μH rf choke (Miller 9310-28 or equiv.).
RFC3 — 1.5-μH rf choke (Miller 9310-16 or equiv.).
RFC4, RFC5 — 1-μH rf choke (Miller 9310-12 or equiv.).
Y1 — 3rd-overtone crystal (International type EX).

do), 0.025 to 0.050 inch thickness. The assembly should be laid out as shown in Fig. 9-37A, then the holes drilled and tapped as shown. Before the bends are made, cut along the dotted line labeled "saw cut." (A sheet-metal shop will bend the assembly for a nominal fee should the constructor feel that he can not do the job satisfactorily.)

After the bends are made, solder the partitions in place with a torch and intermediate or hard solder. The seams along the edges of the box should be soldered in a like manner. The unit can be silver plated after all soldering is completed, though this is not necessary for good operation.

When the partitions have been soldered in place, insert the coarse-tuning screws, after first having run an 8-32 nylon nut up to the head of each screw. Now solder a large 8-32 brass nut to the end of each screw. Do this quickly and with a minimum of heat, and do not disturb the nylon nuts until the screws have cooled completely. Now insert the fine-tuning screws, each with nylon nuts, as before, but do not solder the brass nuts to these screw ends.

Now insert the 3/8-inch hollow brass lines in place (in 6 holes marked A, Fig. 9-38B) and soft-solder. File the inside surface of the i-f

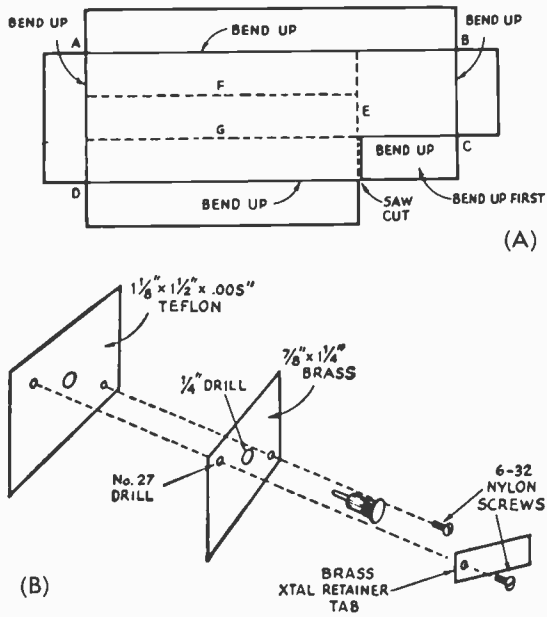

Fig. 9-37 — Bending details for the trough-line assembly. At A, the dotted lines show where bends are to be made. Details for making the uhf bypass capacitor C10 are given at B. These mount on the left edge of the i-f output section, as seen in the bottom view. Locations of the mounting holes are not critical.

compartment, partition E, completely smooth, so that no sharp projection will puncture the insulation that is part of the uhf bypass capacitor. Next, a contact pin removed from an octal socket is soldered to partition F, at the deepest point of the aperture, to make contact in a positive and secure manner with the tip of the mixer diode. Solder a 2-inch length of No. 18 wire to the brass plate (see Fig. 9-38A) for making connection to the i-f output coil later. The combination crystal-retaining plate and uhf bypass capacitor is shown in Fig. 9-37B. This may be assembled with nylon screws as shown, but if these are not available, insulating shoulder washers and brass screws will do equally well.

Next, referring to Fig. 9-35, the feedthrough capacitor, C10, L bracket and closed-circuit jack for monitoring crystal mixer current are mounted as shown in the top-view photograph. The three BNC connectors are then mounted, along with the 7-turn i-f coil and tuning capacitor, L9 and C10. The appropriate-sized hole is then carefully drilled in partition E at the end of the multiplier compartment to accommodate the small trimmer capacitor, C4. The small 4-turn coil, L10, is soldered from the BNC connector to the trimmer, and the multiplier diode is soldered to the line approximately 1 1/4 inches from the inside wall of partition E. The optimum point will have to be determined later on, but this is a good place to start.

Connect the mixer output to the i-f coil, using the 2-inch No. 18 lead previously soldered on the capacitor plate, 1 1/4 turns from the cold end of the i-f coil. This connection will be adjusted later for maximum output. The i-f output coupling loop, L10, is installed with loose coupling to the cold end of the i-f coil.

The antenna coupling tab is a piece of thin brass which is 1 inch long and 3/16-inch wide, C9. It is soldered to the center contact on the BNC connector, J3. An insulated adjustment screw is mounted on the top surface of the trough line, and is used to raise and lower the tab for optimum coupling. The tab runs parallel to L8, between L8 and the top of the trough. It is shown along side L8 in the drawing for purposes of illustration. The tab and J3 are both *under* L8 in the actual case. A No. 6 hex nut can be soldered to the inner wall of the trough, then a nylon No. 6 screw used to adjust the tab. Spring brass might be substituted for the tab if greater resiliency is desired. Alternatively, the antenna lead can be tapped on a line L8 until optimum coupling is realized.

Converter Adjustment

Following construction of the multiplier chain and the trough-line assembly, apply power to the multiplier and tune up. With the voltage specified, the output at 230.4 MHz should be capable of providing up to 1 mA of crystal current. If the

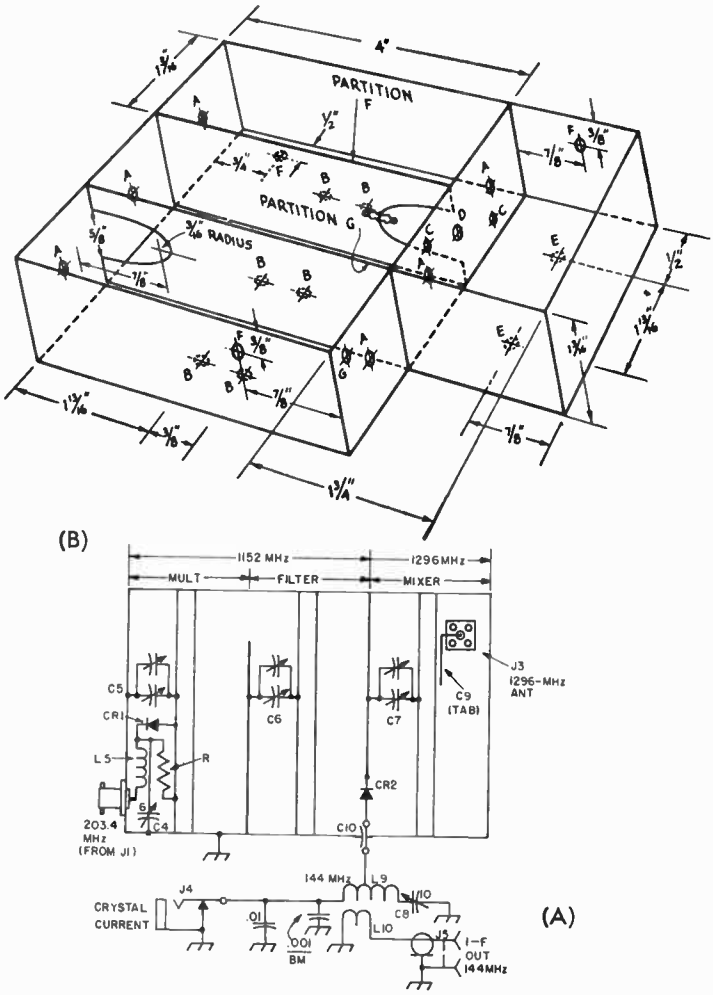

Fig. 9-38 — A schematic representation of the trough-line assembly is shown at A. Dimensions for the enclosure can be taken from the illustration at B.

CR1 — 1N914, DR303, or equiv. diode.
CR2 — See text.
C4 — 6-pF piston trimmer.
C5-C7, incl. — See text.
C8 — 10-pF piston trimmer.
C9 — Coupling tab (see text).
J2, J3 — BNC chassis connector.
J4 — Closed-circuit phone jack.
L5 — 4 turns No. 26 enam., close-wound, 1/16-inch dia.
L6-L8, incl. — 3/8-inch hollow brass lines.
L9 — 7 turns No. 18, 1/4-inch dia, 7/16 inch long. Tap at 1 1/4 turns.
L10 — 2 turns No. 24 insulated wire inserted between turns of L9. Twist leads to coax fitting.
R — Bias resistor. See text.

output is much less than this, the preceding stages should be checked carefully, and adjusted until the output equals or exceeds the amount required.

The multiplier trough may be preset by turning the coarse-tuning screw until it bottoms on the trough line, then backing off approximately one turn. Set the fine-tuning capacitor to a depth of approximately 1/4 inch in the trough. Set the coarse- and fine-tuning adjustments in the filter-mixer trough in the same manner.

The trimmer in the diode multiplier circuit should be set to three-quarter capacity. Insert the mixer crystal (a 1N21F, or G, is preferable, but almost any of the 1N21, 1N23 series will do, if an rf amplifier is used with the converter), and plug a 0-1 mA meter into the mixer current jack. Couple

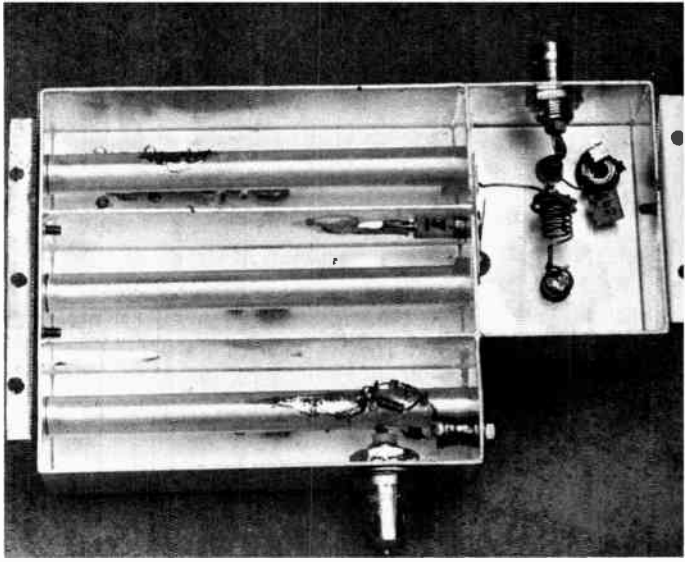

Fig. 9-39 — Inner view of the trough-line assembly. The i-f output circuit is in the compartment at the upper right. The BNC jack at the lower center connects to the oscillator chain output. The antenna input jack is obscured by the trough line at the upper left. It and the coupling tab are under the tubing.

the multiplier chain to the crystal multiplier with coax and BNC fittings. With power on the multiplier chain, a slight deflection should be noted on the meter. If no deflection is noted, make sure that the 1296-MHz by-pass capacitor, C10, is not grounded. Caution: Remove the mixer crystal before measuring with an ohmmeter. If there is still no deflection, use a grid-dip oscillator tuned to 230 MHz and lightly couple into the crystal-multiplier trough. Adjust the tuning screws for maximum dip. A slight indication should now be seen on the milliammeter. Adjust the coarse tuning on both the multiplier and filter troughs for maximum meter indication. Next adjust the fine-tuning and trimmer capacitors for peak crystal mixer current. Adjust the diode multiplier tap on the trough line for maximum mixer current, being careful not to apply too much heat to the leads of the diode when soldering. A pair of long-nosed pliers will conduct most of the heat away if used to hold the diode pigtail during the soldering operation. When all adjustments have been completed, a reading somewhere between 200 μA and 1 mA should be readily attainable, depending on the type of multiplier and mixer crystal used.

The injection frequency is 1152 MHz, the fifth harmonic of the multiplier chain. The trough will not tune to the fourth harmonic of the driver, but it will tune to the sixth, 1382.4 MHz. For this reason it is best to begin tuning adjustments from the maximum-capacity side.

If you have access to a stable 1296-MHz signal generator, the rest is easy. A local 1296-MHz amateur signal will serve nicely, or you may have to build a 1296-MHz beacon. This is not too difficult. Use a 54-MHz third-overtone crystal in a transistor oscillator circuit and feed the output to a diode multiplier trough similar to the one described here. The entire unit can be built in a small box about 2 by 3 by 4 inches, including the battery power supply.

Pretune the i-f coil to 144 MHz with a grid-dip oscillator. Connect the i-f output to a good 144-MHz converter and the input signal to the converter. Tune the signal trough and i-f tuning capacitor for maximum signal. Adjust the tap on the i-f coil for best match. This point will be 1/2 to 2 turns from the cold end of the coil, depending on the type of mixer crystal used. Carefully position the output pickup link to the point of maximum signal while retuning the i-f coil each time an adjustment is made. Next, adjust the input probe for best *noise figure*, using whatever diode noise generator you may have. You will generally find this point lies in the direction of greater coupling from the position of maximum signal strength. When the input circuit has been adjusted for optimum noise figure, vary the crystal mixer current from 50 μA to the maximum available. Make comparative noise-figure measurements for every 20-μA increase in mixer current. You will probably find the best noise figure occurs between 200 and 1000 μA.

CHOOSING RF AMPLIFIER TRANSISTORS FOR VHF RECEIVERS

The almost infinite variety of transistor types now available for vhf and uhf amplifier service is sure to confuse the would-be builder of preamplifiers or converters for the bands above 50 MHz. Here are some hints, by bands, that may aid the reader in selecting the best transistors.

50 MHz: Any small-signal vhf amplifier transistor should give more than adequate gain and noise figure at this frequency, so the choice can be made on other grounds, such as overloading and cross-modulation qualities, availability and low price. The insulated-gate FET (MOSFET) is superior in the first category. Junction FETs for vhf use are nearly as good, and the circuit for them is somewhat simpler.

144 MHz: Gain and low noise figure come a bit

harder at this frequency, but low-cost mass-production vhf types are still satisfactory. FETs are still preferred, because of their better overload characteristics. Select types having low-noise ratings up to 200 MHz or more.

220 MHz: Paying a bit more money for low-noise uhf transistors may be worthwhile, for the best possible reception. Low-cost FETs still work well, however. Higher-priced uhf bipolar types, rated to 1000 MHz or so may give lower noise figure at 220 than production FETs, by 1 to 2 dB. Less overloading and cross-modulation may tip the scales in favor of FETs, though low-cross-mod bipolars are coming along.

420 MHz: At this writing, bipolars are still superior to FETs in the matter of noise figure, above 250 MHz or so. The best current FETs offter noise figures not much below 5 dB in this band, while bipolars offer as low as 2 dB, up to 500 MHz, depending on price. In a 2-stage amplifier, the best you can buy for the first stage, and a cheaper one for the second, may be a good bet.

CHAPTER 10

Mobile and Portable/Emergency Equipment and Practices

MOBILE AND PORTABLE EQUIPMENT

Amateur mobile and portable operation provides many opportunities for one to exercise his skill under less than ideal conditions. Additionally, the user of such equipment is available for public-service work when emergencies arise in his community – an important facet of amateur-radio operation. Operating skill must be better than that used at most fixed locations because the mobile/portable operator must utilize inferior antennas, and must work with low-power transmitters in many instances.

Most modern-day hf-band mobile work is done while using the ssb mode. Conversely, the fm mode is favored by mobile and portable vhf operators, though ssb is fully practical for vhf service. Some amateurs operate cw mobile, much to the consternation of local highway patrolmen, but cw operation from a *parked car* should not be overlooked during emergency operations.

High-power mobile operation has become practical on ssb because of the low duty cycle of voice operation, and because low-drain solid-state mobile power supplies lessen battery drain over that of dynamotors or vibrator packs. Most mobile a-m and fm operation is limited to 60 watts for reasons of battery drain.

Portable operation is popular on ssb, cw and fm while using battery-powered equipment. Ordinarily, the power of the transmitter is limited to less than five-watts dc input for practical reasons. Solid-state equipment is the choice of most modern amateurs because of its compactness, reliability, and low power consumption. High-power portable operation is practical and desirable when a gasoline-powered ac generator is employed.

The secret of successful operation from portable sites is much the same as that from a fixed station – a good antenna, properly installed. Power levels as low as 0.5 watt are sufficient for covering thousands of miles during hf-band ssb and cw operation. In the vhf and uhf region of operation it is common to work distances in excess of 100 miles – line of sight – with less than one watt of transmitter output power. Of course it is important to select a high, clear location for such operation on vhf, and it is beneficial to use an antenna with as much gain as is practical. Low-noise receiving equipment is the ever-constant companion of any low-power portable transmitter that provides successful long-distance communications. Careful matching of the portable or mobile antenna to obtain the lowest possible SWR is another secret of the successful operator.

All portable and mobile equipment should be assembled with more than ordinary care, assuring that maximum reliability under rough-and-tumble conditions will prevail. All solder joints should be made well, stranded hookup wire should be used for cabling (and in any part of the equipment subjected to stress). The cabinets for such gear should be rugged, and should be capable of protecting the components from dust, dirt, and moisture.

ELECTRICAL-NOISE ELIMINATION

One of the most significant deterrents to effective signal reception during mobile or portable operation is electrical impulse noise from the automotive ignition system. The problem also arises during the use of gasoline-powered portable ac generators. This form of interference can completely mask a weak signal, thus rendering the station ineffective. Most electrical noise can be eliminated by taking logical steps toward suppress-

Fig. 10-1 – Effective portable operation can be realized when using lofty locations for vhf or uhf. Here, W1CKK is shown operating a battery-powered, 150-mW output, 2-meter transceiver. With only a quarter wavelength antenna it is possible to communicate with stations 25 miles or more away. Low-power transistor equipment like this unit will operate many hours from a dry-cell battery pack.

Fig. 10-2 — High-power portable/emergency operation can be made possible on all amateur bands by using vacuum-tube transmitters, and powering them from a gasoline-operated ac generator of one or more kW rating. (Shown here are W4PEX, W4BFM, W4MVE, and WA4ZWU during a Field Day operation.)

ing it. The first step is to clean up the *noise source* itself, then utilize the receiver's built-in noise-reducing circuit as a last measure to knock down any noise pulses from passing cars, or from other man-made sources.

Spark-Plug Noise

Spark-plug noise is perhaps the worst offender when it comes to ignition noise. There are three methods of eliminating this type of interference – resistive spark-plug suppressors, resistor spark plugs, or resistance-wire cabling. By installing Autolite resistor plugs a great deal of the noise can be stopped. Tests have proved, however, that suppressor cable between the plugs and the distributor, and between the distributor and ignition coil, is the most effective means of curing the problem. Distributed-resistance cable has an approximate resistance of 5000 ohms per foot, and consists of a carbon-impregnated sheath followed by a layer of insulation, then an outer covering of protective plastic sheathing. Some cars come equipped with suppressor cable. Those which do not can be so equipped in just a matter of minutes. Automotive supply stores sell the cable, and it is not expensive. It is recommended that this wiring be used on all mobile units. The same type of cable can be installed on gasoline-powered generators for field use. A further step in eliminating plug noise is the addition of shielding over each spark-plug wire, and over the coil lead. It should be remembered that each ignition cable is an antenna by itself, thus radiating those impulses passing through it. By fitting each spark-plug and coil lead with the shield braid from a piece of RG-59/U coax line, grounding the braid at each end to the engine block, the noise reduction will be even greater. An additional step is to encase the distributor in flashing copper, grounding the copper to the engine block. This copper is quite soft and can be form-fit to the contour of the distributor. (Commercially-manufactured shielded ignition cable kits are also available.) The shield braid of the spark-plug wires should be soldered to the distributor shield if one is used. Also, the ignition coil should be enclosed in a metal shield since the top end of many of these coils is made of plastic. A small tin can can often be used as a top cover for the coil or distributor. It should be soldered to the existing metal housing of the coil. Additional reduction in spark-plug noise can be effected by making certain that the engine hood makes *positive* contact with the frame of the car when it is closed, thus offering an additional shield over the ignition system The engine block should also be bonded to the frame at several points. This can be done with the shield braid from coax cable. Feedthrough (hi-pass) capacitors should be mounted on the coil shield as shown in Fig. 10-6 to filter the two small leads leaving the assembly.

Other Electrical Noise

The automotive generator system can create an annoying type of interference which manifests itself as a "whine" when heard in the receiver. This noise results from the brushes sparking as the commutator passes over them. A dirty commutator is frequently the cause of excessive sparking, and can be cleaned up by polishing its surface with a fine grade of emery cloth. The commutator grooves should be cleaned out with a small, pointed instrument. A coaxial feedthrough capacitor of 0.1- to 0.5-μf capacitance should be mounted on the generator frame and used to filter the generator *armature* lead. In stubborn cases of generator noise a parallel L/C tuned trap can be used in place of the capacitor, or in addition to it, tuned to the receiver's operating frequency. This is probably the most effective measure used for curing generator noise.

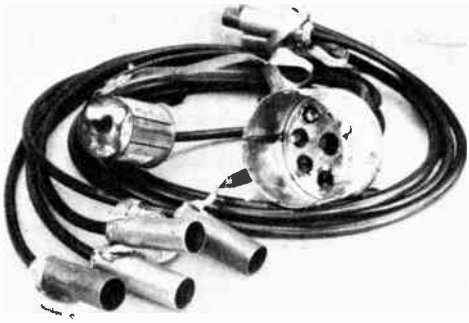

Fig. 10-3 — A typical homemade shielding kit for an automotive ignition system. Tin cans have been put to use as shields for the spark coil and distributor. Additional shields have been mounted on the plug ends of the wires for shilding the spark plugs. The shield braid of the cabling protrudes at each end of the wires and is grounded to the engine block.

Fig. 10-4 — A close-up view of the distributor shield can. The shield braid over each spark-plug wire is soldered to the top of the can, and the can is grounded to the engine block.

Voltage regulators are another cause of mobile interference. They contain relay contacts that jitter open and closed when the battery is fully charged. The noise shows up in the receiver as a ragged, "hashy" sound. Coaxial feedthrough capacitors can be mounted at the *battery* and *armature* terminals of the regulator box to filter those leads. The *field* terminal should have a small capacitor and resistor, series-connected, from it to chassis ground. The resistor prevents the regulator from commanding the generator to charge constantly in the event the bypass capacitor short-circuits. Such a condition would destroy the generator by causing overheating.

Alternators should be suppressed in a similar manner as dc generators. Their slip rings should be kept clean to minimize noise. Make sure the brushes are making good contact inside the unit. A coaxial feedthrough capacitor and/or tuned trap should be connected to the output terminal of the alternator. Make certain that the capacitor is rated to handle the output current in the line. The same rule applies to dc generators. *Do not connect a capacitor to the alternator or generator field terminals.* Capacitor values as high as 0.5 μF are suitable for alternator filtering.

Some alternator regulator boxes contain solid-state circuits, while others use single or double contact relays. The single-contact units require a coaxial capacitor at the *ignition* terminal. The double-contact variety should have a second such capacitor at the *battery* terminal. If noise still persists, try shielding the field wire between the regulator and the generator or alternator. Ground the shield at both ends.

Instrument Noise

Some automotive instruments are capable of creating noise. Among these gauges and senders are the heat- and fuel-level indicators. Ordinarily, the addition of a 0.5-μF coaxial capacitor at the sender element will cure the problem.

Other noise-gathering accessories are turn signals, window-opener motors, heating-fan motors and electric windshield-wiper motors. The installation of a 0.25-μF capacitor will usually eliminate their interference noise.

Frame and Body Bonding

Sections of the automobile frame and body that come in contact with one another can create additional noise. Suspected areas should be bonded together with flexible leads such as those made from the shield braid of RG-8/U coaxial cable. Trouble areas to be bonded are:

1 – Engine to frame.
2 – Air cleaner to engine block.
3 – Exhaust lines to car fame and engine block.
4 – Battery ground terminal to frame.
5 – Steering column to frame.
6 – Hood to car body.
7 – Front and rear bumpers to frame.
8 – Tail pipe to frame.
9 – Trunk lid to frame.

Wheel and Tire Static

Wheel noise produces a ragged sounding pulse in the mobile receiver. This condition can be cured by installing static-collector springs between the spindle bolt of the wheel and the grease-retainer cap. Insert springs of this kind are available at automotive supply stores.

Tire static has a ragged sound too, and can be detected when driving on hard-surface highways. If the noise does not appear when driving on dirt roads it will be a sure indication that tire static exists. This problem can be resolved by putting

Fig. 10-5 — Gasoline-powered ac generators used for portable/emergency operation should be treated for ignition noise in the same manner as automobile engines are. The frame of the gas generator should be connected to an earth ground, and the entire unit should be situated as far from the operating position as possible. This will not only reduce ignition noise, but will minimize ambient noise from the power unit. (Shown here are WA6LXX, WA6HUB and W6PQH during portable operations.)

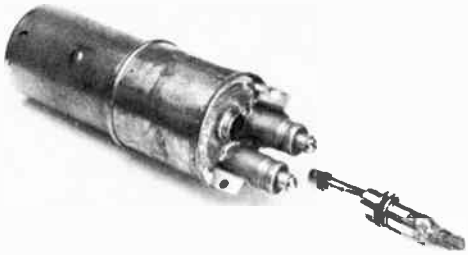

Fig. 10-6 — The automobile ignition coil should be shielded as shown here. A small tin can has been soldered to the metal coil case, and coaxial feed through capacitors have been soldered to the top of the can. The "hot" lead of the coil enters the shield can through a modified audio connector.

antistatic powder inside each tire. This substance is available at auto stores, and comes supplied with an injector tool and instructions.

Corona-Discharge Noise

Some mobile antennas are prone to corona build-up and discharge. Whip antennas which come to a sharp point will sometimes create this kind of noise. This is why most mobile whips have steel or plastic balls at their tips. But, regardless of the structure of the mobile antenna, corona build-up will frequently occur during or just before a severe electrical storm. The symptoms are a high-pitched "screaming" noise in the mobile receiver, which comes in cycles of one or two minutes duration, then changes pitch and dies down as it discharges through the front end of the receiver. The condition will repeat itself as soon as the antenna system charges up again. There is no cure for this condition, but it is described here to show that it is not of origin within the electrical system of the automobile.

Electronic Noise Limiters

Many commercially built mobile transceivers have some type of built-in noise clipping or cancelling circuit. Those which do not can be modified to include such a circuit. The operator has a choice of using af or rf limiting. Circuits of this type are described in the theory section of the hf receiving chapter.

Simple superregenerative receivers, by nature of their operation, provide noise-limiting features, and no additional circuit is needed. Fm receivers, if operating properly, do not respond to noise pulses of normal amplitude; hence no additional circuitry is required.

THE MOBILE ANTENNA

The antenna is perhaps the most important item in the successful operation of the mobile installation. Mobile antennas, whether designed for single or multiband use, should be securely mounted to the automobile, as far from the engine compartment as possible (for reducing noise pickup), and should be carefully matched to the coaxial feed line which connects them to the transmitter and receiver. All antenna connections should be tight and weatherproof. Mobile loading coils should be protected from dirt, rain, and snow if they are to maintain their Q and resonant frequency. The greater the Q of the loading coil, the better the efficiency, but the narrower will be the bandwidth of the antenna system.

Though bumper-mounted mobile antennas are favored by some, it is better to place the antenna mount on the rear deck of the vehicle, near the rear window. This locates the antenna high and in the clear, assuring less detuning of the system when the antenna moves to and from the car body. *Never use a base-loaded antenna on a bumper mount* if an efficient system is desired. Many operators avoid cutting holes in the car body for fear of devaluation when selling the automobile. Such holes are easily filled, and few car dealers, if any, lower the trade-in price because of the holes.

The choice of base or center loading a mobile antenna has been a matter of controversy for many years. In theory, the center-loaded whip presents a slightly higher base impedance than does the base-loaded antenna. However, with proper impedance-matching techniques employed there is no discernible difference in performance between the two methods. A base-loading coil requires fewer turns of wire than one for center loading, and this is an electrical advantage because of reduced coil

Fig. 10-7 — Here a mobile station is used as a portable/emergency station. As such, it can be connected to a full-size stationary antenna for maximum effectiveness. The engine should be noise-suppressed, and should be kept running during operation of the station to assure full battery power. (WA3EQK operating.)

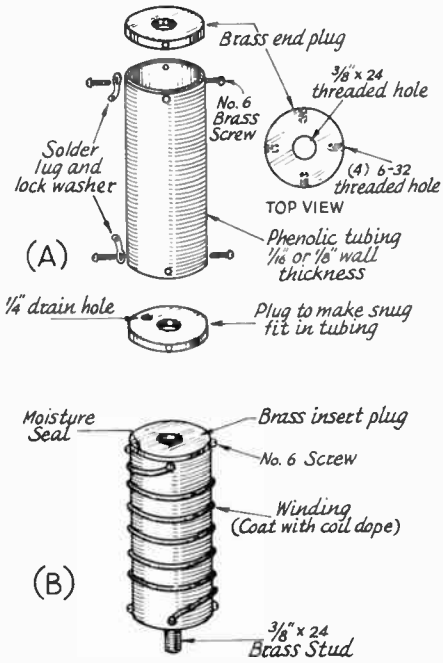

Fig. 10-8 — Details for making a home-built mobile loading coil. A breakdown view of the assembly is given at A. Brass end plugs are snug-fit into the ends of the phenolic tubing, and each is held in place by four 6-32 brass screws. Center holes in the plugs are drilled and tapped for 3/8-24 thread. The tubing can be any diameter from one to four inches. The larger diameters are recommended. Illustration B shows the completed coil. Resonance can be obtained by installing the coil, applying transmitter power, then pruning the turns until the lowest SWR is obtained. Pruning the coil for maximum field-strength-meter indication will also serve as a resonance indication. The chart in Fig. 10-10 will serve as a guide in determining the number of turns required for a given frequency of operation.

losses. A base-loaded antenna is more stable from the standpoint of wind loading and sway. If a homemade antenna system is contemplated, either system will provide good results, but the base-loaded antenna may be preferred for its mechanical advantages.

Loading Coils

There are many commercially built antenna systems available for mobile operation, and some manufacturers sell the coils as separate units. Air-wound coils of large wire diameter are excellent for use as loading inductors. Large Miniductor coils can be installed on a solid phenolic rod and used as loading coils. Miniductors, because of their turns spacing, are easy to adjust when resonating the mobile antenna, and provide excellent circuit *Q*. Phenolic-impregnated paper or fabric tubing of large diameter is suitable for making homemade loading coils. It should be coated with liquid fiber glass, inside and out, to make it weather proof. Brass insert plugs can be installed in each end, their centers drilled and tapped for a 3/8 X 24 thread to accommodate the mobile antenna sections. After the coil winding is pruned to resonance it should be coated with a high-quality, low-loss compound to hold the turns securely in place, and to protect the coil from the weather. Liquid polystyrene is excellent for this. It can be made by dissolving chips of solid polystyrene in carbon-tetrachloride. *Caution*: Do not breathe the chemical fumes, and do not allow the liquid to come in contact with the skin. *Carbon tetrachloride is hazardous to health.* Dissolve sufficient polystyrene material in the liquid to make the remaining product the consistency of Q-dope or pancake syrup. Details for making a home-built loading coil are given in Fig. 10-8.

Impedance Matching

Fig. 10-9 illustrates the shunt-feed method of obtaining a match between the antenna and the coaxial feed line. For operation on 75 meters with a center-loaded whip, L2 will have approximately 18 turns of No. 14 wire, spaced one wire thickness between turns, and wound on a 1-inch diameter form. Initially, the tap will be approximately 5 turns above the ground end of L2. Coil L2 can be inside the car body, at the base of the antenna, or it can be located at the base of the whip, outside the car body. The latter method is preferred. Since L2 helps determine the resonance of the overall antenna, L1 should be tuned to resonance in the desired part of the band with L2 in the circuit. The

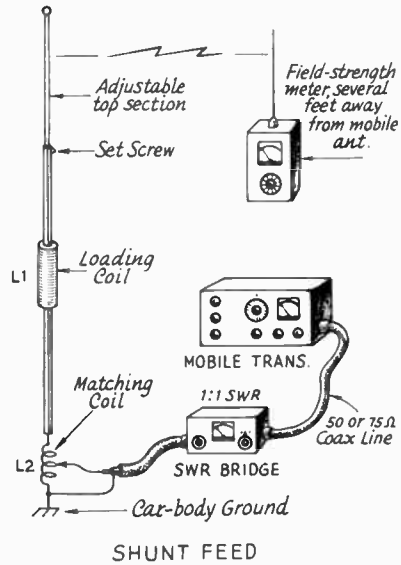

Fig. 10-9 — A mobile antenna using shunt-feed matching. Overall antenna resonance is determined by the combination of L1 and L2. Antenna resonance is set by pruning the turns of L1, or adjusting the top section of the whip, while observing the field-strength meter or SWR indicator. Then, adjust the tap on L2 for lowest SWR.

Approximate Values for 8-foot Mobile Whip

f kHz	Loading L μH	R_C(Q50) Ohms	R_C(Q300) Ohms	R_R Ohms	Feed R* Ohms	Matching L μH*
Base Loading						
1800	345	77	13	0.1	23	3
3800	77	37	6.1	0.35	16	1.2
7200	20	18	3	1.35	15	0.6
14,200	4.5	7.7	1.3	5.7	12	0.28
21,250	1.25	3.4	0.5	14.8	16	0.28
29,000	-------	----	---	--	36	0.23
Center Loading						
1800	700	158	23	0.2	34	3.7
3800	150	72	12	0.8	22	1.4
7200	40	36	6	3	19	0.7
14,200	8.6	15	2.5	11	19	0.35
21,250	2.5	6.6	1.1	27	29	0.29

R_C = Loading-coil resistance; R_R = Radiation resistance.
* Assuming loading coil Q = 300, and including estimated ground-loss resistance.
Suggested coil dimensions for the required loading inductance are shown in a following table.

Fig. 10-10 — Chart showing inductance values used as a starting point for winding homemade loading coils. Values are based on an approximate base-loaded whip capacitance of 25 pF, and a capacitance of 12 pF for center-loaded whips. Large-diameter wire and coils, plus low-loss coil forms, are recommended for best Q.

TABLE 10-I

Suggested Loading-Coil Dimensions

Req'd L μH	Turns	Wire Size	Dia In.	Length In.
700	190	22	3	10
345	135	18	3	10
150	100	16	2 1/2	10
77	75	14	2 1/2	10
77	29	12	5	4 1/4
40	28	16	2 1/2	2
40	34	12	2 1/2	4 1/4
20	17	16	2 1/2	1 1/4
20	22	12	2 1/2	2 3/4
8.6	16	14	2	2
8.6	15	12	2 1/2	3
4.5	10	14	2	1 1/4
4.5	12	12	2 1/2	4
2.5	8	12	2	2
2.5	8	6	2 3/8	4 1/2
1.25	6	12	1 3/4	2
1.25	6	6	2 3/8	4 1/2

adjustable top section of the whip can be telescoped until a maximum reading is noted on the field-strength meter. The tap is then adjusted on L2 for the lowest reflected-power reading on the SWR bridge. Repeat these two adjustments until no further increase in field strength can be obtained; this point should coincide with the lowest SWR. The number of turns needed for L2 will have to be determined experimentally for 40- and 20-meter operation. There will be proportionately fewer turns required.

MATCHING WITH AN *L* NETWORK

Any mobile antenna that has a feed-point impedance less than the characteristic impedance of the transmission line can be matched to the line by means of a simple L network, as shown in Fig. 10-11. The network is composed of C_M and L_M. The required values of C_M and L_M may be determined from the following:

$$C_M = \frac{\gamma\ R_A\,(R_0 - R_A) \times 10^9}{2\pi f\,\text{kHz}\ R_A\,R_0}\ \text{pF and}$$

$$L_M = \frac{\gamma\ R_A\,(R_0 - R_A) \times 10^3}{2\pi f\,\text{kHz}}\ \mu\text{H}$$

where R_A is the antenna feed-point impedance and R_0 is the characteristic impedance of the transmission line.

As an example, if the antenna impedance is 20 ohms and the line is 50-ohm coaxial cable, then at 4000 kHz,

$$C_M = \frac{\gamma\ 20\,(50 - 20) \times 10^9}{(6.28)\,(4000)\,(20)\,(50)}$$

$$= \frac{\gamma\ 600 \times 10^4}{(6.28)\,(4)\,(2)\,(5)}$$

$$= \frac{24.1}{251.2} \times 10^4 = 974 \text{ pF}$$

$$L_M = \frac{\gamma\ 20\,(50 - 20) \times 10^3}{(6.28)\,(4000)}$$

$$= \frac{\gamma\ 600}{25.12} = \frac{24.5}{25.12} = 0.97\ \mu\text{H}$$

The chart of Fig. 10-12 shows the capacitive reactance of C_M, and the inductive reactance of L_M necessary to match various antenna impedances to 50-ohm coaxial cable.

In practice, L_M need not be a separate inductor. Its effect can be duplicated by adding an equivalent amount of inductance to the loading coil, regardless of whether the loading coil is at the base or at the center of the antenna.

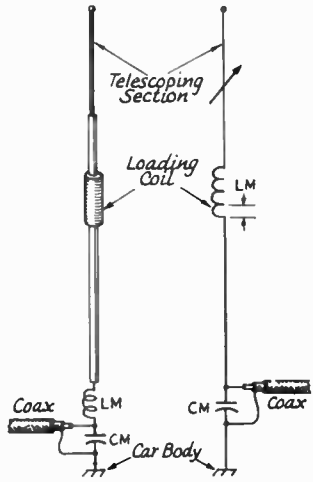

Fig. 10-11 — A whip antenna may also be matched to coax line by means of an L network. The inductive reactance of the L network can be combined in the loading coil, as indicated at the right.

Adjustment

In adjusting this system, at least part of C_M should be variable, the balance being made up of combinations of fixed mica capacitors in parallel as needed.

A small one-turn loop should be connected between C_M and the chassis of the car, and the loading coil should then be adjusted for resonance at the desired frequency as indicated by a GDO coupled to the loop at the base. Then the transmission line should be connected, and a check made with an SWR bridge connected at the transmitter end of the line.

With the line disconnected from the antenna again, C_M should be readjusted and the antenna returned to resonance by readjustment of the loading coil. The line should be connected again, and another check made with the SWR bridge. If the SWR is less than it was on the first trial, C_M should be readjusted in the same direction until the point of minimum SWR is found. Then the coupling between the line and the transmitter can be adjusted for proper loading. It will be noticed from Fig. 10-12 that the inductive reactance varies only slightly over the range of antenna resistances likely to be encountered in mobile work. Therefore, most of the necessary adjustment is in the capacitor.

The one-turn loop at the base should be removed at the conclusion of the adjustment and slight compensation made at the loading coil to maintain resonance.

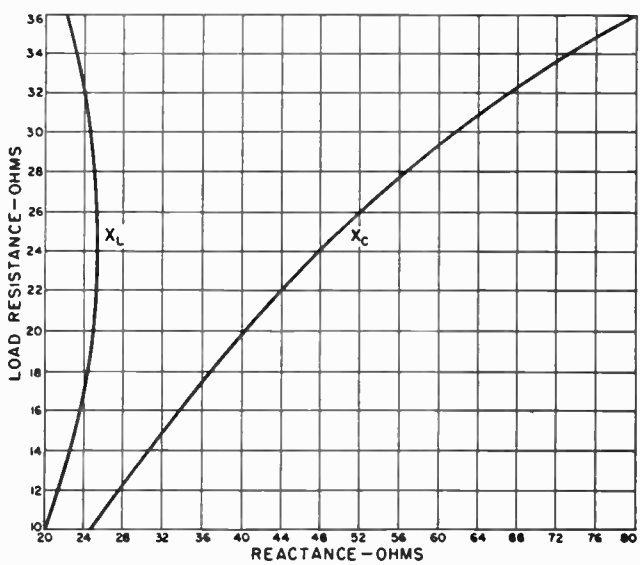

Fig. 10-12 — Curves showing inductive and capacitive reactances required to match a 50-ohm coax line to a variety of antenna resistances.

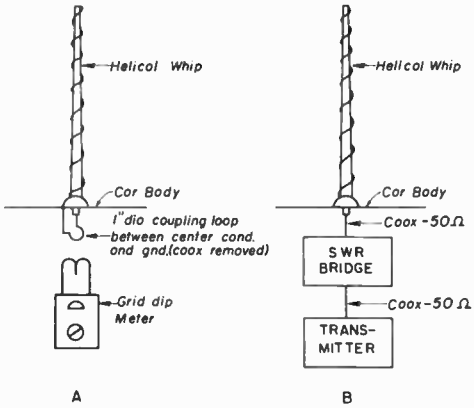

Fig. 10-13 — The resonant frequency of the antenna can be checked (A) with a grid-dip meter or (B) by finding the frequency at which minimum feed-line SWR occurs. The latter method is more accurate at high frequencies because it eliminates the effect of the coupling loop required in A.

CONTINUOUSLY-LOADED HELICAL WHIPS

A continuously-loaded whip antenna of the type shown in Fig. 10-14 is thought to be more efficient than a center- or base-loaded system (*QST*, May 1958, W9KNK). The feed-point impedance of the helically-wound whip is somewhat greater than the previously described mobile antennas, and is on the order of 20 ohms, thus providing an SWR of only 2.5 when 50-ohm coaxial feed line is used. The voltage and current distribution is more uniform than that of lumped-constant antennas. The low SWR and this feature make the antenna more efficient than the center- or base-loaded types. Antennas of this variety can be wound on a fiber glass fishing rod, then weatherproofed by coating them with liquid fiber glass, or by encapsulating them with shrinkable vinyl-plastic tubing.

Tapered Pitch

On frequencies below 28 MHz the radiation resistance falls off so rapidly that for the desired 4- and 6-foot whip lengths the resistance values are not suitable for direct operation with 50-ohm lines. It is desirable to raise the feed-point *R* to a value, approaching 50 ohms so that a matched line condition will exist. Based on extensive experimentation, a *tapered*-pitch continuous-loading antenna is recommended. Since it is not feasible to wind the helix with continuously varying pitch, a "step-tapered" design is best. A typical step-tapering technique for a variable-pitch helical whip antenna is to divide the total length of the radiator, say 4 feet, into 6 equal parts of 8 inches each. The helix is then wound with a 2-inch pitch for the first 8 inches, pitches of 1, 1/2, 1/4 and 1/8 inch, respectively, for the next four 8-inch sections, and finished with close winding of the final section. The resonant frequency will depend upon the rod diameter, wire size and number of turns. However, the variable-pitch 6-step taper approaches the ideal continuously-variable condition closely enough to give a good 50-ohm match with a 4-foot antenna at frequencies between 20 and 30 MHz.

Adjustment

With this design it is difficult to adjust the resonant frequency by changing the turns near the base; however, the frequency may be adjusted very readily by cutting off sections of the tightly-wound portion near the top of the whip. The technique to follow is to design for a frequency slightly lower than desired and then to bring the unit in on frequency by cutting small sections off the top until it resonates at the desired frequency. Resonance can be checked either by the use of a grid-dip meter or by the use of a transmitter and SWR bridge. Reflected power as low as 2 to 5 percent can easily be obtained with the units properly resonated even though it may mean cutting an inch or two off the top closely wound section to bring the unit in on frequency. These values can be obtained in the 10- and 15-meter band with overall lengths of 4 feet and in the 20- and 40-meter bands with a length of 6 feet. In the 75-meter band it has been possible to obtain an SWR of 1.5 using a 6-foot tapered-pitch helical winding, although the bandwidth is restricted to about 60 kHz. This affords operation comparable to the center coil loaded 12-foot whips. In general, the longer the radiator (in wavelengths), the greater the bandwidth. By arbitrarily restricting the physical length to 6 feet, or less, we obtain the following results:

Band	*Length*	*Resonant Freq.*	*SWR*	*Bandwidth for SWR = 2.0*
10 meters	4 feet	29.00 MHz	1.3	800 kHz
15 meters	4 feet	21.30 MHz	1.4	500 kHz
20 meters	6 feet	14.25 MHz	1.3	250 kHz
40 meters	6 feet	7.25 MHz	1.5	100 kHz
75 meters	6 feet	3.90 MHz	1.5	60 kHz

In the 15-, 20- and 40-meter bands the bandwidths of the taper-pitch designs are good enough to cover the entire phone portions of the bands. The bandwidths have been arbitrarily

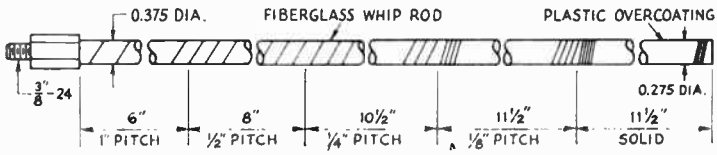

Fig. 10-14 — Dimensions for a 15-meter stepped-pitch whip, wound with No. 20 enameled wire.

Fig. 10-15 — K1MET prunes a capacity hat for antenna resonance at the low end of the 160-meter band. The Webster Big-K antenna is first tuned for the high segment of the band. The capacity hat is clipped on when operation on the "low end" is desired. Fine adjustments can be made by increasing or decreasing the spacing between the two No. 10 wires.

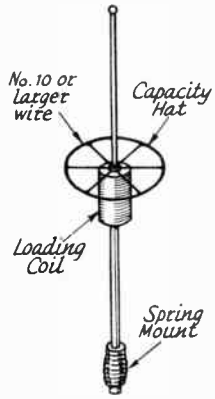

Fig. 10-16 — A capacitance "hat" can be used to improve the performance of base- or center-loaded whips. A solid metal disk can be used in place of the skeleton disk shown here.

selected as that frequency spread at which the SWR becomes 2 on a 50-ohm line, although with most equipment SWR values up to 2.5 can be tolerated and loading accomplished with ease.

Top-Loading Capacitance

Because the coil resistance varies with the inductance of the loading coil, the resistance can be reduced, beneficially, by reducing the number of turns on the coil. This can be done by adding capacitance to that portion of the mobile antenna that is *above* the loading coil. To achieve resonance, the inductance of the coil is reduced proportionally. Capacity "hats," as they are often called, can consist of a single stiff wire, two wires or more, or a disk made up from several wires, like the spokes of a wheel. A solid metal disk can also be used. The larger the capacity hat, in terms of mass, the greater the capacitance. The greater the capacitance, the smaller the amount of inductance needed in the loading coil for a given resonant frequency.

There are two schools of thought concerning the attributes of center-loading and base-loading. It has not been established that one system is superior to the other, especially in the lower part of the hf spectrum. For this reason both the base- and center-loading schemes are popular. Capacity-hat loading is applicable to either system. Since more inductance is required for center-loaded whips to make them resonant at a given frequency, capacity hats should be particularly useful in improving their efficiency.

REMOTE ANTENNA RESONATING

Fig. 10-17 shows circuits of two remote-control resonating systems for mobile antennas. As shown, they make use of surplus dc motors driving a loading coil removed from a surplus ARC-5 transmitter. A standard coil and motor may be used in either installation at increased expense.

The control circuit shown in Fig. 10-17A is a three-wire system (the car frame is the fourth conductor) with a double-pole double-throw switch and a momentary (normally off) single-pole single-throw switch. S2 is the motor reversing switch. The motor runs so long as S1 is closed.

The circuit shown in Fig. 10-17B uses a latching relay, in conjunction with microswitches, to reverse automatically the motor when the roller reaches the end of the coil. S3 and S5 operate the relay, K1, which reverses the motor. S4 is the

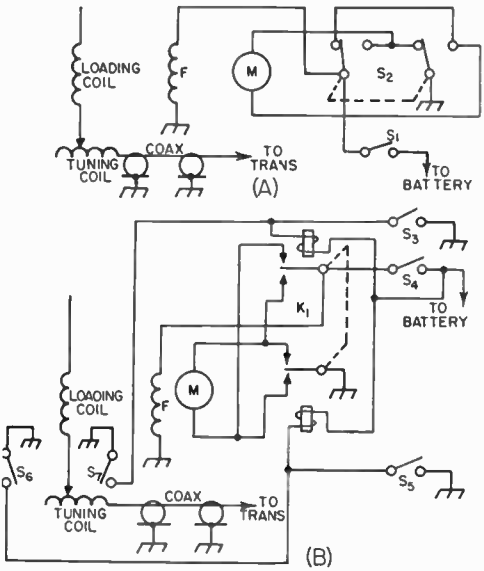

Fig. 10-17 — Circuit of the remote mobile-whip tuning systems.
K1 — Dpdt latching relay.
S1, S3, S4, S5 — Momentary-contact spst, normally open.
S2 — Dpdt toggle.
S6, S7 — Spst momentary-contact microswitch, normally open.

motor on-off switch. When the tuning coil roller reaches one end or the other of the coil, it closes S6 or S7, as the case may be, operating the relay and reversing the motor.

The procedure in setting up the system is to prune the center-loading coil to resonate the antenna on the highest frequency used without the base-loading coil. Then, the base-loading coil is used to resonate at the lower frequencies. When the circuit shown in Fig. 10-17A is used for control, S1 is used to start and stop the motor, and S2, set at the "up" or "down" position, will determine whether the resonant frequency is raised or lowered. In the circuit shown in Fig. 10-17B, S4 is used to control the motor. S3 or S5 is momentarily closed (to activate the latching relay) for raising or lowering the resonant frequency. The broadcast antenna is used with a wavemeter to indicate resonance. (Originally described in *QST*, December 1953.)

VHF MOBILE ANTENNAS

The three most popular vhf mobile antennas are the so-called halo, the turnstile, and the 1/4-wavelength vertical. The same rules apply to the installation and use of these antennas as for antennas operated in the hf bands – mounted as high and in the clear as possible, and with good electrical connections throughout the system.

The polarization chosen – vertical or horizontal – will depend upon the application and the area of the USA where operation will take place. It is best to use whatever polarity is in vogue for your region, thus making the mobile signal compatible with those of other mobiles or fixed stations. Vertically-polarized mobile antennas are more subject to pattern disturbance than horizontal types. That is to say, considerably more flutter will be inherent on the signal than with horizontal antennas. This is because such objects as trees and power poles, because of their vertical profile, tend to present a greater path obstacle to the vertical antenna. It is becoming common practice, however, to use omnidirectional, vertically-polarized vhf mobile antennas in connection with fm/repeater mobile service, even in areas where horizontal antennas are favored.

Both the turnstile and halo antennas are horizontally polarized. The halo is physically small,

Fig. 10-18 – The Big Wheel, an omnidirectional horizontal antenna for the 144-MHz band designed by W1FVY and W1IJD. Radiating elements occupy an area approximately 40 inches in diameter.

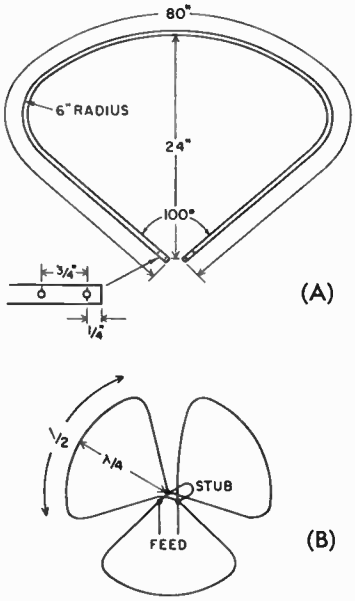

Fig. 10-19 – Schematic representation of the Big Wheel at B. Three one-wavelength elements are connected in parallel. The resulting low feed impedance is raised to 52 ohms with an inductive stub. Illustration A shows the bend details of one element for 144-MHz use.

but is less effective than a turnstile. It is a half-wavelength dipole bent into a circle, and because the ends are in close proximity to one another, some signal cancellation occurs. This renders the antenna less efficient than a straight center-fed dipole. Halos do not offer a perfectly circular radiation pattern, though this has been a popular belief. Tests indicate that there is definite directivity, though broad, when a halo is rotated 360 degrees over a uniform plane surface.

Turnstile antennas of the type shown in Fig. 10-20 more closely approach the desired circular pattern of radiation, though the pattern is somewhat like a poorly defined four-leaf clover. Here two dipoles are fed with a 90-degree phase difference, and the antenna has a gain equal to, or better than a straight dipole. Of the three types discussed in the foregoing text, the latter is recommended.

Fig. 10-20 — Two-meter turnstile antenna shown mounted on the front of an automobile. The miniature coax cable which feeds the antenna is taped to its 1/4-inch diameter steel supporting rod. The ends of the antenna elements should be flattened, or rounded, to make them safer in the event of accidental contact with the human body.

If one does not object to having an antenna that is likely to become a conversation piece because of its size and shape, it would be well to consider using the "Big Wheel" antenna, designed by W1FVY and W1IJD (September and October *QST*, 1961, and *ARRL Radio Amateur's VHF Manual*). The "wheel" consists of three one-wavelength elements, Fig. 10-19, connected in parallel and arranged as a cloverleaf. The antenna has a low feed-point impedance which is raised to 50 ohms by means of an inductive stub. Each clover leaf is 80 inches long overall (144 MHz), and can be made from aluminum tubing. Though the radiation pattern is not perfectly circular, it offers a good approach to that goal. Its performance greatly surpasses that of the three previously described antennas. It showed an increase in signal strength, from a selected test site, of several dB over the vertical whip, the halo, and the turnstile. Polarization is horizontal, as was the fixed-station antenna used in the tests.

TWO-METER TURNSTILE

An effective omnidirectional 2-meter mobile or fixed-station antenna is the turnstile, Fig. 10-20. This horizontally-polarized antenna provides somewhat better performance than does the "halo" antenna. It is decidedly better than a simple 1/4-wave whip.

Two half-wave dipoles are crossed and fed 90 degrees out of phase by equal amounts of power. A *quarter*-wavelength stub assures the proper phase relationship of the second dipole. A quarter-wave-

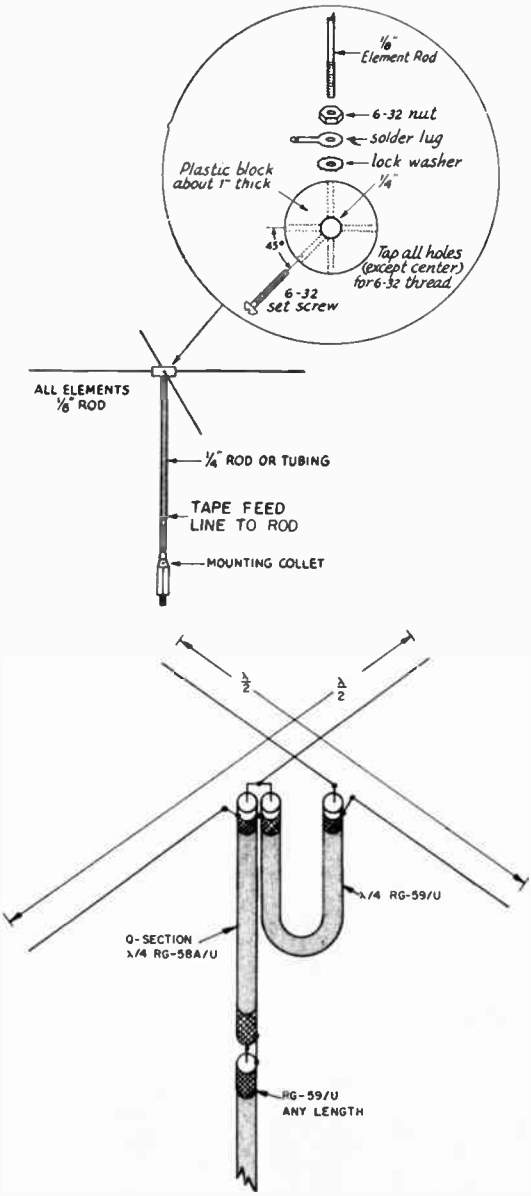

Fig. 10-21 — Schematic drawing of the turnstile antenna. Crossed dipoles are fed 90 degrees out of phase through a quarter-wave section of coax line. The quarter-wavelength *Q*-section matches the antenna's 36-ohm feed impedance to that of the 75-ohm feed line.

length *Q*-section, made from 50-ohm line, is used to match the 36-ohm antenna feed-point impedance to the 75-ohm transmission line. The *Q*-section can be omitted if a slight mismatch (less than 2:1) is tolerable. If this is done, the transmission line to the rig should be replaced by 50-ohm cable. The antenna pattern is nearly circular.

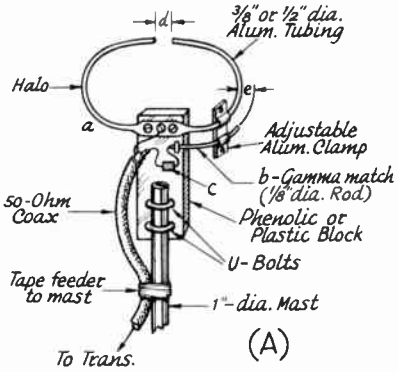

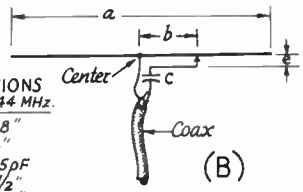

TYPICAL DIMENSIONS

	50 MHz.	144 MHz.
a =	105 1/2"	38"
b =	18"	6"
c =	50pF	25pF
d =	3 1/2"	1 1/2"
e =	2 1/2"	1 3/4"

Fig. 10-22 — Details for building a halo antenna for 6- or 2-meter use are shown at A. Other mechanical methods are possible, and the construction technique used will be up to the builder. The open end of the coax cable should be sealed against the weather. At B, a schematic representation of the halo. Dimension *a* is set for 1/2 wavelength at the operating frequency. The chart gives approximate dimensions in inches, and will serve as a guide in building a halo.

Mechanical details for the antenna are given in Fig. 10-21. The center insulator block can be made from a piece of Plexiglas, polystyrene, or similar substance of high dielectric quality. Phenolic material is the most rugged and is less likely to shatter in cold weather. The elements can be fashioned from 1/8-inch diameter aluminum rods, but brass is more durable and is better able to withstand stress. Brass brazing rod is available from most automotive parts houses, or from welding shops, and is excellent material for turnstile elements. No. 10 copperweld wire also works well and is virtually indestructible.

The antenna is tuned by inserting an SWR bridge in the feed line, applying transmitter power, and adjusting the movable clamp on the gamma rod for lowest reflected-power reading. If a variable capacitor is used at *c*, its setting should be varied along with that of the gamma clamp for lowest SWR. The spacing at *d* can serve as a fine adjustment. Halos can be stacked 1/2 wavelength apart on the same mast – fed in phase – for 3 dB gain.

THE QUARTER-WAVELENGTH VERTICAL

Ideally, the vhf vertical antenna should be installed over a perfectly flat plane reflector to assure uniform omnidirectional radiation. This suggest that the center of the automobile roof is the best place to mount it. Alternatively, the flat portion of the auto's rear trunk deck can be used, but will result in a directional pattern because of car-body obstruction. Fig. 10-23 illustrates at A and B how a Millen high-voltage connector can be used as a roof mount for a 144-MHz whip. The hole in the roof can be made over the dome light, thus providing accessability through the upholstery. RG-59/U and matching section *L*, Fig. 10-23C, can be routed between the car roof and the ceiling upholstery and brought into the trunk compartment, or down to the dashboard of the car. Some operators install an SO-239-type coax connector on the roof for mounting the whip. The method is similar to that of drawing A.

VHF HALO ANTENNAS

The antenna of Fig. 10-22 can be built from aluminum tubing of medium tensile strength. The one-half-wavelength dipole is bent into a circle and fed with a gamma match. Capacitor *c* is shown as a fixed value, but a variable capacitor mounted in a weatherproof box will afford more precise

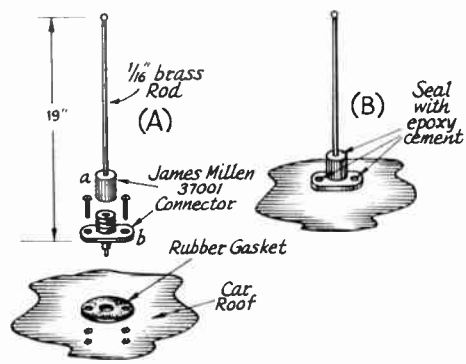

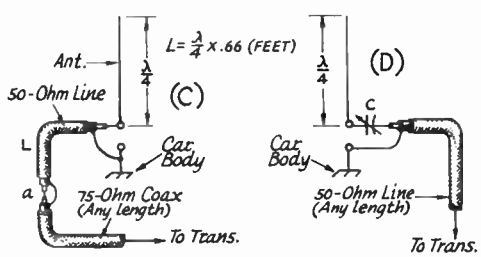

Fig. 10-23 — At A and B, an illustration of how a quarter-wavelength vertical antenna can be mounted on a car roof. The whip section should be soldered into the cap portion of the Millen connector, then screwed to the base socket. This handy arrangement permits removing the antenna when desired. Epoxy cement should be used at the two mounting screws to prevent moisture from entering the car. Diagrams C and D are discussed in the text.

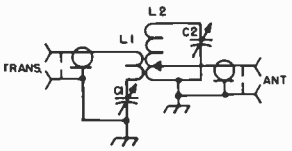

	50 MHz	144 MHz
C1	100 pF	35 pF
C2	25 pF	15 pF
L1	2 Ts NO.16 ENAM., 2-1/2" DIA.	2 Ts NO.16 ENAM., 1-1/2" DIA.
L2	5 Ts NO.10 1-1/2" DIA.	4 Ts NO. 10 1" DIA.

Fig. 10-24 – Schematic diagram of the 6- or 2-meter antenna-matching circuit for use at the base of the quarter-wavelength vertical antenna. It can be housed in a Minibox and mounted permanently at the antenna base, inside or outside the car. If used outside, it should be sealed against dirt and moisture.

adjustment of the SWR. Or, a variable capacitor can be used initially for obtaining a 1:1 match, then its value can be measured at that setting to determine the required value for fixed capacitor *c*. Fixed-value capacitor *c* should be a dipped silver mica. A 75-pF variable should be used for 6-meter antennas, and a 35-pF variable will suffice for 144 MHz.

The tubing of *a* can be flattened to provide a suitable mounting surface for attachment to the insulating block of Fig. 10-22A. Gamma rod *b* can be secured to the same block by flattening its end and bolting it in place with 4-40 brass hardware. The spacing at *d* can be varied during final adjustment to secure the lowest SWR. Better physical stability will result if a high-dielectric insulator is connected across area *d*. Steatite material is recommended if an insulator/stabilizer is used.

If 75-ohm transmission line is used for the vertical, a quarter-wavelength matching transformer, L, can be used to match the feed impedance of the whip – approximately 30 ohms – to that of the feed line. A section of 50-ohm coax inserted as shown provides a close match to the antenna. Coax fittings can be used at junction *a* to assure a flat line, and to provide mechanical flexibility. BNC connectors are ideal for use with small coax lines. Illustration D shows how a series capacitor can be used to tune the reactance out of the antenna when using 50-ohm feed line. For 144-MHz use it should be 35 pF. A 75-pF variable will suffice for 6-meter antennas. An SWR bridge should be connected in the line while *c* is tuned for minimum reflected-power indication.

A more precise method of matching the line to the antenna is shown in Fig. 10-24. This antenna coupler can match 50- or 75-ohm lines to any antenna impedance from 20 ohms to several hundred ohms. It should be installed *at* the base of the vertical, and with an SWR bridge in the line C1 and C2 should be adjusted for the lowest SWR possible. The tap near the ground end of L2 should then be adjusted for the lowest SWR, readjusting C1 and C2 for minimum reflected power each time the tap is moved. A very compact tuner can be built by scaling down the coil dimensions appropriately. Trimmer capacitors can be used for C1 and C2 if power levels of less than 50 watts are used.

MOBILE POWER SUPPLIES

Most modern-day mobile installations utilize commercially-built equipment. This usually takes the form of a transceiver for ssb on the hf bands, and ssb or a-m for vhf operation. For fm operation in the vhf bands, most transceivers are surplus units which were originally used by commercial land-mobile services. Some home-built equipment is still being used, and it is highly recommended that one consider building his own mobile installation for the technical experience and satisfaction such a project can afford.

Many mobile transceivers contain their own power supplies for 6- and 12-volt dc operation. Some internal power supplies will also work off the 117-V mains. Vibrator power supplies are quite popular for low and medium power levels, but solid-state supplies are more reliable and efficient. Dynamotors are still used by some operators, but are bulky, noisy, and inefficient. The latter imposes an extremely heavy drain on the car battery, and does not contribute to long-term mobile or emergency operation without having the engine running at fairly high rpm to maintain the charge level of the battery.

Dynamotors

A dynamotor differs from a motor generator in that it is a single unit having a double armature winding. One winding serves for the driving motor, while the output voltage is taken from the other. Dynamotors usually are operated from 6-, 12-, 28- or 32-volt storage batteries and deliver from 300 to 1000 volts or more at various current ratings.

Commutator noise is a common cause of poor reception when dynamotors are used. It can usually be cured by installing .002-μF mica bypass capacitors from the dynamotor brushes (high-voltage end of armature) to the frame of the unit, preferably inside the cover. The high-voltage output lead from the dynamotor should be filtered by placing a .01-μF capacitor in shunt with the line (a 1000-V disk), followed by a 2.5-mH rf choke (in series with the line) of adequate current rating for the transmitter or receiver being powered by the dynamotor. This network should be followed by a smoothing filter consisting of two 8-μF electrolytic capacitors and a 15- or 30-H choke having a low dc resistance. The commutator and its grooves, at both ends of the armature, should be kept clean to further minimize noise. Heavy, direct leads should be used for connecting the dynamotor to the storage battery.

Vibrator Power Supplies

The vibrator type of power supply consists of a special step-up transformer combined with a

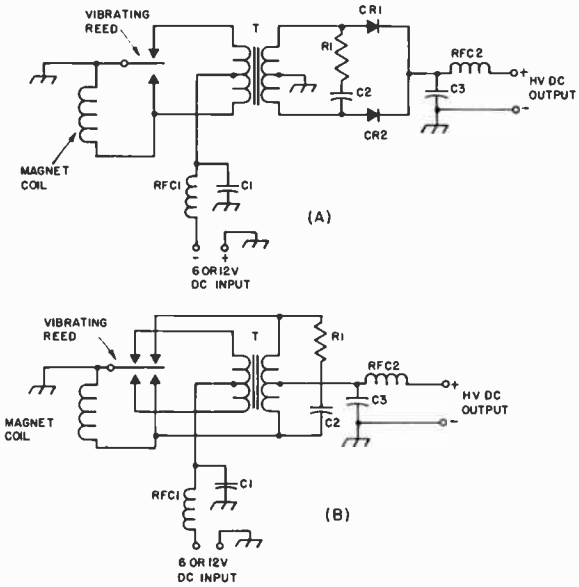

Fig. 10-25 — Basic types of vibrator power supplies. A — Nonsynchronous. B — Synchronous.

vibrating interrupter (vibrator). When the unit is connected to a storage battery, plate power is obtained by passing current from the battery through the primary of the transformer. The circuit is made and reversed rapidly by the vibrator contacts, interrupting the current at regular intervals to give a changing magnetic field which induces a voltage in the secondary. The resulting square-wave dc pulses in the primary of the transformer cause an alternating voltage to be developed in the secondary. This high-voltage ac in turn is rectified, either by silicon diode rectifiers or by an additional synchronized pair of vibrator contacts. The rectified output is pulsating dc, which may be filtered by ordinary means. The smoothing filter can be a single-section affair, but the output capacitance should be fairly large – 16 to 32 μF.

Fig. 10-25 shows the two types of circuits. At A is shown the nonsynchronous type of vibrator. When the battery is disconnected the reed is midway between the two contacts, touching neither. On closing the battery circuit the magnet coil pulls the reed into contact with one contact point, causing current to flow through the lower half of the transformer primary winding. Simultaneously, the magnet coil is short-circuited, de-energizing it, and the reed swings back. Inertia carries the reed into contact with the upper point, causing current to flow through the upper half of the transformer primary. The magnet coil again is energized, and the cycle repeats itself.

The synchronous circuit of Fig. 10-25B is provided with an extra pair of contacts which rectifies the secondary output of the transformer, thus eliminating the need for a separate rectifier tube. The secondary center tap furnishes the positive output terminal when the relative polarities of primary and secondary windings are correct. The proper connections may be determined by experiment.

The buffer capacitor, C2, across the secondary of T, absorbs spikes that occur on breaking the current, when the magnetic field collapses almost instantly and hence causes high voltages to be induced in the secondary. Without C2 excessive sparking occurs at the vibrator contacts, shortening the vibrator life. Resistor R1 is part of the buffer and serves as a fuse if C2 should short out, thus protecting the vibrator and transformer from damage. Values between 1000 and 5600 ohms, 1 watt, are commonly used. Correct values for C2 lie between .005 and .03 μF, and for 220-350-V supplies the capacitor should be rated at 2000 V or better, dc. The exact capacitance is critical, and should be determined experimentally while observing the output waveform on an oscilloscope for the least noise output. Alternatively, though not as effective a method, the capacitor can be selected for least sparking at the vibrator contacts.

Vibrator-transformer units are available in a variety of power and voltage ratings. Representative units vary from one delivering 125 to 200 volts at 100 mA to others that have a 400-volt output rating at 150 mA. Most units come supplied with "hash" filters, but not all of them have built-in ripple filters. The requirements for ripple filters are similar to those for ac supplies. The usual efficiency of vibrator packs is in the vicinity of 70 percent, so a 300-volt 200-mA unit will draw approximately 15 amperes from a 6-volt storage battery. Special vibrator transformers are also available from transformer manufacturers so that the amateur may build his own supply if he so desires. These have dc output ratings varying from 150 volts at 40 mA to 330 volts at 135 mA.

"Hash" Elimination

Sparking at the vibrator contacts causes rf interference ("hash," which can be distinguished from hum by its harsh, sharper pitch) when used with a receiver. To minimize this, rf filters are incorporated, consisting of RFC1 and C1 in the battery circuit, and RFC2 with C3 in the dc output circuit.

Equally as important as the hash filter is thorough shielding of the power supply and its connecting leads, since even a small piece of wire or metal will radiate enough rf to cause interference in a sensitive amateur receiver.

TRANSISTORIZED POWER SUPPLIES

Most present-day mobile equipment is powered by solid-state dc-to-dc converters. They are somewhat similar to vibrator supplies in that they use power transistors to switch the primary voltage of the transformer. This technique eliminates sparking in the switching circuit, and offers greater reliability and efficiency. The switching transistors can be made to oscillate, by means of a feedback winding on the transformer, and by application of forward bias on the bases of the switching

transistors. The switching rate can be set for any frequency between 50 Hz and several thousand Hz and depends to a great extent upon the inductance of the transformer windings. The switching waveform is a square wave. Therefore, the supply is capable of causing a buzzing sound in transmitter or receiver output in much the same fashion as with a vibrator supply. Rf filtering should be employed as a corrective measure. At higher switching rates the buzz becomes a whine which sounds like that from a dynamotor. High-frequency switching rates are preferred for dc-to-dc converters because smaller transformer cores can be used, and because less output filtering is required. The efficiency of a well-designed solid-state power suuply is on the order of 80 percent, an improvement over the usual 60 to 70 percent of vibrator supplies, or the miserable 30 to 40 percent of dynamotors.

A typical transistorized supply is shown in Fig. 10-26. The supply voltage is fed into the emitter circuit of Q1-Q2. A resistive divider is used to obtain forward bias for the transistors through base-feedback-winding 1. The primary switching takes place between the emitter and collector of each transistor. Q1 and Q2 are connected in push-pull and conduct on alternate half cycles. As each transistor is driven into conduction it saturates, thus forming a closed contact in that leg of the circuit. The induced voltage is stepped up by T, and high-voltage appears across winding 3. Zener diodes CR1 and CR2 protect Q1 and Q2 from voltage spikes. They should be rated at a voltage slightly lower than the Vce of the transistors. Diodes CR3 through CR6 form a bridge rectifier to provide dc output from winding 3. Some supplies operate at a switching rate of 2000 to 3000 Hz. It is possible to operate such units without using output rectifiers, but good filtering is needed to remove the ripple from the dc output.

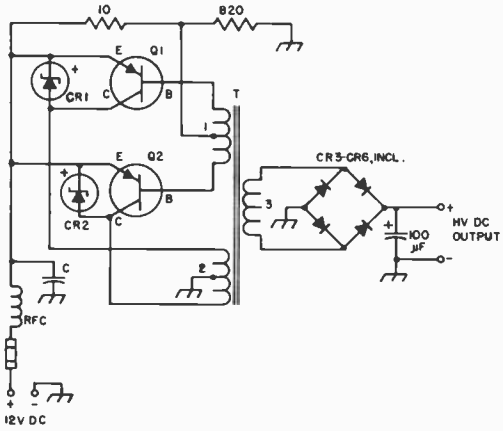

Fig. 10-26 — Typical dc-to-dc converter. Ratings for CR3-CR6, and the 100-µF filter capacitor can be selected from data in the power-supply chapter.

Transistor Selection

The switching transistors should be able to handle the primary current of the transformer. Since the feedback will diminish as the secondary load is increased, the beta of the transistors, plus the design of the feedback circuit, must be sufficient to sustain oscillation under full-load conditions. During no-load conditions, the feedback voltage will reach its highest peak at the bases of Q1 and Q2. Therefore, the transistors must be rated for whatever base-emitter reverse voltage that occurs during the cutoff period. Since the transistors must be able to handle whatever peak voltage occurs during the switching process, it is wise to stay on the safe side. Choose transistors that have a Vceo rating of three or four times the supply voltage, keeping in mind that fully charged automobile batteries can deliver as much as 14 volts. Heat sinks should be used on Q1 and Q2 to prevent damage from excessive heating. The larger the heat sink, the better. Under full-load conditions the transistors should only be slightly warm to the touch. If they are running hot, this will indicate inadequate heat sinking, too great a secondary load, or too much feedback. *Use only enough feedback to sustain oscillation under full loading*, and to assure rapid starting under the same conditions.

MOBILE POWER SUPPLY FOR TRANSCEIVERS

Transceivers, such as the Heath SB-102, and the Drake TR-4 require a separate power supply when operated from 12-volts dc. Additionally, linear amplifiers can be run from a separate dc supply to allow increased power operation from relatively low-power transceivers. The unit described here, when operated from 12-volts dc, will deliver approximately 900-volts dc at 300 mA, 250-volts dc at 200 mA, negative 150-volts dc at 40 mA, and an adjustable bias voltage from 10 to 150 volts of dc.

The Circuit

A common-emitter configuration is used with diodes to provide a return path for the feedback winding, as shown in Fig. 10-28. Assuming that Q2 conducts first, the base is driven negative by the feedback winding (connections 6 and 7 on T1). CR15 then conducts, thereby protecting the base of Q1. CR14 is back-biased to an open circuit when Q2 is conducting. When T1 saturates producing a square wave, the voltage at pins 6 and 7 of T1 reverses turning on Q1. When Q2 conducts, current flows through the primary of T2 in one direction and as Q1 conducts, current flows through the primary of T2 in the other direction. This reversal of current in the primary of T2 provides an alternating square-wave voltage which is stepped up by the secondary winding. Full-wave rectification with current limiting is used with each secondary winding.

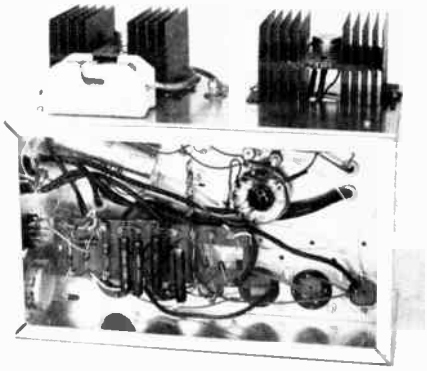

Fig. 10-27 — The heat sinks are mounted on an aluminum panel. When installing a power supply of this type, be sure to keep the heat sink fins in a vertical position to provide best air circulation. All of the filter capacitors are mounted in a row across the front of the chassis. RFC1 is located next to the transformer. Two sockets are mounted on the chassis side wall to accept an interconnecting cable from the transceiver. To the left of these sockets is the bias voltage adjustment control, R3. This model of the power supply was built by W8HS and assistance was given by W8DDO, W9IWJ (of Delco Radio Corp.), and Jim Osborne (of Osborne Transformer Co.).

The supply oscillates at about 1000 Hz and audible noise is low. The main power to the supply is applied through K1B. K1A can be connected in parallel with the filament supply in the transceiver.

Hash filtering is provided by RFC1 and its associated bypass capacitors in the primary lead. Transient suppression is assured by CR13, CR16 and CR17. Bleeder resistors are used on each supply leg to provide a constant minimum load for the circuit. The supply can be operated without being connected to its load without fear of damaging the diodes or transistors, although this is not considered good practice. Input and output connectors for interconnection to the battery and the transceiver can be selected to meet the needs of the particular installation.

Construction

This circuit requires that the transistors be insulated from the heat sink. Suitable insulators are included with the devices. Silicone grease should be used to help conduct the heat away from the transistors.

No attempt has been made to make the supply small. It is built on a 12 X 6 X 3-inch chassis which allows plenty of room for the heavy conductors. The capacitors are mounted in a row along one side

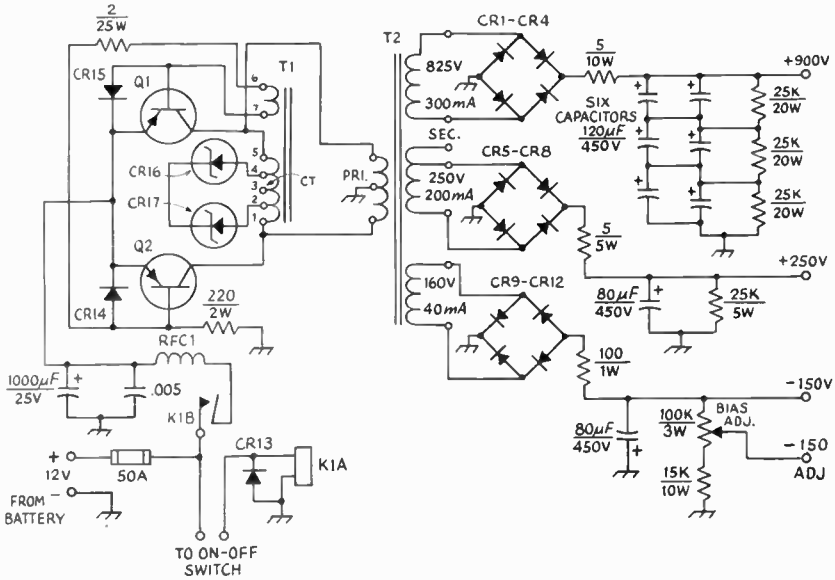

Fig. 10-28 — Circuit diagram of the mobile power supply. Polarized capacitors are electrolytic, others are paper or mica. Resistances are in ohms. Component designations not listed below are for text reference.

CR1-CR13, incl. — 1000-PRV, 1.5-A silicon diode (Mallory MR 2.5 A or equiv.).
CR14, CR15 — 50-PRV, 3-A silicon diode (G.E. A15F).
CR16, CR17 — 18-volt, 1-watt, Zener diode (Motorola 1N4746).
K1 — Spst contactor relay, 60-A, 12-volt dc coil (Potter and Brumfield MB3D).
Q1, Q2 — Delco 2N1523 transistor (substitutions not recommended). Delco insulator kits (No. 7274633) are required. The heat sinks are Delco part No. 7281366.
R3 — 100,000-ohm, 3-watt, linear-taper control.
RFC1 — 20 turns, No. 10 enam. wire on a 1/4-inch dowel.
T1 — Feedback transformer, 1000-Hz (Osborne 6784).
T2 — Hipersil transformer, 1000-Hz (Osborne 21555).

of the chassis. The heat sinks, shown in the photograph, are mounted on a 1/8-inch-thick aluminum back plate.

The leads from the battery to the relay, and from the relay to the transistors and T1, should be No. 6 or No. 8 conductors. All ground leads should be connected to one point on the chassis. The wiring layout is uncritical and no other special precautions are necessary.

Operation

The power supply should be mounted as close to the battery terminals as possible to minimize voltage drop. If the supply is trunk mounted, 1/4-inch conductors should be used to connect it to the battery. A 300-volt tap is available on the secondary of T2. If the transciever requires more than 250 volts for proper operation, this tap can be used.

DC-TO-AC INVERTERS

It is possible to convert the automotive battery voltage from 12-volt dc to 117-volt ac, 60 Hz, by using an inverter. The principle of operation is substantially the same as for dc-to-dc converters, but larger transformers are needed to handle the lower switching rate. The primary circuit is the same as for the dc converters, but the secondary voltage is not rectified. Square-wave output is obtained, though some commercial inverters are available with sine-wave output. The latter is recommended for operating motor-driven equipment. The square-wave types introduce some buzz into the equipment they power, but a brute-force line filter can be used to knock down some of the harmonic energy from the square-wave output. Inverters are useful for powering soldering irons, light bulbs during portable/emergency operations, and to power small ac-operated transceivers. They are commercially available at power levels up to 500 watts or more, but the larger the unit the greater the demand on the car battery.

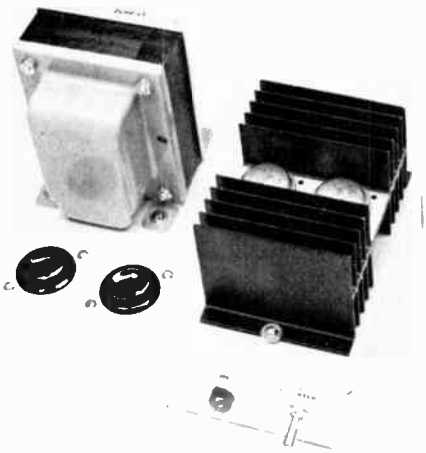

Fig. 10-29 — Top view of the dc-to-ac inverter. The transistors and their heat sink are at the right. Two ac outlets are used, offering greater convenience than would be possible with a single receptacle. A neon lamp lights when the unit is operation.

A HOME-MADE 175-WATT INVERTER

The unit shown here provides 60-Hz output, square wave, and has taps for 110, 117 or 125-volts. Because of the square-wave output, some hash noise may appear in the output of transmitters or receivers that are operated from the supply. If so, some form of filtering may be necessary at the output of the inverter.[1]

Construction

The inverter is built on a homemade base which measures 8 X 6 X 2 inches. A Bud CU-3009-A Minibox can be used as a chassis. Rubber feet are attached to the bottom cover of the Minibox to help prevent the assembly from scratching the automobile's finish if it is to be placed on the hood or trunk.

A large heat sink is used for cooling Q1 and Q2. The unit shown here is 4 inches long, 3 inches wide, and 2 inches high. It was manufactured by Delco Radio (part number 7281366). Any heat sink of similar dimensions will work satisfactorily. Because the circuit is operated in a common-collector configuration, the transistors need not be insulated from the heat sink, nor is it necessary to insulate the heat sink from the chassis. Silicone grease is used between the transistors and the heat sink, and between the heat sink and the chassis. This contributes to efficient heat transfer between the transistors and the thermal hardware.

All leads carrying primary current should be of large circular-mil size in order to prevent a voltage drop in that part of the circuit. Parallel sections of ac zip cord are used in this model. They are used between the input terminal block and the fuse holder, between the fuse holder and the toggle switch, and between the switch and the primary leads of T1. A dpst toggle switch is used at S1 to permit both sections to be used in parallel, increasing the current-handling capacity.

Two ac outlets are located on the top-front of the chassis so that more than one piece of equipment can be plugged in at the same time.

[1] A brute-force line filter is often helpful in reducing this type of hash. Commercial units of this kind are available from most wholesale houses (J. W. Miller Co., No. 7818). A homemade filter might consist of two scramble-wound inductors containing 10 feet (each) of No. 12 enameled copper wire. A coil would be placed in each leg of the ac output. Four 0.1-μF 600-volt paper capacitors would be needed. They would be connected between the ends of each coil and ground. Such a filter could be built on the inverter chassis, or contained in its own case, outboard fashion.

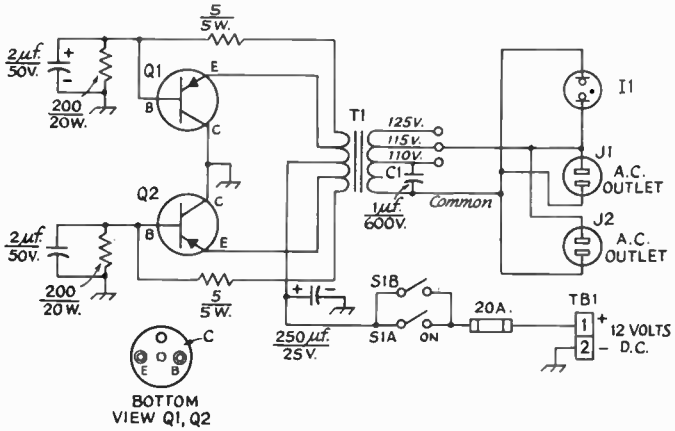

Fig. 10-30 — Schematic diagram of the inverter. Capacitance is in µF. Polarized capacitors are electrolytic. Resistance is in ohms.
C1 — 1-µF 600-volt capacitor (paper type only).
DS1 — Neon panel-lamp assembly with built-in dropping resistor.
J1, J2 — Standard female-type ac outlet socket.
Q1, Q2 — High-wattage power transistor. 2N278 used here. (2N678, 2N1146, 2N173 suitable.)
S1 — Dpdt toggle switch with sections in parallel.
T1 — Inverter transformer, 12 volts dc to 117 volts ac (Triad TY-75A).
TB1 — Two-terminal connector (Millen 37302 suitable).

Operation

In using the inverter, it is wise to have some kind of a load connected across the output of the unit when it is turned on. Without a secondary load, voltage peaks can occur and cause the destruction of the switching transistors, Q1 and Q2. The best procedure is to attach the equipment to the inverter's outlet receptacle, turn the equipment on, then activate the inverter by turning it on with S1. In turning the system off, this process should be reversed — turning the inverter off first, then the equipment.

Motor-operated equipment such as tape recorders and record players will not function satisfactorily from this inverter and should not be used with it. Also, make certain that the equipment which is to be operated from the inverter does not draw more than 100 watts if continuous-duty operation is planned. The inverter should safely handle intermittent loads of up to 175 watts.

For maximum efficiency, the inverter should be connected directly to the car-battery terminals by means of large-diameter conductors. The shorter the conductor length, the less voltage drop there will be in the line.

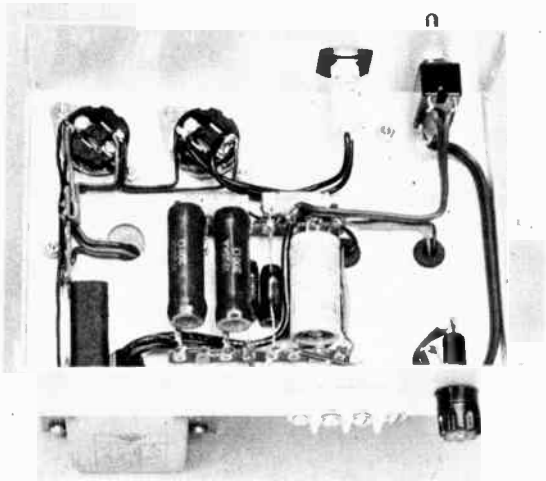

Fig. 10-31 — A look at the underside of the chassis. The resistors and capacitors are mounted between insulated terminal strips. Ac zip cord, paralleled, is used for the heavy-duty primary wiring.

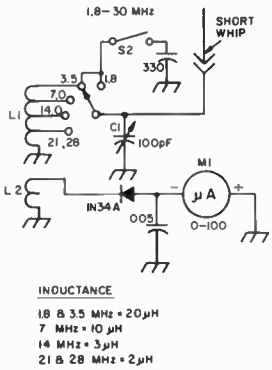

Fig. 10-32 — A band-switched field-strength meter for tuning up the hf-band mobile antenna. It should be assembled in a metal box. In use, it should be placed several feet from the antenna under test. C1 is tuned for a peak meter reading at the operating frequency. It can be detuned for varying the sensitivity.

A BAND-SWITCHING FIELD-STRENGTH METER

The circuit of Fig. 10-32 can be used for tuning the mobile antenna system to resonance. It covers a range from 1.8 to 30 MHz. A single toroidal inductor is used in the tuned circuit. The coil is tapped to provide band switching by means of S1. C1 is tuned for a peak meter reading at the transmitter's output frequency. The unit should be housed in a metal utility box. A banana jack can be used for attaching the short whip antenna.

An Amidon Associates E-core, No. T-68-2, is wound with 50 turns of No. 26 enamel wire. It is tapped 10 turns from ground for 15- and 10-meter use, 18 turns from ground for 20 meters, and 36 turns above ground for 40 meters. The entire 50 turns are used for 80 and 160 meters. S2 adds a 330-pF capacitor for 160-meter operation. S1 can be a single wafer, single-pole, 5-position rotary switch of phenolic or ceramic insulation. S2 can be a spst slide switch. C1 is a Hammarlund HF-100 capacitor, or equivalent. (Amidon cores can be obtained from Amidon Associates, 12033 Otsego St., N. Hollywood, CA 91607.)

A PORTABLE STATION FOR 3.5 AND 7 MHz

The transmitter section of this solid-state transceiver operates at 2-watts dc input to the PA stage. A direct-conversion receiver permits reception of the two bands, and uses a dual-gate MOSFET as the product detector. A built-in VFO permits frequency coverage from 3.5 to 3.8 MHz, and from 7 to 7.3 MHz. The VFO is the local oscillator for the receiver (BFO), and functions as the transmitter VFO when crystal-control operation is not desired. This QRP cw package should be useful for fixed-station work as well as for portable and emergency applications. It will operate from 11- to 14-volts dc, and requires less than 500 mA of current from the battery or ac-operated dc supply.

Though circuit-board construction is shown here, the older style chassis, socket, and point-to-point hookup technique is acceptable. The main consideration is that a neat layout be used, and that signal leads be kept as short and direct as possible (from August 1970 *QST*).

Fig. 10-33 — Front view of the cw transceiver. The chassis and cabinet are homemade, and consist of two U-shaped pieces of thick aluminum stock. The panel is painted dark green to permit the white decal labels to stand out prominently.

The Receiver Section

Referring to Fig. 10-34, the product detector is an RCA 40673 MOSFET. The device has built-in transient suppressors to protect it from static-charge damage, or from excessive levels of rf voltage on its gates. Detector Q1 provides good conversion gain, low-noise operation, and good isolation between the input tuned circuit and the VFO.

The rf gain control, R1, is useful when strong local signals are present, preventing the receiver from being overloaded. It can be omitted by those wishing to save a few coins.

Input tuned circuit L1C1 is quite selective, but a double-tuned, bottom-coupled circuit could be substituted if more selectivity is desired. Output from Q1 is fed to the cw filter through T1. When S7 is switched to SHARP a pronounced peak response occurs at 800 Hz. In the remaining position the switch places a 5-μF capacitor in parallel with C9 to broaden the response. The capacitor values for C8, C9 and C11 (Fig. 10-34) are not standard. These Butterworth values can be made by paralleling standard values which are available, or C8 and C11 can be 0.47-μF units, and C9 can be a 0.1-μF capacitor. There will be little apparent difference in the performance if these values are juggled.

Audio preamplifier U1 is an RCA kit module, KC4000. In RCA's recommended hookup C12 of Fig. 10-34 is a 25-μF unit. It was found that this value, in combination with R7, set up a long time constant. This introduced a troublesome delay in recovery time when switching from transmit to receive. The problem was cured by using a 1-μF capacitor at C12. Those wishing to use bipolar transistors in place of U1 can employ the circuit of Fig. 10-35.

Audio output stage U2 delivers 1 watt of output into an 8-ohm load when driven by a 40-mV audio signal. It operates constantly. During transmit it amplifies the sidetone monitor signal to speaker volume. Strong signals will drive U2's current as high as 180 mA, but the resting current is low — approximately 30 mA. When high-impedance phones are connected to J3 there is little increase over the resting current, no matter how loud the signal, because of the mismatch condition. The audio output will still be ample. This suggests the use of 2000-ohm phones when using a dry-cell pack if one wishes to prolong battery life.

An effort was made to match the receiver's performance to that of the transmitter. So, the audio amplifier portion of this unit is a bit marginal for that reason. Any cw signal that is 2 μV or greater in level will produce a readable beat note during normal band conditions. In lab tests,

Fig. 10-34 — Schematic diagram of the main portion of the equipment. Assembly Z1 is the VFO of Fig. 10-36. Part numbers in this diagram are identical to some of those in Fig. 10-36, though no similarity between the components necessarily exists. Numbered parts in this diagram which are not listed below are so numbered for circuit-board identification and text discussion. Fixed-value resistors are 1/2-watt carbon unless otherwise noted. Fixed-value capacitors are mica or disk ceramic unless otherwise indicated. Polarized capacitors are electrolytic.

C1, C28, C34 — 365-pF variable (J. W. Miller 2111 or similar).

C8, C9, C11 — See text for alternate values. (Cornell-Dubilier DMF dipped polyester or equivalent type.)

Cf — Feedback capacitor, silver mica (see text).

CR1 — 36-volt, 1-watt Zener (IOR 1N4753 or similar).

CR2 — 2-ampere, 50-volt silicon (IOR 20A05 or equiv.).

J1 — Crystal socket.

J2, J3 — Open-circuit phone jack.

J4 — SO-239-type coax chassis connector.

J5 — RCA phono jack, single-hole mount.

J6 — Two-terminal connector (Amphenol 75PC1M audio connector used in this model).

L1, L6 — 7-μH toroidal inductor. 34 turns No. 24 formvar-insulated copper wire, single-layer-wound on Amidon T-68-2 core. (Tap each coil four turns from ground end.)

L2, L3 — 88-mH telephone-type toroid inductor (see *QST* Ham Ads for suppliers). Join either pair of adjacent wires, and use remaining pair of wires for circuit connection.

L4 — 7-μH toroid inductor. 40 turns No. 26 formvar-insulated copper wire on Amidon T-50-2 core. Tap 6 turns from B+ end.

L5 — 5 turns No. 26 insulated wire wound over L4 near tapped end. Use layer of insulating tape between L4 and L5.

L7 — 6 turns No. 24 insulated wire wound over tapped end of L6. Use insulating tape between L6 and L7.

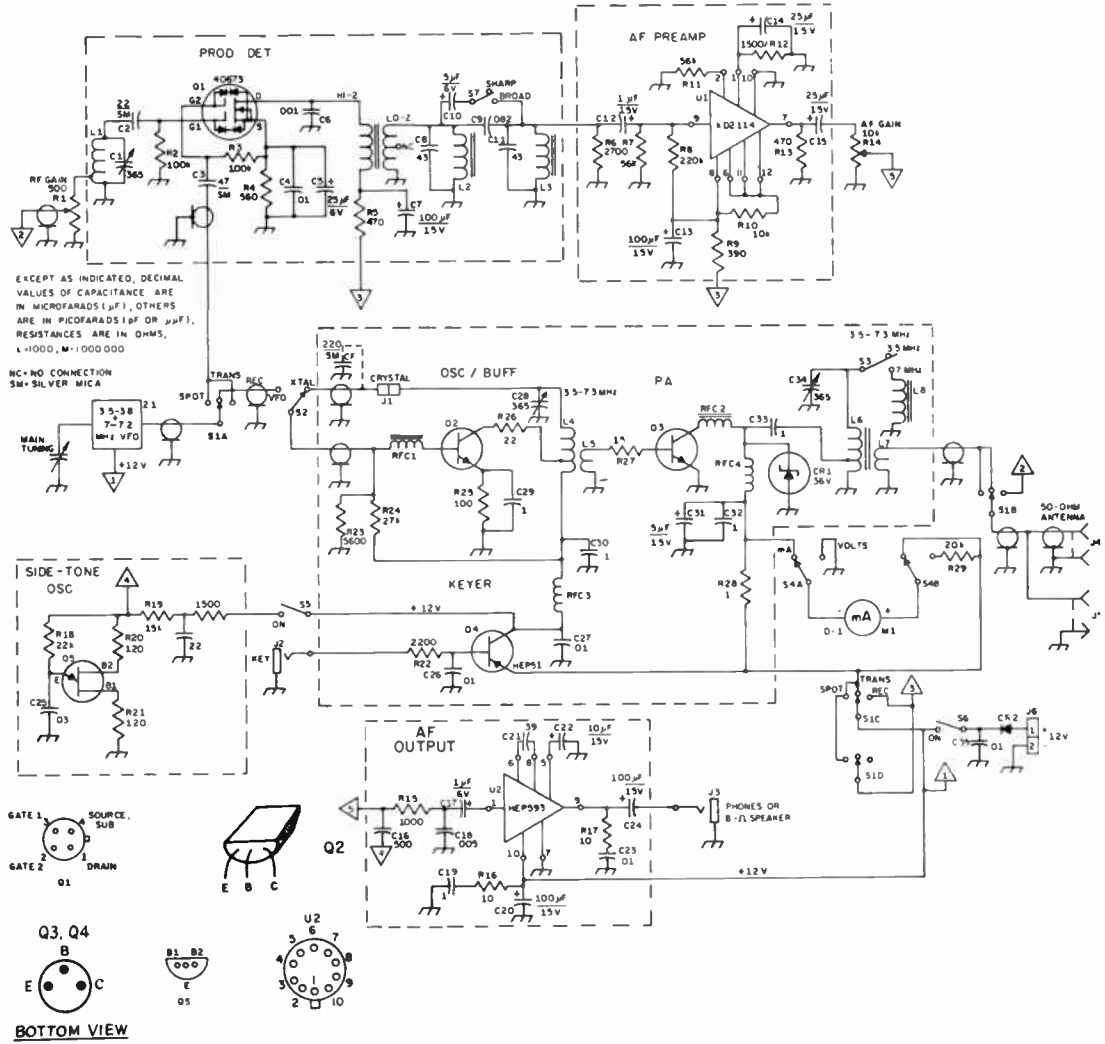

without atmospheric noise and QRM present, a 0.3-μV signal was perfectly discernible while using the speaker.

Transmitter

The input to Q2 is switched to allow VFO or crystal operation. Capacitor C_f is in the feedback circuit, and should be chosen experimentally for best results. In the author's circuit a value of 220 pF worked best, but the builder should try different values (between 100 and 1000 pF) to obtain the best cw note, and to prevent Q3 from being driven too hard when crystals are used. Q3 should not draw more than 200 mA at collector-current dip. Off-resonance current should not be allowed to exceed 250 mA. VFO operation results in slightly lower drive, so no problem should exist in that mode. C_f may not be needed if a low-beta transistor is used at Q2. *Always remove the crystal from J1 during VFO operation.*

Tuned collector circuit L4-C28 covers both bands. C28 is set near maximum capacitance at 3.5 MHz, and is adjusted for near-minimum plate meshing at 7 MHz. Transistor switch Q4 turns the collector supply of Q2 on and off when its base is keyed at J2. The unijunction sidetone oscillator, Q5, is also keyed by Q4, and its output is routed at low level to U2 for amplification to loudspeaker volume. The pitch of the monitor signal is 1000 Hz.

The PA stage, Q3, operates Class C. It uses a toroidal tank inductor, as does Q1 and Q2.[1] Resonance on 80 meters occurs when C34 is almost fully meshed. For operation on 40 meters, L8, another toroid coil, is shunted across L6 to lower the inductance. The normal 40-meter setting for C34 is with its plate about 1/3 meshed. A 36-volt, 1-watt Zener diode, CR1, prevents excessive collector rf voltage if the operator mistakenly keys the transmitter when no load is present at J4, or when the SWR is high. Either condition could easily destroy Q3.

Meter M1 monitors the collector current of Q3, and reads the supply voltage when S4 is switched to VOLTAGE. A 0- to 1-mA Simpson meter is used in this unit, but other brands can also be employed. The Simpson meter requires a 0.1-ohm shunt to give a full-scale current of 400 mA (a times 400 factor). A 20,000-ohm series resistor, R29, provides a full-scale reading of 20 volts (a times 20 factor). If other meters are used at M1, R28 must be selected to give a 400-mA full-scale reading in accordance with the meter's internal resistance. R1 here is 28-inch length of No. 26 enameled wire, wound on the body of a 100,000-ohm, 1-watt resistor. The pigtails are used as anchor points for the winding.

Antenna jacks J4 and J5 are in parallel. One is an SO-239-type coax fitting. The other is a phono jack. The two types permit greater flexibility when making connections to accessory equipment. A polarity-guarding diode, CR2, prevents damage to the semiconductors should the operator mistakenly cross-connect the supply leads. Only positive voltage will flow through CR2.

The transmitter is protected from vhf and low-frequency instability. Ferrite beads are used as vhf chokes at Q2 and Q3 to tame the stages. Also, the dc leads are bypassed and filtered to prevent low-frequency oscillations.[2]

The VFO

This section of the transceiver was described in depth in June 1970 *QST*. Only the basic information relating to it is given here. The circuit is given in Fig. 10-36, and shows two separate tuned circuits – one for 3.5 to 3.8 MHz, and one for 7 to 7.2 MHz. Component numbering used here relates only to the VFO assembly and should not

[1] Toroid cores and ferrite beads are available from Amidon Associates, 12033 Otsego Street, N. Hollywood, CA 91607.

[2] DeMaw, "Some Tips on Solid-State VFO Design," *QST*, May 1970.

L8 – Same as L1.
M1 – 0 to 1-mA meter (Simpson Model 2121 used here). Other 1-mA meters are suitable if R28 is chosen for their internal resistances.
Q1 – RCA 40673 dual-gate MOSFET.
Q2 – Motorola MPS6514 or equivalent type.
Q3 – 2N3553. Possible substitutes are RCA 2N2102 or Motorola 2N4427.
Q4 – Motorola HEP-51 transistor or equiv.
Q5 – Motorola HEP-310 unijunction transistor.
R1 – 500-ohm, linear-taper carbon control.
R14 – 10,000-ohm, audio-taper carbon control.
R18, R28 – See text.
R29 – 20,000 ohms, 1/2-watt 5-percent. (Provides 20 volts full-scale reading when used with 1-mA meter.)
RFC1, RFC2 – Three Amidon ferrite beads on 3/8-inch length of No. 22 wire. Place close to transistor.
RFC3, RFC4 – 25-μH rf choke (James Millen J-300-25 or equiv.).
S1 – 4-pole, 3-position, non-shorting, single-section phenolic wafer switch (Mallory 3243J or similar).
S2, S5 – Spdt slide switch.
S3 – Spst slide switch.
S4 – Dpdt slide switch.
S6 – Spst switch (part of R14 control).
S7 – Same as S3.
T1 – 10,000-ohm primary to 2000-ohm secondary miniature audio trans. (Lafayette Radio TR-98 driver or equivalent).
U1 – RCA IC furnished with KC4000 audio kit module. (See substitute circuit of Fig. 10-42.)
U2 – 1-watt transformerless audio IC (Motorola HEP-593 or MC1554).

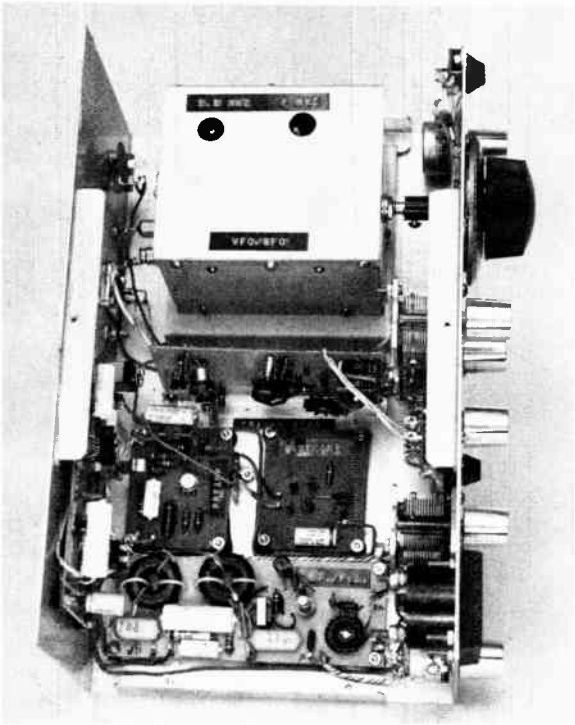

Inside view of the assembled transceiver (below). The VFO is housed in the large box at the upper center. Directly below the VFO (edge mounted) is the transmitter board. The audio preamp. and side-tone oscillator boards are flush-mounted below the transmitter module. The main receiver board (with filter) is visible at the lower edge of the chassis. The audio output board is mounted flush against the rear wall (left) of the chassis.

be confused with similar numbers assigned to the components when in the main portion of the transceiver. The VFO is shown as Z1 in Fig. 10-34.

Output from Q1 is taken across R4. Direct coupling is used between the low-impedance takeoff point of Q1 and the base of emitter-follower, Q2. Resistor R5 sets the forward bias of Q2 by picking some dc voltage off the emitter of Q1. Sufficient rf passes through R5 to drive Q2, and it can be seen that there is no measurable loss in peak voltage across R5. There are 6 volts, peak to peak, across the emitter resistor of Q1, and from base to ground at Q2, as measured with a Tektronix Model R453 oscilloscope.

The collector of Q2 is bypassed for high and low frequencies to assure stability. A 100-ohm collector resistor, R6, decouples the stages at rf. C11 is a feedthrough capacitor that mounts on the wall of the VFO enclosure, and is a further aid to overall circuit stability. It helps to keep unwanted rf from entering the VFO box along the 12-volt line.

Output is taken from the emitter of Q2 through a small-value capacitor, C10. The larger the capacitance, the greater will be the available output voltage across a given load, but the smaller the capacitance value used, the better will be the VFO isolation from the succeeding circuit. One should use only the amount of capacitance that will provide adequate peak output voltage. Typical peak-to-peak voltages across some known loads are given on the schematic diagram. These readings were obtained with the 47-pF capacitor, C10, shown in Fig. 10-36. The load that Q2 looks into is approximately 500 ohms, the base input impedance of the keyed Class A amplifier stage. Resistor R5 is mounted close to the base terminal of Q2, and serves as a vhf parasitic suppressor.

Assembling the VFO

In the interest of mechanical stability this VFO has most of its components mounted on a circuit board. There is no reason why the builder cannot use point-to-point wiring if he does not wish to use a circuit board, but the method shown here is preferred.

The circuit board measures 3 1/4 X 4 inches.[3] The homemade aluminum box uses 1/16-inch-thick stock to assure rigidity. The box is 3 inches high, 3 3/8 inches wide, and is 4 1/8 inches deep. A U-shaped top cover is attached by means of six sheet-metal screws. The bottom of the VFO is enclosed by the chassis bracket upon which it is mounted. There are seven No. 6 spade bolts attached to the lower portion of the box walls. These are used to anchor the VFO to the chassis bracket.

A half-scale layout for the VFO circuit board is given in Fig. 10-37. The main body of the aluminum box requires four 90-degree bends, and these can be made in a bench vise. The open ends

[3] Circuit boards for this and other *Handbook* projects are available from Stafford Electronics, 427 S. Benbow Rd., Greensboro, NC 24701.

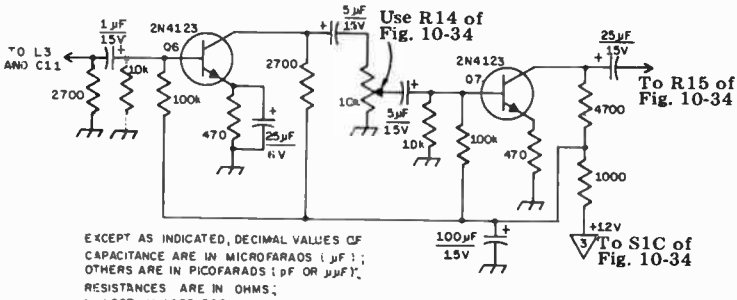

Fig. 10-35 — Suggested circuit for those wishing to substitute two bipolar transistors for the IC circuit shown in Fig. 10-34. Note that the audio gain control has been moved from the spot it occupies in Fig. 10-34. Component values here are not critical, so almost any audio npn transistor will work in this circuit. Q6 and Q7 can be 2N2925, MPS-A10, 2N4123, or equiv.

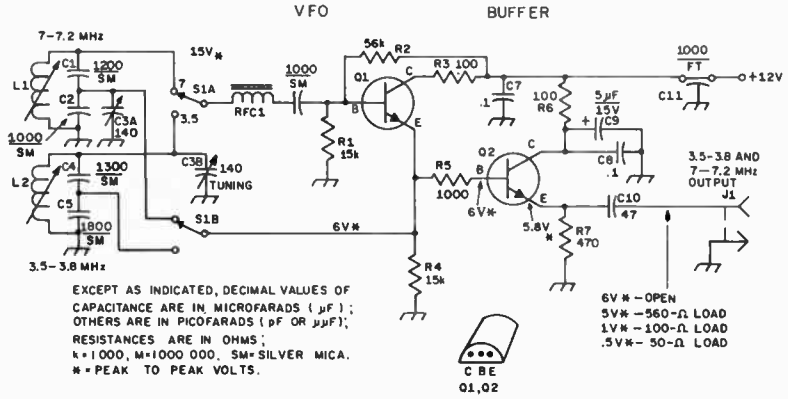

Fig. 10-36 — Schematic diagram of the two-band VFO. Fixed-value capacitors are disk ceramic unless otherwise noted. C9 is an electrolytic. Resistors are 1/2-watt composition. Numbered components not appearing in the parts list are so numbered for circuit-board identification purposes.

C3 — Dual-section miniature variable, 140-pF per section (Hammarlund HFD-140, or Millen 26140 RM).

J1 — RCA phono jack, single-hole mount.

L1 — 0.68- to 1.25-µH slug-tuned inductor (J. W. Miller 42A106CBI. J. W. Miller Co., 19070 Reyes Ave., Compton, CA 90221).

L2 — 2.2- to 4.1-µH slug-tuned inductor (J. W. Miller 42A336CBI).

Q1, Q2 — Motorola MPS6514. If substitute is used, it should have similar characteristics —Vceo of 30, hFE 150 to 300, and fT approximately 450 MHz. PD = 310 mW.

RFC1 — Three Amidon ferrite beads threaded on a 1/2-inch length of No. 22 wire. A 15-ohm, 1/2-watt resistor may serve as a substitute. (Amidon Assoc., 12033 Otsego St., N. Hollywood, CA 91607)

S1 — Dpdt slide switch (Oak 399278-278 or equiv.).

of the stock are joined at the rear-center of the box, and are secured by means of a single strip of aluminum that is 1 inch wide by 3 inches long. The strip is bolted to the box with four 4-40 screws and nuts.

Tuning capacitor C3 attaches to the front wall of the box by means of its threaded shaft bushing. A small aluminum bracket secures the rear end of C3 to the back wall of the box. Both ends of the capacitor should be firmly attached to the box walls as outlined. This will further enhance the mechanical stability of the VFO.

Band switch S1 is mounted on the side wall of the box so that the leads between it and the circuit board will be as short as possible. S1 is a two-pole double-throw slide switch.

Operation

The band switch for the VFO is accessible through a 1-inch hole in the side of the transceiver cabinet. It should be set for the desired band, then C1 of Fig. 10-34 is tuned for a peak response in signal. The peak is sharp, so tune carefully. There will be a marked increase in volume as the BFO is tuned across a signal, and this will occur at the filter's 800-Hz peak. Best results will be had after learning how to tune for this peak in audio response.

Transmitter tune-up is straightforward. It would be wise to practice tuning into a 50-ohm dummy load. Note the settings of the controls for both bands. This will make the tune-up chore a bit easier at future times. With the VFO set for the desired band, close the key and adjust C28 (Fig. 10-34) for maximum collector current at Q3, as noted on M1. Then quickly tune C34 for a dip in current. Make certain that C28 and C34 are set as outlined earlier. If not, a false peak or dip can result, indicating that the oscillator or PA is doubling, rather than operating straight-through.

When crystal-controlled operation is planned,

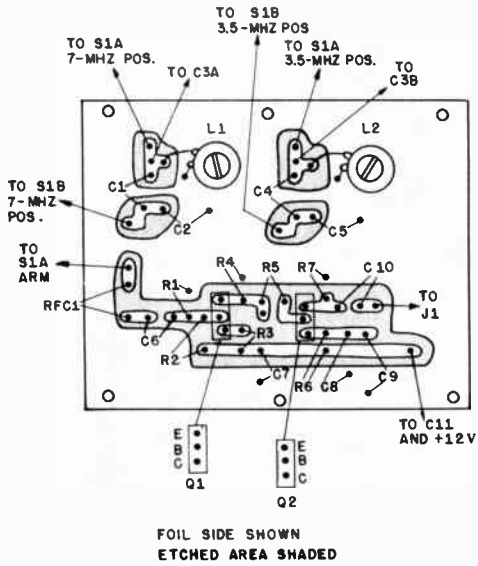

Fig. 10-37 — Half-scale template of the VFO circuit board. A foil-side view is shown here.

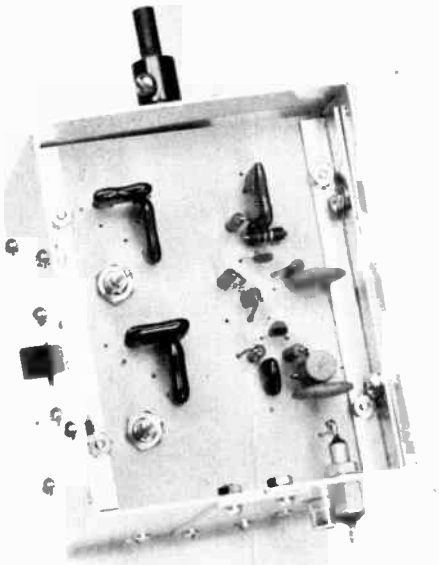

The circuit board is attached to the side walls of the VFO case by means of homemade aluminum L brackets. The board is recessed one inch into the enclosure. The dual-section tuning capacitor is attached to the front and rear walls of the box.

spotting can be achieved by throwing S1 (Fig. 10-34) to the SPOT position, then tuning the main dial until the signal is heard in the phones or speaker. In the SPOT position the transmitter and receiver are both activated, but the antenna is disconnected from the receiver.

Concluding Remarks

The type of cabinet used to house the transceiver is pretty much a matter of choice. This unit is larger than necessary, and the package could certainly be made much smaller in the interest of miniaturization. However, there is plenty of room for circuit additions. Also, equipment that is very small is often difficult to operate because of crowded panel space. This cabinet is fashioned from two U-shaped pieces of heavy-gauge aluminum. It is 12 inches wide, 8 inches deep, and 4 1/2 inches high. The speaker can be mounted inside the case if desired.

Templates for the major circuit boards can be obtained from the ARRL by sending 50 cents and a self-addressed stamped envelope. The template package includes the product detector/filter, audio output, and transmitter boards.

A matching console for this transceiver, containing a QRP SWR bridge and universal antenna coupler/Transmatch, is described later in this Chapter.

A PORTABLE TRANSMITTER FOR 21 MHz

The "milligallon" rig shown schematically in Fig. 10-39 was designed for the 15-meter band and uses two inexpensive epoxy-cased silicon transistors. The rig's simplicity is realized by operating the oscillator, Q1, in its third-overtone mode. Garden-variety 7-MHz crystals are used. The amplifier, Q2, operates in the common-emitter configuration and has a power input of almost one watt. Hence the name "milligallon." With a 12-volt power supply, the measured power output was one-half watt into a 50-ohm resistive load. With the transistor shown, the supply potential should not exceed 12 volts and modulation should not be applied to the Q2 collector. Diode CR1 and its associated circuitry provides a convenient means for tuning the transmitter and may be used with a VOM or VTVM. A method for measuring power output is included in Fig. 10-40.

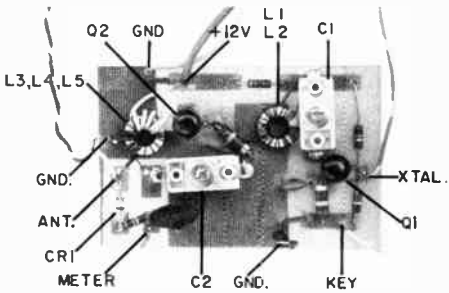

Fig. 10-38 — Plan-view photograph, full size, of the Milligallon. Principal components are identified in this view as an aid to assembly; ones not labeled can easily be recognized by referring to Fig. 10-39. The dark areas are copper backing on the opposite side of the translucent circuit board and correspond (reversed left to right) to the layout shown in Fig. 10-41. (Designed and built by W7ZOI.)

The transmitter is built on the 2 X 3-inch printed-circuit board shown in Figs. 10-38 and 10-41 and the finished circuit card is mounted inside a small aluminum box of suitable size. The crystal socket and circuit board should be mounted so that the interconnecting lead length is small.

Toroid coil forms[1] are used for both of the tuned circuits for reasons of compactness, shielding and economy. After the transmitter has been built, a 51-ohm resistor should be temporarily connected to the antenna terminals to serve as a dummy load. Adjust capacitor C1 for good keying as monitored in a communications receiver, and tune the output tank capacitor, C2, for maximum power output as indicated by a voltmeter connected to the meter terminals or the peak-reading rf voltmeter connected to the dummy load (Fig. 10-40). The transmitter should be used only with a well-matched 50- or 70-ohm antenna. If the SWR is

[1] The T-50-6 cores are available from Amidon Assoc., 12033 Otsego St., N. Hollywood, CA 91607. Fairchild transistors are available through any Fairchild distributor.

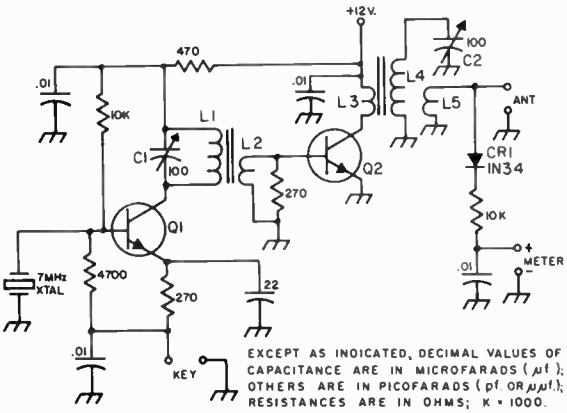

Fig. 10-39 — Circuit diagram of the 21-MHz "Milligallon." Fixed resistors are composition, 1/2 watt or smaller. Fixed capacitors are ceramic.
C1, C2 — 7- to 100-pF midget compression mica trimmer (Elmenco 423).
L1 — App. 2.5-μH; 23 turns No. 26 on ferrite toroid form (Amidon T-50-6, 0.5-inch OD; see also footnote 1).
L2 — 4 turns No. 26 on same form as L1.
L3 — 4 turns No. 22 on same type form as L1.
L4 — App. 0.8-μH; 13 turns No. 26 on same form as L2.
L5 — 3 turns No. 22 on same form as L3.
Q1, Q2 — 2N3641 (Fairchild) or equivalent.

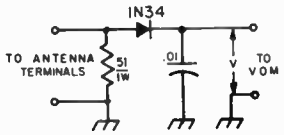

Fig. 10-40 — Dummy load and peak rectifier for measuring power output. The fixed capacitor is ceramic.

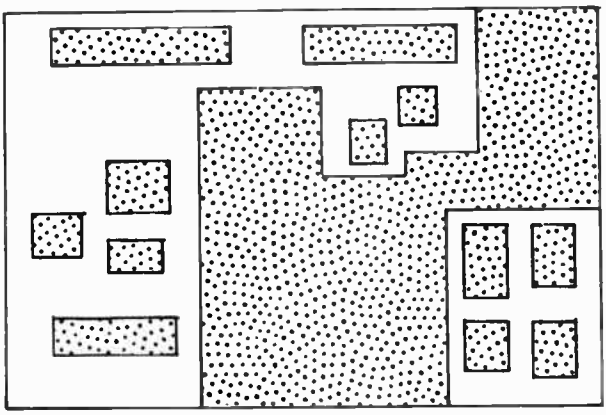

Fig. 10-41 — Circuit board layout (bottom view), full size. Shaded area is copper; white area is etched out.

excessive the builder should consider an antenna tuner such as the T network described by Johnson.[2] Capacitor C2 should be repeaked when the antenna system is connected.

Since the total current drawn by the transmitter is about 100 mA, power may be economically supplied by a 12-volt lantern battery.

The results obtainable with the milligallon will amaze all but the seasoned QRPer. In one month of operation, contacts were made all over the U.S. and Canada and with several stations in Japan. The antenna was a trap vertical.

[2] Johnson, "Band-Switching Transmatches," *QST*, October, 1967.

THE MK-II FM RECEIVER FOR 146 MHz

The simple receiver described here provides true fm reception. It uses a two-stage limiter and discriminator, a crystal-controlled converter for good stability, and a vernier drive for smooth tuning. Reception with the version shown is excellent. Selectivity is adequate for separating three local repeater output signals which fall at 146.79, 146.88 and 146.94 MHz. Sensitivity is such that a 0.2-μV signal with 5-kHz deviation is plainly audible. A 0.7-μV signal provides 20 dB of quieting. Limiting action is good on all but the weakest of signals.

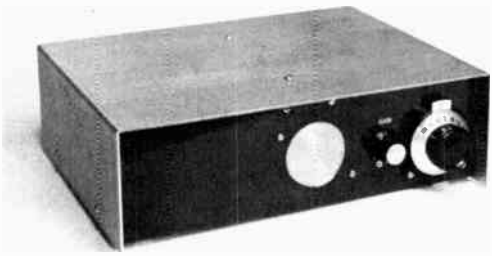

Fig. 10-42 — Front view of the completed 2-meter fm receiver.

Circuit Features

A block diagram of the MK-II is shown in Fig. 10-43. Two options are offered — FL1 for reducing images and cross modulation from nearby commer-

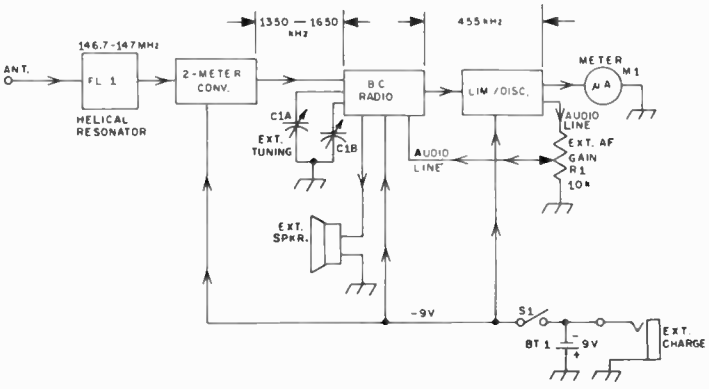

Fig. 10-43 — Block diagram of the assembled MK-II fm receiver. BT1 should be a large-size 9-volt battery, or 7 or 8 penlite cells connected in series.

C1 — Two-gang miniature variable, one section 40 pF and the other having 20 pF. See text. (J. W. Miller No. 1640 three-section unit used here, two gangs being connected in parallel.)

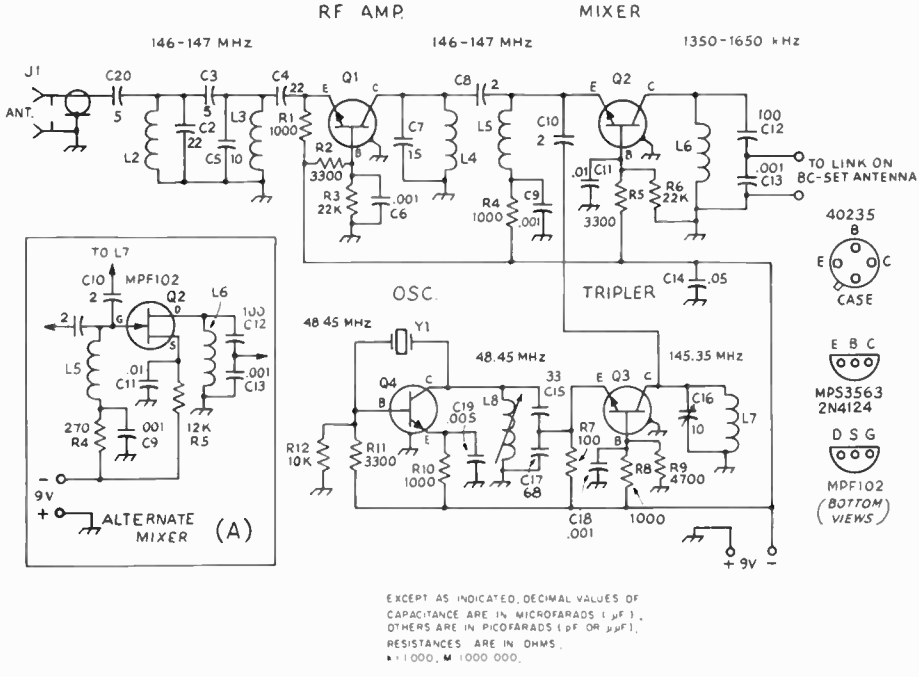

Fig. 10-44 — Circuit of the 2-meter converter. Parts not listed below are designated for pc-board layout purposes. Drawing A is discussed in the text. Fixed-value capacitors are disk ceramic. Resistors are 1/4- or 1/2-watt carbon.

C16 — 10-pF piston trimmer. Ceramic or pc-board air trimmer can be substituted.

J1 — SO-239-style chassis fitting.

L1 — Not used.

L2 — 3 turns No. 20 enam. wire, 3/16-inch ID, 1/8-inch long.

L3 — 4 turns No. 20 enam. wire, 3/16-inch ID, 5/16-inch long.

L4 — 5 turns No. 20 enam. wire, 3/16-inch ID, 5/16-inch long.

L5 — 15 turns No. 20 enam. wire, 3/16-inch ID, closewound.

L6 — 100-μH rf choke (Millen J302-100 or J. W. Miller 70F104A1 suitable). *Must be 100 μH in value.*

L7 — 5 turns No. 16 tinned copper wire, 1/4-inch ID, 3/8-inch long.

L8 — 10 turns No. 26 enam. wire, closewound on 1/4-inch dia slug-tuned form (J. W. Miller 4500-2 blank suitable). Variable inductance 0.35 to 0.6 μH required.

Q1-Q4, incl. — Npn bipolar transistor, RCA 40235 or 40637. Motorola 2N4124 or MPS3563 suitable, or any high-beta npn with f_T of 250 MHz or greater. (Q2 of inset A is Motorola MPF102, 2N5484, or HEP802.)

Y1 — 48.45-MHz 3rd-overtone crystal (International Crystal Co. type GP in FM-2 holder).

cial services, and M1, a zero-center tuning meter. The jack labeled EXTERNAL CHARGE should be included only if a nickel-cadmium battery is used.

Fig. 10-44 illustrates the converter circuit. Inset drawing A shows how the mixer can be changed to a JFET. The modification was tried in the receiver. It reduced cross-modulation effects caused by a nearby commercial repeater. Since the MPF102 is an N-channel device it will be necessary to employ the hookup shown (gate returned to the minus bus, and drain returned to chassis ground through L6). The values of resistors R4 and R5 will have to be changed as indicated. R6 will be deleted if the JFET is used. No other changes are required. Though it was not tried, a common-gate JFET rf amplifier might work nicely at Q1, but with reduced gain over the bipolar amplifier shown.

Those wishing to use the bipolar arrangement for all four stages of the converter, but with a negative ground system (such as mobile), can simply substitute pnp transistors for Q1 through Q4. The Motorola 2N4126 would be suitable for this purpose. The positive-ground approach was adopted here to make the two additional circuit boards compatible with the bc receiver, which has a positive-ground hookup. (The foregoing technique applies only to the use of the converter in combination with the car radio, and not with the remainder of the circuits described here.

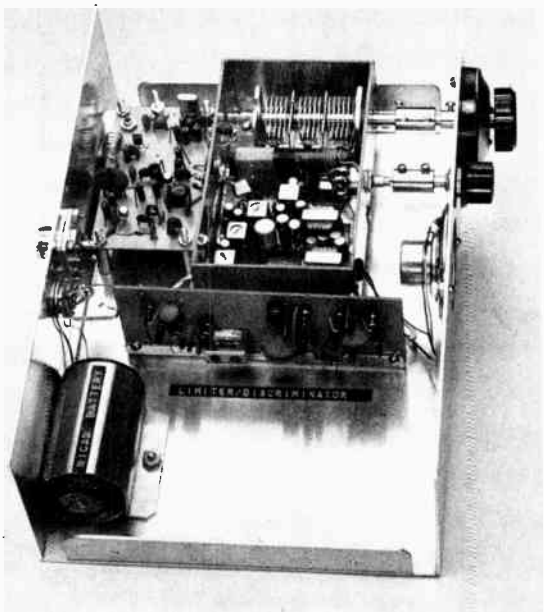

Fig. 10-45 — Inside view of the Pip-Squawk MK-II. The vacant area at the bottom has been reserved for a small transmitter and modulator. The limiter/discriminator board is mounted vertically by means of an L bracket. Four metal posts support the 2-meter converter at the upper left. The bc radio and its new tuning capacitor and gain control are housed in the shield compartment at the upper center. An aluminum cover is used to enclose the shield box during operation.

BC-Set Modifications

A 6-turn link of small-diameter hookup wire must be wound over the low-impedance end of the built-in ferrite-bar antenna of the bc set. This will connect to the i-f output of the converter by means of twisted wire or shielded conductor. The two-section tuning capacitor should be set at the high end of the bc band (1650 kHz or higher), then glued in position. Alternatively, it can be removed and discarded. A two-gang bandspread capacitor of approximately 20-pF maximum capacitance (oscillator section), and 40 pF in capacitance (maximum) for the mixer section is wired in parallel with the tuning capacitor in the set. A three-section J. W. Miller component was used in the writer's model. Each section is 20-pF maximum capacitance, so two of the gangs are wired in parallel to provide 40 pF for the mixer tuning. A two-section broadcast variable can be used by removing the proper number of plates to secure the desired bandspread. Other styles of two-gang variables can be modified in a like manner.

Fig. 10-46 shows the typical configuration used at the second i-f amplifier and detector of most imported pocket-size bc sets. After locating the detector diode, CR1, the modifications shown can be made. Remove all components between the letters A and B. Audio gain control R2 can be replaced by a panel-mount type of the same value (with switch), or the ingenious builder can retain the original part and mount it on the front panel of the MK-II. Terminals A and B will connect to the limiter/detector board of Fig. 10-47.

The speaker from the bc radio is mounted on the front panel of the MK-II. In fact, the speaker grille from the bc set was pried off the plastic case and used between the speaker and the front panel in true miserly fashion. Some sets do not have separate grilles, so perforated metal or circuit board can be used to protect the speaker cone.

Limiter/Discriminator

The circuit of Fig. 10-47 shows that two bipolar transistors are used in an RC-coupled limiter strip, followed by a diode discriminator. RFC1 and RFC2 are used to prevent vhf parasitics. Two Amidon ferrite beads are used for each choke. Alternatively, a 22-ohm 1/2-watt resistor can be substituted for each choke. It can be seen that here, again, the npn transistors are connected in the circuit for a *positive* ground system. Type 2N4126 transistors can be substituted if one wishes to use this assembly with receivers that have a negative ground.

Diodes CR1 and CR2 function in a self-adjusting limiter arrangement. They can be omitted if the bc set used ahead of the limiter board is low

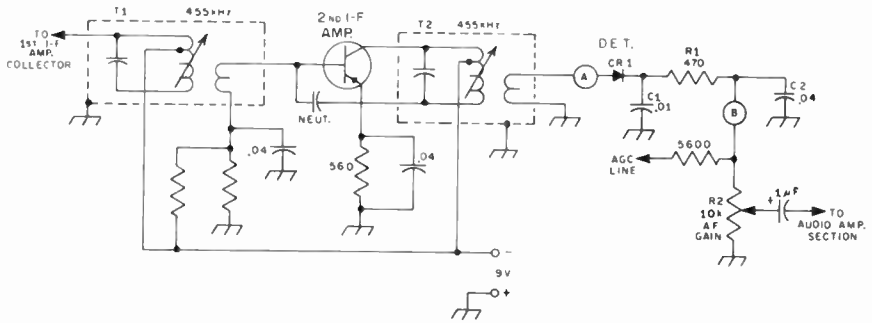

Fig. 10-46 — Typical circuit of second i-f amplifier and a-m detector of imported bc-band radios. Points marked A and B indicate where circuit is opened for addition of the limiter/discriminator. Components between points A and B are discarded. R2 is replaced by a panel-accessible gain control (see text). Values for R1, C1 and C2 are not necessarily the same in all imported sets.

Fig. 10-47 — Schematic diagram of the limiter/discriminator. Capacitors are disk ceramic. Larger values are low-voltage types. Resistors are 1/4- or 1/2-watt carbon. Parts not listed below are numbered for pc-board layout.

CR1, CR2 — 1N34A germanium diode.

CR3, CR4 — Matched set of germanium diodes (Sylvania 1N35 matched pair available from Allied Electronics. Also, see text).

Q1, Q2 — RCA 40235 or 40637. Motorola 2N4124 suitable.

RFC1, RFC2 — Two Amidon ferrite beads (see text).

RFC3 — 2.5-mH choke (James Millen J302-2500 miniature or equiv.).

T1 — 455-kHz discriminator transformer (J. W. Miller 8806).

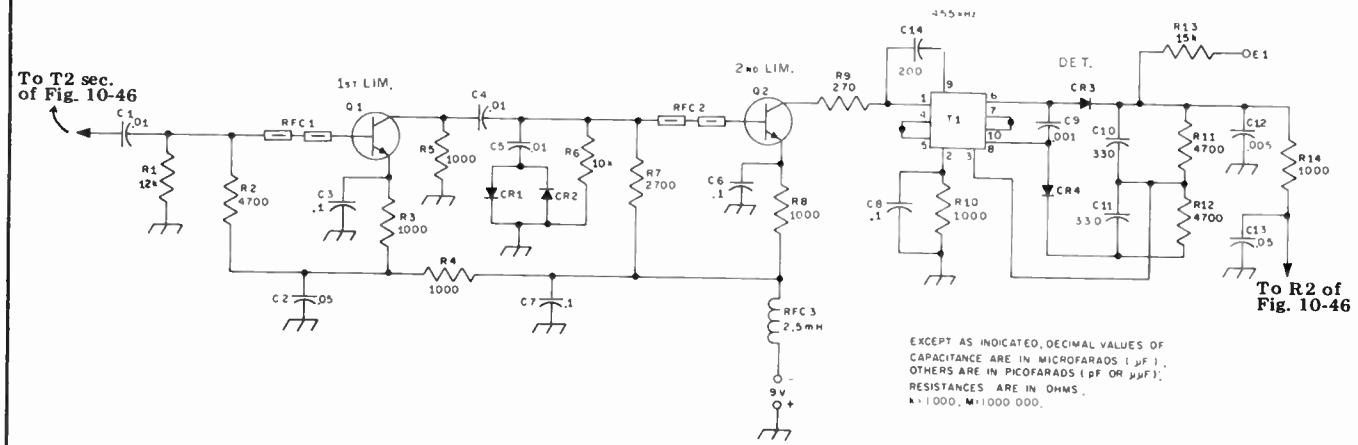

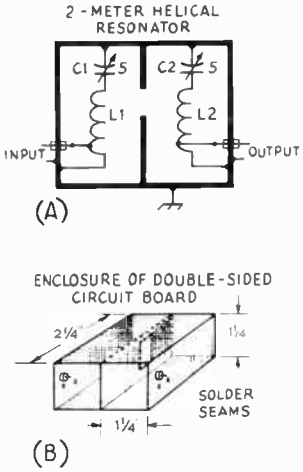

Fig. 10-48 — Circuit of the helical resonator. Double-sided pc board is used for the box walls, and is soldered along each seam by means of a pencil-type iron. E. F. Johnson silver-plated air-variable capacitors (No. 189-563) were used in this model, but high-dielectric piston trimmers can be substituted. Coils L1 and L2 consist of 4 1/2 turns of No. 12 copper wire, 3/4 inch in diameter, and 3/4 inch long. Each coil is centered in its compartment and tapped 1/4 turn from ground to obtain a bilateral 50-ohm impedance. A 3/8 X 5/8-inch aperature is cut in the center divider, and is opposite the second and third turns of each coil. C1 and C2 are tuned for peak signal response with the resonator connected between the receiver input and the feed line. The bottom end of the assembly need not be enclosed. Ideally, the enclosure should have no soldered seams, and both it and the coils should be silver plated. This suggests the use of large-diameter copper tubing for the outer shield if maximum Q is desired.

in i-f gain. Matched diodes should be used at CR3 and CR4. Those having an assortment of germanium diodes can select two that have nearly equal dc resistance readings (when checked with an ohmmeter). Match them in resistance in both the forward (low dc resistance) and reverse (high dc resistance) directions.

Terminal E1 of Fig. 10-47 provides a test voltage (dc) for aligning the discriminator. After alignment, those wishing to can connect a zero-center microammeter between E1 and ground for use as a tuning meter. Lafayette Radio sells a low-cost miniature meter for this purpose.

Assembling the MK-II

The photographs show that the MK-II is not a miniature unit. The writer likes to allow plenty of extra space in his projects, and this assembly is surely a case in point. A large portion of the cabinet has been reserved for a 2-watt fm transmitter. However, the builder can certainly shrink the 10 1/2 X 8 X 3-inch dimensions by a considerable margin if he is skilled at packing many parts into a small space. This enclosure is fashioned from 1/16-inch-thick aluminum stock. The panel is painted dark green.

To reduce unwanted pickup of bc stations, the pocket radio is enclosed in a box made from double-sided pc board. A press-fit U-shaped aluminum lid encloses the top of the compartment. The bandspread tuning capacitor and gain control are contained in the same box. No. 6 spade bolts hold the assembly to the main chassis.

Tune-up and Use

It is suggested that the builder test the bc set independently after it is modified and mounted in its shield box. The components which were removed between points A and B of Fig. 10-46 can be clipped between those points for the test. Connect a 9-volt battery and tune in a bc station. Make certain that the new volume control and tuning capacitor are functioning as intended. Adjust the trimmers on the tuning capacitor to assure tracking of the mixer and oscillator sections of the radio. Next, connect a signal generator to the base of the mixer through a 10-pF blocking capacitor. Set the generator for 455-kHz output and align the i-f transformers for peak response at that frequency.

The next step is to connect the limiter/discriminator board to the circuit in place of the components temporarily connected between points A and B. Attach a VTVM or zero-center μA meter between E1 and ground (Fig. 10-47). If a VTVM is used, set it for the 1.5-volt scale and adjust the meter-set control so that the needle is exactly on zero. Now, apply a strong signal (several hundred μV) to the mixer input, using 1500 kHz as a test frequency. Vary the signal generator plus and minus 15 kHz while observing the meter. The signal should swing plus and minus in a linear fashion. (If a VTVM is used for the test, it will be necessary to switch the polarity back and forth

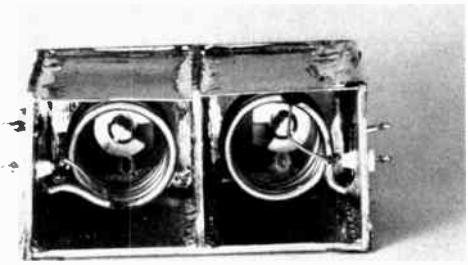

Fig. 10-49 — View of the homemade helical resonator shown in Fig. 14-66. Double-sided pc board is used for all walls but the top one in this version. Flashing copper was used for the top surface in this model, but pc board would have been suitable.

with the meter reversing switch.) The meter should return to zero when no signal is present. If the foregoing conditions are not met it will be necessary to adjust T1 of Fig. 10-47 for a linear response. The alignment of T1 will be a tedious task, so plan to spend some time in the adjustment process. Alternately tweak the pink and blue cores of the transformer, a few degrees of rotation each time, then sweep across the 30-kHz range and observe the meter response. Try various settings of the cores until proper alignment is achieved. If a signal generator is not available, tune across a *strong* bc station and adjust T1 for linear response of the discriminator. After T1 is correctly adjusted, there should be no a-m detection of the bc signal when the station is tuned in to its center frequency. Readable audio will be heard, however, when tuning to either side of center frequency.

Install the bc set and the limiter/discriminator assembly in the chassis. Next, connect the 2-meter converter to the circuit. Tune in a weak 2-meter fm signal, or use the output from a vhf signal generator. Adjust L8 and C16 of Fig. 10-44 for maximum signal response at 146.8 MHz. Spread or compress the turns of L2, L3 and L4 for peak response. Use an insulated rod while making these tests. This completes the adjustments. The converter can now be bolted in place in the cabinet.

Since the MK-II represents one of the least sophisticated approaches to fm reception, some ills may become manifest. Strong signals from nearby two-way commercial services may show up in the tuning range of the receiver. Also, signals from the lower portion of the 2-meter band may appear as images. The helical-resonator filter shown in Fig. 10-48 can be built and used ahead of the receiver to reduce or eliminate unwanted responses. FL1 is easy to assemble and is very inexpensive, yet is superior in performance to most strip-line filters. Design data for these filters are given in *ITT Reference Data for Radio Engineers*, 5th Edition, Chapter 22. The filter consists of two very high-*Q* tuned circuits, coupled through a small aperture in the metal wall between them. Input and output taps are set for a 50-ohm impedance.

AN FM TRANSMITTER FOR 2 METERS

Whether you're a would-be fm-er, or a person who has already explored the world of fm and repeaters, this little 2-watt solid-state transmitter can be the key to new operating enjoyment. No need to scoff at the QRP aspect of this project, because here we have a piece of gear that can be operated from the 12-volt automotive system, a dry-battery pack (10 size-D flashlight batteries in series, or a 12-volt lantern battery), or a simple ac-operated 12-volt dc supply. This feature makes possible a variety of amateur applications, and noteworthy among them, emergency/portable operation.

Rf Circuit

Four low-cost bipolar transistors are used in the circuit of Fig. 10-51. Q1 is the oscillator, which uses 18-MHz fundamental crystals ground for a load capacitance of 20 pF. Output from the first stage is taken at 73 MHz, a frequency multiplication of 4. The second stage, Q2, doubles the frequency to 146 MHz. The remaining stages operate as amplifiers at 146 MHz.

Frequency modulation is effected by applying audio to voltage-variable diode (Varicap) CR1. As the amplitude of the audio varies, the junction capacitance of CR1 changes, and this change pulls the crystal frequency above and below its preset frequency to provide fm. The amount of deviation, or swing, is determined by the audio level impressed across CR1. Normally, this will be set for 5- or 15-kHz deviation, depending upon the bandwidth in vogue for a given area. Approximately 1.5 volts of reverse bias is developed within the circuit and appears across CR1. This eliminates the need to provide back bias from the 12-volt line.

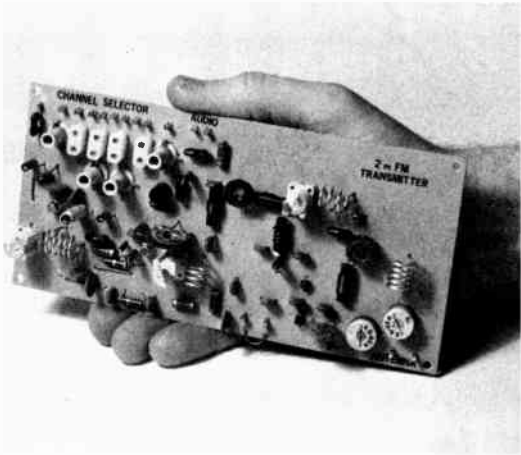

Fig. 10-50 — Top view of the rf module showing its relative size. The crystal sockets and Vector push-in terminals for connection to the crystal switch are at the upper left. The coils near the crystal sockets are for adjusting the crystals to frequency. The oscillator is at the lower left, and the PA stage is at the far right. The small loop of wire at the lower center is a B-plus jumper.

Crystals Y1 through Y4 are adjusted to the desired frequency by means of inductors L1 through L4. Approximately 1 kHz of shift is possible with the coil value given. If greater overall control of the frequency is desired, simply replace fixed-value capacitor C27 with an air trimmer of 30-pF maximum capacitance. Regulated voltage is supplied to Q1 (and to the bias line of Q2) by

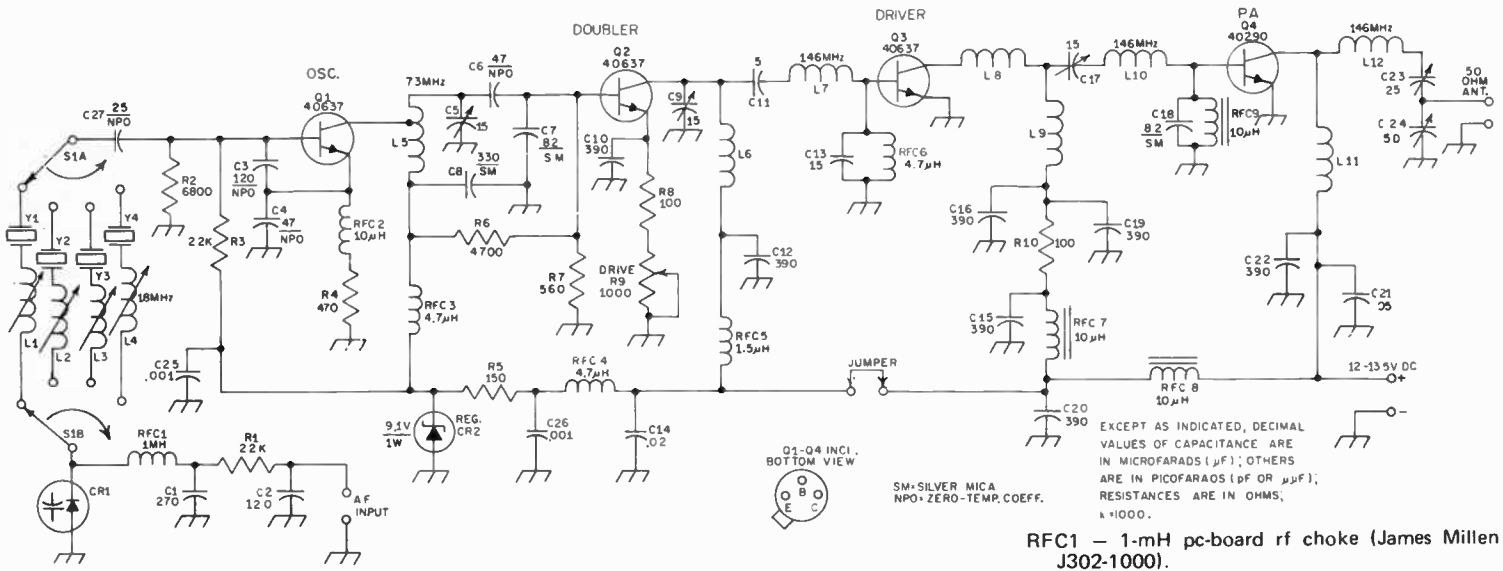

Fig. 10-51 — Schematic diagram of the rf section of the transmitter. Most of the parts are available from Allied Electronics (Catalog No. 710), Chicago, IL. Numbered components are not given in the parts list are so labeled for circuit-board identification. Fixed-value capacitors are disk ceramic unless noted differently. Fixed-value resistors are 1/2-watt carbon.

CR1 — Varicap diode, 82-pF nominal capacitance, 73.8 to 90.2 pF total range (Motorola MV839 or nearest equiv.).

CR2 — Zener regulator diode (Motorola HEP-104 or equivalent).

C5, C9, C17 — 1.7 to 14.1-pF pc-type air variable (Johnson 189-505-5). Compression trimmers or ceramic padders can be substituted.

C23, C24 — Phenolic-base ceramic padder (Erie type 557 or equiv.) Cut off pheonolic flange.

C3, C4, C6, C27 — NPO disk (Sprague from Allied Electronics).

L1-L4, incl. — Pc-board variable inductor, 0.68-μH nominal (J. W. Miller 46A687CPC. J. W. Miller Co., 19070 Reyes Ave., Compton, CA 90221. Catalog available).

L5 — 5 turns No. 16 bus wire, 5/16-in ID X 5/8 in. long. Tap 1 1/2 turns from C5 end (0.11 μH).

L6, L10 — 3 turns No. 16 bus wire, 5/16-in. ID X 1/2 in. long (.075 μH).

L7, L8 — 6 turns No. 22 enam., close-wound, 3/16 in. dia See text.

L9 — 4 turns No. 22 enam., 3/16-in. dia., spaced to occupy 3/8 inch on form (.06 μH).

L11 — 12 turns No. 22 enam., close-wound, 3/16-in. dia (0.435 μH).

L12 — 5 turns No. 16 bus wire, 5/16-in ID X 1/2 in. long (0.14 μH).

Q1-Q4, incl. — RCA bipolar transistor. Substitutes should have equal or higher voltage, wattage and f_T ratings.

R9 — 1000-ohm linear-taper pc-board carbon control (IRC type X-201, R102B or equiv.).

RFC1 — 1-mH pc-board rf choke (James Millen J302-1000).

RFC2 — 10-μH molded rf choke (J. W. Miller 9310-36). See text.

RFC3, RFC4, RFC6 — 4.7-μH molded rf choke (J. W. Miller 9310-28). See text.

RFC5 — 1.5-μH molded rf choke (J. W. Miller 9310-16). See text.

RFC7-RFC9, incl. — 10-μH low-*Q* rf choke. 4 turns No. 30 enam. wound on Amidon miniature ferrite bead (Amidon Assoc., 12033 Otsego St., N. Hollywood, CA 91607).

S1 — 2-pole, 4-position nonshorting phenolic or ceramic rotary switch.

Y1-Y4, incl. — 18-MHz fundamental crystal cut for 20-pF load capacitance. International Crystal Co., .0025 percent commercial standard, FI-4 holder. High-accuracy .002-percent type preferred for best stability. FI-4 pc-board sockets used in this transmitter. Crystals from other manufacturers may work satisfactorily if ground for 20-pF load. (International Crystal Mfg., Inc., 10 North Lee, Oklahoma City, OK 73102.)

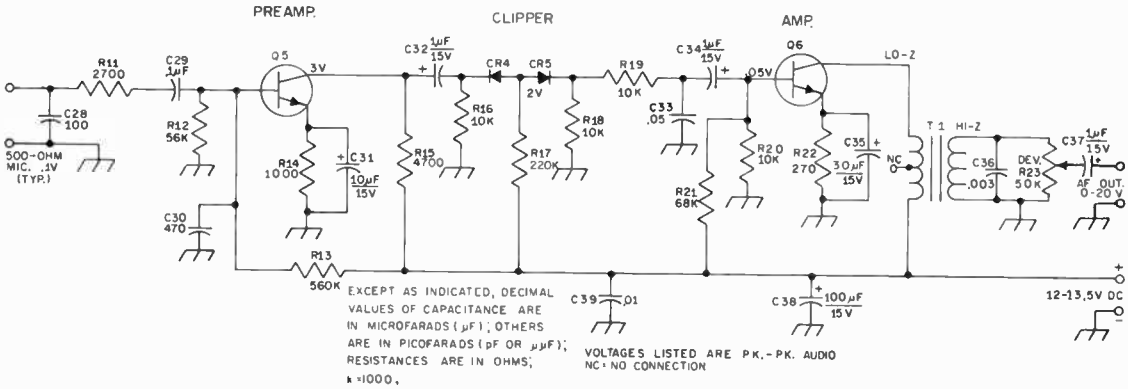

Fig. 10-52 — Schematic diagram of the clipper/modulator. Numbered components not listed below are for circuit-board identification. Capacitors are disk ceramic or paper. Polarized capacitors are electrolytic. Fixed-value resistors are 1/2-watt carbon.

CR4, CR5 — Silicon diode. 1N914 or top-hat rectifier suitable.

Q5, Q6 — Audio-type npn bipolar transistor. RCA 40231 or equiv. Also, Motorola 2N4123 or MPS-A10 suitable.

R11 — See text.

R23 — 50,000-ohm linear-taper carbon control. Pc-board type IRC X-201, R503B.

T1 — Miniature audio transformer, 10,000-ohm pri., 2000-ohm sec., c.t. not used. Radio Shack/Archer 273-1378 or equiv. Connect low-Z winding to Q6 collector.

means of Zener diode CR2. This measure helps insure against oscillator instability.

A drive control, R9, is connected in the emitter lead of Q2 to permit the operator to reduce power to the minimum amount needed. This measure helps to prolong the life of dry batteries during portable operation.

The Modulator

Only a few peak-to-peak volts of audio are needed to provide fm. A two-stage audio channel is shown in Fig. 10-52. This circuit amplifies the microphone output to a suitable level for clipping at diodes CR3 and CR4. A small amount of forward bias is used on the diodes to permit clipping action at relatively low audio level. The 10,000-ohm resistor and .05-µF capacitor used after the clipper diodes serve as a filter to reduce the harmonics caused during clipping. Output stage Q6 amplifies the clipped audio to a maximum level of 20 volts peak to peak. The deviation control, R23, is adjusted to provide the amount of frequency swing needed. A value of approximately 3 volts pk-pk is typical for 5-kHz deviation with the circuit of Fig. 10-51.

Construction Data

If you have built a commercial kit, you can assemble this transmitter easily. Circuit-board templates for the transmitter and modulator are available from ARRL for 50 cents and a *large* self-addressed, stamped envelope. A parts-placement overlay is included in the package.

Some of the inductors are wound on 1/4-inch diameter phenolic rod. Any low-loss rod material (Plexiglas or polystyrene) can be used, or, the coils can be wound on a 1/4-inch form, slipped off, and used as air-wound inductors. If this is done, put a drop of coil dope on each inductor to hold the turns in place. The large air-wound coils can be wound over a drill bit of appropriate size. Ferrite beads are used as cores for chokes RFC7, 8 and 9. Each choke has four turns of No. 30 enameled wire looped through its ferrite bead. The chokes, after being installed on the circuit board, are glued in place with china cement.

Glass-epoxy circuit board is recommended for the rf module. Low-cost phenolic board is suitable for the modulator. Poor-quality circuit board can cause problems in the rf module.

Heat sinks should be used on transistors Q3 and Q4. Small clip-on types are suitable. Wakefield Engineering Co. makes a wide variety of these devices. They are listed in most mail-order catalogs. Alternatively, homemade sinks can be made from 16-guage aluminum or brass stock.

The transmitter can be housed in any metal box that suits the builder's fancy. The transmitter board measures 3 X 7 1/2 inches. The modulator dimensions are 1 3/4 X 4 1/2 inches.

Tune-up

Connect the modulator output to the audio input terminals on the transmitter board. Use shielded audio cable or small-diameter coax. Attach a No. 47 pilot lamp across the transmitter output jack. This will serve as a visual-indicator dummy load of approximately 50-ohms impedance. Adjust the drive control to nearly full resistance (low power). Plug in a crystal and apply +12 volts to the B-plus terminal of the transmitter module (negative lead to ground foil). Couple a wavemeter to L5 and adjust C5 for a maximum reading at 73 MHz.

The next step is to set the wavemeter for 146 MHz and couple it to tank coil L6. Tune C9 for maximum output indication. The same technique

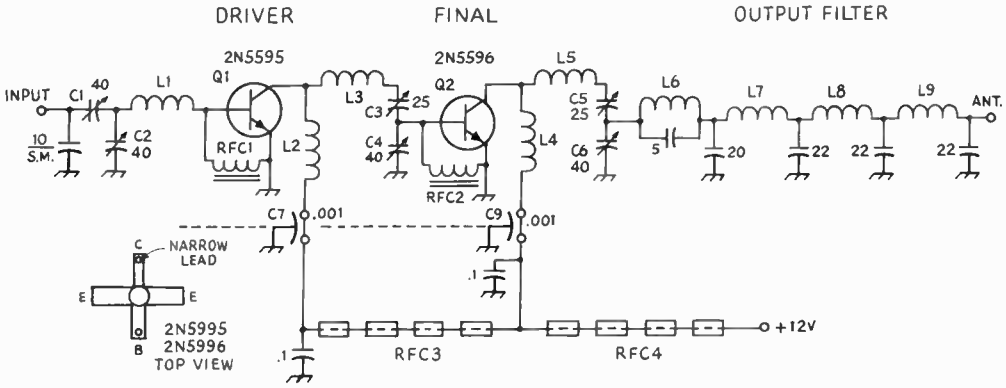

Fig. 10-53 — Schematic diagram of the 25-watt solid-state amplifier. Capacitors are disk ceramic unless otherwise noted.
C1, C2, C4, C6 — Compression trimmer.
C3, C5 — Air variable.
C7, C8 — Feedthrough type.
L1 — 1/4 X 2/3-inch copper strap.
L2, L4 — 9 turns No. 20 enam., closewound, 3/16-inch dia.
L3, L5 — 3 turns No. 14 tinned bus wire, 3/8-inch ID X 1/2-inch long.
L6 — 2 turns No. 20 enam., closewound, 1/4-inch dia.
L7-L9, incl. — 3 turns No. 20 enam., closewound, 1/4-inch dia.
Q1, Q2 — RCA power semiconductor, used with appropriate heat sink.
RFC1, RFC2 — 4 turns No. 30 enam. wound on a single ferrite bead (turns looped through the bead).
RFC3, RFC4 — Four ferrite beads on a 1/2-inch length of No. 20 wire.

is used to adjust the tuned circuits of Q3 and Q4. Now, advance the drive control to obtain maximum power. The dummy load should light at this point. Retune each stage for maximum lamp brilliance. Alternately adjust the tune and load trimmers, C23 and C24, for maximum glow of the lamp. Normal operation should cause the lamp to light to full brightness or slightly more. At 13.5 volts one should be able to obtain above-normal lamp brilliance. Couple a wavemeter to the output tank and check for second-harmonic energy. Choose a setting for C23 and C24 that provides maximum rf output at 146 MHz with the lowest possible reading at the second harmonic. The wavemeter response at 293 MHz should be very low, but some energy will be present.

Modulator Checkout

The circuit of Fig. 10-52 is designed for a low-impedance dynamic microphone (500 to 1000 ohms). If a high-impedance microphone is to be used, replace R11 with a 100,000-ohm unit. This will reduce the audio drive to Q5, thus preventing saturation of that stage. Also, the high-value resistor will give the high-impedance microphone a more suitable impedance to look into. Adjust R23 for the amount of deviation required. This can be done best by checking with another amateur who has an fm receiver of the desired bandwidth. The crystal can be rubbered to the desired frequency by adjusting its series inductor.

A final word of caution: *Never operate this transmitter into a highly-reactive load.* The SWR should be no higher than 2:1 to prevent damage to PA stage Q4. The output circuit of Q4 is designed to work into a 50- to 75-ohm load.

Suitable substitutes for Q1, Q2, and Q3 are 2N4427 and 2N3866. A new RCA device, the 2N5913, is recommended as a substitute for Q4. In fact, this type was tried in the circuit of Fig. 10-51 and performed superbly.

2-Meter Solid-State Amplifier

The circuit of Fig. 10-53 was developed for use with the new RCA 2N5995 and 2N5996 npn overlay rf power transistors. Both units are identical in appearance. Low-inductance radial-type leads are used for the base, emitter, and collector connections. The mounting stud is independent from the transistor elements. This ideal feature makes it possible to bolt the transistor to the wall of the equipment case, thus using the cabinet or chassis as a heat sink.

Both transistors are "mismatch tested" by the manufacturer. This means that an infinite load mismatch from short to open can be tolerated by the transistors during driven periods, provided the maximum junction temperature is not exceeded. The circuit shown here was tested for both short and open conditions, and no damage to the transistor resulted.

Driving power for the 2N5995 is 3/4 watt. The 2N5996 requires approximately 5-watts drive to develop its rated power output. The 2N5995 can be used as a driver for the 2N5996 to obtain approximately 20-watts output at 146 MHz. Similar circuit constants can be used for both stages.

A PORTABLE TRANSCEIVER FOR 144 MHz

Fig. 10-54 — The 2-meter transceiver is housed in a legal-bond box. A homemade dial-calibration chart for the receiver is pasted on the inside of the lid. Two plastic cable clamps serve as holders for the two-section 1/4-wavelength whip antenna (inside lid) when the unit is not in use. The antenna is held together at the center by a homemade 1/4-inch diameter threaded coupling.

Here's a vhf transceiver that's truly portable, is easy to build, and is capable of spanning many miles when used with a good antenna. It can be operated from its internal 12-volt flashlight-cell pack, from the cigar lighter of any 12-volt negative-ground car, or from an ac-operated 12-volt dc pack. The transmitter and the two-stage FET superregenerative receiver are assembled on etched circuit boards to simplify construction. The audio section is a prewired "import" – also on a circuit board. (From *QST*, August 1968.)

Receiver-Section Circuit

Two FETs are used in the simple receiver circuit of Fig. 10-56. A JFET (junction field-effect transistor), Q4, operates as a common-gate rf amplifier and offers a fair amount of detector isolation while providing a few decibels of gain. Its output is coupled to the detector, Q5, through C19, which is a "gimmick" capacitor. The latter consists of three turns of insulated hookup wire wrapped around the ground end of L8. The opposite end of the wire is soldered to the drain end of L7. A junction-type FET is used at Q4 to make it less subject to rf burnout than would be the case if an IGFET (insulated-gate FET) were used.

An IGFET is used as the detector, Q5. Since it is isolated from the antenna circuit there is little chance of its being harmed by strong rf fields.

Quench-frequency voltage is provided by R14 and C26 in the source lead of Q5. Feedback for the detector is between gate and source, making it necessary to keep the source above rf ground by means of RFC4.

Af output from the detector is taken from the drain through a quench-frequency filter consisting of C24, C25, RFC5 and C27. The filter prevents the quench voltage from reaching the audio amplifier. L9 isolates the af signal from the B-plus line, and R15 varies the drain-supply voltage to control superregeneration. R16 is the af gain control.

A word of caution at this point: When soldering the IGFET, Q5, into the circuit, be sure to connect a clip lead between the tip of the soldering iron and a good earth ground. This will help prevent damage to the gate of the 3N128 should static charges be present. Also, *do not handle* the leads of Q5. The leads should be removed from their shorting collar by means of a non-plastic or nonmetallic tool. A wooden toothpick is recommended for this, and for spreading the leads apart. Once Q5 is soldered in place, it should be quite safe from static-charge damage.

Transmitter Circuit

Referring again to Fig. 10-56, the transmitter section starts out with a Colpitts oscillator, Q1, which uses 72-MHz overtone crystals. C1 and the internal base-emitter capacitance of Q1 control the feedback. RFC1 keeps the emitter above rf ground. Bandpass coupling is used between Q1 and Q2 to reduce harmonics in the driving signal to Q2. A capacitive divider, C5 and C6, is used to match the collector of Q1 to the low base impedance of Q2. The high value of capacitance between the base of Q2 (C6) and ground helps to further reduce harmonic energy in that part of the circuit. Both Q1 and Q2 are low-cost Motorola transistors designed for amplifier or oscillator use at frequencies up to 500 MHz. They have a beta spread of 20 to 200, and have a collector-dissipation rating of 500 milliwatts. Other transistors can be substituted provided they have similar specifications. Resistors R5 and R6 establish Class A bias for Q2, making it easier to drive with the low output of Q1.

An RCA 2N3512 is used in the power amplifier, Q3. It was selected because of its low cost ($1.08) and high maximum dissipation rating of 4 watts. It is designed for high-speed switching applications and has an f_T of 375 MHz. Its h_{FE} rating is approximately 10. The low h_{FE} makes it easier to stabilize than would be the case if a high-beta transistor were used. Other transistors can also be used at Q3; a 40290, an HEP-75, and a 2N3553 were tried and performed as well as the 2N3512, but are more costly. To assure good heat dissipation at Q3, a heat sink is clipped to the transistor body. A Wakefield Engineering NF205 costs 27 cents and is ideal.

A capacitive divider, C10 and C11, matches the output of Q2 to the base of Q3. C10 tunes L3 to resonance. Forward bias is used on the base of Q3 to establish Class AB conditions. This provided greater output from Q3 than resulted with Class-C

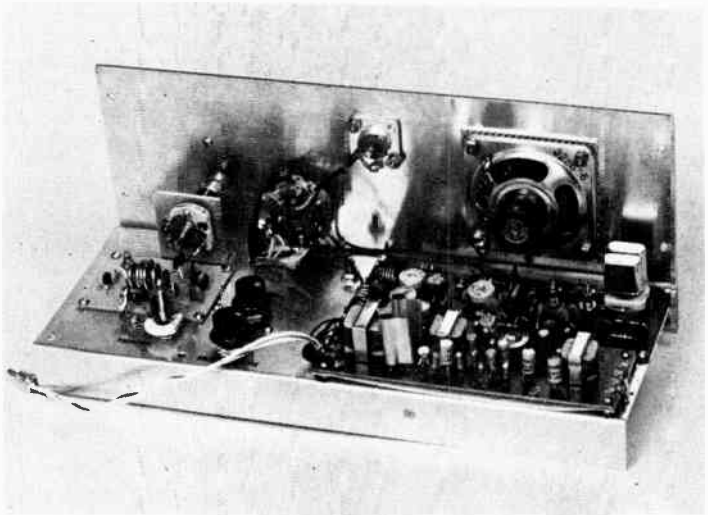

Fig. 10-55 — Top-chassis layout of the transceiver. The receiver section is at the left. Controls for regeneration and modulation are in the foreground near the center of the chassis. The audio module is at the lower right, and the transmitter board is near the panel, directly under the loudspeaker. The home-made heat sinks are visible at the left end of the audio board.

operation, as is usually the case when the driver stage has low output. The collector tank of Q3 is a combination *L* and pi network. The *L* network, C12 and L4, matches the load to the collector. The pi network is used for harmonic reduction, a necessary provision when clean output is desired from transistorized transmitters. C12 tunes the PA tank to resonance; C15 serves as a loading control.

In order to assure suitable stability, the power leads of the stages are decoupled by means of C3, C9 and C14 in combination with R4, R8 and R11. The three resistors also serve as current-limiting devices to protect Q1, Q2 and Q3.

The Audio Section

The audio channel, AR1, can be purchased for approximately $8.00. It has a 200-milliwatt output rating at 9 volts, but by increasing the operating voltage to 12, and adding heat sinks to the two output transistors, slightly more than 300 milliwatts of output are available. This was done in the circuit of Fig. 10-36.

AR1 has two input impedances – 50 ohms and 100,000 ohms. Two output impedances are available, providing a 500-ohm transformer winding for modulator service, and an 8-ohm winding for driving a loudspeaker. The high-impedance input connects to the microphone gain control, R17, during transmit, and is switched to the receiver gain control, R16, during receive. The 50-ohm tap is not used.

Because the module is designed for a positive-ground bus (pnp transistors are used), it is necessary to "float" the entire assembly above chassis ground to prevent short-circuiting the power supply. Information on the mounting techniques and some modifications to the board are given later.

Building the Transceiver

The packaging of this circuit can be up to the builder. In this instance a standard legal-bond box was chosen. It measures 5 X 6 X 11 1/2 inches.

The chassis and panel are made from 16-gauge aluminum sheeting. An aluminum cookie tin from a hardware store can be the source of the panel and chassis stock. Many are made of heavy-gauge material and are large enough to assure that there will be excess stock. The chassis measures 11 1/4 X 4 X 1 inch. The panel is 11 1/4 inches by 4 3/4 inches. After the panel holes are drilled, a coating of zinc chromate should be sprayed on it. Then, after thorough drying, a coat of spray-can enamel or lacquer can be added for the final touch. The zinc chromate helps the finish coat of paint adhere to the aluminum sheeting.

The receiver and transmitter are built on etched circuit boards, but point-to-point wiring could be used if done neatly and with short connections. Etched-circuit templates are available from the ARRL if desired.[1] They are to scale and show where the various parts are mounted.

AR1 is insulated from the main chassis to prevent short-circuiting the power supply. It has a plus-ground bus; the rest of the transceiver circuit uses a negative ground. A piece of cardboard is mounted between the circuit board and the chassis to prevent accidental contact between AR1 and the chassis. AR1 is bolted to the chassis at four points. The four mounting holes in the main chassis contain small rubber grommets, each serving as an insulator. Terminals 1 and 9 of the audio board are common to its plus-ground bus. These terminals must be disconnected from the ground bus by removing the thin copper connecting strip which joins the circuits. A pocket knife works nicely for this job; the copper can then be peeled off.

To operate AR1 at 12 volts it is necessary to add heat sinks to the two transistors nearest the output transformer. The sinks can be fashioned from pieces of thin brass, copper, or aluminum. They are 1 1/2 inches long and each is formed by

[1] Scale circuit-board templates and parts placement guide are available from ARRL for 25 cents and an s.a.s.e.

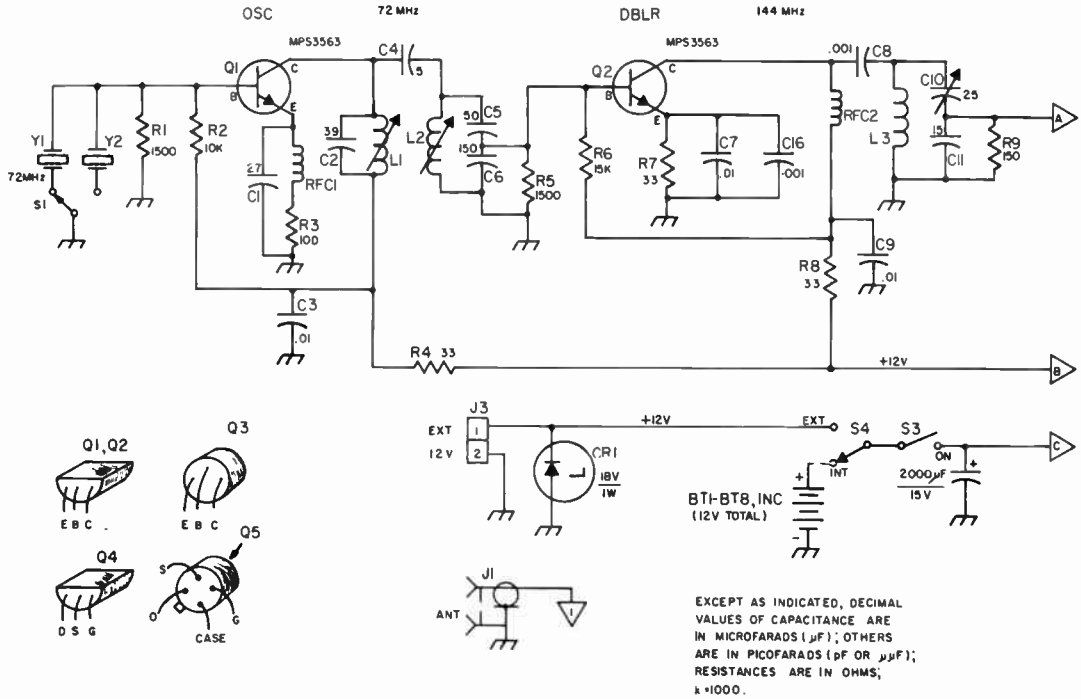

Fig. 10-56 — Schematic of the 2-meter transceiver. Fixed-value capacitors are disk ceramic except those with polarity marking, which are electrolytic. Resistors are 1/2-watt composition. Component numbering is for identification of parts on the circuit-board templates. Significant parts are listed below in the usual manner.

AR1 — 200-milliwatt audio module (Round Hill Associates Model AA-100*).

BT1-BT8, incl. — Eight 1.5-volt size-D flashlight cells, series-connected and mounted inside box by means of four Keystone No. 176 dual-battery clips.

C10, C12 — 5- to 25-pF ceramic trimmer (Erie 822-CN or equiv). (Midget 3- to 30-pF mica trimmer also suitable.)

C15 — 8- to 50-pF ceramic trimmer (Erie 822-AN or equiv). (Midget 8- to 60-pF mica trimmer also suitable.)

C19 — Gimmick-type capacitor. See text.

C20 — 15-pF subminiature variable (E. F. Johnson 160-107).

C22 — 5-pF min. variable (Hammarlund MAPC-15B, all but one rotor and one stator plate removed).

CR1 — 18-volt 1-watt Zener diode (used for transient protection during mobile operation).

J1 — SO-239 coax fitting (chassis mount).

J2, J3 — Two-terminal single-contact audio connector (Amphenol 75PC1M or similar).

L1, L2 — 3 turns No. 22 enam. wire spaced to occupy 1/2 inch on 1/4-inch dia ceramic slug-tuned form (J. W. Miller 4500-4*).

L3 — 4 turns No. 20 bare wire, 1/2 inch long, 5/16 inch ID.

L4 — 6 turns No. 20 bare wire, 1/2 inch long 5/16 inch ID.

L5 — Same as L3.

L6 — 8 turns No. 20 bare wire, 1 inch long, 5/16 inch ID. Tap 5 turns from source lead of Q4.

L7 — 5 turns No. 22 enam. wire, close-wound on 1/4-inch dia ceramic slug-tuned form (J. W. Miller 45005).

L8 — 4 turns No. 10 bare copper wire, 1 inch long, 3/8-inch ID. (The tap shown is not a physical one; see text discussion of C19.)

L9 — Total primary winding of 500-ohm ct transistor output transformer. The 8-ohm secondary winding not used. (Argonne AR-164 or similar.)

R15-R17, incl. — 100,000-ohm audio-taper carbon control.

RFC1 — Miniature 50-µH choke (Millen 34300-50*).

RFC2-RFC4, incl. — Miniature 2.7-µH rf choke (Millen 34300-2.7).

RFC5 — Subminiature 10-mH rf choke (J. W. Miller 73F102AF).

S1, S4 — Spdt slide switch.

S2 — 4-pole 2-position phenolic single-section rotary wafer switch. (Mallory 3142J.)

S3 — Spst slide switch.

Y1, Y2 — 72-MHz overtone crystal (International Crystal Co. in HC-6/U holder*).

* Round Hill Assoc., Inc., 434 Sixth Ave., NY, NY 10011.
* J. W. Miller Co., 19070 Reyes Ave., Compton, CA 90221.
* International Crystal Co., 10 N. Lee St., Oklahoma City, OK 73102.
* James Millen Mfg. Co., 150 Exchange St., Malden, MA 02148.

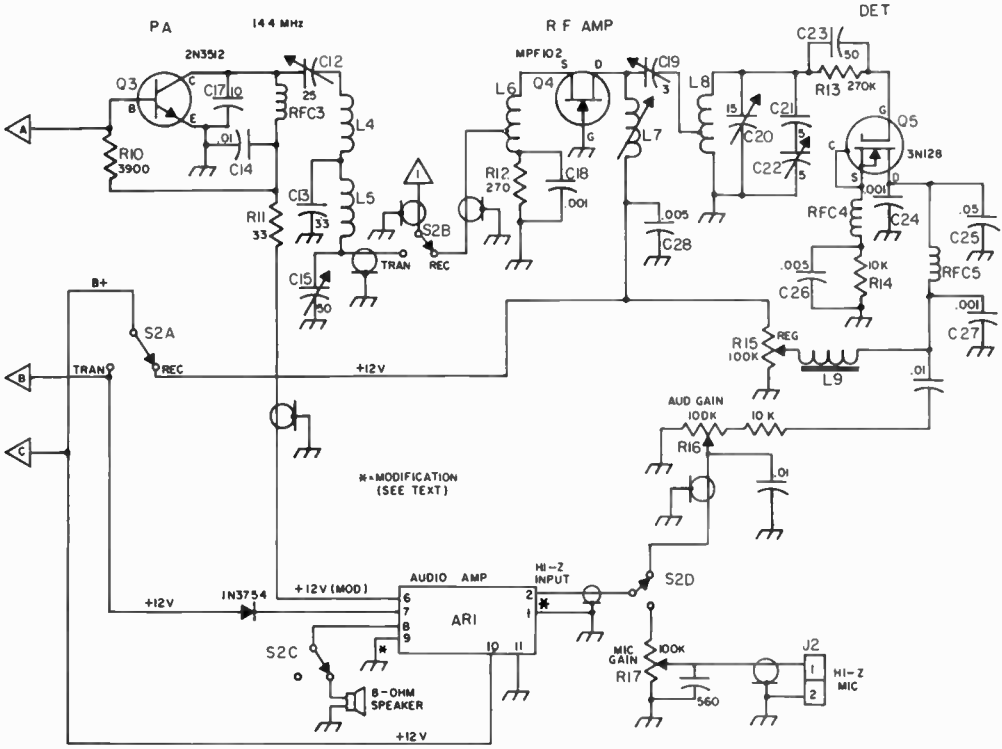

warping the stock around a drill bit which is slightly smaller in diameter than the body of the transistor.

All interconnecting rf leads are made with subminiature coax cable, RG-174/U (Belden 8216). Shielded audio cable should be used for all af wiring which is more than a couple of inches in length. A bargain-house import is used for the receiver tuning dial. No slippage was noted with the 2-inch-diameter model used here. The next smaller model is not recommended because it will not handle the torque of the tuning capacitor.

A 2 1/2-inch-diameter loudspeaker is used. Its protective grille can be made from perforated aluminum.

Two 3-inch-long brass angle brackets, each with 3/4-inch sides, are used as mounts for the panel-chassis assembly inside the box. Two 6-32 nuts are soldered to the bottom side of each bracket, directly under No. 10 access holes. Four

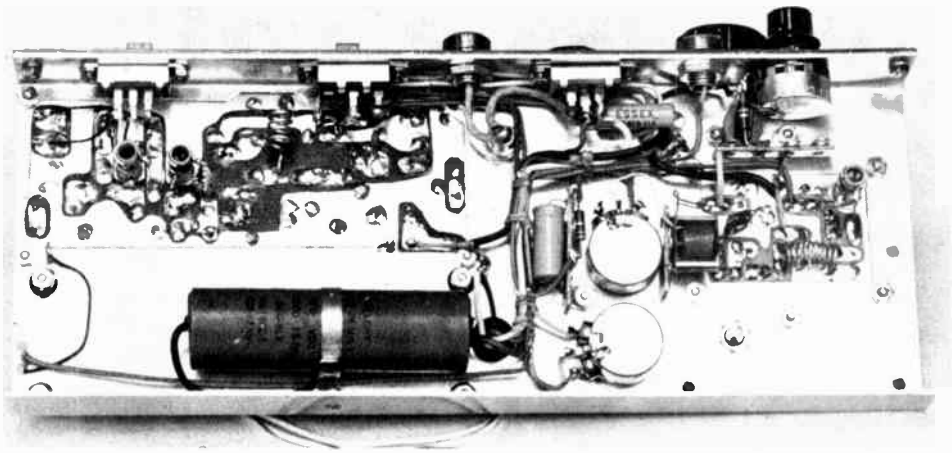

Fig. 10-57 — Bottom view of the chassis. The receiver board is at the right. The transmitter board is at the upper left. A 2000-μF 15-volt electrolytic is mounted near the rear lip of the chassis.

Fig. 10-58 — Details of the homemade heat sinks for AR1.

6-32 X 3/8-inch screws hold the transceiver in place. The brackets are attached to the sides of the box with 4-40 hardware.

Tune-Up and Use

The receiver should be tested first. With an antenna connected to J1, apply operating voltage and adjust R15 until a rushing noise is heard in the speaker. Do not advance R15 beyond this point as the sensitivity of the receiver will decrease. Next, tune in a weak signal from another ham station (or from a signal generator) and tune L7 for a peak response. Chances are that when the peak is reached, the detector will stop oscillating. If this happens, advance R15 until the hiss returns. If it does not, detune L7 slightly until a compromise is reached (L7 usually loads the detector somewhat when it is tuned to the operating frequency). Alternatively, a 1000-ohm swamping resistor can be connected across L7 to reduce its effect on the detector. Trimmer C20 is used to set the tuning range of C22. The turns of L8 can be spread or compressed for additional frequency adjustment. The receiver should tune the entire 4-MHz of the 2-meter band, or nearly so.

A No. 49 pilot lamp makes a suitable dummy load for visual tune-up of the transmitter, though somewhat reactive at 144 MHz. First, determine that the oscillator, Q1, is operating by coupling a wavemeter (or grid-dip meter in the diode-detector position) to L1 and look for an indication of output. Adjust the slug in L1 for maximum output, then turn the transmitter on and off a few times to make sure the crystal always kicks in. If not, detune L1 slightly toward the high-frequency side of resonance until the oscillator does start each time. Next, peak L2, C10, C12 and C15 for maximum indication on the bulb. There will be some interaction between the circuits, so the foregoing steps should be repeated a few times to assure maximum output. Final adjustments should be made with the antenna connected, and with an SWR indicator in the line.[2]

Fig. 10-59 — Eight size D cells are series connected to provide 12 volts. They are mounted in Keystone holders on the back wall of the bond box. The 1/4-inch diameter hole in the front of the cabinet (upper right of photo) permits final calibration of the receiver (C20) after the installation is completed. The hole is opposite the shaft of C20.

[2] A highly sensitive SWR indicator is needed at this power level. One of the Monimatch indicators with a 4-inch or longer line (air-dielectric element type) can provide full-scale readings if a 100-μA meter is installed. Alternatively, see *QST* August, 1967 for a low-power bridge. Also, see the "Monimatch Mark II," *QST*, February, 1957.

A QRP CONSOLE

It's handy to keep the station equipment neat and orderly, especially during portable or emergency operation. This QRP console is a fitting mate for the transceiver shown earlier in this chapter, and permits matching the transceiver output to almost any load, reactive or resistive in nature. The tuner portion will look into end-fed random or resonant wires, coax-fed antennas, or into antennas that use balanced feeders. Ideally, the antenna would be cut to a resonant length, but even with nonresonant antennas this tuner will disguise whatever SWR is present to give the transceiver the 50-ohm load it is designed to look into.

The Circuit

As shown in Fig. 2, the transceiver connects to J1 at low impedance (50 ohms). An SWR bridge is permanently in the low-impedance part of the line, and permits the operator to adjust the antenna tuner for zero reflected power, which will correspond to a 50-ohm termination at the output port of the bridge (junction of C6 and L1). The forward-power reading can be used when tuning up the transmitter portion of the transceiver.

The tuner consists of a pi-section tuned circuit whose inductor is tapped at 10 places to permit a variety of matching conditions on 80 and 40

meters. By using both C6 and C7 as a part of the matching network the pi-network configuration exists. By adjusting either C6 or C7 to minimum capacitance (approximately 15 pF with the plates completely unmeshed) an L-network tuner can be realized. By switching L2 in parallel with L1 the inductance is reduced. This will permit a vernier effect when working at the low-inductance end of the adjustments. Ideally, a rotary inductor would be used in place of the tapped coil, but sufficient flexibility exists with the circuit of Fig. 2 to match almost any impedance the operator will encounter.

Switch S4 permits the operator to select either a balanced or unbalanced output. In the balanced position S4 places T2, a 1:1 balun transformer, in the circuit to allow the use of balanced feeders (300-ohm folded dipole or similar). When S4 is thrown to the opposite position one can use a single-wire or coax-fed antenna by connecting the wire or feed line to J2.

This accessory box is designed to handle up to 10 watts of rf power. If greater power levels are anticipated, the variable capacitors should be replaced by units with more spacing between plates. Also, the primary winding of T1 will require modification, as will the bridge constants. The toroidal inductors will handle up to 25 or 30 watts safely.

Construction Information

The components are housed in a homemade aluminum box which is 7 inches wide, 5 1/2 inches deep, and 5 inches high. The construction technique used is two U-shaped channels which are held together by means of L brackets and No. 6 sheet-metal screws. Most of the parts are assembled on a circuit board, whose pattern is given in Fig. 1. The circuit board is spaced away from the bottom surface of the box a distance of 3/8 inch. Rubber grommets serve as spacers.

The QRP console is shown atop the QRP transceiver. These electrically compatible units have look-alike decor with green panels, white labels, and lye-bath finished aluminum covers. Kurz-Kasch 700 Series knobs are used on both pieces of gear (Catalog No. 112, Kurz-Kasch, Inc., Dayton, Ohio 45401).

Toroidal transformer T1 uses 60 turns of No. 30 enamel wire for its secondary. The primary winding consists of 2 turns of insulated hookup wire over the center area of the secondary winding, thus assuring symmetry. The 2-turn primary is necessary to assure adequate sensitivity at very low power levels. Full-scale meter deflection can be obtained with somewhat less than 1/2 watt output at zero reflected power.

Inductor L1 uses a toroid core which is considerably larger than those used at L2, T1 and T2. The larger core is not needed as far as power-handling capability or Q is concerned, but

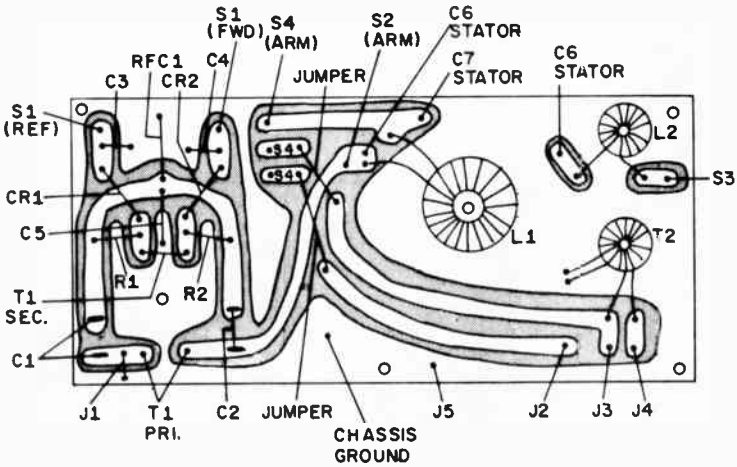

Fig. 1 — Half-scale drawing and parts layout of the circuit board.

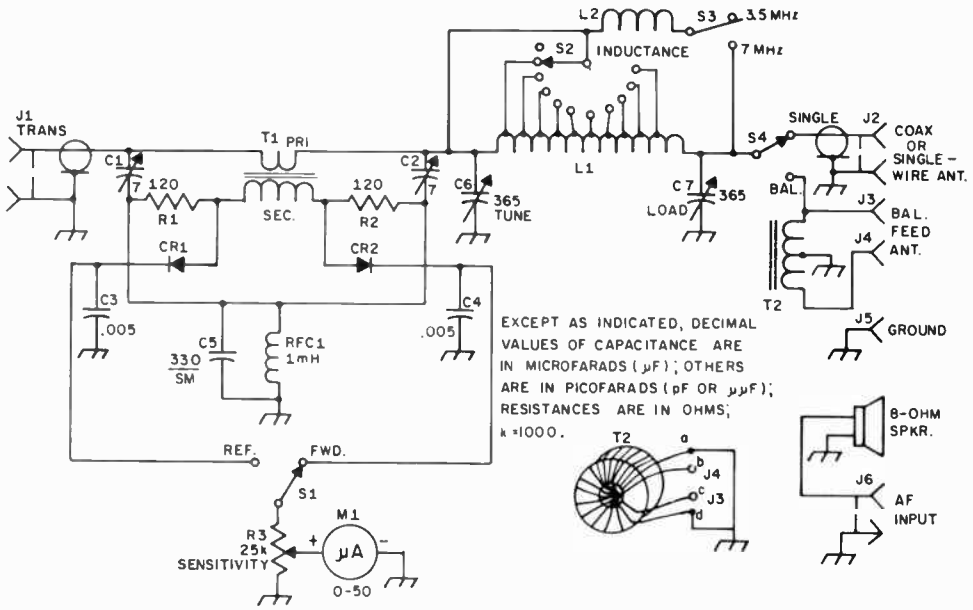

Fig. 2 — Schematic diagram of the QRP Console.

C1, C2 — 1.5 to 7-pF ceramic trimmer.
C3, C4 — Disk ceramic, 50-volt type.
C5 — Silver mica.
C6, C7 — Single-section variable (J. W. Miller Co. No. 2111 or equivalent. Address is 19070 Reyes Ave., Compton, CA 90221. Catalog available).
CR1, CR2 — 1N34A germanium diode.
J1, J2 — Coaxial connector, chassis-mount type.
J3, J4, J5 — Insulated binding post (E. F. Johnson type 111-101).
J6 — Phono connector, single-hole mount.
L1 — 38 turns No. 20 enameled wire on Amidon T-130-2 toroidal core. Space turns equally around entire core. Make first tap 4 turns in from C6, then tap at 7, 10, 13, 16, 19, 22, 26, 30 and 34 turns. Unloaded Q is 300. Inductance is 17 μH. (Amidon Associates, 12033 Otsego St., N. Hollywood, CA 91607.)
L2 — 44 turns No. 24 enam. wire, close-wound on Amidon T-68-2 toroidal core. Inductance is 15 μH, unloaded Q is 220.
M1 — Zero to 50-μA dc meter (Calectro No. D1-910 used here).
R1, R2 — 120-ohm, 1/2-watt composition resistor.
R3 — 25,000-ohm linear-taper composition control.
RFC1 — Miniature 1-mH rf choke (James Millen J300-1000 or similar).
S1, S3, S4 — Spdt slide switch.
S2 — Single-section, phenolic-wafer, single-pole 11-pos. rotary.
T1 — 60 turns No. 30 enam. wire, close-wound on Amidon T-68-2 toroidal core. Primary is two turns No. 24 enam. or insulated hookup wire over center portion of secondary.
T2 — See drawing and text.

the writer found that it was much less difficult to make the tap connections by using the larger core. The stout of heart may use the same core type specified for L2, but from a practical point of view it is not recommended.

Balun transformer T2 consists of 22 bifilar turns of No. 24 enameled wire. Wiring details are given in the pictorial inset of Fig. 2. One winding has its ends labeled "a." The ends of the remaining winding are marked "b."

Using the Console

Attach an antenna to the appropriate terminals on the rear of the tuner - single wire or coax-fed antenna to J2, or balanced-feeder antenna to J3 and J4. An earth ground should be attached to J5. Set C6 and C7 at maximum capacitance, and adjust S2 (S3 open) for maximum inductance (no turns shorted out). Attach the transceiver antenna lead to J1 by means of 50-ohm coaxial line. Set S1 to read REF power. Adjust C6, C7, and S2, alternately, for a peak in received signal. This will get the tuner fairly close to resonance. Next, turn the transmitter on and adjust C6, C7, and S2 for a zero reading in reflected power. Now, switch S1 to read forward (FWD) power. Set R3 for a full-scale reading on M1. Then switch back to REF and tweak the tuner controls for minimum meter reading. Retune the transmitter for maximum power output. Be sure to readjust the tuner when changing frequency within the band. If S2 will not provide sufficient range for obtaining an SWR of 1, switch L2 into the circuit and repeat the tuning procedure. The adjustments are the same whether balanced feeders, coaxial line, or single-wire antennas are used.

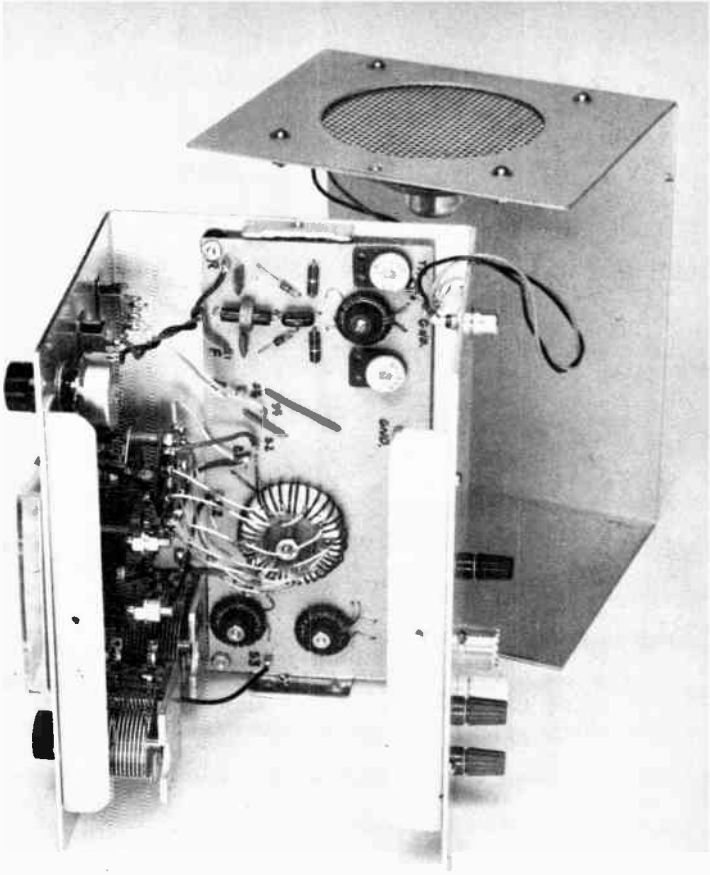

Looking into the console the SWR bridge is at the top end of the circuit board. The large toroid core, which has been wrapped with 3M Co. No. 27 glass tape (masking tape will suffice), is shown at the lower center of the board. The small toroid at the lower right is the balun transformer, and the small core to its left is the inductor which is used in parallel with the large core for 40-meter operation. The circuit board is spaced away from the bottom of the box by means of rubber grommets.

Final Comments

The SWR bridge should be nulled before the remainder of the console is built. This can be done by placing a 2-watt, 51-ohm resistor between the top connection of C2 (Fig. 2) and chassis ground. Apply transmitter power, set S1 to REF, and adjust R3 to give maximum meter sensitivity. Adjust C1 for minimum meter reading. Next, connect the transmitter to the output side of the bridge, and connect the 51-ohm resistor across J1. Apply transmitter power and tune C2 for a null. Repeat the process once more, then finish assembling the console.

Those wishing to have a measure of safety for the output transistor of the transceiver can use the calibrating resistor as part of the tuner. It can be switched in parallel with C6 during initial adjustments of the tuner. This will provide the transmitter with a constant load until the tuner matches the antenna system to the transmitter output. The resistor can then be switched out of the circuit, and the tuner touched up again for zero reflected power. There is plenty of panel space for adding a switch for this function.

Code Transmission

Keying a transmitter properly involves much more than merely turning it on and off with a fast manually operated switch (the key). If the output is permitted to go from zero to full instantaneously (zero "rise" time), side frequencies, or key clicks, will be generated for many kilohertz either side of the transmitter frequency, at the instant the key is closed. Similarly, if the output drops from full to zero instantaneously (zero "decay" time), side frequencies will be generated at the instant of opening the key. The amplitude of the side-frequency energy decreases with the frequency separation from the transmitter frequency. To avoid key clicks and thus to comply with the FCC regulations covering spurious radiations, the transmitter output must be "shaped" to provide finite rise and decay times for the envelope. The longer the rise and decay times, the less will be the side-frequency energy and extent.

Since the FCC regulations require that " . . . the frequency of the emitted wave shall be as constant as the state of the art permits," there should be no appreciable change in the transmitter frequency while energy is being radiated. A *slow* change in frequency is called a frequency drift; it is usually the result of thermal effects on the oscillator. A *fast* frequency change, observable during each *dit* or *dah* of the transmission, is called a chirp. Chirp is usually caused by a nonconstant load on the oscillator or by dc voltage changes on the oscillator during the keying cycle. Chirp may or may not be accompanied by drift.

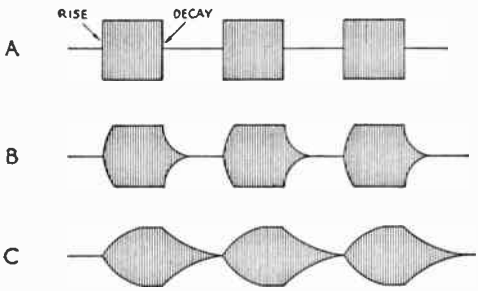

Fig. 11-1 — Typical oscilloscope displays of a code transmitter. The rectangular-shaped dots or dashes (A) have serious key clicks extending many kHz either side of the transmitter frequency. Using proper shaping circuits increases the rise and decay times to give signals with the envelope form of B. This signal would have practically no key clicks. Carrying the shaping process too far, as in C, results in a signal that is too "soft" and is not quite as easy to copy as B.

Oscilloscope displays of this type are obtained by coupling the transmitter rf to the vertical plates and using a slow sweep speed synchronized to the dot speed of an automatic key.

If the transmitter output is not reduced to zero when the key is up, a backwave (sometimes called a "spacing wave") will be radiated. A backwave is objectionable to the receiving operator if it is readily apparent; it makes the signal slightly harder to copy. However, a slight backwave, 40 dB or more below the key-down signal, will be discernible only when the signal-to-noise ratio is quite high. Some operators listening in the shack to their own signals and hearing a backwave think that the backwave can be heard on the air. It isn't necessarily so, and the best way to check is with an amateur a mile or so away. If he doesn't find the backwave objectionable on the S9+ signal, you can be sure that it won't be when the signal is weaker.

When any circuit carrying dc or ac is closed or opened, the small or large spark (depending upon the voltage and current) generates rf during the instant of make or break. This rf click covers a frequency range of many megahertz. When a transmitter is keyed, the spark at the key (and relay, if one is used) causes a click in the receiver. *This click has no effect on the transmitted signal.* Since it occurs at the same time that a click (if any) appears on the transmitter output, it must be eliminated if one is to listen critically to his own signal within the shack. A small rf filter is required at the contacts of the key (and relay); typical circuits and values are shown in Fig. 11-2. To check the effectiveness of the rf filter, listen on a band lower in frequency than the one the transmitter is tuned to, with a short receiving antenna and the receiver gain backed off.

What Transmitter Stage To Key

A satisfactory code signal, free from chirp and key clicks, can be amplified by a *linear* amplifier without affecting the keying characteristics in any way. If, however, the satisfactory signal is amplified by one or more nonlinear stages (e.g., a Class C multiplier or amplifier), the signal envelope will be modified. The rise and decay times will be decreased, possibly introducing significant key clicks that were not present on the signal before amplification. It is possible to compensate for the effect by using longer-than-normal rise and decay times in the excitation and letting the amplifier(s) modify the signal to an acceptable one.

Many two-, three- and even four-stage VFO-controlled transmitters are incapable of chirp-free output-amplifier keying because keying the output stage has an effect on the oscillator frequency and "pulls" it. Keying the amplifier presents a variable load to its driver stage, which in turn is felt as a variable load on the previous stage, and so on back

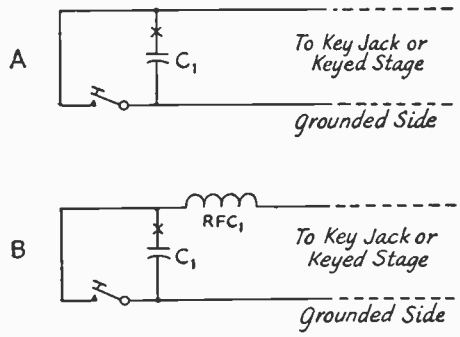

Fig. 11-2 — Typical filter circuits to apply at the key (and relay, if used) to minimize rf clicks. The simplest circuit (A) is a small capacitor mounted at the key. If this proves insufficient, an rf choke can be added to the ungrounded lead (B). The value of C1 is .001 to .01 μF; RFC1 can be 0.5 to 2.5 mH, with a current-carrying ability sufficient for the current in the keyed circuit. In difficult cases another small capacitor may be required on the other side of the rf choke. In all cases the rf filter should be mounted right at the key or relay terminals; sometimes the filter can be concealed under the key. When cathode or center-tap keying is used, the resistance of the rf choke or chokes will add cathode bias to the keyed stage, and in this case a high-current low-resistance choke may be required, or compensating reduction of the grid-leak bias (if it is used) may be needed. Shielded wire or coaxial cable makes a good keying lead.

A visible spark on "make" can often be reduced by the addition of a small (10 to 100 ohms) resistor in series with C1 (inserted at point "x"). Too high a value of resistance reduces the arc-suppressing effect on "break."

to the oscillator. Chances of pulling are especially high when the oscillator is on the same frequency as the keyed output stage, but frequency multiplication is no guarantee against pulling. Another source of reaction is the variation in oscillator supply voltage under keying conditions, but this can usually be handled by stabilizing the oscillator supply with a VR tube. If the objective is a completely chirp-free transmitter, the first step is to make sure that keying the amplifier stage (or stages) has no effect on the frequency. This can be checked by listening on the oscillator frequency while the amplifier stage is keyed. Listen for chirp on either side of zero beat, to eliminate the possibility of a chirpy receiver (caused by line-voltage changes or BFO pulling).

An amplifier can be keyed by any method that reduces the output to zero. Neutralized stages can be keyed in the cathode circuit, although where powers over 50 or 75 watts are involved it is often desirable to use a keying relay or vacuum tube keyer, to minimize the chances for electrical shock. Tube keying drops the supply voltages and adds cathode bias, points to be considered where maximum output is required. Blocked-grid keying is applicable to many neutralized stages, but it presents problems in high-powered amplifiers and requires a source of negative voltage. Output stages that aren't neutralized, such as many of the tetrodes and pentodes in widespread use, will usually leak a little and show some backwave regardless of how they are keyed. In a case like this it may be necessary to key two stages to eliminate backwave. They can be keyed in the cathodes, with blocked-grid keying, or in the screens. When screen keying is used, it is not always sufficient to reduce the screen voltage to zero; it may have to be taken to some negative value to bring the key-up plate current to zero, unless fixed negative control-grid bias is used. It should be apparent that where two stages are keyed, keying the earlier stage must have no effect on the oscillator frequency if completely chirp-free output is the goal.

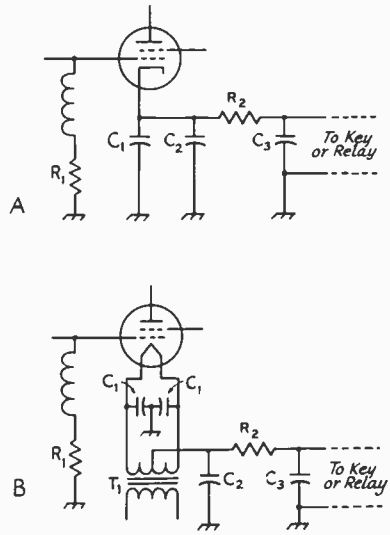

Fig. 11-3 — The basic cathode (A) and center-tap (B) keying circuits. In either case C1 is the rf return to ground, shunted by a larger capacitor, C2, for shaping. Voltage ratings at least equal to the cut-off voltage of the tube are required. T1 is the normal filament transformer. C1 and C3 can be about .01 μF.

The shaping of the signal is controlled by the values of R2 and C2. Increased capacitance at C2 will make the signal softer on break; increased resistance at R2 will make the signal softer on make.

Values at C2 will range from 0.5 to 10 μF, depending upon the tube type and operating conditions. The value of R2 will also vary with tube type and conditions, and may range from a few to one hundred ohms. When tetrodes or pentodes are keyed in this manner, a smaller value can sometimes be used at C2 if the screen-voltage supply is fixed and not obtained from the plate supply through a dropping resistor. If the resistor decreases the output (by adding too much cathode bias) the value of R1 should be reduced.

Oscillators keyed in the cathode can't be softened on break indefinitely by increasing the value of C2 because the grid-circuit time constant enters into the action.

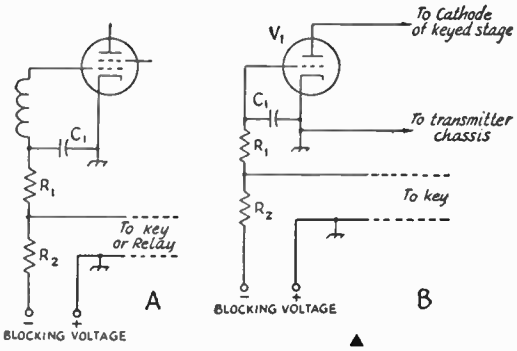

Fig. 11-4 — The basic circuit for blocked-grid keying is shown at A. R1 is the normal grid leak, and the blocking voltage must be at least several times the normal grid bias. The click on make can be reduced by making C1 larger, and the click on break can be reduced by making R2 larger. Usually the value of R2 will be 5 to 20 times the resistance of R1. The power supply current requirement depends upon the value of R2, since closing the key circuit places R2 across the blocking voltage supply.

An allied circuit is the vacuum-tube keyer of B. The tube V1 is connected in the cathode circuit of the stage to be keyed. The values of C1, R1 and R2 determine the keying envelope in the same way that they do for blocked-grid keying. Values to start with might be 0.47 megohm for R1, 4.7 megohms for R2 and .0047 μF for C1.

The blocking voltage supply must deliver several hundred volts, but the current drain is very low. A 6Y6 or other low plate-resistance tube is suitable for V1. To increase the current-carrying ability of a tube keyer, several tubes can be connected in parallel.

A vacuum-tube keyer adds cathode bias and drops the supply voltages to the keyed stage and will reduce the output of the stage. In oscillator keying it may be impossible to use a VT keyer without changing the oscillator dc grid return from ground to cathode.

Shaping of the keying is obtained in several ways. Vacuum-tube keyers, blocked-grid and cathode-keyed systems get suitable shaping with proper choice of resistor and capacitor values, while screen-grid keying can be shaped by using inductors or resistors and capacitors. Sample circuits are shown in Figs. 11-3, 11-4, and 11-5, together with instructions for their adjustment. There is no "best" adjustment, since this is a matter of personal preference and what you want your signal to sound like. Most operators seem to like the make to be heavier than the break. All of the circuits shown here are capable of a wide range of adjustment.

If the negative supply in a grid-block keyed stage fails, the tube will draw excessive key-up current. To protect against tube damage in this eventuality, an overload relay can be used or, more simply, a fast-acting fuse can be included in the cathode circuit.

Fig. 11-5 — When the driver-stage plate voltage is roughly the same as the screen voltage of a tetrode final amplifier, combined screen and driver keying is an excellent system. The envelope shaping is determined by the values of L1, C4, and R3, although the rf bypass capacitors C1, C2 and C3 also have a slight effect. R1 serves as an excitation control for the final amplifier, by controlling the screen voltage of the driver stage. If a triode driver is used, its plate voltage can be varied for excitation control.

The inductor L1 will not be too critical, and the secondary of a spare filament transformer can be used if a low-inductance choke is not available. The values of C4 and R3 will depend upon the inductance and the voltage and current levels, but good starting values are 0.1 μF and 50 ohms.

To minimize the possibility of electrical shock, it is recommended that a keying relay be used in this circuit, since both sides of the circuit are "hot." As in any transmitter, the signal will be chirp-free only if keying the driver stage has no effect on the oscillator frequency. (The Sigma 41FZ-35-ACS-SIL 6-volt ac relay is well-suited for keying applications.)

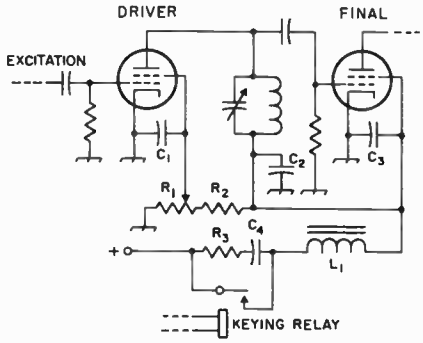

OSCILLATOR KEYING

One may wonder why oscillator keying hasn't been mentioned earlier, since it is widely used. A sad fact of life is that excellent oscillator keying is infinitely more difficult to obtain than is excellent amplifier keying. If the objective is no detectable chirp, it is probably *impossible* to obtain with oscillator keying, particularly on the higher frequencies. The reasons are simple. Any keyed-oscillator transmitter requires shaping at the oscillator, which involves changing the operating conditions of the oscillator over a significant period of time. The output of the oscillator doesn't rise to full value immediately so the drive on the following stage is changing, which in turn may reflect a variable load on the oscillator. No oscillator has been devised that has no change in frequency over its entire operating voltage range and with a changing load. Furthermore, the shaping of the keyed-oscillator envelope usually has to be exaggerated, because the following stages will tend to sharpen up the keying and introduce clicks unless they are operated as linear amplifiers.

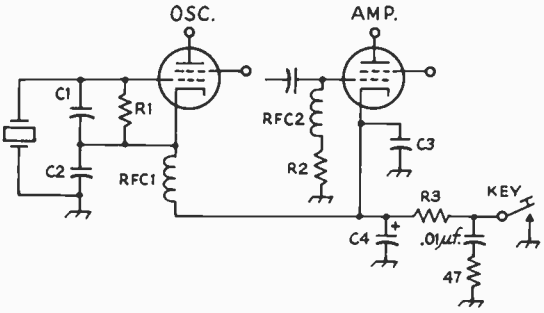

Fig. 11-6 — Simple differential-keying circuit for a crystal-controlled oscillator and power-amplifier transmitter.

Most simple crystal-controlled transmitters, commercial or home-built, return the oscillator grid-leak resistor, R1, to chassis, and "cathode keying" is used on the oscillator and amplifier stages. By returning the oscillator grid leak to the cathode, as shown here, negative power-supply-lead keying is used on the oscillator. A good crystal oscillator will operate with only 5 to 10 volts applied to it.

Using the above circuit, the signal is controlled by the shaping circuit, C4-R3. Increasing the value of R3 will make the signal "softer" on make; increasing the capacitance of C4 will make the signal softer on make and break. The oscillator will continue to operate after the amplifier has cut off, until the charge in C4 falls below the minimum operating voltage for the oscillator.

The .01-μF capacitor and 47-ohm resistor reduce the spark at the key contacts and minimize "key clicks" heard in the receiver and other nearby receivers. They *do not* control the key clicks associated with the signal miles away; these clicks are reduced by increasing the values of R3 and C4.

Since the oscillator may hold in between dots and dashes, a back wave may be present if the amplifier stage is not neutralized.

C1, C2 — Normal oscillator capacitors.
C3 — Amplifier rf cathode bypass capacitor.
C4 — Shaping capacitor, typically 1 to 10 μF, 250 volts, electrolytic
R1 — Oscillator grid leak; return to cathode instead of chassis ground.
R2 — Normal amplifier grid leak; no change.
R3 — Typically 47 to 100 ohms.
RFC1, RFC2 — As in transmitter, no change.

Break-in Keying

The usual argument for oscillator keying is that it permits break-in operation (see subsequent sections, also Chapter 23). If break-in operation is not contemplated and as near perfect keying as possible is the objective, then keying an amplifier or two by the methods outlined earlier is the solution. For operating convenience, an automatic transmitter "turner-onner" (see Campbell, *QST* Aug., 1956), which will turn on the power supplies and switch antenna relays and receiver muting devices, can be used. The station switches over to the complete "transmit" condition where the first dot is sent, and it holds in for a length of time dependent upon the setting of the delay. It is equivalent to voice-operated phone of the type commonly used by ssb stations. It does not permit hearing the other station whenever the key is up, as does full break-in.

Full break-in with excellent keying is not easy to come by, but it is easier than many amateurs think. Many use oscillator keying and put up with a second-best signal.

Differential Keying

The principle behind "differential" keying is to turn the oscillator on fast before a keyed amplifier stage can pass any signal and turn off the oscillator fast after the keyed amplifier stage has cut off. A number of circuits have been devised for accomplishing the action. The simplest, which should be applied *only* to a transmitter using a voltage-stable (crystal-controlled) oscillator is shown in Fig. 11-6. Many "simple" and kitted Novice transmitters can be modified to use this system, which approaches the performance of the "turner-onner" mentioned above insofar as the transmitter performance is concerned. With separate transmitting and receiving antennas, the performance is comparable.

A simple differential-keying circuit that can be applied to any grid-block keyed amplifier or tube-keyed stage by the addition of a triode and a VR tube is shown in Fig. 11-7. Using this keying

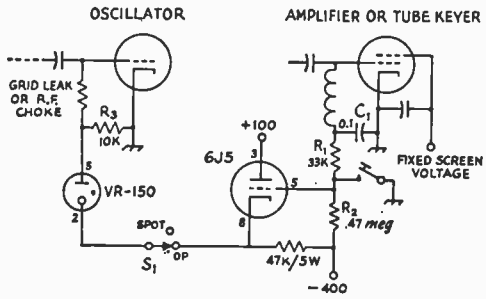

Fig. 11-7 — When satisfactory blocked-grid or tube keying of an amplifier stage has been obtained, this VR-tube break-in circuit can be applied to the transmitter to furnish differential keying. The constants shown here are suitable for blocked-grid keying of a 6146 amplifier; with a tube keyer the 6J5 and VR tube circuitry would be the same.

With the key up, sufficient current flows through R3 to give a voltage that will cut off the oscillator tube. When the key is closed, the cathode voltage of the 6J5 becomes close to ground potential, extinguishing the VR tube and permitting the oscillator to operate. Too much shunt capacity on the leads to the VR tube and too large a value of grid capacitance in the oscillator may slow down this action, and best performance will be obtained when the oscillator (turned on and off this way) sounds "clicky." The output envelope shaping is obtained in the amplifier, and it can be made softer by increasing the value of C1. If the keyed amplifier is a tetrode or pentode, the screen voltage should be obtained from a fixed voltage source or stiff voltage divider, not from the plate supply through a dropping resistor.

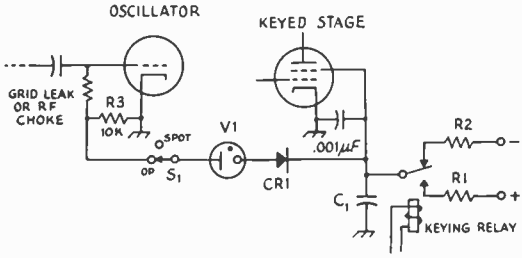

Fig. 11-8 – VR-tube differential keying in an amplifier screen circuit.

With key up and current flowing through V1 and CR1, the oscillator is cut off by the drop through R3. The keyed stage draws no current because its screen grid is negative. C1 is charged negatively to the value of the – source. When the relay is energized, C1 charges through R1 to a + value. Before reaching zero (on its way +) there is insufficient voltage to maintain ionization in V1, and the current is broken in R3, turning on the oscillator stage. As the screen voltage goes positive, the VR tube cannot reignite because the diode, CR1, will not conduct in that direction. The oscillator and keyed stage remain on as long as the relay is closed. When the relay opens, the voltage across C1 must be sufficiently negative for V1 to ionize before any bleeder current will pass through R3. By this time the screen of the keyed stage is so far negative that the tube has stopped conducting. (See Fig. 11-5 for suitable relay.)

system for break-in, the keying will be chirp-free if it is chirp-free with the VR tube removed from its socket to permit the oscillator to run all of the time. If the transmitter can't pass this test, it indicates that more isolation is required between keyed stage and oscillator.

Another VR-tube differential-keying circuit, useful when the screen-grid circuit of an amplifier is keyed, is shown in Fig. 11-8. The normal screen keying circuit is made up of the shaping capacitor C1, the keying relay (to remove dangerous voltages from the key), and the resistors R1 and R2. The + supply should be 50 to 100 volts higher than the normal screen voltage, and the – voltage should be sufficient to ignite the VR tube, V1, through the drop in R2 and R3. Current through R2 will be determined by the voltage required to cut off the oscillator; if 10 volts will do it the current will be 1 mA. For a desirable keying characteristic, R2 will usually have a higher value than R1. Increasing the value of C1 will soften both "make" and "break."

The tube used at V1 will depend upon the available negative supply voltage. If it is between 120 and 150, a 0A3/VR75 is recommended. Above this a 0C3/VR105 can be used. The diode, CR1, can be any unit operated within its ratings. A type 1N4005, for example, may be used with screen voltages under 600 and with far greater bleeder currents than are normally encountered – up to 1 ampere.

Clicks in Later Stages

It was mentioned earlier that key clicks can be generated in amplifier stages following the keyed stage or stages. This can be a puzzling problem to an operator who has spent considerable time adjusting the keying in his exciter unit for clickless keying, only to find that the clicks are bad when the amplifier unit is added. There are two possible causes for the clicks: low-frequency parasitic oscillations and amplifier "clipping."

Under some conditions an amplifier will be momentarily triggered into low-frequency parasitic oscillations, and clicks will be generated when the amplifier is driven by a keyed exciter. If these clicks are the result of low-frequency parasitic oscillations, they will be found in "groups" of clicks occurring at 50- to 150-kHz intervals either side of the transmitter frequency. Of course low-frequency parasitic oscillations can be generated in a keyed stage, and the operator should listen carefully to make sure that the output of the exciter is clean before he blames a later amplifier. Low-frequency parasitic oscillations are usually caused by poor choice in rf choke values, and the use of more inductance in the plate choke than in the grid choke for the same stage is recommended.

When the clicks introduced by the addition of an amplifier stage are found only near the transmitter frequency, amplifier "clipping" is indicated. It is quite common when fixed bias is used on the amplifier and the bias is well past the "cut-off" value. The effect can usually be minimized by using a combination of fixed and grid-leak bias for the amplifier stage. The fixed bias should be sufficient to hold the key-up plate current only to a low level and not to zero.

A linear amplifier (Class AB1, AB2 or B) will amplify the excitation without adding any clicks, and if clicks show up a low-frequency parasitic oscillation is probably the reason.

KEYING SPEEDS

In radio telegraphy the basic code element is the dot, or unit pulse. The time duration of a dot and a space is that of two unit pulses. A dash is three unit pulses long. The space between letters is three unit pulses; the space between words or groups is seven unit pulses. A speed of one baud is one pulse per second.

Assuming that a speed key is adjusted to give the proper dot, space and dash values mentioned above, the code speed can be found from

$$Speed\ (wpm) = \frac{dots/min.}{25} = 2.4 \times dots/sec.$$

E.g.: A properly adjusted electronic key gives a string of dots that count to 10 dots per second. Speed = 2.4 X 10 = 24 wpm.

Many modern electronic keyers use a clock or pulse-generator circuit which feeds a flip-flop dot generator. For these keyers the code speed may be determined directly from the clock frequency

$$Speed\ (wpm) = 1.2 \times clock\ frequency\ (Hz)$$

BREAK-IN OPERATION

Smooth cw break-in operation involves protecting the receiver from permanent damage by the transmitter power and assuring that the receiver will "recover" fast enough to be sensitive between dots and dashes, or at least between letters and words.

Separate Antennas

Few of the available antenna transfer relays are fast enough to follow keying, so the simplest break-in system is the use of a separate receiving antenna. If the transmitter power is low (25 or 50 watts) and the isolation between transmitting and receiving antennas is good, this method can be satisfactory. Best isolation is obtained by mounting the antennas as far apart as possible and at right angles to each other. Feed-line pickup should be minimized, through the use of coaxial cable or 300-ohm Twin-Lead. If the receiver recovers fast enough but the transmitter clicks are bothersome (they may be caused by the receiver overload and so exist only in the receiver) their effect on the operator can be minimized through the use of input and output limiters (see Chapter 8).

ELECTRONIC TRANSMIT-RECEIVE SWITCHES

When powers above 25 or 50 watts are used, where two antennas are not available, or when it is desired to use the same antenna for transmitting and receiving (a "must" when directional antennas are used), special treatment is required for quiet break-in operation on the transmitter frequency. A means must be provided for limiting the power that reaches the receiver input. This can be either a direct short-circuit, or may be a limiting device like an electronic switch used in the antenna feed line. The word "switch" is a misnomer in this case; the transmitter is connected directly to the antenna at all times. The receiver is connected to the antenna through the T-R switch, which functions to protect the receiver's input from transmitted power. In such a setup, all the operator need do is key the transmitter, and all the switching functions are taken care of by the T-R switch.

With the use of a T-R switch some steps should be taken to prevent receiver blocking. Turn off the agc or avc, decrease the rf gain setting, and advance the audio gain control. Use the rf gain control for obtaining the desired listening level. A little experimenting with the controls will provide the receiver settings best suited to individual operating preferences. A range of settings can usually be found, just on the threshold of receiver blocking, where comfortable levels of received signals are heard, and where, without adjusting the controls, the receiver can be used as a monitor during transmission. Usually no modification to the receiver is required, but if annoying clicks and thumps or excess volume occur at all settings of the receiver controls during transmission, their effect can be reduced with output audio limiting (see Chapter 8).

TVI and T-R Switches

T-R switches generate harmonics of the transmitted signal because of rectification of the energy reaching the input of the switch. These harmonics can cause TVI if steps are not taken to prevent it. Any T-R switch should be very well shielded, and should be connected with as short as possible a cable length to the transmitter. In addition, a low-pass filter may be required in the transmission line between the T-R switch and the antenna. Fig. 11-9 shows the proper method of interconnecting the various station accessory equipment.

Fig. 11-9 — Proper method of interconnecting T-R switch with various other station accessory equipment.

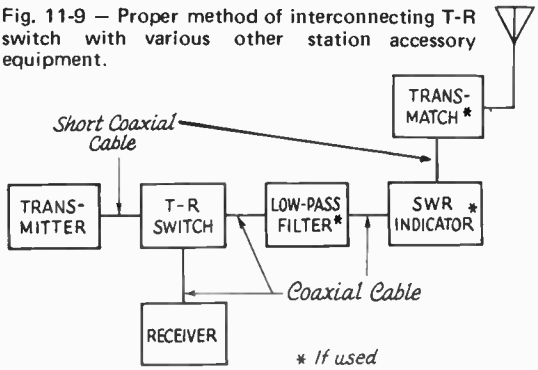

REDUCTION OF RECEIVER GAIN DURING TRANSMISSION

For absolutely smooth break-in operation with no clicks or thumps, means must be provided for momentarily reducing the gain through the receiver. The system shown in Fig. 1 permits quiet break-in operation of high-powered stations. It may require a simple operation on the receiver, although many commercial receivers already provide the connection and require no internal modification. The circuit is for use with a T-R switch and a single antenna. R1 is the regular receiver rf and i-f gain control. The ground lead is run to chassis ground through R2. A wire from the junction runs to the keying relay, K1. When the key is up, the ground side of R1 is connected to ground through the relay arm, and the receiver is in its normal operating condition. When the key is closed the relay closes, which breaks the ground connection from R1 and applies additional bias to the tubes in the receiver. This bias is controlled by R2. When the relay closes, it also closes the circuit to the transmitter keying circuit. A simple rf filter at the key suppresses the local clicks caused by the

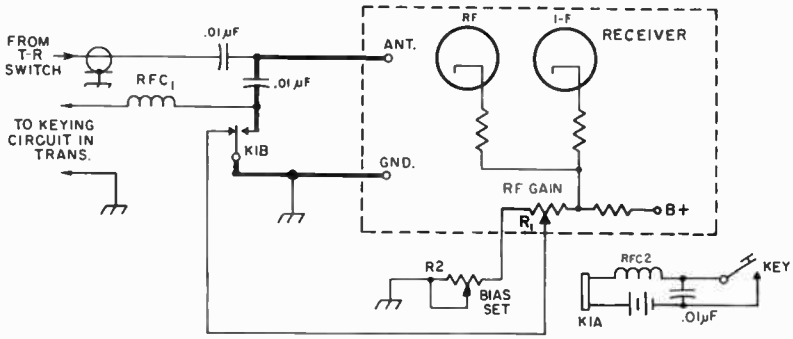

Fig. 1 — A circuit for smooth break-in operation, using an electronic T-R switch. The leads shown as heavy lines should be kept as short as possible, to minimize direct transmitter pickup.
K1 — Spdt keying relay (Sigma 41FZ-10000-ACS-SIL or equiv.). Although battery and dc relay are shown, any suitable ac or dc relay and power source can be used.
R1 — Receiver manual gain control.
R2 — 5000- or 10,000-ohm wire-wound potentiometer.
RFC1, RFC2 — 1- to 2 1/2-mH rf choke, current rating adequate for application.

relay current. This circuit is superior to any working on the agc line of the receiver because the cathode circuit(s) have shorter time constants than the agc circuits and will recover faster. A similar circuit may be used in the emitters or source leads of transistorized receivers.

A SOLID-STATE T-R SWITCH

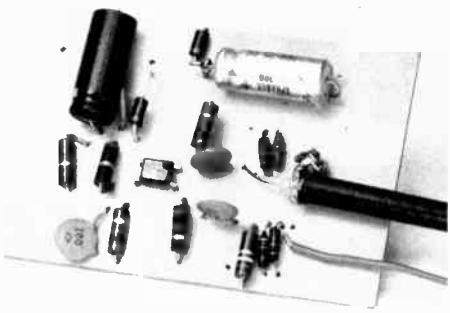

Fig. 1 — The solid-state T-R switch constructed on an etched circuit board of the pattern shown in *QST* for April, 1971, p. 32. The circuit could also be built on a piece of insulated or perforated board.

One of the simplest approaches to T-R switch construction is illustrated in Figs. 1 and 2. This circuit was designed by W4ETO and originally described by W1ICP in *QST* for April, 1971. A gate-protected dual-gate MOSFET couples an incoming signal to the receiver. When the transmitter is keyed, a sample of the signal is used to turn Q1 off. The dc voltage required to operate Q1 is obtained by rectifying 6.3 volts ac from the transmitter filament line. Connection to the line should be made to the ungrounded side of the heater supply.

Installation

Mount the T-R switch close to the transmitter PA tank. The coupling capacitor, C1, which should have a voltage rating of at least twice the plate voltage of the transmitter PA stage, should be connected with one end to the input side of the pi-network coil, as shown in Fig. 2. Mount a coax chassis fitting on the back of the transmitter chassis, and run a connecting line of coax from the fitting to the T-R switch. (This length of coax is shown in Fig. 1, extending out the right-hand side of the photograph.) Make sure the coax braid is grounded at the fitting and at the T-R switch. The receiver antenna terminals can then be connected, using coax, to the T-R coax terminal on the transmitter.

With high-power transmitters, near the kilowatt level, the value of C1 should be changed to no more than 1 pF. Because of this light coupling, a broadly resonant input circuit may be required on the T-R switch in order to have adequate gain during reception. This may be obtained by connecting an inductor from the junction of C1 and R1 to ground. The following values are suitable; 10 meters – 3 μH; 15 meters – 5 μH; 20 meters – 11 μH; 40 meters – 40 μH; and 80 meters – 130 μH. For operation on more than a single band, a single-pole 5-position rotary band switch may be used, with inductor values of 3.1 μH, 2.1 μH, 6.0 μH, 29 μH, and 90 μH connected in series. One end of the 3.1-μH inductor is connected to the T-R switch input, and the junction of this and the 2.1-μH inductor is grounded through the band switch for 10-meter

Fig. 2 — Circuit diagram of the T-R switch. All resistors are 1/2-watt composition. Parts not listed below are for circuit-board identification.
C1 — 5- to 10-pF.
C6, C7 — 100-μF, 25-volt electrolytic.
CR1, CR2, CR3, CR4 — 1N914 or equiv.
CR5, CR6 — 100 PRV, 100-mA silicon diode.
J1 — Coax chassis fitting.
Q1 — Gate-protected dual-gate MOSFET (RCA 40673 or Motorola MPF121).

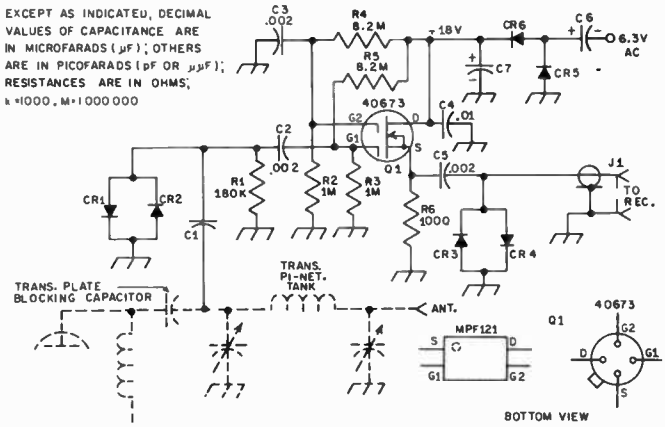

operation. For 15-meter operation, the junction of the 2.1- and 6-μH inductors is grounded, and so on, so that for 80-meter operation all 5 inductors in series are connected from the T-R switch input through the bandswitch to ground.

One thing about this type of device should be pointed out. The T-R switch is connected to the transmitter's tank circuit via C1, a low-value capacitor. If, as in the case of Class AB linear amplifiers, the amplifier plate current is not cut off when receiving, there may be enough noise generated in the amplifier tube to be objectionable during receive. Such noise should not be noticeable with Class C or with cathode-keyed amplifiers.

SELF-CONTAINED ALL-BAND ELECTRONIC T-R SWITCH

Fig. 1 — The knob at the left is used for peaking the tuned circuit. At the right is the bandswitch. Only four positions are shown; the 15-meter position also covers 10 meters, as mentioned in the text.

The vacuum-tube T-R switch shown in Figs. 1 through 4 differs in several ways from the preceding example. It contains its own power supply and consequently can be used with any transmitter/receiver combination without "borrowing" power. It will add gain and front-end selectivity to the receiver. A home made switch-coil-capacitor is shown in the unit, enabling the constructor to build his own.

In the circuit diagram of Fig. 2, one triode of a 12AU7 is used as an amplifier stage, followed by the other triode as a cathode-follower stage to couple between the tuned circuit and the receiver. The triodes are biased during transmission periods by rectified grid current, and insufficient power is fed to the receiver to damage its input circuit.

The T-R switch is intended to mount behind the transmitter near its output terminal, so that the connecting cable is short. The lead from the T-R switch to the receiver can be any reasonable length.

Components are mounted above and below the chassis. In wiring the switch, a length of RG-58/U should be used between the cathode-follower load (resistor and rf choke) and the output jack J2, to minimize "feedthrough" around the tube. A pair of .01 μF capacitors across the ac line where it enters the chassis helps to hold down the rf that might otherwise ride in on the ac line.

In operation, it is only necessary to switch the unit to the band in use and peak capacitor C4 for maximum signal or background noise. A significant increase in signal or background noise should be observed on any band within the range of the coil/capacitor combination.

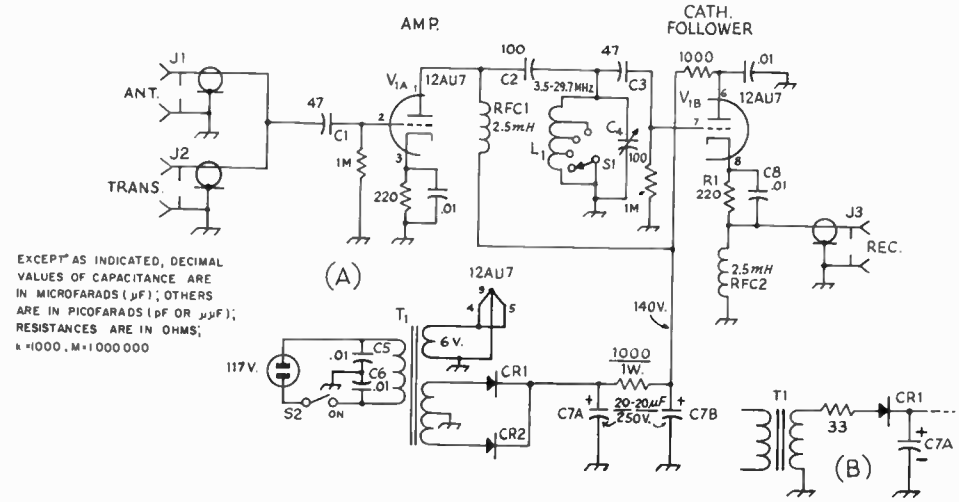

Fig. 2 — Circuit diagram of the T-R switch. Unless otherwise specified, resistors are 1/2 watt; decimal value fixed capacitors are disk ceramic, others are mica with the exception of C7, which is electrolytic. B — method of using a half-wave transformer for T1. Circuit designations not listed below are for text reference.

C4 — 100 pF variable (Millen 20100 or similar).
C7A, C7B — 20/20-μF electrolytic 250 volts or more.
CR1, CR2 — Silicon rectifier, 400 volts or more, any current rating over 40 mA.
J1, J2, J3 — Coax chassis receptacle, type SO-239.
L1 — See Fig. 3.
S1 — Single-pole, four-position wafer switch (Mallory 3115J, 3215J, or similar).
S2 — Spst toggle switch.
T1 — Power transformer, full-wave, 125-0-125 25 mA, 6.3 volts, 1 A (Stancor PS-8416, Knight 54A2008). B — half-wave, 125 V, 15 mA, 6 volts, 0.6 A (Stancor PS-8415, Knight 54-A1410).

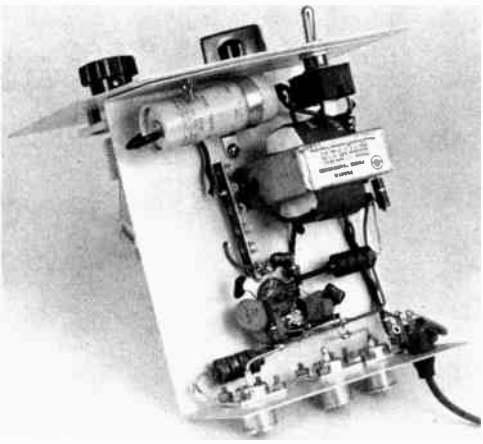

Fig. 3 — L1 and associated taps. L1 is 44 turns of No. 24, 32 turns per inch, 1 inch diameter (miniductor 3016, Air Dux 832T). To solder the tap leads, indent each turn adjacent to the tap point. This will allow soldering room.

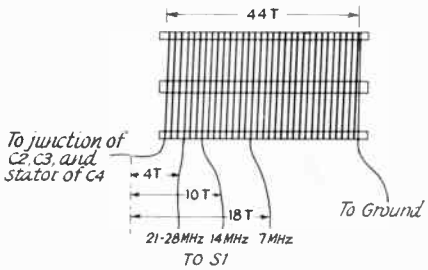

Fig. 4 — The power transformer and filter components are mounted at the upper right. Just to the bottom of center is the socket for the 12AU7.

TESTING AND MONITORING OF KEYING

In general, there are two common methods for monitoring one's "fist" and signal. The first type involves the use of an audio oscillator that is keyed simultaneously with the transmitter.

The second method is one that permits receiving the signal through one's receiver, and this generally requires that the receiver be tuned to the transmitter (not always convenient unless working

on the same frequency) and that some method be provided for preventing overloading of the receiver, so that a good replica of the transmitted signal will be received. Except where quite low power is used, this usually involves a relay for simultaneously shorting the receiver input terminals and reducing the receiver gain.

An alternative is to use an rf-powered audio oscillator. This follows the keying very closely (but tells nothing about the quality – chirps or clicks – of the signal).

The easiest way to find out what your keyed signal sounds like on the air is to trade stations with a near-by ham friend some evening for a short QSO. If he is a half mile or so away, that's fine, but any distance where the signals are still S9 will be satisfactory.

After you have found out how to work his rig, make contact and then have him send slow dashes, with dash spacing (the letter "T" at about 5 wpm). With minimum selectivity, cut the rf gain back just enough to avoid receiver overloading (the condition where you get crisp signals instead of mushy ones) and tune slowly from out of beat-note range on one side of the signal through to zero and out the other side. Knowing the tempo of the dashes, you can readily identify any clicks in the vicinity as yours or someone else's. A good signal will have a thump on "make" that is perceptible only where you can also hear the beat note, and the click on "break" should be practically negligible at any point. If your signal is like that, it will sound good, provided there are no chirps. Then have your friend run off a string of fast dots with the bug – if they are easy to copy, your signal has no "tails" worth worrying about and is a good one for any speed up to the limit of manual keying. Make one check with the selectivity in, to see that the clicks off the signal frequency are negligible even at high signal level.

If you don't have any friends with whom to trade stations, you can still check your keying, although you have to be a little more careful. The transmitter output should be fed into a shielded dummy load. Ordinary incandescent lamps are unsatisfactory as lamp resistance varies too much with current. The thermal lag may cause the results to be misleading.

The first step is to get rid of the rf click at the key. This requires an rf filter (mentioned earlier). With no clicks from a spark at the key, disconnect the antenna from your receiver and short the antenna terminals with a short piece of wire. Tune in your own signal and reduce the rf gain to the point where your receiver doesn't overload. Detune any antenna trimmer the receiver may have. If you can't avoid overload with the rf gain-control range, pull out the rf amplifier tube and try again. If you still can't avoid overload, listen to the second harmonic as a last resort. An overloaded receiver can generate clicks.

Describing the volume level at which you should set your receiver for these "shack" tests is a little difficult. The rf filter should be effective with the receiver running wide open and with an antenna connected. When you turn on the trans-

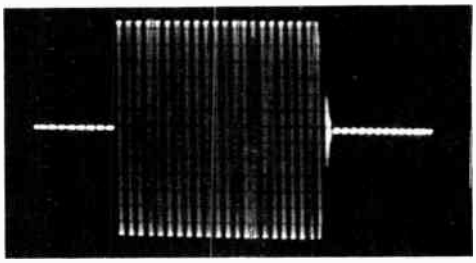

(A)

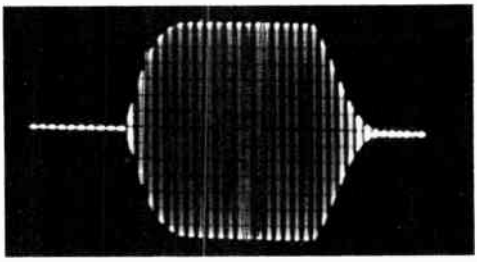

(B)

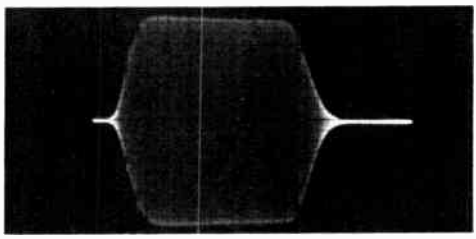

(C)

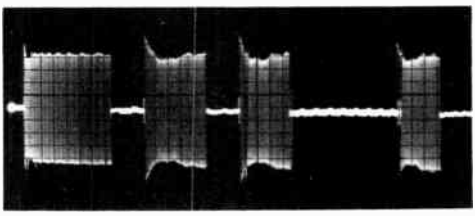

(D)

These photos show cw signals as observed on an oscilloscope. At A is a dot generated at a 46-baud rate with no intentional shaping, while at B the shaping circuits have been adjusted for approximately 5-ms rise and decay times. Vertical lines are from a 1-kHz signal applied to the Z or intensity axis for timing. Shown at C is a shaped signal with the intensity modulation of the pattern removed. For each of these photos, sampled rf from the transmitter was fed directly to the deflection plates of the oscilloscope.

At D may be seen a received signal having essentially no shaping. The spike at the leading edge is typical of poor power-supply regulation, as is also the immediately following dip and rise in amplitude. The clicks were quite pronounced. This pattern is typical of many observed signals, although not by any means a worst case. The signal was taken from the receiver's i-f amplifier (before detection) using a hand-operated sweep circuit to reduce the sweep time to the order of one second. (Photos from *QST* for October and November 1966.)

mitter and take the steps mentioned to reduce the signal in the receiver, run the audio up and the rf down to the point where you can just hear a little "rushing" sound with the BFO off and the receiver tuned to the signal. This is with the selectivity in. At this level, a properly adjusted keying circuit will show no clicks off the rushing-sound range. With the BFO on and the same gain setting, there should be no clicks outside the beat-note range. When observing clicks, make the slow-dash and dot tests outlined previously.

Now you know how your signal sounds on the air, with one possible exception. If keying your transmitter makes the lights blink, you may not be able to tell too accurately about the chirp on your signal. However, if you are satisfied with the absence of chirp when tuning *either side of zero beat*, it is safe to assume that your receiver isn't chirping with the light flicker and that the observed signal is a true representation. No chirp either side of zero beat is fine. Don't try to make these tests without first getting rid of the rf click at the key, because clicks can mask a chirp.

The least satisfactory way to check your keying is to ask another ham on the air how your keying sounds. It is the least satisfactory because most hams are reluctant to be highly critical of another amateur's signal. In a great many cases they don't actually know what to look for or how to describe any aberrations they may observe.

AN RF-ACTUATED CW MONITOR

This unit permits the operator to monitor his cw sending. Also, it can be used as a code-practice oscillator. As an oscillator, connect a key to TB1, and plug a set of phones into J3. To use the speaker, close S1 and advance R2. For use as a monitor, connect coax from your transmitter to J1 and route the antenna feed to J2. Set R1 so that the arm of the control is at the ground end. Connect a VTVM between terminal 1 on TB1 and the chassis. Next, tune up the rig to the input and adjust R1 so that the VTVM reads -7 or -8 volts. The monitor should be generating a tone, and if you have S1 turned on the audio gain control, R2, turned up, you should hear a note.

For headphone use, plug the phones into J3 and plug P1 into the receiver headphone jack. When receiving, the audio from the receiver will be piped through the monitor. When going to transmit, you'll hear the multivibrator oscillator tone in the phones. The battery drain is about 2 mA; it is a good idea to leave S1 switched off when the speaker is not in use. You don't have to disconnect the monitor from the rf line in order to use the unit as a code practice oscillator. (From *QST*, Nov. 1968.)

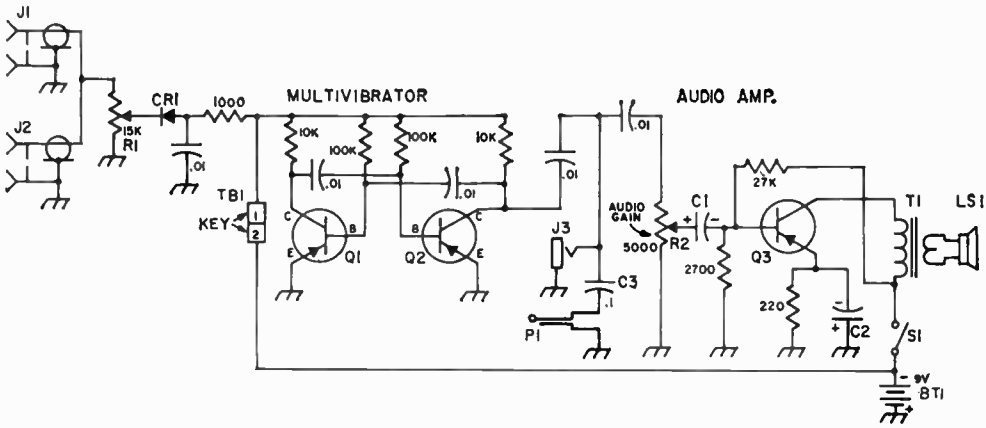

Fig. 11-10 — Circuit diagram of the cw monitor. Unless specified, all resistors are 1/2 watt; resistances are in ohms (K = 1000). All values of capacitors are in microfarads (μF, all .01-μF capacitors are disk ceramic). Capacitors marked with polarity are electrolytic.

BT1 — 9-volt battery.
C1, C2 — 25-μF electrolytic, 25 working volts or more.
C3 — 0.1 μF paper, 25 working volts or more.
CR1 — 1N277 or 1N34A.
J1, J2 — Coax chassis receptacle, type SO-239.
J3 — Open-circuit phone jack.
LS1 — Speaker, 3-inch diameter, 4-ohm type.
P1 — Phone plug.
Q1, Q2, Q3 — 2N406, SK3003, or equiv.
R1 — 15,000-ohm, 2-watt control.
R2 — 5000-ohm control with single-pole, single-throw switch, S1, mounted on rear.
T1 — Output transformer, 2000- to 5000-ohm primary, 4- to 10-ohm voice-coil secondary; see text (Lafayette 99 H 6101 or similar).
TB1 — Two-terminal connector.

A SINGLE-TUBE ELECTRONIC KEYER

An electronic keyer is a device that generates dots and dashes. To produce good code, a keyer must be self-completing and make the correct space between dots and dashes. A slow letter "N" is a good illustration. The operator hits the dash side of the lever and immediately moves it over to the dot side and holds. The keyer makes a complete dash, a correct space, and then one or more dots, depending on how long the lever is held in the dot position.

In theory, a perfect dash can be formed by filling in the space between two dots. That is what happens when the output of the dot generator is combined with that of the synchronized oscillator of Fig. 11-12. There is a large margin for error in tracking, if the weight adjustment is normal, because of the overlapping of the outputs from relays K2 and K3. The margin is equal to the width of a dot, and normally has a time equal to one third that of a dash.

When the lever is pushed to the dot side, C1 is charged to approximately +140 volts through the current-limiting resistor, R1, biasing V1A into heavy conduction. This causes K1 and K2 to operate, removing the charging voltage and closing the keyed circuit. C1 discharges rapidly through V1A until the grid of V1A becomes negative in respect to the cathode. C1 then continues to discharge at a slower rate, determined by the capacitance, the resistance of R2, and the voltage setting of R3. As conduction in V1A falls off, K2 opens and, at about twice the time interval, K1 recloses. If the key is held closed, C1 is recharged and the cycle is repeated. It should be noticed that, with the lever on the dot side, CR1 is reverse-biased and does not conduct.

Fig. 11-11 — The single-tube keyer, housed in a 4 × 6 × 2-inch aluminum chassis. Power switch, speed and weight controls are mounted along the front apron. On top are the power transformer, the 12AU7 and OB2 regulator.

With the lever on the dash side, CR1 and CR2 conduct, and the charging voltage is applied to both C1 and C2. This causes all relays to function. K3 is synchronized by K1 because C2 can receive a pulse only through the contacts of K1. The contacts on K3 serve two purposes. One is to prevent C2 from receiving a pulse while K3 is closed, and the other is to make the dash

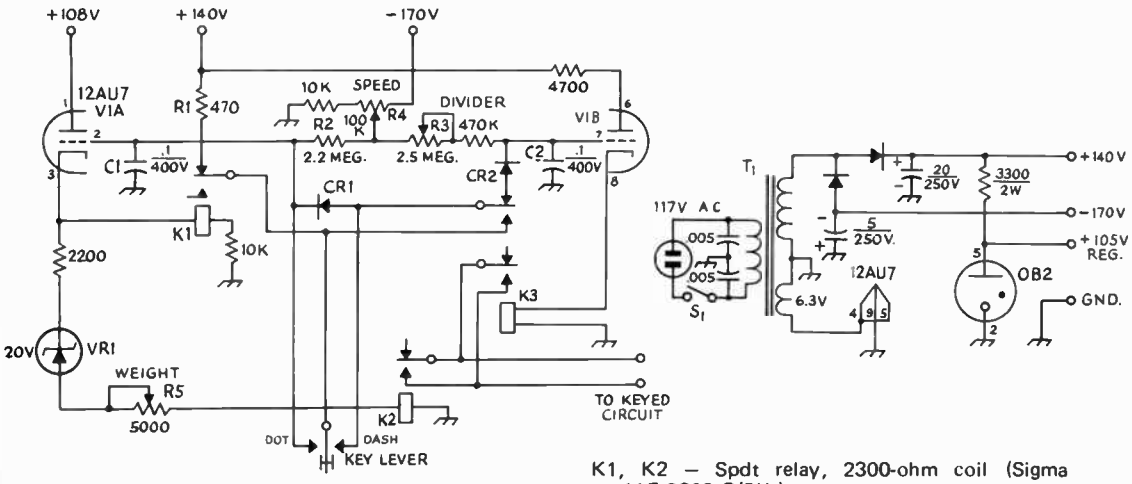

Fig. 11-12 — Circuit diagram of the single-tube keyer. Capacitances are in microfarads, resistances are in ohms (K = 1000). C1 and C2 are paper; capacitors with polarity markings are electrolytic. Fixed resistors are 1/2 watt. Diodes are 400 PRV silicon, 50 mA or greater. Key-lever leads should be shielded, with shield grounded to chassis. Rf filtering of the key leads is recommended.

K1, K2 — Spdt relay, 2300-ohm coil (Sigma 11F-2300-G/SIL).
K3 — Dpdt relay, 5000-ohm coil (Guardian IR-625-5).
R3, R4, R5 — Linear-taper control.
S1 — Spst toggle switch.
T1 — Power transformer: 125 volts, 15 mA; 6.3 volts, 0.6 A.
VR1 — 20-volt 1-watt Zener diode (GE Z4XL20, or similar).

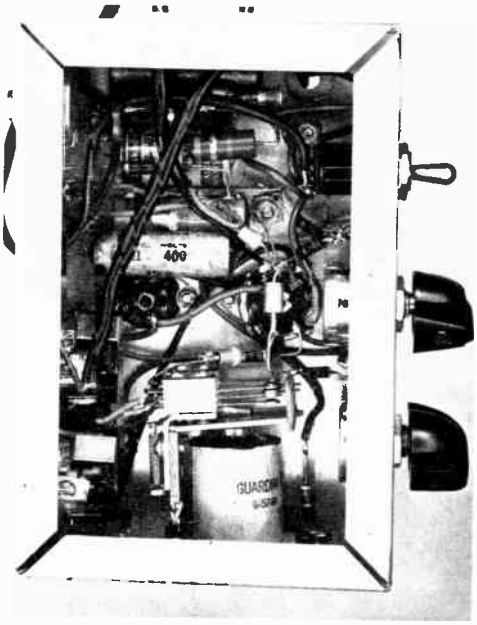

Fig. 11-13 — Bottom view of the simple keyer. K3 is mounted against the right-hand wall of the chassis, K1 and K2 against the rear wall. The relay mounting screws pass through rubber grommet-lined holes to minimize relay noise. The control in the lower left-hand corner is R3, the divider-adjustment control. The placement of other components is not critical. This keyer was originally described by W9HFM in *QST* for March 1967.

self-completing by insuring that two dots are produced while a dash is being formed. VR1 was found to be necessary to stabilize the weight adjustment.

The built-in power supply consists primarily of positive and negative rectifiers operating from the same transformer secondary. The 0B2 provides a regulated 105-volt tap on the positive supply.

The only special adjustment required is that of R3. It should be set so that K3 divides by 2, and yet does not lengthen the dash. When listening to K2 alone, it should sound exactly the same, whether the lever is pushed to the dot side or the dash side. Then, when listening to K3 alone, it should have a weight midway between a dot and a dash. When these requirements are met, the keyer should work properly.

A SOLID-STATE KEYER

Fig. 11-14 — This electronic speed keyer is 100-percent solid state and uses both integrated circuits and bipolar transistors. It operates over a speed range of 10 to 50 wpm and contains its own built-in monitor. This circuit was originally described in *QST*, August, 1967, by K3CUW.

This Micro-TO keyer circuit is a modern version of a keyer that was invented by W9TO. It is compact; inexpensive to build (under $25), and easy to construct. It employs both integrated circuits (ICs) and bipolar transistors. The complete package measures 4 × 5 × 6 inches.

The Circuit

The logic functions in the Micro-TO keyer (Figs. 11-14 through 11-16) are performed by silicon integrated circuits. The boxes labeled U1 and U2 are called J-K flip-flops, and contain some 15 transistors and 17 resistors; the details of the inner workings need not concern us. For our purposes, the flip-flops behave in the following way: Whenever the trigger input (pin 2) is brought from positive (more than 0.7 volt) to ground (less than 0.2 volt) the flip-flop can go into a new state. If both the inputs (pins 1 and 3) are held at ground during the negative-going trigger pulse, the outputs (pins 5 and 7) will complement (assume opposite states), while if pin 3 is grounded and pin 1 is held positive the flip-flop will go into the state in which pin 5 is grounded no matter what the initial state. Whenever the dot lever is closed and pin 1 of the dot flip-flop, U1, is thereby grounded, the pulse generator, which will be discussed in greater detail later, begins to deliver a string of pulses into the dot flip-flop trigger input. Grounding the dash contact also grounds the dot contact through CR2. A series of dots will appear at the dot flip-flop outputs as long as one of the levers is closed. The output of the dot flip-flop feeds through gates U3A and U3B (each of which consists of a pair of parallel transistors), to key the relay. When the dash lever is closed, pin 1 on the dash flip-flop, U2, is also grounded, and this flip-flop is ready to change state whenever pin 7 of the dot flip-flop goes to ground. Thus, when the dash lever is closed, the dot flip-flop changes state with the first trigger pulse and this in turn triggers the dash flip-flop. At the end of the first dot, the dash

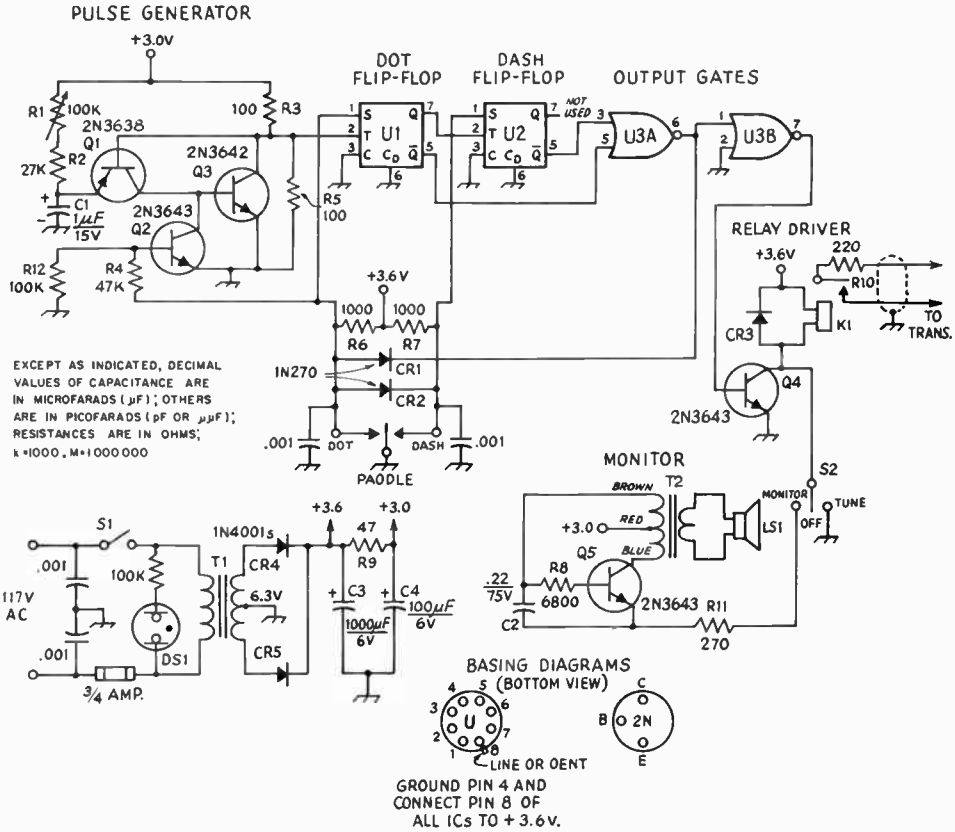

Fig. 11-15 — Schematic of the Micro-TO keyer. Capacitances are in μF; polarity indicates electrolytic; others are ceramic. Resistances are in ohms (K = 1000); resistors are 1/2-watt. Component designations not listed below are for layout reference.

CR1, CR2 — Must be germanium diodes.
CR3 — Any small-signal silicon diode.
OS1 — Neon pilot lamp.
K1 — Spst reed relay (Magnecraft W102MX1).
LS1 — 3-inch 4-, 8-, or 16-ohm speaker.
Q1-Q5, incl. — Must be silicon transistors with beta of 10 or greater; 2N4125 (pnp) and 2N4123 (npn) suitable.
R1 — 100,000-ohm control, linear taper, 2 watts, composition.
S1 — Spst switch on R1.
S2 — Spst center-off toggle switch.
T1 — 6.3-volt 0.6-A filament transformer (Stancor P6465 or equivalent).
T2 — Transistor output transformer, 500 ohms ct to 16 ohms (Argonne AR-118).
U1, U2 — RTL integrated-circuit J-K flip-flop (Fairchild μL923, Motorola MC882G, or Motorola HEP583 or equiv.).
U3 — RTL integrated-circuit dual 2-input gate (Fairchild μL914, Motorola MC814G, or Motorola HEP584, or equiv.).

flip-flop is still set and holds the relay in via the output gate. CR1 keeps the dot generator going even if the dash lever is released, and the keyer goes on to make a second dot. This time when pin 7 goes to ground it resets the dash flip-flop and, finally, after the end of the second dot, the relay opens and the keyer is ready to generate the next character. A little thought will reveal that once a character has started it is impossible to alter it with the keyer paddle. The dots and dashes are therefore self-completing.

The pulse generator is somewhat novel. Ignoring Q2 for the moment, the combination of Q1 and Q3 resembles a unijunction transistor. Both Q1 and Q3 are normally off, and the base of Q1 sits at 1.5 volts as determined by the 100-ohm divider resistors. C1 charges through R1 until the Q1 emitter reaches about 2.1 volts (1.5 volts plus the base-emitter voltage drop), at which point Q1 begins to turn on. Current begins to flow into the base of Q3 and it also begins to turn on. This lowers the base voltage on Q1, making it come on a little more; Q1 then feeds more current to Q3, making it come on harder, and so on. A cataclysmic collapse occurs which discharges C1 and generates the negative pulse required by the dot flip-flop. When there is not enough charge on C1 to keep things going, Q1 and Q3 turn off, the base of Q1 goes back to 1.5 volts, and the whole process repeats. Now putting Q2 back into the circuit, we see that with the key levers open it is normally conducting. Since the collector-emitter

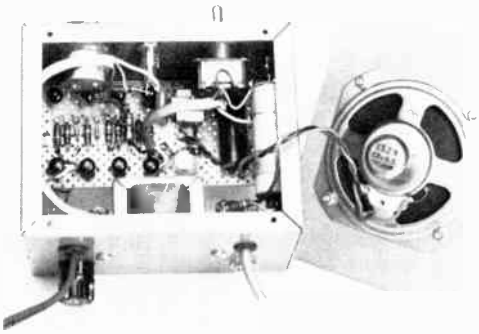

Fig. 11-16 — Components for the keyer are mounted on a piece of perforated Vector circuit board. The controls and some of the large components are mounted on the walls of the utility cabinet. The monitor speaker is attached to one lid of the box.

voltage on a saturated silicon transistor is less than the base-emitter drop required to turn it on, Q2 diverts any current that otherwise would go into the base of Q3. The collapsing process cannot begin, and C1 is clamped at 2.1 volts by the base-emitter diode of Q1. The instant the dot or dash lever is closed, however, Q2 is turned off and the collapse takes place immediately. The circuit is insensitive to dirty paddle contacts, and once the clock has started the interval between pulses is always the same. If a free-running pulse generator is desired, a switch can be installed to open the base lead of Q2. A speed range of 10 to 50 wpm is obtained with the constants shown.

An inexpensive reed relay is used to key the transmitter. It has operate and release times of less than 1 millisecond, including contact bounce, causing negligible keying delays at speeds below 100 wpm. The relay contacts occasionally stick together if the relay is used with transmitter keying lines having large bypass capacitors. A 220-ohm resistor has been added in series with one of the leads to eliminate the surge that causes the sticking. This small resistance has a negligible effect on the usual high-impedance grid-block keying line. The relay is not recommended for direct use with cathode-keyed transmitters running much more than 30 watts.

Operation of the monitor circuit depends on speaker resonance and transformer inductance to generate an audio tone. The values indicated work for the particular speaker-transformer combination indicated; if other parts are used the values of the 6800-ohm resistor and 0.22-μF capacitor will probably need to be changed. The waveform is a series of pulses which are damped out by the speaker resonance, and the resulting tone, while rough, is not annoying. The waveform can be made sinusoidal, but the keying then becomes clicky. The volume is determined by the value of R11, the 270-ohm resistor in the Q5 emitter lead.

Construction

The keyer is housed in a 3 × 4 × 5-inch aluminum utility cabinet. The small components are mounted on a 2 3/8 × 4 13/16-inch piece of Vectorbord. The speaker is bolted to the bottom of the box, in which a few holes are drilled, and the box is mounted on rubber feet so the sound can get out. The controls are mounted along the lower part of the box, and the wiring board is fastened with small brackets near the top so it will clear the controls and speaker. The relay is held to the side of the cabinet with a pair of cable clamps.

The Fairchild economy epoxy-cased integrated circuits may be hard to find. The name of the nearest distributor can be obtained from Fairchild Semiconductor, Marketing Services Dept., P. O. Box 1058, Mountain View, California. Motorola MC800-series ICs are obtainable through industrial suppliers. Motorola HEP devices are available at many electronics stores. Other silicon transistor types could be substituted.

RELAY DRIVER FOR USE WITH SOLID-STATE KEYERS

Some of today's transistorized electronic keyers will not operate with all transmitters because of the limitations of the transistor in the switching stage of the keyer. In many cases, voltages above 100 volts and currents greater than 30 to 40 mA will damage the switching transistor. One solution to this problem is the addition of an external circuit to actuate a keying relay, as shown in Figs. 11-17, -18, and -19. The relay contacts then key the transmitter.

A medium-voltage power supply provides the current needed to operate the relay, K1. Relay keying is accomplished by closing the terminals connected to the relay coil. Keyed current is 8 mA, while the open-circuit voltage at the key-line terminals is less than 40 V – safe enough values for virtually any transistor-output keyer. And by observing the voltage polarity of the key-line terminals, the driver may be keyed with either an npn or a pnp transistor. The relay may also be keyed with a hand key connected to the key-line terminals. This would avoid contact arcing and the relatively high voltages which result across the open key terminals when a medium-power transmitter is cathode keyed. In addition, the relay driver may be used in conjunction with light-duty keying relays, such as reed relays often used in solid-state electronic keyers, if it is desired to key large currents. The mercury-wetted contacts of K1 are fast acting with minimal bounce. This relay will have no problem following speeds of 50 or 60 wpm, and it is quiet in operation. For proper

Fig. 11-17 — Relay driver as constructed by WA1CQW. The Western Electric 275B relay plugs into an octal socket.

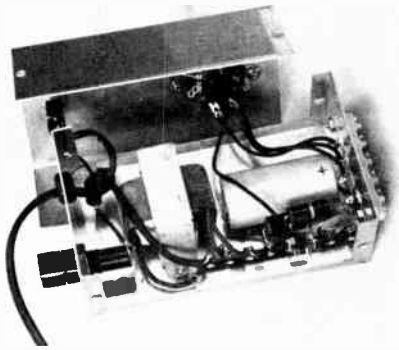

Fig. 11-19 — This inside view of the relay driver shows the transformer mounted on the enclosure, and the rectifier and filter components mounted on a tie-point strip. The 4-lug screw-terminal strip for making external connections is ceramic, a Millen No. E-304; a phenolic strip may be used instead.

results, however, the relay must be operated in the vertical position. Otherwise the mercury pool will cause false closure of the contacts.

Construction

The relay driver shown in the photographs is built into a metal box measuring 2 1/8 × 3 × 5 1/4 inches. The power-supply portion of the circuit is contained completely inside the enclosure, to avoid having exposed voltages which could be dangerous to an operator. Although a 4-lug screw-terminal strip was used for making external connections to the instrument, phone or phono jacks could just as well have been used. Having all connections isolated from the metal enclosure offers advantages, though, if versatility regarding polarity of connections is desired – there need be no worry about negative- or positive-ground configurations.

Parts layout is not critical. Several types of relays having mercury-wetted contacts are available either new or on the surplus market,[1] and any having a dc coil resistance in the range of 4000 to 5000 ohms should work in this circuit. Make sure to check pin connections if a different relay is used, however.

[1] Surplus W. E. 275B relays are available from Barry Electronics Corp., 512 Broadway, New York, NY 10012, under Catalog No. 20-145GA.

Bibliography

Source material and more extended discussions of topics covered in this chapter can be found in the references given below. In addition, a detailed bibliography of electronic keyer information is available upon request from ARRL Hq. Please enclose a stamped self-addressed business-size envelope.

Grammer, "Oscilloscope Setups for Transmitter Testing," *QST*, October 1964; "V.F.O. Stability – Recap and Postscript," *QST*, Sept. and Oct. 1966; "Why Key Clicks?" *QST*, Oct. 1966; "Low-Level Blocked-Grid Keying," *QST*, Nov. 1966.

McCoy, "Clicks and Chirps – Let's Clean 'Em Up!" *QST*, Sept. 1967; "An R.F.-Actuated C.W. Monitor," *QST*, Nov. 1968; "Simplified Antenna Switching," *QST*, April 1971.

Drury, "A Single-Tube Electronic Keyer," *QST*, March 1967.

Opal, "The Micro-TO Keyer," *QST*, Aug. 1967; "Micro-TO Revisited," Technical Correspondence, *QST*, Mar. 1968.

"A Relay Driver for Use with Solid-State Keyers," Gimmicks and Gadgets, *QST*, Oct. 1971.

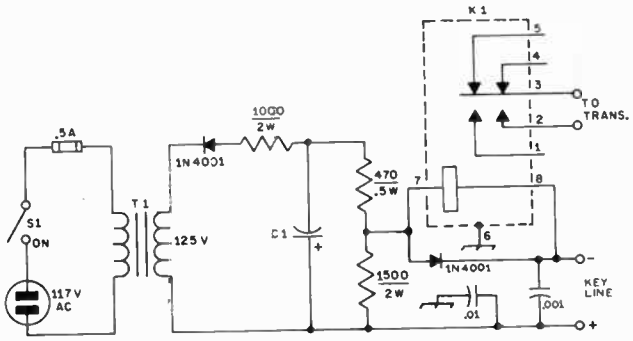

Fig. 11-18 — Schematic diagram of the relay driver. Resistances are in ohms.
C1 — Electrolytic; any value between 10 and 100 μF, 250- or 450-V rating.
K1 — Hermetically sealed relay, 4500-ohm, 8-mA operating current; mercury-wetted spdt contacts (Western Electric 275B or equiv.)
S1 — Spst toggle.
T1 — Plate-filament power transformer, 125-V, 15-mA and 6.3-V, 0.6-A secondaries; 6.3-V secondary unused (Stancor PS-8415 or equiv.).

Chapter 12

Amplitude Modulation and Double-Sideband Phone

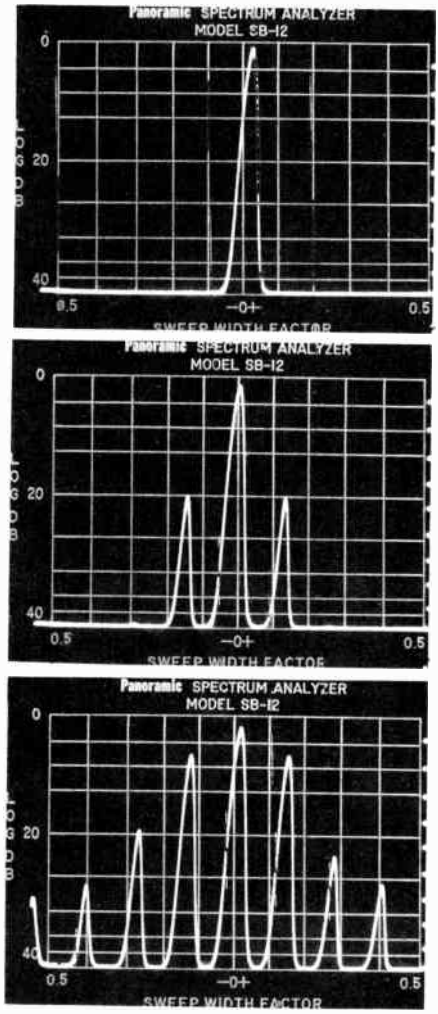

Fig. 12-1 — Spectrum-analyzer display of the rf output of an a-m transmitter. Frequency is presented on the horizontal axis (7-kHz total display width) versus relative amplitude of the signal component on the vertical axis. Shown at A is the unmodulated carrier, which occupies but a single frequency. At B the carrier is 20-percent modulated with a 1000-Hz tone. Each sideband may be seen to be at a level approximately 20 dB below the carrier. The signal bandwidth in this case is twice the modulating frequency, or 2 kHz. Shown at C is the widened channel bandwidth resulting from splatter caused by overmodulation. New frequencies, audio harmonics of the 1000-Hz modulating tone, extend for several kilohertz either side of the carrier.

As described in the chapter on circuit fundamentals, the process of modulation sets up groups of frequencies called sidebands, which appear symmetrically above and below the frequency of the unmodulated signal or carrier. If the instantaneous values of the amplitudes of all these separate frequencies are added together, the result is called the modulation envelope. In amplitude modulation (a-m) the modulation envelope follows the amplitude variations of the signal that is used to modulate the wave.

For example, modulation by a 1000-Hz tone will result in a modulation envelope that varies in amplitude at a 1000-Hz rate. The actual rf signal that produces such an envelope consists of three frequencies – the carrier, a side frequency 1000 Hz higher, and a side frequency 1000 Hz lower than the carrier. See Fig. 12-1. These three frequencies easily can be separated by a receiver having high selectivity. In order to reproduce the original modulation the receiver must have enough bandwidth to accept the carrier and the sidebands simultaneously. This is because an a-m detector responds to the modulation envelope rather than to the individual signal components, and the envelope will be distorted in the receiver unless all the frequency components in the signal go through without change in their amplitudes.

In the simple case of tone modulation the two side frequencies and the carrier are constant in amplitude – it is only the envelope amplitude that varies at the modulation rate. With more complex modulation such as voice or music the amplitudes and frequencies of the side frequencies vary from instant to instant. The amplitude of the modulation envelope varies from instant to instant in the same way as the complex audio-frequency signal causing the modulation. Even in this case the *carrier* amplitude is constant if the transmitter is properly modulated.

A-M Sidebands and Channel Width

Speech can be electrically reproduced, with high intelligibility, in a band of frequencies lying between approximately 100 and 3000 Hz. When these frequencies are combined with a radio-frequency carrier, the sidebands occupy the frequency spectrum from about 3000 Hz below the carrier frequency to 3000 Hz above – a total band or channel of about 6 kHz.

Actual speech frequencies extend up to 10,000 Hz or more, so it is possible to occupy a 20-kHz channel if no provision is made for reducing its width. For communication purposes such a channel width represents a waste of valuable spectrum space, since a 6-kHz channel is fully

adequate for intelligibility. Occupying more than the minimum channel creates unnecessary interference.

THE MODULATION ENVELOPE

In Fig. 12-2 the drawing at A shows the unmodulated rf signal, assumed to be a sine wave of the desired radio frequency. The graph can be taken to represent either voltage or current.

In B, the signal is assumed to be modulated by the audio frequency shown in the small drawing above. This frequency is much lower than the carrier frequency, a necessary condition for good modulation. When the modulating voltage is "positive," (above its axis) the envelope amplitude is increased *above* its unmodulated amplitude; when the modulating voltage is "negative," the envelope amplitude is *decreased*. Thus the envelope grows larger and smaller with the polarity and amplitude of the modulating voltage.

The drawing at C shows what happens with stronger modulation. The envelope amplitude is doubled at the instant the modulating voltage reaches its positive peak. On the negative peak of the modulating voltage the envelope amplitude just reaches zero.

Percentage of Modulation

When a modulated signal is detected in a receiver, the detector output follows the modulation envelope. The stronger the modulation, therefore, the greater is the useful receiver output. Obviously, it is desirable to make the modulation as strong or "heavy" as possible. A wave modulated as in Fig. 12-2C would produce more useful audio output than the one shown at B.

The "depth" of the modulation is expressed as a percentage of the unmodulated carrier amplitude. In either B or C, Fig. 12-2, X represents the unmodulated carrier amplitude, Y is the maximum envelope amplitude on the modulation uppeak, and Z is the minimum envelope amplitude on the modulation downpeak.

In a properly operating modulation system the modulation envelope is an accurate reproduction of the modulating wave, as can be seen in Fig. 12-2 at B and C by comparing one side of the outline with the shape of the modulating wave. (The lower outline duplicates the upper, but simply appears upside down in the drawing.)

The percentage of modulation is

$$\% \text{ Mod.} = \frac{Y - X}{X} \times 100 \text{ (upward modulation), or}$$

$$\% \text{ Mod.} = \frac{X - Z}{X} \times 100 \text{ (downward modulation)}$$

If the two percentages differ, the larger of the two is customarily specified. If the wave shape of the modulation is such that its peak positive and negative amplitudes are equal, then the modulation percentage will be the same both up and down, and is

$$\% \text{ Mod.} = \frac{Y - Z}{Y + Z} \times 100.$$

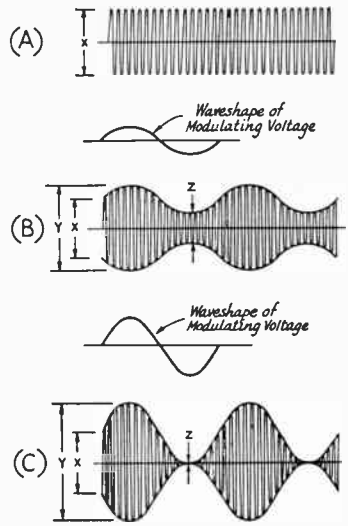

Fig. 12-2 — Graphical representation of (A) rf output unmodulated, (B) modulated 50 percent, (C) modulated 100 percent. The modulation envelope is shown by the thin outline on the modulated wave.

Power in Modulated Wave

The amplitude values shown in Fig. 12-2 correspond to current and voltage, so the drawings may be taken to represent instantaneous values of either. The power in the wave varies as the *square* of either the current or voltage, so at the peak of the modulation upswing the instantaneous power in the envelope of Fig. 12-2C is four times the unmodulated carrier power (because the current and voltage both are doubled). At the peak of the downswing the power is zero, since the amplitude is zero. These statements are true of 100-percent modulation no matter what the wave form of the modulation. The instantaneous envelope power in the modulated signal is proportional to the square of its envelope amplitude at every instant. This fact is highly important in the operation of every method of amplitude modulation.

It is convenient, and customary, to describe the operation of modulation systems in terms of sine-wave modulation. Although this wave shape is seldom actually used in practice (voice wave shapes depart very considerably from the sine form) it lends itself to simple calculations and its use as a standard permits comparison between systems on a common basis. With sine-wave modulation the *average* power in the modulated signal over any number of full cycles of the modulation frequency is found to be 1-1/2 times the power in the unmodulated carrier. In other words, the power output increases 50 percent with 100-percent modulation by a sine wave.

This relationship is very useful in the design of modulation systems and modulators, because any such system that is capable of increasing the *average* power output by 50 percent with sine-wave

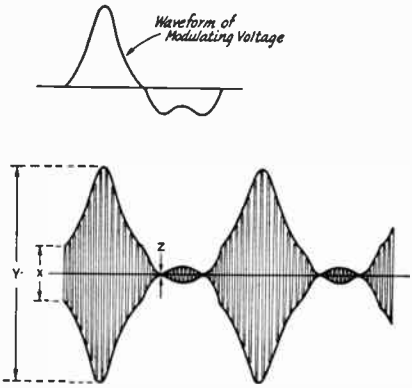

Fig. 12-3 — Modulation by an unsymmetrical wave form. This drawing shows 100-percent downward modulation along with 300-percent upward modulation. There is no distortion, since the modulation envelope is an accurate reproduction of the wave form of the modulating voltage.

modulation automatically fulfills the requirement that the *instantaneous* power at the modulation uppeak be four times the carrier power. Consequently, systems in which the additional power is supplied from outside the modulated rf stage (e.g., plate modulation) usually are designed on a sine-wave basis as a matter of convenience. Modulation systems in which the additional power is secured from the modulated rf amplifier (e.g., grid modulation) usually are more conveniently designed on the basis of peak envelope power rather than average power.

The extra power that is contained in a modulated signal goes entirely into the sidebands, half in the upper sideband and half into the lower. As a numerical example, full modulation of a 100-watt carrier by a sine wave will add 50 watts of sideband power, 25 in the lower and 25 in the upper sideband. With lower modulation percentages, the sideband power is proportional to the *square* of the modulation percentage, i.e., 50-percent modulation will add 12.5 watts of sideband power, 6.25 watts in each sideband. Supplying this additional power for the sidebands is the object of all of the various systems devised for amplitude modulation.

No such simple relationship exists with complex wave forms. Complex wave forms such as speech do not, as a rule, contain as much average power as a sine wave. Ordinary speech wave forms have about half as much average power as a sine wave, for the same peak amplitude in both wave forms. Thus for the same modulation percentage, the sideband power with ordinary speech will average only about half the power with sine-wave modulation, since it is the peak envelope amplitude, not the average power, that determines the percentage of modulation.

Unsymmetrical Modulation

In an ordinary electric circuit it is possible to increase the amplitude of current flow indefinitely, up to the limit of the power-handling capability of the components, but it cannot very well be decreased to less than zero. The same thing is true of the amplitude of an rf signal; it can be modulated *upward* to any desired extent, but it cannot be modulated *downward* more than 100 percent.

When the modulating wave form is unsymmetrical it is possible for the upward and downward modulation percentages to be different. A simple case is shown in Fig. 12-3. The positive peak of the modulating signal is about 3 times the amplitude of the negative peak. If, as shown in the drawing, the modulating amplitude is adjusted so that the peak downward modulation is just 100 percent ($Z = 0$) the peak upward modulation is 300 percent ($Y = 4X$). The carrier amplitude is represented by X, as in Fig. 12-2. The modulation envelope reproduces the wave form of the modulating signal accurately, hence there is no distortion. In such a modulated signal the increase in power output with modulation is considerably greater than it is when the modulation is symmetrical. In Fig. 12-3 the peak envelope amplitude, Y, is four times the carrier amplitude, X, so the peak-envelope power (PEP) is 16 times the carrier power. When the upward modulation is more than 100 percent the power capacity of the modulating system obviously must be increased sufficiently to take care of the much larger peak amplitudes.

Overmodulation

If the amplitude of the modulation on the downward swing becomes too great, there will be a period of time during which the rf output is entirely cut off. This is shown in Fig. 12-4. The shape of the downward half of the modulating wave is no longer accurately reproduced by the modulation envelope, consequently the modulation is distorted. Operation of this type is called overmodulation.

The distortion of the modulation envelope causes new frequencies (harmonics of the modulating frequency) to be generated. These combine

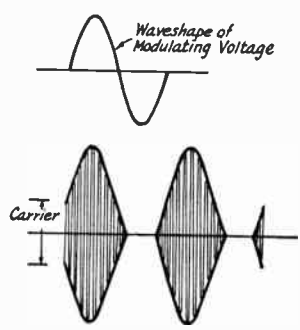

Fig. 12-4 — An overmodulated signal. The modulation envelope is not an accurate reproduction of the wave form of the modulating voltage. This, or any type of distortion occurring during the modulation process, generates spurious sidebands or "splatter."

with the carrier to form new side frequencies that widen the channel occupied by the modulated signal, as shown in Fig. 12-1C. These spurious frequencies are commonly called "splatter."

It is important to realize that the channel occupied by an amplitude-modulated signal is dependent *on the shape of the modulation envelope.* If this wave shape is complex and can be resolved into a wide band of audio frequencies, then the channel occupied will be correspondingly large. An overmodulated signal splatters and occupies a much wider channel than is necessary because the "clipping" of the modulating wave that occurs at the zero axis changes the envelope wave shape to one that contains high-order harmonics of the original modulating frequency. These harmonics appear as side frequencies separated by, in some cases, many kHz from the carrier frequency.

Because of this clipping action at the zero axis, it is important that care be taken to prevent applying too large a modulating signal in the downward direction. Overmodulation downward results in more splatter than is caused by most other types of distortion in a phone transmitter.

AMPLITUDE MODULATION METHODS

MODULATION SYSTEMS

As explained in the preceding section, amplitude modulation of a carrier is accompanied by an increase in power output, the additional power being the "useful" or "talk power" in the sidebands. This additional power may be supplied from an external source in the form of audio-frequency power. It is then added to the unmodulated power input to the amplifier to be modulated, after which the combined power is converted to rf. This is the method used in plate modulation. It has the advantage that the rf power is generated at the high-efficiency characteristic of Class C amplifiers – of the order of 65 to 75 percent – but has the accompanying disadvantage that generating the audio-frequency power is rather expensive.

An alternative that does not require relatively large amounts of audio-frequency power makes use of the fact that the power output of an amplifier can be controlled by varying the potential of a tube element – such as a control grid or a screen grid – that does not, in itself, consume appreciable power. In this case the additional power during modulation is secured by sacrificing carrier power; in other words, a tube is capable of delivering only so much total power within its ratings, and if more must be delivered at full modulation, then less is available for the unmodulated carrier. Systems of this type must of necessity work at rather low efficiency at the unmodulated carrier level. As a practical working rule, the efficiency of the modulated rf amplifier is of the order of 30 to 35 percent, and the unmodulated carrier power output obtainable with such a system is only about one-fourth to one-third that obtainable from the same amplifier with plate modulation.

PLATE MODULATION

Fig. 12-5 shows the most widely used system of plate modulation, in this case with a triode rf tube. A balanced (push-pull Class A, Class AB or Class B) modulator is transformer coupled to the plate circuit of the modulated rf amplifier. The audio-frequency power generated by the modulator is combined with the dc power in the modulated-amplifier plate circuit by transfer through the coupling transformer, T. For 100-percent modulation the audio-frequency power output of the modulator and the turns ratio of the coupling transformer must be such that the voltage at the plate of the modulated amplifier varies between zero and twice the dc operating plate voltage, thus causing corresponding variations in the amplitude of the rf output.

Audio Power

As stated earlier, the average power output of the modulated stage must increase during modulation. The modulator must be capable of supplying to the modulated rf stage sine-wave audio power equal to 50 percent of the dc plate input. For example, if the dc plate power input to the rf stage

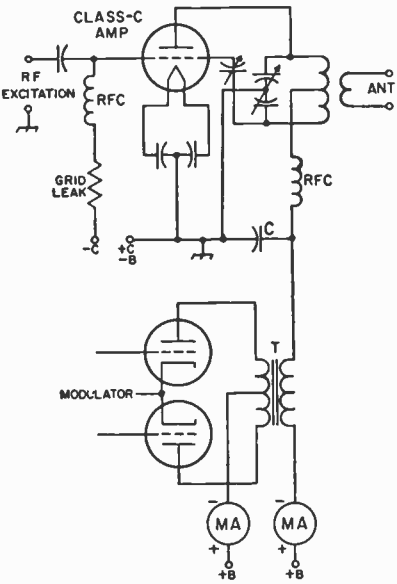

Fig. 12-5 – Plate modulation of a Class C rf amplifier. The rf plate bypass capacitor, C, in the amplifier stage should have reasonably high reactance at audio frequencies. A value of the order of .001 μF to .005 μF is satisfactory in practically all cases.

is 100 watts, the sine-wave audio power output of the modulator must be 50 watts.

Although the total power input (dc plus audio-frequency ac) increases with modulation, the dc plate current of a plate-modulated amplifier should not change when the stage is modulated. This is because each increase in plate voltage and plate current is balanced by an equivalent decrease in voltage and current on the next half cycle of the modulating wave. Dc instruments cannot follow the af variations, and since the average dc plate current and plate voltage of a properly operated amplifier do not change, neither do the meter readings. A change in plate current with modulation indicates nonlinearity. On the other hand, a thermocouple rf ammeter connected in the antenna, or transmission line, will show an increase in rf current with modulation, because instruments of this type respond to power rather than to current or voltage.

Modulating Impedance; Linearity

The modulating impedance, or load resistance presented to the modulator by the modulated rf amplifier, is equal to

$$Z_m = \frac{E_b}{I_p} \times 1000 \text{ ohms}$$

where E_b = Dc plate voltage
I_p = Dc plate current (mA)
E_b and I_p are measured without modulation.

The power output of the rf amplifier must vary as the square of the instantaneous plate voltage (the rf output voltage must be proportional to the plate voltage) for the modulation to be linear. This will be the case when the amplifier operates under Class C conditions. The linearity depends upon having sufficient grid excitation and proper bias, and upon the adjustment of circuit constants to the proper values.

Screen-Grid RF Amplifiers

Screen-grid tubes of the pentode or beam-tetrode type can be used in Class C plate-modulated amplifiers by applying the modulation to both the plate and screen grid. The usual method of feeding the screen grid with the necessary dc and modulation voltages is shown in Fig. 12-6. The dropping resistor, R, should be of the proper value to apply normal dc voltage to the screen under steady carrier conditions. Its value can be calculated by taking the difference between plate and screen voltages and dividing it by the rated screen current.

The modulating impedance is found by dividing the dc plate voltage by the sum of the plate and screen currents. The plate voltage multiplied by the sum of the two currents gives the power input to be used as the basis for determining the audio power required from the modulator.

Modulation of the screen along with the plate is necessary because the screen voltage has a much greater effect on the plate current than the plate voltage does. The modulation characteristic is nonlinear if the plate alone is modulated.

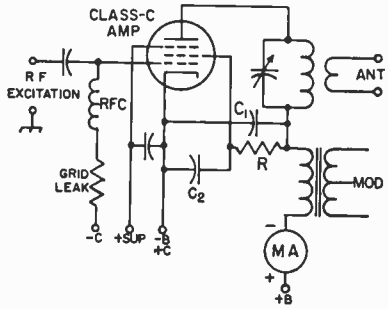

Fig. 12-6 — Plate and screen modulation of a Class C rf amplifier using a screen-grid tube. The plate rf bypass capacitor, C1, should have reasonably high reactance at all audio frequencies; a value of .001 to .005 μF is generally satisfactory. The screen bypass, C2, should not exceed .002 μF in the usual case.

When the modulated amplifier is a beam tetrode the suppressor connection shown in this diagram may be ignored. If a base terminal is provided on the tube for the beam-forming plates, it should be connected as recommended by the tube manufacturer.

Choke-Coupled or Heising Modulation

One of the oldest types of plate modulating systems is the choke-coupled Class A or Heising modulator shown in Fig. 12-7. Because of the relatively low power output and plate efficiency of a Class A amplifier, the method is rarely used now except for a few special applications.

The audio power output of the modulator is combined with the dc power in the plate circuit through the modulation choke, L1, which has a high impedance at audio frequencies. This technique of modulating the rf signal is similar to the case of the transformer-coupled modulator but there is considerably less freedom in adjustment since no transformer is available for matching impedances. The dc input power to the rf stage must not exceed twice the rated af power output of the modulator, and for 100-percent modulation the plate voltage on the modulator must be higher than the plate voltage on the rf amplifier. This is because the af voltage developed by the modulator cannot swing to zero without a great deal of distortion. R1 provides the necessary dc voltage drop between the modulator and the rf amplifier. The voltage drop across this resistor must equal the minimum instantaneous plate voltage on the modulator tube under normal operating conditions. C1, an audio-frequency bypass across R1, should have a capacitance such that its reactance at 100 Hz is not more than about one-tenth the resistance of R1. Without R1-C1 the percentage of modulation is limited to 70 to 80 percent in the average case.

GRID MODULATION

The principal disadvantage of plate modulation is that a considerable amount of audio power is necessary. This requirement can be avoided by applying the modulation to a grid element in the

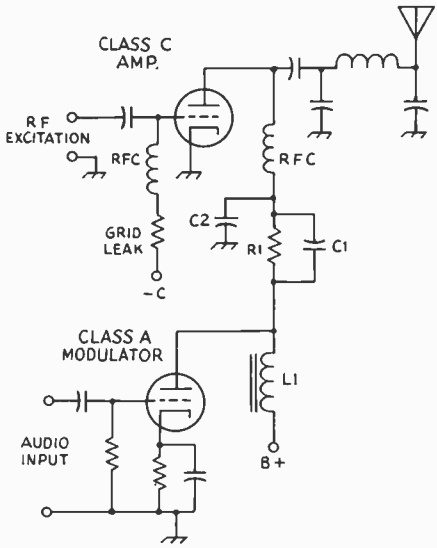

Fig. 12-7 – Choke-coupled Class A modulator. The modulation choke, L1, should have a value of 5 H or more. A value of .001 to .005 μF is satisfactory for C2. See text for discussion of C1 and R1.

modulated amplifier. However, serious disadvantages of grid modulation are the reduction in the carrier power output obtainable from a given rf amplifier tube and the more rigorous operating requirements and more complicated adjustment.

The term "grid modulation" as used here applies to all types – control grid, screen, or suppressor – since the operating principles are exactly the same no matter which grid is actually modulated. (Screen-grid modulation is the most commonly used technique of the three types listed here.) With grid modulation the plate voltage is constant, and the increase in power output with modulation is obtained by making both the plate current and plate efficiency vary with the modulating signal. The efficiency obtainable at the envelope peak depends on how carefully the modulated amplifier is adjusted, and sometimes can be as high as 80 percent. It is generally less when the amplifier is adjusted for good linearity, and under average conditions a round figure of 2/3, or 66 percent, is representative. The efficiency without modulation is only half the peak efficiency, or about 33 percent. This low average efficiency reduces the permissible carrier output to about one-fourth the power obtainable from the same tube in cw operation, and to about one-third the carrier output obtainable from the tube with plate modulation.

The modulator is required to furnish only the audio power dissipated in the modulated grid under the operating conditions chosen. A speech amplifier capable of delivering 3 to 10 watts is usually sufficient.

Grid modulation does not give quite as linear a modulation characteristic as plate modulation, even under optimum operating conditions. When misadjusted the nonlinearity may be severe, resulting in considerable distortion and splatter.

Screen Grid Modulation

Screen modulation is probably the simplest and most popular form of grid modulation, and the least critical of adjustment. The most satisfactory way to apply the modulating voltage to the screen is through a transformer, as shown in Fig. 12-8. With practical tubes it is necessary to drive the screen somewhat negative with respect to the cathode to get complete cutoff of rf output. For this reason the peak modulating voltage required for 100-percent modulation is usually 10 percent or so greater than the dc screen voltage. The latter, in turn, is approximately half the rated screen voltage recommended by the manuafacturer under maximum ratings for radiotelegraph operation.

The audio power required for 100-percent modulation is approximately one-fourth the dc power input to the screen in cw operation, but varies somewhat with the operating conditions. A receiving-type audio power amplifier will suffice as the modulator for most transmitting tubes. The relationship between screen voltage and screen current is not linear, which means that the load on the modulator varies over the audio-frequency cycle. It is therefore highly advisable to use negative feedback in the modulator circuit. If excess audio power is available, it is also advisable to load the modulator with a resistance (R in Fig. 12-8), its value being adjusted to dissipate the excess power. There is no simple way to determine the proper resistance except experimentally, by observing its effect on the modulation envelope with the aid of an oscilloscope.

On the assumption that the modulator will be fully loaded by the screen plus the additional load resistor R, the turns ratio required in the coupling transformer may be calculated as follows:

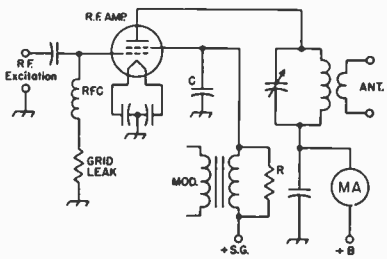

Fig. 12-8 – Screen-grid modulation of beam tetrode. Capacitor C is an rf bypass capacitor and should have high reactance of audio frequencies. A value of .002 μF is satisfactory. The grid leak can have the same value that is used for cw operation of the tube.

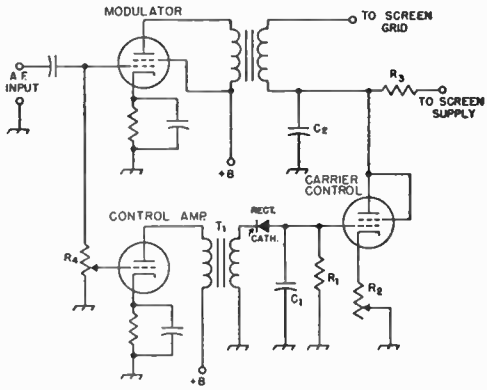

Fig. 12-9 — Circuit for carrier control with screen modulation. A small triode such as the 6C4 can be used as the control amplifier and a 6Y6G is suitable as a carrier-control tube. T1 is an interstage audio transformer having a 1-to-1 or larger turns ratio. R4 is a 0.5-megohm volume control and also serves as the grid resistor for the modulator. A germanium diode may be used as the rectifier. Other values are discussed in the text.

$$N = \frac{E_d}{2.5\sqrt{PR_L}}$$

where N is the turns ratio, secondary to primary; E_d is the rated screen voltage for cw operation; P is the rated audio power output of the modulator; and R_L is the rated load resistance for the modulator.

Controlled Carrier

As explained earlier, a limit is placed on the output obtainable from a grid-modulation system by the low rf-amplifier plate efficiency (approximately 33 percent) under unmodulated carrier conditions. The plate efficiency increases with modulation, since the output increases while the dc input remains constant, and reaches a maximum in the neighborhood of 50 percent with 100-percent sine-wave modulation. If the power input to the amplifier can be reduced during periods when there is little or no modulation, thus reducing the plate loss, advantage can be taken of the higher efficiency at full modulation to obtain higher effective output. This can be done by varying the dc power input to the modulated stage in accordance with *average* variations in voice intensity, in such a way as to maintain just sufficient carrier power to keep the modulation high, but not exceeding 100 percent, under all conditions. Thus the carrier amplitude is controlled by the average voice intensity. Properly utilized, controlled carrier permits increasing the carrier output at maximum level to a value about equal to the rated plate dissipation of the tube, twice the output obtainable with constant carrier.

It is desirable to control the power input just enough so that the plate loss, without modulation, is safely below the tube rating. Excessive control is disadvantageous because the distant receiver's avc system must continually follow the variations in average signal level. The circuit of Fig. 12-9 permits adjustment of both the maximum and minimum power imput, and although somewhat more complicated than some circuits that have been used is actually simpler to operate because it separates the functions of modulation and carrier control. A portion of the audio voltage at the modulator grid is applied to a Class A "control amplifier," which drives a rectifier circuit to produce a dc voltage negative with respect to ground. C1 filters out the audio variations, leaving a dc voltage proportional to the average voice level. This voltage is applied to the grid of a "clamp" tube to control the dc screen voltage and thus the rf carrier level. Maximum output is obtained when the carrier-control tube grid is driven to cut off, the voice level at which this occurs being determined by the setting of R4. The input without modulation is set to the desired level (usually about equal to the plate dissipation rating of the modulated stage) by adjusting R2. R3 may be the normal screen dropping resistor for the modulated beam tetrode, but in case a separate screen supply is used the resistance need be just large enough to give sufficient voltage drop to reduce the no-modulation power input to the desired value. C1,R1 and C2,R3 should have a time constant of about 0.1 second.

AMPLITUDE MODULATORS AND THEIR DRIVERS

AUDIO AMPLIFIERS

The audio amplifiers used in radiotelephone transmitters operate on the principles outlined earlier in this book in the chapter on vacuum tubes. The design requirements are determined principally by the type of modulation system to be used and by the type of microphone to be employed.

In voice communication the primary objective is to obtain the most *effective* transmission; i.e., to make the message be understood at the receiving point in spite of adverse conditions created by noise and interference. The methods used to accomplish this do not necessarily coincide with the methods used for other purposes, such as the reproduction of music or other program material. In other words, "naturalness" in reproduction is distinctly secondary to intelligibility.

The fact that satisfactory intelligibility can be maintained in a relatively narrow band of frequencies is particularly fortunate, because the width of the channel occupied by a phone transmitter is directly proportional to the width of the audio-frequency band. If the channel width is reduced, more stations can occupy a given band of frequencies without mutual interference.

In speech transmission, amplitude distortion of the voice wave has very little effect on intelligibility. The importance of such distortion in communication lies almost wholly in the fact that many of the audio-frequency harmonics caused by distortion lie outside the channel needed for intelligible speech, and thus will create unnecessary interference to other stations.

CLASS AB AND B MODULATORS

Class AB or B modulator circuits are basically identical no matter what the power output of the modulator may be. The diagrams of Fig. 12-10 therefore will serve for any modulator of this type. The triode circuit is given at A and the circuit for tetrodes at B. When small tubes with indirectly heated cathodes are used, the cathodes should be connected to ground.

Modulator Tubes

The pair of tubes used for modulators must be capable of delivering sine-wave audio power equal to somewhat more than half the dc input to the modulated Class C amplifier. It is sometimes convenient to use tubes that will operate at the same plate voltage as that applied to the Class C stage, because one power supply of adequate current capacity may then suffice for both stages.

Matching to Load

In giving audio ratings on power tubes, manufacturers specify the plate-to-plate load impedance into which the tubes must operate to deliver the rated audio power output. This load impedance seldom is the same as the modulating impedance of the Class C rf stage, so a match must be brought about by adjusting the turns ratio of the coupling transformer. The required turns ratio, primary to secondary, is

$$N = \sqrt{\frac{Z_p}{Z_m}}$$

where N = Turns ratio, primary to secondary
Z_m = Modulating impedance of Class C rf amplifier
Z_p = Plate-to-plate load impedance for Class B tubes

Example: The modulated rf amplifier is to operate at 1250 volts and 30 mA. The power input is

$$P = EI = 1250 \times 0.3 = 375 \text{ watts}$$

so the modulating power required is 375/2 = 188 watts. Increasing this by 25 percent to allow for losses and a reasonable operating margin gives 188 × 1.25 = 236 watts. The modulating impedance of the Class C stage is

$$Z_m = \frac{E}{I} = \frac{1250}{0.3} = 4167 \text{ ohms.}$$

From the *RCA Transmitting Tube Manual* a pair of 811As at 1250 plate volts will deliver 235 watts to a load of 12,400 ohms, plate-to-plate. The primary-to-secondary turns ratio of the modulation transformer therefore should be

$$\sqrt{\frac{Z_p}{Z_m}} = \sqrt{\frac{12{,}400}{4170}} = \sqrt{2.91} = 1.72:1$$

Many modulation transformers are provided with primary and secondary taps, so that various turns ratios can be obtained to meet the requirements of particular tube combinations. However, it may be that the exact turns ratio required cannot be secured, even with a tapped modulation transformer. *Small* departures from the proper turns ratio will have no serious effect if the modulator is operating well within its capabilities; if the actual turns ratio is within 10 percent of the ideal value, the system will operate satisfactorily. Where the discrepancy is larger, it is usually possible to choose a new set of operating conditions for the Class C stage to give a modulating impedance that can be matched by the turns ratio of the available transformer. This may require operating the Class C amplifier at higher voltage and less plate current, if the modulating impedance must be increased, or at lower voltage and higher current if the modulating impedance must be decreased. However, this process cannot be carried very far without exceeding the ratings of the Class C tubes for either plate voltage or plate current, even though the power input is kept at the same figure.

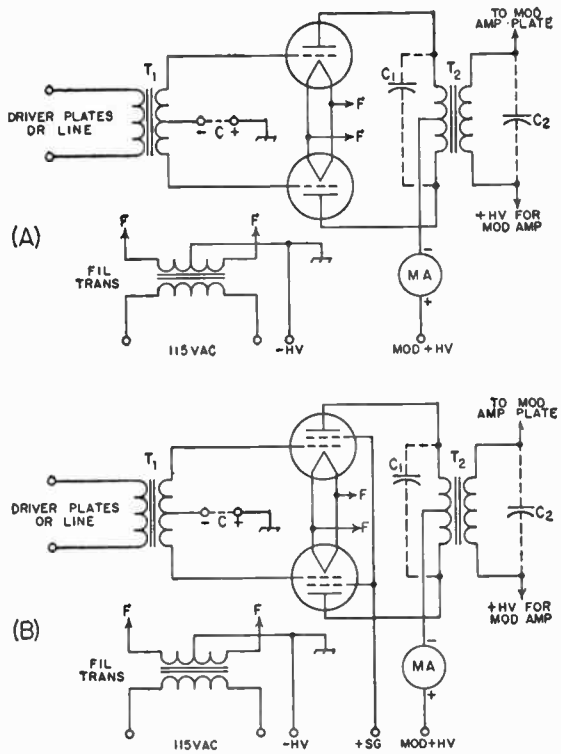

Fig. 12-10 — Amplitude-modulator circuit diagrams. Tubes and circuit considerations are discussed in the text.

Suppressing Audio Harmonics

Distortion in the driver or modulator will cause af harmonics that may lie outside the desired frequency band for intelligible speech. Capacitors

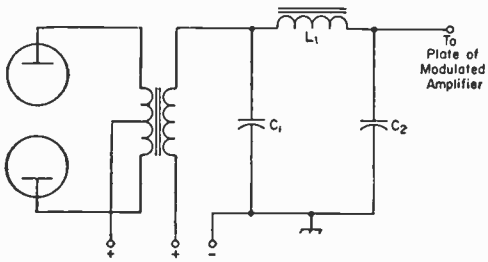

Fig. 12-11 — Splatter-suppression filter for use at high level.

C1 and C2 of Fig. 12-10 reduce the strength of the hf components in the modulation by acting with the leakage inductance of the transformer windings to form a simple low-pass filter. The values depend upon the load impedance of the Class C amplifier. The capacitors will usually be between .001 and .01 μF. The large values will be used when low values of load resistance are encountered. A better arrangement is to use a low-pass filter at the output of the modulator, Fig. 12-11.

Grid Bias

Some triode modulator tubes operate at zero grid bias. Others, pentodes and triodes, require a specific value of fixed bias. An ac-operated bias supply is used with most modern circuits. Examples of bias supplies are given in Chapter 5. The bias supply should be fairly "stiff" (10 percent regulation or better) for best operation. A regulated bias supply is recommended where large amounts of grid current flow.

Plate Supply

As is true of the modulator's bias supply, the plate-voltage supply should have good regulation. If the regulation is such that a significant voltage drop occurs at peak plate current, the lowest voltage figure is that which must be used when calculating the modulator power input.

Good dynamic regulation – i.e., with suddenly applied loads – is equally important as is true of linear rf amplifiers. An instantaneous drop in supply voltage on voice peaks will limit the output and cause distortion. The output capacitor of the power supply should be as large as practical to assure good dynamic regulation. The use of silicon rectifiers is also desirable to minimize voltage drop in that part of the supply. The screen supply of AB_2 modulators should be well regulated also and should be set near the value recommended (but not higher) for the tubes used.

Load Precautions

Excitation should never be applied to a modulator until the final amplifier of the transmitter is turned on and operating into a proper load. With no load to absorb the power, the primary impedance of the transformer rises to a high value, permitting peak voltages high enough to break down the transformer insulation.

DRIVERS FOR CLASS-B MODULATORS

Class AB_2 and Class B amplifiers are driven into the grid-current region, so power is consumed in the grid circuit. The preceding stage or driver must be capable of supplying this power at the required peak audio-frequency grid-to-grid voltage. Both of these quantities are given in the manufacturer's tube ratings. The grids of the Class B tubes represent a varying load resistance over the audio-frequency cycle, because the grid current does not increase directly with the grid voltage. To prevent distortion, therefore, it is necessary to have a driving source that will maintain the wave form of the signal without distortion even though the load varies. That is, the driver stage must have good regulation. To this end, it should be capable of delivering somewhat more power than is consumed by the Class B grid.

Driver Tubes

To secure good voltage regulation the internal impedance of the driver, as seen by the modulator grids, must be low. The principal component of this impedance is the plate resistance of the driver tube or tubes as reflected through the driver transformer. Hence for low driving-source impedance the effective plate resistance of the driver tubes should be low and the turns ratio of the driver transformer, primary to secondary, should be as large as possible. The maximum turns ratio that can be used is that value which just permits developing the modulator grid-to-grid af voltage required for the desired power output. The rated tube output should be reduced by about 20 percent to allow for losses in the Class B input transformer.

Low-μ triodes such as the 6CK4 have low plate resistance and are therefore good tubes to use as drivers for Class AB_2 or Class B modulators. Tetrodes such as the 6V6 and 6L6 make very poor drivers in this respect when used without negative feedback, but with such feedback the effective plate resistance can be reduced to a value comparable with low-μ triodes.

If the amplifier operates Class A in a push-pull driver stage using cathode bias, the cathode resistor need not be bypassed, because the af currents from each tube flowing in the cathode resistor are out of phase and cancel each other. However, in Class AB operation this is not true; considerable distortion will be generated at high signal levels if the cathode resistor is not bypassed.

Fig. 12-12 is a typical circuit for a speech amplifier suitable for use as a driver for a Class AB_2 or Class B modulator. An output of about 10 watts can be realized with the power supply circuit shown (or any similar well-filtered supply delivering 300 volts under load). This is sufficient for driving any of the power triodes commonly used as modulators. The 6CK4s in the output stage are operated Class AB_1. The circuit provides several

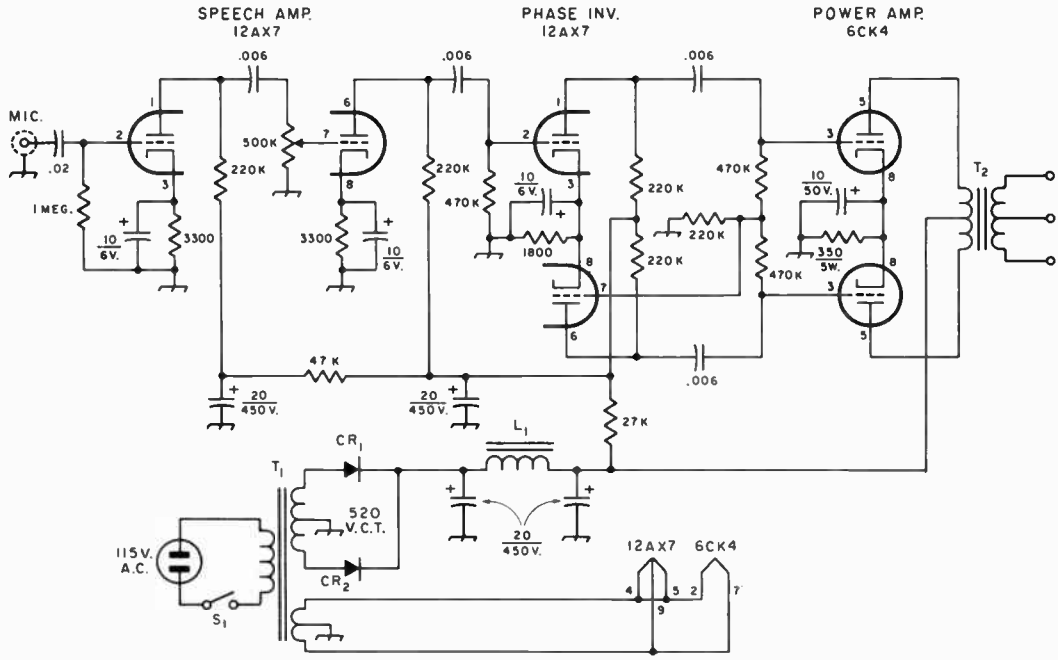

Fig. 12-12 — Typical speech-amplifier driver for 5- to 10-watts output. Capacitances are in μF. Resistors are 1/2 watt unless specified otherwise. Capacitors with polarity indicated are electrolytic.

CR1, CR2 — Silicon diode, 800 PIV.
L1 — 10-H, 110-mA filter choke.
T2 — Class B driver transformer, 3000 ohms plate-to-plate; secondary impedance as required by Class B tubes used; 15-watt rating.
T1 — Power transformer, 520 volts ct, 90 mA, 6.3 volts; 3 A.

times the voltage gain needed for crystal or ceramic microphones.

The two sections of a 12AX7 tube are used in the first two stages of the amplifier. These are resistance coupled, the gain control being in the grid circuit of the second stage.

The third stage uses a medium-μ triode which is coupled to the 6CK4 grids through a transformer having a push-pull secondary. The ratio may be of the order of 2 to 1 (total secondary to primary) or higher; it is not critical since the gain is sufficient without a high step-up ratio.

The turns ratio of transformer T2, for the primary to one-half secondary, is approximated by

$$N = \sqrt{\frac{PZ}{0.35\ E_s}}$$

where P = Driving power required by modulator tubes
Z = Plate load impedance of driver tube(s)
E_s = Peak grid-to-grid voltage for driven tubes

(This approximation is useful for any driver tube, or tubes, driving Class AB_2 or Class B modulators. Select driver tube(s) capable of delivering 1 1/2 times the grid-driving power required.)

In the case of AB_1, 6CK4s with fixed bias and 300 plate volts, Z = 3000 ohms. Grid bias for the 6CK4s is furnished by a separate supply using a silicon rectifier and a TV "booster" transformer, T4. The bias should be set to −62 volts or to obtain a total plate current of 80 mA.

DOUBLE-SIDEBAND GENERATORS

The a-m carrier can be suppressed or nearly eliminated by using a balanced modulator. The basic principle in any balanced modulator is to introduce the carrier in such a way that it does not appear in the output but so that the sidebands will. This requirement is satisfied by introducing the audio in push-pull and the rf drive in parallel, and connecting the output in push-pull. Balanced modulators can also be connected with the rf drive and audio inputs in push-pull and the output in parallel with equal effectiveness.

Vacuum-tube balanced modulators can be operated at high power levels and the double-sideband output can be used directly into the antenna. Past issues of *QST* have given construction details on such transmitters (see, for example, Rush,

"180-Watt D.S.B. Transmitter," *QST* July, 1966). A dsb signal can be copied by the same methods that are used for single-sideband signals, provided the receiver has sufficient selectivity to reject one of the sidebands. In any balanced-modulator circuit, no rf output will exist with no audio signal. When audio is applied, the balance of the modulator is upset so that sum and difference frequencies (sidebands) appear at the output. Further information on balanced modulators is presented in Chapter 13.

CHECKING A-M PHONE OPERATION

USING THE OSCILLOSCOPE

Proper adjustment of a phone transmitter is aided immeasurably by the oscilloscope. The scope will give more information, more accurately, than almost any collection of other instruments that might be named. Furthermore, an oscilloscope that is entirely satisfactory for the purpose is not necessarily an expensive instrument; the cathode-ray tube and its power supply are about all that are needed. Amplifiers and linear sweep circuits are by no means necessary.

In the simplest scope circuit, radio-frequency voltage from the modulated amplifier is applied to the vertical deflection plates of the tube, usually through blocking capacitors, and audio-frequency voltage from the modulator is applied to the horizontal deflection plates. As the instantaneous amplitude of the audio signal varies, the rf output of the transmitter likewise varies, and this produces a wedge-shaped pattern or trapezoid on the screen. If the oscilloscope has a built-in horizontal sweep, the rf voltage can be applied to the vertical plates as before, and the sweep will produce a pattern that follows the modulation envelope of the transmitter output, provided the sweep frequency is lower than the modulation frequency. This produces a wave-envelope modulation pattern.

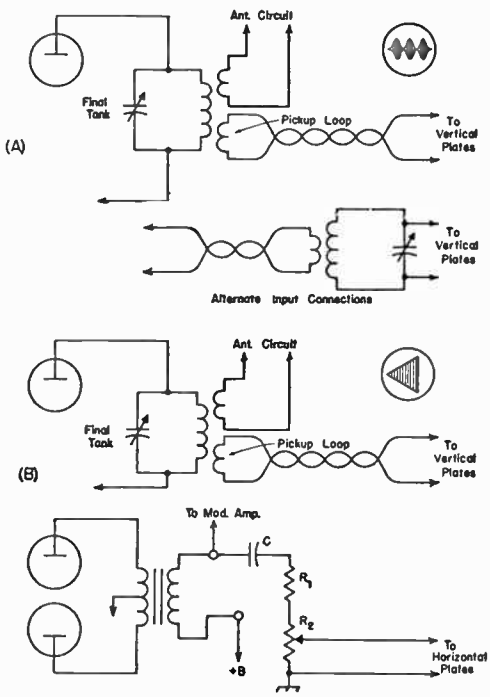

Fig. 12-13 — Methods of connecting the oscilloscope for modulation checking. A — connections for wave-envelope pattern with any modulation method; B — connections for trapezoidal pattern with plate or screen modulation.

The Wave-Envelope Pattern

The connections for the wave-envelope pattern are shown in Fig. 12-13A. The vertical deflection plates are coupled to the amplifier tank coil (or an antenna coil) through a low-impedance (coax, twisted pair, etc.) line and pickup coil. As shown in the alternative drawing, a resonant circuit tuned to the operating frequency may be connected to the vertical plates, using link coupling between it and the transmitter. This will eliminate rf harmonics, and the tuning control provides a means for adjustment of the pattern height.

If it is inconvenient to couple to the final tank coil, as may be the case if the transmitter is tightly shielded, the pickup loop may be coupled to the tuned tank of a matching circuit or antenna coupler. Any method (even a short antenna coupled to the tuned circuit shown in the "alternate input connections" of Fig. 12-13A) that will pick up enough rf to give a suitable pattern height may be used.

The position of the pickup coil should be varied until an unmodulated carrier pattern, Fig. 12-14B, of suitable height is obtained. The horizontal sweep voltage should be adjusted to make the width of the pattern somewhat more than half the diameter of the screen. When voice modulation is applied, a rapidly changing pattern of varying height will be obtained. When the maximum height of this pattern is just twice that of the carrier alone, the wave is being modulated 100 percent. This is illustrated by Fig. 12-14D, where the point X represents the horizontal sweep line (reference line) alone, YZ is the carrier height, and PQ is the maximum height of the modulated wave.

If the height is greater than the distance PQ, as illustrated in E, the wave is overmodulated in the upward direction. Overmodulation in the downward direction is indicated by a gap in the pattern at the reference axis, where a single bright line appears on the screen. Overmodulation in either direction may take place even when the modulation in the other direction is less than 100 percent.

The Trapezoidal Pattern

Connections for the trapezoid or wedge pattern as used for checking a-m are shown in Fig. 12-13B. The vertical plates of the CR tube are coupled to the transmitter tank through a pickup loop, preferably using a tuned circuit, as shown in the upper drawing, adjustable to the operating frequency. Audio voltage from the modulator is applied to the horizontal plates through a voltage divider, R1-R2. This voltage should be adjustable so a suitable pattern width can be obtained; a 0.25-megohm volume control can be used at R2 for this purpose.

The resistance required at R1 will depend on the dc voltage on the modulated element. The total resistance of R1 and R2 in series should be about 0.25 megohm for each 100 volts. For example, if a plate-modulated amplifier operates at 1500 volts, the total resistance should be 3.75 megohms, 0.25 megohm at R2 and the remainder, 3.5 megohms, in R1. R1 should be composed of individual resistors not larger than 0.5 megohm each, in which case 1-watt resistors will be satisfactory.

For adequate coupling at 100 Hz, the capacitance in microfarads of the blocking capacitor, C, should be at least .05/R, where R is the total resistance (R1 + R2) in megohms. In the example above, where R is 3.75 megohms, the capacitance should be 0.05/3.75 = .013 μF or more. The voltage rating of the capacitor should be at least twice the dc voltage applied to the modulated element.

Trapezoidal patterns for various conditions of modulation are shown in Fig. 12-14 at F to J, each alongside the corresponding wave-envelope pattern. With no signal, only the cathode-ray spot appears on the screen. When the unmodulated carrier is applied, a vertical line appears; the length of the line should be adjusted, by means of the pickup-coil coupling, to a convenient value. When the carrier is modulated, the wedge-shaped pattern appears; the higher the modulation percentage, the wider and more pointed the wedge becomes. At 100-percent modulation it just makes a point on the axis, X, at one end, and the height, PQ, at the other end is equal to twice the carrier height, YZ. Overmodulation in the upward direction is indicated by increased height over PQ, and downward by an extension along the axis X at the pointed end.

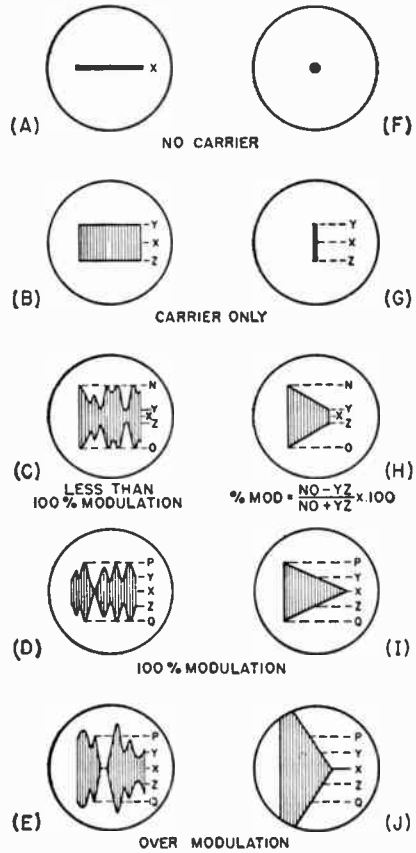

Fig. 12-14 — Wave-envelope and trapezoidal patterns representing different conditions of modulation.

CHECKING A-M TRANSMITTER PERFORMANCE

The trapezoidal pattern is generally more useful than the wave-envelope pattern for checking the operation of the phone transmitter. However, both types of patterns have their special virtues, and the best test setup is one that makes both available. The trapezoidal pattern is better adapted to showing the performance of a modulated amplifier from the standpoint of inherent linearity, without regard to the wave form of the audio modulating signal, than is the wave-envelope pattern. Distortion in the audio signal also can be detected in the trapezoidal pattern, although experience in analyzing scope patterns is required to recognize it.

If the wave-envelope pattern is used with a sine-wave audio modulating signal, distortion in the modulation envelope is easily recognizable; however, it is difficult to determine whether the distortion is caused by lack of linearity of the rf stage or by af distortion in the modulator. If the trapezoidal pattern shows good linearity in such a case, the trouble obviously is in the audio system. It is possible, of course, for both detects to be present simultaneously. If they are, the rf amplifier should be made linear first; then any distortion in the modulation envelope will be the result of improper operation in the speech amplifier or modulator, or in coupling the modulator to the modulated rf stage.

Rf Linearity

The trapezoidal pattern is a graph of the modulation characteristic of the modulated amplifier. The sloping sides of the wedge show the rf amplitude for every value of instantaneous

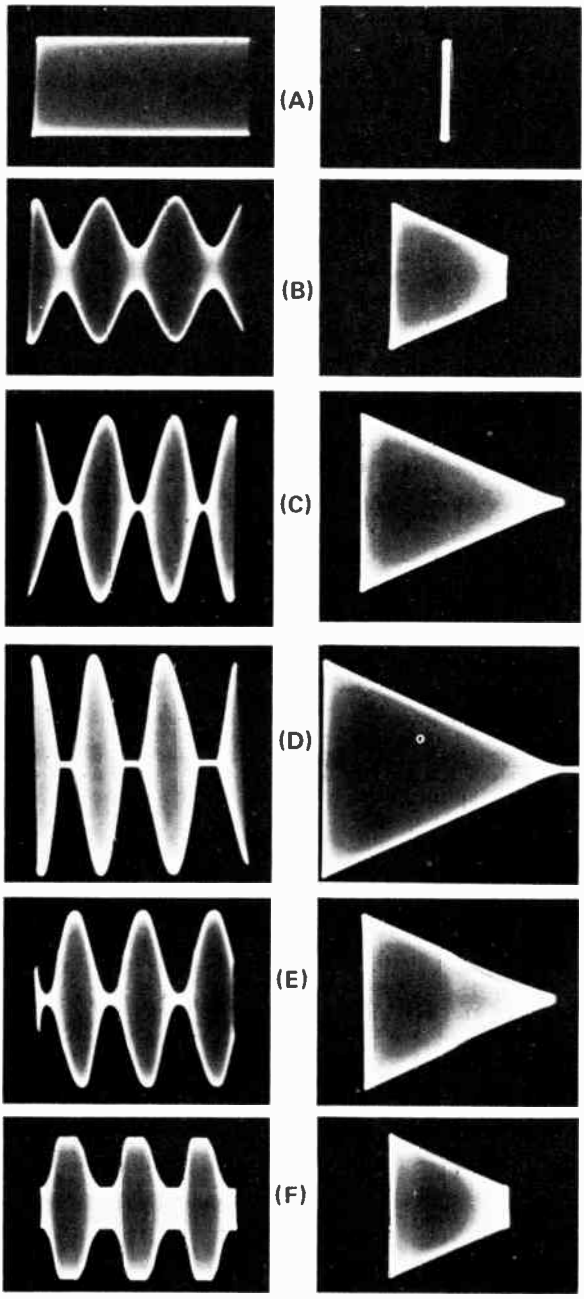

Fig. 12-15 — Oscilloscope patterns showing various forms of modulation of an rf amplifier. At left, wave-envelope patterns; at right, corresponding trapezoidal patterns. The wave-envelope patterns were obtained with a linear oscilloscope sweep having a frequency one-third that of the sine-wave audio modulating frequency, so that three cycles of the modulation envelope may be seen. Shown at A is an unmodulated carrier, at B approximately 50-percent modulation, and at C, 100-percent modulation. The photos at D show modulation in excess of 100 percent. E and F show the results of improper operation or circuit design. See text.

modulating voltage. If these sides are perfectly straight lines, as drawn in Fig. 12-14 at H and I, the modulation characteristic is linear. If the sides show curvature, the characteristic is nonlinear to an extent shown by the degree to which the sides depart from perfect straightness. This is true regardless of the modulating wave form.

Audio Distortion

If the speech system can be driven by a good audio sine-wave signal instead of a microphone, the trapezoidal pattern also will show the presence of even-harmonic distortion (the most common type, especially when the modulator is overloaded) in the speech amplifier or modulator. If there is no distortion in the audio system, the trapezoid will extend horizontally equal distances on each side of the vertical line representing the unmodulated carrier. If there is even-harmonic distortion the trapezoid will extend farther to one side of the unmodulated-carrier position than to the other. If this occurs, the probable cause is inadequate power output from the modulator, or incorrect load on the modulator.

An audio oscillator having reasonably good sine-wave output is highly desirable for testing both speech equipment and the phone transmitter as a whole. With an oscillator and the scope, the pattern is steady and can be studied closely to determine the effects of adjustments.

In the case of the wave-envelope pattern, distortion in the audio system will show up in the modulation envelope (with a sine-wave input signal) as a departure from the sine wave form, and may be checked by comparing the envelope with a drawing of a sine wave. Attributing any such distortion to the audio system assumes, of course, that a check has been made on the linearity of the modulated rf amplifier, preferably by use of the trapezoidal pattern.

Typical Patterns

Fig. 12-15 shows various scope patterns of modulated signals for different conditions of operation. The pattern to be sought in adjusting the transmitter is the one shown at C, where the top and bottom edges of the trapezoid continue in straight lines up to the point representing 100-percent modulation. If these edges tend to bend over toward the horizontal at the maximum height of the wedge, the amplifier is "flattening" on the modulation uppeaks. This is usually caused by attempting to get too large a carrier output, and can be corrected by tighter coupling to the antenna or by a decrease in the dc screen voltage. The slight "tailing off" at the modulation downpeak (point of the wedge) can be minimized by careful adjustment of excitation and plate loading.

Several types of improper operation are shown in Fig. 12-15. At D the linearity of the rf stage is good but the amplifier is being modulated over 100 percent. This is shown by the maximum height of the pattern (compare with the unmodulated carrier of A) and by the bright line extending from the point of the wedge (or between sections of the envelope).

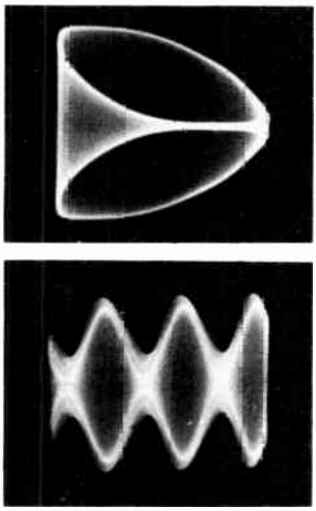

Fig. 12-16 — Upper photo — audio phase shift in coupling circuit between transmitter and horizontal deflection plates. Lower photo — hum on vertical deflection plates.

The patterns at E of Fig. 12-15 show the effect of a too long time constant in the screen circuit, in an amplifier getting its screen voltage through a dropping resistor, both plate and screen being modulated. The "double-edged" pattern is the result of audio phase shift in the screen circuit combined with varying screen-to-cathode resistance during modulation. The overall effect is to delay the rise in output amplitude during the upsweep of the modulation cycle, slightly distorting the modulation envelope as shown in the wave-envelope pattern. This effect, which becomes more pronounced as the audio modulating frequency is increased, is usually absent at low modulation percentages but develops rapidly as the modulation approaches 100 percent. It can be reduced by reducing the screen bypass capacitance, and also by connecting resistance (to be determined experimentally, but of the same order as the screen dropping resistance) between screen and cathode.

The pictures at the bottom, F, show the effect of insufficient audio power. Although the trapezoidal pattern shows good linearity in the rf amplifier, the wave-envelope pattern shows flattened peaks (both positive and negative) in the modulation envelope even though the audio signal applied to the amplifier was a sine wave. More speech-amplifier gain merely increases the flattening without increasing the modulation percentage in such a case. The remedy is to use a larger modulator or less input to the modulated rf stage. In some cases the trouble may be caused by an incorrect modulation-transformer turns ratio, causing the modulator to be overloaded before its maximum power output capabilities are reached.

Faulty Patterns

The pattern defects shown in Fig. 12-15 are only a few out of many that might be observed in the testing of a phone transmitter, all capable of being interpreted in terms of improper operation in some part of the transmitter. However, it is not always the transmitter that is at fault when the scope shows an unusual pattern. The trouble may be in some defect in the test setup.

Patterns representative of two common faults of this nature are shown in Fig. 12-16. The upper picture shows the trapezoidal pattern when the audio voltage applied to the horizontal plates of the CR tube is not exactly in phase with the modulation envelope. The normal straight edges of the wedge are transformed into ellipses which, in the case of 100-percent modulation as shown, touch at the horizontal axis and reach maximum heights equal to the height of the normal wedge at the modulation uppeak. Such a phase shift can occur (and usually will) if the audio voltage applied to the CR-tube deflection plates is taken from any point in the audio system other than where it is applied to the modulated rf stage. The coupling capacitor shown in Fig. 12-13B must have very low reactance compared with the resistance of R1 and R2 in series – not larger than a few percent of the sum of the two resistances.

The wave-envelope pattern in Fig. 12-16 shows the effect of hum on the vertical deflection plates. This may actually be on the carrier or may be introduced in some way from the ac line through stray coupling between the scope and the line or because of poor grounding of the scope, transmitter or modulator.

It is important that rf from the *modulated stage only* be coupled to the oscilloscope, and then only to the vertical plates. If rf is also present on the horizontal plates, the pattern will lean to one side instead of being upright. If the oscilloscope cannot be moved to a position where the unwanted pickup disappears, a small bypass capacitor (10 pF or more) should be connected across the horizontal plates, as close to the cathode-ray tube as possible. An rf choke (2.5 mH or smaller) may also be connected in series with the ungrounded horizontal plate.

GENERAL-PURPOSE AMPLITUDE MODULATORS

The two modulator circuits shown in Figs. 12-17 and 12-18 can be employed to deliver from 3 to 70 watts of audio power. The basic designs are taken from RCA's *Audio Design Phase 2*. The complementary-symmetry circuit, Fig. 12-17, is characterized by a Class A driver and a complementary pair (npn/pnp) of output transistors. The primary advantages of this circuit are simplicity and economy. Common conduction is minimized because the transistor which is "off" during half of the audio cycle is reverse biased. The output transistors are operated at zero bias,

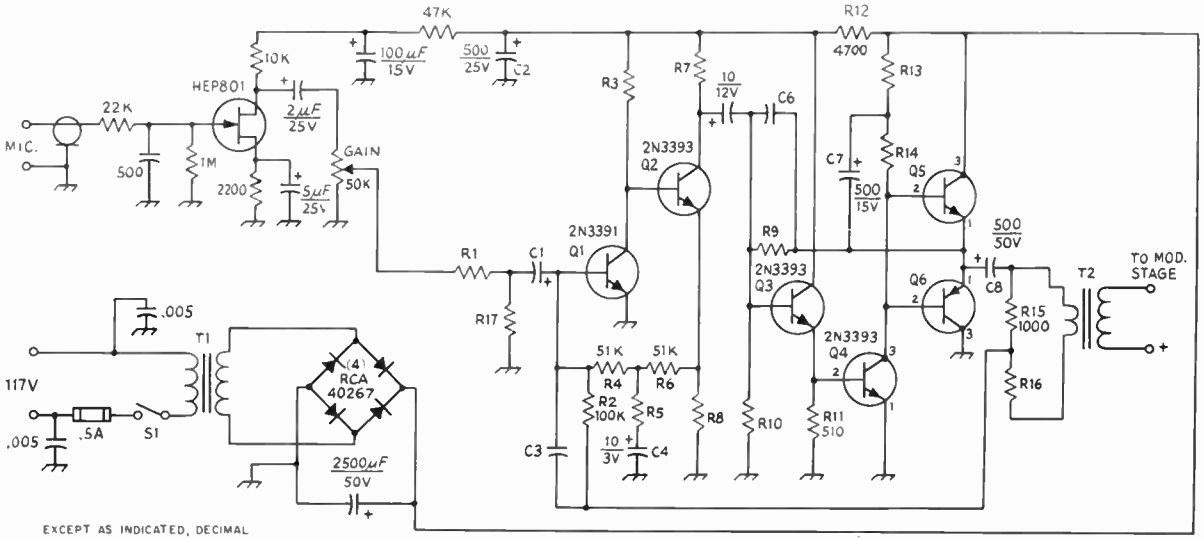

EXCEPT AS INDICATED, DECIMAL VALUES OF CAPACITANCE ARE IN MICROFARADS (µF), OTHERS ARE IN PICOFARADS (pF OR µµF); RESISTANCES ARE IN OHMS, K=1000, M=1000 000

Fig. 12-17 — General-purpose amplitude modulator for 3 to 20 watts of audio power. Capacitors with polarity indicated are electrolytic. See Table 12-I for parts not listed below.
S1 — Spst toggle.
T2 — See text.

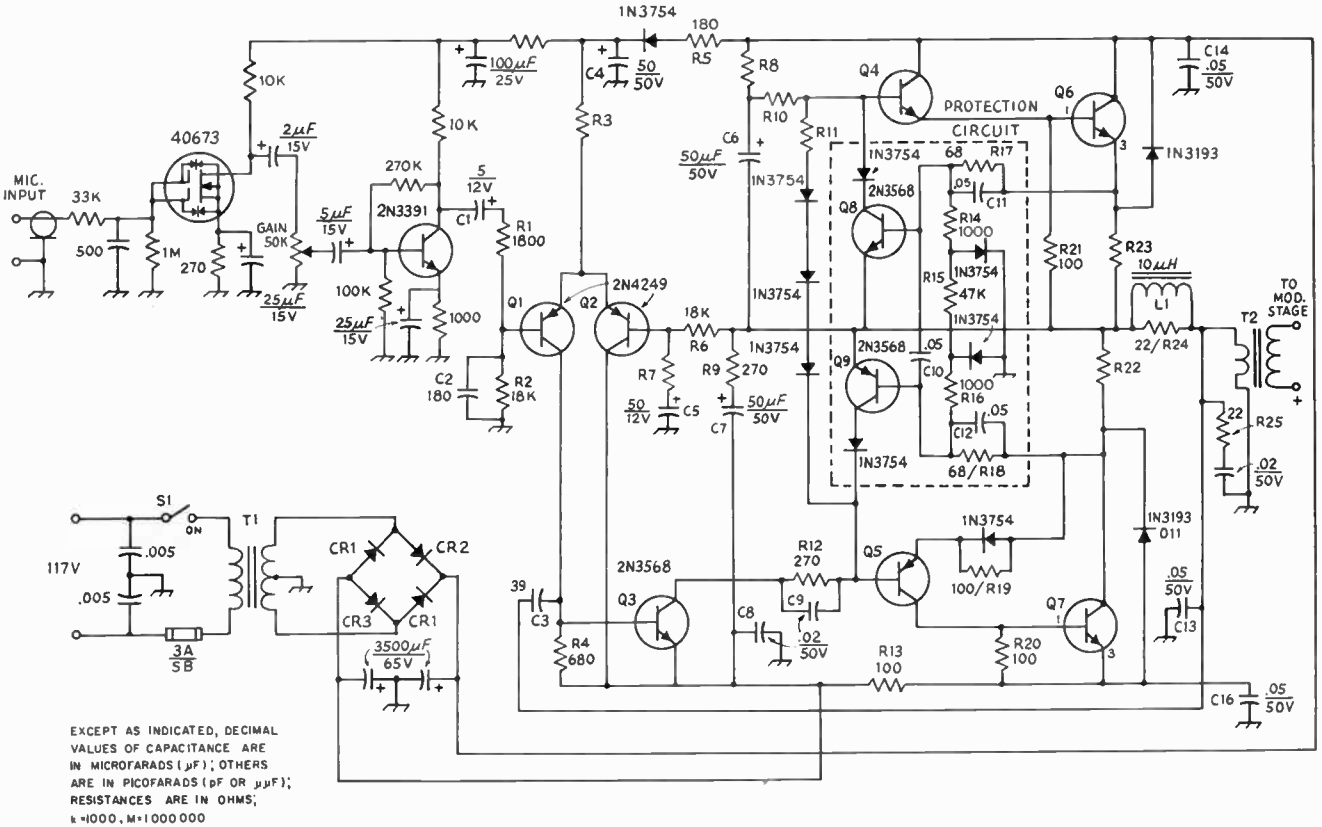

EXCEPT AS INDICATED, DECIMAL VALUES OF CAPACITANCE ARE IN MICROFARADS (μF); OTHERS ARE IN PICOFARADS (pF OR μμF); RESISTANCES ARE IN OHMS; k=1000, M=1000000

Fig. 12-18 — General-purpose amplitude modulator for 25 to 70 watts of audio power. Capacitors with polarity indicated are electrolytic. See Table 12-II for parts not listed below.
L1 — J. W. Miller 4622 or equiv.
S1 — Spst toggle.
T2 — See text.

TABLE 12-I

PARTS VALUES FOR COMPLEMENTARY – SYMMETRY CIRCUIT (Fig. 12-17)

Power (Watts)	R1	R3	R5	R7	R8	R9	R10	R13	R14	R16	R17	C1 µF	C3 pF	C6 pF	Q4	Q5	Q6	T1	
3	91k	68k	2.7k	3.9k	620	33k	5.6k	120	150	22	22k	0.1/6V	10	100	40611	40610	40609	15V, 1A	(Stancor TP-4)
5	51k	68k	3.3k	3.9k	620	27k	3.6k	110 (1W)	110 (1W)	27	22k	0.25/6V	5	150	40616	40615	40614	17V, 1A	(Stancor TP-4)
12	16k	91k	7.5k	2.7k	390	18k	1.8k	91 (2W)	91 (2W)	56		1/6V	10	220	40389	40622	40050	25V, 1A	(Stancor TP-4)
20	8.2k	91k	8.2k	2.2k	360	22k	1.3k	100 (2W)	100 (2W)	100		2/6V	10	270	40628	40627	40626	32V, 1A	(C. P. Elec. 10596)

providing excellent dc stability. Elaborate regulated power supplies are not required. The complementary-symmetry amplifier is limited to about 20 watts output because of the high level of heat that the driver stage must dissipate. Component values and transistor types are given in Table 12-I for 3-, 5-, 12-, and 20-watt designs.

For higher power levels, the quasi-complementary circuit (Fig. 12-18) is usually chosen. Here a Class A predriver feeds a Class B npn/pnp driver pair, which, in turn, activates the npn output transistors. The danger of damage to the output stage from a short circuit is high, so protection is included. Table 12-II includes parts information for three power levels: 25, 40, and 70 watts.

All amplifiers are designed for an 8-ohm output, so T2 can be a standard audio output transformer in "reverse." The secondary impedance will depend on the impedance of the stage to be modulated.

TABLE 12-II

PARTS VALUES FOR QUASI-COMPLEMENTARY-SYMMETRY CIRCUIT (Fig. 12-18)

Power (Watts)	R3	R7	R8	R10	R11	R22 R23	Q4	Q5	Q6 Q7	T1		
25	12k	680	1800	2200	270	0.43(5W)	2N3568	2N3638	40632	37V	1.5A	(C. P. Elec. 10596)
40	15k	560	2200	2700	390	0.39(5W)	40635	40634	40633	46V	2A	(C. P. Elec. 10596)
70	18k	470	2700	3300	470	0.33(5W)	40594	40595	40636	60V	2.5A	(C. P. Elec. 10598)

A 2-METER SOLID-STATE A-M TRANSCEIVER

This transceiver, originally described by W7HCV in *QST* for May, 1970, was designed to provide satisfactory communications at a range up to 200 miles with a portable 5-element Yagi antenna. Weight and size, including battery pack and accessories, were constrained to fit a small rucksack. The characteristics of this unit include: (1) 1/2- to 1-watt output, (2) VXO to allow some frequency excursion, (3) 40 hours of operation from 10 D-size Ni-cad batteries, (4) total weight including batteries less than 5 pounds, and (5) single-conversion, MOS front-end receiver for superior "cross-mod" and overload performance. These characteristics have been obtained with some special transistors and integrated circuits, but reasonably low-cost substitutes are now available (refer to parts list). Successful results are very dependent upon proper test equipment and procedures.

Fig. 12-19 – Front-panel view of the 2-meter sold-state a-m transceiver. The entire circuit is housed in a Simpson Model 260-style meter case. A homemade dial plate provides a frequency readout of 144 to 148 MHz.

Receiver Circuit

The receiver, shown schematically in Fig. 12-20, is a single-conversion, superhet with an i-f of

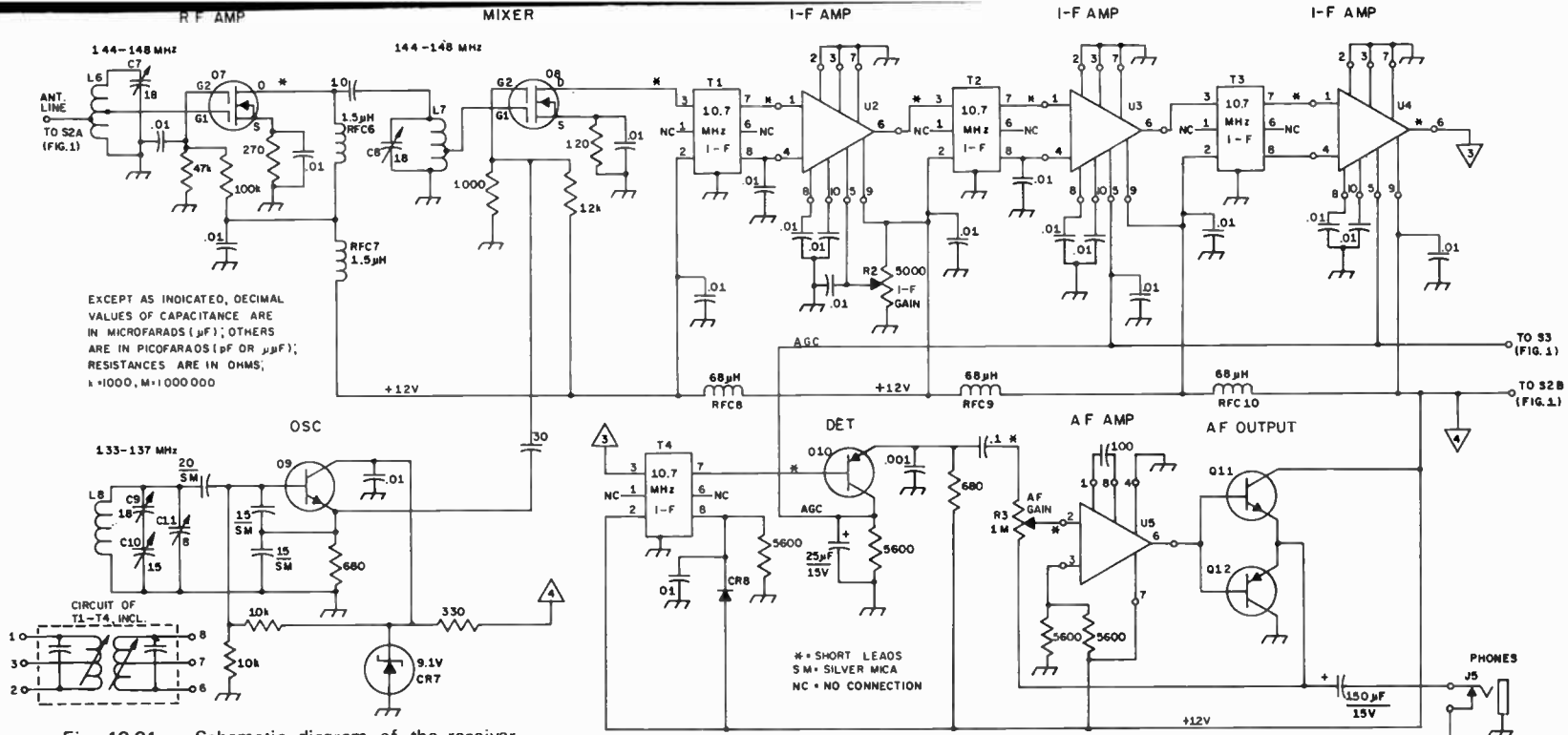

Fig. 12-21 — Schematic diagram of the receiver portion of the 2-meter transceiver. Fixed-value capacitors are disk ceramic unless otherwise noted. Fixed-value resistors are 1/4-watt composition unless otherwise indicated. Circuit leads marked with an asterisk should be kept very short to insure stability. Polarized capacitors are electrolytic. Base connections shown for the semiconductors apply only to those transistors specified as first choices, and not necessarily to those listed as substitutes.

C7, C8, C9 — 5.5-to-18-pF ceramic trimmer (Erie 538-COPO-92R or equivalent).

C10 — 15-pF variable (Johnson 167-1 or similar, suitable).

C11 — 2-to-8-pF ceramic trimmer (Erie 538-COPO-89R or similar).

CR7 — 9.1-volt reference Zener diode, 1N936 or equivalent.

J5 — Miniature phone jack.

L6 — 3 turns No. 16 bare wire, 3/8-inch OD, 1/2 inch long. Tap at 1 and 2 turns from ground end.

L7 — 3 turns No. 16 bare wire, 3/8-inch OD, 1/2 inch long. Tap at 1 1/2 turns from ground end.

L8 — 3 turns No. 16 bare wire, 3/8-inch OD, 1/2 inch long.

Q7 — RCA dual-gate MOSFET, 3N140.

Q8 — RCA dual-gate MOSFET, 3N141.

Q9 — Fairchild 2N3563 or equivalent.

Q10 — Fairchild 2N4258 or Motorola 2N3905 or 2N3906.

Q11 — Motorola 2N4921.

Q12 — Motorola 2N4918.

R2 — 5000-ohm linear-taper carbon control.

R3 — 1-megohm, audio-taper carbon control.

RFC6, RFC7 — 1.5-μH molded choke (J. W. Miller 9230-24).

RFC8-RFC10, incl. — 68-μH molded choke (J. W. Miller 9230-64).

T1-T4, incl. — 10.7-MHz i-f transformer (J. W. Miller 8851A).

U2-U4, incl. — Motorola IC MC1550G.

U5 — National Semiconductor IC LM301A or equiv. (Motorola MC1741CG suitable).

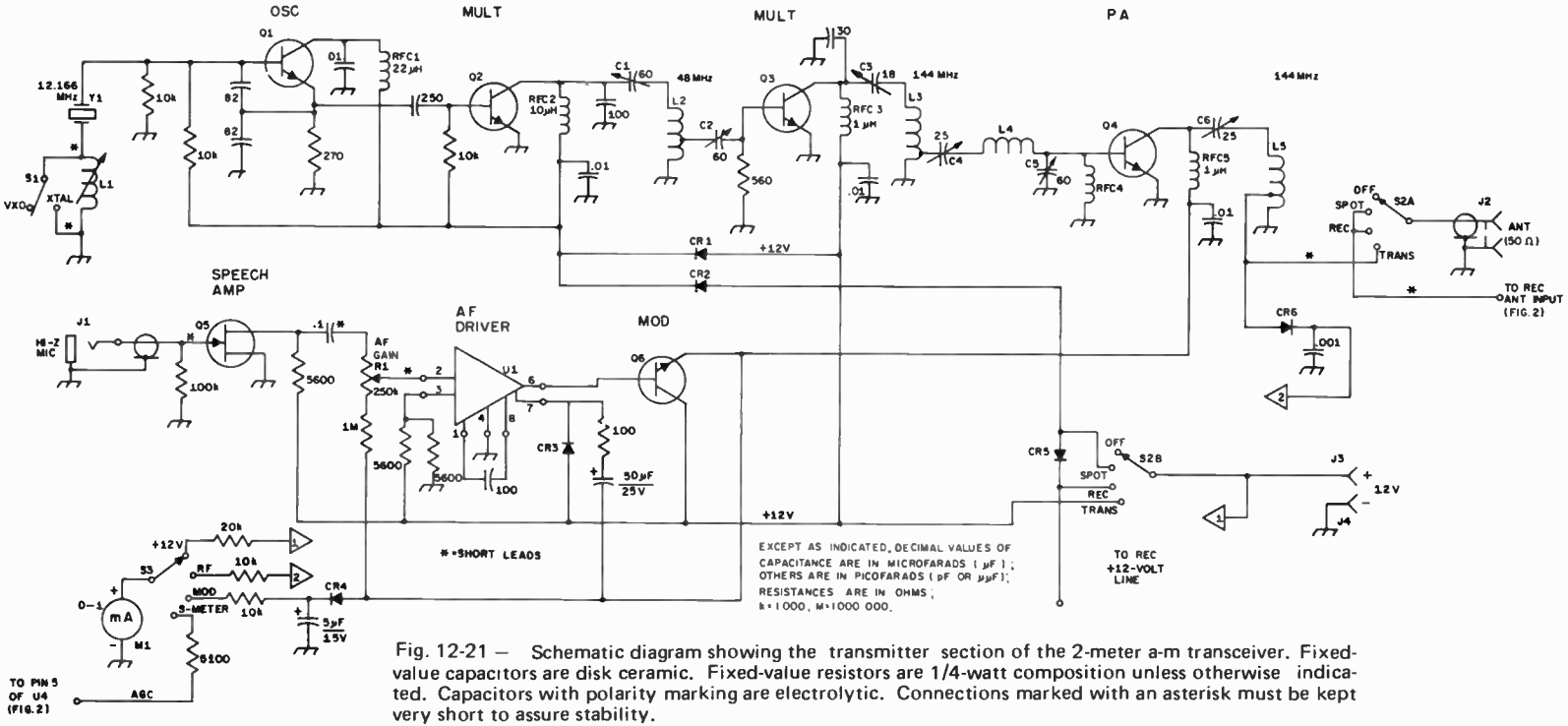

Fig. 12-21 — Schematic diagram showing the transmitter section of the 2-meter a-m transceiver. Fixed-value capacitors are disk ceramic. Fixed-value resistors are 1/4-watt composition unless otherwise indicated. Capacitors with polarity marking are electrolytic. Connections marked with an asterisk must be kept very short to assure stability.

C1, C2, C5 — 15-to-60-pF ceramic trimmer (Erie 538-P3PO-112R or similar).
C3 — 5.5-to-18-pF ceramic trimmer (Erie 538-COPO-92-R or equivalent).
C4, C6 — 8-to-25-pF ceramic trimmer (Erie 538-D2PO-99R or equivalent).
CR1, CR2, CR5 — 1-ampere, 50-PRV silicon diode (Motorola 1N4001 or similar).
CR3, CR4, CR6 — High-speed switching diode, silicon (1N914).
J1 — Miniature phone jack.
J2 — BNC-style chassis-mount coaxial connector, type UG-291/U.
J3, J4 — Insulated tip jacks or similar.
L1 — 45 turns No. 34 enam. wire, close-wound on 3/8-inch dia slug-tuned form (J. W. Miller 64A024-2 form suitable).
L2 — 10 turns No. 16 bare wire, 3/8-inch OD, 1 inch long. Tap 1 turn from ground end.
L3 — 3 turns No. 16 bare wire, 3/8-inch OD, 1/2 inch long.
L4 — 4 turns No. 16 bare wire, 3/8-inch OD, 1/2 inch long.
L5 — 5 turns No. 16 bare wire, 3/8-inch OD, 3/4 inch long.
M1 — 1-mA miniature dc meter, scale recalibrated to read 0 to 20.
Q1 — 2N3563 (Fairchild used in this equipment).
Q2, Q3 — PT-3500 (TRW Co.) preferred. Motorola 2N3866 or RCA 2N5109 also suitable.
Q4 — PT-3534 (TRW Co.) preferred. Motorola 2N3866 or RCA 2N5109 also suitable.
Q5 — Motorola 2N5457, 2N5459, or HEP-801 JFET.
Q6 — Motorola 2N4921.
R1 — 0.25-megohm linear-taper carbon control.
RFC1 — 22-µH molded choke (J. W. Miller 9320-52).
RFC2 — 10-µH molded choke (J. W. Miller 9310-36).
RFC3, RFC5 — 1-µH molded choke (J. W. Miller 9310-12).
RFC4 — 1.5-µH molded choke (J. W. Miller 9230-24).
S1 — Spst miniature toggle or slide switch.
S2 — 2-pole, 4-position, single-wafer rotary (Centralab 2011 or similar).
S3 — Single-pole, 4-position, single-wafer rotary (Centralab 2007 or equivalent).
U1 — National Semiconductor LM301A or equivalent (Motorola MC1741CG can be used). Also, LM201, µA709, or µA741 suitable.
Y1 — 12 to 12.333-MHz fundamental-cut crystal (International Crystal Co. type HC6/U).

10.7 MHz. Integrated circuits are used in the i-f and audio channels. The front end utilizes a 3N140 rf amplifier, and a 3N141 mixer, dual-gate MOSFET devices offering excellent overload and cross-modulation rejection characteristics with a fairly low noise figure, and a high unneutralized gain.

The rf amplifier is operated in the common-source mode; the mixer is operated in a similar configuration, but with the LO signal injected on gate 2. The injection is 1.5 to 2.0 volts peak-to-peak, as measured with a high-frequency oscilloscope and appropriate probe. This level provides a good compromise between cross-mod and gain. The local oscillator runs on 133 to 137 MHz and is a modification of the familiar Colpitts circuit known as the Seiler Oscillator. The i-f gain and agc voltage are provided by three Motorola MC1550G integrated circuits, while the selectivity is provided by the use of double-tuned interstage transformers. The transformers specified in the parts list yield a 3-dB selectivity of 25 kHz, with steep skirts. The i-f gain is 60 dB with 90-dB agc capability.

The MC1550G ICs operate as a cascode amplifier. This has the advantage that the input and output impedances are independent of agc voltage, thus preserving the selectivity of the i-f regardless of signal level. The 1550s operate with forward agc voltage. That is, as the agc voltage is increased from zero to plus 5 volts, the gain drops. Since the i-f amplifier has more than the necessary gain, the first stage is manually adjusted to a low gain. This stage could be eliminated and cascaded i-f transformers used instead.

A-m detection and agc voltage generation are done by the 2N4258, Q10 (Fig. 12-20), at the i-f output. The emitter-base diode is the a-m detector with the audio taken off the emitter. Current generated by detection action is amplified in the base-collector circuit and changed into agc voltage across the 5600-ohm emitter resistor. The agc has fast attack, with decay determined by the 25-μF filter capacitor.

Audio amplification is provided by another integrated circuit, U5, and complementary push-pull output stage, Q11-Q12. Distortion is minimized by negative feedback which also controls the audio gain. Idling current is less than 5 mA, and the amplifier can deliver 1-watt rms into an 8-ohm load.

Transmitter Circuit

The rf chain consists of only four stages: a 12-MHz oscillator, a quadrupler, a tripler, and a collector-modulated final. The chain starts with a variable crystal oscillator (VXO). The circuit of Fig. 12-21 yields a Δf of 50 kHz at 12 MHz when using plated crystals. This gives a Δf of 600 kHz at 144 MHz. The VXO crystal operates in the series-resonant mode. The frequency is pulled down (from the marked frequency) by adding inductance. Because no external capacitor is added, stray resonances which normally limit the excursion are avoided. Even at maximum pull, stability has been sufficient from 2-meter a-m work.

Frequency multiplication is done in only two stages. The method used for interstage impedance matching leads to stability by providing a high-Q tank circuit with a tapped capacitance instead of the more common tapped inductance. This eliminates any need for bypassing the cold end of the tank circuit. Drive to the following stage could be taken directly off a tap near the cold end of the tank inductor.

The final amplifier uses a T.R.W. PT-3534 transistor which delivers 10-dB gain with only 6 volts Vcc. Such a microwave device is expensive and the RCA 2N5109 or Motorola 2N3866 are suitable low-cost alternatives. The emitter of the PA transistor should be grounded with as short a lead as possible.

The transmitter modulator starts with an MPF103 speech amplifier intended for high-impedance microphones. The JFET drives an operational-amplifier integrated circuit which drives the output emitter follower. As in the receiver audio, negative feedback is used to minimize distortion and to control the gain. A diode and R-C network are used to "bootstrap" the operational-amplifier supply voltage which allows full power supply swing on the modulator transistor. Bootstrapping could also be applied in the negative direction. The modulator will swing from 1 volt to 12 volts with loads as low as 25 ohms.

Four significant items are metered in the transceiver using a miniature 1-mA meter. Battery-voltage monitoring is vital when Ni-cads are used, to prevent destructive extended discharge. Relative rf output and peak modulation voltage are monitored by switching S3. Another position monitors the agc voltage, which serves as a tuning indicator, or so-called S meter.

Mechanical Layout and Constructional Details

All the circuit is laid out on single-sided copper clad Vector board with holes on 0.2-inch centers in a square grid pattern. Vector type T-28 pins are used for component mounting. Fig. 12-22 is a photograph of the circuit board, and shows the relative placement of the components: modulator across the top, receiver down the left side, LO in the center, and transmitter along the right side, with the VXO at the bottom. The PA is to the right of the antenna switch wafer. The board is mounted about one inch behind the front panel to allow clearance for the meter, meter switch, function switch, tuning capacitor, speaker, and various controls. Power interconnections, speaker, volume control, microphone, and i-f transformer wiring was done on the copper side of the board. The local-oscillator tuning capacitor and coil were deliberately placed between the board and front panel to take advantage of the shielding thereby provided.

Note that no heat sinks are used on the audio output or modulator transistors. Power types were chosen only to get good high-current beta which is

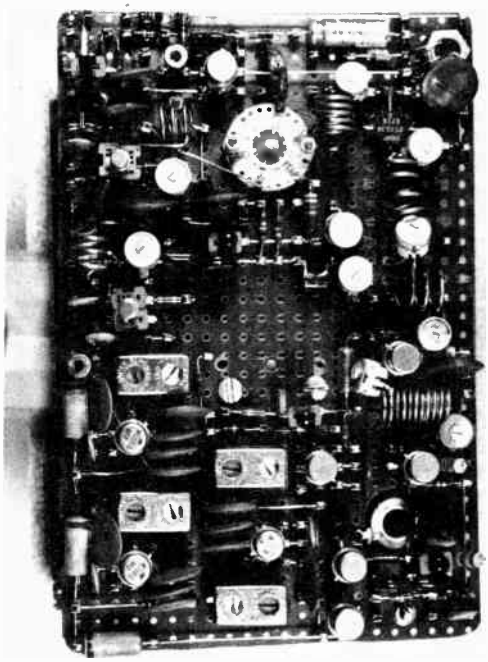

Fig. 12-22 — Interior view of the 2-meter transceiver. The components are neatly mounted on insulating perforated board, and push-in terminals serve as tie points. Short leads are the keynote for good circuit stability. See text regarding component identification.

required under peak output conditions. Idling currents are low enough that heat sinks are not normally necessary.

Adjustment and Operation

Receiver alignment is conventional in every respect. If a signal generator is available, first peak all of the i-f transformers to 10.7 MHz. The agc meter can be used as an indicator. The manual i-f gain control may have to be backed off to prevent oscillation in the strip. Next, if a grid-dip meter is available, use the absorption mode and try to get the LO to oscillate in the 133- to 137-MHz range. Once this is accomplished, hook up an antenna or vhf signal generator and hunt for a signal. The rf amplifier can be peaked at 145 MHz, and the mixer at 146 MHz. The receiver shown in the photographs can detect a 0.5-μV signal with 30-percent 400-Hz modulation. The local oscillator should be "rocked-in" using C9 and C11 until the band is centered in the tuning-capacitor range.

Transmitter alignment is not as easy, and requires a grid-dip meter, general-coverage receiver, and another 2-meter receiver as a minimum of test equipment. The transmitter may be built and tuned one stage at a time. The VXO is built and checked with the general-coverage receiver to assure a clean signal which could be pulled over the range of interest. Next the quadrupler is built, the coil dipped for 48 MHz, and the power turned on. Some adjustment of the 10,000-ohm base resistor may be necessary to optimize stage gain. Values between 5000 and 30,000 ohms will work best, depending upon the transistor type used and its beta. The output is peaked using the GDO in the absorption mode. Similarly, the tripler is built and tuned to 144 MHz. Some adjustment of the coil taps may be necessary to get maximum output without spurious oscillations. (Spurious oscillations will show up on the 2-meter monitor receiver as a louder-than-normal rushing noise.) The final is tuned in a similar manner.

Bibliography

Audio Design Phase 2, RCA, Somerville, NJ, 1970.

Preiss, "The '2-Meter QRP Mountain Topper'," *QST*, May, 1970.

Rush, "180-Watt D.S.B. Transmitter," *QST*, July, 1966.

Base connections for the semiconductors used in the 2-meter transceiver.

Chapter 13

Single-Sideband Transmission

GENERATING THE SSB SIGNAL

A fully modulated a-m signal has two thirds of its power in the carrier and only one third in the sidebands. The sidebands carry the intelligence to be transmitted; the carrier "goes along for the ride" and serves only to demodulate the signal at the receiver. By eliminating the carrier and transmitting only the sidebands, or just one sideband, the available transmitter power is used to greater advantage. To recover the intelligence being transmitted, the carrier must be reinserted at the receiver, but this is no great problem with a proper detector circuit.

Assuming that the same final-amplifier tube or tubes are used either for normal a-m or for single sideband, carrier suppressed, it can be shown that the use of ssb can give an effective gain of up to 9 dB over a-m – equivalent to increasing the transmitter power 8 times. Eliminating the carrier also eliminates the heterodyne interference that so often spoils communication in congested phone bands.

Filter Method

Two basic systems for generating ssb signals are shown in Fig. 13-2. One involves the use of a bandpass filter having sufficient selectivity to pass one sideband and reject the other. Mechanical filters are available for frequencies below 1 MHz. From 0.2 to 10 MHz, good sideband rejection can be obtained with filters using four or more quartz crystals. Oscillator output at the filter frequency is combined with the audio signal in a balanced modulator, and only the upper and lower sidebands appear in the output. One of the sidebands is passed by the filter and the other rejected, so that an ssb signal is fed to the mixer. The signal is mixed with the output of a high-frequency rf oscillator to produce the desired output frequency. For additional amplification a linear rf amplifier must be used. When the ssb signal is generated around 500 kHz it may be necessary to convert twice to reach the operating frequency, since this simplifies the problem of rejecting the "image" frequencies resulting from the heterodyne process. The problem of image frequencies in the frequency conversions of ssb signals differs from the problem in receivers because the beating-oscillator frequency becomes important. Either balanced mixers or sufficient selectivity must be used to attenuate these frequencies in the output and hence minimize the possibility of unwanted radiations. (Examples of filter-type exciters can be found in various issues of *QST* and in *Single Sideband for the Radio Amateur*.)

Phasing Method

The second system is based on the phase relationships between the carrier and sidebands in a modulated signal. As shown in the diagram, the audio signal is split into two components that are identical except for a phase difference of 90 degrees. The output of the rf oscillator (which may be at the operating frequency, if desired) is likewise split into two separate components having a 90-degree phase difference. One rf and one audio component are combined in each of two separate balanced modulators. The carrier is suppressed in the modulators, and the relative phases of the sidebands are such that one sideband is balanced out and the other is augmented in the combined output. If the output from the balanced modulators is high enough, such an ssb exciter can work directly into the antenna, or the power level can be increased in a following amplifier.

Generally, the filter-type exciter is easier to adjust than is the phasing exciter. Most home built ssb equipment uses commercially made filters these days. The alignment is done at the factory, thus relieving the amateur of the sometimes tedious task of adjusting the filter for suitable bandpass characteristics. Filter-type exciters are more popular than phasing units and offer better carrier suppression and alignment stability. It is still practical for the builder to fabricate his own crystal-lattice filter by utilizing low-cost surplus crystals. This possibility should not be overlooked if the builder is interested in keeping the overall cost of the home-built exciter at a minimum.

BALANCED MODULATORS

The carrier can be suppressed or nearly eliminated by using a balanced modulator or an extremely sharp filter. In ssb transmitters it is common practice to use both devices. The basic principle of any balanced modulator is to

Fig. 13-1 — Single sideband is the most popular of all the modes for amateur hf communication.

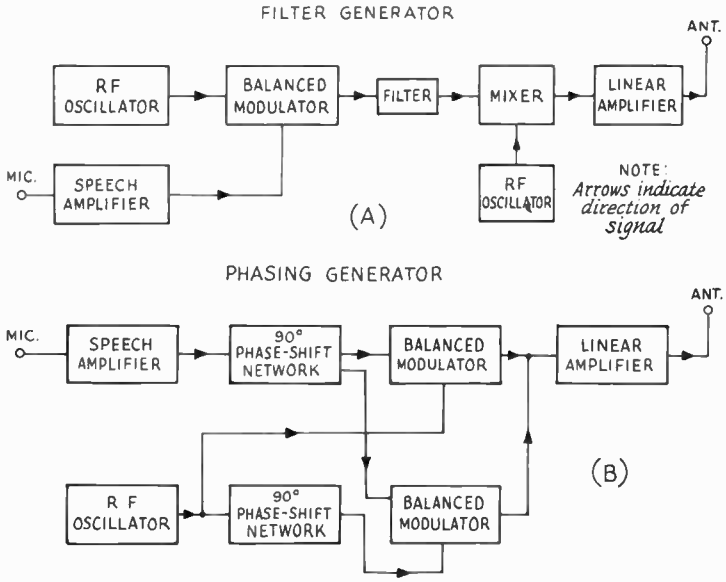

Fig. 13-2 — Two basic systems for generating single-sideband suppressed carrier signals.

introduce the carrier in such a way that it does not appear in the output, but so that the sidebands will. The type of balanced-modulator circuit chosen by the builder will depend upon the constructional considerations, cost, and whether diodes or transistors are to be employed.

In any balanced-modulator circuit there will be no output with no audio signal. When audio is applied, the balance is upset, and one branch will conduct more than the other. Since any modulation process is the same as "mixing" in receivers, sum and difference frequencies (sidebands) will be generated. The modulator is not balanced for the sidebands, and they will appear in the output.

In the rectifier-type balanced modulators shown in Fig. 13-3, at A and B, the diode rectifiers are connected in such a manner that, if they have equal forward resistances, no rf can pass from the carrier source to the output circuit via either of the two possible paths. The net effect is that no rf energy appears in the output. When audio is applied, it unbalances the circuit by biasing the diode (or diodes) in one path, depending upon the instantaneous polarity of the audio, and hence some rf will appear in the output. The rf in the output will appear as a double-sideband suppressed-carrier signal.

In any diode modulator, the rf voltage should be at least 6 to 8 times the peak audio voltage for minimum distortion. The usual operation involves a fraction of a volt of audio and several volts of rf. Desirable diode characteristics for balanced modulator and mixer service include: low noise, low forward resistance, high reverse resistance, good temperature stability, and fast switching time (for high-frequency operation). Fig. 13-4 lists the different classes of diodes, giving the ratio of forward-to-reverse resistance of each. This ratio is an important criterion in the selection of diodes. Also, the individual diodes used should have closely matched forward and reverse resistances; an ohmmeter can be used to select matched pairs or quads.

One of the simplest diode balanced modulators in use is that of Fig. 13-3A. Its use is usually limited to low-cost portable equipment in which a high degree of carrier suppression is not vital. A ring balanced modulator, shown in Fig. 13-3B, offers good carrier suppression at low cost. Diodes CR1 through CR4 should be well matched and can be 1N270s or similar. C1 is adjusted for best rf phase balance as evidenced by maximum carrier null. R1 is also adjusted for the best carrier null obtainable. It may be necessary to adjust each control several times to secure optimum suppression.

Varactor diodes are part of the unusual circuit shown in Fig. 13-3C. This arrangement allows single-ended input of near-equal levels of audio and carrier oscillator. Excellent carrier suppression, 50 dB or more, and a simple method of unbalancing the modulator for cw operation are features of this design. CR1 and CR2 should be rated at 20 pF for a bias of -4 V. R1 can be adjusted to cancel any mismatch in the diode characteristics, so it isn't necessary that the varactors be well matched. T1 is wound on a small-diameter toroid core. The tap on the primary winding of this transformer is at the center of the winding.

A bipolar-transistor balanced modulator is shown in 13-3D. This circuit is similar to one used by Galaxy Electronics and uses closely matched transistors at Q1 and Q2. A phase splitter (inverter) Q3, is used to feed audio to the balanced modulator in push-pull. The carrier is supplied to the circuit in parallel and the output is taken in push-pull. CR1 is a Zener diode and is used to stabilize the dc voltage. Controls R1 and R2 are adjusted for best carrier suppression.

The circuit at E offers superior carrier suppression and uses a 7360 beam-deflection tube as a balanced modulator. This tube is capable of

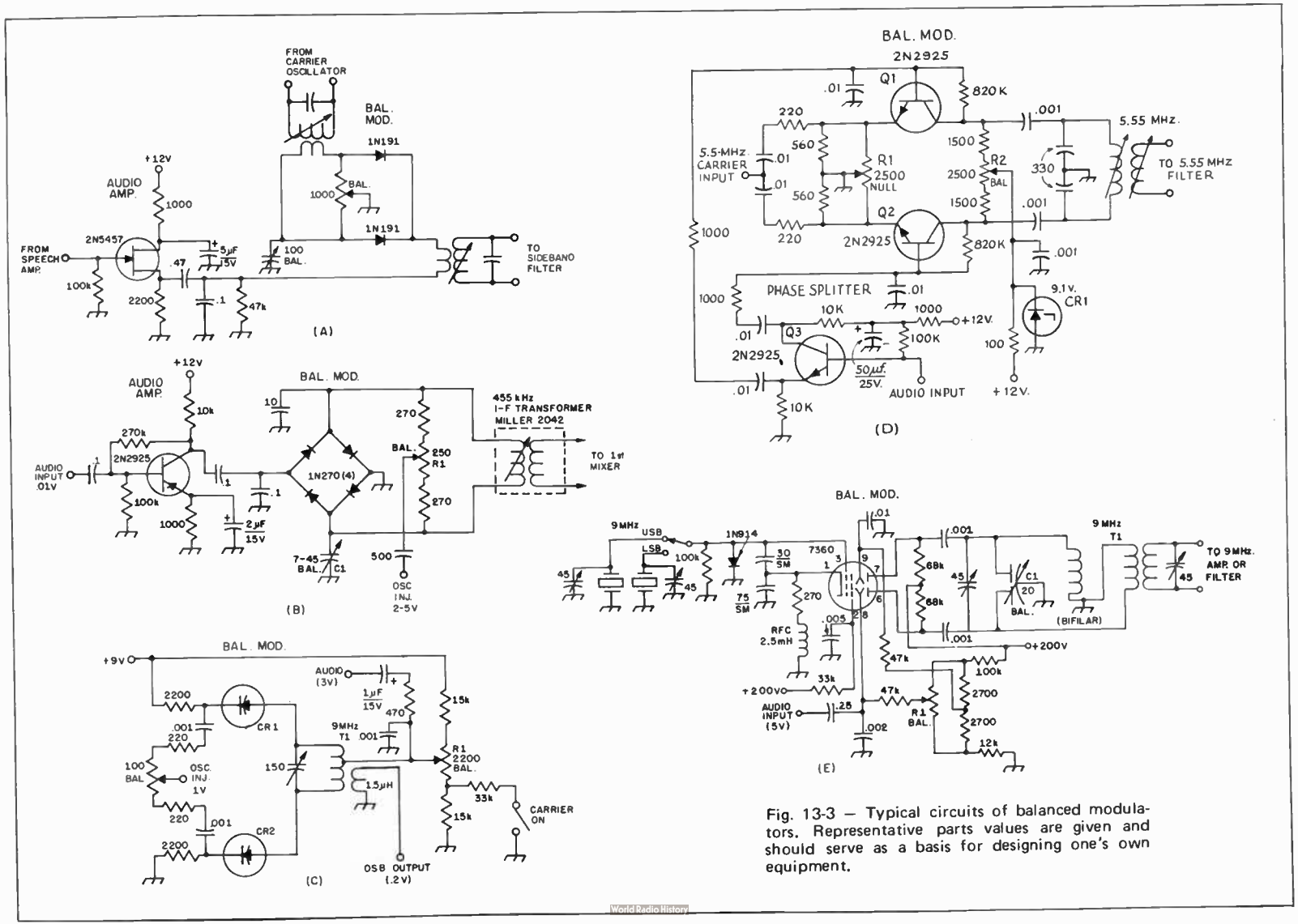

Fig. 13-3 — Typical circuits of balanced modulators. Representative parts values are given and should serve as a basis for designing one's own equipment.

Diode Type	Ratio (M = 1,000,000)
Point-contact germanium (1N98)	500
Small-junction germanium (1N270)	0.1M
Low-conductance silicon (1N457)	48M
High-conductance silicon (1N645)	480M
Hot-carrier (HPA-2800)	2000M

Fig. 13-4 — Table showing the forward-to-reverse resistance ratio for the different classes of solid-state diodes.

providing as much as 60 dB of carrier suppression. When used with mechanical or crystal-lattice filters the total carrier suppression can be as great as 80 dB. Most well-designed balanced modulators can provide between 30 and 50 dB of carrier suppression; hence the 7360 circuit is highly desirable for optimum results. The primary of transformer T1 should be bifilar wound for best results.

IC Balanced Modulators

Integrated circuits (ICs) are presently available for use in balanced-modulator and mixer circuits. A diode array such as the RCA CA3039 is ideally suited for use in circuits such as that of Fig. 13-5A. Since all diodes are formed on a common silicon chip, their characteristics are extremely well matched. This fact makes the IC ideal in a circuit where good balance is required. The hot-carrier diode also has closely matched characteristics and excellent temperature stability. Using broad-band toroidal-wound transformers, it is possible to construct a circuit similar to that of Fig. 13-6 which will have 40 dB of carrier suppression without the need for balance controls. T1 and T2 consist of trifilar windings, 12 turns of No. 32 enam. wire wound on a 1/2-inch toroid core. Another device with good inherent balance is the special IC made for modulator/mixer service, such as the Motorola MC1496G or Signetics S5596. A sample circuit using the MC1496 can be seen in Fig. 13-5B. R1 is adjusted for best carrier balance. The amount of energy delivered from the carrier generator effects the level of carrier suppression; 100 mV of injection is about optimum, producing up to 55 dB of carrier suppression. Additional information on balanced modulators and other ssb-generator circuits is given in the texts referenced at the end of this chapter.

FILTERS

A home-built crystal lattice filter suitable for use in an ssb generator is shown in Fig. 13-7. This unit is composed of three half-lattice sections, with 2 crystals in each section, made with surplus hf crystals. The 330-ohm resistor between sections two and three reduces interaction and smooths the passband response. The leakage reactance between the two halves of L2 and L3 is tuned out by the capacitors connected in series with the center taps of these coils. L1 and L4, the input and output coils, resonate with the calculated value of terminating capacitance at 5060 kHz and reflect the needed inductance across the crystals. The 2000-ohm resistors complete the termination.

All the crystals were purchased as 5500-kHz FT-243s and etched to the desired frequencies with hydrofluoric acid. It is best to wash each crystal with soap and water and measure its frequency before etching. The crystals in each set of three should be as close to each other in frequency as possible, and the separation between the two groups should be about 1500 Hz.

Tuning the filter is quite simple since all four adjustements can be peaked for maximum output at a fixed alignment frequency. This frequency should be on the high side of the pass band and can be the carrier frequency used for lower-sideband transmission (5505.5 kHz in the case of the filter described). Using the carrier frequency it is only necessary to unbalance the balanced modulator to obtain a cw alignment signal. Of course, a signal generator and rf-probe-equipped VTVM can also be used. C1, C2, L1 and L4 are adjusted for maximum output.

A slightly better shape factor can be had by detuning the carrier oscillator to a lower alignment frequency corresponding to about the 4-dB-down point on the high-frequency side of the pass band. Fig. 13-8 shows the measured performance of the filter when aligned at 5505.2 kHz. The 6-dB bandwidth is 2750 Hz.

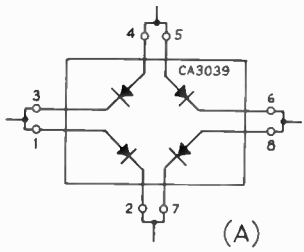

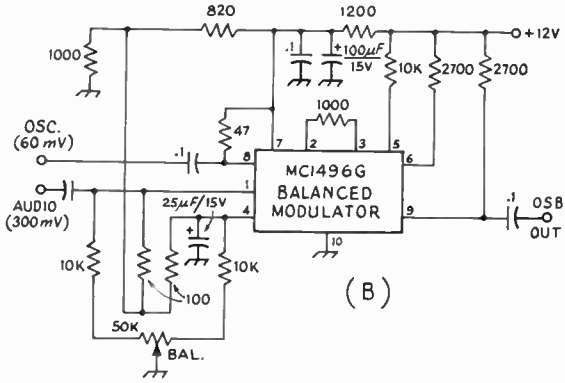

Fig. 13-5 — Additional balanced-modulator circuits in which integrated circuits are used.

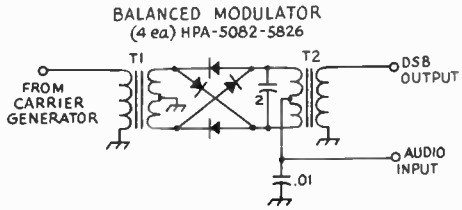

Fig. 13-6 — Balanced modulator design using hot-carrier diodes.

The (suppressed) carrier frequency must be adjusted so that it falls properly on the slope of the filter characteristic. If it is too close to the filter mid frequency the sideband rejection will be poor; if it is too far away there will be a lack of "lows" in the signal.

Ordinarily, the carrier is placed on one side of the curve, depending upon which sideband is desired, which is approximately 20 dB down from the peak. It is sometimes helpful to make provisions for "rubbering" the crystal of the carrier oscillator so that the most natural voice quality can be realized when making initial adjustments.

Using Commercial Crystal Filters

Some builders may not have adequate testing facilities for building and aligning their own filters. In such instances it is possible to purchase ready-made units which are prealigned and come equipped with crystals for upper- and lower-sideband use. Spectrum International[1] has two types for use at 9 MHz. Another manufacturer, McCoy Electronics Co.,[2] sells 9-MHz models for amateur use, and other filters are available surplus.[3]

Mechanical Filters

Mechanical filters contain elements that vibrate and establish resonance mechanically. In crystal filters the coupling between filter sections is achieved by electrical means. In mechanical filters, mechanical couplers are used to transfer the vibrations from one resonant section to the next. At the input and output ends of the filter are transducers which provide for electrical coupling to and from the filter. Most mechanical filters are designed for use from 200 to 600 kHz, the range near 455 kHz being the most popular for amateur use. Mechanical filters suitable for amateur radio circuits are manufactured by the Collins Radio Co. and can be purchased from some dealers in amateur radio equipment.

[1] McCoy Electronics Company, Mt. Holly Springs, PA.

[2] Spectrum International, Topsfield, MA.

[3] E. S. Electronic Labs, 31 Augustus, Excelsior Springs, MO.

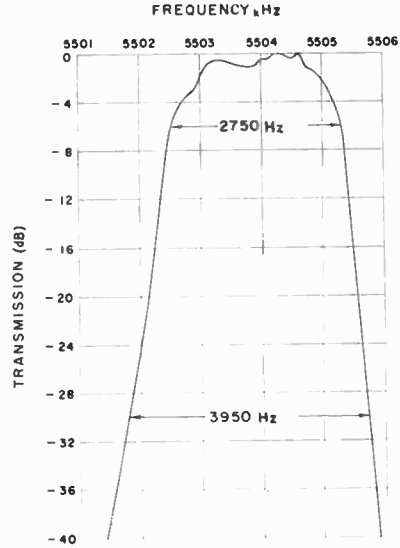

Fig. 13-8 — Measured selectivity characteristic of the filter when aligned at 5505.2 kHz. The 6-dB bandwidth is 2750 Hz and the 30-dB/6-dB shape factor is 1.44.

FILTER APPLICATIONS

Methods for using typical sideband filters are shown schematically in Fig. 13-9. In the circuit of

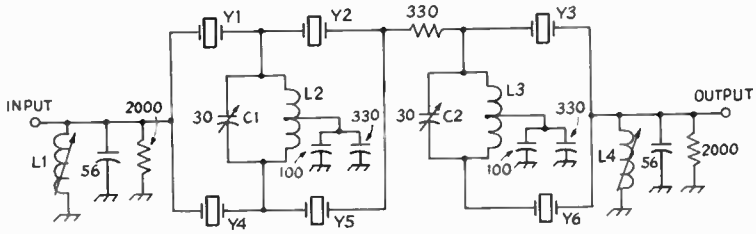

Fig. 13-7 — Circuit diagram of a filter. Resistances are in ohms, and resistors are 1/2-watt composition; capacitors are disk ceramic except as noted.

C1, C2 — Mica trimmer.

L1, L4 — 50 turns No. 38 enamel, close-wound on 17/64-inch dia ceramic slug-tuned form (CTC LS-6, National XR-81 or similar).

L2, L3 — 60 turns No. 38 enamel, close wound on 17/64-inch ceramic form (CTC LS-6, National XR-81 or similar with powered-iron core removed), center tapped.

Y1, Y2, Y3 — All same frequency (near 5500 kHz).

Y4, Y5, Y6 — All same frequency and 1500 to 1700 Hz different from Y1, Y2, Y3.

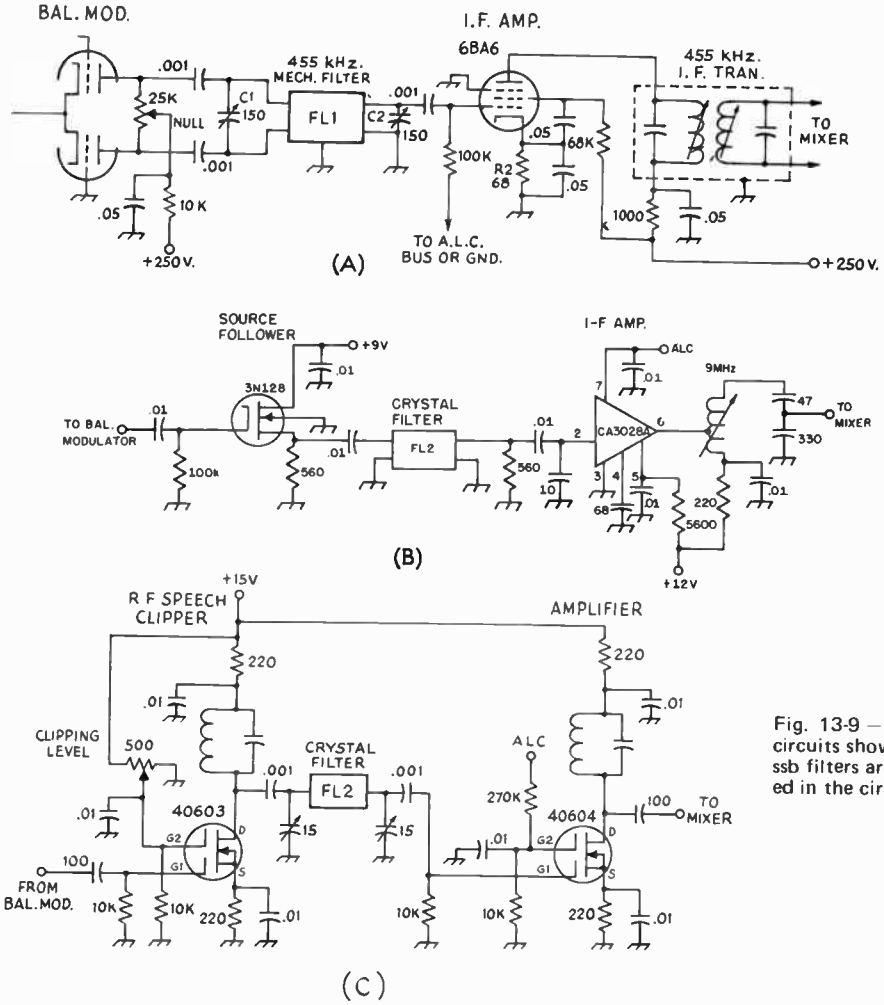

Fig. 13-9 — Typical circuits showing how ssb filters are connected in the circuit.

Fig. 13-9A a 455-kHz mechanical filter is coupled to the balanced modulator by means of two dc isolating capacitors. C1 is used to tune the input of FL1 to resonance (if a Collins type 455-FB-21 is used). Frequently, a fixed-value 120-pF capacitor will suffice at each end of the filter. C2 tunes the output of the filter. A stage of i-f amplification usually follows the filter, as shown, to compensate for the insertion loss of the filter and to provide a stage to which agc can be applied for alc (automatic level control) purposes. In the circuit shown the operator can ground R1 if alc is not used. R2 can be lifted from ground and a 5000-ohm control can be placed between it and ground to provide a means of manual gain control for providing the desired signal level to the mixer.

The circuit of Fig. 13-9B uses a 9-MHz crystal filter, followed by an IC i-f amplifier. Either the McCoy or Spectrum International filters are suitable. Most commercial ssb filters are supplied with a data sheet which shows recommended input and output circuits for matching the impedance of the filter. All are adaptable to use with tubes or transistors.

Another circuit which uses an hf crystal filter, preceded by a dual-gate MOSFET operating as an rf speech clipper, is shown in Fig. 13-9C. The advantages of rf clipping are explained later in this chapter. A second MOSFET amplifies the signal from the filter and provides a variable level of output which is controlled by the alc line.

CARRIER OSCILLATOR

The ssb-generation process starts with a crystal-controlled oscillator, as shown in Fig. 13-2. In a filter-type generator, the oscillator frequency is set on the low-frequency side of the filter bandpass to produce upper sideband and on the upper side when lower-sideband operation is desired. Suitable oscillator circuits are shown in Chapter 6.

MIXER

A single-sideband signal, unlike fm or cw, cannot be frequency multiplied. One or more mixer stages are employed in an ssb exciter to

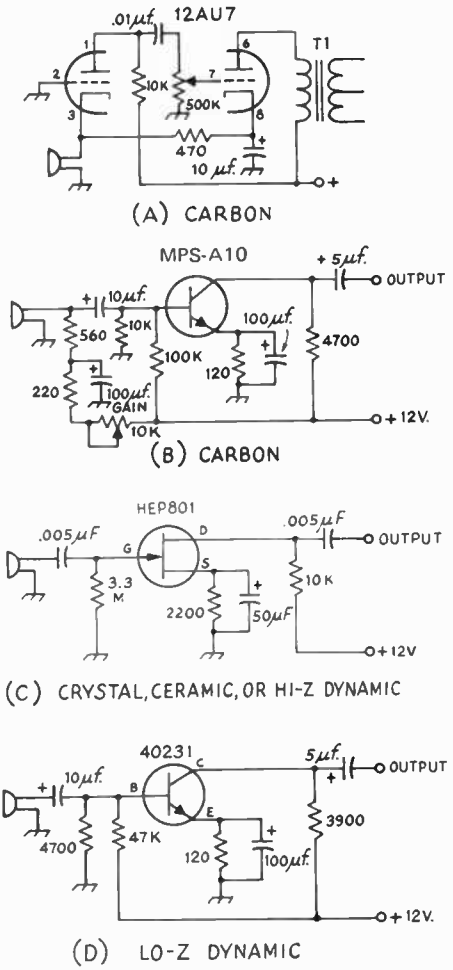

Fig. 13-10 — Speech circuits for use with standard-type microphones. Typical parts values are given.

heterodyne the output of a fixed-frequency ssb generator to the desired operating frequency. See Chapter 8 for details of mixer design and sample mixer circuits.

THE SPEECH AMPLIFIER

The purpose of a speech amplifier is to raise the level of audio output from a microphone to that required by the modulator of a transmitter. In ssb and fm transmitters the modulation process takes place at low levels, so only a few volts of audio are necessary. One or two simple voltage-amplifier stages will suffice. A-m transmitters often employ high-level plate modulation requiring considerable audio power, as described in Chapter 12. The microphone-input and audio voltage-amplifier circuits are similar in all three types of phone transmitters, however.

When designing speech equipment it is necessary to know (1) the amount of audio power the modulation system must furnish and (2) the output voltage developed by the microphone when it is spoken into from normal distance (a few inches) with ordinary loudness. It then becomes possible to choose the number and type of amplifier stages needed to generate the required audio power without overloading or undue distortion anywhere in the system.

MICROPHONES

The level of a microphone is its electrical output for a given sound intensity. The level varies somewhat with the type. It depends to a large extent on the distance from the sound source and the intensity of the speaker's voice. Most commercial transmitters are designed for the median level. If a high-level mike is used, care should be taken not to overload the input amplifier stage. Conversely, a microphone of too low a level must be boosted by a preamplifier.

The frequency response (fidelity) of a microphone is its ability to convert sound uniformly into alternating current. For high articulation it is desirable to reproduce a frequency range of 200-3500 Hz. When all frequencies are reproduced equally, the microphone is considered "flat." Flat response is highly desirable as peaks (sharp rises in the reproduction curve) limit the swing or modulation to the maximum drive voltage, whereas the usable energy is contained in the flat part of the curve.

Microphones are generally omnidirectional, and respond to sound from all directions, or unidirectional, picking up sound from one direction. If a microphone is to be used close to the operator's

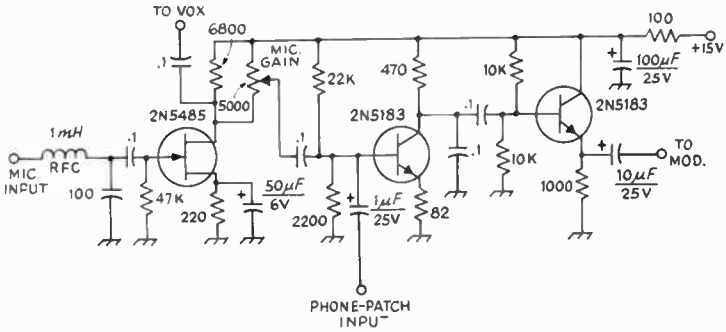

Fig. 13-11 — A resistance-coupled speech amplifier. Component values are representative of a typical circuit.

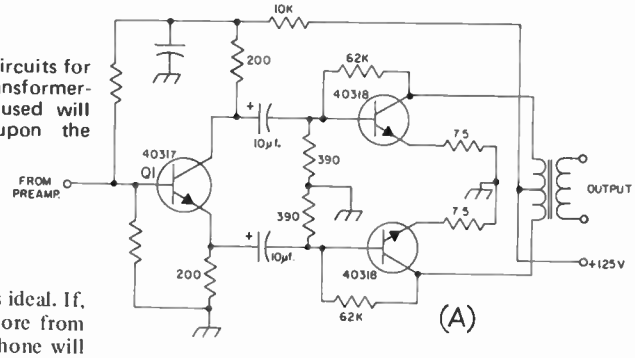

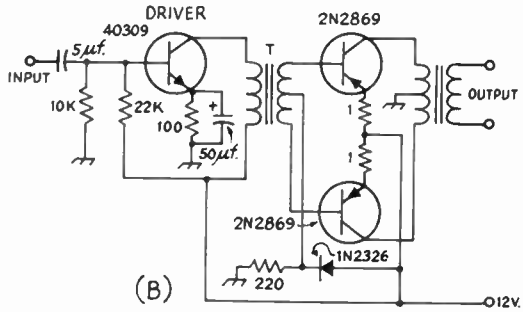

Fig. 13-12 – (A) Typical phase-inverter circuits for transistor amplifier applications. (B) Transformer-coupled audio amplifier. Parts values used will depend upon transistors used, and upon the frequency response desired.

mouth, an omnidirectional microphone is ideal. If, however, speech is generated a foot or more from the microphone, a unidirectional microphone will reduce reverberation by a factor of 1.7:1. Some types of unidirectional microphones have proximity effect in that low frequencies are accentuated when the microphone is too close to the mouth.

Carbon Microphones

The carbon microphone consists of a metal diaphragm placed against a cup of loosely packed carbon granules. As the diaphragm is actuated by the sound pressure, it alternately compresses and decompresses the granules. When current is flowing through the button, a variable dc will correspond to the movement of the diaphragm. This fluctuating dc can be used to provide grid-cathode voltage corresponding to the sound pressure.

The output of a carbon microphone is extremely high, but nonlinear distortion and instability has reduced its use. The circuit shown in Fig. 13-10 will deliver 20-30 volts at the transformer secondary.

Piezoelectric Microphones

Piezoelectric microphones make use of the phenomena by which certain materials produce a voltage by mechanical stress or distortion of the material. A diaphragm is coupled to a small bar of material such as Rochelle salt or ceramic made of barium titanate or lead zirconium titanate. The diaphragm motion is thus translated into electrical energy. Rochelle-salt crystals are susceptible to high temperatures, excessive moisture, or extreme dryness. Although the output level is higher, their use is declining because of their fragility.

Ceramic microphones are impervious to temperature and humidity. The output level is adequate for most modern amplifiers. They are capacitive devices and the output impedance is high. The load impedance will affect the low frequencies. To provide attenuation, it is desirable to reduce the load to 0.25 megohm or even lower, to maximize performance when operating ssb, thus eliminating much of the unwanted low-frequency response.

Dynamic Microphones

The dynamic microphone somewhat resembles a dynamic loudspeaker. A lightweight coil, usually made of aluminum wire, is attached to a diaphragm. This coil is suspended in a magnetic circuit. When sound impinges on the diaphragm, it moves the coil through the magnetic field generating an alternating voltage.

Dynamic microphones are essentially low-impedance devices. For vacuum-tube input circuits, they are generally supplied in high-impedance (25,000 ohms) output. Transistor circuitry usually requires a relatively low impedance to supply power rather than voltage. In either instance, a built-in transformer provides the impedance match. Whenever long lines are necessary, a low-impedance microphone with suitable coupling transformers should be used.

VOLTAGE AMPLIFIERS

The important characteristics of a voltage amplifier are its voltage gain, maximum undistorted output voltage, and its frequency response. The voltage gain is the voltage-amplification ratio of the stage. The output voltage is the maximum af voltage that can be secured from the stage without distortion. The amplifier frequency response should be adequate for voice reproduction; this requirement is easily satisfied.

The voltage gain and maximum undistorted output voltage depend on the operating conditions of the amplifier. The output voltage is in terms of *peak* voltage rather than rms; this makes the rating independent of the waveform. Exceeding the peak value causes the amplifier to distort, so it is more useful to consider only peak values in working with amplifiers.

Resistance Coupling

Resistance coupling generally is used in voltage-amplifier stages. It is relatively inexpensive, good frequency response can be secured, and there

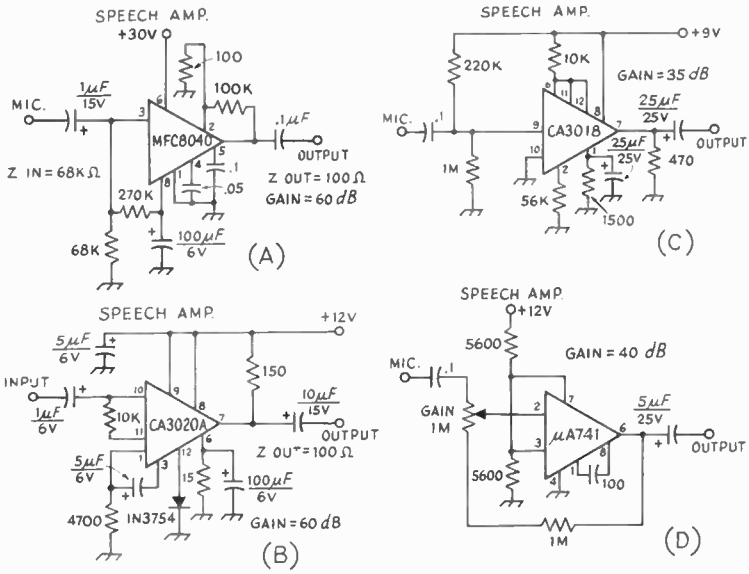

Fig. 13-13 — Typical speech amplifier using integrated circuits.

is little danger of hum pick-up from stray magnetic fields. It is the most satisfactory type of coupling for the output circuits of pentodes and high-μ triodes, because with transformers a sufficiently high load impedance cannot be obtained without considerable frequency distortion. A typical circuit is given in Fig. 13-11.

Phase Inversion

Push-pull output may be secured with resistance coupling by using phase-inverter or phase-splitter circuits as shown in Fig. 13-12. In this circuit the voltage developed across the emitter resistor of Q1 is equal to, but 180 degrees out of phase with, the voltage swing across the collector resistor. Thus, the following two stages are fed equal af voltages. The gain of Q1 will be quite low, if indeed the stage exhibits any gain at all.

Transformer Coupling

Transformer coupling between stages ordinarily is used only when power is to be transferred (in such a case resistance coupling is very inefficient), or when it is necessary to couple between a single-ended and a push-pull stage.

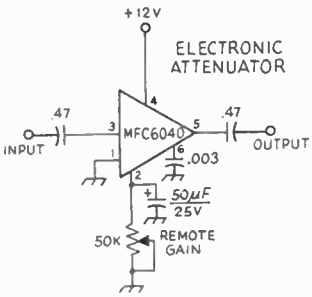

Fig. 13-14 — A dc voltage controls the gain of this IC, eliminating the need for shielded leads to the gain control.

Several types of ICs have been developed for use in speech amplifiers. The Motorola MFC8040 features very low noise, typically 1 μV, (Fig. 13-13A), while the RCA CA3020 has sufficient power output — 500 mW — to drive low-impedance loads (Fig. 13-13B). A transistor IC array can also be put to work in a speech amplifier, as shown in Fig. 13-13C. This circuit uses an RCA CA3018, with a high-gain Darlington pair providing high gain and high input impedance. A second transistor within the IC functions as an emitter follower, for low-impedance output. Most of the operational-amplifier ICs will work as high-gain speech amplifiers, using a minimum of external parts as shown in Fig. 13-13D. The μA741 has internal frequency compensation, but the popular 709 series of operational amplifiers requires external frequency compensation to prevent self-oscillation.

Gain Control

A means for varying the over-all gain of the amplifier is necessary for keeping the final output at the proper level for modulating the transmitter. The common method of gain control is to adjust the value of ac voltage applied to the base or grid of one of the amplifiers by means of a voltage divider or potentiometer.

The gain-control potentiometer should be near the input end of the amplifier, at a point where the signal voltage level is so low there is no danger that the stages ahead of the gain control will be overloaded by the full microphone output. In a high-gain amplifier it is best to operate the first stage at maximum gain, since this gives the best signal-to-hum ratio. The control is usually placed in the input circuit of the second stage.

Remote gain control can also be accomplished with an electronic attenuator IC, such as the Motorola MFC6040. A dc voltage varies the gain of the IC from +6 dB to -85 dB, eliminating the need

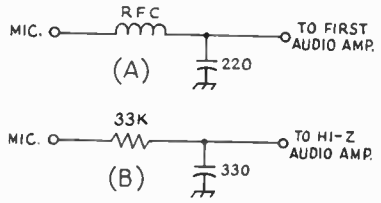

Fig. 13-15 – Rf filters using *LC* (A) and *RC* (B) components, which are used to prevent feedback caused by rf pickup on the microphone lead.

for shielded leads to a remotely located volume control. A typical circuit is shown in Fig. 13-14.

Speech-Amplifier Construction

Once a suitable circuit has been selected for a speech amplifier, the construction problem resolves itself into avoiding two difficulties – excessive hum, and unwanted feedback. For reasonably humless operation, the hum voltage should not exceed about 1 percent of the maximum audio output voltage – that is, the hum and noise should be at least 40 dB below the output level.

Unwanted feedback, if negative, will reduce the gain below the calculated value; if positive, is likely to cause self-oscillation or "howls." Feedback can be minimized by isolating each stage with decoupling resistors and capacitors, by avoiding layouts that bring the first and last stages near each other, and by shielding of "hot" points in the circuit, such as high-impedance leads in low-level stages.

If circuit-board construction is used, high-impedance leads should be kept as short as possible. All ground returns should be made to a common point. A good ground between the circuit board and the metal chassis is necessary. Complete shielding from rf energy is always required for low-level solid-state audio circuits. The microphone input should be decoupled for rf with a filter, as shown in Fig. 13-15. At A, an rf choke with a high impedance over the frequency range of the transmitter is employed. For high-impedance inputs, a resistor may be used in place of the choke.

When using paper capacitors as bypasses, be sure that the terminal marked "outside foil," often indicated with a black band, is connected to ground. This utilizes the outside foil of the capacitor as a shield around the "hot" foil. When paper or mylar capacitors are used for coupling between stages, always connect the outside foil terminal to the side of the circuit having the lower impedance to ground.

DRIVER AND OUTPUT STAGES

Few ssb transmitting mixers have sufficient output to properly drive an output stage of any significant power level. Most modern-day linear amplifiers require at least 30 to 100 watts of exciter output power to drive them to their rated power input level. It follows, then, that an intermediate stage of amplification should be used between the mixer and the pa stage of the exciter.

The vacuum-tube mixers of Chapter 8 will provide 3 to 4 peak volts of output into a high-impedance load. Since most AB_1 exciter output stages need from 25 to 50 volts of swing on their grids for normal operation, it is necessary to employ a driver stage to amplify the mixer output. There are several high-transconductance pentode tubes that work well as drivers. Among them are the 6CL6, the 12BY7, the 6EH7, and the 6GK6. Since all of these tubes are capable of high gain, instability is sometimes encountered during their use. Parasitic suppression should be included as a matter of course, and can take the form of a low-value noninductive resistor in series with the grid, or a standard parasitic choke installed directly at the plate of the tube. Some form of neutralization is recommended and is preferred to resistive loading of the tuned circuits. The latter method lowers the tuned-circuit *Q*. This in turn lowers the stage selectivity and permits spurious responses from the mixer to be passed on to the following stage of the exciter.

A typical driver and PA stage for modern exciters is shown in Fig. 13-16. The PA is set up for AB_1 amplification. The AB_1 mode is preferred because it results in less distortion than does the AB_2 or Class-B modes, and because driving power is not needed for AB_1 operation. A 6146 tube is used but an inexpensive TV sweep tube may be employed if a higher level of IMD is permissible.

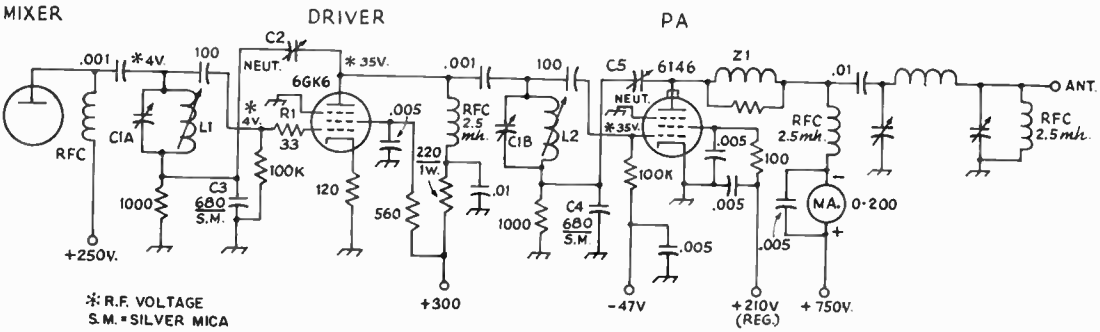

Fig. 13-16 – Schematic diagram of a typical driver and final stage for ssb exciter. Neutralization and parasitic-suppression circuits have been included.

Some sweep tubes are capable of producing less IMD than others, but if not overdriven most of them are satisfactory for ham use. Among the sweep tubes useful as AB_1 amplifiers are the following: 6DQ5, 6GB5, 6GE5, 6HF5, 6JE6, 6JS6, 6KD6, 6KG6, 6LF6 and 6LQ6.

A Practical Circuit

In the circuit of Fig. 13-16, a 6GK6 and a 6146 are shown in a typical driver-amplifier arrangement. Each stage is stabilized by means of R1 in the driver grid, and Z1 in the PA plate, both for parasitic suppression. C2 and C5 are neutralizing capacitors and can take the form of stiff wires placed adjacent to, and in the same plane as the tube anode. Varying the spacing between the neutralizing stubs and the tube envelopes provides the adjustment of these capacitors. Parallel dc feed is used in the mixer and driver stages to prevent the tuned-circuit *Q* from being lowered by dc current flow through L1 and L2. C1A and C1B are ganged, and slug-tuned inductors are used at L1 and L2 to permit tracking of the mixer and driver plate tanks. C3 and C4 form part of the neutralizing circuits. The values shown are suitable for operation on 3.5 MHz but may require modification for use on the other bands. Regulated dc voltage is recommended for the screen grids of the driver and rf stages. Typical rf voltages (measured with a diode rf probe and VTVM are identified with an asterisk. A circuit of this type is capable of up to 60 watts PEP output. For more information on linear amplifiers for sideband service, see Chapter 6.

POWER RATINGS OF SSB TRANSMITTERS

Fig. 13-17 is more or less typical of a few voice-frequency cycles of the modulation envelope of a single-sideband signal. Two amplitude values associated with it are of particular interest. One is the *maximum peak amplitude*, the greatest amplitude reached by the envelope at any time. The other is the *average amplitude*, which is the average of all the amplitude values contained in the envelope over some significant period of time, such as the time of one syllable of speech.

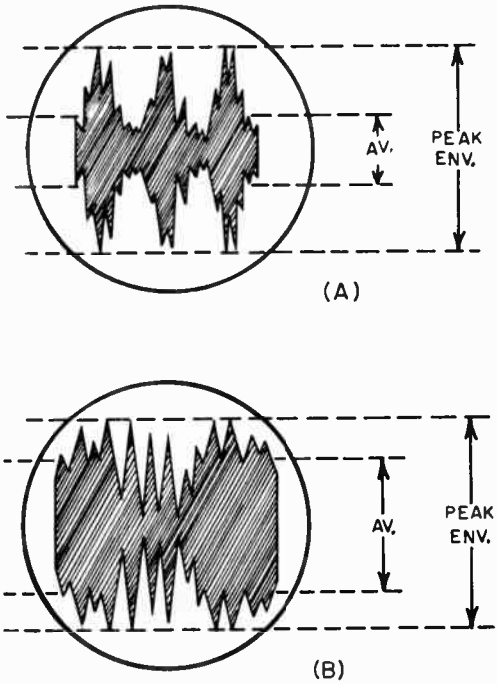

Fig. 13-17 — (A) Typical ssb voice-modulated signal might have an envelope of the general nature shown, where the rf amplitude (current or voltage) is plotted as a function of time, which increases to the right horizontally. (B) Envelope pattern after speech processing to increase the average level of power output.

The power contained in the signal at the maximum peak amplitude is the basic transmitter rating. It is called the *peak-envelope power*, abbreviated PEP. The peak-envelope power of a given transmitter is intimately related to the distortion considered tolerable. The lower the signal-to-distortion ratio the lower the attainable peak-envelope power, as a general rule. For splatter reduction, an *S/D* ratio of 25 dB is considered a border-line minimum, and higher figures are desirable.

The signal power, *S*, in the standard definition of *S/D* ratio is the power in *one* tone of a two-tone test signal. This is 3 dB below the peak-envelope power in the same signal. Manufacturers of amateur ssb equipment usually base their published *S/D* ratios on PEP, thereby getting an *S/D* ratio that looks 3 dB better than one based on the standard definition. In comparing distortion-product ratings of different transmitters or amplifiers, first make sure that the ratios have the same base.

When the output of an ssb transmitter is viewed on a spectrum analyzer, the display shows the power in the two tones separately, so that the level of distortion products is 6 dB below the level of either tone. However, commercial analyzers usually have a scale over the display tube which is calibrated directly in dB below a single-tone test. Readings may be converted to dB below the PEP level by subtracting 6 dB from the indicated distortion levels.

Peak vs. Average Power

Envelope peaks occur only sporadically during voice transmission, and have no direct relationship with meter readings. The meters respond to the amplitude (current or voltage) of the signal averaged over several cycles of the modulation envelope. (This is true in practically all cases, even though the transmitter rf output meter may be *calibrated* in watts. Unfortunately, such a calibra-

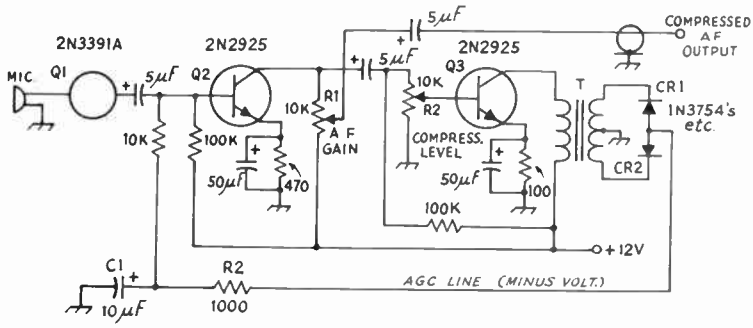

Fig. 13-18 – Typical solid-state compressor circuit. C1 and R2 determine the hold-in time.

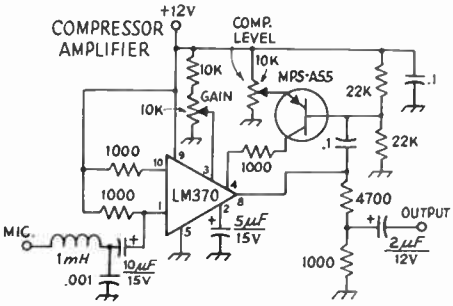

tion means little in voice transmission since the meter can be calibrated in watts only by using a sine-wave signal – which a voice-modulated signal definitely is not.)

The ratio of peak-to-average amplitude varies widely with voice of different characteristics. In the case shown in Fig. 13-17A the average amplitude, found graphically, is such that the peak-to-average ratio of amplitudes is almost 3 to 1. The ratio of peak *power* to average *power* is something else again. These is no simple relationship between the meter reading and actual average power, for the reason mentioned earlier.

DC Input

FCC regulations require that the transmitter power be rated in terms of the dc input to the final stage. Most ssb final amplifiers are operated Class AB_1 or AB_2, so that the plate current during modulation varies upward from a "resting" or no-signal value that is generally chosen to minimize distortion. There will be a peak-envelope value of plate current that, when multiplied by the dc plate voltage, represents the instantaneous tube power input required to produce the peak-envelope output. This is the "peak-envelope dc input" or "PEP input." It does not register on any meter in the transmitter. Meters cannot move fast enough to show it – and even if they did, the eye couldn't follow. What the plate meter *does* read is the plate current averaged over several modulation-envelope cycles. This multiplied by the dc plate voltage is the number of watts input required to produce the *average* power output described earlier.

In voice transmission the power input and power output are both continually varying. The power input peak-to-average ratio, like the power-output peak-to-average ratio, depends on the voice characteristics. Determination of the input ratio is further complicated by the fact that there is a resting value of dc plate input even when there is no rf output. *No exact figues are possible.* However, experience has shown that for many types of voices and for ordinary tube operating conditions where a moderate value of resting current is used, the ratio of PEP input to average input (during a modulation peak) will be in the neighborhood of 2 to 1. That is why many amplifiers are rated for a PEP input of 2 kilowatts even though the maximum legal input is 1 kilowatt.

PEP Input

The 2-kilowatt PEP input rating can be interpreted in this way: The amplifier can handle dc peak-envelope inputs of 2 kw, presumably with satisfactory linearity. But it should be run up to such peaks if – and *only* if – in doing so the dc plate current (the current that shows on the plate meter) multiplied by the dc plate voltage does not at any time exceed 1 kilowatt. On the other hand, if your voice has characteristics such that the dc peak-to-average ratio is, for example, 3 to 1, you should not run a greater dc input during peaks than 2000/3, or 660 watts. Higher dc input would drive the amplifier into nonlinearity and generate splatter.

If your voice happens to have a peak-to-average ratio of less than 2 to 1 with this particular amplifier, you cannot run more than 1 kilowatt dc input even though the envelope peaks do not reach 2 kilowatts.

It should be apparent that the dc input rating (based on the *maximum* value of dc input developed during modulation, of course) leaves much to be desired. Its principal virtues are that it can be measured with ordinary instruments, and that it is consistent with the method used for rating the power of other types of emission used by amateurs. The meter readings offer no assurance that the transmitter is being operated within linearity limits, unless backed up by oscilloscope checks using *your* voice.

It should be observed, also, that in the case of a grounded-grid final amplifier, the 1-kilowatt dc input permitted by FCC regulations must include the input to the driver stage as well as the input to the final amplifier itself. Both inputs are measured as described above.

SPEECH PROCESSING

Four basic systems, or a combination thereof, can be used to reduce the peak-to-average ratio, and thus, to raise the average power level of an ssb signal. They are: compression or clipping of the af wave before it reaches the balanced modulator, and compression or clipping of the rf waveform after the ssb signal has been generated. One form of rf compression, commonly called alc (automatic level control) is almost universally used in amateur ssb transmitters. Audio processing is also used to increase the level of audio power contained in the sidebands of an a-m transmitter and to maintain constant deviation in an fm transmitter. Both compression and clipping are used in a-m systems, while most fm transmitters employ only clipping.

Volume Compression

Although it is obviously desirable to keep the voice level as high as possible, it is difficult to maintain constant voice intensity when speaking into the microphone. To overcome this variable output level, it is possible to use automatic gain control that follows the *average* (not instantaneous) variations in speech amplitude. This can be done by rectifying and filtering some of the audio output and applying the rectified and filtered dc to a control electrode in an early stage in the amplifier.

A practical example of a compressor circuit is shown in Fig. 13-18A. Q1 is a low-noise microphone-amplifier stage which drives Q2, another audio amplifier. Output to the succeeding audio amplifier stages is taken from R1. Some of the output is taken from the collector of Q2 and is amplified further by Q3. Transformer T has a 1000-ohm primary impedance, and the secondary impedance is 10,000 ohms. It is used to couple the output of Q3 to the agc diodes, CR1 and CR2. The diodes rectify the amplified af signal and feed a minus agc voltage to the base element of Q2. Since Q2 is an npn transistor the minus agc voltage reverse biases Q2 and lowers its gain. The amount of compression obtained depends upon the setting of R2. The gain reduction from the agc action is substantially proportional to the average output of the microphone and thus tends to hold the amplifier output at a constant level.

A suitable time constant for voice operation is established by C1 and R2. They have a sufficiently long time constant to hold the agc voltage at a reasonably steady value between syllables and words. The overall gain of the system must be high enough to assure full output at a moderately-low voice level. Vacuum-tube compressors operate on the same principle.

Fig. 13-18B shows an IC audio compressor circuit using the National Semiconductor LM-370. This IC has two gain-control points, pins 3 and 4; one is used for the input gain adjustment while the other receives agc voltage whenever the output level exceeds a preset norm. R2 establishes the point at which compression starts.

Speech Clipping and Filtering

In speech wave forms the average power content is considerably less than in a sine wave of the same peak amplitude. If the low-energy peaks are clipped off, the remaining wave form will have a considerably higher ratio of average power to peak amplitude. Although clipping distorts the wave form and the result therefore does not sound exactly like the original, it is possible to secure a worthwhile increase in audio power without sacrificing intelligibility. Once the system is properly adjusted *it will be impossible to overdrive* the modulator stage of the transmitter because the maximum output amplitude is fixed.

By itself, clipping generates high-order harmonics and therefore will cause splatter. To prevent this, the audio frequencies above those

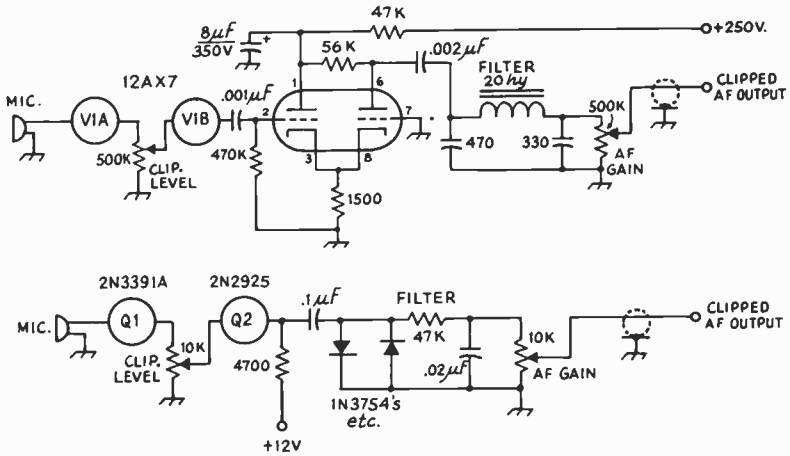

Fig. 13-19 — This drawing illustrates use of a triode tube or silicon diodes to clip positive and negative voice peaks.

needed for intelligible speech must be filtered out, *after* clipping and *before* modulation. The filter required for this purpose should have relatively little attenuation below about 2500 Hz, but high attentuation for all frequencies above 3000 Hz.

The values of L and C should be chosen to form a low-pass filter section having a cutoff frequency of about 2500 Hz, using the modulating impedance of the rf amplifier as the load resistance. For this cutoff frequency the formulas are

$$L1 = \frac{R}{7850} \text{ and } C1 = C2 = \frac{63.6}{R}$$

where R is in ohms, L1 in henrys, and C1 and C2 in microfarads.

There is a loss in naturalness with "deep" clipping, even though the voice is highly intelligible. With moderate clipping levels (6 to 12 dB) there is almost no change in "quality" but the voice power is increased considerably.

Before drastic clipping can be used, the speech signal must be amplified several times more than is necessary for normal modulation. Also, the hum and noise must be much lower than the tolerable level in ordinary amplification, because the noise in the output of the amplifier increases in proportion to the gain.

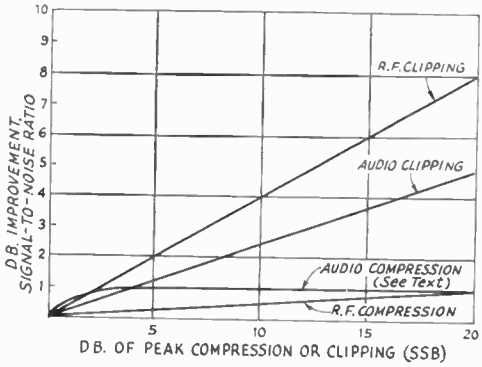

Fig. 13-20 — The improvement in received signal-to-noise ratio achieved by the simple forms of signal processing.

In the circuit of Fig. 13-19B a simple diode clipper is shown following a two-transistor preamplifier section. The 1N3754s conduct at approximately 0.7 volt of audio and provide positive- and negative-peak clipping of the speech wave form. A 47,000-ohm resistor and a .02-μF capacitor follow the clipper to form a simple R-C filter for attenuating the high-frequency components generated by the clipping action, as discussed earlier. Any top-hat or similar silicon diodes can be used in place of the 1N3754s. Germanium diodes (1N34A type) can also be used, but will clip at a slightly lower peak audio level.

SSB SPEECH PROCESSING

Compression and clipping are related, as both have fast attack times, and when the compressor release time is made quite short, the effect on the

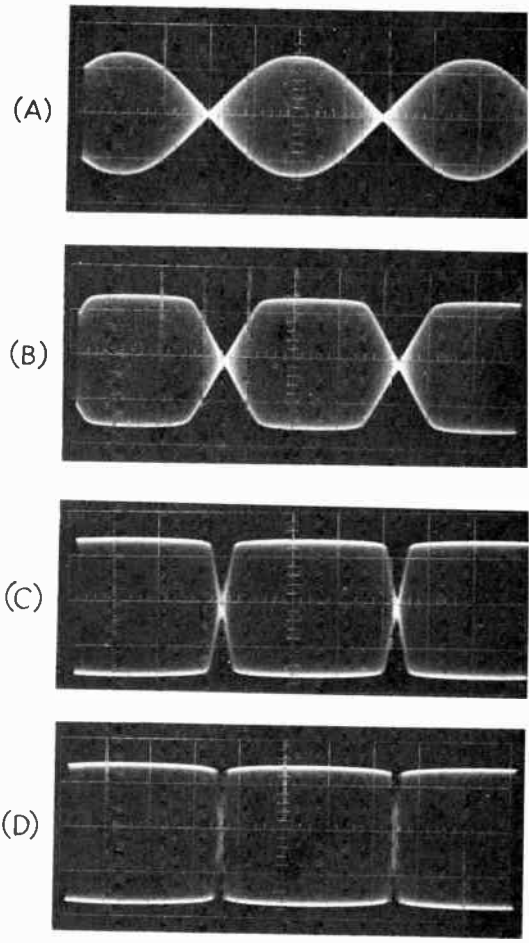

Fig. 13-21 — Two-tone envelope patterns with various degrees of rf clipping. All envelope patterns are formed using tones of 600 and 1000 Hz. (A) At clipping threshold; (B) 5 dB of clipping; (C) 10 dB of clipping; (D) 15 dB of clipping.

wave from approaches that of clipping. Speech processing is most effective when accomplished at radio frequencies, although a combination of af clipping and compression can produce worthwhile results. The advantage of an outboard audio speech processor is that no internal modifications are necessary to the ssb transmitter with which it will be used.

To understand the effect of ssb speech processing, review the basic rf waveforms shown in Fig. 13-17A. Without processing, they have high peaks but low average power. After processing, Fig. 13-17B, the amount of average power has been raised considerably. Fig. 13-20 shows an advantage of several dB for rf clipping (for 20 dB of processing) over its nearest competitor.

Investigations by W6JES reported in *QST* for January, 1969, show that, observing a transmitted signal using 15 dB of audio clipping from a remote receiver, the intelligibility threshold was improved nearly 4 dB over a signal with no clipping.

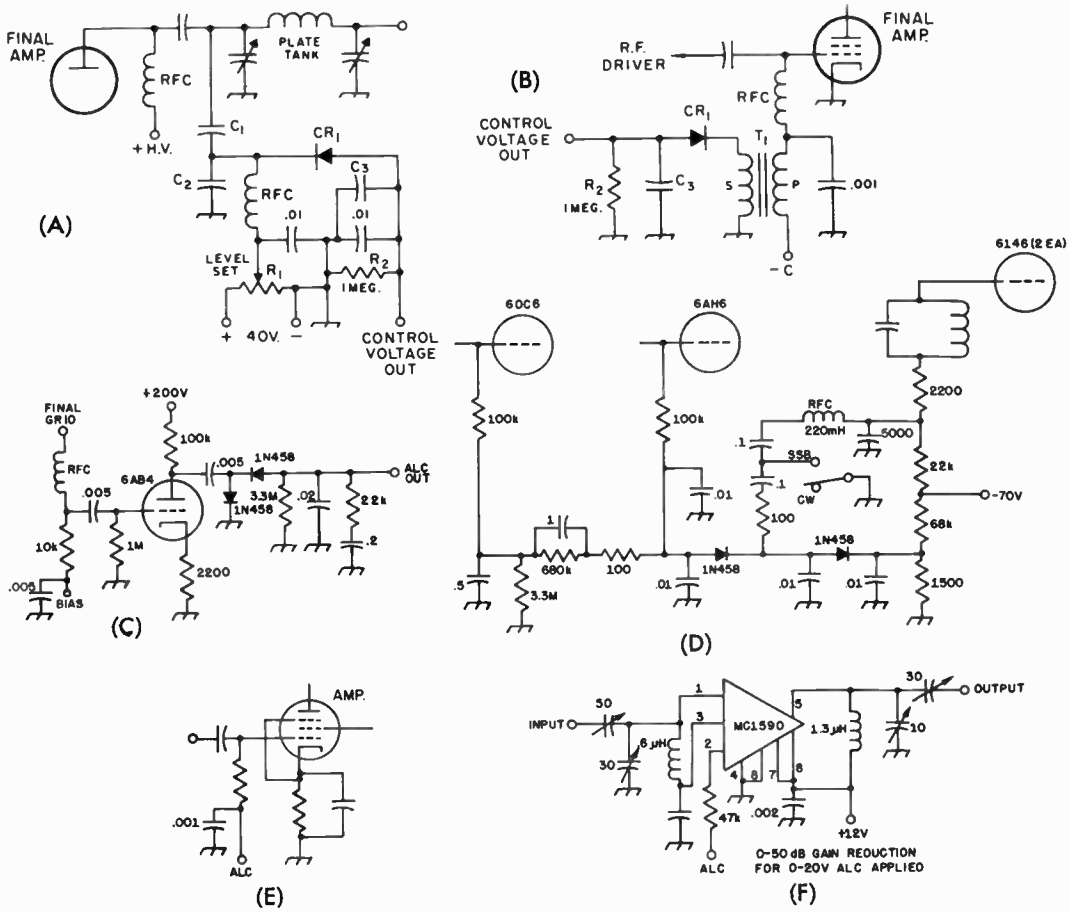

Fig. 13-22 — (A) Control voltage obtained by sampling the rf output voltage of the final amplifier. The diode back bias, 40 volts or so maximum, may be taken from any convenient positive voltage source in the transmitter. R1 may be a linear control having a maximum resistance of the order of 50,000 ohms. CR1 may be a 1N34A or similar germanium diode.
(B) Control voltage obtained from grid circuit of a Class AB_1 tetrode amplifier. T1 is an interstage audio transformer having a turns ratio, secondary to primary, of 2 or 3 to 1. An inexpensive transformer may be used since the primary and secondary currents are negligible. CR1 may be a 1N34A or similar; time constant R2C3 is discussed in the text.
(C) Control voltage is obtained from the grid of a Class AB_1 tetrode amplifier and amplified by a triode audio stage.
(D) Alc system used in the Collins 32S-3 transmitter.
(E) Applying control voltage to the tube or (F) linear IC controlled amplifier.

Increasing the af clipping level to 25 dB gave an additional 1.5 dB improvement in intelligibility. Audio compression was found to be valuable for maintaining relatively constant average-volume speech, but such a compressor added little to the intelligibility threshold at the receiver, only about 1-2 dB.

Evaluation of rf clipping from the receive side with constant-level speech, and filtering to restore the original bandwidth, resulted in an improved intelligibility threshold of 4.5 dB with 10 dB of clipping. Raising the clipping level to 18 dB gave an additional 4-dB improvement at the receiver, or 8.5-dB total increase. The improvement of the intelligibility of a weak ssb signal at a distant receiver can thus be substantially improved by rf clipping. The effect of such clipping on a two-tone test pattern is shown in Fig. 13-21.

Automatic level control, although a form of rf speech processing, has found its primary application in maintaining the peak rf output of an ssb transmitter at a relatively constant level, hopefully below the point at which the final amplifier is overdriven, when the audio input varies over a considerable range. These typical alc systems, shown in Fig. 13-22, by the nature of their design time constants offer a limited increase in transmitted average-to-PEP ratio. A value in the region of 2-5 dB is typical. An alc circuit with shorter time constants will function as an rf

Fig. 13-23 — Front view of the rf speech clipper. The unit is built in an LMB CO-3 cabinet.

syllabic compressor, producing up to 6 dB improvement in the intelligibility threshold at a distant receiver. The Collins Radio Company uses an alc system with dual time constants (Fig. 13-22D) in their S/Line transmitters, and this has proven to be quite effective.

Heat is an extremely important consideration in the use of any speech processor which increases the average-to-peak power ratio. Many transmitters, in particular those using television sweep tubes, simply are not built to stand the effects of increased average input, either in the final-amplifier tube or tubes or in the power supply. If heating in the final tube is the limiting factor, adding a cooling fan may be a satisfactory answer.

ALC CIRCUITS

Typical circuits are shown in Fig. 13-22. The circuit at A can be applied to amplifiers using any type of tube or circuit – i.e., triode or tetrode, grid driven or cathode driven. It works directly from the plate of the amplifier, taking a relatively small sample of the rf voltage through the capacitive voltage divider, C1C2. This is rectified by the diode, CR1, to develop a control voltage, negative with respect to ground, across the 1-megohm load resistor. The diode is back biased from a positive voltage source, the bias voltage being adjustable by means of the "level-set" potentiometer R1. CR1 will be unable to rectify until the rf voltage exceeds the bias voltage, and by setting R1 properly no gain-control voltage will develop until the rf amplitude is close to the peak-envelope point.

The dc control voltage is used to increase the negative bias on a low-level amplifier or mixer, preferably the former, as shown at E. The controlled tube should be of the variable-μ type. The time constant of the control-voltage circuit should be such that the control voltage will rise rapidly when rectification begins, but will hold down the gain during syllables of speech. The time constant can be adjusted by shunting additional capacitance, C3, across the 1-megohm resistor, R2, in Fig. 13-22A (the .01 μF capacitor is simply an rf bypass). A value of about 0.1 μF is representative.

The capacitive divider C1C2 should be designed to apply about 20 volts peak to CR1 when the amplifier is delivering peak-envelope output. The total capacitance of C1 and C2 in series should not exceed 5 to 10 pF – i.e., should be small in comparison with the tank tuning capacitance so tuning will not be seriously affected. For estimating values, the amplifier peak output rf voltage can be assumed to be equal to 75 percent of the dc plate voltage. For example, if the amplifier dc plate voltage is 1500, the peak rf voltage will be of the order of $0.75 \times 1500 = 1100$ volts, approximately. Since about 20 volts are required, the divider ratio would be 1100/20, or 55 to 1. This is also (approximately) the ratio of the capacitance of C2 to that of C1. Thus, if C1 is 5 pF, C2 should be $5 \times 55 = 270$ pF.

Tetrode Grid Rectification

The circuit of Fig. 13-22B is less flexible and can be used only with grid-driven tetrodes operated Class AB_1. It makes use of the fact that a small amount of rectification occurs in the grid-cathode circuit of a tetrode AB_1 amplifier before the driving voltage actually causes the net grid voltage to be zero and the grid current becomes large enough to cause flattening. This rectification causes a small audio-frequency current to flow in the grid circuit.

In the circuit show, the current causes an af voltage to be developed in the secondary of transformer T1; this voltage is rectified by CR1 and filtered to negative dc by R2 and C3. The resultant dc voltage is used to control an amplifier or mixer as in Fig. 13-22E. The time constant of R2,C3 should be chosen as described above. Resistance-capacitance coupling can be substituted for the transformer, although when this is done a voltage-doubling rectifier is generally used so the control voltage will be stepped up. Alternatively, an audio amplifier can be inserted between the grid circuit and the rectifier, as shown in Fig. 13-22C.

Controlled Stage

The circuits shown here can be modified as necessary to suit individual amplifier and exciter circuits. The details will vary with the actual equipment, but should not be difficult to work out if the principles of the system are understood. Any of the circuits are capable of developing the few volts of control voltage necessary to prevent the amplifier from being driven into the nonlinear region. The greater the gain between the control amplifier and the stage at which the control voltage is taken off (usually the final amplifier) the less control voltage required. That is, the control voltage should be applied to an early stage in the exciter. Preferably, too, the stage should be one operating on a frequency different from that of the final stage, to reduce the possibility of unwanted feedback. Examples of an IC (F) and tube alc-controlled amplifiers (E) are shown in Fig. 13-22.

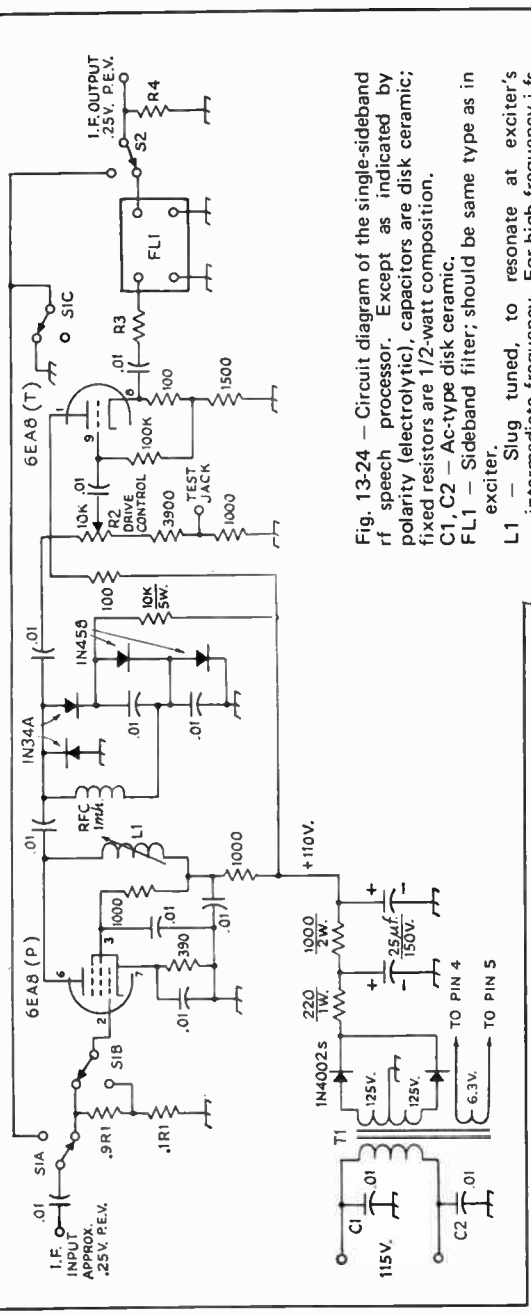

Fig. 13-24 — Circuit diagram of the single-sideband rf speech processor. Except as indicated by polarity (electrolytic), capacitors are disk ceramic; fixed resistors are 1/2-watt composition.
C1, C2 — Ac-type disk ceramic.
FL1 — Sideband filter; should be same type as in exciter.
L1 — Slug tuned, to resonate at exciter's intermediate frequency. For high-frequency i-fs (e.g., 9 MHz) L1 can resonate with the stray circuit capacitance, which is of the order of 25 pF. For 455-kHz i-f, additional capacitance such as 240 pF can be used in parallel with L1. Approximate inductance values are 15 µH for 9 MHz and 500 µH for 455 Hz.
R1 — Load resistance for filter (in exciter) as recommended by filter manufacturer. Sections shown represent about 90 and 10 percent, respectively, of the total resistance.
R2 — 10,000-ohm composition control, linear taper.
R3 — Filter manufacturer's recommendation for source impedance, less 500 ohms (output impedance of cathode follower).
R4 — Filter load resistance recommended by manufacturer for FL1. (0.1 megohm for Collins mechanical filter).
S1 — 3-pole, 2-position ceramic switch.
S2 — 1-pole, 2-position ceramic switch.
T1 — 250 volts ct, 25 mA (Knight 54 A 2008).

AN RF SPEECH CLIPPER

The speech-processor circuit of Fig. 13-24 was described in July 1967 *QST* by Sabin, WØIYH.

The signal input to the rf clipper unit should be about 0.25 volt peak envelope. The signal at the clipper diodes should be enough to make up the loss in the drive control, cathode follower and filter, and to drive the rig to full output. The diode clipper circuit shown gives flat clipping, good symmetry and freedom from rectification effects which can spoil the clipping symmetry during the transient conditions encountered in speech waveforms. An important feature is that the clipping level is independent of line-voltage fluctuations. Also, hard, flat clipping prevents overloading the transmitter on the strongest peaks.

For 20 dB of clipping, a total voltage increase of forty (32 dB) is required. The amplifier should be biased so that the control grid does not go positive on peaks. The inductor L1 in the plate circuit resonates with stray capacitance, about 25 pF, at the i-f. This adjustment may be made with a small one-tone input. Before clipping the plate load is essentially 15,000 ohms. During clipping the plate load drops to less than 100 ohms. After all adjustments are completed, recheck the resonance of the tuned circuit. On cw it is best to switch the clipper out of action altogether.

The clipper unit is built on a small chassis which is bolted to the exciter cabinet for good grounding. The coax leads must be kept very short to prevent distortion of the filter response. Leakage paths around the filter must be eliminated by careful shielding and lead dress. The filter should be kept away from both ac and dc magnetic fields. A soft-iron cover for the filter may be needed. Stray rf from high-power amplifiers should not be allowed to sneak in and gum up the works.

When first starting out with a clipper it is easy for the operator to get confused because of the irregular behavior of meters and scope patterns with speech signals. The best place to begin is to tune up the transmitter on a two-tone audio signal with the clipper in the "tune" position. The level of the two-tone signal should be set just below the point at which clipping begins (see Fig. 13-21). This measurement is made with a scope at the clipper test jack. The drive control and all succeeding adjustments may then be set for best output and linearity, in the usual way. If alc is used the peak envelope signal should be set, using the

drive control, right at the point where alc begins.

Now switch over to microphone input. Turn up the mic. gain until the same peak output is indicated on the output monitor scope. The alc meter will flicker occasionally. Now turn the switch on the clipper to the "clip" position. You now have about 20 dB of peak clipping. While talking steadily into the microphone, adjust the drive control so that the proper peak level is maintained. The peak-envelope meter will kick up on scale very frequently and the final plate meter will kick up to a level which is just about equal to that obtained in the two-tone test; that is to say, on voice peaks the peak-to-average ratio will approach 3 dB for short intervals. The ratio over a longer period will be about 9 dB.

The mike gain control can be used to make minor adjustment of clipping. A little experience will enable the operator to set the gain for good quality and lively meter action. Avoid the temptation to run the gain way up. The rig won't flat-top, of course, but distortion and room noise can become excessive and communications effectiveness is hardly improved at all.

Any change of gain after the clipper due to mistuning or line-voltage changes will cause the peak level to become too high or too low. If alc is applied to the exciter after the clipper, it can be used to adjust the drive level. One or two dB of fast-attack, slow-release type alc should be used. If alc is applied ahead of the clipper, it will be worthless.

Fig. 13-25 — The audio processor shown in Fig. 13-26 is constructed in a Ten-Tec JW-4 enclosure.

AN AUDIO SPEECH PROCESSOR

Figs. 13-25 and 13-26 show an audio speech processor developed from designs by W6ZEM and WB2EYZ. This unit is intended to be used outboard from an ssb transmitter. It combines audio compression and clipping to produce up to 3 dB improvement (double) in the average transmitter output power. In practice, the processor proves to be worthwhile on any circuit where the received signal at the distant station is weak or fading.

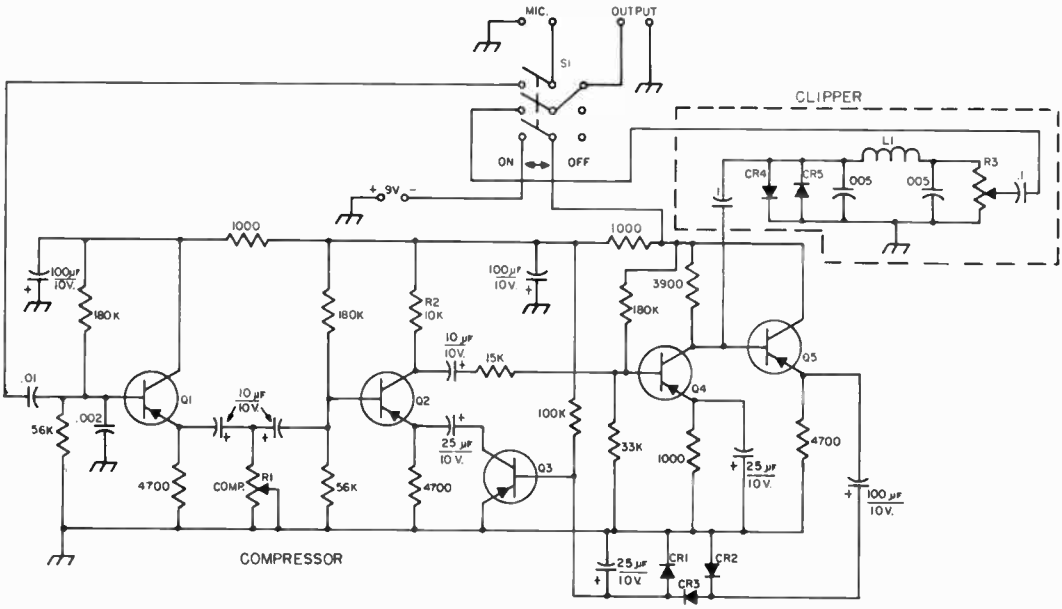

Fig. 13-26 — Circuit diagram of the speech compressor. Capacitances are in µF; capacitors with polarity marked are electrolytic, others are ceramic. Resistances are in ohms (k = 1000); fixed resistors are 1/2-watt composition.

CR1-CR5, incl. — 1N270 or equivalent.
L1 — 3-3.5 henrys, miniature type desirable.
Q1-Q5, incl. — 2N1375 or equivalent.
R1 — 10,000-ohm control, audio taper.
R2 — For text reference.
R3 — 50,000-ohm control, linear taper.
S1 — 3-pole double-throw toggle switch.

Fig. 13-27 — Interior view of the audio compressor/clipper. All small components are mounted on an etched circuit board, although point-to-point wiring can be used if desired.

Q1 is connected as an emitter follower, allowing the use of high-impedance microphones by raising the base input impedance of the transistor to about 50,000 ohms. A second audio amplifier, Q2, is gain controlled by a dc voltage fed to the base of Q3. Q3 raises or lowers the gain of Q2 by varying the effect of the emitter bypass capacitor. The control voltage is developed by Q4 and Q5 and rectified by CR1-CR3, incl. The slow decay time constant for the compressor is provided by the 25-μF capacitor connected from the base of Q3 to ground. The audio output from the compressor section is clipped by CR4 and CR5. Harmonic audio frequencies above 3 kHz that are produced in the clipping process are removed from the output by a pi-section filter. The filter includes a UTC DOT-8 choke; however, any choke having an inductance approximately 3 H should perform satisfactorily.

Construction

As in the construction of most audio devices, layout of components is not critical. For example, the circuit components can be laid out physically just as they are depicted in the schematic, with satisfactory results. Layout details are left to the reader. Other than good construction practices there are no restrictions about component placement.

Adjustment

The limitations of the processor must be realized. The best that it can do is double your average output when using good-quality equipment that already includes such features as alc. Beyond this point there will be noticeable deterioration of the voice quality and an objectionable increase in background noise. The optimum setting is just below the level where these two conditions occur.

Only one adjustment actually exists, since R3 merely serves to set the output initially. Experience has shown that the optimum adjustment for R1 is about 1/4 to 1/3 turn (100 ohms on an audio-taper potentiometer). Once set, this adjustment should satisfy all operating conditions from armchair ragchewing to pulling out the rare ones. A condition that can justify a higher setting of R1 is when an operator is distant from the microphone, provided that background noise is nonexistent. Tests performed on the air verified that although more dc plate current could be drawn, the punch power no longer increased when the limiting control R1 reached the point of noticeable distortion.

Adjustment of the processor can be facilitated if you are equipped with a hi-fi system. By connecting the processor to the auxiliary input of the amplifier and attaching headphones to a suitable output, one can actually hear the optimum adjustment while speaking.

SINGLE SIDEBAND TRANSCEIVERS

A "transceiver" combines the functions of transmitter and receiver in a single package. In contrast to a packaged "transmitter-receiver," it utilizes many of the active and passive elements for both transmitting and receiving. Ssb transceiver operation enjoys widespread popularity for several justifiable reasons. In most designs the transmissions are on the same (suppressed-carrier) frequency as the receiver is tuned to. The only practical way to carry on a rapid multiple-station "round table" or net operation is for all stations to transmit on the same frequency. Transceivers are ideal for this, since once the receiver is properly set the transmitter is also. Transceivers are by nature more compact than transmitter-receivers, and thus lend themselves well to mobile and portable use.

Although the many designs available on the market differ in detail, there are of necessity many points of similarity. All of them use the filter type of sideband generation, and the filter unit furnishes the receiver i-f selectivity as well. The carrier oscillator doubles as the receiver (fixed) BFO. One or more mixer or i-f stage or stages will be used for both transmitting and receiving. The receiver S meter may become the transmitter plate-current or output-voltage indicator. The VFO that sets the receiver frequency also determines the transmitter frequency. The same signal-frequency tuned circuits may be used for both transmission and reception, including the transmitter pi-network output circuit.

Usually the circuits are switched by a

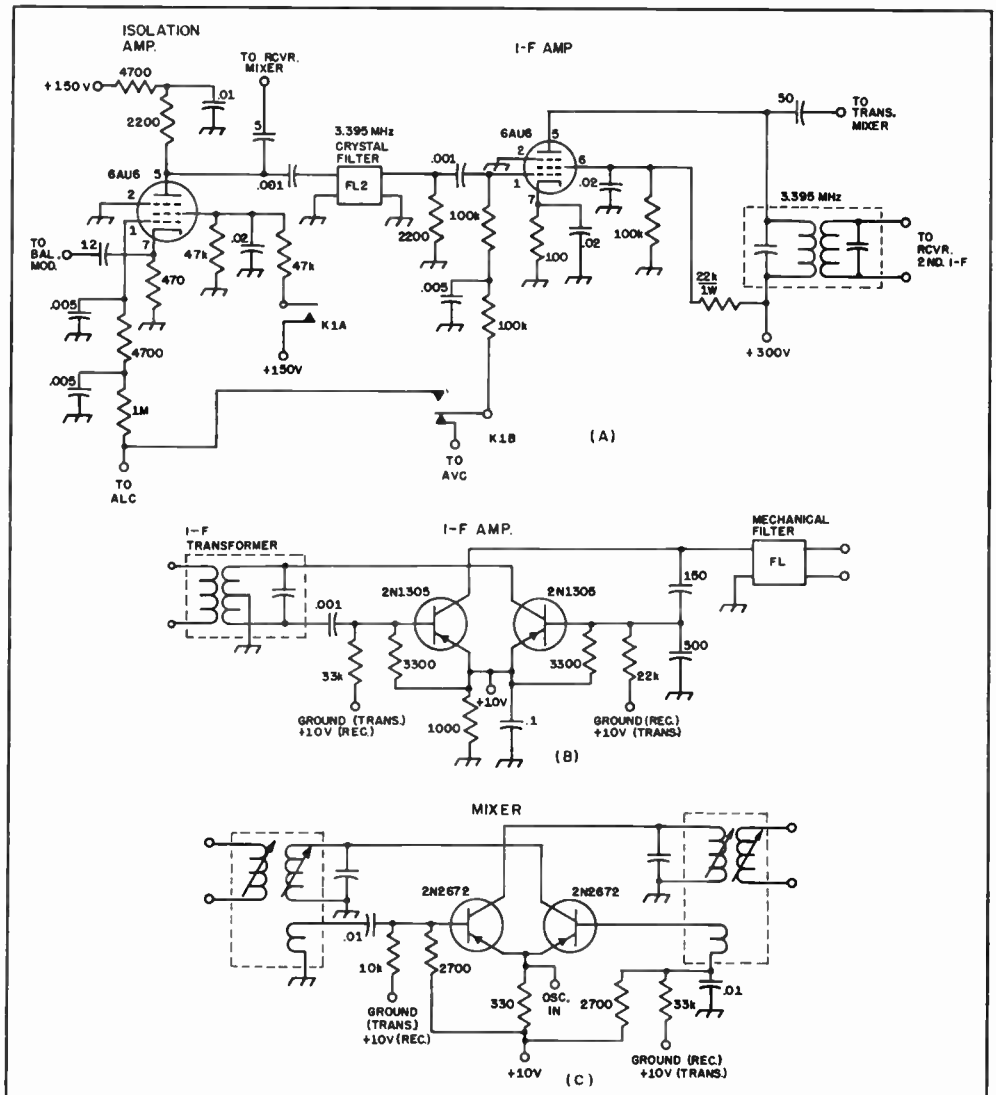

Fig. 13-28 — Transceiver circuits where a section is made to operate on both transmit and receive. See text for details.

multiple-contact relay, which transfers the antenna if necessary and also shifts the biases on several stages. Most commercial designs offer VOX (voice-controlled operation) and MOX (manual operation). Which is preferable is a controversial subject; some operators like VOX and others prefer MOX.

Circuits

The use of a filter-amplifier combination common to both the transmitter and receiver is shown in Fig. 13-28A. This circuit is used by the Heath Company in several of their transceiver kits. When receiving, the output of the hf mixer is coupled to the crystal filter, which, in turn, feeds the first i-f amplifier. The output of this stage is transformer coupled to the second i-f amplifier. During transmit, K1 is closed, turning on the isolation amplifier that links the balanced modulator to the band-pass filter. The single-sideband output from the filter is amplified and capacitance-coupled to the transmitter mixer. The relay contacts also apply alc voltage to the first i-f stage and remove the screen voltage from the second i-f amplifier, when transmitting.

Bilateral amplifier and mixer stages, first used by Sideband Engineers in their SBE-33, also have found application in other transceiver designs. The circuits shown in Fig. 13-28B and C are made to work in either direction by grounding the bias

divider of the input transistor, completing the bias network. The application of these designs to an amateur transceiver for the 80-10 meter bands is given in the 5th Edition of *Single Sideband for the Radio Amateur.*

The complexity of a multiband ssb transceiver is such that most amateurs buy them fully built and tested. There are, however, some excellent designs available in the kit field, and any amateur able to handle a soldering iron and follow instructions can save himself considerable money by assembling an ssb transceiver kit.

Some transceivers include a feature that permits the receiver to be tuned a few kHz either side of the transmitter frequency. This consists of a voltage-sensitive capacitor, which is tuned by varying the applied dc voltage. This can be a useful device when one or more of the stations in a net drift slightly. The control for this function is usually labled RIT for *receiver independent tuning.* Other transceivers include provision for a crystal-controlled transmitter frequency plus full use of the receiver tuning. This is useful for "DXpeditions" where net operation (on the same frequency) may not be desirable.

SSB Bibliography

Single Sideband for the Radio Amateur, by the American Radio Relay League, 5th Edition, 1970.

Hennebury, *Single Sideband Handbook*, Technical Material Corporation, 1964.

Pappenfus, Bruene and Schoenike, *Single Sideband Principles and Circuits*, McGraw-Hill, 1964.

Amateur Single Sideband, by Collins Radio Company, 1962.

TESTING A SIDEBAND TRANSMITTER

To observe the rapidly changing levels in a sideband transmitter an oscilloscope is absolutely necessary. No meter can keep up with the dynamic variations encountered with the human voice. There are monitor scopes sold that will fill the bill completely, or any shop-type scope which has an internal horizontal sweep generator and external vertical deflection-plate connections may be used with the tuning unit to be described. Several inexpensive scope kits are also available.

An audio generator is the other piece of test equipment required. The standard sort of audio generator will do; one often can be borrowed from local RTTYers or high-fi buffs, or a simple audio generator may be construction to give a selection of frequencies. See Chapter 17.

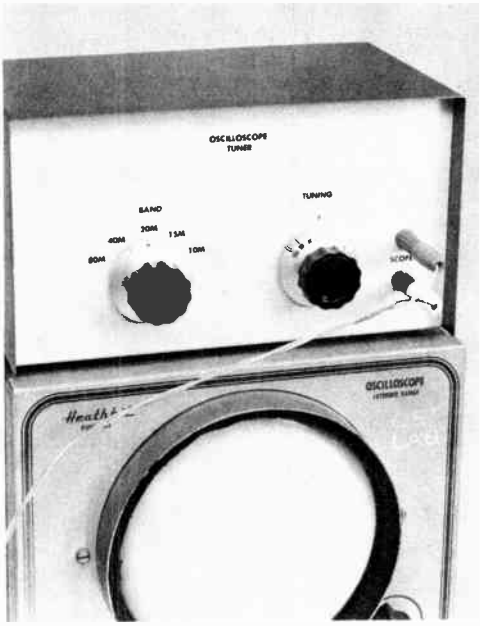

Fig. 13-29 — An oscilloscope adaptor permits monitoring of the output rf envelope from an hf transmitter. Any shop-type oscilloscope may be used.

The generator should have good sine-wave output and low distortion. A two-tone generator makes testing even easier.

For the service-type oscilloscope an rf pickup unit is used to sample the output of the transmitter, and a tuned circuit builds up the rf voltage to provide adequate vertical deflection for the scope. See Figs. 13-29 and 13-31. The pickup unit is constructed in a 4 × 2 1/2 × 2 1/2-inch Minibox. The tuning unit has link-coupled input; each link is made by winding turns of hookup wire around the center of the coil and cementing it down. The shaft of the variable capacitor must be insulated from ground. In the unit in the photograph, the capacitor is mounted on a 3/4-inch standoff insulator.

Only a small amount of energy is used by the tuning unit, so the pickup may be left in the transmitter-output line for on-the-air monitoring.

A typical test setup is shown in Fig. 13-30. All testing should be done with a dummy load. The audio or two-tone generator is connected to the microphone jack of the transmitter, except when a mike is used for speech patterns. The generator should be adjusted so that its output is about at the level of the microphone normally used. Gain adjustments should be made at the transmitter with the mike gain control. The pickup unit is inserted between the transmitter and dummy load, and the tuning unit should be placed so short connections can be made to the scope. Don't forget to ground the scope to the tuning unit. A length of RG-58/U or RG-59/U is used to connect the tuning unit to the pickup unit.

The transmitter to be tested should be tuned up in the cw position, or in the sideband position with a single audio tone injected for normal input. Then adjust the tuning unit to give about half-scale deflection on the scope face, and adjust on the horizontal sweep generator in the oscilloscope.

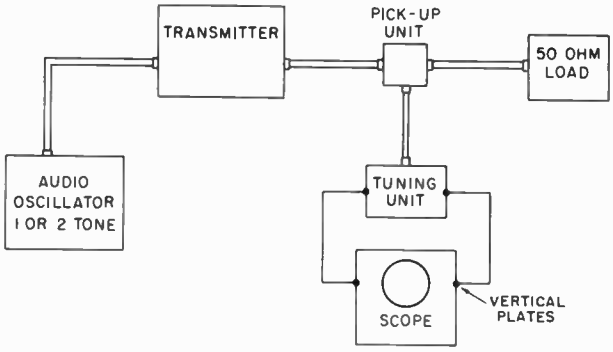

Fig. 13-30 — A typical test setup for a sideband transmitter.

Speech Patterns

Speech patterns offer a rather poor way of telling what is going on in the sideband transmitter because they come and go so fast. Yet with a little experience one can learn to recognize signs of transmitted carrier and flattening. These are useful later in monitoring on-the-air operation with a scope to about 30 Hz.

Connect a microphone to the transmitter, set the oscilloscope sweep for about 30 Hz and say a few words. The number "five" will produce a "Christmas tree" pattern similar to Fig. 13-33. Each different word will produce a different pattern, which is one of the reasons why speech patterns are so hard to interpret. The important thing here is to observe the peaks to see if they are sharp, as in Fig. 13-33A. Fig. 13-33B is the number "five" again but this time the mike gain is set way too high; the final stage is being overdriven resulting in clipping of the voice peaks as the final tube reaches plate-current saturation. Underloading the final stage will produce the same result. Operating a transmitter this way will produce a lot of splatter, making you unpopular with your neighbors on the band. Usually, reducing the gain control setting a little will remove all signs of flattening. Try different settings of the gain control until you can tell a correct pattern from one showing clipping.

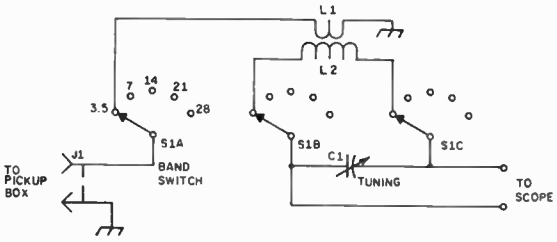

Fig. 13-31 — Schematic diagram of the oscilloscope adaptor. Output connections are made through nylon binding posts (Johnson 111-102). Capacitance is in picofarads (pF).

C1 — Small variable (Hammarlund HF-100).
J1 — Phono type.
L1 — Link wound over L2 using hookup wire as follows: 3.5 MHz, 3 turns; 7 MHz, 2 turns; 14, 21 and 28 MHz, 1 turn.
L2 — 3.5 MHz: 35 turns No. 24, 1 1/4-inch dia., 32 turns per inch (B&W Miniductor 3020). 7 MHz: 21 turns No. 20, 1-inch dia., 16 turns per inch (B&W 3015). 14 MHz: 6 turns No. 20, 3/4-inch dia., 16 turns per inch (B&W 3011). 21 MHz: 8 turns No. 18, 5/8-inch dia., 8 turns per inch (B&W 3006). 28 MHz: 4 turns No. 18, 1/2-inch dia., 4 turns per inch (B&W 3001).
S1 — Phenolic rotary type, 3-pole, 3-section, 2-6 position (5 used) non-shorting contacts (Centralab 1421).

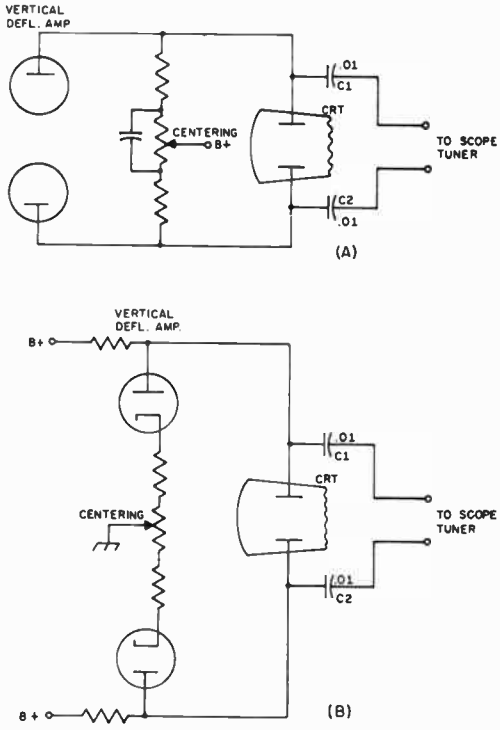

Fig. 13-32 — Modifications to a general-purpose oscilloscope to allow direct input to the vertical deflection plates. A, connection for a scope where centering is done in the B-plus lead and B, where centering is accomplished at the cathodes of the vertical amplifier tubes. The capacitors used for C1 and C2 should have a rating of 1000 volts or more. Connections can be brought out to the front or rear panel of the oscilloscope.

(A) (B)

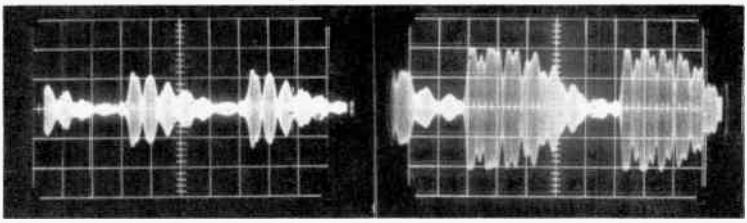

Fig. 13-33 — (A) Speech pattern of a correctly adjusted sideband transmitter. (B) The same transmitter with excessive drive causing peak clipping in the final amplifier.

(A) (B)

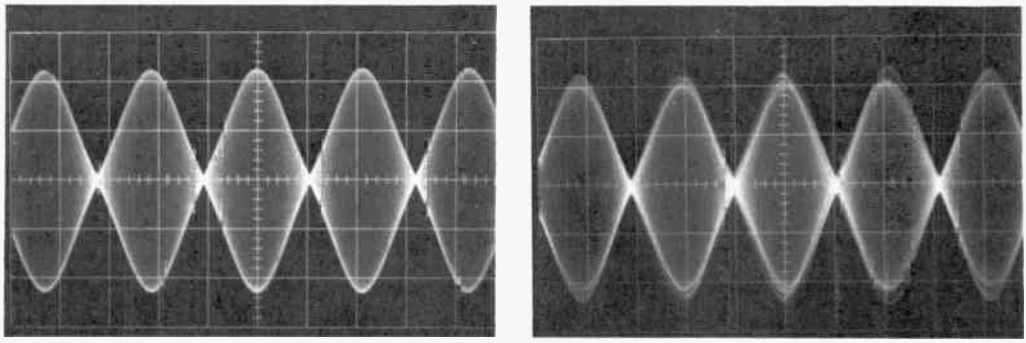

(C) (D)

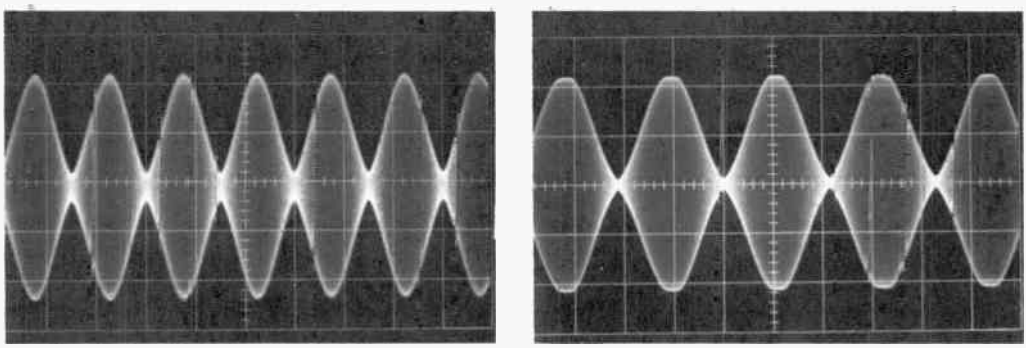

(E) (F)

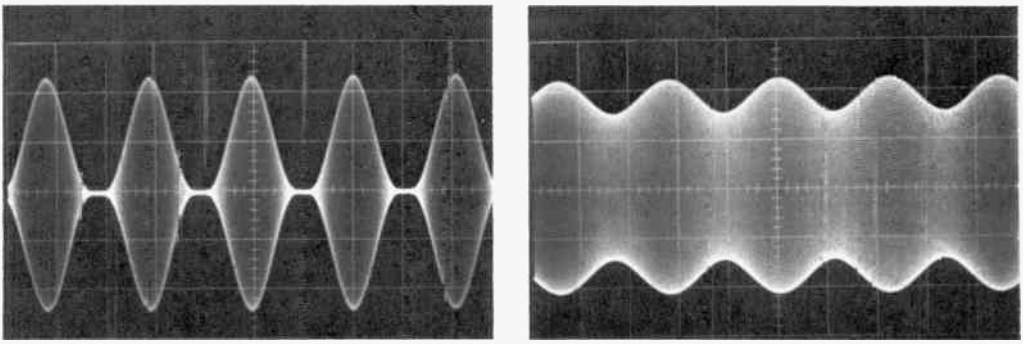

Fig. 13-34 — Sideband two-tone test patterns. (A) Output pattern of a properly-adjusted transmitter. (B) A similar pattern to A, but showing hum on the signal. (C) Unequal tones (see text). (D) Excessive drive, causing flattopping and distortion. (E) Final amplifier incorrectly biased. (F) Single-tone showing modulation pattern caused by a partially suppressed carrier.

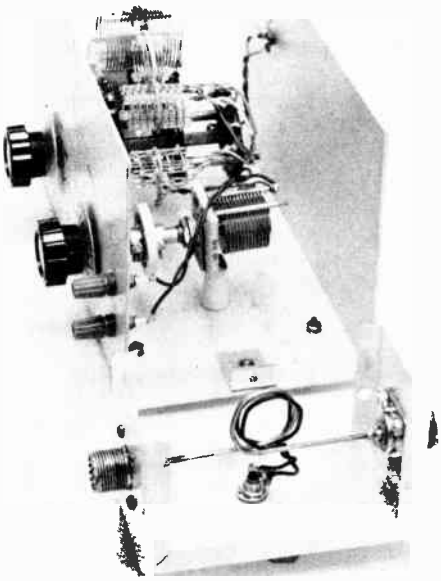

Fig. 13-35 – Interior view of the tuning unit and its pickup box. The variable capacitor is used to adjust the vertical deflection on the scope. The tuning unit should be mounted near the scope so that short interconnecting leads may be used. The pickup box consists of a No. 16 conductor forming a single-turn loop. Next to this loop is placed a two-turn second loop of plastic-covered hookup wire.

If, when the mike gain is reduced to zero, the scope pattern shows you still have some output, you may be transmitting carrier. Adjustment of the balanced modulator, which will be covered later, will be necessary.

Two-Tone Tests

A sideband transmitter should be a linear device from mike jack to output connector – for each audio frequency put in you should get out an rf frequency with no distortion of the wave form. The basis of a two-tone test is that you inject two audio signals, from which you should get out only two rf signals; No tube is ever perfectly linear, so some mixing of the two tones will occur, but all of the new signals produced should be so weak in comparison with the main output of the transmitter that you cannot detect their presence in a scope pattern. What you will see is the pattern of two sine-wave signals as they add and subtract, forming peaks and valleys.

A two-tone test's main advantage is that it will produce a stationary pattern that may be examined for defects. It is not easy to tell with your eye exactly what is a pure sine wave on a scope. Complex patterns are even more difficult, so it is a good idea to draw the correct pattern carefully on a piece of tracing paper, which may be placed over the actual pattern on the scope face for comparison. Remember that this test will show major defects in the transmitter only.

To make the test, apply the output of the two-tone generator to the mike jack, set the 'scope sweep for about 200 Hz, and check the pattern to see that both tones are of equal level. If they are not equal level, the valleys of the wave form will not meet at a single point on the zero line. Fig. 13-34A shows the correct pattern; note that the crossover is in the form of an X. Another way to obtain a two-tone test signal is to use a single audio tone and unbalance the carrier to the point where it forms the pattern shown in Fig. 13-34A.

Examine closely Fig. 13-34A – this is the correct pattern. Note the clean rounded peaks and straight sides of the envelopes, and again how an X is formed at the crossover. Fig. 13-34D shows mild flattening of the peaks. The cause is an amplifier stage being overdriven or underloaded. Cutting the drive level or increasing the loading should result in the Fig. 13-34A pattern.

Incorrect bias adjustment can also cause a stage to be nonlinear. This defect will show up as rounding of the crossover points as in Fig. 13-34E. The manufacturer's instruction manual should be consulted for the proper bias value and the location of the bias control. This control should be adjusted for the proper operating bias. Incorrect bias will also show up as high or low values of resting plate current. If a correct resting current and pattern cannot be obtained the tube may be bad and should be replaced.

If the two tones used are not of equal amplitude, the pattern of Fig. 13-34C results. Fig. 13-34B is a correct pattern showing hum modulation.

Carrier Balance

For carrier-balance adjustments only one tone is used. The carrier shows up as a sine-wave modulation, similar to what you may have seen in a-m. The carrier-balance control(s) should be adjusted until the sine-wave modulation disappears. Fig. 13-34A shows the single-tone test with sine-wave modulation caused by a partially suppressed carrier.

The location of the carrier-balance controls may be found in the instruction manual if they are not located on the front panel. Phasing rigs usually have two controls, while the filter types have one control and a variable capacitor. In either case the action of these adjustments is somewhat interlocking. The first should be adjusted, then the second, repeating in turn until the carrier is nulled out.

Carrier balance may also be adjusted with the aid of a communications receiver if it has an S meter. The receiver should be coupled to the transmitter so you have a strong, S9 signal. Then adjust the balanced modulator as before for the least amount of indicated signal on the S meter. During this test the mike gain should be reduced to zero, so no modulation appears on the carrier.

TRANSISTORIZED VOX

Voice-operated relay (VOX) provides automatic transmit-receive switching. It is a useful accessory, and one that can add to the pleasure of operating. Owners of commercially made transmitters that have been designed only for push-to-talk operation, and home constructors who are "rolling their own" rigs, will find that this unit, shown in Fig. 13-36, provides excellent VOX operation and that it can be used with their existing station equipment.

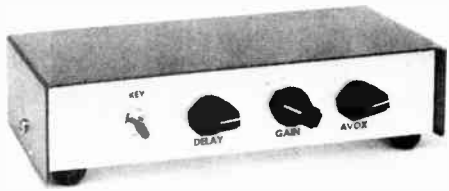

The Circuit

Operation of a VOX circuit is not complicated. A JFET transistor, Q1 in Fig. 13-36, operates as the first audio amplifier. The high input impedance of this type of transistor is desirable, because the use of high-impedance microphones is nearly universal in the amateur service. Q2 and Q3 provide additional amplification of the audio signal. The gain of these two stages is high. But, if additional gain is needed, bypass capacitor C7 may be added across the emitter resistor of Q2. With all but the low-output dynamic microphones, however, this capacitor should not be necessary. The audio output from Q3 is rectified by CR1 and CR2.

The dc output from the audio-signal rectifier is amplified by Q5 and fed to Q6. With no signal on its base, Q6 draws no collector current, holding the voltage on the base of Q7 near zero until the input signal reaches a sufficient level to turn the transistor on. Q7 will then turn on, drawing collector current through the relay coil, closing K1. The transistor that operates the relay is protected by CR5 from transient spikes generated as the current changes in the coil of K1. Provision is made for turning K1 on with a front-panel switch, S1, which holds the relay closed for a period of transmitter tuning or other adjustments.

A delay circuit, borrowed from ON5FE, is included to hold K1 closed for a short time after the audio-signal input ceases. This delay keeps the relay from chattering or opening during the short pauses between words or syllables. The length of the time delay is determined by the value of C15 and the setting of the DELAY control, R22. The advantage of ON5FE's circuit is that a relatively low value of capacitance can be used. Other circuits, which use delay capacitors of 50- to 200-μF, have slow turn-on action because series resistances used in the circuits prevent the large-value delay capacitor from charging instantaneously. A slow turn-on time is definitely undesirable, as it results in clipping of the first word spoken.

Audio output from a station receiver can key the VOX; to prevent this problem, an anti-VOX circuit is included. A sample of the receiver audio is amplified by Q4 and rectifed by CR3 and CR4. The output of this rectifier is negative in polarity and opposes the positive voltage developed by CR1 and CR2. Thus, when controls R19 and R20 are correctly set, any pickup from the speaker does not activate the VOX, as the positive and negative voltages cancel, and Q5 does not operate. A short time constant is desirable on the output of the anti-VOX rectifier; C11 provides this function. Receivers with 4- to 16-ohm speakers require amplification of the audio signal sampled across the speaker leads. If the receiver audio is taken

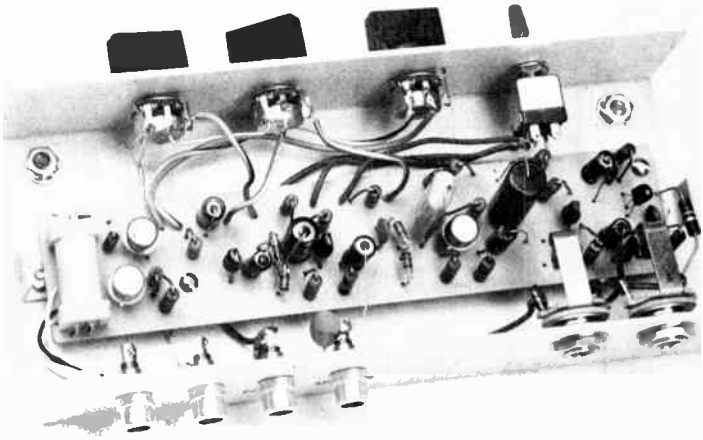

Interior view. With the exception of the controls, connection jacks, and rf bypass capacitors, all components are mounted on an etched-circuit board.

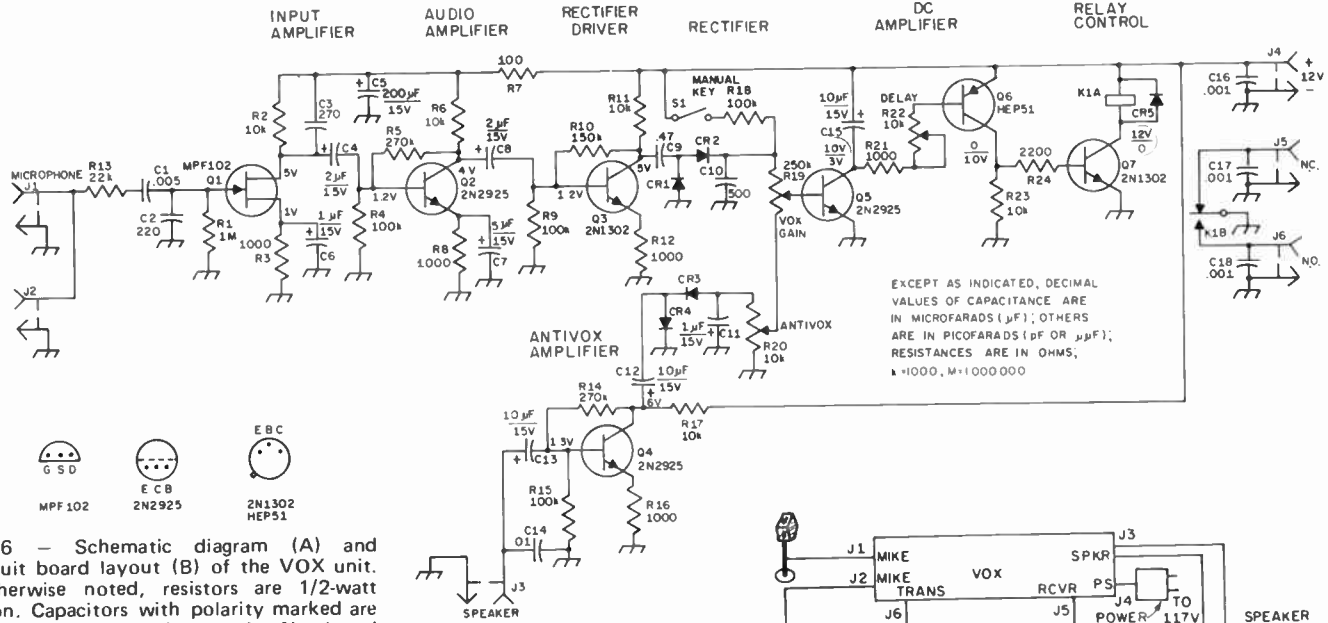

Fig. 13-36 — Schematic diagram (A) and etched circuit board layout (B) of the VOX unit. Unless otherwise noted, resistors are 1/2-watt composition. Capacitors with polarity marked are electrolytic; others are disk ceramic. Numbered components that are not listed below are for circuit-board reference.

C9 — Mylar or other low-leakage type.
CR1-CR4, incl. — Germanium diode, 1N67A or similar.
CR5 — Silicon, 50 PRV or more.
J1, J2 — Phone jack, panel mount.
J3-J6, incl. — Phono type.
K1 — Reed relay, spdt contacts, 12-V coil (Magnecraft W104MX-2).
R19 — Linear-taper carbon control (Mallory MLC254L).
R20, R22 — Linear-taper carbon control (Mallory MLC14L).
S1 — Miniature toggle (Radio Shack 275-1546 or 275 326).

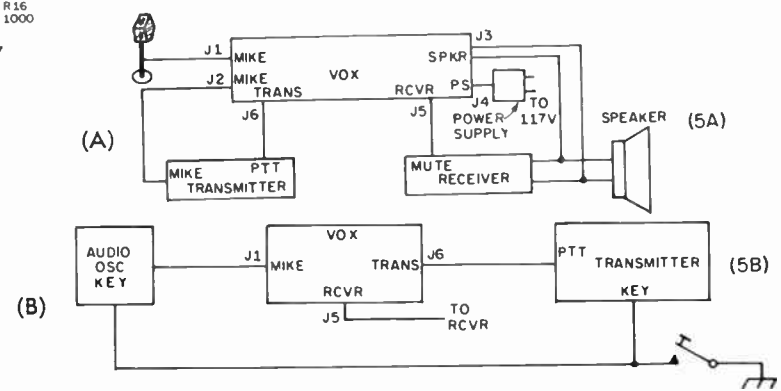

Fig. 13-37 — Typical connections for the VOX adaptor when used for (A) phone and (B) cw operation.

from a 600-ohm speaker lead, or if the receiver has a high-impedance audio output, the Q4 amplifier stage may not be necessary.

Construction

The VOX unit, except for the controls and connection jacks, is built on a small etched circuit board. This board has a long, narrow shape, giving a modern shape factor to the VOX housing. Parts layout is not critical and it may be adjusted to suit one's individual requirements.

The case for the VOX is homemade. Two pieces of sheet aluminum, cut to size, are bent into U shapes. Small L brackets, fastened to each end of the base, are the points into which the sheet-metal screws that hold the cover are fastened. The overall size of the housing is 1 1/2 X 7 X 3 inches. Phone jacks are used for the microphone connections, and other input connections are made through phono-type jacks. The types of connectors used should mate with the other plugs and jacks used in an individual's ham shack. Unwanted rf pickup is always a potential hazard with transistor equipment. So, standard rf suppression techniques are used on the circuit board, and all connection points to the unit are bypassed.

A wide variety of npn transistors can be used; almost any of the small-signal, high-beta types are suitable. The bias resistors for the 2N2925s may have to be changed if a different type of transistor is substituted, however. When soldering connections to the etched board, care should be exercised, as excessive heat can damage transistors and diodes, as well as cause the copper foil to lift off the board. Also, correct polarity should be observed when installing the electrolytic capacitors. The unit's power supply is a 12-volt transistor-radio-battery eliminator, the Midland 18-112. Any of the 9- or 12-volt supplies sold for use with portable radios or tape recorders should do. A "stiff" supply is not necessary. The VOX does draw quite a bit of current, however, so small batteries are not suitable. Tests indicate that any voltage between 5 and 15 volts will provide satisfactory operation.

Operation

Connecting the VOX is easy. The microphone is plugged into one of the mic jacks, J1 or J2, and a patch cord is used to connect the remaining mic jack to the transmitter, as shown in Fig. 13-37A. The relay contact leads are connected to the transmitter PTT input, from J6. If a separate receiver is to be used, connect a cable from J5 to the receiver mute connections. The receiver audio can be sampled at the speaker terminals and fed to J3. The GAIN control, R19, should be advanced until even softly spoken words produce VOX operation. The DELAY time (R22) can be set to suit one's personal preference. The anti-VOX adjustment is set last. Place the microphone near the speaker, and tune in a loud signal. Then, advance the ANTIVOX control until the signal from the speaker does not operate the relay, even during periods when loud pops and static crashes are present.

A VOX adaptor can also be put to work to provide semibreak-in for cw operation. The connections for this are shown in Fig. 13-37B. Output from an audio oscillator or the audio signal from the monitor in an automatic keyer is needed to key the VOX. Only a low-level sample of the oscillator output is required; .01 volt will assure good operation. If no oscillator is available, one can be built from a commercial kit such as the RCA KC4002. Of course, both the audio oscillator and the transmitter must be keyed simultaneously.

A TRANSVERTER FOR 1.8, 21, OR 28 MHZ

Owners of mono- or triband transceivers often get the urge to try "top band," or to chase DX on the 15- and 10-meter bands. Converting a transceiver to cover a frequency range for which the rig was not designed is difficult indeed. A far better approach is to build an outboard transverter, such as described here, for the desired band.

The Circuit

A schematic diagram of the transverter is given in Fig. 13-38. V1A operates as a crystal oscillator to produce 5.8-, 17.5-, or 32.5-MHz local-oscillator energy.

This stage operates continuously. Output from V1A is fed to the transmitting mixer, V1B, and to the receiving mixer, Q2. During transmit on the 160-meter band, for example, 3.9 MHz ssb or cw energy is supplied to the cathode of V1B. This signal is mixed with the 5.8-MHz output of the local oscillator at V1B, producing a 160-meter output which is amplified in the following 6GK6 and 6146B stages. A high-*Q* tuned circuit is used to couple the output of V2 to the grid of the parallel-connected 6146 tubes. The PA stage delivers approximately 100-watts PEP output.

During receive, an incoming signal is amplified by Q1, a dual-gate, diode-protected MOSFET. The output from the rf amplifier is mixed with local-oscillator energy by Q2 to produce a receiving i-f of 3.5 to 4 MHz. Operation on the 10- and 15-meter bands is achieved in the same way. The inductance of the coils, the value of the capacitors, and the frequency of the crystal in frequency-determining circuits are the only changes required to change bands. Changeover from transmit to receive is accomplished by K1, which is controlled by the associated transceiver.

The popular "economy" design shown in the Power Supply chapter of this *Handbook* is employed for the power supply. The 6.3- and 5-volt windings of T1 are series-connected to provide 11.5 volts to power K1 and the receiving converter. The windings must be phased properly to prevent cancellation of the voltages. If no

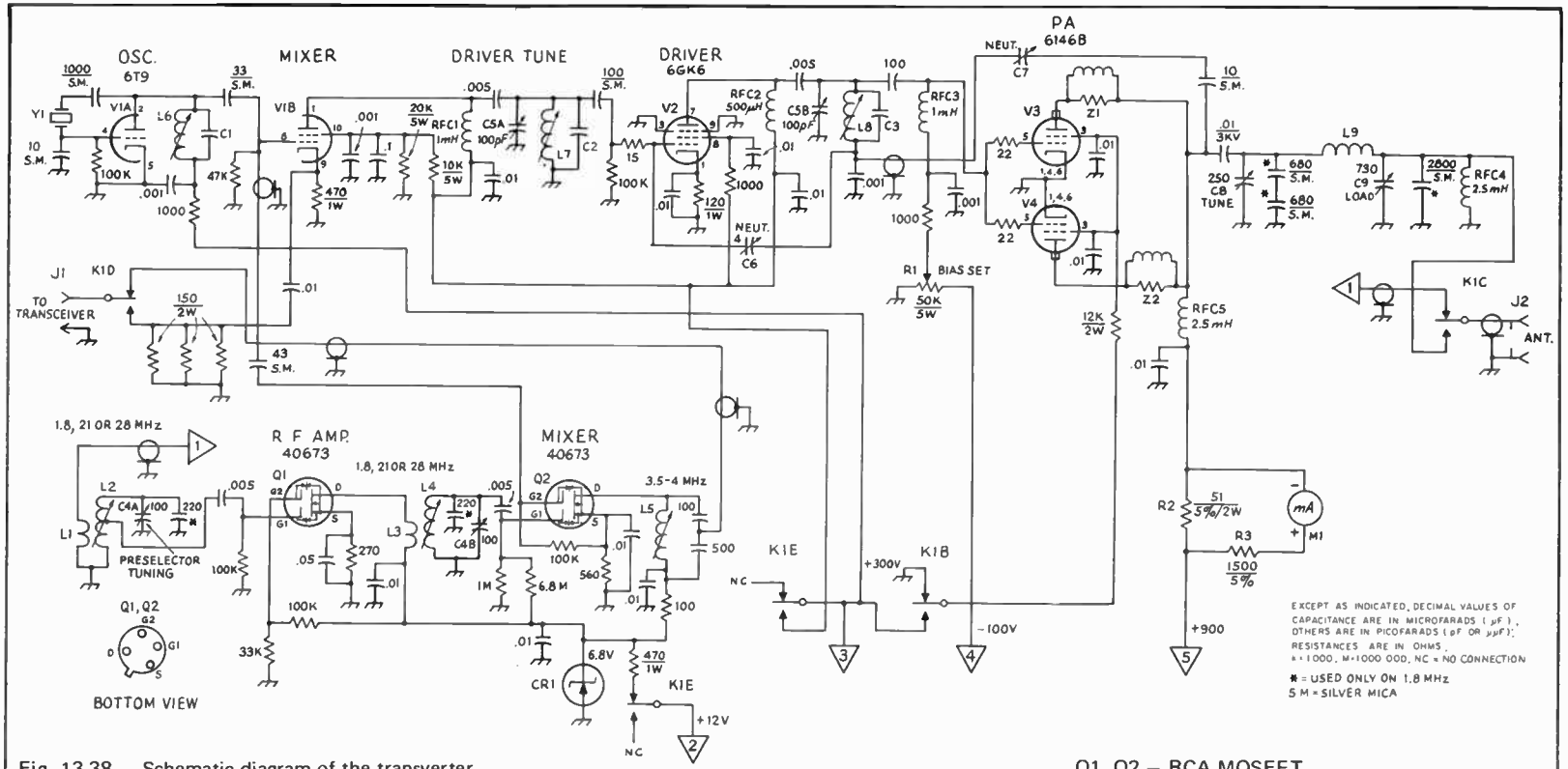

Fig. 13-38 — Schematic diagram of the transverter. Resistors are 1/2-watt composition and capacitors are disk ceramic, unless otherwise noted.

C1-C3, incl. — See table.
C4, C5 — Dual-section air variable, 100 pF per section.
C6 — Pc-mount air variable (Johnson 189-501-5).
C7 — Air variable (Johnson 160-102 or equiv.).
C8 — Air variable (Hammarlund MC-250-M).
C9 — Dual-section broadcast variable, 365 pF per section, both sections connected in parallel.
CR1 — Zener, 6.8 V, 1 W, 1N4736.
J1 — Phono type, chassis mount.
J2 — Coaxial receptacle, chassis mount.
K1 — See Fig. 13-40.
L1-L4, incl. — See table.
L5 — 16-26-μH slug-tuned coil (Miller 21A225RBI).
L6-L9, incl. — See table.
M1 — Milliammeter, panel mount (Simpson 06350 or similar).
Q1, Q2 — RCA MOSFET.
R1 — Linear-taper 5-W wire-wound control.
R2, R3 — 5-percent-tolerance composition.
RFC1, RFC3 — Miniature rf choke (Miller 73F103AF).
RFC2 — Miniature rf choke (Millen 34300).
RFC4 — 200-mA rf choke (Miller 4530).
RFC5 — Plate rf choke (Johnson 102-752).
Y1 — See table.
Z1, Z2 — 2 turns, No. 18 enam. wound over 47-ohm, 2-watt composition resistor.

Table 13-1
Tuned-Circuit Data

	L1	*L2/L4*	*L3*	*L6*	*L7/L8*	*L9*
1.8 MHz	11 turns No. 28 enam.	18-41 μH c.t. Miller 42A335CBI	22 turns No. 28 enam.	5-8.1 μH Miller 21A686RBI	18-41 μH Miller 42A335CBI	16 μH 30 turns B&W 3022
21 MHz	3 turns No. 28 enam.	1.5-1.9 μH c.t. Miller 42A156CBI	2 turns No. 22 enam.	1-1.9 μH Miller 21A156CBI	1.5-1.9 μH Miller 42A156CBI	.9 μH 4 turns B&W 3025
28 MHz	3 turns No. 28 enam.	1.5-1.9 μH c.t. Miller 42A156CBI	2 turns No. 22 enam.	1-1.9 μH Miller 21A156RBI	1.5-1.9 μH Miller 42A156CBI (6 t. removed)	.72 μH 4 turns B&W 3025
	C1	*C2*	*C3*	*Y1*		
1.8 MHz	150 pF	220 pF	220 pF	5.800 MHz		
21 MHz	43 pF	18 pF	18 pF	17.500 MHz		
28 MHz	5 pF	18 pF	5 pF	32.500 MHz		

output is obtained when the windings are connected, merely reverse the leads of one winding. The 11.3-volt ac is rectified by CR6 and filtered by an *RC* pi section.

Bias voltage is obtained for V3 and V4 by connecting a 6.3-volt filament transformer in back-to-back fashion with the 6.3-volt winding of T1. The 125-volt ac output from T2 is rectified, filtered, and then routed to the bias-adjust control, R1, to establish a PA resting plate current of 50 mA.

The metering circuit indicates plate current by measuring the voltage drop across a 51-ohm, 5-percent resistor connected in series with the plus-B lead to the final plate circuit. The 1500-ohm, 5-percent multiplier resistor, R3, produces a 450-mA full-scale reading on M1, using a basic meter movement of 0 to 15 mA. Other meters may be employed with suitable changes of R2 and R3, as described in the Measurements chapter of *The Radio Amateur's Handbook*.

Construction

An aluminum chassis which measures

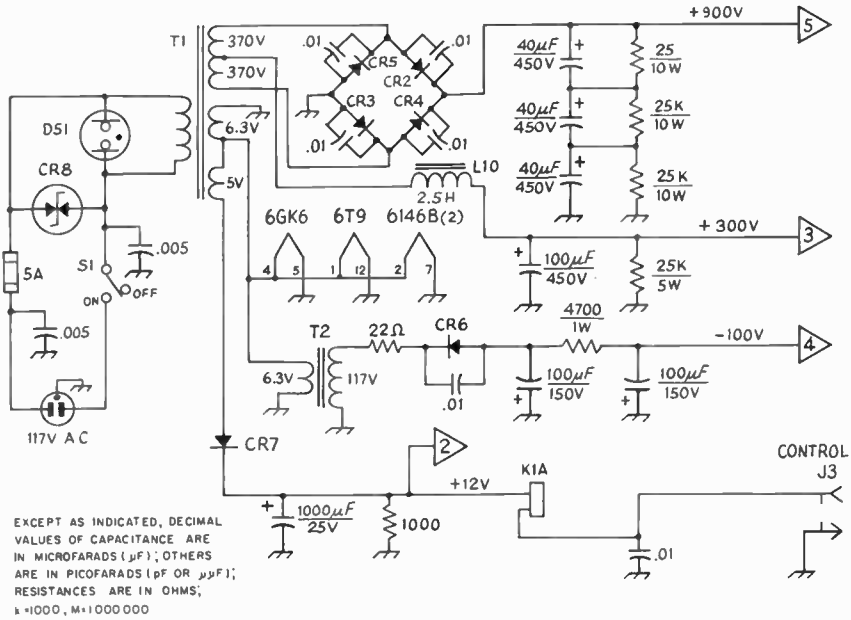

Fig. 13-40 — Diagram of the power-supply section. Resistors are 1/2-watt composition. Capacitors are disk ceramic, except those with polarity marked, which are electrolytic.
CR2-CR5, incl. — Silicon, 1000 PRV, 1 A.
CR6, CR7 — Silicon, 400 PRV, 1 A.
CR8 — Transient suppressor (GE 6RS20SP4B4).
J3 — Phono type, chassis mount.
K1 — 6 pdt relay, 2-A contacts, 12-V dc coil (Potter and Brumfield MTP23D11 or similar).
L10 — Power choke, 130 mA (Allied 6X24HF or equiv.).
S1 — Spst toggle.
T1 — Power transformer, 117-V primary; secondary windings 740 V ct at 275 mA, 6.3 V at 7 A, and 5 V at 3 A (Stancor P-6315 or equiv.).
T2 — Filament transformer, 117-V primary; 6.3-V, 1-A secondary.

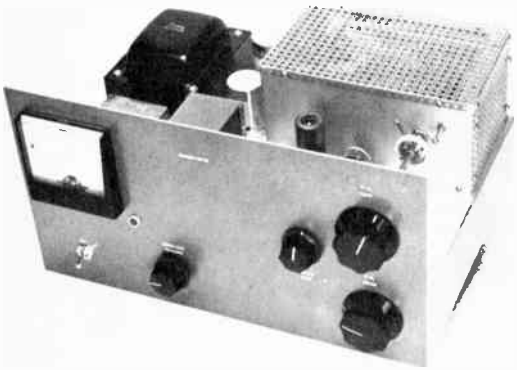

The transverter is shown here removed from its case. The smaller knob at the lower center of the panel controls the receiver preselector. Controls to the left are DRIVER TUNE (small knob), PA TUNE and PA LOAD.

10 X 14 X 3 inches is used as the base for the transceiver. A homemade panel and cabinet enclose the unit. The panel is 7 5/8 inches high and 14 inches wide. The layout employed should be apparent from the accompanying photographs. All long runs of rf wiring should be made with subminiature coaxial cable (RG-174/U or similar).

The converter is constructed on an etched circuit board, which is housed in a 4 X 2 1/4 X 2 1/4-inch Minibox. Short leads are run from the circuit board to the PRESELECTOR capacitor which is located on the underside of the chassis. The final amplifier is housed in a 7 X 5 X 3 1/2-inch enclosure. The particular capacitor used for C8 can be rotated so far that the rotator plates will short to the stator mounting rod. To prevent an accidental short, the travel of the capacitor shaft is limited by a long bolt extending from the PA cage, which prevents the long bolt protruding from the shaft coupling from moving by. See the front-view photograph.

Tune Up

Provision must be made to reduce the power output of most 75-meter transceivers that might be used with the transverter, as only about 5-watts drive is required. Too much rf can damage V1B and will "smoke" the input loading resistors. Approximately 30 volts of rf will appear between the transmitting-mixer cathode and ground when the correct level of 3.8-MHz energy is applied. Some transceivers are capable of supplying sufficient drive by removing the screen voltage from the PA stage. Or, it may be practical to disable the PA and obtain a sample of driver output by means of link coupling.

Before testing the transverter, assure that the changeover relay, K1, is connected to the remote-keying terminals of the 75-meter equipment. Then connect an antenna to J2 and listen for signals. Peak the incoming signals with the PRESELECTOR control. The slugs of L2 and L4 should be adjusted for the highest S-meter reading on the 75-meter transceiver. L5 should be set for maximum output at 3.7 MHz. If the receiving converter is functioning properly, it will be possible to copy a 0.1-μV cw signal or a 0.3-μV ssb signal without difficulty in areas where atmospheric and man-made noise is at a minimum. If no signals can be heard, check V1A to make certain that it is working properly. A wavemeter or general-coverage receiver can be employed to see if the crystal oscillator is operating.

Attach a 50-ohm dummy load to J2 before testing the transmitter section. Set R1 for an indicated resting plate current of 50 mA on M1. This adjustment should be made without drive applied but with K1 energized. Next, apply about 2 watts of 3.8-MHz cw drive at J1. Then, tune L6, L7 and L8 for maximum meter reading. L6 should be detuned slightly after peaking to insure that the oscillator will start each time that power is applied. While monitoring the plate current, tune C8 for a dip. C9 is the PA LOADING control, and it should be adjusted so that the dip in plate current is rather broad, an indication of tight coupling. When the PA capacitors are properly adjusted the plate current will be about 220 mA.

If the driver and final stages are stable, the

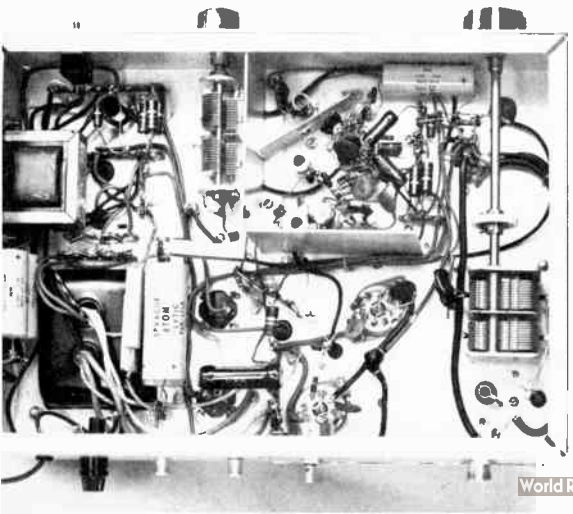

Looking into the bottom of the chassis, the sockets for the 6146B tubes are at the lower right. A shield isolates the oscillator and driver stages. The power-supply components are located along the left-hand wall.

changes in plate current will be smooth. If a number of dips or peaks occur, one or more stages are probably self-oscillating, and neutralization will be required. Adjustment of the driver stage should be accomplished first. With the plate and screen voltages removed from V2, V3 and V4 and with a wavemeter coupled to L8, adjust C5 for maximum indicated rf. C4 should then be set for a minimum reading on the wavemeter. Reconnect the plate and screen voltage to the 6GK6 and place the wavemeter near L9. Repeat the neutralization process, peaking C8 for maximum reading and then C7 for minimum. When all of the steps listed above have been completed, reconnect the 6146 plate- and screen-voltage leads.

Cw operation is accomplished by keying the associated transmitter or transverter. To tune up, insert sufficient carrier to bring the plate current up to about 220 mA. Dip and load the final in the usual manner. For ssb operation, the output of the transverter should be monitored on an oscilloscope to determine the correct level of drive. The final should not be driven to flat topping, even on voice peaks.

A 50-WATT PEP OUTPUT TRANSCEIVER FOR 75

This easy-to-build ssb transceiver uses low-cost components, many of which should be available in the builder's junk box. Although some of the circuitry is a bit unorthodox, on-the-air testing of several units that used the circuit of Fig. 13-43[1] indicated that the design is thoroughly practical. Commonly available tube types are used, and a simple sideband filter using surplus crystals provides good suppression in the transmit mode, and a fairly narrow pass-band for reception. Only four crystals are needed in all.

Circuit Principles

The complete wiring diagram of the transmitter (save for the heater wiring shown in Fig. 13-44) appears in Fig. 13-43. Several features were taken from a *QST* article[2], so any similarity is *not* coincidental. When receiving, the incoming 4-MHz signal is amplified in the 6AU6 rf stage, and then combined in the 6BE6 receiver mixer with a 3545-kHz signal from the VFO to produce a signal at 455 kHz in the output of the mixer. This signal is fed through the selective crystal filter (Y2-Y3) to a single i-f stage using another 6AU6A. The amplified 455-kHz signal is coupled into the 1N34A diode detector where it is combined with the signal from the 455-kHz crystal-controlled 6C4 BFO to produce audio output. The audio signal is amplified in the triode section of the 6EB8, and brought up to speaker level in the pentode section of the same tube. The rf gain control, R3, which is applied to the rf and i-f stages, provides smooth control of audio output, so a separate audio gain control was not deemed necessary.

When transmitting, the crystal-controlled BFO serves as the carrier generator at 455 kHz. The oscillator signal is fed to a balanced modulator using a 12AT7. When the output circuit is adjusted for balance by potentiometer R2, the carrier is suppressed. The application of audio from the speech amplifier results in a double-sideband suppressed-carrier signal at 455 kHz which is fed to a crystal filter consisting of T5, Y4, T2, Y2 and Y3. (The 6BE6 receiver mixer is not active on transmit.) The filter attenuates the upper sideband to the transmitter mixer, a 6CS6. Here it is combined with the 3545-kHz signal from the VFO to produce mixer output at 4 MHz – the same frequency as the receiving section. The 4-MHz lsb signal is amplified in the 12BY7A stage which drives the 6146 final amplifier. A pi-section output circuit provides a match to a low-impedance load.

Control Circuit

Reviewing the foregoing, it will be seen that three stages are common to the receiving and transmitting sections. These are the VFO, the BFO/carrier oscillator, and the i-f amplifier with its crystal filter. Other stages are switched in and out, as necessary, by the four-pole double-throw relay, K1, which also switches the antenna. On receive, 250 volts are applied to the rf amplifier, rf gain by 20 to 30 dB. The remaining lower-sideband signal is amplified in the i-f stage, and passed along

Fig. 13-41 – This model was constructed by W5RQJ. The dial is homemade, but may be replaced by a conventional type. At the left-hand end of the panel are the loading and tuning controls of the pi-network output circuit; at the right-hand end are controls for receiver and transmitter audio. Along the bottom, from left to right, are receiver rf trimmer, mobile power relay switch, buffer tuning control, and modulator balance control.

[1] This unit originally described in *QST*, June 1967, page 29.

[2] Taylor, "A 75-Meter SSB Transceiver," *QST*, April 1961.

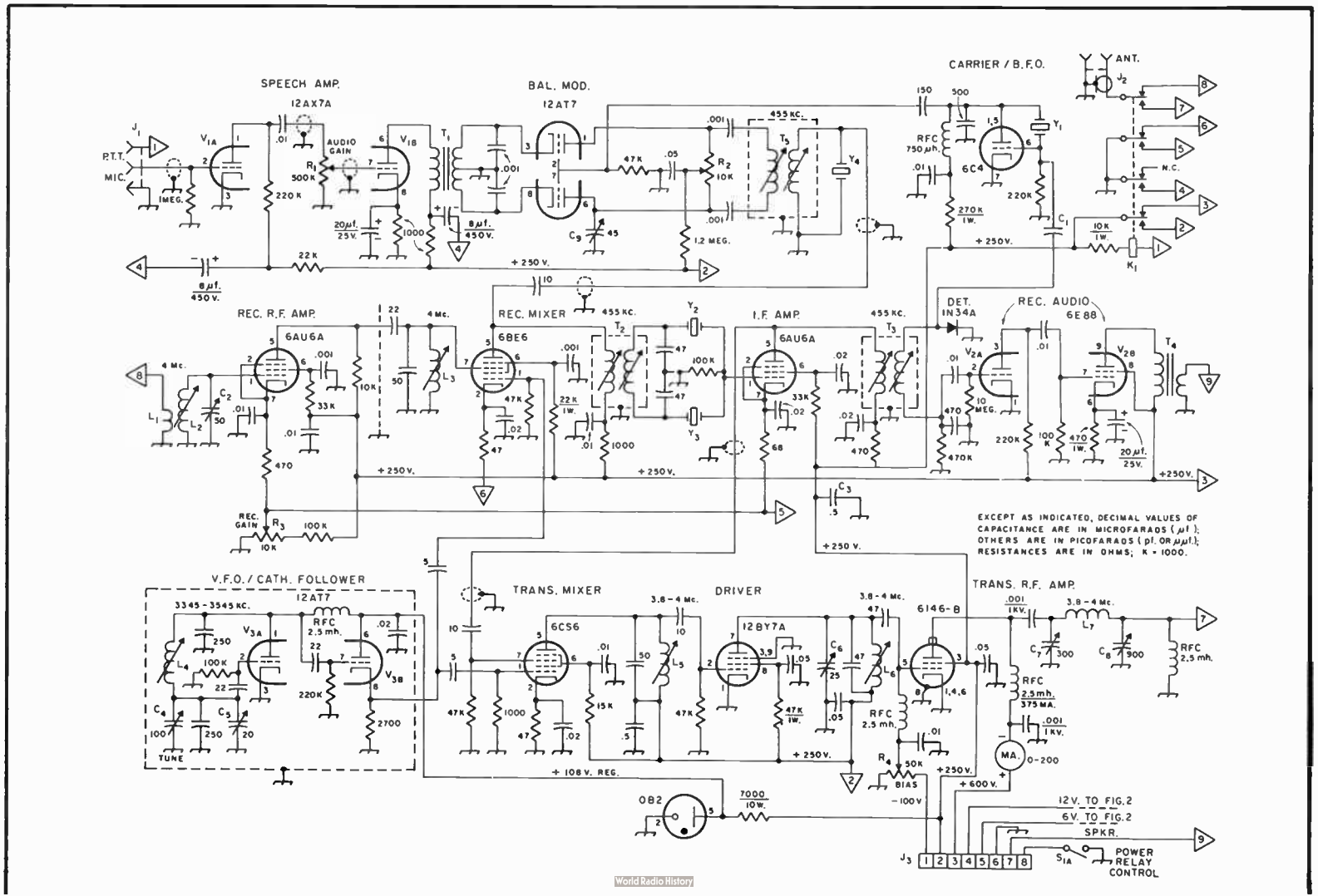

Fig. 13-43 — Circuit of the 75-meter transceiver. Fixed capacitors of decimal value, unless listed below or indicated otherwise in the diagram, are disk ceramic and are 500 volt. Others are silver mica or NPO ceramic, 500-volt, except where polarity indicates electrolytic. Unless indicated otherwise, resistors are 1/2-watt.

C1 — "Gimmick" capacitor made by twisting two short lengths of insulated wire together.
C2 — Air trimmer (Hammarlund APC-50-B).
C3 — Mylar capacitor.
C4 — Midget air variable (Johnson 167-11, or similar).
C5 — Miniature air trimmer (Johnson 160-110).
C6 — Air trimmer (Hammarlund APC-26B, or similar).
C7 — Air variable (Millen 19325, or similar; see text).
C8 — Three-section broadcast-band variable capacitor, sections in parallel.
C9 — 7-45-pF ceramic trimmer.
J1 — Three-circuit microphone connector.
J2 — Chassis-mounting coaxial receptacle.
J3 — 8-contact chassis-mounting male connector (Cinch-Jones).
K1 — Four-pole double-throw relay, 117 volts, dc (Potter & Brumfield KL17D, or similar).
L1 — 10 turns No. 30 enameled, wound over ground end of L2.
L2, L3, L5, L6 — 35 turns No. 30 enameled, wound on 3/8-inch ceramic iron-slug form.
L4 — 28 turns No. 26 enameled on 3/8-inch ceramic iron-slug form, wound tightly and doped.
L7 — 24 turns No. 22 enameled on 7/8-inch ceramic form (surplus form).
R1 — Audio-taper control.
R2, R3, R4 — Linear control.
S1 — Dpst rotary switch (see Fig. 2 for second section).
T1 — Interstage audio transformer, single plate to pp grids (Stancor A-63-C).
T2, T5 — Miniature 455-kHz i-f input transformer (Miller 12-C1).
T3 — Miniature 455-kHz i-f output transformer (Miller 12-C2).
T4 — Audio output transformer, 5000 ohms to voice coil.
Y1, Y2, Y4 - 455-kHz crystal (see text).
Y3 — 453.148-kHz crystal (see text).

control, receiving mixer, detector, and receiving audio. (The mixer is switched in the cathode circuit by a separate relay pole to avoid diode mixing in the receiver mixer while transmitting.) In addition, another pole of the relay disconnects the two 8-μF bypass capacitors in the speech amplifier. This was found to be necessary to avoid audio oscillation in the speech amplifier which occurred as the capacitor discharged after removal of voltage from the amplifier when switching from transmit back to receive.

When transmitting, voltage is removed from the stages mentioned above, and applied to the balanced modulator, the speech amplifier, transmitter mixer, and driver stage. The cathode resistor of the i-f amplifier is switched to ground to remove it from the influence of the rf gain control and place it at full gain on transmit. (This switching also grounds the cathode resistor of the rf stage, of course, but since plate voltage has been removed from this stage, complications that might arise from this source are avoided.) Power to the final is not switched.

One side of the relay coil is connected to the 250-volt line through a 10,000-ohm series resistor. The coil circuit is completed to ground through the PTT switch at the microphone.

The VFO

A variation of the Vackar circuit, first noted in *QST* several years ago, is used in this important part of the transceiver. This circuit is easily adjusted, and provides constant output and adequate drive through very small coupling

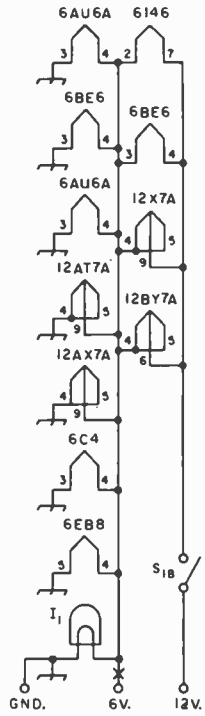

Fig. 13-44 — Heater wiring diagram for either 6- or 12-volt operation. I1 is a No. 47 6.3-volt 0.15-ampere pilot bulb. For 12-volt operation, the 12-volt terminal should be connected to pin 4 of the plug for J3, Fig. 13-43, Gnd. to pin 6, no connection to the 8-volt terminal. For 6-volt operation, S1B should be transferred to the 6-volt line at X, the 6-volt terminal should be connected to pin 5, the 12-volt terminal and Gnd. to pin 6.

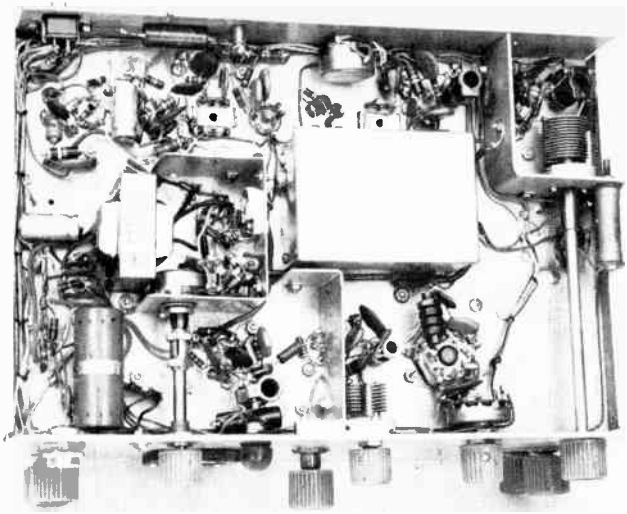

Fig. 13-42 — Grouped at left center are T1, R2 and C9, the latter two mounted on a shielding bracket. L5 is below the bracket. To the right is the box shielding the coil and other components of the VFO/cathode follower. Below the box are L6 and driver tuning capacitor, C6. L1/L2 and C2 are in the shielding compartment in the upper right-hand corner, and L3 is to the immediate left.

capacitances, with a plate voltage of only 108 volts. This voltage is regulated by an 0B2 fed from the 250-volt supply through a 7000-ohm resistor. One section of a 12AT7 (V3A) is used in the oscillator, while the other section (V3B) is in a cathode follower driven by the oscillator. The latter serves to isolate the VFO from the two mixers which it feeds. With this configuration, frequency shift is a matter of only a few cycles, comparing very favorably in this respect to commercial gear. No VFO temperature compensation is included; drift is nominal after a thorough warm-up.

Crystals

Surplus crystals in the 455-kHz range are used. The low-numbered FT-241 crystals, from Channel 38 to about Channel 75, are in a range that can be tuned to with ordinary 3/4-inch 455-kHz i-f transformers. Two Channel 45 crystals (Y2 and Y4), and one Channel 44 crystal (Y3) are used in the filter. These crystals are fairly close to 455 kHz and Y3 differs from the other two by about 1852 Hertz. Using a Channel 45 crystal at Y1 in the BFO/carrier oscillator, and tuning as described presently, lower-sideband output will be produced. For those unable to obtain the surplus crystals,

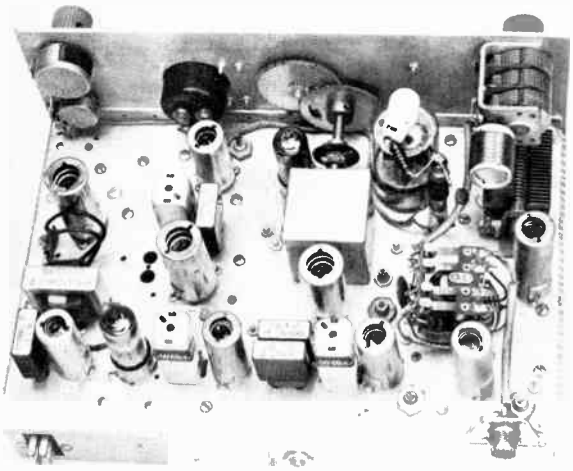

Fig. 13-45 — Lined up along the rear edge of the chassis, from right to left, are the 6AU6 receiver rf-amplifier tube, 6BE6 receiver mixer tube, T2, Y2 and Y3, the 6AU6A i-f tube, T3, the 6EB8 receiving-audio tube, 6C4 carrier/BFO, and Y1. L1,L2 are to the right of output connector, and L3 to the left. The 12AT7 VFO tube is immediately to the rear of the box shielding the VFO tuning capacitor, C4. The adjusting screw of L4 and the screwdriver shaft of trimmer C5 are discernible to the right of the 12AT7. The tube above and to the left of the box is the 12BY7A driver. L6 is mounted between the box and the panel, and cannot be seen. Grouped at the upper left are the 12AX7 transmitting audio tube (above T4), the 6CS6 transmitting mixer (below the meter), T5 and Y4, and the 12AT7 balanced-modulator tube. L5 is to the right of the meter. At the upper right are the 6146 and components of the pi network. L7 is mounted on the output capacitor C8. The tube to the right of the changeover relay is the 0B2 regulator. On the rear apron are the power connector, J3, and the shaft of the bias control, R4.

Texas Crystals, Fort Myers, Florida, or JAN Crystals, also in Fort Myers, advertises crystals in the 455-kHz range, 25-Hertz tolerance, in FT-241 holders. Three crystals of the same frequency are needed – two for the filter and one for the BFO. The additional crystal for the filter should be approximately 1800 to 2000 Hertz lower in frequency.

Construction and Adjustment

An 8 X 12 X 2-inch chassis provides enough space to avoid crowding of components if the layout shown in the photos is followed reasonably closely. A panel 5 1/2 inches high will provide clearance for the 6146 without submounting the socket. The dial is homemade. The gearing was salvaged from old Command-set mechanisms. However, a National 5-to-1 ratio planetary-drive dial, or any similar conventional dial, may be used.

Careful orientation of the tube sockets will furnish convenient tie points for resistors and bypass capacitors and hold wiring between stages to a minimum. Low-potential wiring can be run around the edges of the chassis in bends and corners for neater appearance. As indicated in the diagram, shielded wire should be used for the connections to the microphone jack and gain control in the speech amplifier, for the balanced-modulator output connection, and in the coupling line between the i-f amplifier and the transmitter mixer. Shielded wire is also preferable for heater circuits and other low-potential wiring.

The transceiver can be built a stage or section at a time, testing each as it is completed. It is suggested that the VFO be constructed first, using short leads. The tuning capacitor, C4, is placed above the chassis in a shielding box, with a connecting wire running through a small hole to the coil, which is enclosed in a second shielding box on the underside of the chassis. Coil turns may have to be pruned, and capacitance juggled, to achieve the proper 200-kHz tuning range for the VFO. Assuming that the carrier-oscillator crystal is for Channel 45 (about 455 kHz), the upper limit of the VFO range would be 3545 kHz to tune the transceiver to 4000 kHz. The lower end of the range would be 3345 kHz, to tune the transceiver to 3800 kHz. Keeping the VFO frequency on the lower side of the incoming signal seems to result in less drift than when the VFO is tuned to the upper side. Listening on a receiver while adjusting the VFO will assist the builder in getting the circuit into the proper tuning range.

After the VFO is working, the receiver section can be constructed. To align the i-f amplifier stage, couple output from a modulated signal generator to the receiver mixer stage with all four crystals in place. Tune the signal generator exactly to the frequency of the BFO crystal. Remove this crystal, and peak i-f transformers T2 and T3 for maximum audio output. Replace the BFO crystal. Final alignment of the crystal-filter and i-f stage can be done after construction of the transmitter stages.

Now peak the receiver mixer coil, L3, at 3900 kHz. (A grid-dip oscillator will be helpful in rough tuning of circuits in the transmitter as well as in the receiver section.) The rf stage is rough-tuned by the slug of L1L2, and the circuit is peaked by the 50-pF trimmer, C2, which should be mounted on the panel.

After the receiving section is working, the transmitter section should be checked out. Peak the transmitter mixer coil, L5, at 3900 kHz. In operation, the output of the mixer will fall off some at either end of the band, but should still be adequate for full drive to the final. Peak L6 at 3900 kHz with C6 set at mid capacitance. It will be noticed that part of the tuning capacitance in this stage is fixed to confine the tuning range to the vicinity of 4 MHz, thus avoiding the possibility of tuning to some other response in the output of the mixer. Those more mechanically able could gang-tune the mixer and driver stages by adding a small variable capacitor across the mixer coil, and coupling its shaft to that of the driver tuning capacitor, C6, to obtain full output across the band.

No special constructional precautions are necessary in the driver and final stages, except that a shield should be placed across the 12BY7A socket. Pins 3 and 9 of this tube are grounded, and the shield can be placed across these two pins when the socket is properly oriented on the chassis. The relay should be mounted on the chassis reasonably close to the pi-network components, since one pole of the relay switches the antenna.

The biasing control, R4, should be set for a final-amplifier idling current of 25 to 30 mA.

If the transceiver has been constructed in sections, as suggested, proper alignment of the filter system, consisting of the three filter crystals and three i-f transformers, can now best be done by feeding a sine-wave audio signal at low level, 1000 to 2000 hertz, into the microphone input, and observing the output wave form on a scope. A little *careful* twisting on the i-f transformer slugs will produce the proper pattern on the scope, indicating when the pass band of the filter is adjusted for maximum suppression of the unwanted sideband, and the carrier. Additional information on filter alignment will be found in *Single Sideband for the Radio Amateur.*

In actual operation, transmitter adjustment is very simple. Press the push-to-talk switch. Set the VFO to frequency, turn the carrier-balance control to one side, tune the final for maximum output, then adjust R2 and C9 for minimum final-amplifier idling current. If C9 has no effect when connected to one plate of the 12AT7, it should be transferred to the other plate. That's all there is to it.

A field-strength meter can be used when tuning the final, but the plate-current dip is a fairly satisfactory indicator. During adjustment with the scope, the proper setting of the gain control to prevent overdrive and splatter should be determined.

Power Supply

For home-station operation, a power supply delivering 600 volts at 150 mA, 250 volts at 75 mA, and 100 volts of bias can be used. The Heath HP-10 supply can be used for mobile work. The heater wiring diagram of Fig. 13-44 provides for either 6- or 12-volt operation.

A 20-METER SIDEBAND TRANSMITTER

The ssb transmitter uses a minimum number of panel controls. Push-button switches activate the power supply and the output-metering function. A J. W. Miller MD-4 dial, LMB CO-1 cabinet and Simpson Wide-Vue meter lend a modern appearance to the unit.

Very few of the amateurs operating ssb today belong to that exclusive club comprised of those who have homemade transmitters. Yet, a custom-designed rig that is tailored to an individual's operating requirements can be such a pleasure to use. Solid-state components and circuit-board assembly techniques have simplified the construction task to the point where any amateur with kit-building experience can successfully complete an ssb rig . . . and join the club.

Circuit Details

The transmitter circuit shown in Fig. 1 is designed for the 14-MHz band and for use with a vhf transmitting converter or transverter. All stages employ solid-state devices, except for the driver and final amplifier, which use tubes. Power output is approximately 50 watts PEP. If the tuned circuits from the mixer onward are modified to resonate at 3.8 to 4 MHz, the transmitter may be used on the 75-meter band without any other changes. The sideband generator is constructed on a single etched-circuit board. The generator may be used as the basis of a transmitter design for other amateur bands, if desired.

The 14-MHz transmitter consists of three sections: a VFO, an ssb generator and a power amplifier. The generator was developed from a circuit published in *QST*[1]. Carrier energy at 9 MHz is produced by Q6. Diode switching is employed to select a suitable crystal for upper or lower sideband. The balanced modulator uses a MC1496G integrated circuit which provides up to 50 dB of carrier suppression. For tune-up purposes, a positive voltage applied to pin 1 of the 1496 provides full carrier output.

The audio-input signal is amplified by a JFET, Q1. The high input impedance of this device allows a dynamic, ceramic, or crystal microphone to be used. A Motorola MFC6040 functional circuit provides audio gain control by means of a dc voltage, eliminating the need for long leads carrying low-level audio to a panel-mounted control. The resistive loading of the balanced-modulator input terminals must be kept below 200 ohms if good carrier suppression is to be achieved. Thus, some power is required from the audio section. A 2N2102 transistor provides the required 0.5-volt rms audio signal across R21.

The output from the balanced modulator is fed directly to the 9-MHz crystal filter, FL1. (Several different firms manufacture filters suitable for use in this transmitter; five models are listed in Fig. 1.) After the unwanted sideband has been removed by the crystal filter, the level of the ssb signal is increased by a 40481 MOSFET voltage amplifier. This stage makes up for losses in the filter and provides a convenient alc control point.

A second 40481 transistor, Q8, functions as a mixer, combining the 9-MHz ssb signal with 5-MHz energy from the VFO to provide output on 14 MHz (or 3.5 MHz if a suitable value is chosen for L9). A buffer stage, using a 2N2102 power transistor, provides additional amplification and a 50-ohm output impedance for the ssb generator. A short length of RG-174A/U subminiature coaxial cable carries the ssb signal to the input of the driver tube, V1.

The VFO uses a dual-gate MOSFET, Q3, with both gates tied together. A J. W. Miller low-friction-drive variable capacitor allows frequency variation between 4.95 and 5.55 MHz. Two low-gain bipolar transistors isolate the variable-frequency oscillator from the mixer. A low-pass filter is included at the output of the second buffer to suppress harmonic energy generated by the VFO. Frequency stability of the VFO is excellent. Drift is less than 10 Hz over any 15-minute period, after a 10-minute warm-up.

Power amplification is accomplished by two tubes, a 6GK6 and a 6146B. Input to the final stage measures approximately 90 watts PEP. A pi-section output network is employed to match 52- or 75-ohm loads. An all-solid-state circuit can be built for this power level. However, the cost of suitable transistors is so high that the hybrid

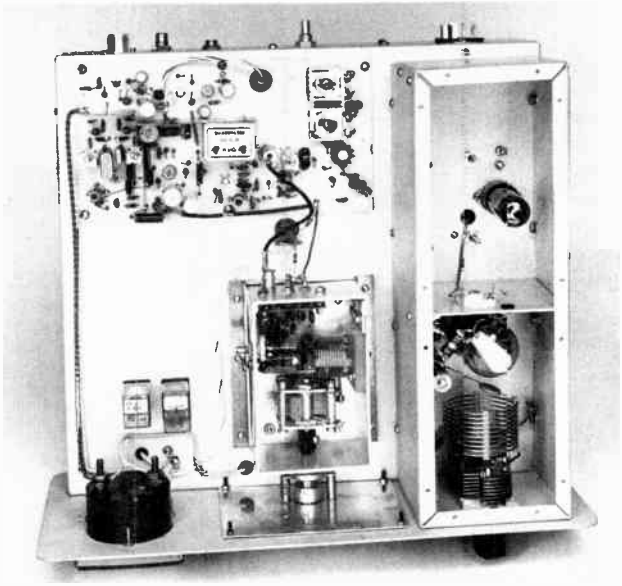

The interior view reveals the shielded compartments used for the driver and final stages. At the center is the VFO. The small air-variable capacitor mounted within the VFO enclosure is the calibration adjustment. The ssb generator is constructed on an etched circuit board which is mounted over a 3-7/8 × 7-1/2-inch cut out in the chassis. A shield was tried between the sections of the ssb generator, but little additional carrier suppression was achieved.

approach is best for cost-conscious amateurs, at least for a while longer.

Relay switching is included to perform the PTT function and to disable the final-amplifier tube when an external transmitting converter is used. Push-button switches control a remote power supply, using a control circuit similar to that described in *QST*.[2] The supply is patterned after the "economy" design given in recent editions of *The Radio Amateur's Handbook*, to which a 12-V, 1-A regulated supply (design taken from *QST*[3]) has been added to power the solid-state devices in the transmitter.

Construction

The transmitter is built in a 14 1/2 X 6 1/2 X 13 1/2-inch LMB CO-1 cabinet which provides sufficient left-over room for a built-in power supply or several accessories. The VFO is constructed in a 3 X 4 3/4 X2 1/4-inch box made from 3/16-inch-thick aluminum stock. Mechanical rigidity is vital to assure frequency stability. The coil used as part of the VFO tuned circuit is cut from B&W 3015 Miniductor stock and glued to a 1 1/2 X1 1/2-inch piece of Plexiglas, which is, in turn, bolted to the wall of the VFO enclosure. The VFO, buffer and output stages may be assembled using point-to-point wiring or using an etched circuit board. The output filter must be located within the VFO enclosure to assure that harmonic energy is "bottled up."

The ssb generator is constructed on a 4 1/4 X 8-inch etched circuit board. Suitable mounting holes are provided on the board for the five types of crystal filters specified in Fig. 1. Either the generator or the driver/final amplifier must be completely enclosed so that high-level 14-MHz rf does not leak back into the solid-state stages. The power amplifier section is the logical choice to be shielded, as it is the one that most often causes TVI problems. Both the 6GK6 and 6146B tubes must be neutralized to prevent self-oscillation.

Testing and Alignment

Remove V1 and V2 from their sockets during initial testing. Insure that the carrier oscillator and VFO are operating properly by monitoring their outputs by means of a general-coverage receiver. Place an rf probe (a length of coaxial line with a one-turn link on one end and the other end connected to a receiver) over L6. Tune in the dsb signal at 9 MHz, and adjust R18 and L4 for minimum carrier output. The level of carrier injection has a marked effect on the amount of suppression that can be obtained; some experimentation with the value of C50 may be necessary.

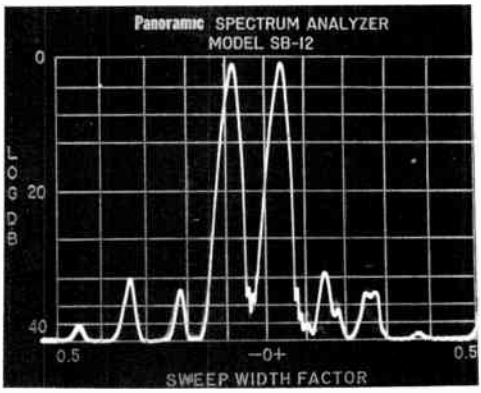

Spectral analysis of the transmitter output under two-tone test conditions. Distortion products are down 30 dB below a reference single-tone test.

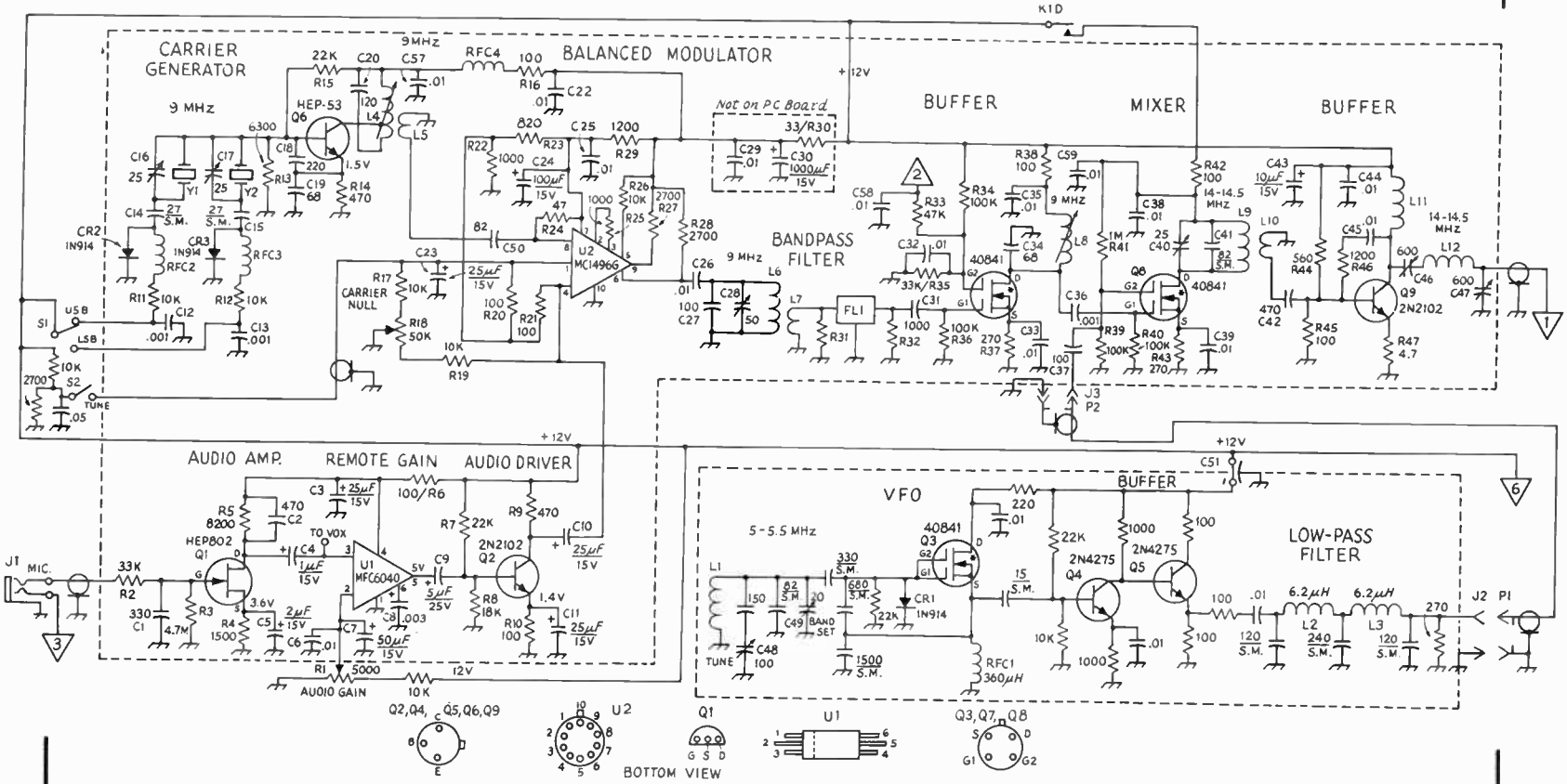

Fig. 1 — Schematic diagram of the ssb transmitter. Unless otherwise noted resistors are 1/4- or 1/2-watt composition. Capacitors are disk ceramic unless marked otherwise, except those with polarity indicated, which are electrolytic. Components not listed below are given designators for circuit-board location purposes. A circuit board for the ssb generator is available from Spectrum Research Labs, 3208 E. President Street, Phoenix, AZ 85714, price: $7.50. A circuit-board template is available from ARRL Hq. for $.50 and a large self-addressed stamped envelope. *(Continued on page 430)*

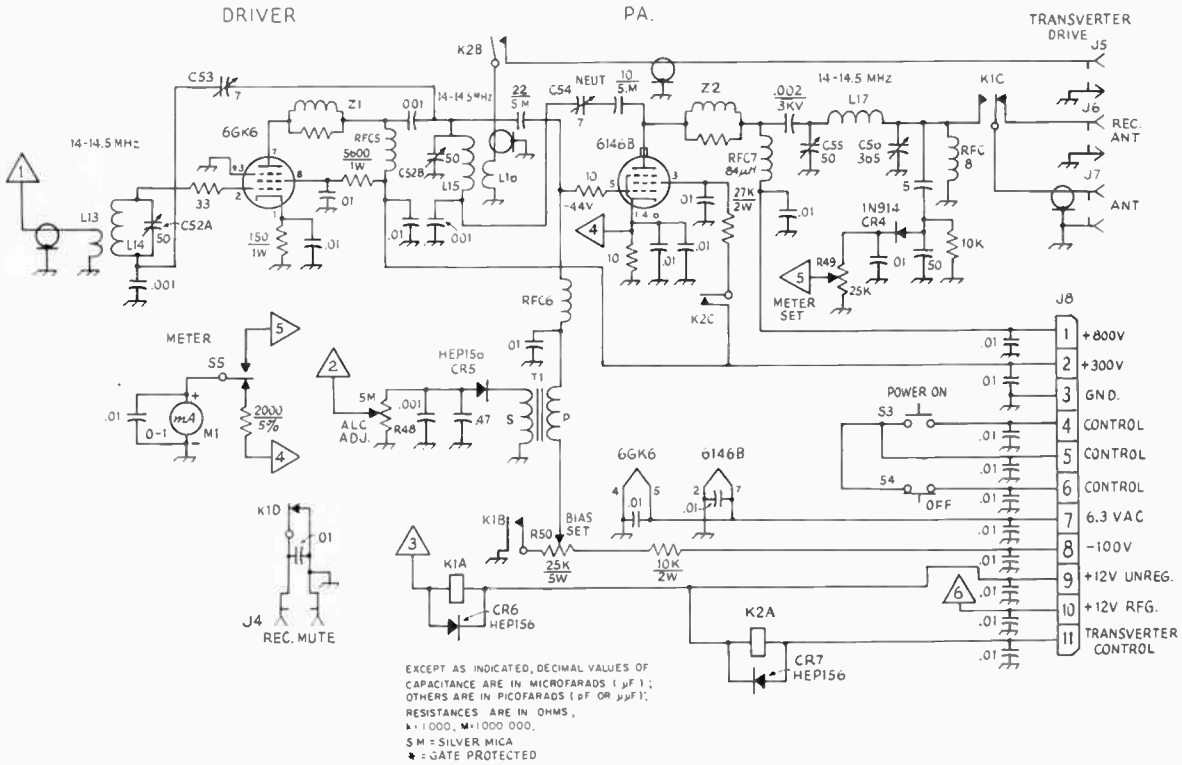

(Continued from page 429)

C16, C17, C40 — Air variable, pc mount (E. F. Johnson 189-0509-005).
C28 — Ceramic trimmer, pc mount (Centralab 825-GN).
C46, C47 — Mica-insulated trimmer (J. W. Miller 160-C).
C48 — Air variable (J. W. Miller 2101).
C49 — Air variable, panel mount (E. F. Johnson 160-0110-001).
C51 — Feedthrough type.
C52 — Dual-section air variable, 50 pF per section (Hammarlund HFD-50).
C53 — Miniature air variable (E. F. Johnson 189-0502-004).
C54 — Ceramic trimmer (Centralab 822EZ).
C55 — Air variable, panel mount (E. F. Johnson 167-3).
C56 — Air variable, broadcast type (J. W. Miller 2111).
CR1-CR4, incl. — High-speed silicon switching diode, 1N914 or similar.
CR5-CR7, incl. — Silicon diode, 100 PIV or more, 500 mA.
FL1 — Crystal filter, 9-MHz center frequency, 2- to 3-kHz bandwidth; KVG XF-9A or XF-9B, Wheatlands WF-4 or WF-8, or ESEL M9A suitable. (Wheatlands Electronics, P. O. Box 343, Arkansas City, KS 67005; ESEL, P. O. Box 434, Excelsior Springs, MO 64024; Spectrum International, Box 87, Topsfield, MA 01983)
J1-J6, incl. — Phono type, panel mount.
J7 — Coaxial connector, panel mount.
J8 — 12-circuit power connector, panel mount.
K1 — Miniature relay, 4 pdt 2-A contacts, 12-V dc coil (Potter and Brumfield R10-E1-Y4-V185 or equiv.).
K2 — Miniature relay, 2 pdt 2-A contacts, 12-V dc coil (Potter and Brumfield R10-E1-Y2-V185 or equiv.).
L1 — 12 turns No. 20 tinned wire, 16 tpi, 1-inch dia (B&W 3015 Miniductor).
L2, L3 — Solenoid-wound rf choke used as an inductor (J. W. Miller 70F686AI with 4 turns removed).
L4 — 2.9- to 3.6-μH slug-tuned inductor, pc mount (J. W. Miller 46A336CPC).
L5 — 2 turns No. 28 enam. wire over L4.
L6 — 20 turns No. 22 enam. on Amidon T-50-2 core (Amidon Associates, 12033 Otsego St., North Hollywood, CA 91607).
L7 — 9 turns No. 28 enam. over L6.
L8 — 4.2- to 5.2-μH slug-tuned inductor, pc mount (J. W. Miller 46A476CPC).
L9 — Approx. 1.2 μH, 14 turns No. 22 enam. wire on Amidon T-50-2 core.
L10 — 3 turns No. 22 enam. over L9.
L11 — 7 turns No. 22 enam. wire on Amidon T-37-2 core.
L12 — 8 turns No. 22 enam. wire on Amidon T-37-2 core.
L13, L16 — 2 turns No. 22 enam. over L14 and L15, respectively.
L14, L15 — 2.4- to 5.8-μH slug-tuned inductor (J. W. Miller 42A476CBI).
L17 — 10 turns No. 14 tinned wire, 8 tpi, 2-inch dia (B&W 3026 Miniductor).
M1 — Milliammeter, panel mount (Simpson 1222-15420).
P1, P2 — Phono type, cable mount.
Q1, Q4-Q6, incl. — Motorola transistor.
Q2, Q3, Q7-Q9, incl. — RCA transistor.
R1, R48-R50, incl. — Linear-taper composition, panel mount.
R18 — Linear-taper composition, pc mount.
R31, R32 — For KVG filters, 560 ohms; for Wheatlands WF-4 270 ohms, WF-8, 320 ohms; ESEL M9A, 220 ohms.
S1, S2 — Dpdt toggle.
S3 — Spst momentary push-button type (Switchcraft BX-01-6).
S4 — Spdt momentary push-button type (Switchcraft BX-03-3).
S5 — Dpdt momentary push-button type (Switchcraft BX-03-6).
T1 — Audio type, primary 600 ohms; secondary 2000 ohms (Triad T-35X or equiv.).
U1 — Motorola functional circuit.
U2 — 1496 IC (Motorola MC1496G or MC1596G, Signetics S5596K, or Fairchild μA796, or equiv.).
Y1 — 8.9985 MHz, or frequency specified by filter manufacturer.
Y2 — 9.0015 MHz, or frequency specified by filter manufacturer.
Z1 — 5 turns No. 22 enam. over a 33-ohm, 1/2-watt composition resistor.
Z2 — 5 turns No. 20 tinned wire over a 47-ohm, 1-watt composition resistor.

Connect a microphone to J1 and speak into it while listening to the output from the balanced modulator on the receiver (use headphones to prevent feedback). The signal should be clean and crisp. Switch S2 to TUNE, and check to see that full carrier output occurs.

Move the test link to L8 and tune the receiver across the 9-MHz dsb signal. The unwanted sideband should be suppressed 40 dB or more. Next, with the link around L9, monitor the 20-meter output with the receiver. Adjust L8 for maximum signal, as indicated by a peak S-meter reading. Move the link to L12 and peak C40, C46 and C47.

Plug in V1. Remove the screen voltage from the 6GK6 by unsolding the lead to pin 8. With the test probe placed near L15, adjust C52 for maximum indication on the receiver S meter and C53 for minimum. Reconnect the screen voltage to V1 and insert V2 in its socket. Repeat the neutralizing procedure for the 6146B monitoring the output signal at L17. Remove the screen voltage from pin 3 and set C54 for minimum feedthrough signal. Reinstall the screen-voltage lead, and connect an rf

C30 is held in place just above the sideband generator by one of the pc-board mounting bolts. To assure a good ground connection, a star lock washer should be used between the circuit board and the chassis when each of the mounting bolts is installed. Note that the leads from the power-supply jack are isolated from the final amplifier by a shield.

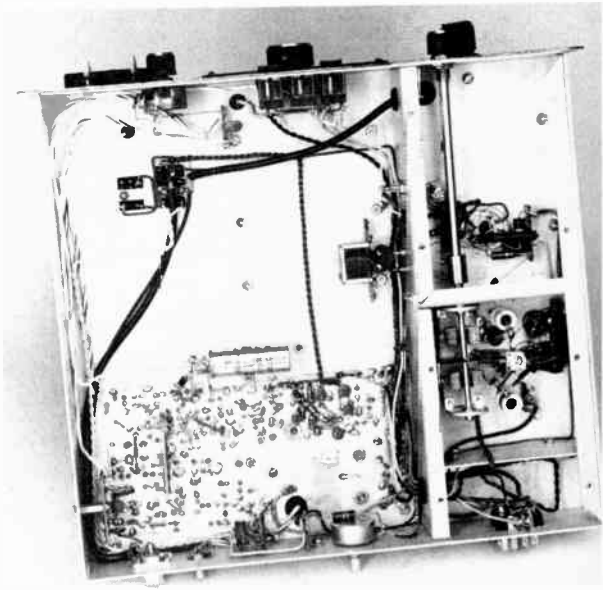

wattmeter in the line between J7 and a 50-ohm dummy load. With S2 set for TUNE, an output of at least 50 watts should be indicated on the power meter. Depress S5 and set R49 so that M1 reads nearly full scale.

Proper adjustment of the alc circuit can be accomplished only with the aid of an oscilloscope. While monitoring the rf output on the scope, inject a two-tone test signal, advancing R1 until the test pattern shows mild flattening of the waveform peaks. Then, adjust R48 until the peak distortion disappears.

The best final check of any ssb transmitter is to use an ssb receiver to monitor the output of the rig, while it is operated into a dummy load. Distortion, excessive bandwidth, noise, or popping are all indications of trouble that should be corrected before the transmitter is used on the air.

A VOX Accessory

If VOX operation is desired, the circuit shown in Fig. 2 may be included in the transmitter. This design is a modified version of the VOX unit described earlier in this chapter. Here, a single IC replaces four of the discrete transistors employed in the original circuit. The GAIN, ANTIVOX, and DELAY controls are mounted directly on a pc board. Q10, an MPS-A55 transistor, must be selected, for low leakage if the delay circuit is to function properly. Excessive leakage will cause the relay, K1, to remain closed, even though no input signal is applied.

[1] Blakeslee, "A Second Look at Linear Integrated Circuits," *QST*, July, 1971.
[2] Blakeslee, "Some Notes on the Design and Construction of Grounded-Grid Linear Amplifiers," *QST*, December, 1970.
[3] Blakeslee, "Ac-Operated Regulated DC Supplies for Transistorized Rigs," *QST*, November, 1971.

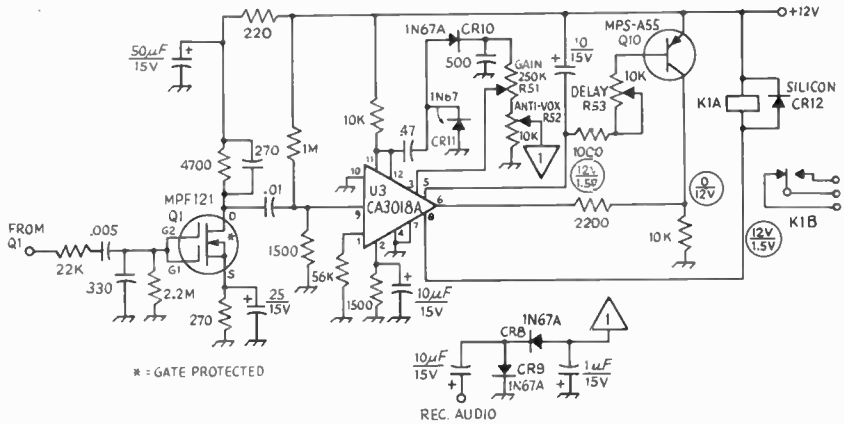

Fig. 2 — Diagram of the VOX. Unless otherwise noted, resistors are 1/4-watt composition and capacitors are disk ceramic, except those with polarity marked, which are electrolytic.

CR8-CR11, incl. — Germanium diode, 1N34A, 1N67A, or similar.
CR12 — Silicon diode, 100 PRV or more, 500 mA.
K1 — See Fig. 1.
Q10, Q11 — Motorola transistor.
R51-R53, incl. — Linear-taper composition, pc mount.
U3 — RCA integrated circuit.

Chapter 14

Frequency Modulation and Repeaters

Methods of radiotelphone communication by frequency modulation were developed in the 1930s by Major Edwin Armstrong in an attempt to reduce the problems of static and noise associated with receiving a-m broadcast transmissions. The primary advantage of fm, the ability to produce a high signal-to-noise ratio when receiving a signal of only moderate strength, has made fm the mode chosen for mobile communications services and quality broadcasting. The disadvantages, the wide bandwidth required and the poor results obtained when an fm signal is propagated via the ionosphere (because of phase distortion), has limited the use of frequency modulation to the 10-meter band and the vhf/uhf section of the spectrum.

Fm has some impressive advantages for vhf operation, especially when compared to a-m. With fm the modulation process takes place in a low-level stage. The modulation equipment required is the same, regardless of transmitter power. The signal may be frequency multiplied after modulation, and the PA stage can be operated Class C for best efficiency, as the "final" need not be linear.

In recent years there has been increasing use of fm by amateurs operating around 29.6 MHz in the 10-meter band. The vhf spectrum now in popular use includes 52 to 53 MHz, 146 to 147.5 MHz, and 440 to 450 MHz.

FREQUENCY AND PHASE MODULATION

It is possible to convey intelligence by modulating any property of a carrier, including its frequency and phase. When the frequency of the carrier is varied in accordance with the variations in a modulating signal, the result is frequency modulation (fm). Similarly, varying the phase of the carrier current is called phase modulation (pm).

Frequency and phase modulation are not independent, since the frequency cannot be varied without also varying the phase, and vice versa.

The effectiveness of fm and pm for communication purposes depends almost entirely on the receiving methods. If the receiver will respond to frequency and phase changes but is insensitive to amplitude changes, it will discriminate against most forms of noise, particularly impulse noise such as is set up by ignition systems and other sparking devices. Special methods of detection are required to accomplish this result.

Modulation methods for fm and pm are simple and require practically no audio power. There is also the advantage that, since there is no amplitude variation in the signal, interference to broadcast reception resulting from rectification of the transmitted signal in the audio circuits of the bc receiver is substantially eliminated.

Frequency Modulation

Fig. 14-2 is a representation of frequency modulation. When a modulating signal is applied, the carrier frequency is increased during one half cycle of the modulating signal and decreased during the half cycle of opposite polarity. This is indicated in the drawing by the fact that the rf cycles occupy less time (higher frequency) when the modulating signal is positive, and more time (lower frequency) when the modulating signal is negative. The change in the carrier frequency (frequency deviation) is proportional to the instantaneous amplitude of the modulating signal, so the deviation is small when the instantaneous amplitude of the modulating signal is small, and is greatest when the modulating signal reaches its peak, either positive or negative.

As shown by the drawing, the amplitude of the signal does not change during modulation.

Phase Modulation

If the phase of the current in a circuit is changed there is an instantaneous frequency change during the time that the phase is being shifted. The amount of frequency change, or deviation, depends on how rapidly the phase shift is accomplished. It is also dependent upon the total amount of the phase shift. In a properly operating

Fig. 14-1 — The use of vhf fm mobile rigs in conjunction with repeaters has improved the communications of many amateur emergency groups. Here F2BQ relays traffic being received via 2-meter fm on a 40-meter ssb link.

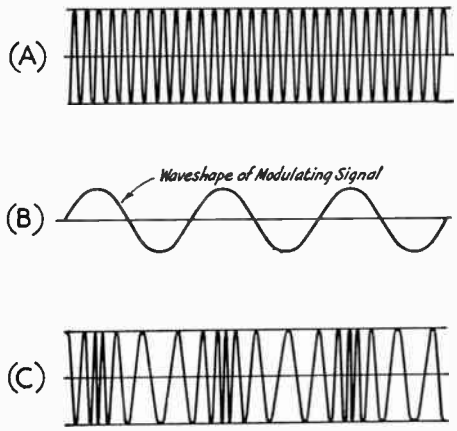

Fig. 14-2 — Graphical representation of frequency modulation. In the unmodulated carrier at A, each rf cycle occupies the same amount of time. When the modulating signal, B, is applied, the radio frequency is increased and decreased according to the amplitude and polarity of the modulating signal.

pm system the amount of phase shift is proportional to the instantaneous amplitude of the modulating signal. The rapidity of the phase shift is directly proportional to the frequency of the modulating signal. Consequently, the frequency deviation in pm is proportional to both the amplitude and frequency of the modulating signal. The latter represents the outstanding difference between fm and pm, since in fm the frequency deviation is proportional only to the amplitude of the modulating signal.

FM and PM Sidebands

The sidebands set up by fm and pm differ from those resulting from a-m in that they occur at integral multiples of the modulating frequency on either side of the carrier rather than, as in a-m, consisting of a single set of side frequencies for each modulating frequency. An fm or pm signal therefore inherently occupies a wider channel than a-m.

The number of "extra" sidebands that occur in fm and pm depends on the relationship between the modulating frequency and the frequency deviation. The ratio between the frequency deviation, in Hertz, and the modulating frequency, also in Hertz, is called the modulating index. That is,

$$\textit{Modulation index} = \frac{\textit{Carrier frequency deviation}}{\textit{Modulating frequency}}$$

Example: The maximum frequency deviation in an f.m. transmitter is 3000 Hz. either side of the carrier frequency. The modulation index when the modulating frequency is 1000 Hz. is

$$\text{Modulation index} = \frac{3000}{1000} = 3$$

At the same deviation with 3000-Hz. modulation the index would be 1; at 100 Hz. it would be 30, and so on.

In pm the modulation index is constant regardless of the modulating frequency; in fm it varies with the modulating frequency, as shown in the above example. In an fm system the ratio of the *maximum* carrier-frequency deviation to the *highest* modulating frequency used is called the deviation ratio.

Fig. 14-3 shows how the amplitudes of the carrier and the various sidebands vary with the modulation index. This is for single-tone modulation; the first sideband (actually a pair, one above and one below the carrier) is displaced from the carrier by an amount equal to the modulating frequency, the second is twice the modulating frequency away from the carrier, and so on. For example, if the modulating frequency is 2000 Hz and the carrier frequency is 29,500 kHz, the first sideband pair is at 29,498 kHz and 29,502 kHz, the second pair is at 29,496 kHz and 29,504 kHz, the third at 29,494 kHz and 29,506 kHz, etc. The amplitudes of these sidebands depend on the modulation index, not on the frequency deviation.

Note that as shown by Fig. 14-3, the carrier strength varies with the modulation index. (In amplitude modulation the carrier strength is constant; only the sideband amplitude varies.) At a modulation index of approximately 2.4 the carrier disappears entirely. It then becomes "negative" at a higher index, meaning that its phase is reversed as compared to the phase without modulation. In fm and pm the energy that goes into the sidebands is taken from the carrier, the *total* power remaining the same regardless of the modulation index.

Since there is no change in amplitude with modulation, an fm or pm signal can be amplified without distortion by an ordinary Class C amplifier. The modulation can take place in a very low-level stage and the signal can then be amplified by either frequency multipliers or straight-through amplifiers.

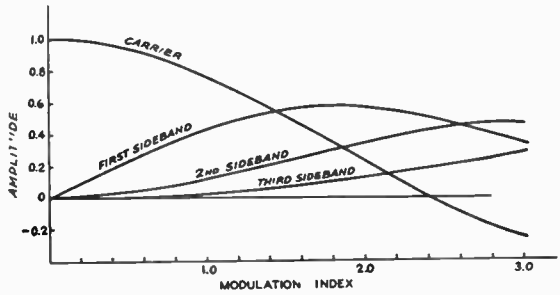

Fig. 14-3 — How the amplitude of the pairs of sidebands varies with the modulation index in an fm or pm signal. If the curves were extended for greater values of modulation index it would be seen that the carrier amplitude goes through zero at several points. The same statement also applies to the sidebands.

If the modulated signal is passed through one or more frequency multipliers, the modulation index is multiplied by the same factor that the carrier frequency is multiplied. For example, if modulation is applied on 3.5 MHz and the final output is on 28 MHz, the total frequency multiplication is 8 times, so if the frequency deviation is 500 Hz at 3.5 MHz it will be 4000 Hz at 28 MHz. Frequency multiplication offers a means for obtaining practically any desired amount of frequency deviation, whether or not the modulator itself is capable of giving that much deviation without distortion.

Bandwidth

FCC amateur regulations (Part 97.61) limit the bandwidth of F3 (frequency and phase modulation) to that of an a-m transmission having the same audio characteristics below 29.0 MHz and in the 50.1- to 52.5-MHz frequency segment. Greater bandwidths are allowed from 29.0 to 29.7 MHz and above 52.5 MHz.

If the modulation index (with single-tone modulation) does not exceed 0.6 or 0.7, the most important extra sideband, the second, will be at least 20 dB below the unmodulated carrier level, and this should represent an effective channel width about equivalent to that of an a-m signal. In the case of speech, a somewhat higher modulation index can be used. This is because the energy distribution in a complex wave is such that the modulation index for any one frequency component is reduced as compared to the index with a sine wave having the same peak amplitude as the voice wave.

The chief advantage of fm or pm for frequencies below 30 MHz is that it eliminates or reduces certain types of interference to broadcast reception. Also, the modulating equipment is relatively simple and inexpensive. However, assuming the same unmodulated carrier power in all cases, narrow-band fm or pm is not as effective as a-m *with the methods of reception used by many amateurs.* To obtain the benefits of the fm mode, a good fm receiver is required. As shown in Fig. 14-3, at an index of 0.6 the amplitude of the first sideband is about 25 percent of the unmodulated-carrier amplitude; this compares with a sideband amplitude of 50 percent in the case of a 100 percent modulated a-m transmitter. When copied on an a-m receiver, a narrow-band fm or pm transmitter is about equivalent to a 100-percent modulated a-m transmitter operating at one-fourth the carrier power. On a suitable (fm) receiver, fm is as good or better than a-m, watt for watt.

Three deviation amounts are now standard practice: 15, 5 and 2.5 kHz, which in the current vernacular of fm users, are known as wide band, narrow band, and sliver band, respectively. (See box above.) The 2.5-3 kHz deviation (called nbfm by OTs) was popular for a time on the vhf bands and 10 meters after World War II. Deviation figures are given for the frequency swing in one direction. The rule-of-thumb for determination of bandwidth requirements for an fm system is:

$$2\,(\Delta F) + F_{Amax}$$

where ΔF is one half of the total frequency deviation, and F_{Amax} is the maximum audio frequency (3 kHz for communications purposes). Thus, for narrow-band fm, the bandwidth equals (2) 5 + 3 or 13 kHz. Wide-band systems need a 33-kHz receiver bandwidth.

Comparison of FM and PM

Frequency modulation cannot be applied to an amplifier stage, but phase modulation can; pm is therefore readily adaptable to transmitters employing oscillators of high stability such as the crystal-controlled type. The amount of phase shift that can be obtained with good linearity is such that the maximum practicable modulation index is about 0.5. Because the phase shift is proportional to the modulating frequency, this index can be used only at the highest frequency present in the modulating signal, assuming that all frequencies will at one time or another have equal amplitudes. Taking 3000 Hz as a suitable upper limit for voice work, and setting the modulation index at 0.5 for 3000 Hz, the frequency response of the speech-amplifier system above 3000 Hz must be sharply attenuated, to prevent excess splatter. (See Fig. 14-4.) Also, if the "tinny" quality of pm as received on an fm receiver is to be avoided, the pm must be changed to fm, in which the modulation index decreases in inverse proportion to the modulating frequency. This requires shaping the speech-amplifier frequency-response curve in such a way that the output voltage is inversely proportional to frequency over most of the voice range. When this is done the maximum modulation index can only be used to some relatively low audio frequency, perhaps 300 to 400 Hz in voice transmission, and must decrease in proportion to the increase in frequency. The result is that the maximum linear frequency deviation is only one or two hundred Hz, when pm is changed to fm. To increase the deviation for narrow band requires a frequency multiplication of 8 times or more.

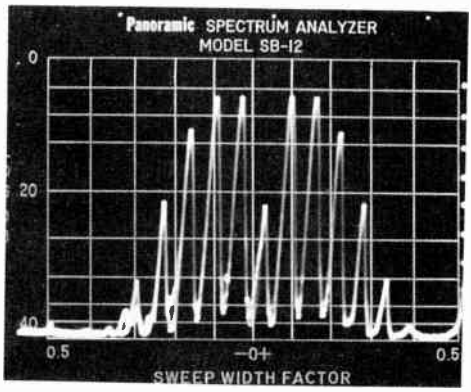

Fig. 14-4 — Output frequency spectrum of a narrow-band fm transmitter modulated by a 1-kHz tone.

It is relatively easy to secure a fairly large frequency deviation when a self-controlled oscillator is frequency-modulated directly. (True frequency modulation of a crystal-controlled oscillator results in only very small deviations and so requires a great deal of frequency multiplication.) The chief problem is to maintain a satisfactory degree of carrier stability, since the greater the inherent stability of the oscillator the more difficult it is to secure a wide frequency swing with linearity.

METHODS OF FREQUENCY MODULATION

Direct FM

A simple and satisfactory device for producing fm in the amateur transmitter is the reactance modulator. This is a vacuum tube or transistor connected to the rf tank circuit of an oscillator in such a way as to act as a variable inductance or capacitance.

Fig. 14-5A is a representative circuit. Gate 1 of the modulator MOSFET is connected across the oscillator tank circuit, C1L1, through resistor R1 and blocking capacitor C2. C3 represents the input capacitance of the modulator transistor. The resistance of R1 is made large compared to the reactance of C3, so the rf current through R1C3 will be practically in phase with the rf voltage appearing at the terminals of the tank circuit.

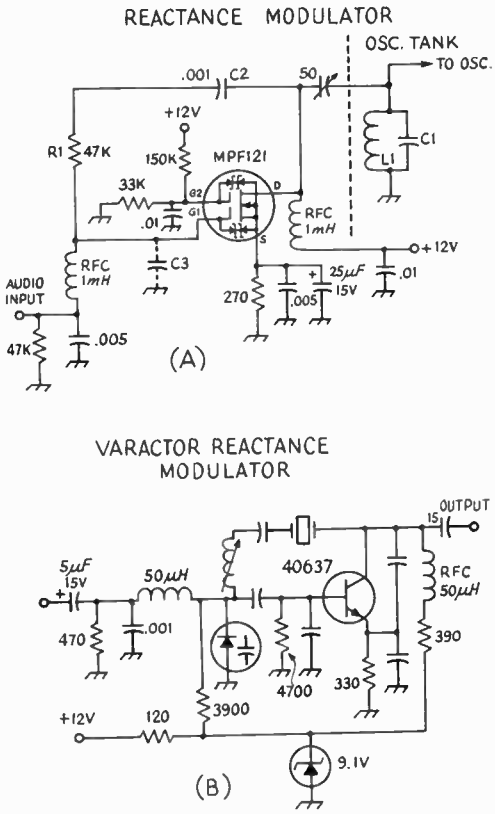

Fig. 14-5 — Reactance modulators using (A) a high-transconductance MOSFET and (B) a varactor diode.

However, the voltage across C3 will lag the current by 90 degrees. The rf current in the drain circuit of the modulator will be in phase with the grid voltage, and consequently is 90 degrees behind the current through C3, or 90 degrees behind the rf tank voltage. This lagging current is drawn through the oscillator tank, giving the same effect as though an inductance were connected across the tank. The frequency increases in proportion to the amplitude of the lagging plate current of the modulator. The audio voltage, introduced through a radio-frequency choke, varies the transconductance of the transistor and thereby varies the rf drain current.

The modulated oscillator usually is operated on a relatively low frequency, so that a high order of carrier stability can be secured. Frequency multipliers are used to raise the frequency to the final frequency desired.

A reactance modulator can be connected to a crystal oscillator as well as to the self-controlled type as shown in Fig. 14-5B. However, the resulting signal can be more phase-modulated than it is frequency-modulated, for the reason that the frequency deviation that can be secured by varying the frequency of a crystal oscillator is quite small.

The sensitivity of the modulator (frequency change per unit change in grid voltage) depends on the transconductance of the modulator transistor. It increases when R1 is made smaller in comparison with C3. It also increases with an increase in L/C ratio in the oscillator tank circuit. However, for highest carrier stability it is desirable to use the largest tank capacitance that will permit the desired deviation to be secured while keeping within the limits of linear operation.

A change in *any* of the voltages on the modulator transistor will cause a change in rf drain current, and consequently a frequency change. Therefore it is advisable to use a regulated power supply for both modulator and oscillator.

Indirect FM

The same type of reactance-tube circuit that is used to vary the tuning of the oscillator tank in fm can be used to vary the tuning of an amplifier tank and thus vary the phase of the tank current for pm. Hence the modulator circuit of Fig. 14-5A or 14-6A can be used for pm if the reactance transistor or tube works on an amplifier tank instead of directly on a self-controlled oscillator. If audio shaping is used in the speech amplifier, as described above, fm instead of pm will be generated by the phase modulator.

The phase shift that occurs when a circuit is detuned from resonance depends on the amount of detuning and the Q of the circuit. The higher the

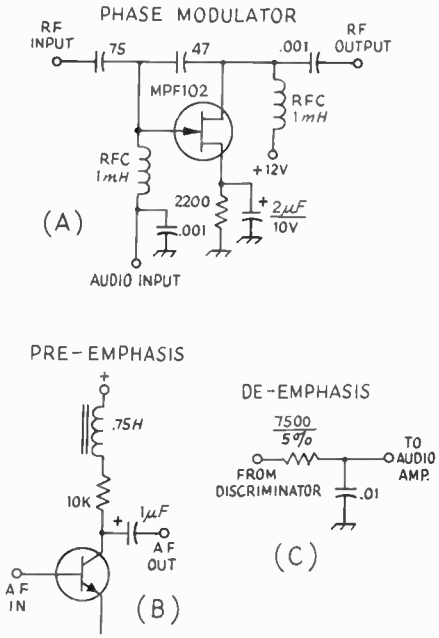

Fig. 14-6 — (A) The phase-shifter type of phase modulator. (B) Pre-emphasis and (C) de-emphasis circuits.

Q, the smaller the amount of detuning needed to secure a given number of degrees of phase shift. If the *Q* is at least 10, the relationship between phase shift and detuning (in kHz either side of the resonant frequency) will be substantially linear over a phase-shift range of about 25 degrees. From the standpoint of modulator sensitivity, the *Q* of the tuned circuit on which the modulator operates should be as high as possible. On the other hand, the effective *Q* of the circuit will not be very high if the amplifier is delivering power to a load since the load resistance reduces the *Q*. There must therefore be a compromise between modulator sensitivity and rf power output from the modulated amplifier. An optimum figure for *Q* appears to be about 20; this allows reasonable loading of the modulated amplifier and the necessary tuning variation can be secured from a reactance modulator without difficulty. It is advisable to modulate at a low power level.

Reactance modulation of an amplifier stage usually results in simultaneous amplitude modulation because the modulated stage is detuned from resonance as the phase is shifted. This must be eliminated by feeding the modulated signal through an amplitude limiter or one or more "saturating" stages – that is, amplifiers that are operated Class C and driven hard enough so that variations in the amplitude of the input excitation produce no appreciable variations in the output amplitude.

For the same type of reactance modulator, the speech-amplifier gain required is the same for pm as for fm. However, as pointed out earlier, the fact that the actual frequency deviation increases with the modulating audio frequency in pm makes it necessary to cut off the frequencies above about 3000 Hz before modulation takes place. If this is not done, unnecessary sidebands will be generated at frequencies considerably away from the carrier.

SPEECH PROCESSING FOR FM

The speech amplifier preceding the modulator follows ordinary design, except that no power is taken from it and the af voltage required by the modulator grid usually is small – not more than 10 or 15 volts, even with large modulator tubes, and only a volt or two for transistors. Because of these modest requirements, only a few speech stages are needed; a two-stage amplifier consisting of two bipolar transistors, both resistance-coupled, will more than suffice for crystal ceramic or hi-Z dynamic microphones. For more information on speech amplifiers see Chapter 13.

Several forms of speech processing produce worthwhile improvements in fm system performance. It is desirable to limit the peak amplitude of the audio signal applied to an fm or pm modulator, so that the deviation of the fm transmitter will not exceed a preset value. This peak limiting is usually accomplished with a simple audio clipper which is placed between the speech amplifier and modulator. The clipping process produces high-order harmonics which, if allowed to pass through to the modulator stage, would create unwanted sidebands. Therefore, an audio low-pass filter with a cut-off frequency between 2.5 and 3 kHz is needed at the output of the clipper. Excess clipping can cause severe distortion of the voice signal. An audio processor consisting of a compressor and a clipper, such as described in Chapter 13, has been found to produce audio with a better sound (i.e., less distortion) than a clipper alone.

To reduce the amount of noise in some fm communications systems, an audio shaping network called pre-emphasis is added at the transmitter to proportionally attenuate the lower audio frequencies, giving an even spread to the energy in the audio band. This results in an fm signal of nearly constant energy distribution. The reverse is done at the receiver, called de-emphasis, to restore the audio to its original relative proportions. Sample circuits are shown in Fig. 14-6.

FM EXCITERS

Fm exciters and transmitters take two general forms. One, shown at Fig. 14-7A, consists of a reactance modulator which shifts the frequency of an oscillator to generate an fm signal directly. Successive multiplier stages provide output on the desired frequency, which is amplified by a PA stage. This system has a disadvantage in that, if the oscillator is free running, it is difficult to achieve sufficient stability for vhf use. If a crystal-controlled oscillator is employed, unless the amount that the crystal frequency is changed is kept small, it is difficult to achieve equal amounts of frequency swing.

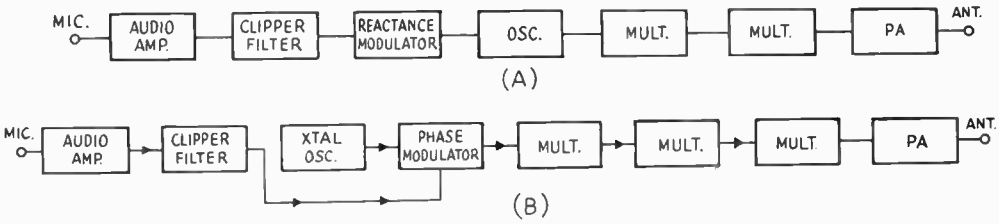

Fig. 14-7 — Block diagrams of typical fm exciters.

The indirect method of generating fm shown in Fig. 14-7B is currently popular. Shaped audio is applied to a phase modulator to generate fm. As the amount of deviation produced is very small, then a large number of multiplier stages is needed to achieve wide-band deviation at the operating frequency. In general, the system shown at A will require a less complex circuit than that at B, but the indirect method (B) often produces superior results.

TESTING AN FM TRANSMITTER

Accurate checking of the operation of an fm or pm transmitter requires different methods than the corresponding checks on an a-m or ssb set. This is because the common forms of measuring devices either indicate amplitude variations only (a milliammeter, for example), or because their indications are most easily interpreted in terms of amplitude.

The quantities to be checked in an fm transmitter are the linearity and frequency deviation and the output frequency, if the unit uses crystal control. The methods of checking differ in detail.

Frequency Checking

The crystal-controlled, channelized operation that is now popular with amateur fm users requires that a transmitter be held close to the desired channel, at least within a few hundred Hertz, even in a wide-band system. Having the transmitter on the proper frequency is particularly important when operating through a repeater. The rigors of mobile and portable operation make a frequency check of a channelized transceiver a good idea at three-month intervals.

Frequency meters generally fall into categories, the heterodyne type and the digital counter. For amateur use, the vhf/uhf counterparts of the

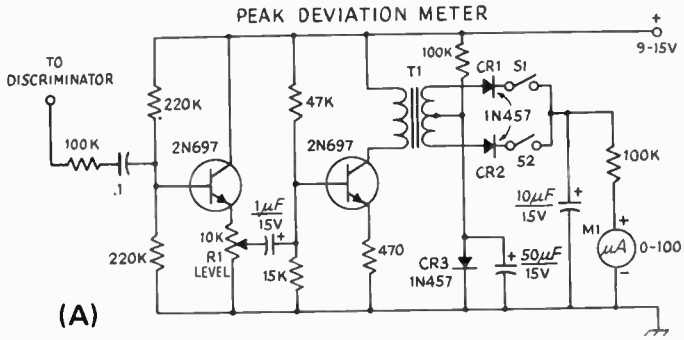

(B)

Audio Frequency	Deviation Produced 1st Null	2nd Null	3rd Null
905.8 Hz	±2.18 kHz	± 5.00 kHz	± 7.84 kHz
1000.0 Hz	±2.40 kHz	± 5.52 kHz	± 8.65 kHz
1500.0 Hz	±3.61 kHz	± 8.28 kHz	±12.98 kHz
1811.0 Hz	±4.35 kHz	±10.00 kHz	±15.67 kHz
2000.0 Hz	±4.81 kHz	±11.04 kHz	±17.31 kHz
2079.2 Hz	±5.00 kHz	±11.48 kHz	±17.99 kHz
2805.0 Hz	±6.75 kHz	±15.48 kHz	±24.27 kHz

Fig. 14-8 — (A) Schematic diagram of the deviation meter. Resistors are 1/2-watt composition and capacitors are ceramic, except those with polarity marked, which are electrolytic. CR1-CR3, incl. are high-speed silicon switching diodes. R1 is a linear-taper composition control, and S1, S2 are spst toggle switches. T1 is a miniature audio transformer with a 10,000-ohm primary and 20,000-ohm center-tapped secondary (Triad A31X). (B) Chart of audio frequencies which will produce a carrier null when the deviation of an fm transmitter is set for the values given.

popular BC-221 frequency meter, the TS-174 and TS-175, will provide sufficient accuracy. Frequency counters that will work directly up to 500 MHz and higher are available, but their cost is high. The less expensive low-frequency counters can be employed using a scaler, a device which divides an input frequency by a preset ratio, usually 10 or 100. The Heathkit IB-102 scaler may be used up to 175 MHz, using a counter with a 2-MHz (or more) upper frequency limit. If the counting system does not have a sufficient upper frequency limit to measure the output of an fm transmitter directly, one of the frequency-multiplier stages can be sampled to provide a signal in the range of the measurement device. Alternatively, a crystal-controlled converter feeding an hf receiver which has accurate frequency readout can be employed, if a secondary standard is available to calibrate the receiving system.

Deviation and Deviation Linearity

A simple deviation meter can be assembled following the diagram of Fig. 14-8A. This circuit was designed by K6VKZ. The output of a wide-band receiver discriminator (before any de-emphasis) is fed to two amplifier transistors. The output of the amplifier section is transformer coupled to a pair of rectifier diodes to develop a dc voltage for the meter, M1. There will be an indication on the meter with no signal input because of detected noise, so the accuracy of the instrument will be poor on weak signals.

To calibrate the unit, signals of known deviation will be required. If the meter is to be set to read 0-15 kHz, then a 7.5-kHz deviation test signal should be employed. R1 is then adjusted until M1 reads half scale, 50 μA. To check the peak deviation of an incoming signal, close both S1 and S2. Then, read the meter. Opening first one switch and then the other will indicate the amount of positive and negative deviation of the signal, a check of deviation linearity.

Measurement of Deviation Using Bessel Functions

Using a math. relationship known as the Bessel Function it is possible to predict the points at which, with certain audio-input frequencies and predetermined deviation settings, the carrier output of an fm transmitter will disappear completely. Thus, by monitoring the carrier frequency with a receiver, it will be possible by ear to identify the deviation at which the carrier is nulled. A heterodyne signal at either the input or receiver i-f is required so that the carrier will produce a beat note which can easily be identified. Other tones will be produced in the modulation process, so some concentration is required by the operator when making the test. With an audio tone selected from the chart (Fig. 14-8B), advance the deviation control slowly until the first null is heard. If a higher-order null is desired, continue advancing the control further until the second, and then the third, null is heard. Using a carrier null beyond the third is generally not practical.

For example, if a 905.8-Hz tone is used, the transmitter will be set for 5-kHz deviation when the second null is reached. The second null achieved with a 2805-Hz audio input will set the transmitter deviation at 15.48 kHz. The Bessel-function approach can be used to calibrate a deviation meter, such as the unit shown in Fig. 14-8A

RECEPTION OF FM SIGNALS

Receivers for fm signals differ from others principally in two features – there is no need for linearity preceding detection (it is, in fact, advantageous if amplitude variations in signal and background noise can be "washed out") and the detector must be capable of converting frequency variations in the incoming signal into amplitude variations.

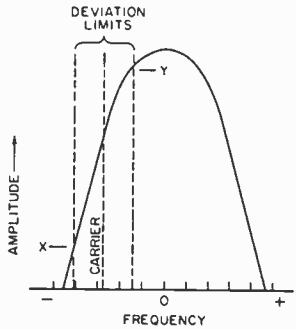

Fig. 14-9 – Fm detector characteristics. Slope detection, using the sloping side of the receivers selectivity curve to convert fm to a-m for subsequent detection.

Frequency-modulated signals can be received after a fashion on any ordinary receiver. The receiver is tuned to put the carrier frequency partway down on one side of the selectivity curve. When the frequency of the signal varies with modulation it swings as indicated in Fig. 14-9, resulting in an a-m output varying between X and Y. This is then rectified as an a-m signal.

With receivers having steep-sided selectivity curves, the method is not very satisfactory because the distortion is quite severe unless the frequency deviation is small, since the frequency deviation and output amplitude is linear over only a small part of the selectivity curve.

The FM Receiver

Block diagrams of an a-m/ssb and an fm receiver are shown in Fig. 14-10. Fundamentally, to achieve a sensitivity of less than one microvolt, an fm receiver requires a gain of several million – too much total gain to be accomplished with stability on a single frequency. Thus, the use of the

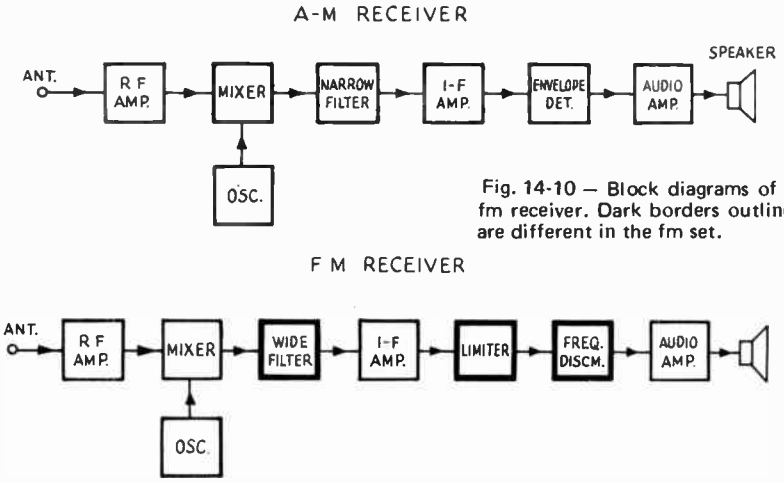

Fig. 14-10 — Block diagrams of (A) an a-m (B) an fm receiver. Dark borders outline the sections that are different in the fm set.

superheterodyne circuit has become standard practice. Three major differences will be apparent from a comparison of the two block diagrams. The fm receiver employs a wider-bandwidth filter, a different detector, and has a limiter stage added between the i-f amplifier and the detector. Otherwise the functions, and often the circuits, of the rf, oscillator, mixer and audio stages will be the same in either receiver.

In operation, the noticeable difference between the two receivers is the effect of noise and interference on an incoming signal. From the time of the first spark transmitters, "rotten QRM" has been a major problem for amateurs. The limiter and discriminator stages in an fm set can eliminate a good deal of impulse noise, except that noise which manages to acquire a frequency-modulation characteristic. Accurate alignment of the receiver i-f system and phase tuning of the detector are required to achieve good noise suppression. Fm receivers perform in an unusual manner when QRM is present, exhibiting a characteristic known as the *capture effect.* The loudest signal received, even if it is only two or three times stronger than other stations on the same frequency, will be the only transmission demodulated. By comparison, an S9 a-m or cw signal can suffer noticeable interference from an S2 carrier.

Bandwidth

Most fm sets that use tubes achieve i-f selectivity by using a number of overcoupled transformers. The wide bandwidth and phase-response characterisitic needed in the i-f system dictate careful design and alignment of all interstage transformers.

F M FILTERS

Manufacturer	*Model*	*Center Frequency*	*Nonimal Bandwidth*	*Ultimate Rejection*	*Impedance (r) In*	*Out*	*Insertion Loss*	*Crystal Discriminator*
KVG (1)	XF-9E	9.0 MHz	12 kHz	90 dB	1200	1200	3 dB	XD9-02
KVG (1)	XF-107A	10.7 MHz	12 kHz	90 dB	820	820	3.5 dB	XD107-01
KVG (1)	XF-107B	10.7 MHz	15 kHz	90 dB	910	910	3.5 dB	XD107-01
KVG (1)	XF-107C	10.7 MHz	30 kHz	90 dB	2000	2000	4.5 dB	XD107-01
Heath Dynamics (2)	–	21.5 MHz	15 kHz	90 dB	550	550	3 dB	–
Heath Dynamics (2)	–	21.5 MHz	30 kHz	90 dB	1100	1100	2 dB	–
E.S. (3)	FB-6D	10.7 MHz	15 kHz	80 dB	950	950	2 dB	AB-1C
E.S. (3)	10-MA	10.7 MHz	30 kHz	80 dB	2000	2000	4 dB	AB-1C
E.S. (3)	EL-3A	11.5 MHz	36 kHz	70 dB	50	50	4 dB	AL-1
E.S. (3)	DR-9	21.4 MHz	20 kHz	40 dB	750	750	5 dB	AR-10
Clevite (4)	TCF4-12D3CA	455 kHz	12 kHz	60 dB	40k	2200	6 dB	–
Clevite (4)	TCF4-18G45A	455 kHz	18 kHz	50 dB	40k	2200	6 dB	–
Clevite (4)	TCF6-30D55A	455 kHz	30 kHz	60 dB	20k	1000	5 dB	–

Fig. 14-11 — A list of fm-bandwidth filters that are available to amateurs. Manufacturer's addresses are as follows:

1) Spectrum International, P. O. Box 87, Topsfield, MA 01983.
2) Heath Dynamics, Inc., 6050 N. 52nd Avenue, Glendale, AZ 85301.
3) E. S. Electronic Labs, 301 Augustus, Excelsior Springs, MD 64024.
4) Semiconductor Specialists, Inc., P. O. Box 66125, O'Hare International Airport, Chicago, IL 60666. (Minimum order $5.00.)

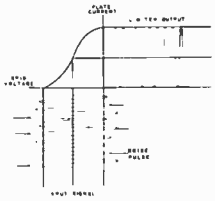

Fig. 14-12 – Representation of limiter action. Amplitude variations on the signal are removed by the diode action of the grid- and plate-current saturation.

For the average ham, the use of a high-selectivity filter in a homemade receiver offers some simplification of the alignment task. Following the techniques used in ssb receivers, a crystal or ceramic filter should be placed in the circuit as close as possible to the antenna connector – at the output of the first mixer, in most cases. Fig. 14-11 lists a number of suitable filters that are available to amateurs. Prices for these filters are in the range of $10 to $30. Experimenters who wish to "roll their own" can use surplus hf crystals, as outlined in ARRL's *Single Sideband for the Radio Amateur*, or ceramic resonators.

One item of concern to every amateur fm user is the choice of i-f bandwidth for his receiver, as both 15- and 5-kHz deviation are now in common use on the amateur bands. A wide-band receiver can receive narrow-band signals, suffering only some loss of audio in the detection process. However, a wideband signal will be badly distorted when received on a narrow-band rig. At this point it seems reasonable to assume that increasing fm activity and continued production of commercial narrow-band transceivers may gradually shift amateur operation to a 5-kHz deviation standard. But, as with the a-m operators, the wide-band enthusiasts will be around for some time to come, lured by inexpensive surplus wide-band gear.

Limiters

When fm was first introduced, the main selling point used for the new mode was the noise-free reception possibilities. The circuit in the fm receiver that has the task of chopping off noise and amplitude modulation from an incoming signal is the *limiter*. Most types of fm detectors respond to both frequency and amplitude variations of the signal. Thus, the limiter stages preceding the detector are included to "cleanse" the signal so that only the desired frequency modulation will be demodulated. This action can be seen in Fig. 14-13.

Limiter stages can be designed using tubes, transistors, or ICs. For a tube to act as a limiter, the applied B voltages are chosen so that the stage will overload easily, even with a small amount of signal input. A sharp-cutoff pentode such as the 6BH6 is usually employed with little or no bias applied. As shown in Fig. 14-12, the input signal limits when it is of sufficient amplitude so that diode action of the grid and plate-current saturation clip both sides of the input signal, producing a constant-amplitude output voltage.

Obviously, a signal of considerable strength is required at the input of the limiter to assure full clipping, typically several volts for tubes, one volt for transistors, and several hundred microvolts for ICs. Limiting action should start with an rf input of 0.2 μV or less, so a large amount of gain is required between the antenna terminal and the limiter stages. For example, the Motorola 80D has eight tubes before the limiter, and the solid-state MOTRAC receivers use nine transistor stages to get sufficient gain before the first limiter. The new ICs offer some simplification of the i-f system as they pack a lot of gain into a single package.

When sufficient signal arrives at the receiver to start limiting action, the set *quiets* – that is, the background noise disappears. The sensitivity of an fm receiver is rated in terms of the amount of input signal required to produce a given amount of quieting, usually 20 dB. Current practice using the new solid-state devices can produce receivers which achieve 20 dB quieting with 0.15 to 0.5 μV of input signal.

A single tube or transistor stage will not provide good limiting over a wide range of input signals. Two stages, with different input time constants, are a minimum requirement. The first stage is set to handle impulse noise satisfactorily while the second is designed to limit the range of signals passed on by the first. At frequencies below 1 MHz it is useful to employ untuned *RC*-coupled limiters which provide sufficient gain without a tendency toward oscillation.

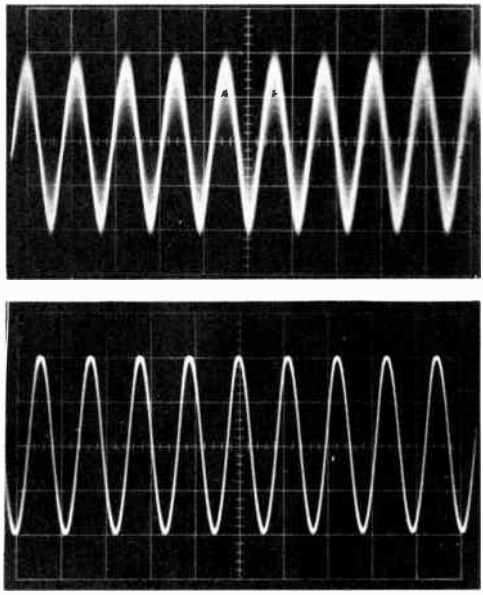

(A)

(B)

Fig. 14-13 – (A) Input wave form to a limiter stage shows a-m and noise. (B) The same signal, after passing through two limiter stages, is devoid of a-m components.

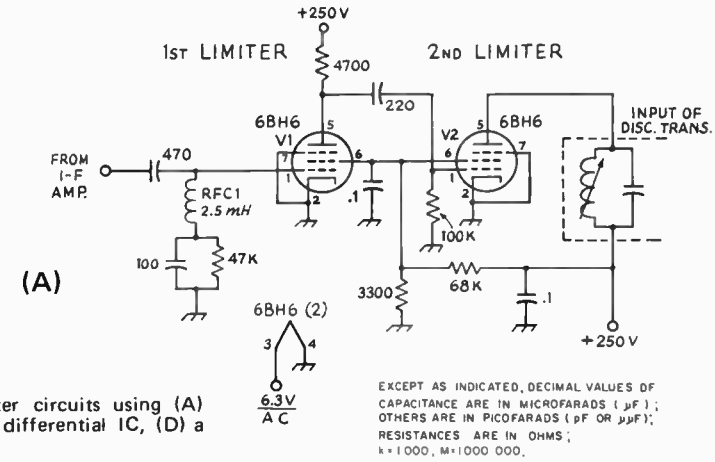

Fig. 14-14 — Typical limiter circuits using (A) tubes, (B) transistors, (C) a differential IC, (D) a high-gain linear IC.

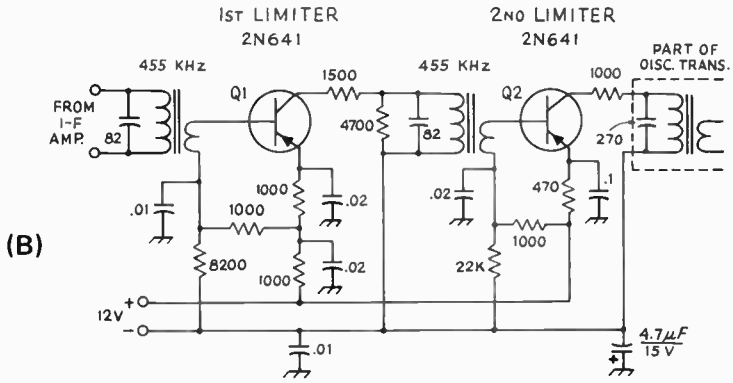

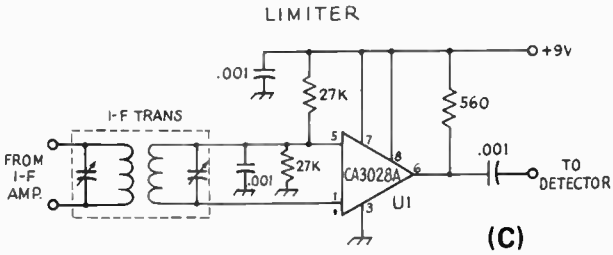

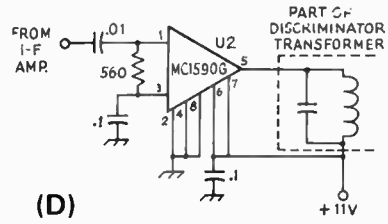

Fig. 14-14A shows a two-stage limiter using sharp-cutoff tubes, while 14-14B has transistors in two stages biased for limiter service. The base bias on either transistor may be varied to provide limiting at a desired level. The input-signal voltage required to start limiting action is called the *limiting knee*, referring to the point at which collector (or plate) current ceases to rise with increased input signal. Modern ICs have limiting knees of 100 mV for the circuit shown in Fig. 14-14C, using the CA3028A or MC1550G, or 200 μV for the Motorola MC1590G of Fig. 14-14D. Because the high-gain ICs such as the CA3076 and MC1590G contain as many as six or eight active stages which will saturate with sufficient input, one of these devices provides superior limiter performance compared to a pair of tubes or transistors.

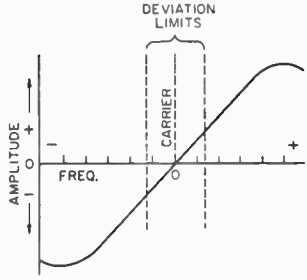

Fig. 14-15 — The characteristic of an fm discriminator.

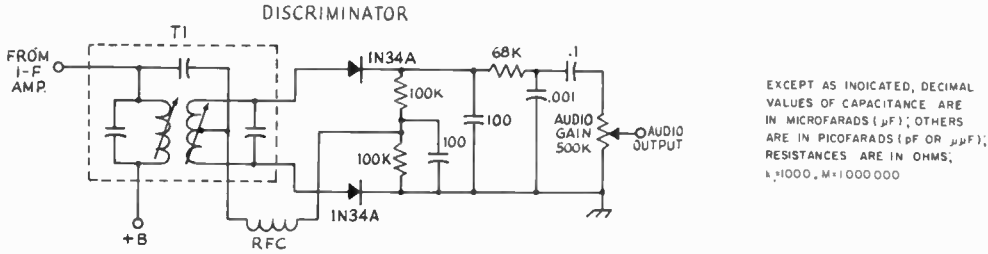

Fig. 14-16 — Typical frequency-discriminator circuit used for fm detection. T1 is a Miller 12-C45.

Detectors

The first type of fm detector to gain popularity was the frequency discriminator. The characteristic of such a detector is shown in Fig. 14-15. When the fm signal has no modulation, and the carrier is at point O, the detector has no output. When audio input to the fm transmitter swings the signal higher in frequency, the rectified output increases in the positive direction. When the frequency swings lower the output amplitude increases in the negative direction. Over a range where the discriminator is linear (shown as the straight portion of the line), the conversion of fm to a-m which is taking place will be linear.

A practical discriminator circuit is shown in Fig. 14-16. The fm signal is converted to a-m by transformer T1. The voltage induced in the T1 secondary is 90 degrees out of phase with the current in the primary. The primary signal is introduced through a center tap on the secondary, coupled through a capacitor. The secondary voltages combine on each side of the center tap so that the voltage on one side leads the primary signal while the other side lags by the same amount. When rectified, these two voltages are equal and of opposite polarity, resulting in zero-voltage output. A shift in input frequency causes a shift in the phase of the voltage components that results in an increase of output amplitude on one side of the secondary, and a corresponding decrease on the other side. The differences in the two changing voltages, after rectification, constitute the audio output.

In the search for a simplified fm detector, RCA developed a circuit that has now become standard in entertainment radios which eliminated the need for a preceding limiter stage. Known as the *ratio detector*, this circuit is based on the idea of dividing a dc voltage into a ratio which is equal to the ratio of the amplitudes from either side of a discriminator-transformer secondary. With a detector that responds only to ratios, the input signal may vary in strength over a wide range without causing a change in the level of output voltage — fm can be detected, but not a-m. In an actual ratio detector, Fig. 14-17, the dc voltage required is developed across two load resistors, shunted by an electrolytic capacitor. Other differences include the two diodes, which are wired in series aiding rather than series opposing, as in the standard discriminator circuit. The recovered audio is taken from a tertiary winding which is tightly coupled to the primary of the transformer. Diode-load resistor values are selected to be lower (5000 ohms or less) than for the discriminator.

The sensitivity of the ratio detector is one half that of the discriminator. In general, however, the transformer design values for Q, primary-secondary coupling, and load will vary greatly, so the actual performance differences between these two types of fm detectors are usually not significant. Either circuit can provide excellent results. In operation, the ratio detector will not provide sufficient limiting for communications service, so this detector also is usually preceded by at least a single limiting stage.

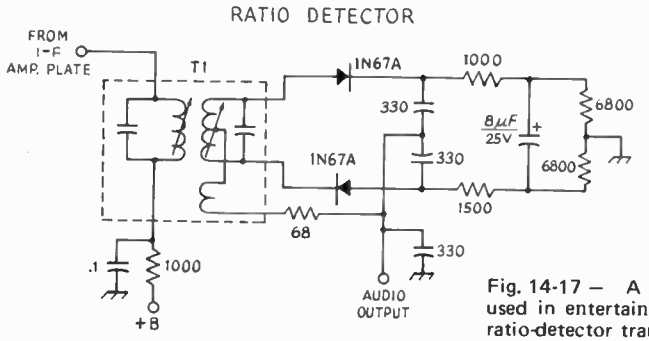

Fig. 14-17 — A ratio detector of the type often used in entertainment radio and TV sets. T1 is a ratio-detector transformer such as the Miller 1606.

Fig. 14-18 — Crystal discriminator. C1 and L1 are resonant at theintermediate frequency. C2 is equal in value to C3. C4 corrects any circuit imbalance so that equal amounts of signal are fed to the detector diodes.

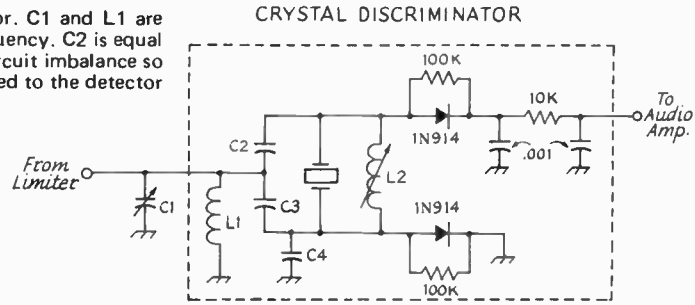

New Detector Designs

The difficulties often encountered in building and aligning *LC* discriminators have inspired research that has resulted in a number of adjustment-free fm detector designs. The *crystal discriminator* utilizes a quartz resonator, shunted by an inductor, in place of the tuned-circuit secondary used in a discriminator transformer. A typical circuit is shown in Fig. 14-18. Some commercially-made crystal discriminators have the input-circuit inductor, L1, built in (C1 must be added) while in other types both L1 and C1 must be supplied by the builder. Fig. 14-18 shows typical component values; unmarked parts are chosen to give the desired bandwidth. Sources for crystal discriminators are listed in Fig. 14-11.

The PLL

Now that the phase-locked loop (PLL) has been reduced to a single IC package, this circuit is destined to revolutionize some facets of receiver design. Introduction by Signetics of a PLL in a single flat-pack IC, followed by Motorola and Fairchild (who are making the PLL in separate building-block ICs), allows a builder to get to work with a minimum of bother.

A basic phase-locked loop (Fig. 14-19A) consists of a phase detector, a filter, a dc amplifier, and a voltage-controlled oscillator (VCO). The VCO runs at a frequency close to that of an incoming signal. The phase detector produces an error voltage if any difference in frequency exists between the VCO and the i-f signal. This error voltage is applied to the VCO. Any changes in the frequency of the incoming signal are sensed at the detector and the error voltage readjusts the VCO frequency so that it remains locked to the intermediate frequency. The bandwidth of the system is determined by a filter on the error-voltage line.

Because the error voltage is a copy of the audio variations originally used to shift the frequency of the transmitter, the PLL functions directly as an fm detector. The sensitivity achieved with the Signetics NE565 PLL is good – about 1 mV for the circuit shown in Fig. 14-19B. No transformers or tuned circuits are required. The PLL bandwidth is usually two to ten percent of the i-f for fm detection. Components R1-C1 set the VCO to near the desired frequency. C2 is the loop-filter capacitor which determines the capture range – that range of frequencies over which the loop will acquire lock with an input signal, initially starting

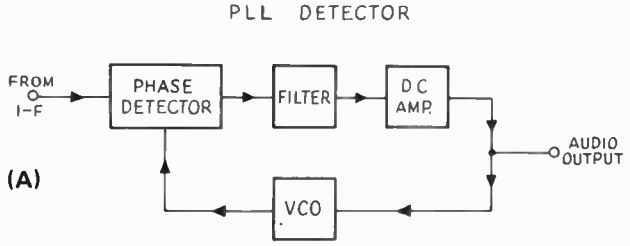

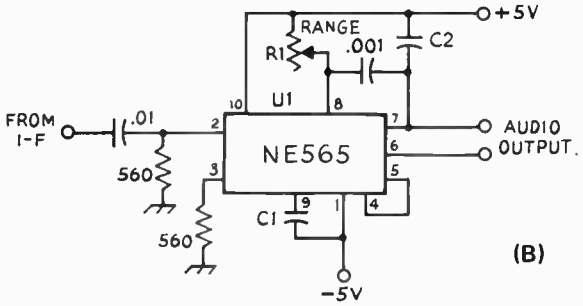

Fig. 14-19 — (A) Block diagram of a PLL demodulator. (B) Complete PLL circuit.

out of lock. The NE565 has an upper frequency limit of 500 kHz; for higher frequencies, the NE561, which is usable up to 30 MHz, can be employed.

FM RECEIVING ADAPTERS

To put the older tube receivers such as the 75A, HRO and Super Pro models into fm service, the receiving adapter shown in Fig. 14-21 was designed. Filament and plus B voltages are taken from the companion receiver. Obviously, the better the basic receiver, the better will be the performance of the fm receiving system. For this application sets with high-gain i-f amplifier sections and a broad-band selectivity position (such as the SP-400, SP-600, SX-73, and R-390) are excellent choices. Receivers that have only a 6-kHz or narrower bandwidth may need an extra i-f amplifier stage in the fm adapter in order to tap the receiver i-f at the output of the second mixer. Of course, a converter will also be required with the basic receiver if copy of vhf fm signals is desired.

A sample of the receiver i-f signal is passed to T1, a 455-kHz i-f transformer, which feeds amplifier/limiter V1. A low screen voltage and signal bias enhance the limiting characteristic of the tube. Further "hard" limiting action is provided by the two sections of V2, a 12AT7. A sample of the grid current of V2A is available at TP1, a test point used during alignment. A commercially made discriminator transformer converts the fm signal to a-m; the a-m is detected by CR1 and CR2. An *RC* de-emphasis network is included to match the standard pre-emphasis used on fm transmitters. Audio amplification is provided by V3 – in some receivers with high-gain audio systems this stage may not be necessary.

The adapter is constructed on an aluminum channel which is 11 inches long, 2 inches wide, and 1 3/4 inches high. A 1/4-inch lip is included on one side as a mounting foot. A Minibox or a standard chassis is also suitable as a base. The layout of the stages should be kept in a straight line so that rf feedback paths can be avoided. Point-to-point wiring is used throughout.

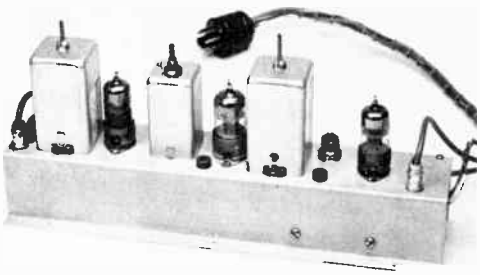

Fig. 14-20 – The fm adapter, wired for connection to a Collins 75A2.

Alignment

"Lining up" the adapter takes time and test equipment. A VTVM or microammeter plus a signal generator are required. Good alignment cannot be accomplished by ear; if the necessary test instruments aren't available, they should be borrowed.

To start, check the alignment of the communications receiver, following the manufacturer's instructions, to be sure that the rf and i-f stages are "peaked" before the fm adapter is installed. Two simple internal modifications are required in the receiver, as shown in Fig. 14-21 B and C. If the receiver has a wide i-f bandwidth, a sample of the i-f signal can be taken from the plate of the last i-f stage. Otherwise, the tap should be made at the plate of the first i-f amplifier, and an extra stage, a duplicate of V1, included in the adapter. Short lengths of shielded cable are used to carry the i-f signal to the adapter and to return audio to the receiver – see Fig. 14-21C. Some units (75A2, HRO-50) which have provision for fm adapters already have a front-panel switch wired for this purpose.

Connect the signal generator to the receiver, and set the generator to produce an S9 reading on the receiver signal-strength meter. The receiver crystal filter should be switched to its most selective position to insure that the incoming signal is being heterodyned to exactly 455 kHz. Then, with a voltmeter or microammeter connected to TP1, adjust both sections of T1, and L1, for maximum limiter current. The receiver i-f stage being "tapped" should also be realigned to compensate for the capacitance of the adapter cable.

To align the discriminator, set the receiver selectivity at the broad position, and connect the voltmeter to TP2. Voltage at this test point will swing both plus and minus, so a zero-center meter or VTVM with a lead-reversing switch should be employed. Set the secondary of the discriminator transformer for a zero-voltage indication on the meter. Then vary the signal-generator frequency plus or minus 15 kHz. Going off center frequency in one direction will produce positive voltage at TP2, while going in the other direction generates negative voltage. The primary of the transformer must be set so that, for example, if a shift down in frequency by 5 kHz produces plus 2 volts, then a change of 5 kHz in the other direction should produce minus 2 volts. Unfortunately, the two adjustments on the discriminator transformer are interlocking, so considerable experimentation is required. Also, the tuning of the preceding stages, if not centered on 455 kHz, will affect the discriminator linearity. The first time around, a half hour or more of alignment and realignment is usually required to achieve *equal* swings in output voltage for *equal* swings in frequency – a linear response.

One further check of the discriminator is required. An impulse-generating device, such as an electric shaver, should be switched on, and the receiver, set for a-m detection, tuned to point in the spectrum where the noise is strong. Then,

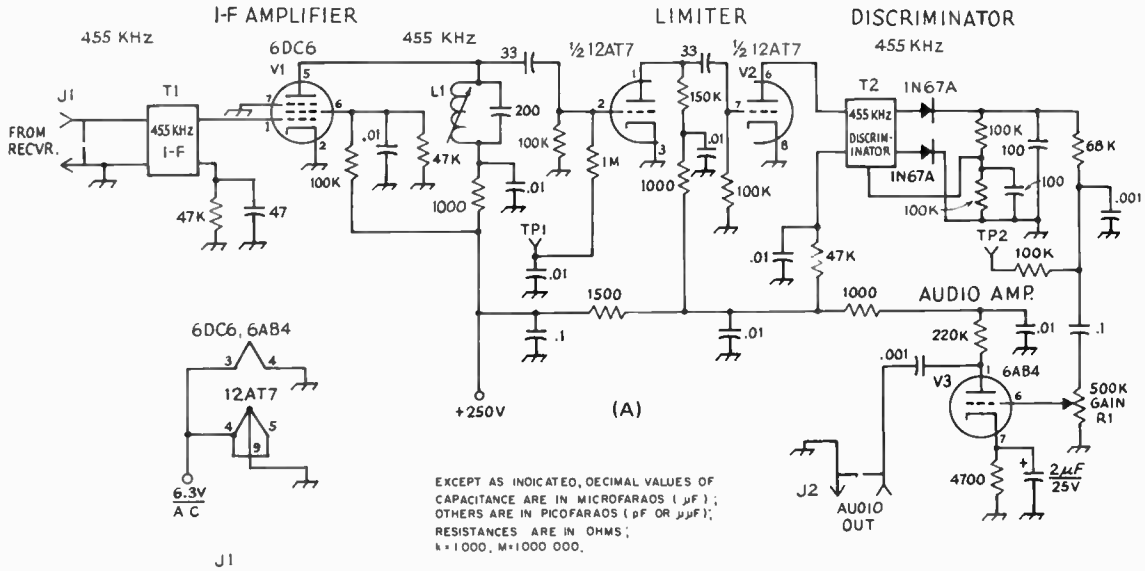

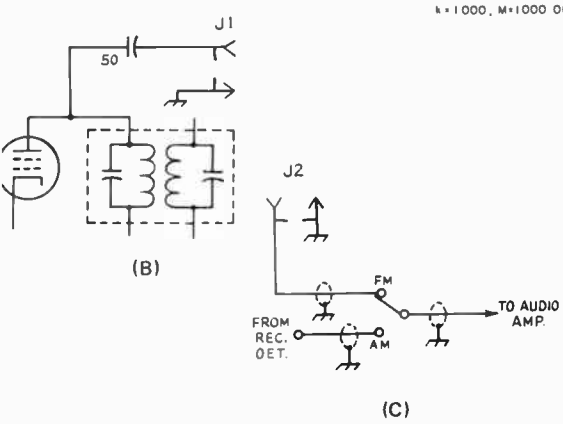

Fig. 14-21 — (A) Schematic diagram of the 455-kHz fm adapter. Resistors are 1/2-watt composition; capacitors are disk ceramic, except those with polarity marked, which are electrolytic.
J1, J2 — Phono jack, panel mount.
L1 — 430-850-μH slug-tuned variable inductor (Miller 42A684CBI).
R1 — Audio-taper composition control.
T1 — I-f transformer, 455 kHz (Miller 913-C1).
T2 — Discriminator transformer, 455 kHz (Miller 913-CD).
TP1, TP2 — Tip jack (Johnson 105-XX).
(B) Diagram of the connections to use the fm adapter with a communications receiver. The tap to the i-f stage is through a 50-pF disk-ceramic capacitor. If the receiver has a wide-band i-f system, the connection should be made to the last intermediate-frequency amplifier; for narrow i-fs, tap the first i-f stage. (C) Audio connections.

switch to the fm adapter and adjust the discriminator transformer for best suppression of the noise pulses. If the alignment with the signal generator has been completed properly, only a half a turn or so of the slugs will be needed to complete the phase tuning of the discriminator.

A SOLID-STATE ADAPTER

Tubes are seldom used in current designs. For those builders who prefer to be "up with the times," a solid-state version of the 455-kHz adapter was constructed. Using IC limiter/amplifier, and miniature i-f transformers, the unit requires only 25 mA at 12 V for power. See Fig. 14-24A. The Motorola MC1590G provides 70 dB gain, and hard limiting action superior to that obtained with the tube version.

The unit is built on a 2 X 6 1/2-inch circuit board; a template is given in Fig. 14-24B. Because of the high gain of the IC stage, a shield is required across pins 4 and 6 to isolate the input from the output. Alignment and installation are the same as for the tube version. The bandwidth of the miniature transformers restricts this adapter to narrow-band reception. However, builders wishing a wideband version can use the J. W. Miller 8811 miniature coils which are combined with a 12-pF coupling capacitor to form a wide-band transformer.

FM COMMUNICATIONS

Although information on fm theory and construction has been available to the amateur for a number of years, this mode has been largely neglected. But now large quantities of used commercial fm mobile equipment have become available for amateur use, creating new interest. Originally designed to cover frequency ranges adjacent to amateur bands, this equipment is easily retuned for amateur use.

One feature of fm is its noise-suppression capability. For signals above the receiver threshold, wideband fm has a signal-to-noise ratio advantage over a-m as a result of its greater "intelligence bandwidth." This same increased bandwidth, however, results in a much more abrupt signal threshold effect, causing weak signals to suddenly disappear. The generality can be made that a-m has

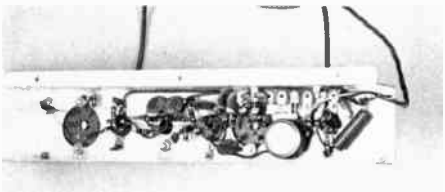

Fig. 14-22 — In this bottom view, the input transformer is to the left, followed by the i-f amplifier, limiter and detector. On the far right are the audio amplifier stage and gain control.

Fig. 14-23 — The solid-state fm adapter is constructed on a 6 X 2-inch etched-circuit board, mounted on a homemade chassis.

a greater range in weak signal work but that wideband fm will provide greater noise suppression in local work. However, in practice, vhf fm mobiles experience greater range than previously found on a-m due to the output powers employed which are considerably higher than those common on a-m.

Operating Practices

Amateur fm practice has been to retain the fixed-frequency channelized capability of the commercial equipment. VFOs and tunable receivers have not proven satisfactory due to the requirement for precise frequency netting. An off-frequency signal will be received with distortion and will not have full noise rejection. Channelized operation with squelched receivers permits continuous monitoring of the active frequencies. Long, time-consuming calls and CQs are not necessary (or appreciated) to establish communications, as all receivers on the channel "come alive" with the operator's first word. Natural, short transmissions are usually encour-

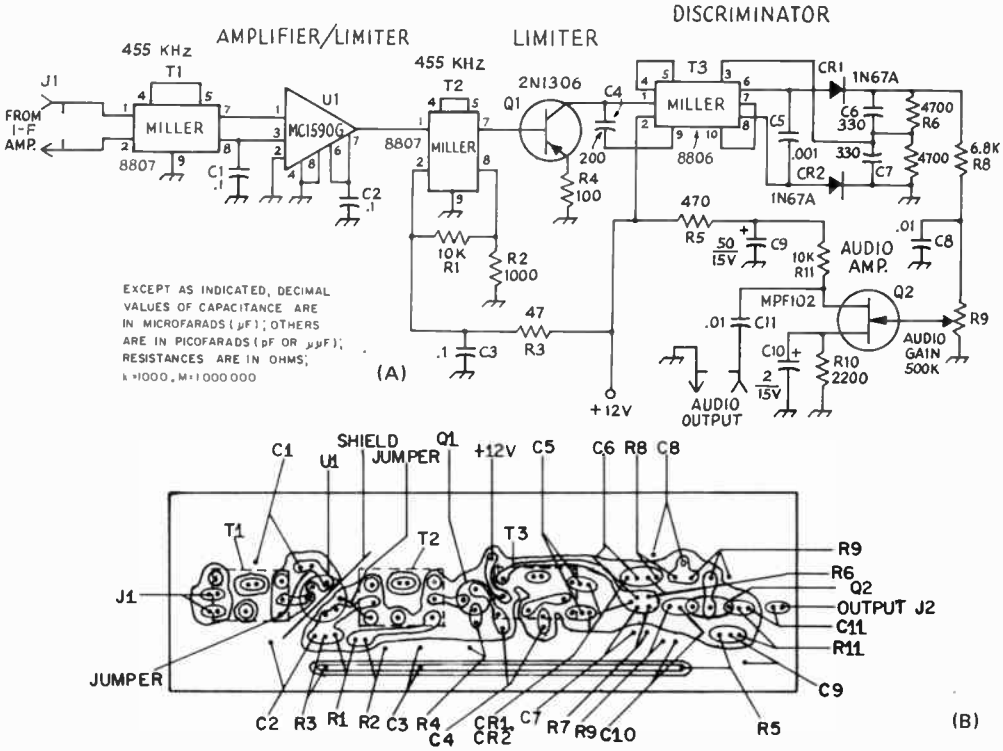

Fig. 14-24 — (A) Diagram of the 455-kHz narrow-band adapter. Resistors are 1/4- or 1/2-watt composition and capacitors are disk ceramic, except those with polarity marked, which are electrolytic. Components with reference numbers that are not listed below are noted for circuit-board location.
J1, J2 — Phono receptacle, panel mount.
R1 — Miniature 1/2-watt composition control.
T1 — Miniature 455-kHz i-f transformer (Miller 8807).
T2 — Miniature discriminator transformer, 455 kHz (Miller 8806).
U1 — Motorola MC1590G.
(B) Template for the solid-stage adapter (not to scale).

aged. The old monopoly switch routine, where the operator gabs to himself for 10 minutes at a time, will get him invited off a busy fm channel. Some channels are calling channels on which extended ragchewing is discouraged, whereas other channels, or the same channel in another area, may be alive with chatter. This is a matter of local determination, influenced by the amount of activity, and should be respected by the new operators and the transient mobile operator alike. Some groups have adopted the use of the "10 code" which was originated for law enforcement communications. However, plain language in most cases is as fast and requires no clarification or explanation to anyone.

Fig. 14-25 — A homemade fm transceiver. The transmitter section uses the solid-state exciter and amplifier shown in Chapter 10.

Standards

Standard channel frequencies have been agreed upon to permit orderly growth and to permit communications from one area to another. On two meters, it has been agreed that any frequency used will fall on increments of 60 kHz, beginning at 146.04 MHz. 146.94 MHz (or "nine-four") is the national calling frequency. On six meters, the national calling frequency is 52.525 MHz, with other channels having a 40-kHz spacing beginning at 52.56 MHz. Ten-meter fm activity can be found on 29.6 MHz. Recommendations for 10 meters and 220 MHz are for 40 kHz channel spacing starting at 29.04 and 220.02 MHz. Usage of the 420-MHz band varies from area to area, as it is used for control channels, repeaters, and remote bases, as will be discussed later. In the absence of any other local standard, usage should begin at 449.95 MHz and proceed downward in 50-kHz increments.

Two deviation standards are commonly found. The older standard, "wide band," calls for a maximum deviation of 15 kHz. The newer standard, "narrow band," imposed on commercial users by the splitting of their assigned channels, is 5 kHz. The deviation to be employed by amateurs on frequencies where fm is permitted is not limited to a specific value by the FCC, but it is limited by the bandpass filters in the fm receivers. In general, a receiver with a filter for 5-kHz deviation will not intelligibly copy a signal with 15-kHz deviation. In some areas, a compromise deviation of 7 or 8 kHz is used with some success with both wide and narrow receivers. When necessary, receiver filters can be exchanged to change the bandpass.

REPEATERS

A repeater is a device which retransmits received signals in order to provide improved communications range and coverage. This communications enhancement is possible because the repeater can be located at an elevated site which has coverage that is superior to that obtained by most stations. A major improvement is usually found when a repeater is used between vhf mobile stations, which normally are severely limited by their low antenna heights and resulting short communications range. This is especially true where rough terrain exists.

The simplest repeater consists of a receiver with its audio output directly connected to the audio input of an associated transmitter tuned to a second frequency. In this way, everything received on the first frequency is retransmitted on the second frequency. But, certain additional features are required to produce a workable repeater. These are shown in Fig. 14-28A. The "COR" or carrier-operated relay is a device connected to the receiver squelch circuit which provides a relay contact closure to key the transmitter when an input signal of adequate strength is present. As all amateur transmissions require a licensed operator to control the emissions, a "control" switch is provided in the keying path so that the operator may exercise his duties. This repeater, as shown, is

Fig. 14-26 — This typical 144-MHz amateur repeater uses GE Progress-Line transmitter and receiver decks. Power supplies and metering circuits have been added. The receiver located on the middle deck is a 440-MHz control receiver, also a surplus GE unit. A preamplifier, similar to that shown in Fig. 14-44, has been added to the 2-meter receiver to improve the sensitivity so that 0.2 μV of input signal will produce 20 dB quieting.

FM JARGON (Fig. 14-27)

Duplex – Simultaneous transmissions between two stations using two frequencies.
Simplex – Alternating transmission between two or more stations using one frequency.
Low band – 30 to 50 MHz. Also, the six-meter amateur band.
High band – 148 to 174 MHz. Also, the two-meter amateur band.
Remote base – A remotely controlled station, usually simplex (see text).
Machine – Either a repeater or a remote base. Also called a "box."
Vault – Building that houses the machine.
COR – Carrier-operated relay (see text).
CTCSS – Continuous tone-controlled squelch system. Continuous subaudible tone (250 Hz or lower) transmitted along with the audio to allow actuation of a repeater or receiver only by transmitters so equipped. More frequently referred to by various trade names such as Private Line, Channel Guard, and Quiet Channel.
Down channel – Communications circuit from the machine to the control point.
Up channel – Communications and/or control circuit from the control point to the machine.
Open repeater – A machine where transient Operators are welcome.
Closed repeater – A machine where use by non-members is not encouraged. (When heavy expenditures are involved, free-Loaders are not popular.)

suitable for installation where an operator is present, such as the home of a local amateur with a superior location, and would require no special licensing under existing rules.

In the case of a repeater located where no licensed operator is available, a special license for remote control operation must be obtained and provisions made to control the equipment over a telephone line or a radio circuit on 220 MHz or higher. The licensed operator must then be on hand at an authorized control point. Fig. 14-28B shows the simplest system of this type. The control decoder may be variously designed to respond to simple audio tones, dial pulsed tones, or even "Touch-Tone" signals. If a leased telephone line with dc continuity is used, control voltages may be sent directly, requiring no decoder. A 3-minute timer to disable the repeater transmitter is provided for fail-safe operation. This timer resets during pauses between transmissions and does not interfere with normal communications. The system just outlined is suitable where all operation is to be through the repeater and where the frequencies to be used have no other activity.

Remote Base Stations

The remote base, like the repeater, utilizes a superior location for transmission and reception, but is basically a simplex device. That is, it transmits and receives on a single frequency in order to communicate with other stations also operating on that frequency. The operator of the remote base listens to his hilltop receiver and keys his hilltop transmitter over his 220-MHz or higher control channels (or telephone line). Fig. 14-29A shows such a system. Control and keying features have been omitted for clarity. In some areas of high activity, repeaters have all but disappeared in favor of remote bases due to the interference to simplex activity caused by repeaters unable to monitor their output frequency from the transmitter location.

Complete System

Fig. 14-29B shows a repeater that combines the best features of the simple repeater and the remote base. Again, necessary control and keying features have not been shown in order to simplify the drawing, and make it easier to follow. This repeater is compatible with simplex operation on the output frequency because the operator in control monitors the output frequency from a receiver at the repeater site between transmissions. The control operator may also operate the system as a remote base. This type of system is almost mandatory for operation on one of the national calling frequencies, such as 146.94 MHz, because it minimizes interference to simplex operation and permits simplex communications through the system with passing mobiles who may not have facilities for the repeater-input frequency.

The audio interface between the repeater receivers and transmitters can, with some equipment, consist of a direct connection bridging the transmitter microphone inputs across the receiver speaker outputs. This is not recommended, however, due to the degradation of the audio quality in the receiver-output stages. A cathode

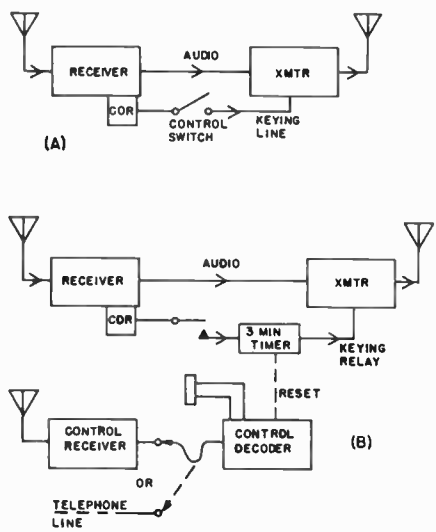

Fig. 14-28 – Simple repeaters. The system at A is for local control. Remote control is shown at B.

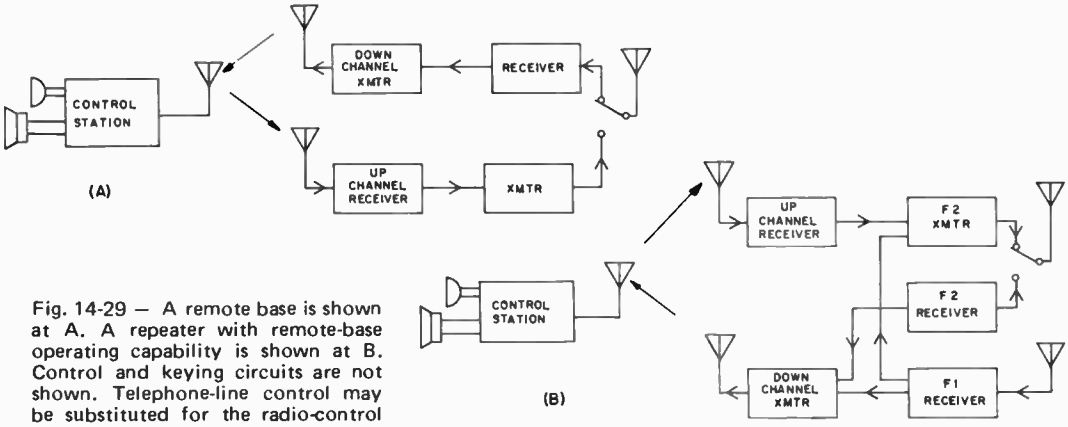

Fig. 14-29 — A remote base is shown at A. A repeater with remote-base operating capability is shown at B. Control and keying circuits are not shown. Telephone-line control may be substituted for the radio-control channels shown.

follower connected to each receiver's first squelch-controlled audio amplifier stage provides the best results. A repeater should maintain a flat response across its audio passband to maintain the repeater intelligibility at the same level as direct transmissions. There should be no noticeable difference between repeated and direct transmissions. The intelligibility of some repeaters suffers because of improper level settings which cause excessive clipping distortion. The clipper in the repeater transmitter should be set for the maximum system deviation, for example, 10 kHz. Then the receiver level driving the transmitter should be set by applying an input signal of known deviation below the maximum, such as 5 kHz, and adjusting the receiver audio gain to produce the same deviation at the repeater output. Signals will then be repeated linearly up to the maximum desired deviation. The only incoming signal that should be clipped in a properly adjusted repeater is an overdeviated signal.

The choice of repeater input and output frequencies must be carefully made. On two meters, 600-kHz spacing between the input and output frequencies is common. Closer spacing makes possible interference problems between the repeater transmitter and receiver more severe. Greater spacing is not recommended if the user's transmitters must be switched between the two frequencies, as happens when the output frequency is also used for simplex operation, either for short-range communications, or to maintain communications when the repeater is not functioning. A 5-MHz spacing is recommended on 440 MHz.

Careful consideration of other activity in the area should be made to prevent interference to or from the repeater. Many "open" or general-use repeaters have been installed on one of the national calling frequencies. On two meters, a 146.94 MHz output is usually paired with a 146.34-MHz input, and many travelers have made good use of this combination where it is found. Where 146.94-MHz simplex activity has not permitted a repeater on this frequency, 146.76 MHz has been used as an alternative. On six meters, several choices of input frequencies have been paired with 52.525 MHz. The choice and usage is a matter for local agreement.

In some cases where there is overlapping geographical coverage of repeaters using the same frequencies, special methods for selecting the desired repeater have been employed. One of the most common techniques requires the user to transmit automatically a 0.5-second burst of a specific audio tone at the start of each transmission. Different tones are used to select different repeaters. Standard tone frequencies are 1800, 1950, 2100, 2250, and 2400 Hz.

PRACTICAL REPEATER CIRCUITS

Because of their proven reliability, commercially made transmitter and receiver decks are generally used in repeater installations. Units designed for repeater or duplex service are preferred because they have the extra shielding and filtering necessary to hold mutual interference to a minimum when both the receiver and transmitter are operated simultaneously.

Wideband noise produced by the transmitter is a major factor in the design of any repeater. The use of high-Q tuned circuits between each stage of the transmitter, plus shielding and filtering throughout the repeater installation, will hold the wideband noise to approximately 80 dB below the output carrier. However, this is not sufficient to prevent desensitization — the reduction in sensitivity of the receiver caused by noise or rf overload from the nearby transmitter — if the antennas for the two units are placed physically close together.

Desensitization can easily be checked by monitoring the limiter current of the receiver with the transmitter switched off, then on. If the limiter current increases when the transmitter is turned on, then the problem is present. Only physical isolation of the antennas or the use of high-Q tuned cavities in the transmitter and receiver feeders will improve the situation.

Antenna Considerations

The ultimate answer to the problem of receiver desensing is to locate the repeater transmitter a

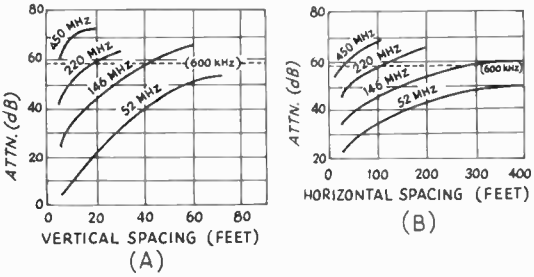

Fig. 14-30 — Charts to calculate the amount of isolation achieved by (A) vertical and (B) horizontal spacing of repeater antennas. If 600-kHz separation between the transmitted and received frequencies is used, approximately 58-dB attenuation (indicated by the dotted line) will be needed.

mile or more away from the receiver. The two can be interconnected by telephone line or uhf link. Another effective approach is to use a single antenna with a duplexer, a device that provides up to 120 dB of isolation between the transmitter and receiver. High-*Q* cavities in the duplexer prevent transmitted signal energy and wideband noise from degrading the sensitivity of the receiver, even though the transmitter and receiver are operating on a single antenna simultaneously. A commercially made duplexer is very expensive, and constructing a unit requires extensive metal-working equipment and test facilities.

If two antennas are used at a single site, there will be a minimum spacing of the two antennas required to prevent desensing. Fig. 14-30 indicates the spacing necessary for repeaters operating in the 50-, 144- and 420-MHz bands. An examination of 14-30 will show that vertical spacing is far more effective than is horizontal separation. The chart assumes unity-gain antennas will be used. If some type of gain antenna is employed, the pattern of the antennas will be a modifying factor. A rugged repeater antenna was described in *QST* for January, 1970.

Control

Two connections are needed between the repeater receiver and transmitter, audio and transmitter control. The audio should be fed through an impedance-matching network to insure that the receiver output circuit has a constant load while the transmitter receives the proper input impedance. Filters limiting the audio response to the 300- to 3000-Hz band are desirable, and with some gear an audio-compensation network may be required. A typical COR (carrier-operated relay) circuit is shown in Fig. 14-31A. This unit may be operated by the grid current of a tube limiter or the dc output of the noise detector in a solid-state receiver.

Normally a repeater is given a "tail"; a timer holds the repeater transmitter on for a few seconds after the input signal disappears. This delay prevents the repeater from being keyed on and off by a rapidly fading signal. Other timers keep each transmission to less than three minutes duration (an FCC requirement), turn on identification, and control logging functions. A simple timer circuit is shown in Fig. 14-31B. A unijunction transistor sets the timing cycle while a silicon-controlled rectifier activates the control relay. If desired, an all-solid-state control system can be constructed using a flip-flop IC in place of the relay.

Logging and Identification

Current FCC rules require that a log be kept of repeater operations, just as with any other licensed amateur station. The most effective method of logging has proven to be a tape recorder equipped with a 10- to 20-second timer. The recorder is turned on for a short time (set by the timer) at the beginning of each series of transmissions, so that the calls of using stations may be recorded. In some systems the time must be given by the user, while on others time signals from WWV or CHU are recorded simultaneously on a second track of the tape.

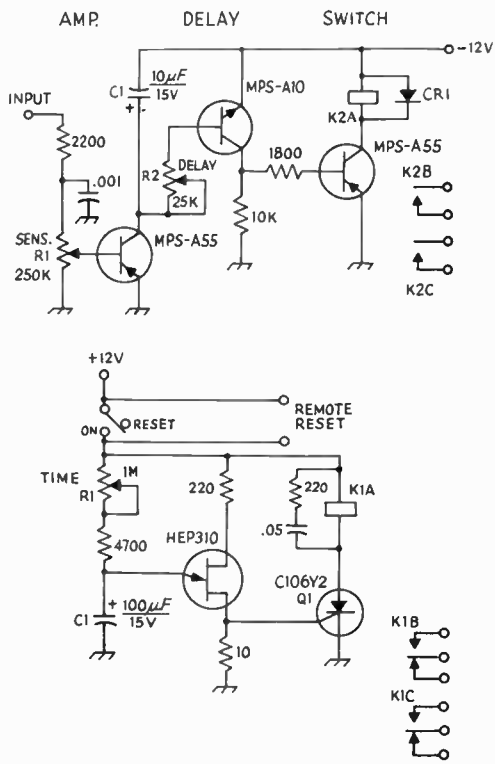

Fig. 14-31 — (A) COR circuit for repeater use. R2 sets the length of time that K1 will stay closed after the input voltage dissappears. K1 may be any relay with a 12-volt coil, although the long-life reed type is preferred. CR1 is a silicon diode. (B) Timer circuit. C1 should be a low-leakage capacitor; CR1 is a General Electric silicon-controlled rectifier, type C106B. K2 may be any miniature relay with a 12-volt coil. Reset of the timer is accomplished by interrupting the supply voltage momentarily.

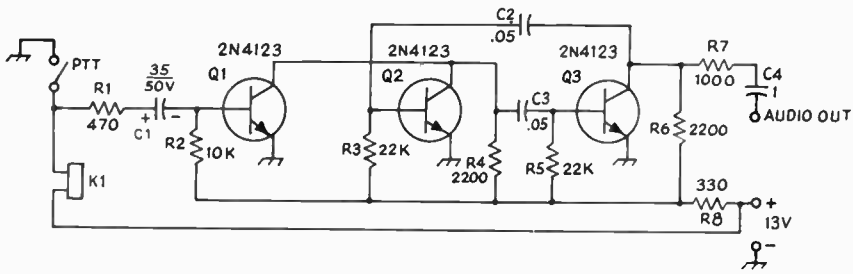

Fig. 14-32 — (A) Schematic diagram of the "electronic whistle." The main diagram is for high-impedance output. The lower portion has an emitter-follower added, for use with transmitters having low-impedance speech input circuits. All values of capacitance are in μF; polarity indicates electrolytic. (B) Tone-burst decoder. Resistors are 1/2-watt composition and capacitors are mylar. K1 is an spst reed relay with a 6-volt coil (C. P. Clare PRA-2010).

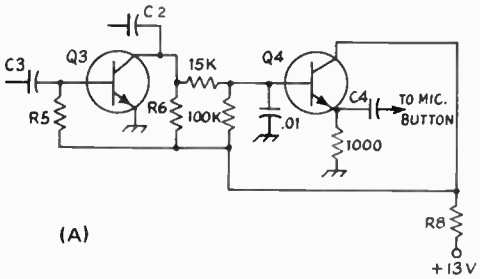

(A)

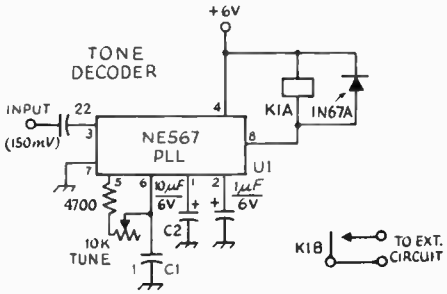

(B)

Identification of the repeater itself may be done by users, but lest a forgetful operator leave the repeater unknown, some form of automatic ID is preferred; A tape deck with a short loop tape for voice ID or a digital cw generator has proven to be effective. A suitable solid-state cw generator was described in *QST* for June, 1970.

Many repeaters use a form of tone control so that a carrier on the input frequency will not inadvertently key the transmitter. The most popular form of tone control is known as tone burst, often called whistle on because an operator with a good ear for frequency can use a short whistle instead of an electronically generated tone to key the repeater. A better approach, however, is a simple transistor tone generator, such as shown in Fig. 14-32A.

The whistle-on device was built for use with a Motorola 30-D transmitter, on a 1 1/2 X 2 1/2-inch piece of Vectorbord. It is nothing more than an astable multivibrator, triggered by a one-shot. When the push-to-talk switch is closed, actuating the transmitter relay, K1, Q1 goes from saturation to cutoff, and the multivibrator, Q2-Q3, begins oscillating with a period dependent on the values of R3, R5, C2 and C3. Values given result in a "whistle" of roughly 650 Hz.

Low Tone (Hz)	*High Tone* 1209 Hz	1336 Hz	1447 Hz
697	1	2	3
770	4	5	6
852	7	8	9
941	#	0	*

Fig. 14-33 — Standard Touch-Tone frequencies for the 12-digit pad.

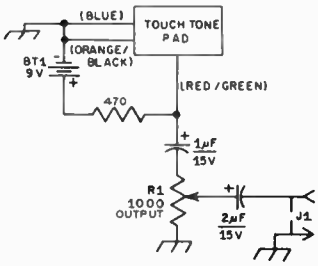

Fig. 14-34 — Typical connections to use a Touch-Tone pad for repeater control. Resistances are in ohms. R1 is a linear-taper composition control and J1 is a panel-mounted phono jack. Capacitors are electrolytic; color coding on the wire leads from the pad is shown in parentheses.

Oscillation ceases when Q1 turns on again. This is regulated by the values of R2 and C1, and is roughly 0.25 second with the values shown. The 470-ohm resistor, R1, protects the base of Q1 from current surges when the PTT is released.

The lower right portion of Fig. 14-32A shows an emitter-follower added, for use with transmitters employing carbon microphones. The value of C4 can be adjusted to give the appropriate output level.

Most of the component values are not critical, except the *RC* products which determine timing. Since the frequency is low, almost any bipolar transistors can be used. Npn types are shown, but pnp will work with opposite voltage polarity. The beta rating should be at least twice R3/R4, to insure saturation.

Most narrow-bandwidth tone decoders currently used in amateur repeater and remote-station applications employ several bulky *LC* circuits to achieve the required audio selectivity. The phase-locked loop (PLL) ICs, pioneered by Signetics, have simplified the design and reduced the size of tone decoders so that a complete Touch-Tone demodulator can be built on a 3 X 5 1/2-inch etched circuit board (about the size for a single-tone decoder using *LC* components).

A typical PLL single-tone decoder, such as might be employed for tone-burst entry control at a repeater, is shown in Fig. 14-32B. One *RC* network establishes the frequency to which the PLL is tuned, according to the relationship:

$$frequency = \frac{1}{R1C1}$$

The PLL, a Signetics NE567, may be operated from 0.1 Hz to 500 kHz. C2 establishes the bandwidth of the decoder, which can be set between one and fourteen percent of the operating frequency. C3 smooths the output signal, and, when this capacitor is made a high value, provides a delay in the turn-on function when a tone is received. Up to 100 mA may be drawn by the '567 output circuit, enough to key a relay directly or to drive TTL logic. The PLL contains 62 transistors.

Autopatch and Touch Tone

Some repeater groups have provided an interconnection to the public telephone network through a device called an autopatch. Details on all phases of phone patching are contained in Chapter 15. Such interconnection has led to the widespread use of the telephone company's Touch Tone system of tone signaling for repeater control functions, as well as telephone dialing. Because all of the Touch Tone frequencies are within the voice band, they can be transmitted by any amateur voice transmitter.

The Touch Tone control system consists of pairs of tones (see Fig. 14-33) for each of 10 numbers and the two special functions. One tone from the high-frequency group is generated simultaneously with one tone from the low-frequency group to represent each number or function. The Touch Tone generator pad from a standard telephone instrument is usually employed. See Fig. 14-34 for connections. A simple Touch Tone decoder using ICs throughout was described in July 1971 *QST*.

A LOW-POWER TRANSMITTER FOR 29.6 MHZ FM

The transmitter shown in Fig. 14-36 has been designed to produce wide- or narrow-band fm in the 10-meter band. Power output is about 6 watts, yet only three tubes are used. The unit is suitable for fixed-station or mobile use.

Circuits

Two section, V1A and V1B, of a triple-triode Compactron tube are used as audio voltage amplifiers. The high-impedance audio input circuit is suitable for dynamic, crystal or ceramic microphones. After voltage amplification the audio signal is passed through a full-wave clipper, which consists of CR1, CR2 and associated resistors. Use of the audio clipper will insure that peak fm deviation does not exceed a preset amount. The output of the clipper is filtered in a pi-section to remove high-order audio harmonics generated during the clipping process.

The audio signal is applied to a varactor diode, CR3, producing a capacitive change. This variation in capacitance shifts the frequency of the 7.4-MHz oscillator, V2A, in a manner proportional to the modulating signal. The frequency of the fm energy thus produced is doubled in the plate circuit of the oscillator, and then doubled again by the second section of V2, delivering output in the 10-meter band. V3, a 6GK6 tube, amplifies the signal,

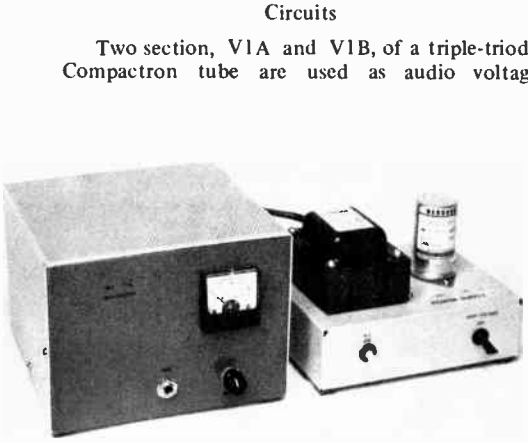

Fig. 14-35 — The front view of the 10-meter fm transmitter reveals only the plate-current meter, microphone-gain control and microphone jack.

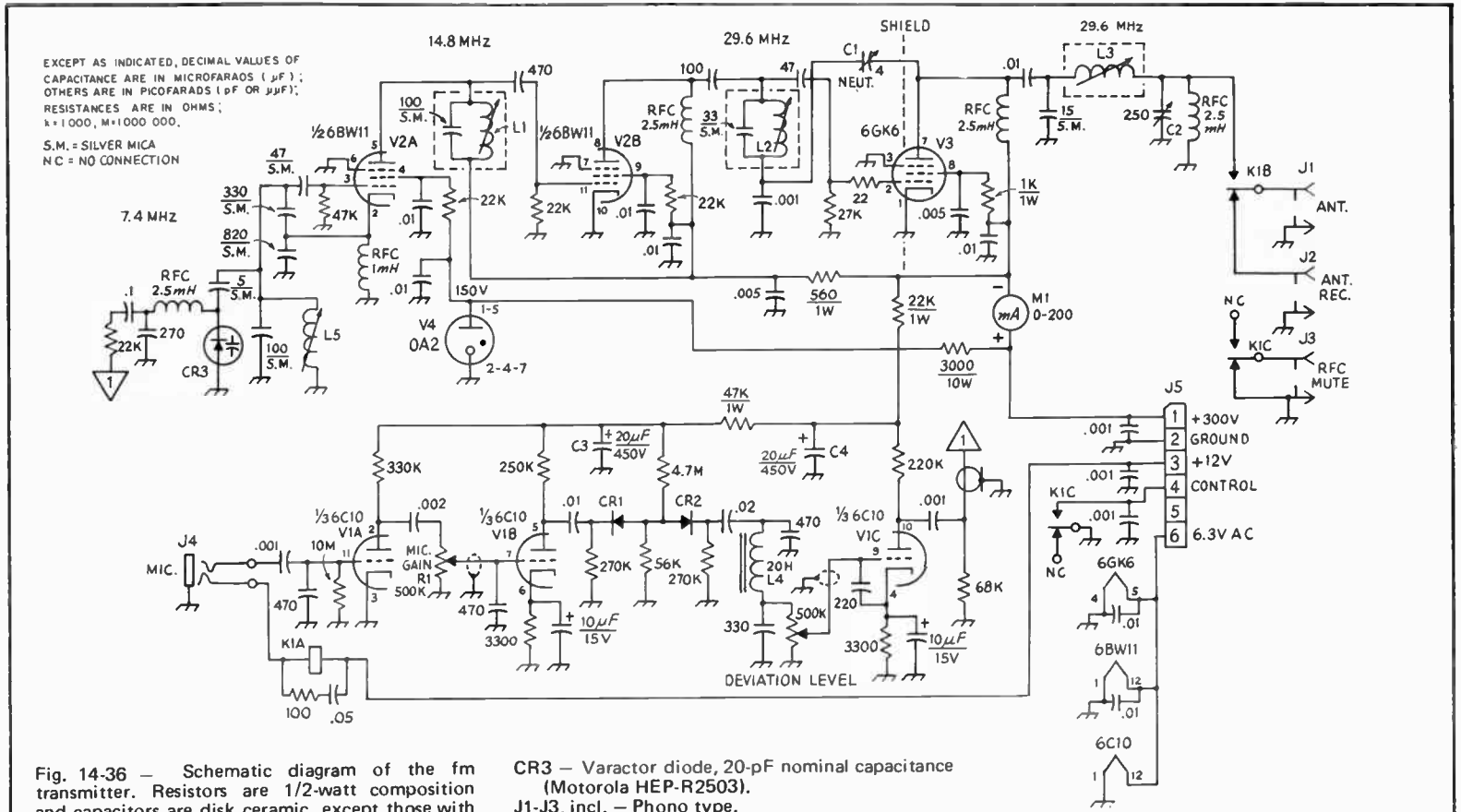

Fig. 14-36 — Schematic diagram of the fm transmitter. Resistors are 1/2-watt composition and capacitors are disk ceramic, except those with polarity marked which are electrolytic.

C1 — Miniature air variable (Johnson 189-501-5 or similar).
C2 — Mica-insulated padder (J. W. Miller 160-E or similar).
C3, C4 — Tubular electrolytic.
CR1, CR2 — 1N67A or similar germanium diode.
CR3 — Varactor diode, 20-pF nominal capacitance (Motorola HEP-R2503).
J1-J3, incl. — Phono type.
J4 — 3-circuit microphone jack.
K1 — 3 pdt relay, 3-A contacts, 12-volt coil (Potter and Brumfield KHP17D11).
L1, L5 — 1-1.87-μH slug-tuned coil (J. W. Miller 42A156CBI).
L2 — Approx. 0.9 μH slug-tuned coil, J. W. Miller 42A156CBI with 5 turns removed.
L3 — 1.35-2.75-μH slug-tuned coil (J. W. Miller 42A226CBI).
L4 — 20-H filter choke, 15 mA (Stancor C-1515 or similar).
M1 — Milliammeter (Simpson 06171).
R1 — Audio-taper composition control.
R2 — Linear-taper composition control.

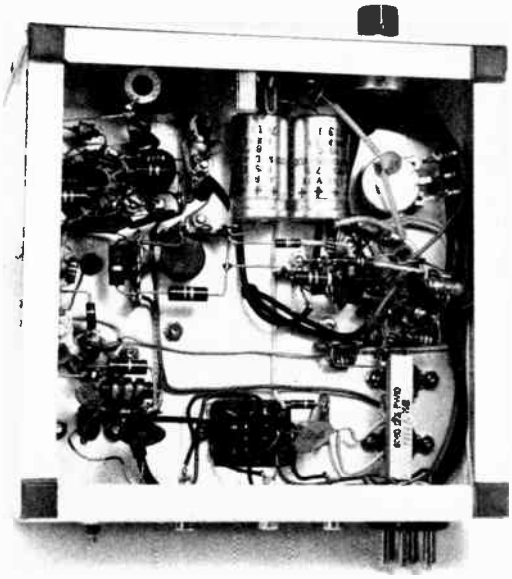

Fig. 14-37 — Bottom view of the transmitter. The audio components are grouped on the right-hand side of the chassis, while the exciter section runs from top to bottom along the left-hand chassis wall. All external connections are brought out to the rear-deck jacks, with the exception of the microphone connector which is located on the front panel.

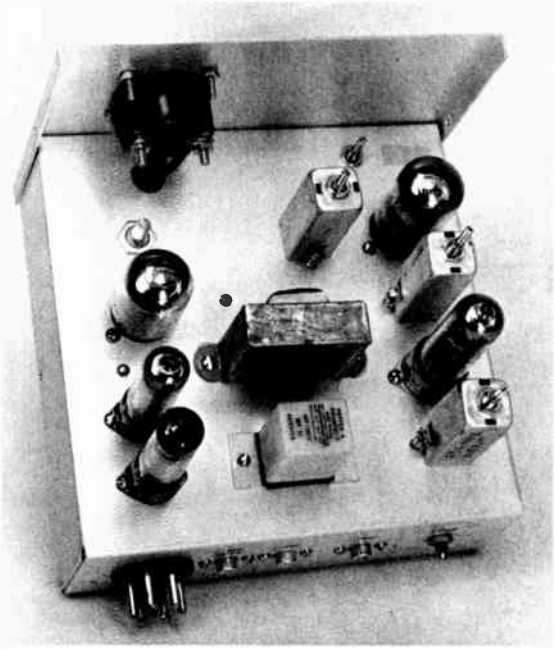

Fig. 14-38 — Either a single 0A2 or two 0A3 VR tubes may be used to regulate the screen voltage for the oscillator. In this model two regulators are used, the two tubes located at the lower-right side of the chassis. The control just below the meter is the DEVIATION adjustment.

running about 9-watts input power. A pi-section network couples the final amplifier to the antenna. Send-receive switching is accomplished by K1, which is activated by a PTT switch on the microphone.

Construction Details

The transmitter is built on a 7 X 7 X 2-inch chassis (Bud AC-405), using a 7 X 5-inch front panel. The plate-current meter, M1, is a useful tune-up accessory, but it may be replaced by a test jack in the interest of economy. After the initial adjustments have been accomplished, the rig will seldom need "touching up." The inexperienced builder should follow the general layout shown in the photographs. All tuned circuits except the oscillator are housed in shielded cans (J. W. Miller S-32). A shield isolating the input and output pins of the V3 socket is a good idea. Long audio leads should be run through shielded cable to prevent hum and rf pickup.

Tuning

The fm transmitter may be operated from an ac or mobile power supply. Suitable designs are given in Chapter 5. After checking the wiring for a second time for errors, apply filament power and allow the tubes to warm up. Then key K1 on, and check to see that the 0A2 (or two 0A3s) voltage-regulator tube is operating properly. Check the screen-voltage lead for the oscillator to see that it supplies 150 volts.

Use a 40-meter receiver to monitor the oscillator signal. With no audio applied, the oscillator should produce a clean carrier. Adjust L5 until the frequency of the oscillator is close to 7.4 MHz. A wavemeter, coupled to L1 and L2, should be employed to tune up the oscillator and doubler tank circuits, respectively. Insure that these tuned circuits are in fact resonated at the frequencies indicated on the diagram. Mistuning can result in spurious signals being radiated outside the amateur bands. Then, adjust L3 and C2 for maximum output power to a 50-ohm dummy load. An rf power bridge or Monimatch can be used to check the output level.

Erratic plate current readings usually indicate instability in the PA stage. If such a problem develops, disconnect the screen-voltage lead of the 6GK6. Couple a wavemeter to L3 and adjust the neutralizing capacitor, C1, for minimum rf energy at L3. Then, reconnect the screen lead.

With a test audio signal applied, the MIC. GAIN control should be advanced until clipping action starts (monitor the output of the clipper stage on an oscilloscope). Then, set the DEVIATION control for the desired amount of fm. Note: *FCC*

regulations require that the deviation of an amateur fm transmitter be held to 2.5 kHz or less below 29 MHz. Above 29 MHz larger amounts of deviation may be employed; 5 and 15 kHz are the current standards for the operation around 29.6 MHz. Methods of setting deviation are discussed earlier in this chapter. With the microphone connected, the MIC. GAIN control should be advanced until about 10 dB of speech clipping is produced, when speaking in a normal voice.

A RECEIVER FOR 10-METER FM

A block diagram of the 10-meter receiver is outlined in Fig. 14-40. The front-end circuit uses 40673 dual-gate MOSFETs for the rf amplifier and mixer. Toroid coils were chosen for the signal circuits because of their self-shielding properties. A crystal-controlled JFET oscillator provides injection voltage for Q2. Trimmer C3 is included to move the oscillator frequency "on channel."

A single-conversion scheme using a high i-f was chosen for simplicity, although having 120 dB of gain at 11.5 MHz requires careful layout and good bypassing techniques to insure stability. Three Motorola MC1590Gs are used, although two can achieve the required gain. Three stages, each with resistive loading, exhibited far better stability than two '1590s running "flat out."

The i-f amplifier circuit board uses extensive shielding. The finished product looks more like a piece of vhf gear than an i-f amp., but with high gain special precautions are necessary. The front end and i-f amplifier proved to be easy to build and adjust. The squelch circuit was a bother from the beginning. The basic circuit used for the noise-operated squelch is borrowed from the Motorola MOTRAC series. Output from the crystal discriminator proved to be quite a bit lower in level than would be obtained from an equivalent *LC* discriminator. Also, Z1 (Fig. 14-42) wants to "look into" an impedance of 100,000 ohms or more. The first version of the squelch circuit had far too little gain, so a redesign was required. The final version of the circuit is shown in Fig. 14-42. The voltages noted at the audio gate, Q8, are critical; any variation from the indicated values will cause a full squelch condition where the audio gate will not open, or, no squelch operation at all.

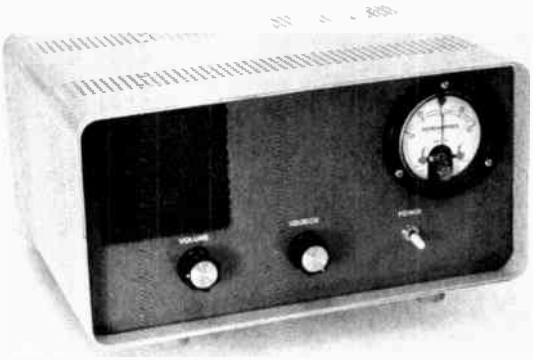

Fig. 14-39 — Front view of the complete receiver for 10-, 6-, or 2-meter fm. The unit is housed in an LMF 10 X 5 X 2-inch cabinet. Knobs are Kurz-Kasch S-748-1L.

A commercial amplifier module was chosen for the audio output section. It delivers two watts (rms) to an 8-ohm load when using a 12-volt supply. Sufficient audio output is available for comfortable copy of weak stations when operating mobile. An inexpensive imported 0.5-watt audio amplifier may be substituted if the receiver will be

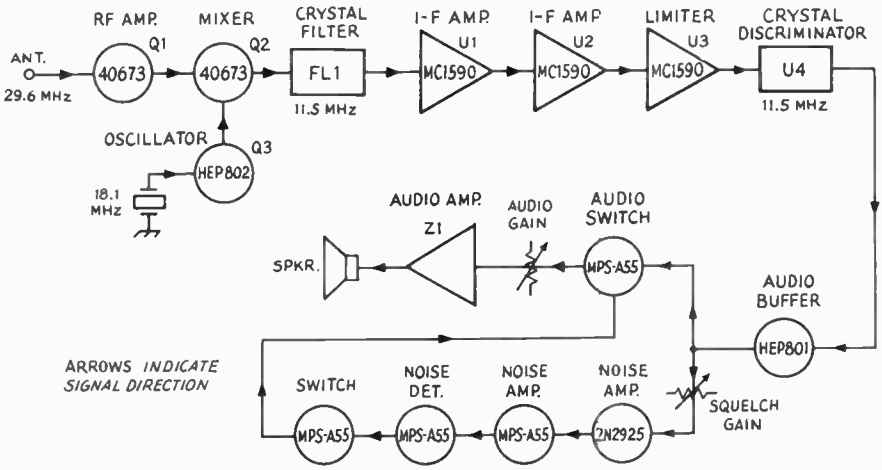

Fig. 14-40 — Block diagram of the 10-meter fm receiver using a crystal discriminator.

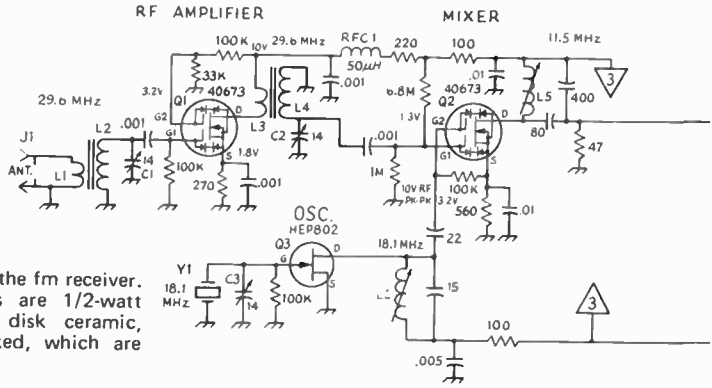

Fig. 14-42 — Schematic diagram of the fm receiver. Unless otherwise noted, resistors are 1/2-watt composition and capacitors are disk ceramic, except those with polarity marked, which are electrolytic.

C1-C6, incl. — Miniature air variable (Johnson 189-507-5).
C7 — Miniature air variable (Johnson 189-509-5).
C8-C10, incl. — Feedthrough type.
FL1 — For a wide-band 11.5-MHz i-f, ESEL MEL-3A; narrow-band 11.5-MHz i-f, ESEL DL-11A; wide-band 10.7-MHz i-f, KVG XF-107D; narrow-band 10.7-MHz i-f, KVG XF-107B. If 10.7-MHz i-f is used, add 15-pF ceramic capacitors across L5, L7, L9, L11 and L13. (See Fig. 14-11 for a complete list of filter choices and addresses of the filter manufacturers).
J1, J2 — Phone type, panel mount.
L1 — 5 turns No. 22 enam. over L2 for 29 MHz; use 2 turns for 52 MHz.
L2 — 21 turns No. 22 enam. on Amidon T-50-6 toroid core (yellow code) for 29 MHz; use 11 turns for 52 MHz (Amidon Associates, 12033 Otsego St., North Hollywood, CA 91607).
L3 — 8 turns No. 22 enam. on L4 for 29 MHz; use 4 turns for 52 MHz.
L4 — 13 turns No. 22 enam. on Amidon T-50-6 (yellow code) for 29 MHz; use 6 turns for 52 MHz.
L5 — 2.96-3.14-μH variable inductor (J. W. Miller 46A336CPC).
L6 — For 18-MHz crystals (10-meter operation), 1.99-2.42-μH variable inductor (J. W. Miller 46A226CPC); for 41-MHz crystals (6-meter operation) 0.37 to 0.47-μH variable inductor (J. W. Miller 46A397CPC).
L7, L9, L11 — 36 turns No. 26 enam. on Amidon T-50-2 (red code) core.
L8, L10, L12 — 16 turns No. 26 enam. over L7, L9 and L11, respectiviely.
L13 — 24 turns No. 22 enam. on Amidon T-50-2 (red code) core.
L14 — 88-mH surplus telephone loading coil.
Q1, Q2 — RCA dual-gate MOSFET.
Q3 — Motorola rf JFET.
Q4 — Motorola audio JFET.
Q5 — GE audio bipolar.
Q6-Q9, incl. — Motorola audio bipolar.
R1 — Linear-taper composition control.
RFC1 — 50-μH miniature choke (Millen 34300).
RFC2-RFC7, incl. — 500-μH miniature choke (J. W. Miller 70F504A1).
S1 — Spst miniature toggle.
TP1 — Vector T2.8 terminal.
U1-U3, incl. — Motorola IC.
U4 — ESEL AL-1A for 11.5-MHz i-f, KVG 107-01 for 10.7 MHz.
Y1 — International Crystal type EX.
Z1 — 2-watt audio amplifier, 1-volt sensitivity (Amperex PCA-1-14).

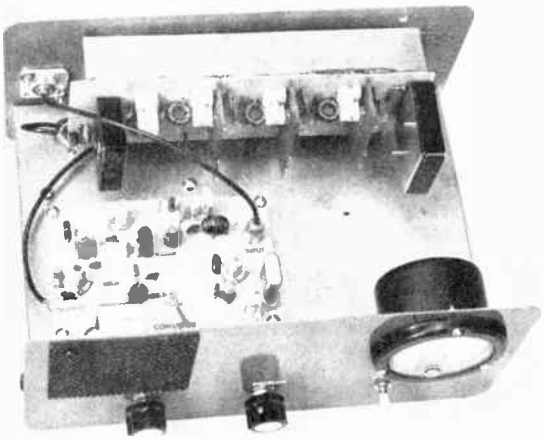

Fig. 14-41 — Top view of the receiver. The etched circuit board containing the front-end components is at the lower left, while the i-f amplifier/detector circuit board is bolted to the rear wall of the cabinet.

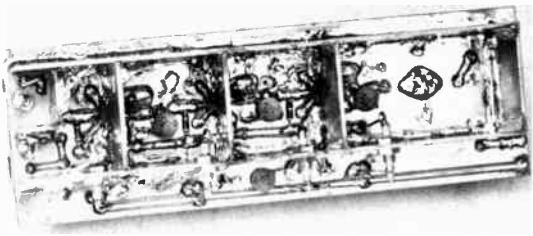

Fig. 14-43 — The bottom view of the i-f board shows the shielding and filtering used.

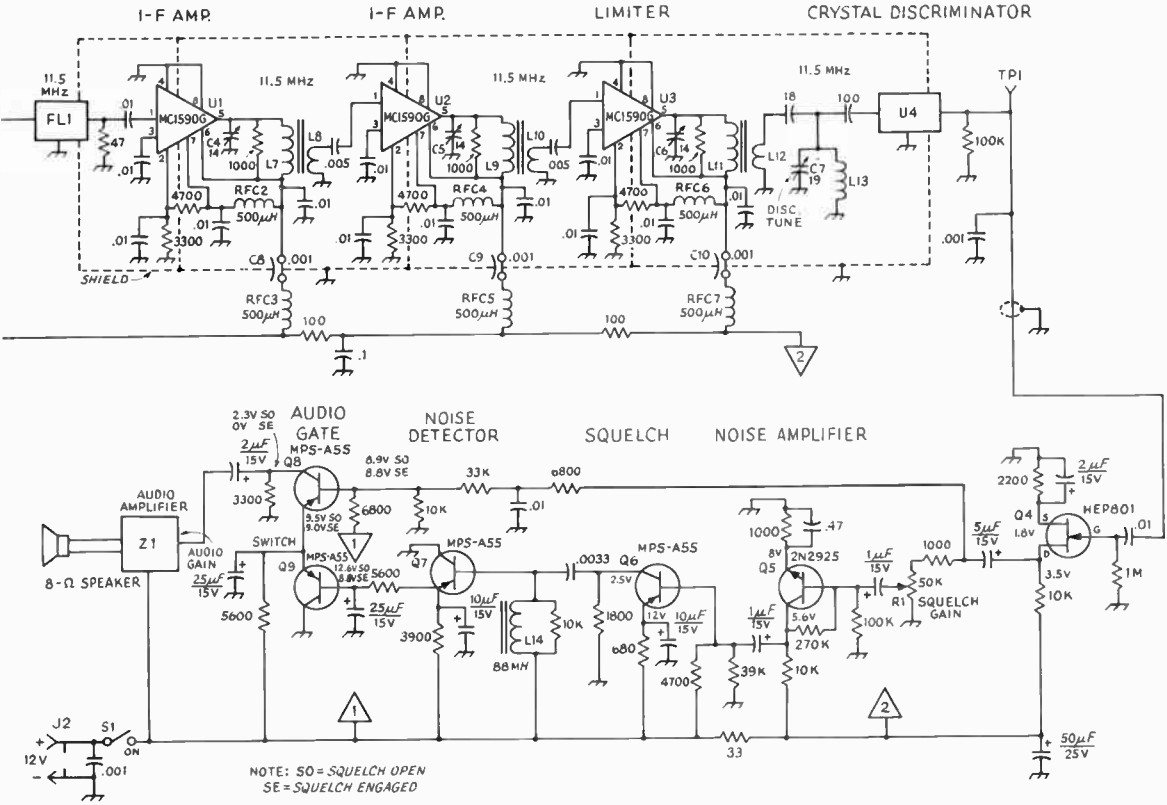

used only in a ham shack. Power requirements for the receiver are 12 to 13.5 volts at 70-mA drain (squelch engaged) and 200 mA (at full audio output). Since automobile electrical systems can have voltages as high as 16 volts, a series regulator should be included for mobile operation.

Alternate values for the rf and oscillator coils are given for 6-meter operation. To set the receiver for the 6-meter calling frequency, 52.525 MHz, a 41.025-MHz crystal is required. When built for 29.6 MHz, this unit can be used for 2-meter reception by adding any 144- to 148-MHz converter, having 10-meter i-f output, ahead of the fm receiver. Suitable designs are shown in Chapter Nine. With a converter i-f of 28 to 32 MHz, a 19.44-MHz crystal would be needed in the 10-meter receiver for reception of 146.94 MHz.

Alignment

A signal generator and a VTVM are required for receiver alignment. The VTVM should be connected to terminal TP1 and set to read 0-3 V dc. The generator should be set to about 29.6 MHz, and connected to J1 on the receiver. Rotate F1 fully counter clockwise, and you should hear noise in the speaker. If no noise is heard, place your finger on the input terminal of Z1. If the audio module is working, a loud hum will be heard. No noise output indicates that the squelch may be locked up. Check the voltages given in Fig. 14-42 against those found on the audio gate.

With a cw input signal, adjust C4, C5 and C6 for a maximum reading on the VTVM. Then set C1 and C2 for maximum indicated output voltage. Set the signal to 29.585 and note the VTVM reading. Then set the generator to 29.615 MHz and adjust C7 for a VTVM reading of the same magnitude, but opposite polarity, from that obtained on the "low side" of 29.6 MHz. Repeat the procedure several times to assure a correct adjustment.

With the basic alignment completed, inject a 29.600-MHz signal – the output of a 100-kHz calibrator will do. Then set C3 so that the VTVM reads zero voltage. This completes the rf and i-f alignment. Connect an antenna and advance the squelch control, R1, until the background noise disappears. The squelch should close the audio gate at one-third to one-half scale rotation of R1.

With the winter openings on 10 meters providing signals from many parts of the country, the receiver copies both local and "skip" stations using just an eight-foot length of wire for an antenna. Fm is particularly susceptible to phase distortion when signals are propagated via the ionosphere. This causes the severe distortion often heard on some 10-meter fm transmissions. Both wide- and narrow-band fm are in use on 29.6 MHz, so the wideband i-f filter is the best choice, because it allows copy of stations using either deviation.

IMPROVING FM RECEIVER PERFORMANCE

Many older fm receivers, and some new models, do not have sufficient sensitivity or limiting capability. Also, the transceivers designed for the mobile telephone service do not have a squelch or audio power-amplifier circuit. Suitable accessory units can be easily constructed to improve the performance of a rig deficient in any of these areas.

A simple preamplifier, such as shown in Fig. 14-45 for 146 MHz and in Fig. 14-47 for 440 MHz, may be added to a receiver to increase its sensitivity and to improve limiting (as the overall gain before the limiter will be increased by 10-15 dB). The 2-meter version uses a dual-gate MOSFET while the 440-MHz unit employs two JFETs in a grounded-gate circuit. Both amplifiers are adjusted by peaking all tuned circuits for maximum limiter current while receiving a weak signal.

A receiver will have a poor limiting characteristic if the gain before the limiter circuit is insufficient, or if the limiter itself is of poor design. The circuit of Fig. 14-48 can be added to a receiver to replace an existing limiter stage. The new limiter uses an RCA CA3011 integrated circuit. Care must be used in the installation and layout of this high-gain IC to insure stability. The CA3011 will provide a "hard" limiting characteristic with about 100 mV of signal input.

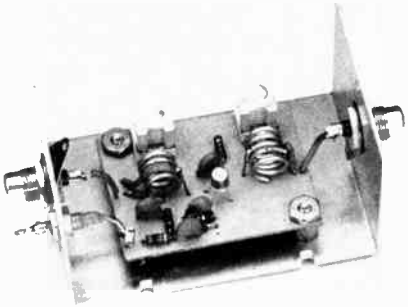

Fig. 14-44 — The 2-meter preamp. may be mounted in a small Minibox or connected directly inside an fm receiver.

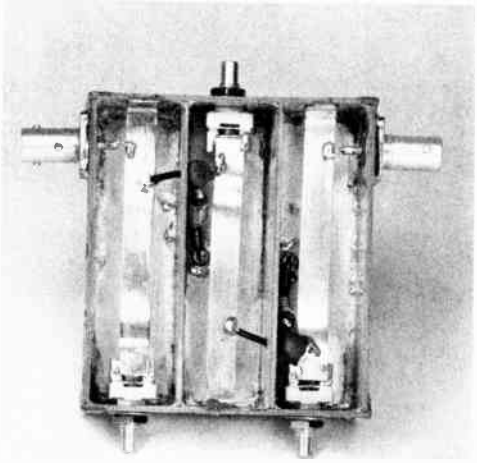

Fig. 14-46 — The 440-MHz preamplifier is constructed in a 3 X 3 1/2 X 1-inch box made of double-sided circuit board. All abutting edges are soldered to complete the enclosure. Two 3 X 15/16-inch shields separate the tuned lines.

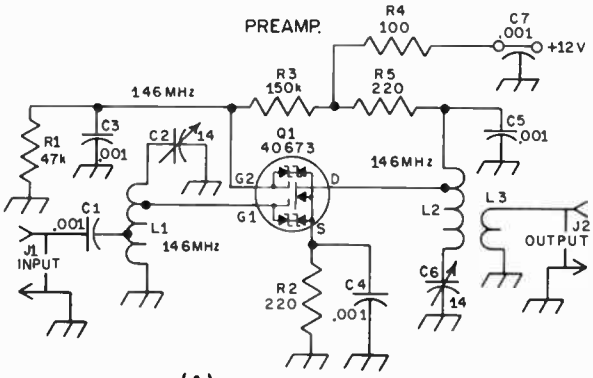

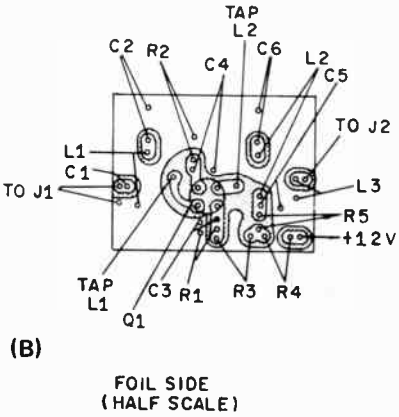

Fig. 14-45 — Circuit diagram (A) and pc-board layout (B) for the 2-meter preamplifier. Resistors are 1/4-watt composition and capacitors are disk ceramic unless otherwise noted. Components not listed below are given designators for circuit-board location purposes.

C2, C6 — Air variable (Johnson 189-506-5).

J1, J2 — Phono type, panel mount

L1 — 5 turns, No. 16, 5/16 inch dia, 1/2 inch long. Tapped at 2 turns for the antenna connection, and 4 turns for G1.

L2 — 4 turns, No. 16, 5/16 inch dia, 3/8 inch long. Tapped at 2 turns.

L3 — 1 turn, plastic-covered hookup wire, 5/16 inch dia, placed between two turns of L2.

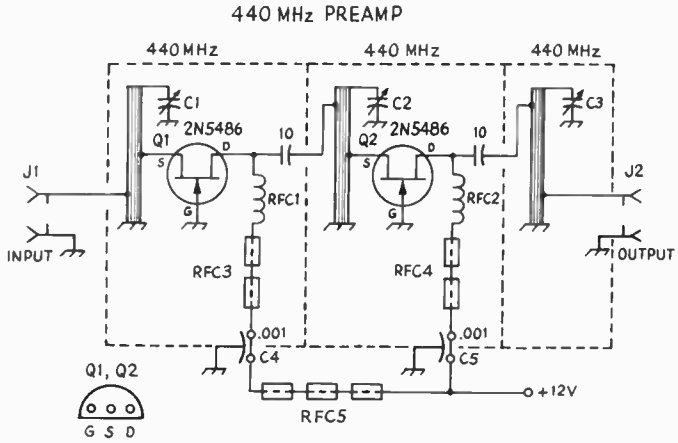

Fig. 14-47 — Schematic diagram of the uhf preamplifier. Capacitors are disk ceramic unless otherwise noted.

C1-C3, incl. — 1.4 to 9.2-pF miniature variable (Johnson 189-0563-001).

C4, C5 — Feedthrough type.

J1, J2 — BNC type, chassis mount.

L1-L3, incl. — 2 5/8 X 1/4-inch strip of brass, soldered to the enclosure on one end and to the capacitor at the other. Input and output taps (on L1 and L3) are 1/2-inch up from the ground end. Drain taps for Q1 and Q2 on L2 and L3, respectively, are made just below C2 and C3.

RFC1, RFC2 — 420-MHz choke (Miller 4584).

RFC3, RFC4 — Two ferrite beads on a short piece of No. 20 hookup wire. (Beads are available from Amidon Associates, 12033 Otsego St., N. Hollywood, CA 91607.)

Q1, Q2 — Motorola JFET.

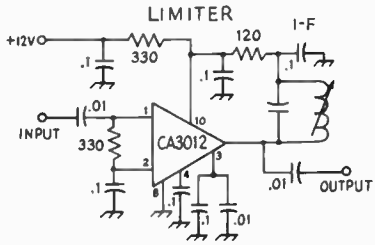

Fig. 14-48 — Diagram of a limiter which may be added between the last i-f stage and the detector of a receiver.

FM Bibliography

Goldsmith *et al*, *Frequency Modulation*, in two volumes, RCA Review, RCA, 1948.

Rider and Uslan, *FM Transmission and Reception*, John F. Rider Publisher, 1948.

Wolf, *FM Schematic Digest*, Two-Way Radio Engineers, 1970.

Pre-Progress Line Diagrams, in two volumes, Mobile Radio Department, General Electric Company, 1968.

Hund, *Frequency Modulation*, McGraw-Hill Book Company, 1942.

Lytel, *Two-Way Radio*, McGraw-Hill Book Company, 1959.

Vhf Fm Circuits

Construction projects for the amateur vhf bands are contained in chapters 7, 9, and 10. Additional fm projects can be found in the third edition of the *Radio Amateur's VHF Manual*.

Specialized Communications Systems

The field of specialized amateur communications systems includes radioteletype, amateur television, amateur facsimile, phone patching, and space and satellite communications. Radio control of models is not a "communications" system in the amateur (two-way) sense. The specialized hobby of radio control does have a large following, but "citizen-band" provisions for frequency allocations and operator registrations divorce it from the strictly ham-radio field (unless one wishes to avoid the QRM).

By far the greatest activity in the specialized fields is to be found in radioteletype (RTTY). Operation using frequency-shift keying techniques is permitted on all amateur bands except 160 meters.

Activity in amateur TV (ATV) can be found primarily in a number of population centers around the country. Most of the work is based on converted entertainment receivers and manufacturer's-surplus camera tubes (vidicons). ATV is permitted on the amateur bands above 420 MHz, and this and the broadband nature of the transmissions precludes extensive DX work.

Slow-scan TV (SSTV) is a narrow-band system that is permitted in any of the phone bands except 160 meters. It is a completely electronic system, however; no photographic techniques are required. Pictures are transmitted in 8 seconds or less.

Amateur facsimile operation, under present U.S. regulations, is permitted only above 50.1 MHz. Operation in the 6- and 2-meter bands is restricted to the use of shifting audio tones with an amplitude-modulated carrier (A4 emission), so operation through an fm repeater on these bands is prohibited. Facsimile operation is undertaken primarily by groups in heavily populated areas.

Amateur satellites – called *Oscars* for Orbiting Satellites Carrying Amateur Radio – offer another way of extending the range of vhf and uhf stations. Satellites can also operate in the hf region to provide communication during times of poor ionospheric conditions.

Phone patches permit third parties to communicate via amateur radio, through an interconnection between the amateur's station equipment and his telephone line. With voice operation in use, phone patching may be conducted in any amateur voice band between domestic stations, or between stations of any two countries permitting third-party communications.

RADIOTELETYPE (RTTY)

Radioteletype (abbreviated RTTY) is a form of telegraphic communication employing typewriter-like machines for (1) generating a coded set of electrical impulses when a typewriter key corresponding to the desired letter or symbol is pressed, and (2) converting a received set of such impulses into the corresponding printed character. The message to be sent is typed out in much the same way that it would be written on a typewriter, but the printing is done at the distant receiving point. The teletypewriter at the sending point may also print the same material.

The teleprinter machines used for RTTY are far too complex mechanically for home construction, and if purchased new would be highly expensive. However, used teletypewriters in good mechanical condition are available at quite reasonable prices. These are machines retired from commercial service but capable of entirely satisfactory operation in amateur work. They may be obtained from several sources on condition that they will be used purely for amateur purposes and will not be resold for commercial use.

A number of RTTY societies and clubs exist around the country, and some of them publish bulletins giving technical and operating information. Some of them have also accepted responsibility to help in club distribution of certain Western Union surplus teletypewriter equipment. For an up-to-date list of these clubs and sources of

The Teletype Corp. Model 28ASR teleprinter is used by many amateurs. In addition to the keyboard and page printer, this model contains facilities for making and sending perforated tapes.

equipment send a self-addressed stamped business-size envelope and your request to: American Radio Relay League, RTTY TIS, 225 Main Street, Newington, CT 06111.

Types of Machines

There are two general types of machines, the page printer and the tape printer. The former prints on a paper roll about the same width as a business letterhead. The latter prints on paper tape, usually gummed on the reverse side so it may be cut to letter-size width and pasted on a sheet of paper in a series of lines. The page printer is the more common type in the equipment available to amateurs.

The operating speed of most machines is such that characters are sent at the rate of either 60, 67, 75 or 100 wpm depending on the gearing ratio of a particular machine. Current FCC regulations allow amateurs the use of any of these four speeds. Interchangeable gears permit most machines to operate at these speeds. Ordinary teletypewriters are of the start-stop variety, in which the pulse-forming mechanism (motor driven) is at rest until a typewriter key is depressed. At this time it begins operating, forms the proper pulse sequence, and then comes to rest again before the next key is depressed to form the succeeding character. The receiving mechanism operates in similar fashion, being set into operation by the first pulse of the sequence from the transmitter. Thus, although the actual transmission speed cannot exceed about 60 wpm (or whatever maximum speed the machine is geared for), it can be considerably slower, depending on the typing speed of the operator.

It is also possible to transmit by using perforated tape. This has the advantage that the complete message may be typed out in advance of actual transmission, at any convenient speed; when transmitted, however, it is sent at the machine's normal maximum speed. A special tape reader, called a transmitter-distributor, and tape perforator are required for this process. A reperforator is a device that may be connected to the conventional teletypewriter for punching tape when the machine is operated in the regular way. It may thus be used either for an original message or for "taping" an incoming message for later retransmission.

Teleprinter Code

In the special code used for teleprinter operation, every character has five "elements" sent in sequence. Each element has two possible states, either "mark" or "space," which are indicated by different types of electrical impulses (i.e., mark

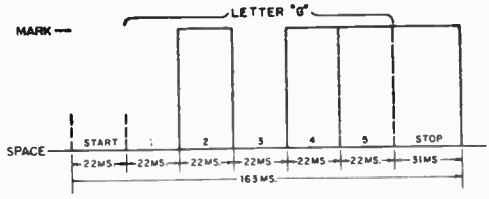

Fig. 15A-1 — Pulse sequence in the teleprinter code. Each character begins with a start pulse, always a "space," and ends with a "stop" pulse, always a "mark." The distribution of marks and spaces in the five elements between start and stop determines the particular character transmitted.

might be indicated by a negative voltage and space by a positive voltage). At 60 wpm each element occupies a time of 22 milliseconds. In addition, there is an intial "start" element (space), also 22 ms long, to set the sending and receiving mechanisms in operation, and a terminal "stop" element (mark) 31 ms long, to end the operation and ready the machine for the next character. This sequence is illustrated in Fig. 15A-1, which shows the letter G with its start and stop elements.

At maximum machine speed, it takes 163 ms to send each character. This is the equivalent of 368 operations per minute. At 75 wpm with this same code, 460 operations per minute result, and 600 for 100 wpm. The letter code as it appears on perforated tape is shown in Fig. 15A-2, where the black dots indicate marking pulses. Figures and arbitrary signs – punctuation, etc. – use the same set of code impulses as the alphabet, and are selected by shifting the carriage as in the case of an ordinary typewriter. The carriage shift is accomplished by transmitting either the "LTRS" or "FIGS" code symbol as required. There is also a "carriage return" code character to bring the carriage back to the starting position after the end of the line is reached on a page printer, and a "line feed" character to advance the page to the next line after a line is completed.

Additional System Requirements

To be used in radio communication, the pulses (dc) generated by the teletypewriter must be utilized in some way to key a radio transmitter so they may be sent in proper sequence and usable form to a distant point. At the receiving end the incoming signal must be converted into dc pulses suitable for operating the printer. These functions,

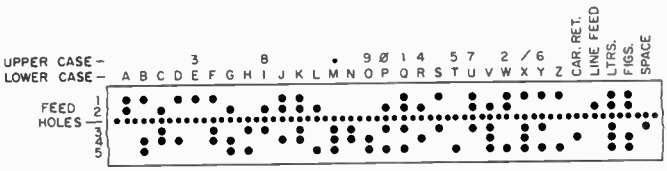

Fig. 15A-2 — Teleprinter letter code as it appears on perforated tape; start and stop elements do not appear. Elements are numbered from top to bottom; dots indicate marking pulses. Numerals, punctuation, and other arbitrary symbols are secured by carriage shift. There are no lower-case letters on a teletypewriter using this 5-unit code.

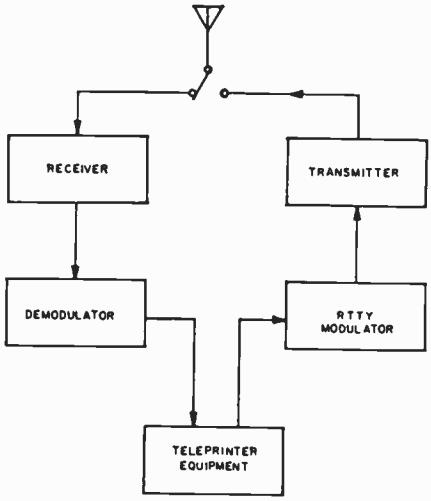

Fig. 15A-3 — Block diagram showing the basic equipment required for amateur RTTY operation.

shown in block form in Fig. 15A-3, are performed by electronic units known respectively as the frequency-shift keyer or RTTY modulator and receiving converter or RTTY demodulator.

The radio transmitter and receiver are quite conventional in design. Practically all the special features needed can be incorporated in the keyer and converter, so that most ordinary amateur equipment is suitable for RTTY with little or no modification.

Transmission Methods

It is quite possible to transmit teleprinter signals by ordinary "on-off" or "make-break" keying such as is used in regular hand-keyed cw transmission. In practice, however, frequency-shift keying is preferred because it gives definite pulses on both mark and space, which is an advantage in printer operation. Also, since fsk can be received by methods similar to those used for fm reception, there is considerable discrimination against noise, both natural and manmade, distributed uniformly across the receiver's passband, when the received signal is not too weak. Both factors make for increased reliability in printer operation.

Frequency-Shift Keying

On the vhf bands where A2 transmission is permitted, audio frequency-shift keying (afsk) is generally used. In this case the rf carrier is transmitted continuously, the pulses being transmitted by frequency-shifted tone modulation. The audio frequencies used have been more-or-less standardized at 2125 and 2975 Hz, the shift being 850 Hz. (These frequencies are the 5th and 7th harmonics, respectively, of 425 Hz, which is half the shift frequency, and thus are convenient for calibration and alignment purposes.) With afsk, the lower audio frequency is customarily used for mark and the higher for space.

Below 50 MHz, F1 or fsk emission must be used. The carrier is on continuously, but its frequency is shifted to represent marks and spaces. General practice with fsk is to use a frequency shift of 850 Hz, although FCC regulations permit the use of any value of frequency shift up to 900 Hz. The smaller values of shift have been shown to have a signal-to-noise-ratio advantage, and 170-Hz shift is currently being used by a number of amateurs. The nominal transmitter frequency is the mark condition and the frequency is shifted 850 Hz (or whatever shift may have been chosen) lower for the space signal.

RTTY with SSB Transmitters

A number of amateurs operating RTTY in the hf bands, below 30 MHz, are using audio tones fed into the microphone input of an ssb transmitter. With properly designed and constructed equipment which is correctly adjusted, this provides a satisfactory method of obtaining F1 emission. The user should make certain, however, that audio distortion, carrier, and unwanted sidebands are not present to the degree of causing interference in receiving equipment of good engineering design. The user should also make certain that *the equipment is capable of withstanding the higher-than-normal average power involved.* The RTTY signal is transmitted with a 100-percent duty cycle, i.e., the average-to-peak power ratio is 1, while ordinary speech waveforms generally have duty cycles in the order of 25 percent or less. Many ssb transmitters, such as those using sweep-tube final amplifiers, are designed only for low-duty-cycle use. Power-supply components, such as the plate-voltage transformer, may also be rated for light-duty use only. As a general rule when using ssb equipment for RTTY operation, the dc input power to the final PA stage should be no more than twice the plate dissipation rating of the PA tube or tubes.

FREQUENCY-SHIFT KEYERS

The keyboard contacts of the teletypewriter actuate a direct-current circuit that operates the printer magnets. In the "resting" condition the contacts are closed (mark). In operation the contacts open for "space." Because of the presence of dc voltage across the open keyboard contacts in such an arrangement, they cannot normally be used directly to frequency-shift-key another circuit. Isolation in the form of a keying relay or electronic switching is ordinarily used.

Saturated-Diode Keying

Perhaps the simplest satisfactory circuit for frequency-shift keying a VFO is the one shown in Fig. 1. This uses a diode to switch a capacitor in and out of the circuit, and is intended for use in a transmitter which heterodynes the VFO signal to the operating frequency. Because of the small number of parts required for the modification, they can often be mounted on a small homemade subchassis, which in turn is mounted alongside the VFO tube. Connection to the VFO circuit can be made by removing the tube from its socket,

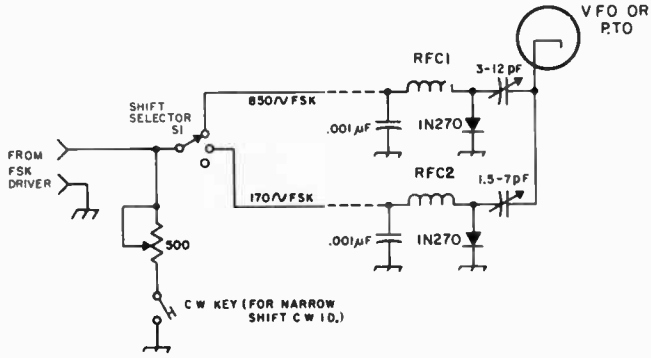

Fig. 1 — Frequency-shift keyer using saturated diodes. RFC1, RFC2 — 2.5 mH (National R-100). S1 — Rotary, 1 pole, 2 position. (W8SDZ, *QST*, June 1969)

wrapping the connecting lead around the tube's cathode pin, and reinserting the tube in its socket. The variable capacitors are adjusted for the desired shifts. Once set, the shifts will remain constant for all bands of operation. With this circuit the VFO frequency will be lower on space when the fsk driver of the RTTY demodulator shown later is used. If VFO "sideband inversion" takes place in a mixer stage of the transmitter, it will be necessary to key from the afsk driver output of the demodulator to send a signal which is "right side up."

Be sure to use an NP0 type miniature ceramic trimmer for best stability. Use only an rf choke wound on a ceramic form. Ferrite or iron-core types are not suitable because of excessive internal capacitance, so the National type R-100 is recommended. Use only the 1N270 diode specified. This diode is a special high-conductance computer type which provides maximum circuit *Q*, avoiding variations in oscillator output level.

"Shift-Pot" Keying Circuit

The circuit of Fig. 2 may be used with transmitters having a VFO followed by frequency-multiplying stages. The amount of frequency multiplication in such transmitters changes from one amateur band to another, and to maintain a constant transmitted frequency shift readjustment is necessary during band changes. In this circuit the natural VFO frequency is used for mark, and for space the frequency is lowered somewhat depending on the current flowing through CR1. R1 adjusts this current, and therefore controls the amount of frequency shift. As shown, the circuit may be keyed by the fsk driver stage of the RTTY demodulator shown later. If a keying relay is used, Q1 may be omitted and the keying contacts (closed on mark, open on space) connected directly from the junction of R1 and R2 to ground.

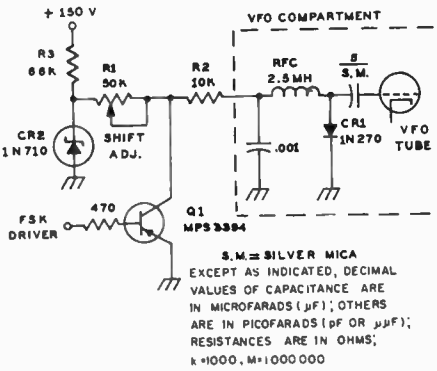

Fig. 2 — "Shift-pot" frequency-shift keyer circuit. The shift-adjustment control may be remoted from the VFO circuit.
CR2 — Zener, 6.5-V 400 mW (1N710 or equiv.).
R1 — Linear-taper control, low wattage.
Q1 — Audio transistor, npn silicon (Motorola MPS3394 or equiv.).

Leads inside the VFO compartment should be kept as short as possible. Lead length to the remainder of the circuit is not critical, but to avoid inducing rf or 60-Hz hum into the circuit, shielded wiring should be used for runs longer than a few inches. Positive voltages other than 150 may be used for the bias supply; the value and wattage of R3 should be chosen to supply a current of 2 mA or more to the 6.5-V Zener diode.

A SIMPLE TWO-TRANSISTOR AFSK GENERATOR

This afsk generator can be built for under $10, but its low cost should not be used as a measure of its performance. It is small, solid-state, reliable and stable, and uses only a few parts. The circuit contains no toroids or other inductors, and it provides for either 850- or 170-Hz shift, with provision for narrow-shift Morse-code identification.

The heart of the afsk generator is an *RC* twin-T transistor. The schematic is shown in Fig. 2 on page 464. In this circuit, the method of changing the frequency of oscillation is to change the equivalent value of one of the resistors in the basic twin-T circuit. This is easily done in all cases of interest.

The waveform at the junction of R1, R2, and C3 is an undistorted sine wave. This signal is fed through C4 into the next stage. Q2 is an amplifier for the high-impedance output, and an emitter follower for the low-impedance output.

Construction

Most of the parts are mounted on a 2 X 4-inch etched circuit board, but the layout is not critical.

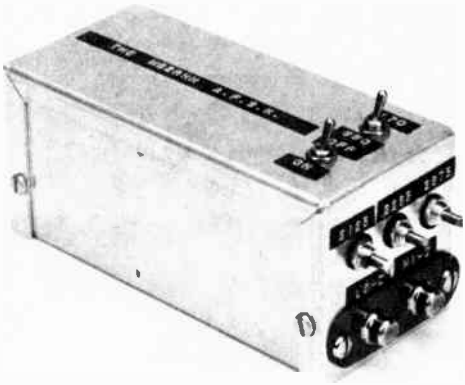

Fig. 1 — The complete afsk generator built into a Minibox as described by WB2RHM in September 1969 *QST*. All adjustment controls and switches are available from the outside. The key jacks for the RTTY keyboard circuit and for Morse-code identification are located on the opposite end of the box, hidden in this view.

The circuit board, the battery, the switches, and frequency adjusting controls were mounted in a 5 X 2 1/4 X 2 1/4-inch aluminum Minibox.

Care should be used when putting the 2N2923s into the circuit. The lead arrangement is not the common one that you normally find for transistors. Look at the basing diagram in Fig. 2 when you are working with Q1 and Q2. Care should also be used when hooking up the battery leads; get the polarity right. You may not destroy the transistors, but the circuit will not work properly should you make a mistake with the polarity.

When everything is finished and adjusted, if you find some rf getting into the circuit, bypass the input and output connectors with capacitors of appropriate value. Use just enough capacitance to get rid of the rf but not enough to affect the output.

Adjustment

Once the generator is assembled and checked with an oscilloscope to see that it really is oscillating, you can set the frequencies. If you don't have a frequency counter, you can use an accurately tuned terminal unit and an oscilloscope to set up the frequencies. The generator should be

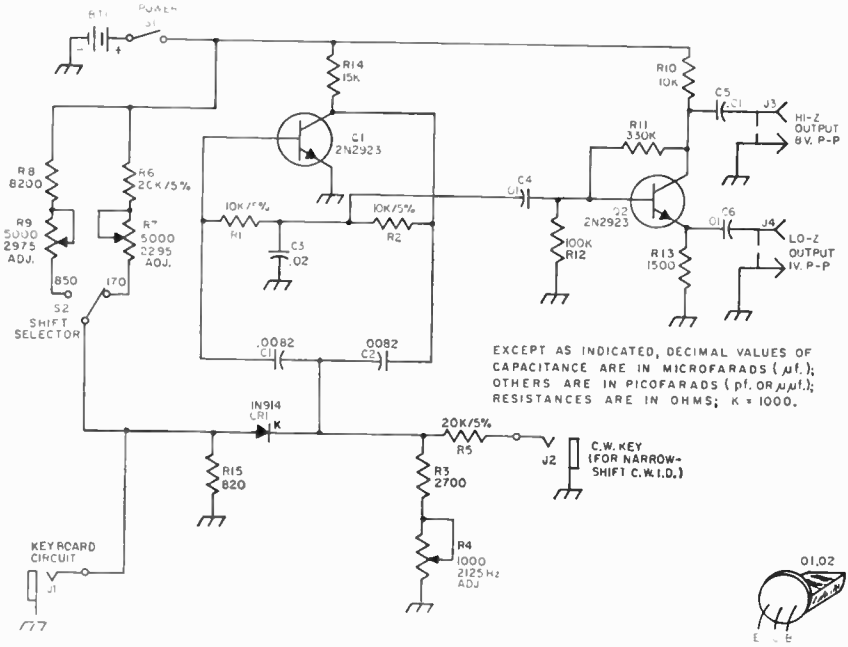

Fig. 2 — The transistorized afsk generator. All fixed resistors are 1/4-watt, 10-percent tolerance, unless otherwise marked. Components not listed in the parts list below are for text reference and circuit board identification. The K at CR1 identifies its cathode end for circuit-board orientation.

BT1 — 9-volt transistor radio battery.
C1, C2 — .0082 µF paper or Mylar, 100 volts.
C3 — .02 µF, paper or Mylar, 100 volts.
C4, C5, C6 — .01 µF, ceramic disk, 1000 volts.
CR1 — Small-signal silicon diode (1N914 or similar).
J1, J2 — Single-circuit phone jack.
J3, J4 — Phono jack.
Q1, Q2 — Af amplifier transistor, npn silicon (GE 2N2923 or similar).
R4 — 1000-ohm linear-taper carbon control; subminiature (Lafayette 32T7354 or equiv.).
R7, R9 — 5000-ohm linear-taper carbon control, subminiature (Lafayette 32T7355 or equiv.).
S1 — Miniature spst toggle.
S2 — Miniature spdt toggle.

calibrated under actual operating conditions, rather than isolated on a test bench, because variations in the resistance of the keyboard circuit or in the load impedance will have some effect on the frequencies of operation.

Feed the output of the unit to your demodulator and measure the voltage across the tuned circuits in the demodulator. You should see the voltage peak up as you reach the desired frequency.

There are three frequencies to be set on this afsk generator. First set the mark frequency. Leave the cw key open and close the keyboard circuit. Adjust R4 until the standard frequency of 2125 Hz is reached. Next set the narrow-shift space frequency. Leave the cw key open and open the keyboard circuit. Be sure that the shift-selector switch is in the 170-Hz position. Adjust R7 until the standard frequency of 2295 Hz is reached. Then set the normal-shift space frequency. Leave the cw key and the keyboard circuit open, and place the shift selector in the 850-Hz position. Adjust R9 until the standard space frequency of 2975 Hz is reached.

If possible, you should check to see that the narrow-shift cw ID gives a shift of at least 100 Hz. If the shift is less, make R5 a lower value resistance. Increasing the value of R5 will reduce the cw-ID shift.

The current drain of the generator is about 2 mA, so shelf life may be expected for the battery.

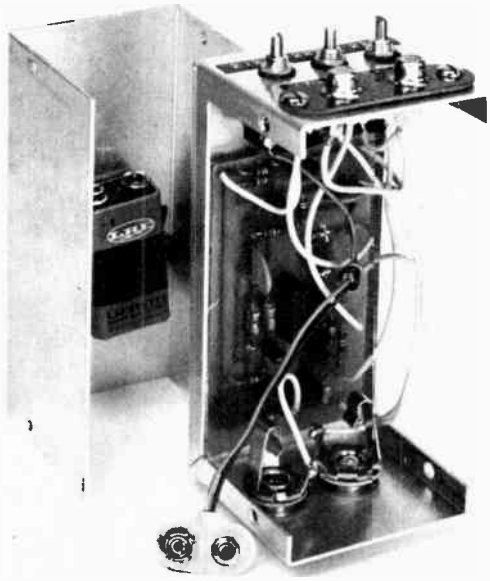

Fig. 3 — The generator uses a relatively small number of parts, as evidenced by this photograph. The use of an etched circuit board simplifies the construction. A suitable etching pattern is given in *QST* for September, 1969, p. 38.

AN RTTY DEMODULATOR

Fig. 1 on page 466 shows the diagram of a solid-state demodulator which can be built for approximately $50. Using surplus 88-mH toroidal inductors,[1] the discriminator filters operate with audio tones of 2125 and 2975 Hz for copying 850-Hz shift. The addition of C1 and S5 will permit one to switch-select 170-Hz-shift operation, using tones of 2125 and 2295 Hz.

The demodulator is intended to be operated from a 500-ohm source. If only a 4- or 8-ohm speaker output is available at the receiver, a small line-to-voice-coil transformer should be used between the receiver and the demodulator to provide the proper impedance match. An integrated-circuit operational amplifier, having very high gain capability, is used for the limiter. The discriminator filters and detectors convert the shifting audio tones into dc pulses which are amplified in the slicer section. The keyer transistor, Q5, controls the printer's selector magnets, which should be wired for 60-mA operation. The teleprinter keyboard is to be connected in series with the printer magnets, both being connected to the demodulator via J3. Typing at the keyboard will then produce local copy on the printer, and will also produce voltages at J1 and J2 for frequency-shift keying a transmitter or an audio oscillator.

The autoprint and motor-delay section provides optional features which are not necessary for basic operation. This section provides a simulated mark signal at the keyer when no RTTY signal is being received, preventing cw signals and random noise from printing "garble" at the printer. The motor-control circuit energizes the teleprinter motor in the presence of an RTTY signal, but turns off the motor should there be no RTTY signal present for approximately 30 seconds.

[1] Toroids may be purchased from Typetronics, Box 8873, Ft. Lauderdale, FL 33310.

Adjustments

Measure the voltage at pin 3 of the IC; it should be approximately 11.2 volts dc. With the audio input grounded, set R1 so that the voltage at pin 7 is half that at pin 3, about 5.6 volts. Next connect a VTVM to point A, and open S5. With a mark-tone input, adjust the tone frequency for a maximum reading, around −2.5 volts. Then change the tone for maximum reading on the space frequency. Adjust R2 until the voltages are equal.

With afsk at vhf, audio tones modulating the carrier are fed from the receiver to the RTTY demodulator. At hf, the BFO must be energized and the signal tuned as if it were a lower-sideband signal for the proper pitches. If the tuning-indicator meter is used, the hf signal should be tuned for an unflickering indication. A VTVM connected at point A of Fig. 1 will give the same type of indication. An oscilloscope may be connected to the points indicated in the filter section and used for a tuning indicator (see *QST*, December 1968, p. 13).

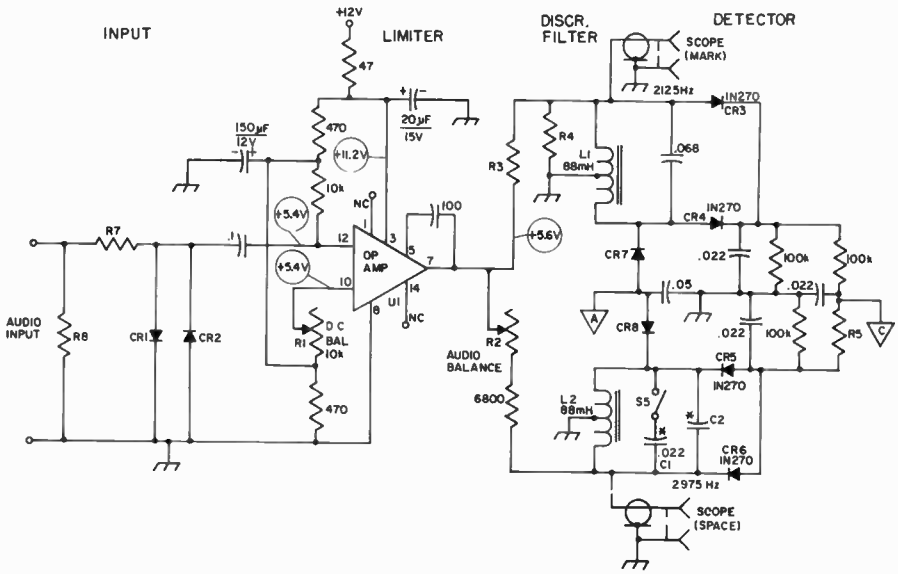

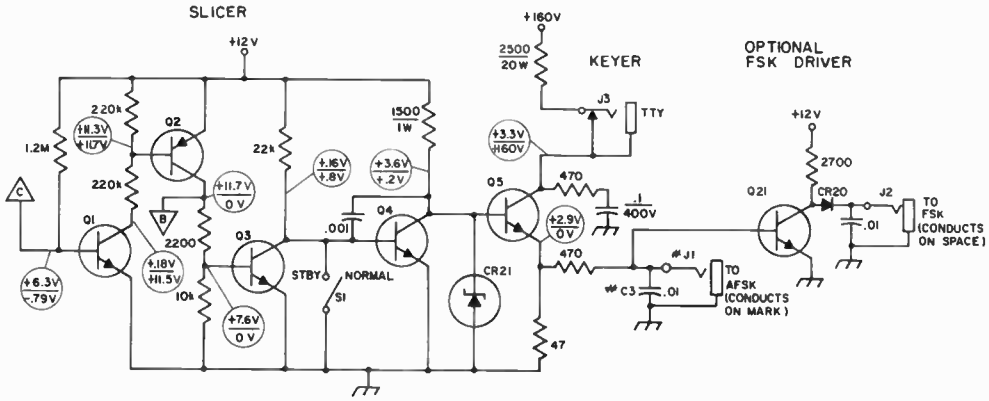

EXCEPT AS INDICATED, DECIMAL VALUES OF CAPACITANCE ARE IN MICROFARADS (µF); OTHERS ARE IN PICOFARADS (pF OR µµF); RESISTANCES ARE IN OHMS; k=1000, M=1000 000.

OPTIONAL TUNING-INDICATOR CIRCUIT

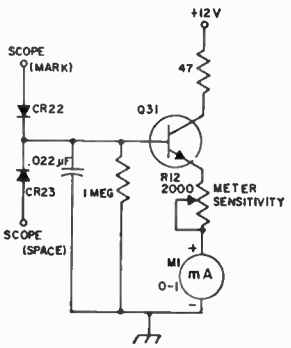

Parts for optional tuning-indicator circuit:

CR22, CR23 — Silicon diode, 50 PRV or greater (1N4816 or equiv.).

M1 — 0-1 mA dc meter (Shurite 8336 or equiv.).

Q31 — Audio transistor, npn silicon (Motorola MPS3394 or equiv.).

R12 — 2000-ohm linear-taper control, subminiature, for horizontal circuit-board mounting (Mallory MTC-23L4 or equiv.).

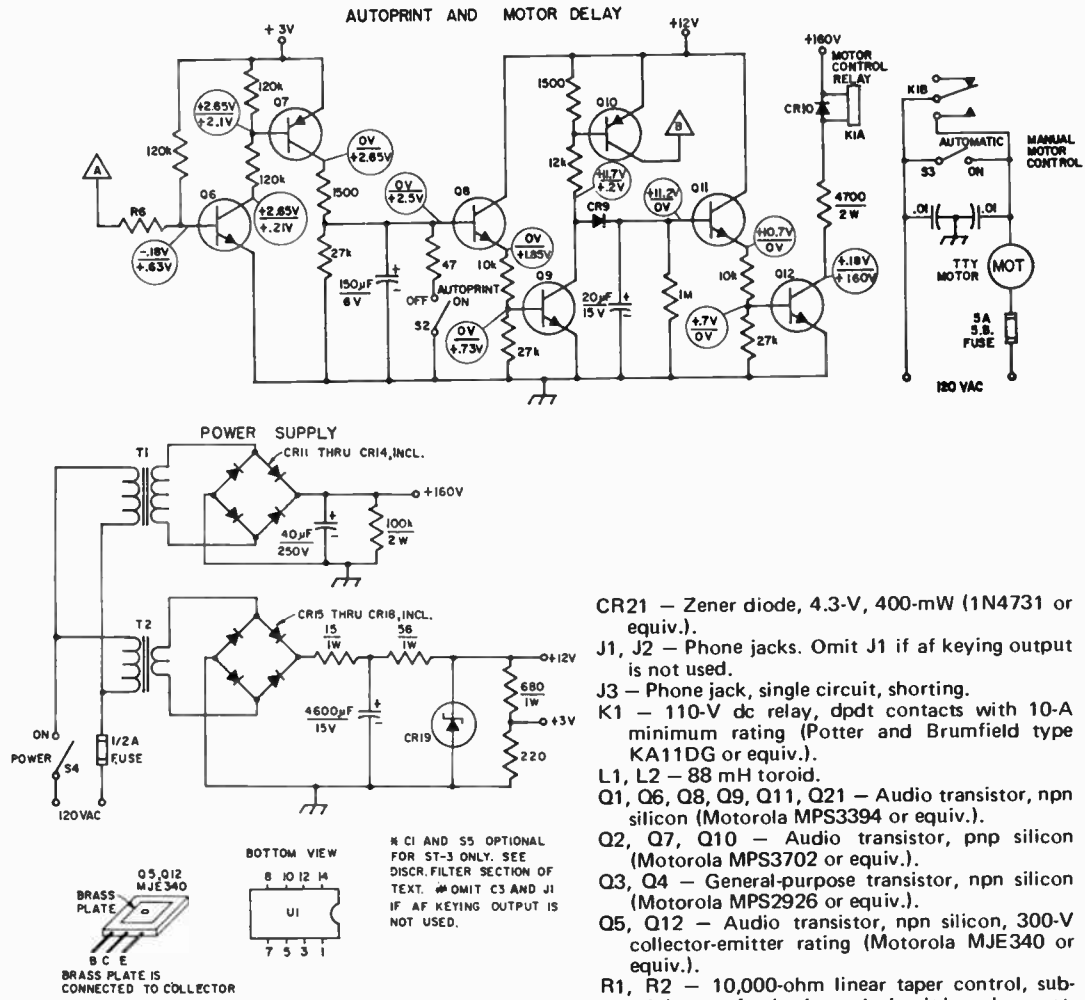

C1 — Optional
C2 — .033 µF, paper or Mylar, 75- or 100-volt rating.
C3 — .01 µF Mylar or disk, 600 volt. Omit if af keying output is not used.
CR1, CR2, CR7, CR8, CR9, CR15-CR18, incl., CR20 — Silicon diode, 50 PRV or greater (1N4816 or equiv.)
CR3-CR6, incl. — Germanium diode, type 1N270.
CR10-CR14, incl. — Silicon rectifier, 400 PRV or greater (1N4004 or equiv.).
CR19 — Zener diode, 12-V, 1-W (Sarkes-Tarzian VR-12 or equiv.).
CR21 — Zener diode, 4.3-V, 400-mW (1N4731 or equiv.).
J1, J2 — Phone jacks. Omit J1 if af keying output is not used.
J3 — Phone jack, single circuit, shorting.
K1 — 110-V dc relay, dpdt contacts with 10-A minimum rating (Potter and Brumfield type KA11DG or equiv.).
L1, L2 — 88 mH toroid.
Q1, Q6, Q8, Q9, Q11, Q21 — Audio transistor, npn silicon (Motorola MPS3394 or equiv.).
Q2, Q7, Q10 — Audio transistor, pnp silicon (Motorola MPS3702 or equiv.).
Q3, Q4 — General-purpose transistor, npn silicon (Motorola MPS2926 or equiv.).
Q5, Q12 — Audio transistor, npn silicon, 300-V collector-emitter rating (Motorola MJE340 or equiv.).
R1, R2 — 10,000-ohm linear taper control, subminiature, for horizontal circuit-board mounting (Mallory MTC-14L4 or equiv.).
R3 — 5600 ohms.
R4 — 18,000 ohms.
R5 — 82,000 ohms.
R6 — 0.1 megohm.
R7 — 1000 ohms.
R8 — 560 ohms.
S1-S5, incl. — Spst toggle. S5 optional.
T1 — Power; primary 120 V; secondary 125 V (Chicago-Stancor PA-8421 or Triad N51-X or equiv.).
T2 — Power; primary 120 V; secondary 12 V, 350 mA (Chicago-Stancor P8391 or equiv.).
U1 — Integrated-circuit operational amplifier, GE PA238.

Fig. 1 — The ST-3 RTTY demodulator (by Hoff — from *QST*, April 1970). Unless otherwise indicated, resistors are 1/4-watt 10 percent tolerance. Capacitors with polarity indicated are electrolytic. Dc operating voltages are indicated in the limiter, slicer, keyer, and autoprint and motor delay circuits. All voltages are measured with respect to chassis ground with a VTVM. In the slicer and keyer stages, voltage values above the line should appear with a mark tone present at the demodulator input, while values below the line appear with a space tone present. In the autoprint and motor delay circuit, voltage values above the line occur with a mark or space tone present while those values below the line are present with only receiver noise applied at the demodulator input.

AMATEUR TELEVISION (ATV)

Television is not exactly new to amateur radio. Enterprising amateurs have been playing with this branch of the electronics art for a matter of 45 years or more. Files of *QST* dating back to the '20s offer proof that there was amateur television before many of our present-day amateurs were born. The methods used then bore little resemblance to the techniques employed today, but hams were sending and receiving pictures (or trying to) two generations ago.

QST carried many articles on television from 1925 on, and there was plenty of interest. But the work was being done by the motor-driven scanning disk method, and it was doomed to failure. Though many dollars and man-hours were spent on the problem, nobody succeeded in developing mechanical systems that were completely practical. As early as 1928, a *QST* author was pointing out the possibilities of electronic television, using the then rare-and-expensive cathode-ray tube. The days of the scanning disk were numbered.

But predicting the coming of electronic television and bringing it about were two quite different matters. Though it had become fashionable, by 1931, to say that "Television is just around the corner," the cathode-ray tube was a laboratory curiosity, and it was to remain so for some years to come, as far as most amateurs were concerned. Not until 1937 was the subject of television to appear again in *QST*. By then the problems involved in electronic television were gradually being solved. Usable components were beginning to appear, and television experimental work loomed as a possible field for the more advanced amateur. For more than two years almost every issue of *QST* carried something on television, but it was mostly concerned with the receiving end. The generation of a television picture for transmission was still considered to be beyond the radio amateur, until moderately priced iconoscope tubes were introduced for amateur use in 1940.

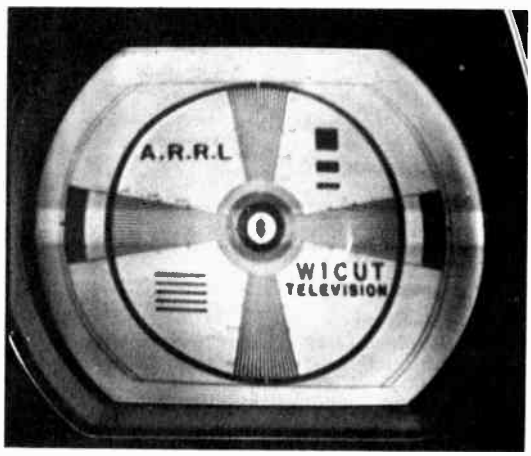

An actual 440-MHz TV picture transmitted with the equipment shown in Fig. 15B-2.

Television transmitter and camera design were treated extensively in *QST* for 1940.

The highly involved and expensive process required in getting on the air for actual television communication was just too much for most amateurs, and progress in amateur television slowed to a standstill until well into the postwar period. At that time, availability of most of the needed components on the surplus market gave amateur television the push that it had always needed, and the period since 1948 has seen more amateur TV activity than existed in all previous years combined. By 1960, color-TV signals were being transmitted by amateurs.

From several cities in this country has come news of activity in amateur television. Much of the effort has been concerned with transmitting. The trend in this country has been to use transmitting systems that would tie in with those employed in commercial services, so that ordinary home television receivers could be used for amateur work by the addition of a simple converter. In this country amateur TV is limited to the frequencies from 420 MHz up, because of the bandwidth involved.

A Novel Way to Get Started

The cost and complexity of TV gear has so far left most amateurs convinced that television is not for them, but ways have been found to cut corners. There have been several ideas developed for bringing the transmission of television nearer to the abilities of the average experienced ham. One such simplified system was developed by J. R. Popkin-Clurman, W2LNP, later to become W2BK. This system simplifies matters for the ham who would like to transmit transparencies (film negatives or positives, movies, diagrams, visual messages) without going into the complexities of camera design and construction. It also lets a local TV station and a standard TV receiver do some of the work, as shown in block-diagram form in Fig. 15B-1. A standard TV receiver is tuned to a local station and the lead from the receiver video amplifier to the cathode-ray tube is disconnected and the output of the amplifier is fed to a blanking generator. The output of the blanking generator is applied to the receiver cathode-ray tube, the raster of which is used as a light source.

In the simplest form of picture transmission, a transparency is placed directly on the face of the cathode-ray tube, which for this purpose can be almost any type, including those with P-7 phosphor. Light from the raster, passing through the transparency, is picked up by a photo tube and multiplier and fed to a video-amplifier unit that includes a high-frequency peaker and possibly a video phase inverter. The latter is used only if it is desired to transmit negatives in positive form. After passing through a clipper and blanking inserter and a mixer, the signal is ready for the modulator and transmitter. Sound and video are transmitted on the same channel, first by frequency modulating a 4.5-MHz oscillator. The 420-MHz

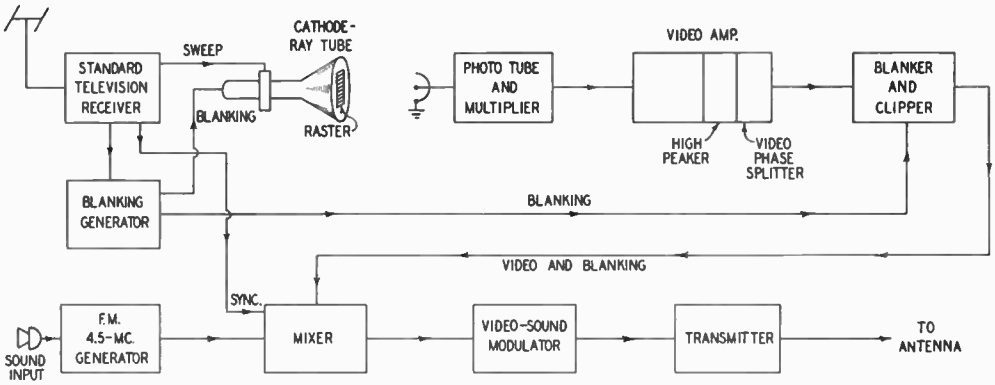

Fig. 15B-1 — Block diagram of the television system used by W2BK, formerly W2LNP. (From *QST*, June, 1950.)

transmitter is modulated simultaneously with this signal and the video, by means of the video-sound modulator.

The signal thus transmitted has all the characteristics of a commercial video transmission, and may be received on any standard home television receiver equipped with a 420-MHz converter. In the absence of a local TV station it is merely necessary to derive the sync and blanking from the receiver's own sweep circuits. In this case the picture will have only 262 lines, noninterlaced. It retains the same horizontal resolution, but the vertical resolution is reduced. In this type of operation it is desirable to sync the vertical to the 60-Hz power supply, to reduce hum effects.

The photo tube may be a 931-A multiplier type, available as surplus. The output of the photo tube is fed into a series of video amplifiers, one of which is a high-frequency peaker. This is necessary to compensate for the build-up and decay times of the cathode-ray tube's phosphor screen.

The rf section of the transmitter is crystal-controlled. The receiver has a crystal mixer and a 6J6 oscillator, followed by a cascode amplifier working into a home television receiver. The channel used for the i-f should be one that is not in use locally, and should be in the low TV band for best results.

The system may be adapted for transmission of movies. A film-projector light source is removed, and the photo tube installed in its place. A 60-Hz synchronous motor is used to drive the film sprocket and the film is run at 30 frames per second instead of 16 or 24. It is necessary to blank the raster during the film pull-down time. Pictures of live subjects may also be transmitted by projecting the light from the raster on the subject and collecting the reflected light with a condensing-lens system for the photo tube. Considerably greater light is needed than for transparencies, and a 5TP4 or a 5WP15 projection cathode-ray tube, with its associated high voltage, is suitable.

Adapting Closed-Circuit TV Systems

By adapting closed-circuit TV systems, a number of amateurs have been able to get a picture on the air without having to struggle with cut-and-try methods, not to mention the mechanical problems of camera construction. A manufactured TV camera and control unit are used, along with home-built rf sections necessary for the ATV station. Such a system is not restricted to sending slides or stills. It is capable of transmitting a moving picture of professional quality. Such a station is shown in Fig. 15B-2.

Many closed-circuit TV cameras provide a picture signal on any regular TV channel from 2 to 6, inclusive. In a typical system, the camera contains a vidicon camera tube, a three-stage video amplifier, a video output stage, a 55- to 85-MHz tunable oscillator, and a modulator stage that combines the rf, video, and sync signals from a control unit. The control unit contains the horizontal and vertical deflection circuits for the vidicon tube, a protective circuit that prevents damage to the vidicon in the event of a sweep-circuit failure, a blanking and vertical sync stage, and the power supply. For use in an ATV station, most amateurs choose to modify the camera oscillator circuit to provide crystal-controlled operation on a locally unused low TV channel. In this way, a regular TV receiver can be used as a monitor. The video-modulated rf signal from the camera is fed through amplifier and mixer stages to derive the transmitted video signal. For reception, a converter is used ahead of a regular TV receiver.

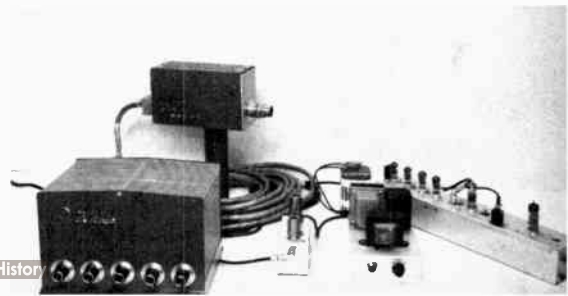

Fig. 15B-2 — The transmitting portion of a complete ATV station. The video system utilizes a modified RCA TV Eye closed-circuit camera and control unit, shown at the left. The 440-MHz TV signal comes out the BNC connector at the end of the mixer-amplifier chassis. The power supply and bias battery are also visible in the photograph. (From *QST*, November, 1962)

SLOW-SCAN TELEVISION (SSTV)

Fig. 51C-1 — A typical slow-scan TV picture.

Because of the required bandwidth, amateur TV transmissions in this country are limited to the frequencies above 420 MHz. With essentially line-of-sight propagation of signals at these frequencies, it has always been necessary for an amateur wishing to engage in ATV to interest another local amateur in this mode, or for him to work into a local group which may already be active if he did not wish to transmit pictures merely for his own amusement. For this reason, ATV has had little to offer to the amateur who lives in a sparsely populated area, perhaps hundreds of miles from any large city. Slow-scan TV, on the other hand, offers a great deal. By using voice-channel bandwidths, SSTV transmissions may be used in any amateur band except 160 meters. The amateur in the sparsely populated area can exchange pictures with the fellows in the big city, the next state, or even with fellows in other countries.

Work in the area of SSTV was pioneered by a group of amateurs headed by Copthorne Macdonald, W4ZII (later to become in succession, WA2BCW, WAØNLQ, WA3BTK and WA2FLJ). The first of Macdonald's several articles on the subject appeared in *QST* in 1958. Early on-the-air tests took place in the then-available 11-meter shared band, the only hf amateur band where "facsimile" transmissions were permitted. The video information was transmitted as amplitude modulation of a 2000-Hz subcarrier tone, which in turn was fed into the speech-amplifier circuits of a conventional transmitter.

The loss to U.S. amateurs of the 27-MHz band in September 1958 did much to dampen the enthusiasm of would-be slow scanners. However, special temporary authorizations were granted by the FCC to a few amateurs for the purpose of making experimental SSTV transmissions, first on 10 meters, and later on 20 meters. Tests by WA2BCW and others in 1959 and 1960 indicated that signal fading and interfering transmissions from other stations caused considerable degrading of pictures received from subcarrier a-m (scam) transmissions. This led to experiments with subcarrier fm (scfm) transmissions, and the superiority of this technique for average propagation conditions was immediately recognized. The resulting standards proposed by Macdonald in January 1961 have since been adapted and are in use today (see Table I). In the scfm system, the frequency of the audio tone conveys the video information, with 1500 Hz representing black and 2300 Hz representing white. Intermediate shades of gray are transmitted with intermediate-frequency tones. Tones of 1200 Hz (ultrablack) are used to transmit vertical and horizontal sync pulses. The success of experiments in the mid '60s on 20 meters with scfm, and especially the fact that SSTV occupies a normal voice-channel bandwidth with no side-frequency products to cause interference on adjacent channels, led to changes in the FCC rules.

SSTV Emissions

Since August 1968, narrow-band A5 and F5 emissions (SSTV) have been permitted in the Advanced and Extra Class portions of 75, 40, 20 and 15 meters, in all but the cw-only portions of 10, 6, and 2 meters, and the entire amateur range above 220 MHz. The regulations permit the transmission of independent sidebands, with picture information contained in one sideband and voice in the other. Few amateurs today are equipped for this type of operation, however. The usual practice is to intersperse picture transmissions with voice transmissions on single sideband.

A stipulation in the U.S. regulations limits the bandwidth of A5 or F5 emissions below 50 MHz; they must not exceed that of an A3 single-sideband emission, approximately 3000 Hz. This precludes

TABLE I

Amateur Slow-Scan Standards
(120-Line scfm)

	60-Hz Areas	*50-Hz Areas*
Sweep Rates:		
Horizontal	15 Hz (60 Hz/4)	16 2/3 Hz (50 Hz/3)
Vertical	8 sec.	7.2 sec.
No. of Scanning Lines	120	120
Aspect Ratio	1:1	1:1
Direction of Scan:		
Horizontal	Left to Right	Left to Right
Vertical	Top to Bottom	Top to Bottom
Sync Pulse Duration:		
Horizontal	5 millisec.	5 millisec.
Vertical	30 millisec.	30 millisec.
Subcarrier Freq.:		
Sync	1200 Hz	1200 Hz
Black	1500 Hz	1500 Hz
White	2300 Hz	2300 Hz
Req. Trans. Bandwidth	1.0 to 2.5 kHz	1.0 to 2.5 kHz

the use of an a-m transmitter with the standard SSTV subcarrier tones. Most amateurs operating in the hf bands feed the video information as a varying-frequency tone into the microphone input of an ssb transmitter, and with carrier suppression, F5 emission results. A seldom-used but quite feasible alternative is to frequency modulate an rf oscillator with video signals from the camera.

Because of the narrow bandwidth used, tape recordings of SSTV video signals can be made with an ordinary *audio* tape recorder running at 3 3/4 inches per second. Nearly every slow scanner preserves some of his on-the-air contacts on tape, and most prepare an interesting program to be transmitted. A good number of amateurs begin making two-way picture transmissions while equipped with nothing more than a receiving monitor and a tape recorder, in addition to ordinary station equipment. In lieu of a camera, they enlist the aid of a friend having the proper equipment to prepare a taped program which is sent during transmissions. Because of the slow frame rate with SSTV (one picture every 7 or 8 seconds), live pictures of anything except still subjects are impractical. Viewing a series of SSTV frames has frequently been compared to viewing a series of projected photographic slides.

Experiments are currently being made with the transmission of color pictures by SSTV. Various techniques are being used, but in essence the process involves the sending of three separate frames of the same picture, with a red, a blue, and a green filter successively placed in front of the camera lens for each of the three frames. At the receiving end of the circuit, corresponding filters are used and each frame is photographed on color film. After a tricolor exposure is made, the photograph is developed and printed in the normal manner. The use of Polaroid camera equipment with color film is popular in this work because it affords on-the-spot processing. Color reproduction by this technique can be quite good.

SLOW-SCAN TV VIEWING ADAPTER FOR OSCILLOSCOPES

The slow-scan TV adapter shown in Figs. 1-4, incl., permits the ham with an oscilloscope to view slow-scan TV with a minimum of investment and effort. The adapter has been used successfully with several oscilloscopes, including the Tektronix 514, Dumont 304, Heathkit IO-18, Heathkit IO-10, and a Navy surplus scope, OS-8B.

The oscilloscope's horizontal scan must be able to synchornize from an external trigger at 15 Hz. The scope should have a dc vertical input that will accept 10 volts. If the scope does not have a dc input, the vertical deflection amplifier may be able to be driven directly. The circuit shown in Fig. 3 was used with the Heath IO-18. This arrangement should be adaptable to other scopes not having a dc input, but R1 and R2 would have to be scaled to provide proper centering.

Most oscilloscopes have cathode-ray tubes with a P1 phosphor. The P1 phosphor is of short persistence, which is not suitable for slow-scan TV.

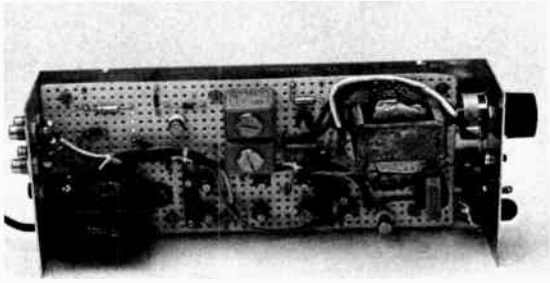

Fig. 1 – The SSTV Viewing Adapter with the top cover removed. The adapter may be constructed on Vectorbord, as shown. The transformer near the rear (left) is in the power supply circuit; the one near the front is in the video detector stage. On the front panel are the power switch and indicator, the manual vertical-sweep push button, and vertical sync control. Phono jacks on the rear panel are for connections to the oscilloscope and receiver. Two banana jacks are used for the CRT connections. (Originally described in *QST* for June, 1970, by W7ABW and W7FEN.)

Therefore, the P1 tube should be replaced with a P7-phosphor tube which has the long persistence required. The last two characters of the CRT type usually indicate the phosphor, and most types are available in several different phosphors. The Heath IO-18 uses a 5UP1 which was replaced with a 5UP7 at a cost of less than $15.00.[1] If a direct substitute cannot be found, it may be possible to find a surplus CRT of another type which will function. The Dumont 304 used a 5ABP1 CRT, which was replaced with a 5CP7. This CRT was obtained on the surplus market for less than $5.00.[2] If the purchase of a new oscilloscope is anticipated, a P7-phosphor cathode-ray tube should be requested.

Adapter Circuit Design

The schematic diagram of the slow-scan TV converter is shown in Fig. 2. The slow-scan signal from the audio output of a communications receiver, tape recorder, or other source is fed into the input of an integrated-circuit operational amplifier having a gain of 300. Therefore, a 0.1-volt ac peak-to-peak signal causes the amplifier to limit at the supply voltages, and the limited output will be approximately 28 volts ac peak-to-peak. The limited signal is then fed to a series video discriminator. The output of the video discriminator is fed to Q1, a video amplifier with a 6.3-volt ac filament transformer as a collector load. The transformer is used to provide voltage step-up. A transformer with 3000-volt insulation from ground is used, as the CRT grid circuit has a 1400-volt potential which must be insulated from ground. The video is

[1] Available from Barry Electronics, 512 Broadway, New York, NY 10012.
[2] Catalog SC2799P7, Fair Radio Sales, P. O. Box 1105, Lima, OH 45802.

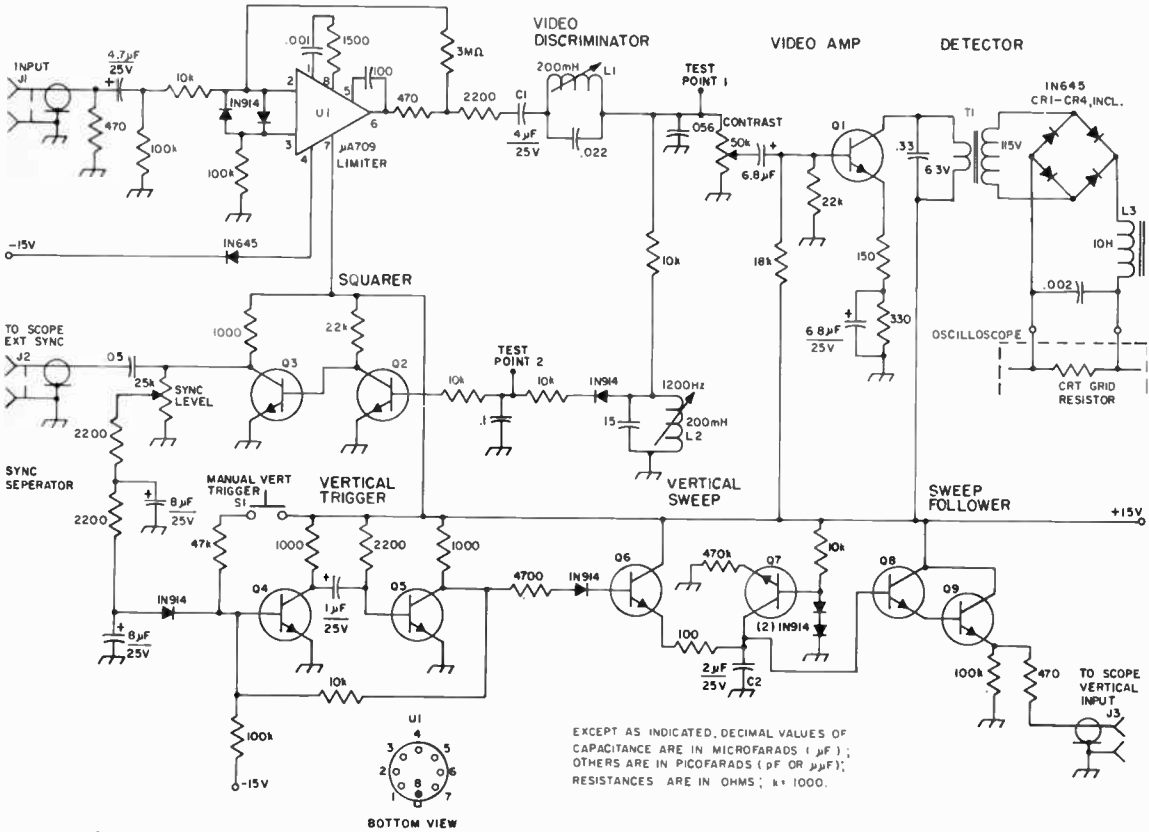

Fig. 2 — Schematic diagram of the slow-scan adapter. Capacitors with polarity indicated are electrolytic, others are ceramic or paper, except as indicated. Variable resistors are composition controls, linear taper. Resistors are 1/2-watt.

C1 — 4-µF, 25-volt, nonpolarized tantalum.
C2 — 2-µF, 25-volt, Mylar.
J1-J3, incl. — Phono jack.
L1, L2 — Variable inductor, approx. 200 mH (Miller 6330, UTC HVC-6, or Stancor WC-14).
L3 — 10-H, low-current choke, 3000-volt insulation from ground (Burstein-Applebee 18A959).
Q1-Q9, incl. — 2N718, 2N697, 2N2222, or 2N3641-3.
T1 — 6.3-volt, low current, 3000-volt insulation.
U1 — Operational amplifier (Fairchild µA709, Texas Instruments SN6715 or Motorola SC4070G).

then full-wave rectified and fed to a 1000-Hz filter. The output video dc is then connected across the scope CRT's series grid resistor to modulate the CRT intensity.

The output of the video discriminator is also fed to a 1200-Hz sync discriminator. This circuit passes only the 1200-Hz sync pulses. The 1200-Hz sync pulses are then rectified, filtered and fed to a two-stage amplifier, Q2 and Q3. The output of this squarer provides 15-volt sync pulses.

A 5-volt sawtooth voltage is required for vertical sweep on the oscilloscope. This voltage should have a very fast rise time and a linear decay. A sync separator circuit is used to separate the 30-ms vertical pulses from the 5-ms horizontal pulses. The vertical pulses are fed into the vertical trigger, a one-shot multivibrator. Provision is made for manually triggering the vertical sweep with a front-panel push button, S1, in case a vertical sync pulse is missed. The multivibrator triggers a transistor switch, Q6, that instantaneously charges C2 every time a vertical sync pulse is received. This capacitor is discharged at a linear rate through Q7. The base of Q7 is biased by two diodes at 1.2 volts. Thus, the current through Q7's 0.47-megohm emitter resistor is held at a constant value, giving a linear voltage discharge across C2. This sawtooth voltage is sampled by a Darlington transistor follower, Q8 and Q9, whose output will sweep from 10 to 5 volts dc when receiving slow-scan TV. The value of 5 volts was chosen so that when a signal is not present, the dot on the scope CRT will be off the screen.

Construction

The layout is relatively noncritical with the exception of the 6-volt ac filament transformer which will have high voltage on the secondary, so necessary precautions must be taken. It should be mounted away from the power transformer to minimize hum pickup. High-voltage wire is used to bring the CRT grid connection into the unit.

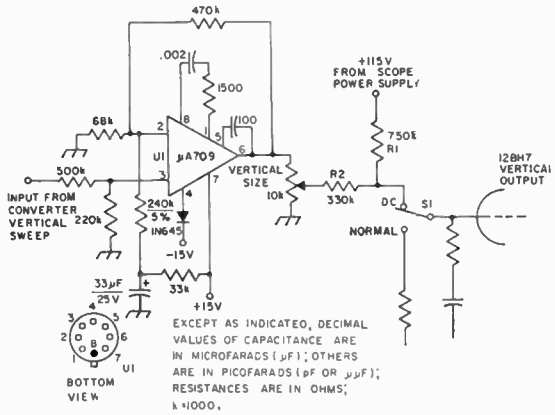

Fig. 3 — Amplifier circuit to provide a dc vertical input for ac-only oscilloscopes. Capacitors are ceramic, and resistors are 1/2-watt. The switch, S1, may be any convenient type. The operational amplifier, U1, is a Fairchild μA709. R1 and R2 should be adjusted in value to give proper centering, if necessary.

Sockets were used for the IC amplifier and transistors; however, the components can be soldered directly into the circuit. The vertical-scan output lead should be shielded. Several types of transistors may be used; the circuit was designed for devices with a minimum beta of 50. A variety of integrated operational amplifiers may be used; however, the 709 was chosen because of its low cost and availability.

Scope Modification

The potential between the CRT's control grid and the cathode varies the intensity. The control grid usually has an isolation resistor in series with the negative voltage lead. Video from the converter is connected across this resistor to vary the intensity of the CRT. This resistor should be at least 100 kΩ. If it is not this large in the existing scope circuit, it should be changed. This will have no effect on the scope's operation, since this control grid draws no current. There is usually ample room on most scopes to install two additional insulated jacks on the terminal board that has the direct deflection-plate connections.

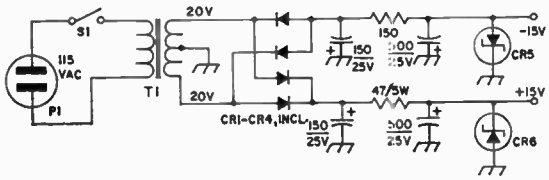

Fig. 4 — Power supply for the adapter. Capacitors are electrolytic. Resistors are 1/2-watt unless otherwise specified.
CR1-CR4, incl. — Silicon type, 200 PRV or greater (Motorola 1N4002, 1N4004 or 1N4007).
CR5, CR6 — 15-volt, 1-watt Zener (Centralab R4128-4, Unitriode Uz715).
P1 — Fused line plug.
S1 — Toggle.
T1 — 40-volt ct, 100 mA (Triad F90X).

Adjustment

1) Connect the scope's vertical input to test point 1.

2) Connect a 2350-Hz signal to the input and adjust the video discriminator coil L1 for minimum indication on the scope. This is usually with the slug fully inserted.

3) Connect the scope to test point 2. Change the input to 1200 Hz and peak the sync discriminator coil L2 for maximum indication on the scope.

4) Make the connections from the adpater to the oscilloscope's external sync, vertical input, and the CRT grid.

5) Connect the adapter's input to the receiver or tape recorder.

6) Set the contrast control at midposition and the sync control to maximum.

7) Adjust the scope's sweep to 15 Hz for trigger lock.

8) Adjust the size of the raster with the scope horizontal and vertical size controls until a square raster is obtained.

9) Adjust the adapter contrast and the scope intensity controls until a clear picture is obtained. If the picture is negative, the connections to the CRT grid should be reversed.

10) When a picture is obtained, the sync control should be adjusted to a point just before sync is lost. This will eliminate false triggering when copying weak signals and, if a vertical sync pulse is missed, the manual trigger can be used.

The finished adapter can be finally tested in several ways:

1) Tune to one of the SSTV frequencies listed below and look for a station transmitting SSTV. Tune the signal as you normally would for ssb. It is a good idea to tape-record a few pictures off the air — they then can be played back as often as necessary while adjusting the adapter.

2) Send a blank recording tape (with return postage) to any amateur who is equipped with an SSTV flying-spot scanner or camera. All amateurs in this field are happy to make a tape to get a newcomer going.

3) Listen to the SSTV frequencies. You may find a nearby amateur is on the air with SSTV. You can take your adapter to his shack to try it directly on a picture generator.

At the present time, most SSTV operation takes place on 20 meters, on or near 14,230 kHz. Local nets operate on 3845 kHz. Stations from practically all continents are to be found on SSTV. The DX capability of SSTV is being demonstrated daily by picture exchanges between U.S. and foreign amateurs.

The slow-scan TV adpater has given good pictures on the scopes tried. A hood should be provided around the CRT face for direct viewing. Scopes with CRT tubes that have an accelerator will provide a brighter scan. The Heath IO-18 scope uses a CRT without the accelerator, and the brightness was noticeably less than others tried.

FACSIMILE

Printed and handwritten material and photography may be sent by facsimile (FAX) transmissions. Transmission and reception are done by electromechanical means. At the transmitting end of the circuit, the page containing the material to be sent is placed around a cylinder or drum. In operation the drum revolves, and is scanned by a very narrow light beam. A photoelectric cell, acting on light picked up from the surface of the material being transmitted, converts the changing light intensities into a changing dc voltage level. This "modulated" dc voltage controls the frequency of a voltage-controlled audio oscillator. Each revolution of the drum provides one scanning line of the material being sent. As the drum revolves, it is slowly moved laterially by a lead screw, causing slight separation of adjacent scanning lines. (In some systems the light beam and pickup mechanism, rather than the drum, are moved laterally to obtain scanning-line separation.) In this manner, the scanning beam is in the form of a helix at the surface of the drum.

At the receiving end of the circuit, the varying-audio-tone information is demodulated in a discriminator type of circuit. The output of the demodulator is a varying or "modulated" dc voltage corresponding to that from the photoelectric cell at the transmitting end. This dc voltage may be used to reproduce a copy of the original material in any of a number of ways. The methods often used employ a voltage-sensitive material, a heat-sensitive material, or a light-sensitive material. In the case of heat- and light-sensitive materials, such material is placed on a revolving drum which is synchronized to the drum of the transmitting machine. The dc voltage is used to vary the intensity of a beam of light directed at the revolving drum. Light-sensitive materials may be developed by ordinary photographic methods. Heat-sensitive materials have the image "burned on" directly from a high-intensity lamp placed close to the material. A voltage-sensitive electrostatic paper changes color at the point where a potential is placed across its thickness, and in this type of system a scanning electrode traverses the drum. Other similar methods employ moist voltage-sensitive paper or other papers where current actually passes from the scanning electrode through the paper to the drum. Many modern facsimile recorders use a "flat paper" process whereby it is not necessary to place the sensitive recording material around a cylinder. Instead, the paper is continuously drawn from a roll across a flat "writing surface," and an electrode moves across this surface in synchronism with the drum revolution speed at the transmitter.

The drum speed, total number of scanning lines, type of recording material used at the receiver, and bandwidth limitation of the transmitted signal all affect the resolution obtainable from the system. With slow drum speeds (in the order of several minutes per picture) and very fine light beams, excellent-quality photographs can be transmitted in a communications-bandwidth channel.

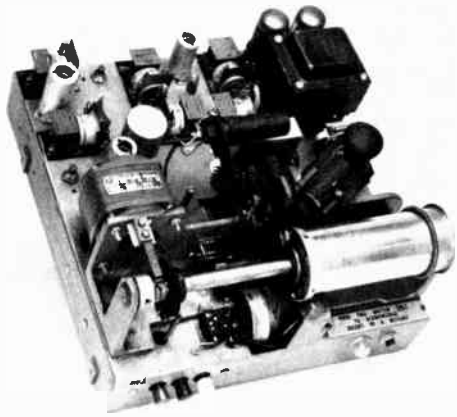

Fig. 15D-2 — The Telefax transceiver with cover removed. The shaft along which the drum traverses is visible at the left of the drum. The photo-optic assembly may be seen on the right-hand side of the chassis, just behind the drum. The lamp and its focusing lens system appear at the right, while the photoelectric cell is housed behind its lens system inside a light shield with appropriate opening.

Fig. 15D-1 — Western Union Telefax transceiver. Some machines of this type have been made available to amateurs. The drum accommodates a sheet of paper measuring approximately 4 1/2 X 6 1/2 inches.

SPACE COMMUNICATIONS

The use of vhf and uhf frequencies for intermediate and long distance communications has become possible through space communications techniques. There are basically two types of systems: passive and active. A passive system uses a celestial object such as the moon or an artificial reflecting satellite to return signals to earth. An active system consists of a space vehicle carrying an electronic repeater.

THE MOON AS A PASSIVE REFLECTOR

Communication by reflecting signals off the lunar surface has drawn the interest of an increasing number of amateurs in recent years, despite the considerable challenge such work represents. The requirements for earth-moon-earth (EME) communication are fairly well known. Overcoming the extremely high path loss of the EME circuit calls for close to the maximum transmitter power output obtainable with one kilowatt input, the best possible receiver, and very large high-gain antennas. The highest practical receiver selectivity is helpful, and visual signal-readout is often employed.

These requirements contribute their own problems. Narrow bandwidth demands exceptional frequency stability and calibration accuracy in both transmitter and receiver. High antenna gain means narrow beamwidth, in a system where a slowly moving target that is often invisible must be hit. And even when all demanding conditions are satisfied, the best one can expect is a signal barely distinguishable in the noise.

But the rewards are considerable, for the EME circuit provides vhf and uhf communications potential for any two points on earth where the moon is above the horizon. A surprising number of amateurs have accepted this supreme challenge, and before the end of 1970, all amateur bands from 144 to 2300 MHz had been employed successfully for lunar communications.

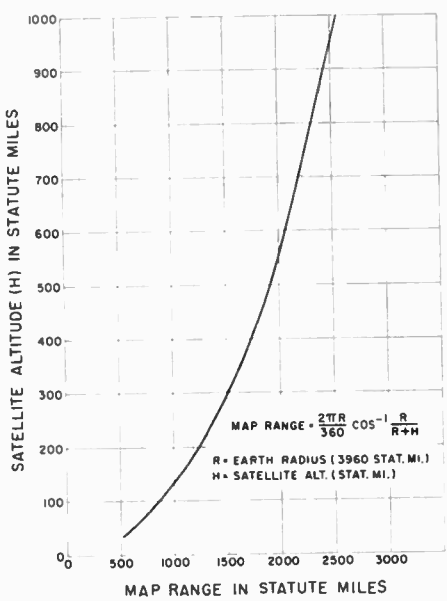

Fig. 15E-1 — Satellite altitude above earth versus ground station map range (statute miles).

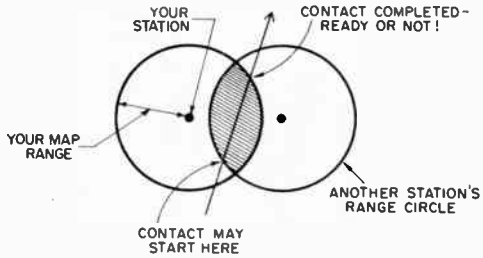

Fig. 15E-2 — Satellite passes through the range of two stations, enabling contact.

SATELLITES

Exciting communications possibilities are afforded through the use of amateur satellites. They function much in the same way as terrestrial repeaters, to relay signals over greater distances than normally feasible. (See chapter 14.) With satellites, the area is usually international in scope. Thus, DX communication on frequencies unable to support ionospheric propagation is possible.

Two amateur communications satellites have been orbited to date. Oscar 3, used in early 1965, was a 144-MHz in-band repeater; Oscar 4, launched in late 1965, repeated 144-MHz signals in the 420-MHz band. Oscars 1, 2, and 5 were beacon satellites for scientific and training purposes.

Current amateur plans for satellite systems involve the use of the 28-, 144-, and 420-MHz bands. Crossband repeaters are favored. Thus, expected combinations might be: 144 uplink, 28 downlink; 420 uplink, 144 downlink; or 144 uplink, 420 downlink. There is a trend toward designing amateur satellites with higher system gains (i.e., higher sensitivity and greater output). The objective is to permit the use of these satellites by average-sized amateur ground stations. Future satellite lifetimes of one year or more can be expected. Effort will be made for successive satellites to utilize similar frequency combinations to alleviate the need for equipment changes in ground stations.

A principal factor in determining how far one can communicate via a particular satellite is the orbit. Higher altitude orbits put the satellite within line-of-sight of greater areas of the earth. Fig. 15E-1 can be used to determine your map range for a satellite according to its altitude. For example, a satellite at 910 miles would give a map range of 2450 miles. For illustration, draw on a map a circle centered on your location with a radius equal to the map range. Each time the satellite is directly over any point within this circle, you will be able to use it for

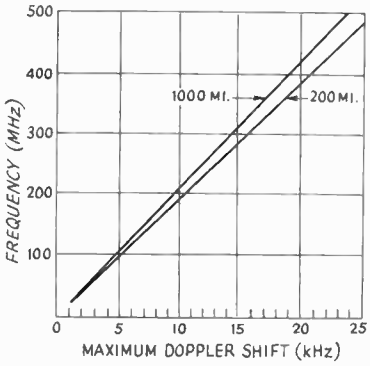

Fig. 15E-3 — Satellite transmitter frequency versus Doppler shift for satellite in 200- or 1000-statute-mile orbits. For a translator, use the difference between uplink and downlink frequencies as the "frequency."

communication. Contact can be made with any other station having the satellite within its range at the same time. This is shown in Fig. 15E-2. Thus, the maximum map distance for communication would be about two times your map range.

The time duration for which a satellite will be within your range depends on two factors: the satellite's altitude and the distance between the subsatellite point (the point on the earth directly below the satellite) and your station. Higher altitude orbits increase the size of your range or acquisition circle, thus providing longer exposure to the satellite. Also, the longest duration for any given altitude will occur on orbits which pass directly over the station location. For example, a satellite in a 1000-mile orbit would be line-of-sight to a ground station for about 25 minutes on an overhead pass. At a map range of 1000 miles the duration would be 20 minutes, and at 2000 miles, availability would be about 10 minutes.

Conventional transceiver-type operation may offer some problems with satellites because of the Doppler phenomenon. Separate frequency control of the ground station's transmitter and receiver is desirable. (In some cases an "incremental tuning" feature on a transceiver will suffice.) Doppler is a frequency-shifting effect resulting from the motion of the satellite. It is a function of the transmitting frequency and the velocity of the satellite relative to the observing station. (Velocity is further a function of satellite's altitude.) Fig. 15E-3 compares Doppler shifts for frequencies up to 500 MHz for satellites and 200- and 1000-statute-mile orbits. The reason why Doppler shift requires a special consideration with transceiver operation is because two stations in contact would go through a series of frequency compensations, thus "walking" themselves across (and perhaps out of) the band! The frequency of a satellite moving toward a ground station appears higher than the actual satellite transmitter frequency. It drops as the satellite nears the ground station. At the exact point of closest approach, the observed frequency will be the same as the true frequency. Past this point, the satellite's signal will continue to drop lower in frequency as the satellite moves away.

There are two types of repeaters likely to be employed in future amateur satellites. A channelized repeater for fm would operate much like the ground-based fm repeaters used by amateurs; one station could use a channel at a time. Several contacts could be accommodated by a multichannel satellite. The other approach is called a frequency translator. It receives a segment of one band, say 100 kHz at 144 MHz, and retransmits the segment on another band, say 28 MHz. With a frequency translator, as many contacts as can be accommodated by the translator's bandwidth can take place simultaneously, and all modes can be used. Doppler shift from the fm repeater would be the same as expected for a transmitter on its downlink frequency. With a translator, however, the amount of Doppler shift is influenced by both the up- and downlinks. By employing a frequency inversion technique in the satellite's design, these amounts of Doppler will subtract; the resulting shift is then found from Fig. 15E-3 by using the frequency difference between up- and downlinks.

An aid to satellite communication is to monitor your own downlink signal coming from the satellite, while you are transmitting. This permits you to avoid interference from other stations, to compensate, where appropriate, for Doppler shift, and to adjust your transmitter power and antenna direction for maximum efficiency in sharing the satellite's output.

Best results in satellite communications are achieved when the ground-station antenna is pointed directly at the satellite. Movement of the antenna in elevation as well as azimuth is necessary. An easier alternative, providing adequate results, is also available. It is the use of a medium-gain antenna (about 10 dB) pointed at a fixed elevation of about 30 degrees and rotatable in azimuth. The beamwidth of such an antenna will

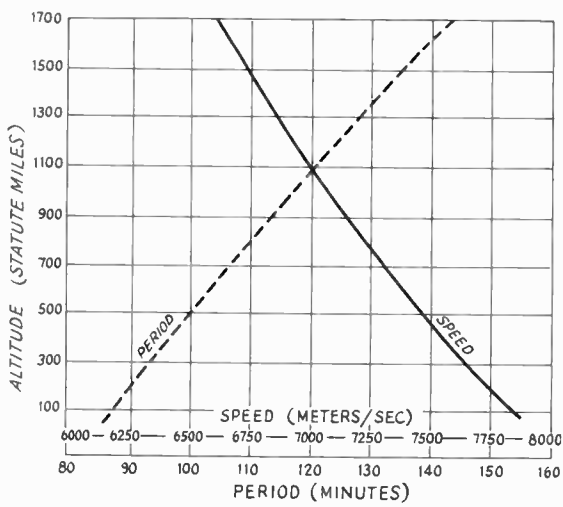

Fig. 15E-4 — Satellite altitude versus its period (time for one revolution) and speed.

allow satisfactory performance with most passes of the satellite. In the case of synchronous satellites, where the spacecraft maintains the same position relative to the observer, even the azimuth rotation can be eliminated – the antenna can be in a fixed position. However, greater antenna gain will most likely be needed in this case to compensate for the greater path loss from a satellite in such a high-altitude orbit.

Another antenna consideration for satellite communication is the use of circular polarization. Because the plane of a wave is rotated as it passes through the ionosphere, cross-polarization can occur between two linearly polarized (i.e., horizontal or vertical) antennas. This is called Faraday rotation. A circularly polarized antenna (such as a crossed-dipole, crossed-yagi, or a helix) at either the ground station or the satellite serves to minimize the effect.

Late Information

QST carries information about recent developments in Oscar. Since ground station requirements are dependent on the bands, modes, etc. used by the satellite, the amateur wishing to become equipped for space communication should consult ARRL headquarters to determine current amateur satellite plans.

PHONE PATCHING

A phone patch is an interconnection made between a radiotelephone system and a wire-line telephone. When the patch is made properly, the radio link and the wire line will effectively extend each other. Phone patches have provided vital communication when a natural disaster has caused disruption of normal communication facilities. More commonly, phone patches permit men in service or on scientific expeditions to talk with their families. Few activities can create a more favorable public image for amateurs than to bring people together in this way. Such public service is always appreciated. Amateurs are using phone patches for their own convenience, too. A phone patch might be used to talk with a friend in a distant city or to make a phone call from a car. In the latter case, a number of clubs are equipping their repeaters with unattended phone patch arrangements.

A few general considerations apply to phone patching. It constitutes the handling of third-party traffic. Agreements between governments specifically permitting such traffic must be in effect if the radio link is to a foreign country. Amateurs are responsible for conforming to regulations on station identification, prohibited language and the like while a phone patch is in progress. If a repeater is involved, the arrangement should meet all applicable rules regarding repeater-control facilities. Telephone companies, too, are concerned that the interconnection arrangements be made in the proper way and that the electrical signals meet certain standards.

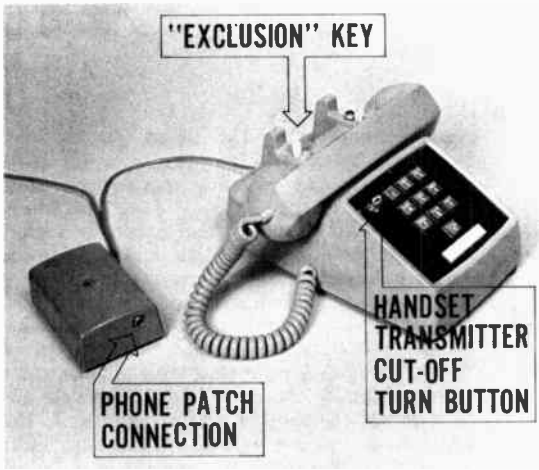

Fig. 15F-1 – The voice coupler, to the left of the touch-tone telephone, is supplied by the telephone company. The coupler is normally fixed to a wall or desk, and contains a jack for connection of the amateur's phone patch.

THE TELEPHONE SYSTEM

Telephone company regulations are published in their tariffs, which in most states must be available in the company's business offices. In the tariffs, phone patches are included under "Interconnection Arrangements" or a similar designation. Telephone employees may not be familiar with the term, "phone patch" so it should be used with caution when talking with them. Patching is accomplished with the aid of devices called "couplers" or "voice connecting arrangements." These are provided by the telephone company and are important in several ways. They protect the amateur's telephone service from interruption that might result from a malfunction in his equipment; they protect other users, too. By isolating the amateur's equipment electrically from the telephone line, they give him a great deal of freedom in the design of his circuits. The protective device also permits proper adjustment of the circuit impedance, energy levels and other operating conditions to be met by the amateur's equipment.

A telephone line normally consists of a single pair of wires which is used for both directions of transmission. At the amateur's station it will be terminated in a telephone set. A voice coupler will be connected in parallel with the telephone set when the phone patch is in progress. For design purposes, the telephone set and line are each assumed to have an impedance of about 900 ohms (in the case of residence service) and the best impedance for the phone-patch circuit is also 900 ohms. In operation, the patch will see a load of about 450 ohms. This small mismatch should not be cause for concern, however, as it is the best

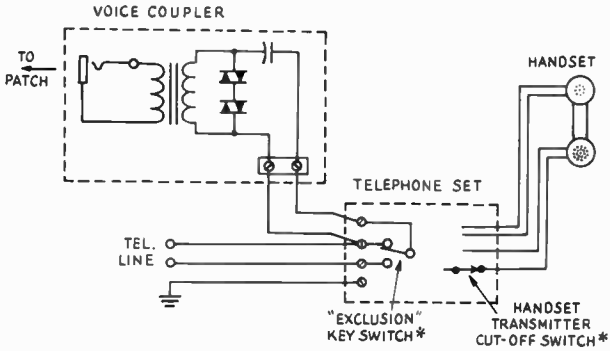

Fig. 15F-2 — Simplified schematic of voice coupler and telephone set. *Both the cutoff switch and the exclusion key switch are shown in their normal positions.

possible compromise. The phone patch's basic function is to connect the radio receiver's audio output circuit and the radio transmitter's audio input circuit to the telephone voice coupler. It should do this in a way that results in correct circuit impedances and voice levels. Provision should be made, too, for measuring and adjusting the voice level that is transmitted to the telephone line and for electrical filtering to the extent needed to comply with telephone company limitations.

Fig. 15F-1 shows a typical voice coupler and a related telephone set. A simplified schematic diagram of this setup is given in Fig. 15F-2. The telephone is equipped with an exclusion key and a turn button. The telephone operates in the usual way when the two switches are in their normal positions. Lifting the exclusion key causes the voice coupler to be connected to the telephone line. If it is requested when the voice coupler is ordered, the turn button will be supplied and can be wired by the telephone company to cut off the handset transmitter, the receiver, or both of them. The *transmitter* cutoff feature is preferred, as it will eliminate the pickup of room noise by the telephone while permitting the patched communication to be monitored on the handset receiver. The operator can restore the turn button as required for station identification or to break in for other purposes.

PHONE PATCH CIRCUITS

Where push-to-talk operation is used, the phone patch can be as simple as a transfer switch (connecting the receiver and the transmitter, alternately, to the coupler) or it can be a resistive combining network.

Hybrid Circuits

Where it is desirable to use voice-operated transmitter control (VOX), more elaborate arrangements are required. The VOX circuit must determine when the distant radio station is transmitting and inhibit the local transmitter. When the party on the land telephone is talking, the VOX circuit must activate the local transmitter. This function is made difficult by the difference in audio levels. The phone patch must transmit a voice level of approximately −5 VU toward the telephone line, whereas the level received from the distant land telephone may range from −45 VU to −10 VU.[1] The contrast in levels can be reduced considerably at the input to the local transmitter's VOX circuit by using a "hybrid" circuit. A hybrid circuit is an electrical network connecting together the transmitter, receiver and the voice coupler in such a way that the audio energy from the receiver is canceled at the input to the transmitter. Hybrids require a fourth circuit element, called a balancing network, in order to function.

1 Volume units (VU) are measured with an instrument which is basically an ac voltmeter of appropriate range and with dynamic characteristics which are carefully controlled to provide standardized measurement of complex wave forms. When sine-wave power is measured, a VU meter and one calibrated in dB relative to a milliwatt (dBm) should give the same numerical indication.

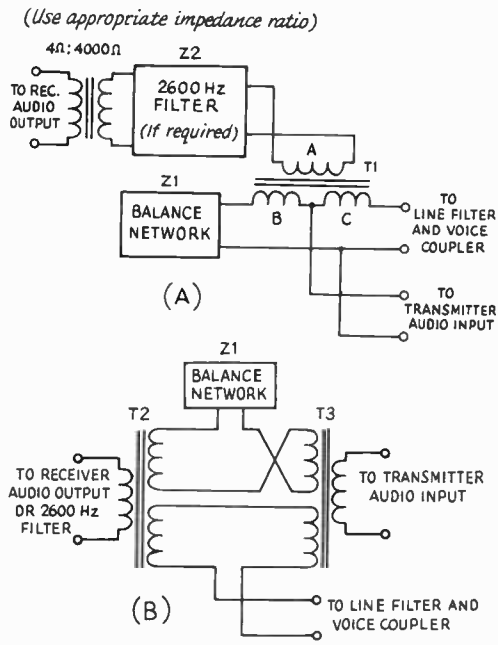

Fig. 15F-3 At A — Hybrid circuit made with a single audio transformer. At B — Two transformers in a hybrid circuit yield excellent isolation. Impedance-matching transformers may be required in the receiver and transmitter branches at B.

T1 — Windings designated "B" and "C" should be of about 900 ohms impedance each. Winding "A" may be of higher impedance if the 2600-Hz filter is used; a lower impedance may be used to match the receiver if a 2600-Hz filter is not needed.

T2, T3 — Audio, 1:1:1 impedance, rated at 1 mW or more.

Z1 — Balancing network. See Fig. 15F-4 and text.

Z2 — 2600-Hz filter. See Fig. 15F-5 and text.

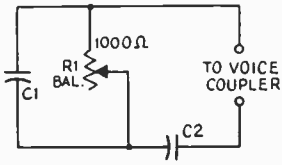

Fig. 15F-4 — Balancing network. R1 is a wire-wound control. C1 and R1 should balance a voice coupler; typical values are 470 ohms and .04 μF. C2 is ordinarily not used, but values in the order of 1 to 4 μF may be required with unattended interconnection devices.

Several kinds of hybrids can be constructed, the simplest of which is an adaptation of the Wheatstone bridge. When the bridge is balanced, the amount of audio from the receiver that reaches the transmitter (or VOX circuit) will then be minimized. The loss between the receiver and the transmitter should be 25 dB or more. The greatest loss will be realized at some single frequency in the voice band, but this loss will be difficult to measure. That is because the bridge must be balanced with a connection established to another telephone and some energy will be reflected from the distant telephone set.

The balancing network, shown schematically in Fig. 15F-4, is not complicated. In most cases it will consist only of a resistor and a capacitor in parallel. Typical values for a condition of balance when a voice coupler is used would be 470 ohms for R1 and .04 μF for C1. Other interface devices, such as might be used at repeaters for unattended operation, will require other values. The resistance might be between 500 and 1200 ohms and the shunt capacitance might range from .01 to 0.1 μF; in rare cases, a series capacitor in the order of 2 μF may be required. The values for a particular installation must be found by trial. The hybrid can be balanced by establishing a telephone call, and tuning in a clear voice signal on the receiver. With headphones connected to the transmitter audio circuit, adjust the hybrid balance network for minimum signal in the headset.

The transformer-type hybrid circuits of Fig. 15F-3 exhibit lower losses than the Wheatstone bridge circuit. With a transformer the loss in the desired paths will be 4.5 to 6 dB, whereas losses are in the order of 6 to 10 dB in a balanced bridge circuit. A circuit for a single-transformer hybrid is shown in Fig. 15F-3A, while a two-transformer arrangement (giving better isolation between elements) is shown at B. For the home constructor, good transformers to use are the surplus "telephone repeating coils" that are offered from time to time by several suppliers. Transistor-type transformers can also be used with excellent results as long as they are capable of handling one or two milliwatts of audio power without distortion.

TABLE I

Maximum Permissible Energy Levels at the Input of a Voice Interconnection Arrangement

Freq. Band	*Maximum Level*
Direct current	0.5 milliampere
Voice range (nominally 300 to 3000 Hz)	Voice coupler: 7.5 dB below 1 volt. Other arrangements: 9 dB below 1 mW (levels averaged over 3 seconds, see note.)
2450 to 2750 Hz	Preferably no energy; in no case greater than the level present simultaneously in the 800- to 2450-Hz band.
3995 to 4005 Hz	18 dB below the voice-band level.
4.0 to 10.0 kHz	16 dB below one milliwatt (-16 dBm).
10.0 to 25.0 kHz	-24 dBm
25.0 to 40.0 kHz	-36 dBm
Above 40.0 kHz	-50 dBm

NOTE: The above limits should be met with amateur-provided equipment having an internal impedance of 900 ohms if it is to work into a voice coupler, or 600 ohms if other arrangements are to be used.

Filters

Standards have been established for the maximum signal levels that can be connected to the input of a coupler or other interconnection device. They are listed in Table I. The limits of out-of-band energy are best met by using a low-pass line filter. Located between the coupler and the hybrid it will protect the line and also band-limit line signals to the transmitter. Filters of several types (image parameter, elliptic function, and so on) may be used. The filter should be a 600- or 900-ohm impedance (depending on the interface), passing frequencies below 3 kHz with losses rising rapidly above that point; a rejection notch should be provided at 4 kHz.

A form of 2600-Hz rejection filter is shown in Fig. 15F-5; its best location is at the receiver's output if patched calls are made to telephone offices distant from your own. The telephone system uses that frequency in the long distance network as a "disconnect" signal. The need for filtering at that frequency can best be judged by experience; the filter can be made switchable, if desired.

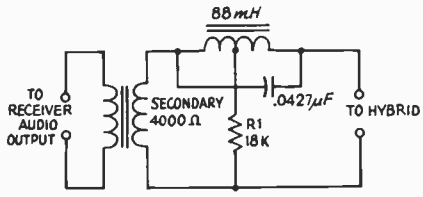

Fig. 15F-5 — 2600-Hz filter.
R1 — 18-kΩ nominal; adjust value for best 2600-Hz rejection.

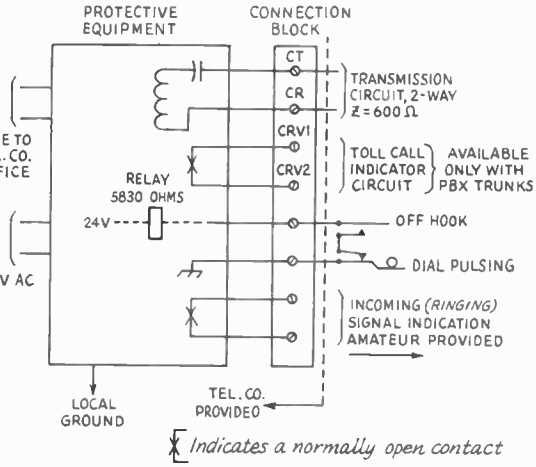

Fig. 15F-6 — Interconnection diagram for a Bell CD8 coupler, representative of connections to unattended interface devices.

REPEATER PATCHES

Some interesting phone-patch possibilities exist at repeaters. Unattended interconnection devices are associated with the repeaters to provide a form of mobile telephone service for the clubs operating them. The connections to a typical unattended interface device are shown in Fig. 15F-6.

Suitable signals generated in mobile units work through a base station to activate the interconnection device, causing it to connect and pass dial pulses to the telephone line. The system may be arranged so that the base transmitter carries both sides of the conversation or only the voice of the distant telephone user. Switching of the patch's voice path between the transmitter and the receiver could be done under the control tones of a carrier-operated relay. A simple combining circuit may be used if both sides of the conversation are to be put out over the air. To equalize audio levels, a wide-range agc amplifier might have to be provided, or an attenuator in the transmitter audio line would have to be switched in and out. A hybrid circuit could be used in this case but the retransmitted audio from the mobile unit would not be as free from distortion as with the combining arrangement.

A METER FOR MEASURING VOICE LEVELS

The maximum speech level that may be applied to a voice coupler for phone patching is 7.5 dB below 1 volt, averaged over a three-second period. The measurement should be made at the input to a voice coupler whenever a patched call is in progress. The level can be measured conveniently by modifying a Calectro model DI-930 "VU" meter (see Figs. 1 and 2). The existing 7-kΩ multiplier resistor must be replaced by a 365-ohm 1-percent precision resistor. In addition, damping capacitance

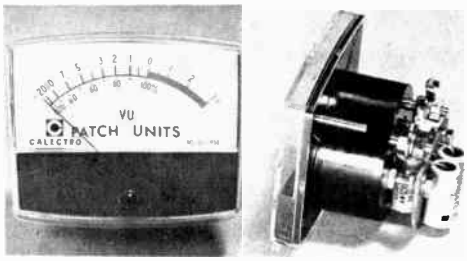

Fig. 1 — The modified VU meter for measuring receiver speech levels applied to the voice coupler. The changes made to the meter make it act quite unlike a VU meter, and as a precaution against misinterpretation, a special legend has been added to the meter scale as shown at the left. At the right is the assembly after modification. The three 100-μF capacitors are affixed to a small piece of etched circuit board which is supported on the case by added terminal screws. The multiplier resistor for the meter is located inside the case.

of 300 μF must be connected to the meter coil, observing proper polarity. These values apply only to this particular make and model of meter. The modified meter responds to speech signals of 3 kHz or less in a way that compares very closely with the measuring sets mentioned in the Bell interface specifications. Error should be less than 1 dB and should be found to be on the safe side. The meter, as modified, has a 1-kHz impedance of approximately 6500 ohms. It should be mounted only on a nonferrous panel.

Using the Meter

In use at an attended station the meter should be left connected to the input of the voice coupler whenever a patch is in progress. The speech level should never be permitted to exceed the ZERO or "100%" point on the meter scale. When the telephone connection is made to a nearby point (such as a line served out of the same telephone building as the patched line), the distant listener will receive a more comfortable listening level if the maximum signal is held to about −7 on the

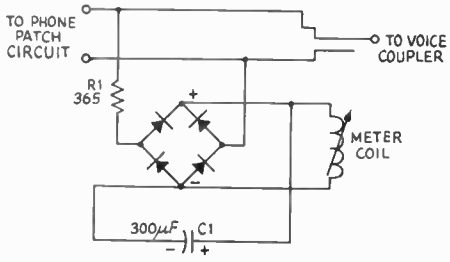

Fig. 2 — Schematic diagram of the modified Calectro DI-930 meter and its connection to a phone-patch circuit.
R1 — 365-ohm 1-percent precision resistor; replaces original 7-kΩ resistor.
C1 — Added capacitance; 3 100-μF capacitors of 1- to 10-V rating connected in parallel.

meter scale. Remember, too, that if the distant telephone user is not talking loudly enough for good modulation of a transmitter, he can often be made to speak louder simply by *reducing* the level of audio *being sent to him.*

At repeaters or other installations which use unattended interconnection arrangements, lower levels are required. With the meter modified as described above, the maximum voice level should not exceed –5. The measurement should be made with the patch circuit and the meter connected to a 600-ohm resistive load. The meter should not be left connected to the patch when patched calls are in progress.

APPENDIX

Signals and Circuit Conditions Used in the Telephone System

1) The status of a local telephone line (idle or busy) is indicated by on-hook or off-hook signals as follows:

On-Hook – Minimum dc resistance between tip and ring conductors of 30,000 ohms.

Off-Hook – Maximum dc resistance between tip and ring conductors of 200 ohms.

Telephone sets give an off-hook condition at all times from the answer or origination of a call to its completion. The only exception to this is during dial pulsing.

2) Dial pulses consist of momentary opens in the loop; dial pulses should meet the following standards:

Pulse rate	10 pulses per second ±10 percent
Pulse shape	58 percent to 64 percent break (open)
Interdigital time	600 milliseconds minimum

Note: Two pulses indicate the digit "2," three pulses indicate the digit "3," and so on, up to ten, indicating the digit "0."

3) The standards for tone "dialing" are as follows: Each digit is represented by a unique pair of tones as shown below.

Digit	*Low Tone*	*High Tone*	*Digit*	*Low Tone*	*High Tone*
1	697 and	1209 Hz	7	852 and	1209 Hz
2	697 and	1336 Hz	8	852 and	1336 Hz
3	697 and	1477 Hz	9	852 and	1477 Hz
4	770 and	1209 Hz	0	941 and	1336 Hz
5	770 and	1336 Hz	*	941 and	1209 Hz
6	770 and	1477 Hz	#	941 and	1477 Hz

Bibliography

Source material and more extended discussions of topics covered in this chapter can be found in the references given below. This listing does not include every article published in *QST* on the subjects of this chapter, however. A detailed bibliography of references in *QST* on any of the subjects amateur television, slow-scan television, radioteletype, phone patching, Oscar and moonbounce, will be sent on request to ARRL, Newington, CT 06111. Please enclose a business-size stamped self-addressed envelope.

RADIOTELETYPE

Antanaitis, "A Simple Two-Transistor A.F.S.K. Generator," *QST*, September, 1969.

Craig, "Teleprinter Selector Magnets," Technical Correspondence, *QST*, September, 1971.

Hall, "Frequency Shift Keying the Johnson Ranger, Valiant, Navigator," *RTTY Journal*, Jan. 1968; "What is RTTY?," *QST*, Dec. 1968.

Hoff, "Transmitting Radioteletype," *QST* May, 1965; "Audio Frequency-Shift Keying for RTTY," *QST*, June 1965; "The Mainline ST-3 RTTY Demodulator," *QST*, April 1970.

Petersen, "The Mainline TT/L-2 F.S.K. Demodulator," Part I, "Construction and Adjustment," *QST*, May, 1969, and Part II, "Circuit Description, and the Mainline F.S.K. Keyer," *QST*, June, 1969.

Schecter, "First Steps in RTTY," *QST*, June, 1971.

AMATEUR TELEVISION

Campbell, "Amateur TV – The Easy Way," *QST*, November, 1962.

Keller, "An Amateur Television Camera," *QST*, November, 1953.

Tilton, "Amateur Television – A Progress Report," *QST*, June, 1950.

SLOW-SCAN TELEVISION

Briles and Gervenack, "Slow-Scan TV Viewing Adapter for Oscilloscopes," *QST*, June, 1970.

Macdonald, "S.C.F.M. – An Improved System for Slow-Scan Image Transmission," Part I, "Slow-Scan Modulation Tests and Proposed Standards," *QST*, Jan. 1961, and Part II, "Circuit Details," *QST*, Feb. 1961; "A New Narrow-Band Image Transmission System," Part I, "Principles of Slow Scan Picture Reproduction," *QST*, August 1958, and Part II, "Circuit and Construction Details," *QST*, Sept. 1958; "A Slow-Scan Vidicon Camera," in three parts, *QST*, June, July and Aug. 1965.

Tschannen, "A Solid-State SSTV Monitor," *QST*, March, 1971.

PHONE PATCHING

Berry, "Legalize Your Phone Patch," *QST*, May 1969; "An Improved Phone Patch," Hints and Kinks, *QST*, Nov. 1970.

Hoff, "Stopping Telephone Interference," *QST*, March, 1968.

Schleicher, "Phone Patching – Legitimately," *QST*, March 1969; "Phone Patching – One Year Later," *QST*, Nov. 1970; private correspondence and previously unpublished information. "Phone Patching – Level Measurements.

Chapter 16

Interference with other Services

Every amateur has the obligation to make sure that the operation of his station does not, because of any shortcomings in equipment, cause interference with other radio and audio services. It is unfortunately true that much of the interference that amateurs cause to broadcast and television reception is directly the fault of bc, hi-fi, and TV receiver construction. Nevertheless, the amateur can and should help to alleviate interference even though the responsibility for it does not lie with him.

Successful handling of interference cases requires winning the listener's cooperation. Here are a few pointers on how to go about it.

Clean House First

The first step obviously is to make sure that the transmitter has no radiations outside the bands assigned for amateur use. The best check on this is your own a-m or TV receiver. It is always convincing if you can demonstrate that you do not interfere with reception in your own home.

Don't Hide Your Identity

Whenever you make equipment changes – or shift to a hitherto unused band or type of emission – that might be expected to change the interference situation, check with your neighbors. If no one is experiencing interference, so much the better; it does no harm to keep the neighborhood aware of the fact that you are operating without bothering anyone.

Should you change location, announce your presence and conduct occasional tests on the air, requesting anyone whose reception is being spoiled to let you know about it so steps may be taken to eliminate the trouble.

Act Promptly

The average person will tolerate a limited amount of interference, but the sooner you take steps to eliminate it, the more agreeable the listener will be; the longer he has to wait for you, the less willing he will be to cooperate.

Present Your Story Tactfully

When you interfere, it is natural for the complainant to assume that your transmitter is at fault. If you are certain that the trouble is not in your transmitter, explain to the listener that the reason lies in the receiver design, and that some modifications may have to be made in the receiver if he is to expect interference-free reception.

Arrange for Tests

Most listeners are not very competent observers of the various aspects of interference. If at all possible, enlist the help of another amateur and have him operate your transmitter while you see for yourself what happens at the affected receiver.

In General

In this "public relations" phase of the problem a great deal depends on your own attitude. Most people will be willing to meet you half way, particularly when the interference is not of long standing, if you as a person make a good impression. Your personal appearance is important. So is what you say about the receiver – no one takes kindly to hearing his possessions derided. If you discuss your interference problems on the air, do it in a constructive way – one calculated to increase listener cooperation, not destroy it.

INTERFERENCE WITH STANDARD BROADCASTING

Interference with a-m broadcasting usually falls into one or more rather well-defined categories. An understanding of the general types of interference will avoid much cut-and-try in finding a cure.

Transmitter Defects

Out-of-band radiation is something that must be cured at the transmitter. Parasitic oscillations are a frequently unsuspected source of such radiations, and no transmitter can be considered satisfactory until it has been thoroughly checked for both low- and high-frequency parasitics. Very often parasitics show up only as transients, causing key clicks in cw transmitters and "splashes" or "burps" on modulation peaks in a-m transmitters. Methods for detecting and eliminating parasitics are discussed in the transmitter chapter.

In cw transmitters the sharp make and break that occurs with unfiltered keying causes transients that, in theory, contain frequency components through the entire radio spectrum. Practically, they are often strong enough in the immediate vicinity of the transmitter to cause serious interference to broadcast reception. Key clicks can be eliminated by the methods detailed in the chapter on keying.

Non-linear operation of the final amplifier in an

ssb transmitter, or overmodulation in an a-m transmitter can cause transients similar to key clicks. It is important that either of these types of transmitters should be tuned up properly to avoid the generation of such spurious signals. In the case of ssb operation, the interference will not be intelligible at the bc set. A-m operation can produce readable interference. Methods for checking for correct operation of an ssb or a-m transmitter are described in Chapters 12 and 13, respectively.

BCI is frequently made worse by radiation from the power wiring or the rf transmission line. This is because the signal causing the interference, in such cases, is radiated from wiring that is nearer the broadcast receiver than the antenna itself. Much depends on the method used to couple the transmitter to the antenna, a subject that is discussed in the chapters on transmission lines and antennas. If it is at all possible the antenna itself should be placed so that it is not in close proximity to house wiring, telephone and power lines, and similar conductors.

The BC Set

Most present day receivers use solid-state active components, rather than tubes. A large number of the receivers in use are battery powered. This is to the amateur's advantage because much of the bc interference an amateur encounters is because of ac line pickup. In the case where the bc receiver is powered from the ac line, whether using tube or solid-stage components, the amount of rf pickup must be reduced or eliminated. A line filter such as is shown in Fig. 16-1 often will help accomplish this. The values used for the coils and capacitors are in general not critical. The effectiveness of the filter may depend considerably on the ground connection used, and it is advisable to use a short

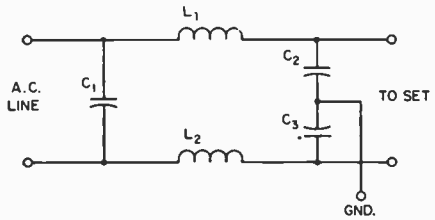

Fig. 16-1 — "Brute-force" ac line filter for receivers. The values of C1, C2 and C3 are not generally critical; capacitances from .001 to .01 μF can be used. L1 and L2 can be a 2-inch winding of No. 18 enameled wire on a half-inch diameter form. In making up such a unit for use external to the receiver, make sure that there are no exposed conductors to offer a shock hazard.

ground lead to a cold-water pipe if at all possible. The line cord from the set should be bunched up, to minimize the possibility of pick-up on the cord. It may be necessary to install the filter inside the receiver, so that the filter is connected between the line cord and the set wiring, in order to get satisfactory operation.

Cross-Modulation

With phone transmitters, there are occasionally cases where the voice is heard whenever the broadcast receiver is tuned to a bc station, but there is no interference when tuning between stations. This is cross-modulation, a result of rectification in one of the early stages of the receiver. Receivers that are susceptible to this trouble usually also get a similar type of interference from regular broadcasting if there is a strong local bc station and the receiver is tuned to some *other* station.

The remedy for cross modulation in the receiver is the same as for images and oscillator-harmonic response – reduce the strength of the amateur signal at the receiver by means of a line filter.

The trouble is not always in the receiver, since cross modulation can occur in any nearby rectifying circuit – such as a poor contact in water or steam piping, gutter pipes, and other conductors in the strong field of the transmitting antenna – external to both receiver and transmitter. Locating the cause may be difficult, and is best attempted with a battery-operated portable broadcast receiver used as a "probe" to find the spot where the interference is most intense. When such a spot is located, inspection of the metal structures in the vicinity should indicate the cause. The remedy is to make a good electrical bond between the two conductors having the poor contact.

Handling BCI Cases

Assuming that your transmitter has been checked and found to be free from spurious radiations, get another amateur to operate your station, if possible, while you make the actual check on the interference yourself. The following procedure should be used.

Tune the receiver through the broadcast band, to see whether the interference tunes like a regular bc station. If so, image or oscillator-harmonic response is the cause. If there is interference only when a bc station is tuned in, but not between stations, the cause is cross modulation. If the interference is heard at all settings of the tuning dial, the trouble is pickup in the audio circuits. In the latter case, the receiver's volume control may or may not affect the strength of the interference, depending on the means by which your signal is being rectified.

Having identified the cause, explain it to the set owner. It is a good idea to have a line filter with you, equipped with enough cord to replace the set's line cord, so it can be tried then and there. If it does not eliminate the interference, explain to the set owner that there is nothing further that can be done without modifying the receiver. Recommend that the work be done by a competent service technician, and offer to advise the service man on the cause and remedy. Don't offer to work on the set yourself, but if you are asked to do so use your own judgment about complying; set owners sometimes complain about the overall performance of the receiver afterward, often

without justification. If you work on it, take it to your station so the effect of changes you make can be seen. Return the receiver promptly when you have finished.

HI-FI INTERFERENCE

Since the introduction of stereo and high-fidelity receivers, interference to this type of home-entertainment device has become a severe problem for amateurs. Aside from placing the amateur antenna as far as possible from any hi-fi installation, there is little else that can be done at the amateur's ham shack. Most of the hi-fi gear now being sold has little or no filtering to prevent rf interference. In other words, corrective measures must be done at hi-fi installation.

Step number one is to try and determine how the interference is getting into the hi-fi unit. If the volume control has no effect on the level of interference or very slight effect, the audio rectification of the amateur signal is taking place past the volume control, or on the output end of the amplifier. This is by far the most common type. It usually means that the amateur signal is being picked up on the speaker leads, or possibly on the ac line, and is then being fed back into the amplifier.

Experience has shown that most of the rf gets into the audio system via the speaker leads or the ac line, mostly the speaker leads. The amateur may find that on testing, the interference will only show up on one or two bands, or all of them. In hi-fi installations speakers are sometimes set up quite some distance from the amplifier. If the speaker leads happen to be resonant near an amateur band in use, there is likely to be an interference problem. The speaker lead will act as a resonant antenna and pick up the rf. One easy cure is to bypass the speaker terminals at the amplifier chassis. Use .01- to .03-μF disk capacitors from the speaker terminals directly to chassis ground; see Fig. 16-2. Try .01 μF and see if that does the job. In some amplifiers .03 μF are required to eliminate

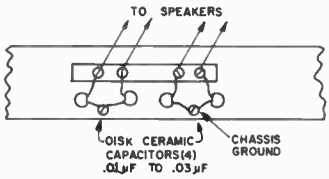

Fig. 16-2 — The disk capacitors should be mounted directly between the speaker terminals and chassis ground, keeping the leads as short as possible.

the rf. Be sure to install bypasses on *all* the speaker terminals. In some instances, it may appear that one of each of the individual speaker terminals are grounded to the chassis. However, some amplifiers have the speaker leads above ground on the low side, for feedback purposes. If you have a circuit diagram of the amplifier you can check, but in the absence of a diagram, bypass all the terminals. If

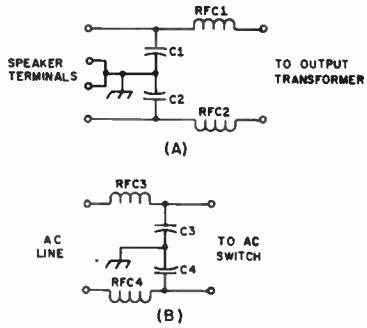

Fig. 16-3 — At A, the method for additional speaker filter, and at B, filtering the ac-line input. In both cases, these installations should be made directly inside the amplifier chassis, keeping the leads as short as possible.
C1,C2 — .01-to .03-μF disk ceramic.
C3, C4 — .01 disk ceramic, ac type.
RFC1 through RFC4 — 24 turns No. 18 enamel-covered wire, close-spaced and wound on a 1/4-inch diameter form (such as a pencil).

you can get into the amplifier, you can use the system shown in Fig. 16-3A.

In this system, two rf chokes are installed in series with the speaker leads from the output transformers, or amplifier output, to the speakers. These chokes are simple to make and help keep rf out of the amplifier. In particularly stubborn cases, shielded wire can be used for the speaker leads, grounding the shields at the amplifier chassis, and still using the bypasses on the terminals. When grounding, all chassis used in the hi-fi installation should be bonded together and connected to a good earth ground (such as a water pipe) if at all possible. It has been found that grounding sometimes eliminates the interference. On the other hand, don't be discouraged if grounding doesn't appear to help. Even with the bypassing and filtering grounding may make the difference.

Fig. 16-3B shows the method for filtering the ac line at the input of the amplifier chassis. The choke dimensions are the same as those given in Fig. 16-3A. Be sure that the bypasses are rated for ac because the dc types have been known to short out.

Fig. 16-4 shows the method for lead filtering the input circuits of an amplifier, such as the record-player input. Keep all leads as short as possible to reduce the possibility of rf pickup.

Antenna Pickup

If the hi-fi setup includes an fm installation, and many of them do, there is the possibility of rf getting into the audio equipment by way of the fm antenna. Chances for this method of entry are very good and precautions should be taken here to prevent the rf from getting to the equipment. A TV-type high-pass filter can prove effective in some cases.

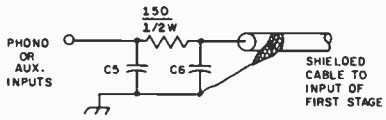

Fig. 16-4 — Method for filtering phono or auxiliary input leads. The filter circuit should be mounted directly inside the chassis at the terminal. Use short leads wherever possible.
C5, C6 — 150-pF mica capacitors.

MISCELLANEOUS TYPES OF INTERFERENCE

The operation of amateur phone transmitters occasionally results in interference on telephone lines and in audio amplifiers used in public-address work. The cause is rectification of the signal in an audio circuit.

Telephone Interference

Telephone interference can be cured by connecting a bypass capacitor (about .001 μF) across the microphone unit in the telephone handset. The telephone companies have capacitors for this purpose. When such a case occurs, get in touch with the repair department of the phone company, giving the particulars. Section 500-150-100 of the Bell System Practices *Plant Series* gives detailed instructions. Do not try to work on the telephone yourself. A special model of the 500 telephone set is available which has built-in rf-protection devices.

Public-Address Systems

In interference to public-address installations the principal sources of signal pickup are the ac line or a line from the power amplifier to a speaker. All amplifier units should be bonded together and connected to a good ground such as a cold-water pipe. Make sure that the ac line is bypassed to chassis in each unit with capacitors of about .01 μF at the point where the line enters the chassis. The speaker line similarly should be bypassed to the amplifier chassis with about .01 μF.

If these measures do not suffice, the shielding on the amplifiers may be inadequate. A shield cover and bottom pan should be installed in such cases.

The spot in the system where the rectification is occurring often can be localized by seeing if the interference is affected by the volume control setting; if not, the cause is in a stage following the volume control.

TELEVISION INTERFERENCE

Interference with the reception of television signals usually presents a more difficult problem than interference with a-m broadcasting. In BCI cases the interference almost always can be attributed to deficient selectivity or spurious responses in the bc receiver. While similar deficiencies exist in many television receivers, it is also true that amateur transmitters generate harmonics that fall inside many or all television channels. These spurious radiations cause interference that ordinarily cannot be eliminated by anything that may be done at the receiver, so must be prevented at the transmitter itself.

The overall situation is further complicated by the fact that television broadcasting is in three distinct bands, two in the vhf region and one in the uhf.

VHF TELEVISION

For the amateur who does most of his transmitting on frequencies below 30 MHz, the TV band of principal interest is the low vhf band between 54 and 88 MHz. If harmonic radiation can be reduced to the point where no interference is caused to Channels 2 to 6, inclusive, it is almost certain that any harmonic troubles with channels above 174 MHz will disappear also.

The relationship between the vhf television channels and harmonics of amateur bands from 14 through 28 MHz is shown in Fig. 16-5. Harmonics of the 7- and 3.5-MHz bands are not shown because they fall in every television channel. However, the harmonics above 54 MHz from these bands are of such high order that they are usually rather low in amplitude, although they may be strong enough to interfere if the television receiver is quite close to the amateur transmitter. Low-order harmonics – up to about the sixth – are usually the most difficult to eliminate.

Of the amateur vhf bands, only 50 MHz will have harmonics falling in a vhf television channel (channels 11, 12 and 13). However, a transmitter for any amateur vhf band may cause interference if it has multiplier stages either operating in or having harmonics in one or more of the vhf TV channels. the rf energy on such frequencies can be radiated directly from the transmitting circuits or coupled by stray means to the transmitting antenna.

Frequency Effects

The degree to which transmitter harmonics or other undesired radiation actually in the TV channel must be suppressed depends principally on

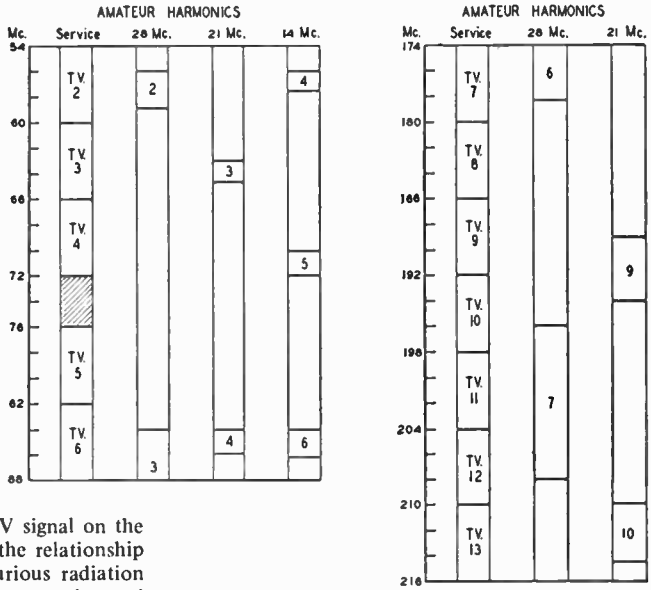

Fig. 16-5 — Relationship of amateur-band harmonics to vhf TV channels. Harmonic interference from transmitters operating below 30 MHz is likely to be serious in the low-channel group (54 to 88 MHz).

two factors, the strength of the TV signal on the channel or channels affected, and the relationship between the frequency of the spurious radiation and the frequencies of the TV picture and sound carriers within the channel. If the TV signal is very strong, interference can be eliminated by comparatively simple methods. However, if the TV signal is very weak, as in "fringe" areas where the received picture is visibly degraded by the appearance of set noise or "snow" on the screen, it may be necessary to go to extreme measures.

In either case the intensity of the interference depends very greatly on the exact frequency of the interfering signal. Fig. 16-6 shows the placement of the picture and sound carriers in the standard TV channel. In Channel 2, for example, the picture carrier frequency is 54 + 1.25 = 55.25 MHz and the sound carrier frequency is 60 – 0.25 = 59.75 MHz. The second harmonic of 28.010 kHz (56,020 kHz or 56.02 MHz) falls 56.02 – 54 = 2.02 MHz above the low edge of the channel and is in the region marked "Severe" in Fig. 16-6. On the other hand, the second harmonic of 29,500 kHz (59,000 kHz or 59 MHz) is 59 – 54 = 5 MHz from the low edge of the channel and falls in the region marked "Mild." Interference at this frequency has to be about 100 times as strong as at 56,020 kHz to cause effects of equal intensity. Thus an operating frequency that puts a harmonic near the picture carrier requires about 40 dB more harmonic suppression in order to avoid interference, as compared with an operating frequency that puts the harmonic near the upper edge of the channel.

For a region of 100 kHz or so either side of the sound carrier there is another "Severe" region where a spurious radiation will interfere with reception of the sound program and this region also should be avoided. In general, a signal of intensity equal to that of the picture carrier will not cause noticeable interference if its frequency is in the "Mild" region shown in Fig. 16-6, but the same intensity in the "Severe" region will utterly destroy the picture.

Interference Patterns

The visible effects of interference vary with the type and intensity of the interference. Complete "blackout," where the picture and sound disappear completely, leaving the screen dark, occurs only when the transmitter and receiver are quite close together. Strong interference ordinarily causes the picture to be broken up, leaving a jumble of light and dark lines, or turns the picture "negative" – the normally white parts of the picture turn black and the normally black parts turn white. "Cross-hatching" – diagonal bars or lines in the picture – accompanies the latter, usually, and also represents the most common type of less severe interference. The bars are the result of the beat

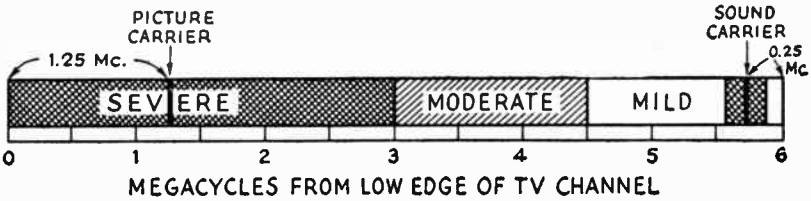

Fig. 16-6 — Location of picture and sound carriers in a monochrome television channel, and relative intensity of interference as the location of the interfering signal within the channels is varied without changing its strength. The three regions are not actually sharply defined as shown in this drawing, but merge into one another gradually.

Fig. 16-7 — "Cross-hatching," caused by the beat between the picture carrier and an interfering signal inside the TV channel.

between the harmonic frequency and the picture carrier frequency. They are broad and relatively few in number if the beat frequency is comparatively low – near the picture carrier – and are numerous and very fine if the beat frequency is very high – toward the upper end of the channel. Typical cross-hatching is shown in Fig. 16-7. If the frequency falls in the "Mild" region in Fig. 16-6 the cross-hatching may be so fine as to be visible only on close inspection of the picture, in which case it may simply cause the apparent brightness of the screen to change when the transmitter carrier is thrown on and off.

Whether or not cross-hatching is visible, an amplitude-modulated transmitter may cause "sound bars" in the picture. These look about as shown in Fig. 16-8. They result from the variations in the intensity of the interfering signal when modulated. Under most circumstances modulation bars will not occur if the amateur transmitter is frequency- or phase-modulated. With these types of modulation the cross-hatching will "wiggle" from side to side with the modulation.

Except in the more severe cases, there is seldom any effect on the sound reception when interference shows in the picture, unless the frequency is quite close to the sound carrier. In the latter event the sound may be interfered with even though the picture is clean.

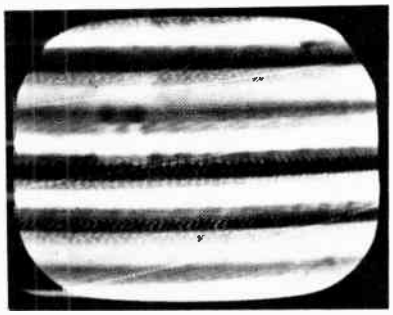

Fig. 16-8 — "Sound bars" or "modulation bars" accompanying amplitude modulation of an interfering signal. In this case the interfering carrier is strong enough to destroy the picture, but in mild cases the picture is visible through the horizontal bars. Sound bars may accompany modulation even though the unmodulated carrier gives no visible cross-hatching.

Reference to Fig. 16-5 will show whether or not harmonics of the frequency in use will fall in any television channels that can be received in the locality. It should be kept in mind that not only harmonics of the final frequency may interfere, but also harmonics of any frequencies that may be present in buffer or frequency-multiplier stages. In the case of 144-MHz transmitters, frequency-multiplying combinations that require a doubler or tripler stage to operate on a frequency actually in a low-band vhf channel in use in the locality should be avoided.

Harmonic Suppression

Effective harmonic suppression has three separate phases:

1) Reducing the amplitude of harmonics generated in the transmitter. This is a matter of circuit design and operating conditions.

2) Preventing stray radiation from the transmitter and from associated wiring. This requires adequate shielding and filtering of all circuits and leads from which radiation can take place.

3) Preventing harmonics from being fed into the antenna.

It is impossible to build a transmitter that will not generate *some* harmonics, but it is obviously advantageous to reduce their strength, by circuit design and choice of operating conditions, by as large a factor as possible before attempting to prevent them from being radiated. Harmonic radiation from the transmitter itself or from its associated wiring obviously will cause interference just as readily as radiation from the antenna, so measures taken to prevent harmonics from reaching the antenna will not reduce TVI if the transmitter itself is radiating harmonics. But once it has been found that the transmitter itself is free from harmonic radiation, devices for preventing harmonics from reaching the antenna can be expected to produce results.

REDUCING HARMONIC GENERATION

Since reasonably efficient operation of rf power amplifiers always is accompanied by harmonic generation, good judgment calls for operating all frequency-multiplier stages at a very low power level. When the final output frequency is reached, it is desirable to use as few stages as possible in building up to the final output power level, and to use tubes that require a minimum of driving power.

Circuit Design and Layout

Harmonic currents of considerable amplitude flow in both the grid and plate circuits of rf power amplifiers, but they will do relatively little harm if they can be effectively bypassed to the cathode of the tube. Fig. 16-9 shows the paths followed by harmonic currents in an amplifier circuit; because of the high reactance of the tank coil there is little harmonic current in it, so the harmonic currents

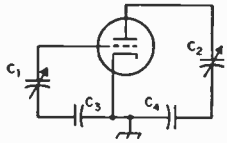

Fig. 16-9 – A vhf resonant circuit is formed by the tube capacitance and the leads through the tank and blocking capacitors. Regular tank coils are not shown, since they have little effect on such resonances. C1 is the grid tuning capacitor and C2 is the plate tuning capacitor. C3 and C4 are the grid and plate blocking or bypass capacitors, respectively.

simply flow through the tank capacitor, the plate (or grid) blocking capacitor, and the tube capacitances. The lengths of the leads forming these paths is of great importance, since the inductance in this circuit will resonate with the tube capacitance at some frequency in the vhf range (the tank and blocking capacitances usually are so large compared with the tube capacitance that they have little effect on the resonant frequency). If such a resonance happens to occur at or near the same frequency as one of the transmitter harmonics, the effect is just the same as though a harmonic tank circuit had been deliberately introduced; the harmonic at that frequency will be tremendously increased in amplitude.

Such resonances are unavoidable, but by keeping the path from plate to cathode and from grid to cathode as short as is physically possible, the resonant frequency usually can be raised above 100 MHz in amplifiers of medium power. This puts it between the two groups of television channels.

It is easier to place grid-circuit vhf resonances where they will do no harm when the amplifier is link-coupled to the driver stage, since this generally permits shorter leads and more favorable conditions for bypassing the harmonics than is the case with capacitive coupling. Link coupling also reduces the coupling between the driver and amplifier at harmonic frequencies, thus preventing driver harmonics from being amplified.

The inductance of leads from the tube to the tank capacitor can be reduced not only by shortening but by using flat strip instead of wire conductors. It is also better to use the chassis as the return from the blocking capacitor or tuned circuit to cathode, since a chassis path will have less inductance than almost any other form of connection.

The vhf resonance points in amplifier tank circuits can be found by coupling a grid-dip meter covering the 50-250 MHz range to the grid and plate leads. If a resonance is found in or near a TV channel, methods such as those described above should be used to move it well out of the TV range. The grid-dip meter also should be used to check for vhf resonances in the tank coils, because coils made for 14 MHz and below usually will show such resonances. In making the check, disconnect the coil entirely from the transmitter and move the grid-dip meter coil along it while exploring for a dip in the 54-88-MHz band. If a resonance falls in a TV channel that is in use in the locality, changing the number of turns will move it to a less-troublesome frequency.

Operating Conditions

Grid bias and grid current have an important effect on the harmonic content of the rf currents in both the grid and plate circuits. In general, harmonic output increases as the grid bias and grid current are increased, but this is not necessarily true of a *particular* harmonic. The third and higher harmonics, especially, will go through fluctuations in amplitude as the grid current is increased, and sometimes a rather high value of grid current will minimize one harmonic as compared with a low value. This characteristic can be used to advantage where a particular harmonic is causing interference, remembering that the operating conditions that minimize one harmonic may greatly increase another.

For equal operating conditions, there is little or no difference between single-ended and push-pull amplifiers in respect to harmonic generation. Push-pull amplifiers are frequently troublemakers on even-order harmonics because with such amplifiers the even-harmonic voltages are in phase at the ends of the tank circuit and hence appear with equal amplitude across the whole tank coil, if the center of the coil is not grounded. Under such circumstances the even harmonics can be coupled to the output circuit through stray capacitance between the tank and coupling coils. This does not occur in a single-ended amplifier having an inductively coupled tank, if the coupling coil is placed at the cold end, or with a pi-network tank.

Harmonic Traps

If a harmonic in only one TV channel is particularly bothersome – frequently the case when the transmitter operates on 28 MHz – a trap tuned to the harmonic frequency may be installed in the plate lead as shown in Fig. 16-10. At the harmonic frequency the trap represents a very high impedance and hence reduces the amplitude of the harmonic current flowing through the tank circuit. In the push-pull circuit both traps have the same constants. The L/C ratio is not critical but a high-C circuit usually will have least effect on the performance of the plate circuit at the normal operating frequency.

Since there is a considerable harmonic voltage across the trap, radiation may occur from the trap unless the transmitter is well shielded. Traps should be placed so that there is no coupling between them and the amplifier tank circuit.

A trap is a highly selective device and so is useful only over a small range of frequencies. A second- or third-harmonic trap on a 28-MHz tank circuit usually will not be effective over more than 50 kHz or so at the fundamental frequency, depending on how serious the interference is without the trap. Because they are critical of

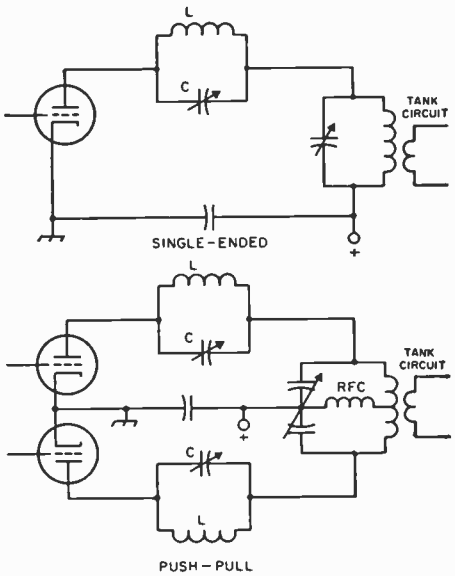

Fig. 16-10 — Harmonic traps in an amplifier plate circuit. L and C should resonate at the frequency of the harmonic to be suppressed. C may be a 25- to 50-pF midget, and L usually consists of 3 to 6 turns about 1/2 inch in diameter for Channels 2 through 6. The inductance should be adjusted so that the trap resonates at about half capacitance of C before being installed in the transmitter. The frequency may be checked with a grid-dip meter. When in place, the trap should be adjusted for minimum interference to the TV picture.

adjustment, it is better to prevent TVI by other means, if possible, and use traps only as a last resort.

PREVENTING RADIATION FROM THE TRANSMITTER

The extent to which interference will be caused by direct radiation of spurious signals depends on the operating frequency, the transmitter power level, the strength of the television signal, and the distance between the transmitter and TV receiver. Transmitter radiation can be a very serious problem if the TV signal is weak, if the TV receiver and amateur transmitter are close together, and if the transmitter is operated with high power.

Shielding

Direct radiation from the transmitter circuits and components can be prevented by proper shielding. To be effective, a shield must completely enclose the circuits and parts and must have no openings that will permit rf energy to escape. Unfortunately, ordinary metal boxes and cabinets do not provide good shielding, since such openings as louvers, lids, and holes for running in connections allow far too much leakage.

A primary requisite for good shielding is that all joints must make a good electrical connection along their entire length. A small slit or crack will let out a surprising amount of rf energy; so will ventilating louvers and large holes such as those used for mounting meters. On the other hand, small holes do not impair the shielding very greatly, and a limited number of ventilating holes may be used if they are small – not over 1/4 inch in diameter. Also, wire screen makes quite effective shielding if the wires make good electrical connection at each crossover. Perforated aluminum such as the "do-it-yourself" sold at hardware stores also is good, although not very strong mechanically. If perforated material is used, choose the variety with the smallest openings. The leakage through large openings can be very much reduced by covering such openings with screening or perforated aluminum, well bonded to all edges of the opening.

The intensity of rf fields about coils, capacitors, tubes and wiring decreases very rapidly with distance, so shielding is more effective, from a practical standpoint, if the components and wiring are not too close to it. It is advisable to have a separation of several inches, if possible, between "hot" points in the circuit and the nearest shielding.

For a given thickness of metal, the greater the conductivity the better the shielding. Copper is best, with aluminum, brass and steel following in that order. However, if the thickness is adequate for structural purposes (over .02 inch) and the shield and a "hot" point in the circuit are not in close proximity, any of these metals will be satisfactory. Greater separation should be used with steel shielding than with the other materials not only because it is considerably poorer as a shield but also because it will cause greater losses in near-by circuits than would copper or aluminum at the same distance. Wire screen or perforated metal used as a shield should also be kept at some distance from high-voltage or high-current rf points, since there is considerably more leakage through the mesh than through solid metal.

Where two pieces of metal join, as in forming a corner, they should overlap at least a half inch and be fastened together firmly with screws or bolts spaced at close-enough intervals to maintain firm contact all along the joint. The contact surfaces should be clean before joining, and should be checked occasionally – especially steel, which is almost certain to rust after a period of time.

The leakage through a given size of aperture in shielding increases with frequency, so such points as good continuous contact, screening of large holes, and so on, become even more important when the radiation to be suppressed is in the high band – 174-216 MHz. Hence 50- and 144-MHz transmitters, which in general will have frequency-multiplier harmonics of relatively high intensity in this region, require special attention in this respect if the possibility of interfering with a channel received locally exists.

Lead Treatment

Even very good shielding can be made completely useless when connections are run to

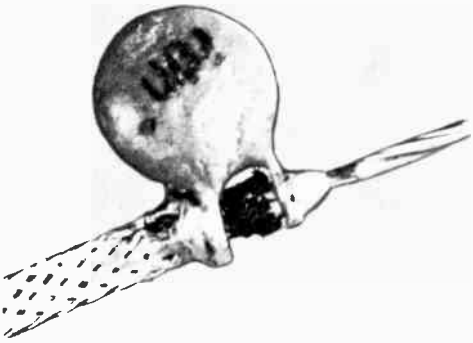

Fig. 16-11 — Proper method of bypassing the end of a shielded lead using disk ceramic capacitor. The .001-μF size should be used for 1600 volts or less; 500 pF at higher voltages. The leads are wrapped around the inner and outer conductors and soldered, so that the lead length is negligible. This photograph is about four times actual size.

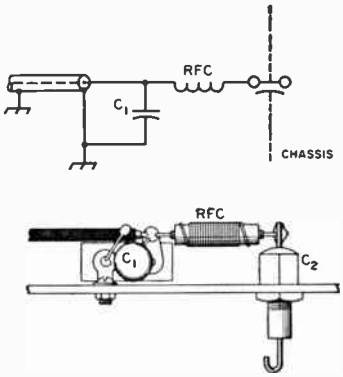

Fig. 16-13 — Additional lead filtering for harmonics or other spurious frequencies in the high vhf TV band (174-216 MHz).
C1 — .001-μF disk ceramic.
C2 — 500- or 1000-pF fed-through bypass (Centralab FT-1000. Above 500 volts, substitute Centralab 858S-500.).
RFC — 14 inches No. 26 enamel close-wound on 3/16-inch dia. form or composition resistor body.

external power supplies and other equipment from the circuits inside the shield. Every such conductor leaving the shielding forms a path for the escape of rf, which is then radiated by the connecting wires. Hence a step that is essential in every case is to prevent harmonic currents from flowing on the leads leaving the shielded enclosure.

Harmonic currents always flow on the dc or ac leads connecting to the tube circuits. A very effective means of preventing such currents from being coupled into other wiring, and one that provides desirable bypassing as well, is to use shielded wire for all such leads, maintaining the shielding from the point where the lead connects to the tube or rf circuit right through to the point where it leaves the chassis. The shield braid should be grounded to the chassis at both ends and at frequent intervals along the path.

Good bypassing of shielded leads also is essential. Bearing in mind that the shield braid about the conductor confines the harmonic currents to the *inside* of the shielded wire, the object of bypassing is to prevent their escape. Fig. 16-11 shows the proper way to bypass. The small .001-pF ceramic disk capacitor, when mounted on the end of the shielded wire as shown in Fig. 16-11, actually forms a series-resonant circuit in the 54-88-MHz range and thus represents practically a short circuit for low-band TV harmonics. The exposed wire to the connection terminal should be kept as short as is physically possible, to prevent any possible harmonic pickup exterior to the shielded wiring. Disk capacitors in the useful capacitance range of 500 to 1000 pF are available in several voltage ratings up to 6000 volts.

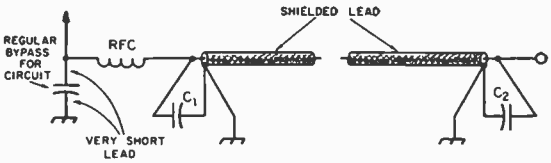

Fig. 16-12 — Additional rf filtering of supply leads may be required in regions where the TV signal is very weak. The rf choke should be physically small, and may consist of a 1-inch winding of No. 26 enameled wire on a 1/4-inch form, close-wound. Manufactured single-layer chokes having an inductance of a few microhenries also may be used.

These bypasses are essential at the connection-block terminals, and desirable at the tube ends of the leads also. Installed as shown with shielded wiring, they have been found to be so effective that there is usually no need for further harmonic filtering. However, if a test shows that additional filtering is required, the arrangement shown in Fig. 16-12 may be used. Such an rf filter should be installed at the tube end of the shielded lead, and if more than one circuit is filtered care should be taken to keep the rf chokes separated from each other and so oriented as to minimize coupling between them. This is necessary for preventing harmonics present in one circuit from being coupled into another.

In difficult cases involving Channels 7 to 13 — i.e., close proximity between the transmitter and receiver, and a weak TV signal — additional lead-filtering measures may be needed to prevent radiation of interfering signals by 50- and 144-MHz transmitters. A recommended method is shown in Fig. 16-13. It uses a shielded lead bypassed with a ceramic disk as described above, with the addition of a low-inductance feed-through type capacitor and a small rf choke, the capacitor being used as a terminal for the external connection. For voltages above 400, a capacitor of compact construction (as indicated in the caption) should be used, mounted so that there is a very minimum of exposed lead,

inside the chassis, from the capacitor to the connection terminal.

As an alternative to the series-resonant bypassing described above, feed-through type capacitors such as the Sprague "Hypass" type may be used as terminals for external connections. The ideal method of installation is to mount them so they protrude through the chassis, with thorough bonding to the chassis all around the hole in which the capacitor is mounted. The principle is illustrated in Fig. 16-14.

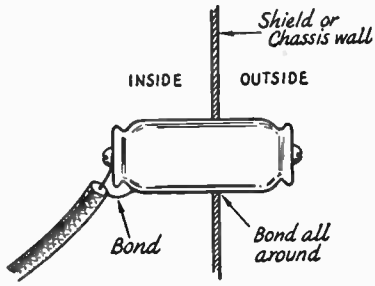

Fig. 16-14 — The best method of using the "Hypass" type feed-through capacitor. Capacitances of .01 to 0.1 μF are satisfactory. Capacitors of this type are useful for high-current circuits, such as filament and 117-volt leads, as a substitute for the rf choke shown in Fig. 16-12, in cases where additional lead filtering is needed.

Meters that are mounted in an rf unit should be enclosed in shielding covers, the connections being made with shielded wire with each lead bypassed as described above. The shield braid should be grounded to the panel or chassis immediately outside the meter shield, as indicated in Fig. 16-15. A bypass may also be connected across the meter terminals, principally to prevent any fundamental current that may be present from flowing through the meter itself. As an alternative to individual meter shielding the meters may be mounted entirely behind the panel, and the panel holes needed for observation may be covered with wire screen that is carefully bonded to the panel all around the hole.

Care should be used in the selection of shielded wire for transmitter use. Not only should the insulation be conservatively rated for the dc voltage in use, but the insulation should be of material that will not easily deteriorate in soldering. The rf characteristics of the wire are not especially important, except that the attenuation of harmonics in the wire itself will be greater if the insulating material has high losses at radio frequencies; in other words, wire intended for use at dc and low frequencies is preferable to cables designed expressly for carrying rf. The attenuation also will increase with the length of the wire; in general, it is better to make the leads as long as circumstances permit rather than to follow the more usual practice of using no more lead than is actually necessary. Where wires cross or run parallel, the shields should be spot-soldered

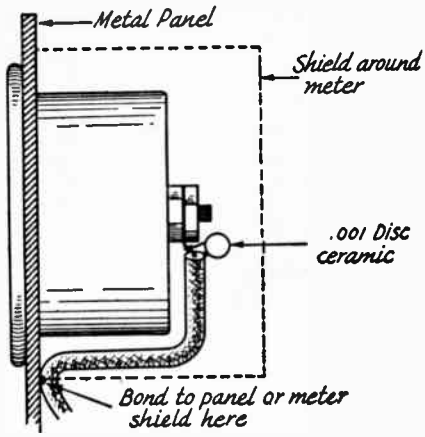

Fig. 16-15 — Meter shielding and bypassing. It is essential to shield the meter mounting hole since the meter will carry rf through it to be radiated. Suitable shields can be made from 2 1/2- or 3-inch diameter metal cans or small metal chassis boxes.

together and connected to the chassis. For high voltages, automobile ignition cable covered with shielding braid is recommended.

Proper shielding of the transmitter requires that the rf circuits be shielded entirely from the external connecting leads. A situation such as is shown in Fig. 16-17, where the leads in the rf chassis have been shielded and properly filtered but the chassis is mounted in a large shield, simply invites the harmonic currents to travel over the chassis and on out over the leads *outside* the chassis. The shielding about the rf circuits should make complete contact with the chassis on which the parts are mounted.

Checking Transmitter Radiation

A check for transmitter radiation always should be made before attempting to use low-pass filters or other devices for preventing harmonics from reaching the antenna system. The only really satisfactory indicating instrument is a television receiver. In regions where the TV signal is strong an indicating wavemeter such as one having a crystal

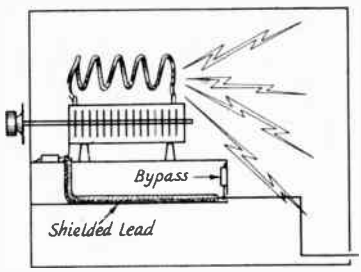

Fig. 16-17 — A metal cabinet can be an adequate shield, but there will still be radiation if the leads inside can pick up rf from the transmitting circuits.

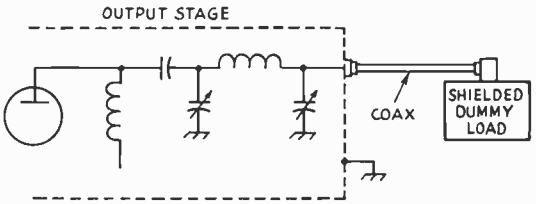

Fig. 16-18 — Dummy-antenna system for checking harmonic radiation from the transmitter and leads.

or tube detector may be useful; if it is possible to get any indication at all from harmonics either on supply leads or around the transmitter itself, the harmonics are probably strong enough to cause interference. However, the absence of any such indication does not mean that harmonic interference will not be caused. If the techniques of shielding and lead filtering described in the preceding section are followed, the harmonic intensity on any external leads should be far below what any such instruments can detect.

Radiation checks should be made with the transmitter delivering full power into a dummy antenna, such as an incandescent lamp of suitable power rating, preferably installed inside the shielded enclosure. If the dummy must be external, it is desirable to connect it through a coax-matching circuit such as is shown in Fig. 16-18. Shielding the dummy antenna circuit is also desirable, although it is not always necessary.

Make the radiation test on all frequencies that are to be used in transmitting, and note whether or not interference patterns show in the received picture. (These tests must be made while a TV signal is being received, since the beat patterns will not be formed if the TV picture carrier is not present.) If interference exists, its source can be detected by grasping the various external leads (by the insulation, not the live wire!) or bringing the hand near meter faces, louvers, and other possible points where harmonic energy might escape from the transmitter. If any of these tests cause a *change* – not necessarily an *increase* – in the intensity of the interference, the presence of harmonics at that point is indicated. The location of such "hot" spots usually will point the way to the remedy. If the TV receiver and the transmitter can be operated side-by-side, a length of wire connected to one antenna terminal on the receiver can be used as a probe to go over the transmitter enclosure and external leads. This device will very quickly expose the spots from which serious leakage is taking place.

As a final test, connect the transmitting antenna or its transmission line terminals to the outside of the transmitter shielding. Interference created when this test is applied indicates that weak currents are on the outside of the shield and can be conducted to the antenna when the normal antenna connections are used. Currents of this nature represent interference that is conducted *over* low-pass filters, and hence cannot be eliminated by such filters.

TRANSMITTING-ANTENNA CONSIDERATIONS

When a well-shielded transmitter is used in conjunction with an effective low-pass filter, and there is no incidental rectification in the area, it is impossible to have "harmonic-type" TVI, regardless of the type of transmitting antenna. However, the type of transmitting antenna in use can be responsible for "fundamental-overload" TVI.

To minimize the chances of TVI, the transmitting antenna should be located as far as possible from the receiving antenna. The chances of fundamental overload at the television receiver are reduced when a horizontal transmitting antenna or beam is mounted higher than the TV antenna. Other things being equal, fundamental overload is more likely to occur with a vertical transmitting antenna than with a horizontal one, because the vertical antenna has a stronger field at a low angle. If a ground-plane antenna can be located well above the height of the TV receiving antenna, there is less likelihood of fundamental overload than when it is at the same height or below the television antenna.

The SWR on the line to the transmitting antenna has no effect on TVI. However, when the line to the antenna passes near the TV antenna, radiation from the line can be a source of TVI. Methods for minimizing radiation from the line are discussed in the chapter on transmission lines.

PREVENTING HARMONICS FROM REACHING THE ANTENNA

The third and last step in reducing harmonic TVI is to keep the spurious energy generated in or passed through the final stage from traveling over the transmission line to the antenna. It is seldom worthwhile even to attempt this until the radiation from the transmitter and its connecting leads has been reduced to the point where, with the transmitter delivering full power into a dummy antenna, it has been determined by actual testing with a television receiver that the radiation is below the level that can cause interference. If the dummy antenna test shows enough radiation to be seen in a TV picture, it is a practical certainty that harmonics will be coupled to the antenna system no matter what preventive measures are taken. In inductively coupled output systems, some harmonic energy will be transferred from the final amplifier through the mutual inductance between the tank coil and the output coupling coil. Harmonics of the output frequency transferred in this way can be greatly reduced by providing sufficient selectivity between the final tank and the transmission line. A good deal of selectivity, amounting to 20 to 30 dB reduction of the second harmonic and much higher reduction of higher-order harmonics, is furnished by a matching circuit of the type described in the chapter on transmission lines. An "antenna coupler" is therefore a worthwhile addition to the transmitter.

In 50- and 144-MHz transmitters, particularly, harmonics not directly associated with the output

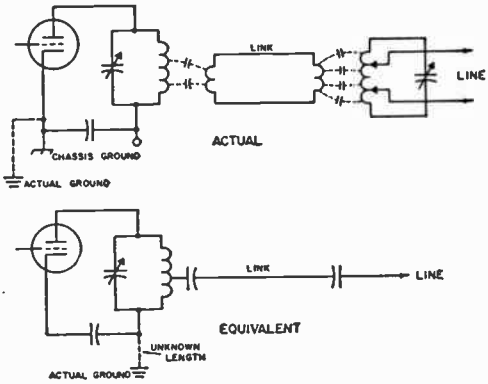

Fig. 16-19 – The stray capacitive coupling between coils in the upper circuit leads to the equivalent circuit shown below, for vhf harmonics.

frequency – such as those generated in low-frequency early stages of the transmitter – may get coupled to the antenna by stray means. For example, a 144-MHz transmitter might have an oscillator or frequency multiplier at 48 MHz, followed by a tripler to 144 MHz. Some of the 48-MHz energy will appear in the plate circuit of the tripler, and if passed on to the grid of the final amplifier will appear as a 48-MHz modulation on the 144-MHz signal. This will cause a spurious signal at 192 MHz, which is in the high TV band, and the selectivity of the tank circuits may not be sufficient to prevent its being coupled to the antenna. Spurious signals of this type can be reduced by using link coupling between the driver stage and final amplifier (and between earlier stages as well) in addition to the suppression afforded by using a Transmatch.

Capacitive Coupling

The upper drawing in Fig. 16-19 shows a parallel-conductor link as it might be used to couple into a parallel-conductor line through a matching circuit. Inasmuch as a coil is a sizable metallic object, there is capacitance between the final tank coil and its associated link coil, and between the matching-circuit coil and its link. Energy coupled through these capacitances travels over the link circuit and the transmission line as though these were merely single conductors. The tuned circuits simply act as masses of metal and offer no selectivity at all for capacitively-coupled energy. Although the actual capacitances are small, they offer a good coupling medium for frequencies in the vhf range.

Capacitive coupling can be reduced by coupling to a "cold" point on the tank coil – the end connected to ground or cathode in a single-ended stage. In push-pull circuits having a split-stator capacitor with the rotor grounded for rf, all parts of the tank coil are "hot" at even harmonics, but the center of the coil is "cold" at the fundamental and odd harmonics. If the center of the tank coil, rather than the rotor of the tank capacitor, is grounded through a bypass capacitor the center of the coil is "cold" at all frequencies, but this arrangement is not very desirable because it causes the harmonic currents to flow through the coil rather than the tank capacitor and this increases the harmonic transfer by pure inductive coupling.

With either single-ended or balanced tank circuits the coupling coil should be grounded to the chassis by a short, direct connection as shown in Fig. 16-20. If the coil feeds a balanced line or link, it is preferable to ground its center, but if it feeds a coax line or link one side may be grounded. Coaxial output is much preferable to balanced output, because the harmonics have to stay *inside* a properly installed coax system and tend to be attenuated by the cable before reaching the Transmatch.

At high frequencies – and possibly as low as 14 MHz – capacitive coupling can be greatly reduced by using a shielded coupling coil. The inner conductor of a length of coaxial cable is used to form a one-turn coupling coil. The outer conductor serves as an open-circuited shield around the turn, the shield being grounded to the chassis. The shielding has no effect on the inductive coupling. Because this construction is suitable only for one turn, the coil is not well adapted for use on the lower frequencies where many turns are required for good coupling.

A shielded coupling coil or coaxial output will not prevent stray capacitive coupling to the antenna if harmonic currents can flow over the *outside* of the coax line. In Fig. 16-21, the arrangement at either A or C will allow rf to flow over the outside of the cable to the antenna system. The proper way to use coaxial cable is to shield the transmitter completely, as shown at B, and make sure that the outer conductor of the cable is a continuation of the transmitter shielding. This prevents rf inside the transmitter from getting out by any path except the *inside* of the cable. Harmonics flowing *through* a coax line can be stopped by an antenna coupler or low-pass filter installed in the line.

Low-Pass Filters

A low-pass filter properly installed in a coaxial line, feeding either a matching circuit (antenna coupler) or feeding the antenna directly, will provide very great attenuation of harmonics. When

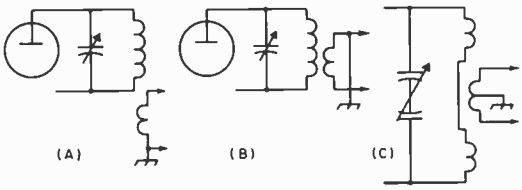

Fig. 16-20 – Methods of coupling and grounding link circuits to reduce capacitive coupling between the tank and link coils. Where the link is wound over one end of the tank coil the side toward the hot end of the tank should be grounded, as shown at B.

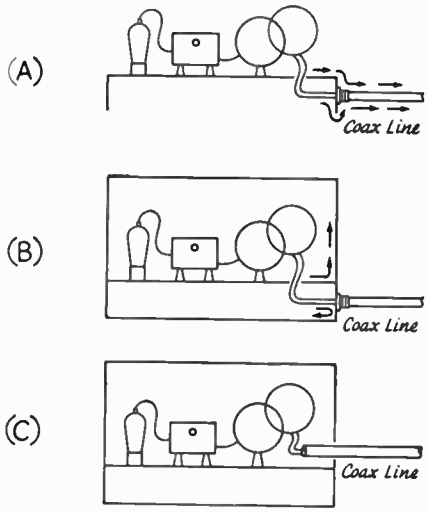

Fig. 16-21 — Right (B) and wrong (A and C) ways to connect a coaxial line to the transmitter. In A or C, harmonic energy coupled by stray capacitance to the outside of the cable will flow without hindrance to the antenna system. In B the energy cannot leave the shield and can flow out only through, not over, the cable.

the main transmission line is of the parallel-conductor type, the coax-coupled matching-circuit arrangement is highly recommended as a means for using a coax low-pass filter.

A low-pass filter will transmit power at the fundamental frequency without appreciable loss if the line in which it is inserted is properly terminated (has a low SWR).At the same time it has

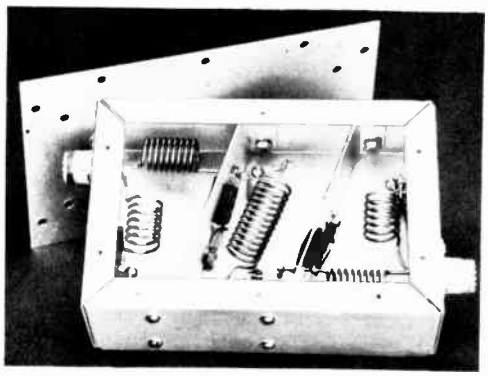

Fig. 16-22 — An inexpensive low-pass filter using silver-mica postage-stamp capacitors. The box is a 2 X 4 X 6 aluminum chassis. Aluminum shields, bent and folded at the sides and bottom for fastening to the chassis, form shields between the filter sections. The diagonal arrangement of the shields provides extra room for the coils and makes it easier to fit the shields in the box, since bending to exact dimensions is not essential. The bottom plate, made from sheet aluminum, extends a half inch beyond the ends of the chassis and is provided with mounting holes in the extensions. It is held on the chassis with sheet-metal screws.

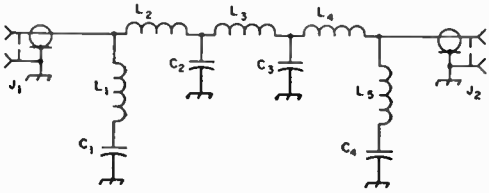

Fig. 16-23 — Low-pass filter circuit. In the table below the letters refer to the following:

A — Using 100- and 70-pF 500-volt silver mica capacitors in parallel for C2 and C3.

B — Using 70- and 50-pF silver mica capacitors in parallel for C2 and C3.

C — Using 100- and 50-pF mica capacitors, 1200-volt (case style CM-45) in parallel for C2 and C3.

D and E — Using variable air capacitors, 500- and 1000-volt rating, adjusted to values given.

	A	B	C	D	E	
Z_o	52	75	52	52	75	ohms
f_c	36	35.5	41	40	40	MHz
f_∞	44.4	47	54	50	50	MHz
f_1	25.5	25.2	29	28.3	28.3	MHz
f_2	32.5	31.8	37.5	36.1	36.1	MHz
C1, C4	50	40	50	46	32	pF
C2, C3	170	120	150	154	106	pF
L1, L5	5 1/2	6	4	5	6 1/2	turns*
L2, L4	8	11	7	7	9 1/2	turns*
L3	9	13	8	8 1/2	11 1/2	turns*

*No. 12 or 14 wire, 1/2-inch ID, 8 tpi.

large attenuation for all frequencies above the "cutoff" frequency.

Low-pass filters of simple and inexpensive construction for use with transmitters operating below 30 MHz are shown in Fig. 16-22 and 16-24. The former is designed to use mica capacitors of readily available capacitance values, for compactness and low cost. Both use the same circuit, Fig. 16-23; the only difference being in the *L* and *C* values. Technically, they are three-section filters having two full constant-*k* sections and two *m*-derived terminating half-sections, and their attenuation in the 54-88-MHz range varies from over 50 to nearly 70 dB, depending on the frequency and the particular set of values used. At high frequencies the ultimate attenuation will depend somewhat on internal resonant conditions associated with component lead lengths. These leads should be kept as short as possible.

The power that filters using mica capacitors can handle safely is determined by the voltage and current limitations of the capacitors. The power capacity is least at the highest frequency. The unit using postage-stamp silver mica capacitors is capable of handling approximately 50 watts in the 28-MHz band, when working into a properly-matched line, but is good for about 150 watts at 21 MHz and 300 watts at 14 MHz and lower frequencies. A filter with large mica capacitors

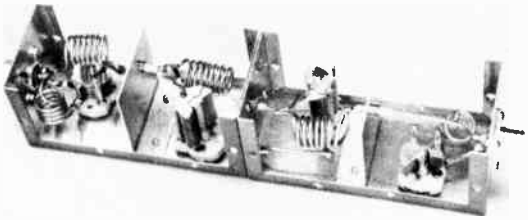

Fig. 16-24 — Low-pass filter using variable capacitors. The unit is housed in two 2 1/4 X 2 1/4 X 5-inch Miniboxes, end to end. The cover should be secured to the box at several points.

(case type CM-45) will carry about 250 watts safely at 28 MHz, this rating increasing to 500 watts at 21 MHz and a kilowatt at 14 MHz and lower. If there is an appreciable mismatch between the filter and the line into which it works, these ratings will be considerably decreased, so, in order to avoid capacitor failure, it is highly essential that the line on the output side of the filter be carefully matched.

The power capacity of these filters can be increased considerably by substituting rf type fixed capacitors (such as the Centralab 850 series) or variable air capacitors, in which event the power capability will be such as to handle the maximum amateur power on any band. The construction can be modified to accommodate variable air capacitors as shown in Fig. 16-24.

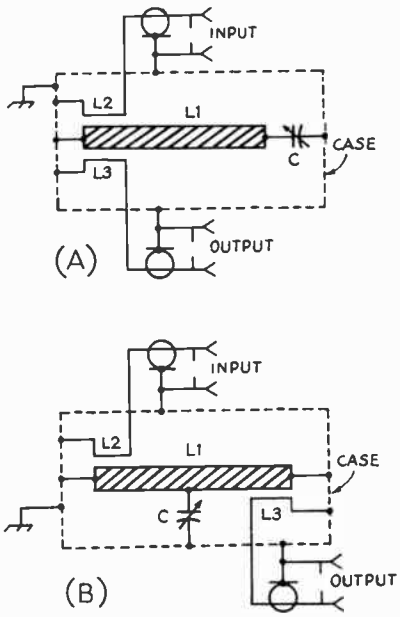

Fig. 16-25 — Equivalent circuits for the strip-line filters. At A, the circuit for the 6- and 2-meter filters are shown. L2 and L3 are the input and output links. These filters are bilaterial, permitting interchanging of the input and output terminals.

At B, the representative circuit for the 220- and 432-MHz filters. These filters are also bilaterial.

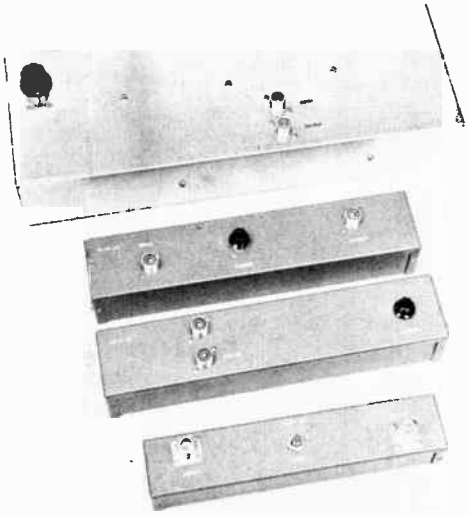

Fig. 16-26 — High-Q strip-line filters for 50 MHz (top), 220, 144 and 420 MHz. Those for the two highest bands are half-wave line circuits. All use standard chassis.

Using fixed capacitors of standard tolerances, there should be little difficulty in getting proper filter operation. A grid-dip meter with an accurate calibration should be used for adjustment of the coils. First, wire up the filter without L2 and L4. Short-circuit J1 at its inside end with a screwdriver or similar conductor, couple the grid-dip meter to L1 and adjust the inductance of L1, by varying the turn spacing, until the circuit resonates at f_∞ as given in the table. Do the same thing at the other end of the filter with L5. Then couple the meter to the circuit formed by L3, C2 and C3, and adjust L3 to resonate at the frequency f_1 as given by the table. Then remove L3, install L2 and L4, and adjust L2 to make the circuit formed by L1, L2, C1 and C2 (without the short across J1) resonate at f_2 as given in the table. Do the same with L4 for the circuit formed by L4, L5, C3 and C4. Then replace L3 and check with the grid-dip meter at any coil in the filter; a distinct resonance should be found at or very close to the cutoff frequency, f_c.

FILTERS FOR VHF TRANSMITTERS

High rejection of unwanted frequencies is possible with the tuned-line filters of Fig. 16-25. Examples are shown for each band from 50 through 450 MHz. Construction is relatively simple, and the cost is low. Standard boxes are used, for ease of duplication.

The filter of Fig. 16-27 is selective enough to pass 50-MHz energy and attenuate the 7th harmonic of an 8-MHz oscillator that falls in TV Channel 2. With an insertion loss at 50 MHz of about 1 dB, it can provide up to 40 dB of attenuation to energy at 57 MHz in the same line. This should be more than enough attenuation to take care of the worst situations, provided that the radiation is by way of the transmitter output coax

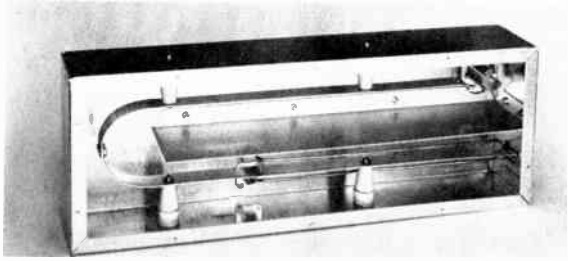

Fig. 16-27 — Interior of the 50-MHz strip line filter. Inner conductor of aluminum strip is bent into U shape, to fit inside a standard 17-inch chassis.

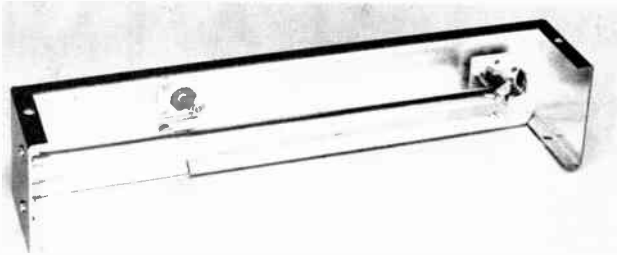

Fig. 16-28 — The 144-MHz filter has an inner conductor of 1/2-inch copper tubing 10 inches long, grounded to the left end of the case and supported at the right end by the tuning capacitor.

Fig. 16-29 — A half-wave strip line is used in the 220-MHz filter. It is grounded at both ends and tuned at the center.

only. The filter will not eliminate interfering energy that gets out from power cables, the ac line, or from the transmitter circuits themselves. It also will do nothing for TVI that results from deficiencies in the TV receiver.

The 50-MHz filter, Fig. 16-27, uses a folded line in order to keep it within the confines of a standard chassis. The case is a 6 X 17 X 3-inch chassis (Bud AC-433) with a cover plate that fastens in place with self-tapping screws. An aluminum partition down the middle of the assembly is 14 inches long, and the full height of the chassis, 3 inches.

The inner conductor of the line is 32 inches long and 13/16 inch wide, of 1/16-inch brass, copper or aluminum. This was made from two pieces of aluminum spliced together to provide the 32-inch length. Splicing seemed to have no ill effect on the circuit *Q*. The side of the "U" are 2 7/8 inches apart, with the partition at the center. The line is supported on ceramic standoffs. These were shimmed up with sections of hard wood or bakelite rod, to give the required 1 1/2-inch height.

The tuning capacitor is a double-spaced variable (Hammarlund HF-30-X) mounted 1 1/2 inches from the right end of the chassis. Input and output coupling loops are of No. 10 or 12 wire, 10 inches long. Spacing away from the line is adjusted to about 1/4 inch.

The 144-MHz model is housed in a 2 1/4 X 2 1/2 X 12-inch Minibox (Bud CU-2114-A).

One end of the tubing is slotted 1/4 inch deep with a hacksaw. This slot takes a brass angle bracket 1 1/2 inches wide, 1/4 inch high, with a 1/2-inch mounting lip. This 1/4-inch lip is soldered into the tubing slot, and the bracket is then bolted to the end of the box, so as to be centered on the end plate.

The tuning capacitor (Hammarlund HF-15-X) is mounted 1 1/4 inches from the other end of the box, in such a position that the inner conductor can be soldered to the two stator bars.

The two coaxial fittings (SO-239) are 11/16 inch in from each side of the box, 3 1/2 inches from the left end. The coupling loops are No. 12 wire, bent so that each is parallel to the center line of the inner conductor, and about 1/8 inch from its surface. Their cold ends are soldered to the brass mounting bracket.

The 220-MHz filter uses the same size box as the 144-MHz model. The inner conductor is 1/16-inch brass or copper, 5/8 inch wide, just long enough to fold over at each end for bolting to the box. It is positioned so that there will be 1/8 inch clearance between it and the rotor plates of the tuning capacitor. The latter is a Hammarlund HF-15-X, mounted slightly off-center in the box, so that its stator plates connect to the exact mid-point of the line. The 5/16-inch mounting hole in the case is 5 1/2 inches from one end. The SO-239 coaxial fittings are 1 inch in from opposite

sides of the box, 2 inches from the ends. Their coupling links are No. 14 wire, 1/8 inch from the inner conductor of the line.

The 420-MHz filter is similar in design, using a 1 5/8 X 2 X 10-inch Minibox (Bud CU-2113-A). A half-wave line is used, with disk tuning at the center. The disks are 1/16-inch brass, 1 1/4-inch diameter. The fixed one is centered on the inner conductor, the other mounted on a No. 6 brass lead-screw. This passes through a threaded bushing, which can be taken from the end of a discarded slug-tuned form. An advantage of these is that usually a tension device is included. If there is none, use a lock nut.

Type N coaxial connectors were used on the 420-MHz model. They are 5/8 inch in from each side of the box, and 1 3/8 inches in from the ends. Their coupling links of No. 14 wire are 1/16 inch from the inner conductor.

Adjustment and Use

If you want the filter to work on both transmitting and receiving, connect the filter between antenna line and SWR indicator. With this arrangement you need merely adjust the filter for minimum reflected power reading on the SWR bridge. This should be zero, or close to it, if the antenna is well-matched. The bridge should be used, as there is no way to adjust the filter properly without it. If you insist on trying, adjust for best reception of signals on frequencies close to the ones you expect to transmit on. This works only if the antenna is well matched.

When the filter is properly adjusted (with the SWR bridge) you may find that reception can be improved by retuning the filter. Don't do it, if you want the filter to work best on the job it was intended to do; the rejection of unwanted energy, transmitting or receiving. If you want to improve reception with the filter in the circuit, work on the receiver input circuit. To get maximum power out of the transmitter and into the line, adjust the transmitter output coupling, not the filter. If the effect of the filter on reception bothers you, connect it in the line from the antenna relay to the transmitter only.

SUMMARY

The methods of harmonic elimination outlined in this chapter have been proved beyond doubt to be effective even under highly unfavorable conditions. It must be emphasized once more, however, that the problem must be solved one step at a time, and the procedure must be in logical order. It cannot be done properly without two items of simple equipment: a grid-dip meter and wavemeter covering the TV bands, and a dummy antenna.

To summarize:

1) Take a critical look at the transmitter on the basis of the design considerations outlined under "Reducing Harmonic Generation."

2) Check all circuits, particularly those connected with the final amplifier, with the grid-dip meter to determine whether there are any resonances in the TV bands. If so, rearrange the circuits so the resonances are moved out of the critical frequency region.

3) Connect the transmitter to the dummy antenna and check with the wavemeter for the presence of harmonics on leads and around the transmitter enclosure. Seal off the weak spots in the shielding and filter the leads until the wavemeter shows no indication at any harmonic frequency.

4) At this stage, check for interference with a TV receiver. If there is interference, determine the cause by the methods described previously and apply the recommended remedies until the interference disappears.

5) When the transmitter is completely clean on the dummy antenna, connect it to the regular antenna and check for interference on the TV receiver. If the interference is not bad, a Transmatch or matching circuit installed as previously described should clear it up. Alternatively, a low-pass filter may be used. If neither the Transmatch nor filter makes any difference in the interference, the evidence is strong that the interference, at least in part, is being caused by receiver overloading because of the strong fundamental-frequency field about the TV antenna and receiver. A Transmatch and/or filter, installed as described above, will invariably make a difference in the intensity of the interference if the interference is caused by transmitter harmonics alone.

6) If there is still interference after installing the Transmatch and/or filter, and the evidence shows that it is probably caused by a harmonic, more attenuation is needed. A more elaborate filter may be necessary. However, it is well at this stage to assume that part of the interference may be caused by receiver overloading, and take steps to alleviate such a condition before trying highly-elaborate filters and traps on the transmitter.

HARMONICS BY RECTIFICATION

Even though the transmitter is completely free from harmonic output it is still possible for interference to occur because of harmonics generated outside the transmitter. These result from rectification of fundamental-frequency currents induced in conductors in the vicinity of the transmitting antenna. Rectification can take place at any point where two conductors are in poor electrical contact, a condition that frequently exists in plumbing, downspouting, BX cables crossing each other, and numerous other places in the ordinary residence. It also can occur at any exposed vacuum tubes in the station, in power supplies, speech equipment, etc., that may not be enclosed in the shielding about the rf circuits. Poor joints anywhere in the antenna system are especially bad, and rectification also may take place in the contacts of antenna changeover relays. Another common cause is overloading the front end of the communications receiver when it is used

with a separate antenna (which will radiate the harmonics generated in the first tube) for break-in.

Rectification of this sort will not only cause harmonic interference but also is frequently responsible for cross-modulation effects. It can be detected in greater or less degree in most locations, but fortunately the harmonics thus generated are not usually of high amplitude. However, they can cause considerable interference in the immediate vicinity in fringe areas, especially when operation is in the 28-MHz band. The amplitude decreases rapidly with the order of the harmonic, the second and third being the worst. It is ordinarily found that even in cases where destructive interference results from 28-MHz operation the interference is comparatively mild from 14 MHz, and is negligible at still lower frequencies.

Nothing can be done at either the transmitter or receiver when rectification occurs. The remedy is to find the source and eliminate the poor contact either by separating the conductors or bonding them together. A crystal wavemeter (tuned to the fundamental frequency) is useful for hunting the source, by showing which conductors are carrying rf and, comparatively, how much.

Interference of this kind is frequently intermittent since the rectification efficiency will vary with vibration, the weather, and so on. The possibility of corroded contacts in the TV receiving antenna should not be overlooked, especially if it has been up a year or more.

TV RECEIVER DEFICIENCIES

When a television receiver is quite close to the transmitter, the intense rf signal from the transmitter's fundamental may overload one or more of the receiver circuits to produce spurious responses that cause interference.

If the overload is moderate, the interference is of the same nature as harmonic interference; it is caused by harmonics generated in the early stages of the receiver and, since it occurs only on channels harmonically related to the transmitting frequency, it is difficult to distinguish from harmonics actually radiated by the transmitter. In such cases additional harmonic suppression at the transmitter will do no good, but any means taken at the receiver to reduce the strength of the amateur signal reaching the first tube will effect an improvement. With very severe overloading, interference also will occur on channels *not* harmonically related to the transmitting frequency, so such cases are easily identified.

Cross-Modulation

Upon some circumstances overloading will result in cross-modulation or mixing of the amateur signal with that from a local fm or TV station. For example, a 14-MHz signal can mix with a 92-MHz fm station to produce a beat at 78 MHz and cause interference in Channel 5, or with a TV station on Channel 5 to cause interference in Channel 3. Neither of the channels interfered with is in harmonic relationship to 14 MHz. Both signals have to be on the air for the interference to occur, and eliminating either at the TV receiver will eliminate the interference.

There are many combinations of this type, depending on the band in use and the local frequency assignments to fm and TV stations. The interfering frequency is equal to the amateur fundamental frequency either added to or subtracted from the frequency of some local station, and when interference occurs in a TV channel that is not harmonically related to the amateur transmitting frequency the possibilities in such frequency combinations should be investigated.

I-f Interference

Some TV receivers do not have sufficient selectivity to prevent strong signals in the intermediate-frequency range from forcing their way through the front end and getting into the i-f amplifier. The once-standard intermediate frequency of, roughly, 21 to 27 MHz, is subject to interference from the fundamental-frequency output of transmitters operating in the 21-MHz band. Transmitters on 28 MHz sometimes will cause this type of interference as well.

A form of i-f interference peculiar to 50-MHz operation near the low edge of the band occurs with some receivers having the standard "41-MHz" i-f, which has the sound carrier at 41.25 MHz and the picture carrier at 45.75 MHz. A 50-MHz signal that forces its way into the i-f system of the receiver will beat with the i-f picture carrier to give a spurious signal on or near the i-f sound carrier, even though the interfering signal is not actually in the nominal passband of the i-f amplifier.

There is a type of i-f interference unique to the 144-MHz band in localities where certain uhf TV channels are in operation, affecting only those TV receivers in which double-conversion type plug-in uhf tuning strips are used. The design of these strips involves a first intermediate frequency that

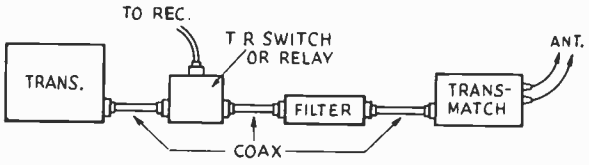

Fig. 16-30 — The proper method of installing a low-pass filter between the transmitter and a Transmatch. If the antenna is fed through coax, the Transmatch can be eliminated, but the transmitter and filter must be completely shielded. If a TR switch is used, it should be installed between the transmitter and low-pass filter. TR switches can generate harmonics themselves, so the low-pass filter should follow the TR switch.

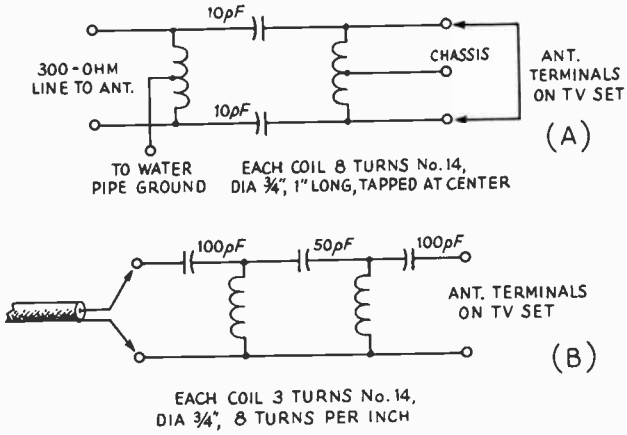

Fig. 16-31 — High-pass filters for installation at the TV receiver antenna terminals. A — balanced filter for 300-ohm line. B — for 75-ohm coaxial line. *Important:* Do not use a direct ground on the chassis of a transformerless receiver. Ground through a .001-μF mica capacitor.

varies with the TV channel to be received and, depending on the particular strip design, this first i-f may be in or close to the 144-MHz amateur band. Since there is comparatively little selectivity in the TV signal-frequency circuits ahead of the first i-f, a signal from a 144-MHz transmitter will "ride into" the i-f, even when the receiver is at a considerable distance from the transmitter. The channels that can be affected by this type of i-f interference are:

Receivers with 21-MHz second i-f	*Receivers with 41-MHz second i-f*
Channels 14-18, incl.	Channels 20-25, incl.
Channels 41-48, incl.	Channels 51-58, incl.
Channels 69-77, incl.	Channels 82 and 83.

If the receiver is not close to the transmitter, a trap of the type shown in Fig. 16-33 will be effective. However, if the separation is small the 144-MHz signal will be picked up directly on the receiver circuits and the best solution is to readjust the strip oscillator so that the first i-f is moved to a frequency not in the vicinity of the 144-MHz band. This has to be done by a competent technician.

I-f interference is easily identified since it occurs on all channels – although sometimes the intensity varies from channel to channel – and the cross-hatch pattern it causes will rotate when the receiver's fine-tuning control is varied. When the interference is caused by a harmonic, overloading, or cross modulation, the structure of the interference pattern does not change (its intensity may change) as the fine-tuning control is varied.

High-Pass Filters

In all of the above cases the interference can be eliminated if the fundamental signal strength can be reduced to a level that the receiver can handle. To accomplish this with signals on bands below 30 MHz, the most satisfactory device is a high-pass filter having a cutoff frequency between 30 and 54 MHz, installed at the tuner input terminals of the receiver. Circuits that have proved effective are shown in Figs. 16-30 and 16-31. Fig. 16-30 has one more section than the filters of Fig. 16-31 and as a consequence has somewhat better cutoff characteristics. All the circuits given are designed to have little or no effect on the TV signals but will attenuate all signals lower in frequency than about 40 MHz. These filters preferably should be constructed in some sort of shielding container, although shielding is not always necessary. The dashed lines in Fig. 16-32 show how individual filter coils can be shielded from each other. The capacitors can be tubular ceramic units centered in holes in the partitions that separate the coils.

Simple high-pass filters cannot always be applied successfully in the case of 50-MHz transmissions, because they do not have sufficiently-sharp cutoff characteristics to give both good attenuation at 50-54 MHz and no attenuation above 54 MHz. A more elaborate design capable of giving the required sharp cutoff has been described (Ladd, "50-MHz TVI – Its Causes and Cures," *QST*, June and July, 1954). This article also contains other information useful in coping with the TVI problems peculiar to 50-MHz operation. As an alternative to such a filter, a high-*Q* wave trap tuned to the transmitting frequency may be used, suffering only the disadvantage that it is quite selective and therefore will protect a receiver from overloading over only a small range of transmitting frequencies in the 50-MHz band. A trap of this type is shown in Fig. 16-33. These "suck-out" traps, while absorbing energy at the frequency to which they are tuned, do not affect the receiver operation otherwise. The assembly should be mounted near the input terminals of the TV tuner and its case should be grounded to the TV set chassis. The traps should be tuned for minimum TVI at the transmitter operating frequency. An insulated tuning tool should be used for adjustment of the trimmer capacitors, since they are at a "hot" point and will show considerable body-capacitance effect.

High-pass filters are available commercially at moderate prices. In this connection, it should be understood by all parties concerned that while an amateur is responsible for *harmonic* radiation from his transmitter, it is no part of his responsibility to

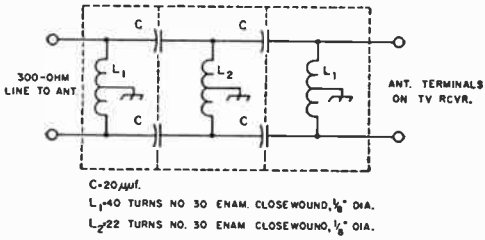

Fig. 16-32 — Another type of high-pass filter for 300-ohm line. The coils may be wound on 1/8-inch diameter plastic knitting needles. *Important:* Do not use a direct ground on the chassis of a transformerless receiver. Ground through a .001-μF mica capacitor.

pay for or install filters, wave traps, etc. that may be required at the receiver to prevent interference caused by his *fundamental* frequency. Proper installation usually requires that the filter be installed right at the input terminals of the rf tuner of the TV set and not merely at the external antenna terminals, which may be at a considerable distance from the tuner. The question of cost is one to be settled between the set owner and the organization with which he deals.

Some of the larger manufacturers of TV receivers have instituted arrangements for co-operating with the set dealer in installing high-pass filters at no cost to the receiver owner. FCC-sponsored TVI Committees, now operating in many cities, have all the information necessary for effectuating such arrangements. To find out whether such a committee is functioning in your community, write to the FCC field office having jurisdiction over your location. A list of the field offices is contained in *The Radio Amateur's License Manual,* published by ARRL.

If the fundamental signal is getting into the receiver by way of the line cord a line filter such as that shown in Fig. 16-1 may help. To be most effective it should be installed inside the receiver chassis at the point where the cord enters, making the ground connections directly to chassis at this point. It may not be so helpful if placed between the line plug and the wall socket unless the rf is actually picked up on the house wiring rather than on the line cord itself.

Antenna Installation

Usually, the transmission line between the TV receiver and the actual TV antenna will pick up a great deal more energy from a nearby transmitter than the television receiving antenna itself. The currents induced on the TV transmission line in this case are of the "parallel" type, where the phase of the current is the same in both conductors. The line simply acts like two wires connected together to operate as one. If the receiver's antenna input circuit were perfectly balanced it would reject these "parallel" or "unbalance" signals and respond only to the true transmission-line ("push-pull") currents; that is, only signals picked up on the actual atenna would cause a receiver response. However, no receiver is perfect in this respect, and many TV receivers will respond strongly to such parallel currents. The result is that the signals from a nearby amateur transmitter are much more intense at the first stage in the TV receiver than they would be if the receiver response were confined entirely to energy picked up on the TV antenna alone. This situation can be improved by using shielded transmission line – coax or, in the balanced form, "twinax" – for the receiving installation. For best results the line should terminate in a coax fitting on the receiver chassis, but if this is not possible the shield should be grounded to the chassis right at the antenna terminals.

The use of shielded transmission line for the receiver also will be helpful in reducing response to harmonics actually being radiated from the transmitter or transmitting antenna. In most receiving installations the transmission line is very much longer than the antenna itself, and is consequently far more exposed to the harmonic fields from the transmitter. Much of the harmonic pickup, therefore, is on the receiving transmission line when the transmitter and receiver are quite close together. Shielded line, plus relocation of either the transmitting or receiving antenna to take advantage of directive effects, often will result in reducing overloading, as well as harmonic pickup, to a level that does not interfere with reception.

UHF TELEVISION

Harmonic TVI in the uhf TV band is far less troublesome than in the vhf band. Harmonics from transmitters operating below 30 MHz are of such high order that they would normally be expected to be quite weak; in addition, the components, circuit conditions and construction of low-frequency transmitters are such as to tend to prevent very strong harmonics from being generated in this region. However, this is not true of amateur vhf transmitters, particularly those working in the 144-MHz and higher bands. Here the problem is quite similar to that of the low vhf TV band with respect to transmitters operating below 30 MHz.

There is one highly favorable factor in uhf TV that does not exist in the most of the vhf TV band:

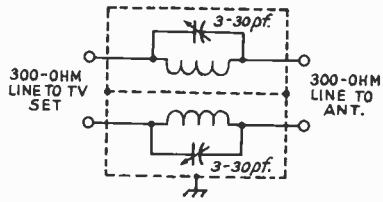

Fig. 16-33 — Parallel-tuned traps for installation in the 300-ohm line to the TV set. The traps should be mounted in an aluminum Minibox with a shield partition between them, as shown. For 50 MHz, the coils should have 9 turns of No. 16 enamel wire, close wound to a diameter of 1/2 inch. The 144-MHz traps should contain coils with a total of 6 turns of the same type wire, close-wound to a diameter of 1/4 inch. Traps of this type can be used to combat fundamental-overload TVI on the lower-frequency bands as well.

TABLE 16-1

Harmonic Relationship – Amateur VHF Bands and UHF TV Channels

Amateur Band	*Harmonic*	*Fundamental Freq. Range*	*Channel Affected*
144 MHz	4th	144.0–144.5	31
		144.5–146.0	32
		146.0–147.5	33
		147.5–148.0	34
	5th	144.0–144.4	55
		144.4–145.6	56
		145.6–146.8	57
		146.8–148.0	58
	6th	144.0–144.33	79
		144.33–145.33	80
		145.33–147.33	81
		147.33–148.0	82
220 MHz	3rd	220–220.67	45
		220.67–222.67	46
		222.67–224.67	47
		224.67–225	48
	4th	220–221	82
		221–222.5	83
420 MHz	2nd	420–421	75
		421–424	76
		424–427	77
		427–430	78
		430–433	79
		433–436	80

If harmonics are radiated, it is possible to move the transmitter frequency sufficiently (within the amateur band being used) to avoid interfering with a channel that may be in use in the locality. By restricting operation to a portion of the amateur band that will not result in harmonic interference, it is possible to avoid the necessity for taking extraordinary precautions to prevent harmonic radiation.

The frequency assignment for uhf television consists of seventy 6-Megahertz channels (Nos. 14 to 83, inclusive) beginning at 470 MHz and ending at 890 MHz. The harmonics from amateur bands above 50-MHz span the uhf channels as shown in Table 16-1. Since the assignment plan calls for a minimum separation of six channels between any two stations in one locality, there is ample opportunity to choose a fundamental frequency that will move a harmonic out of range of a local TV frequency.

COLOR TELEVISION

The color TV signal includes a subcarrier spaced 3.58 MHz from the regular picture carrier (or 4.83 MHz from the low edge of the channel) for transmitting the color information. Harmonics which fall in the color subcarrier region can be epected to cause break-up of color in the received picture. This modifies the chart of Fig. 16-5 to introduce another "severe" region centering around 4.8 MHz measured from the low-frequency edge of the channel. Hence with color television reception there is less opportunity to avoid harmonic interference by choice of operating frequency. In other respects the problem of eliminating interference is the same as with black-and-white television.

INTERFERENCE FROM TV RECEIVERS

The TV picture tube is swept horizontally by the electron beam 15,750 times per second, using a wave shape that has very high harmonic content. The harmonics are of appreciable amplitude even at frequencies as high as 30 MHz, and when radiated from the receiver can cause considerable interference to reception in the amateur bands. While measures to suppress radiation of this nature are required by FCC in current receivers, many older sets have had no such treatment. The interference takes the form of rather unstable, ac-modulated signals spaced at intervals of 15.75 kHz.

Studies have shown that the radiation takes place principally in three ways, in order of their importance: (1) from the ac line, through stray coupling to sweep circuits; (2) from the antenna system, through similar coupling; (3) directly from the picture tube and sweep-circuit wiring. Line radiation often can be reduced by bypassing the ac line cord to the chassis at the point of entry, although this is not completely effective in all cases since the coupling may take place outside the chassis beyond the point where the bypassing is done. Radiation from the antenna is usually suppressed by installing a high-pass filter on the receiver. The direct radiation requires shielding of high-potential leads and, in some receivers, additional bypassing in the sweep circuit; in severe cases, it may be necessary to line the cabinet with screening or similar shielding material.

Incidental radiation of this type from TV and broadcast receivers, when of sufficient intensity to cause serious interference to other radio services (such as amateur), is covered by Part 15 of the FCC rules. When such interference is caused, the user of the receiver is obligated to take steps to eliminate it. The owner of an offending receiver should be advised to contact the source from which the receiver was purchased for appropriate modification of the receiving installation. TV receiver dealers can obtain the necessary information from the set manufacturer.

It is usually possible to reduce interference very considerably, without modifying the TV receiver, simply by having a good amateur-band receiving installation. The principles are the same as those used in reducing "hash" and other noise – use a good antenna, such as the transmitting antenna, for reception; install it as far as possible from ac circuits; use a good feeder system such as a properly balanced two-wire line or coax with the outer conductor grounded; use coax input to the receiver, with a matching circuit if necessary; and check the receiver to make sure that it does not pick up signals or noise with the antenna disconnected.

Chapter 17

Test Equipment and Measurements

Measurement and testing seemingly go hand in hand, but it is useful to make a distinction between "measuring" and "test" equipment. The former is commonly considered to be capable of giving a meaningful quantitative result. For the latter a simple indication of "satisfactory" or "unsatisfactory" may suffice; in any event, the accurate calibration associated with real measuring equipment is seldom necessary, for simple test apparatus.

Certain items of measuring equipment that are useful to amateurs are readily available in kit form, at prices that represent a genuine saving over the cost of identical parts. Included are volt-ohm-milliammeter combinations, vacuum-tube and transistor voltmeters, oscilloscopes, and the like. The coordination of electrical and mechanical design, components, and appearance make it far preferable to purchase such equipment than to attempt to build one's own.

However, some test gear is either not available or can easily be built. This chapter considers the principles of the more useful types of measuring equipment and concludes with the descriptions of several pieces that not only can be built satisfactorily at home but which will facilitate the operation of the amateur station.

THE DIRECT-CURRENT INSTRUMENT

In measuring instruments and test equipment suitable for amateur purposes the ultimate "readout" is generally based on a measurement of direct current. A meter for measuring dc uses electromagnetic means to deflect a pointer over a calibrated scale in proportion to the current flowing through the instrument.

In the D'Arsonval type a coil of wire, to which the pointer is attached, is pivoted between the poles of a permanent magnet, and when current flows through the coil it sets up a magnetic field that interacts with the field of the magnet to cause the coil to turn. The design of the instrument is usually such as to make the pointer deflection directly proportional to the current.

A less expensive type of instrument is the moving-vane type, in which a pivoted soft-iron vane is pulled into a coil of wire by the magnetic field set up when current flows through the coil. The farther the vane extends into the coil the greater the magnetic pull on it, for a given change in current, so this type of instrument does not have "linear" deflection – the intervals of equal current are crowded together at the low-current end and spread out at the high-current end of the scale.

Current Ranges

The sensitivity of an instrument is usually expressed in terms of the current required for full-scale deflection of the pointer. Although a very wide variety of ranges is available, the meters of interest in amateur work have basic "movements" that will give maximum deflection with currents measured in microamperes or milliamperes. They are called microammeters and milliammeters, respectively.

Thanks to the relationships between current, voltage, and resistance expressed by Ohm's Law, it becomes possible to use a single low-range instrument – e.g., 1 milliampere or less full-scale pointer deflection – for a variety of direct-current measurements. Through its ability to measure current, the instrument can also be used indirectly to measure voltage. Likewise, a measurement of *both* current and voltage will obviously yield a value of resistance. These measurement functions are often combined in a single instrument – the volt-ohm-milliammeter or "VOM", a multirange meter that is one of the most useful pieces of measuring and test equipment an amateur can possess.

Accuracy

The accuracy of a dc meter of the D'Arsonval type is specified by the manufacturer. A common specification is "2 percent of full scale," meaning that a 0-100 microammeter, for example, will be correct to within 2 microamperes at any part of the scale. There are very few cases in amateur work where accuracy greater than this is needed. However, when the instrument is part of a more complex measuring circuit, the design and components of which *all* can cause error, the *overall* accuracy of the complete device is always less.

EXTENDING THE CURRENT RANGE

Because of the way current divides between two resistances in parallel, it is possible to increase the range (more specifically, to decrease the sensitivity) of a dc micro- or milliammeter to any desired extent. The meter itself has an inherent resistance – its internal resistance – which determines the full-scale current through it when its rated voltage is applied. (This rated voltage is of the order of a few millivolts.) By connecting an

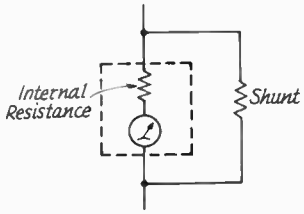

Fig. 17-1 — Use of a shunt to extend the calibration range of a current-reading instrument.

external resistance in parallel with the internal resistance, as in Fig. 17-1, the current will divide between the two, with the meter responding only to that part of the current which flows through the internal resistance of its movement. Thus it reads only part of the total current; the effect is to make more total current necessary for a full-scale meter reading. The added resistance is called a shunt.

It is necessary to know the meter's internal resistance before the required value for a shunt can be calculated. It may vary from a few ohms to a few hundred, with the higher resistance values associated with higher sensitivity. When known, it can be used in the formula below to determine the required shunt for a given current multiplication:

$$R = \frac{R_m}{n - 1}$$

where R is the shunt, R_m is the internal resistance of the meter, and n is the factor by which the original meter scale is to be multiplied.

Making Shunts

Homemade shunts can be constructed from any of various special kinds of resistance wire, or from ordinary copper wire if no resistance wire is available. The Copper Wire Table in this *Handbook* gives the resistance per 1000 feet for various sizes of copper wire. After computing the resistance required, determine the smallest wire size that will carry the full-scale current (250 circular mils per ampere is a satisfactory figure for this purpose). Measure off enough wire to provide the required resistance.

THE VOLTMETER

If a large resistance is connected in *series* with a current-reading meter, as in Fig. 17-2, the current multiplied by the resistance will be the voltage drop across the resistance, which is known as a multiplier. An instrument used in this way is calibrated in terms of the voltage drop across the multiplier resistor, and is called a voltmeter.

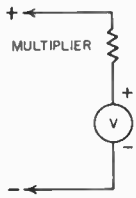

Fig. 17-2 — A voltmeter is a current-indicating instrument in series with a high resistance, the "multiplier."

Sensitivity

Voltmeter sensitivity is usually expressed in ohms per volt, meaning that the meter's *full-scale* reading multiplied by the sensitivity will give the total resistance of the voltmeter. For example, the resistance of a 1000-ohms-per-volt voltmeter is 1000 times the full-scale calibration voltage, and by Ohm's Law the current required for full-scale deflection is 1 milliampere. A sensitivity of 20,000 ohms per volt, a commonly used value, means that the instrument is a 50-microampere meter.

The higher the resistance of the voltmeter the more accurate the measurements in high-resistance circuits. This is because in such a circuit the current flowing through the voltmeter will cause a change in the voltage between the points across which the meter is connected, compared with the voltage with the meter absent, as shown in Fig. 17-3.

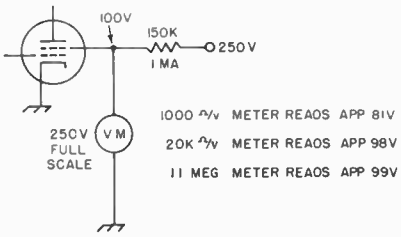

Fig. 17-3 — Effect of voltmeter resistance on accuracy of readings. It is assumed that the dc resistance of the screen circuit is constant at 100 kilohms. The actual current and voltage without the voltmeter connected are 1 mA and 100 volts. The voltmeter readings will differ because the different types of meters draw different amounts of current through the 150-kilohm resistor.

Multipliers

The required multiplier resistance is found by dividing the desired full-scale voltage by the current, in amperes, required for full-scale deflection of the meter alone. Strictly, the internal resistance of the meter should be subtracted from the value so found, but this is seldom necessary (except perhaps for very low ranges) because the meter resistance will be negligibly small compared with the multiplier resistance. An exception is when the instrument is already a voltmeter and is provided with an internal multiplier, in which case the multiplier resistance required to extend the range is

$$R = R_m(n - 1)$$

where R is the multiplier resistance, R_m is the total resistance of the instrument itself, and n is the factor by which the scale is to be multiplied. For

example, if a 1000-ohms-per-volt voltmeter having a calibrated range of 0-10 volts is to be extended to 1000 volts, R_m is 1000 X 10 = 10,000 ohms, n is 1000/10 = 100, and R = 10,000 (100 – 1) = 990,000 ohms.

When extending the range of a voltmeter or converting a low-range meter into a voltmeter, the rated accuracy of the instrument is retained only when the multiplier resistance is precise. Precision wire-wound resistors are used in the multipliers of high-quality instruments. These are relatively expensive, but the home constructor can do quite well with 1-percent-tolerance composition resistors. They should be "derated" when used for this purpose – that is, the actual power dissipated in the resistor should not be more than 1/4 to 1/2 the rated dissipation – and care should be used to avoid overheating the body of the resistor when soldering to the leads. These precautions will help prevent permanent change in the resistance of the unit.

Ordinary composition resistors are generally furnished in 10- or 5-percent tolerance ratings. If possible errors of this order can be accepted, resistors of this type may be used as multipliers. They should be operated below the rated power dissipation figure, in the interests of long-time stability.

DC MEASUREMENT CIRCUITS

Current Measurement with a Voltmeter

A current-measuring instrument should have very low resistance compared with the resistance of the circuit being measured; otherwise, inserting the instrument will cause the current to differ from its value with the instrument out of the circuit. (This may not matter if the instrument is left permanently in the circuit.) However, the resistance of many circuits in radio equipment is quite high and the circuit operation is affected little, if at all, by adding as much as a few hundred ohms in series. In such cases the voltmeter method of measuring current, shown in Fig. 17-4, is frequently convenient. A voltmeter (or low-range milliammeter provided with a multiplier and operating as a voltmeter) having a full-scale voltage range of a few volts is used to measure the voltage drop across a suitable value of resistance acting as a shunt.

The value of shunt resistance must be calculated from the known or estimated maximum current expected in the circuit (allowing a safe margin) and the voltage required for full-scale deflection of the meter with its multiplier.

Power

Power in direct-current circuits is determined by measuring the current and voltage. When these are known, the power is equal to the voltage in volts multiplied by the current in amperes. If the current is measured with a milliammeter, the reading of the instrument must be divided by 1000 to convert it to amperes.

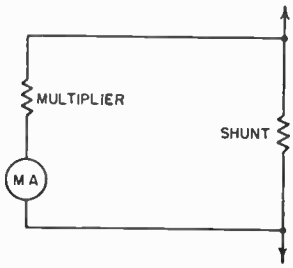

Fig. 17-4 – Voltmeter method of measuring current. This method permits using relatively large values of resistance in the shunt, standard values of fixed resistors frequently being usable. If the multiplier resistance is 20 (or more) times the shunt resistance, the error in assuming that all the current flows through the shunt will not be of consequence in most practical applications.

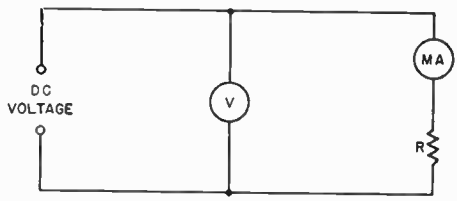

Fig. 17-5 – Measurement of power requires both current and voltage measurements; once these values are known the power is equal to the product – P = EI. The same circuit can be used for measurement of an unknown resistance.

The setup for measuring power is shown in Fig. 17-5, where R is any dc "load," not necessarily an actual resistor.

Resistance

Obviously, if both voltage and current are measured in a circuit such as that in Fig. 17-5 the value of resistance R (in case it is unknown) can be calculated from Ohm's Law. For accurate results, the internal resistance of the ammeter or milliammeter, MA, should be very low compared with the resistance, R, being measured, since the voltage read by the voltmeter, V, is the voltage across MA and R in series. The instruments and the dc voltage should be chosen so that the readings are in the upper half of the scale, if possible, since the percentage error is less in this region.

THE OHMMETER

Although Fig. 17-5 suffices for occasional resistance measurements, it is inconvenient when frequent measurements over a wide range of resistance are to be made. The device generally used for this purpose is the ohmmeter. This consists fundamentally of a voltmeter (or milliammeter, depending on the circuit used) and a small dry battery, the meter being calibrated so the value of an unknown resistance can be read

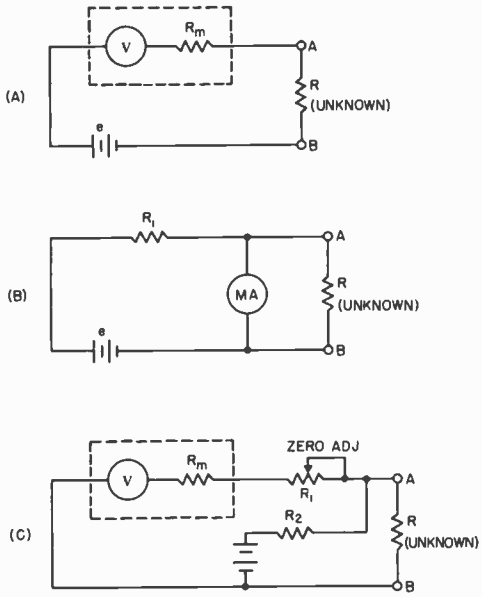

Fig. 17-6 – Ohmmeter circuits. Values are discussed in the text.

directly from the scale. Typical ohmmeter circuits are shown in Fig. 17-6. In the simplest type, shown in Fig. 17-6A, the meter and battery are connected in series with the unknown resistance. If a given deflection is obtained with terminals *A-B* shorted, inserting the resistance to be measured will cause the meter reading to decrease. When the resistance of the voltmeter is known, the following formula can be applied:

$$R = \frac{eR_m}{E} - R_m$$

where R is the resistance to be found,
e is the voltage applied (A-B shorted),
E is the voltmeter reading with R connected, and
R_m is the resistance of the voltmeter.

The circuit of Fig. 17-6A is not suited to measuring low values of resistance (below a hundred ohms or so) with a high-resistance voltmeter. For such measurements the circuit of Fig. 17-6B can be used. The unknown resistance is

$$R = \frac{I_2 R_m}{I_1 - I_2}$$

where R is the unknown,
R_m is the internal resistance of the milliammeter,
I_1 is the current with R disconnected from terminals A-B, and
I_2 is the current with R connected.

The formula is based on the assumption that the current in the complete circuit will be essentially constant whether or not the "unknown" terminals are short-circuited. This requires that R1 be very large compared with R_m – e.g., 3000 ohms for a 1-mA meter having an internal resistance of perhaps 50 ohms. A 3-volt battery would be necessary in this case in order to obtain a full-scale deflection with the "unknown" terminals open. R1 can be an adjustable resistor, to permit setting the open-terminals current to exact full scale.

A third circuit for measuring resistance is shown in Fig. 17-6C. In this case a high-resistance voltmeter is used to measure the voltage drop across a reference resistor, R2, when the unknown resistor is connected so that current flows through it, R2 and the battery in series. By suitable choice of R2 (low values for low-resistance, high values for high-resistance unknowns) this circuit will give equally good results on all resistance values in the range from one ohm to several megohms, provided that the voltmeter resistance, R_m, is always very high (50 times or more) compared with the resistance of R2. A 20,000-ohm-per-volt instrument (50-μA movement) is generally used. Assuming that the current through the voltmeter is negligible compared with the current through R2, the formula for the unknown is

$$R = \frac{eR2}{E} - R2$$

where R and $R2$ are as shown in Fig. 17-6C,
e is the voltmeter reading with A-B shorted, and
E is the voltmeter reading with R connected.

The "zero adjuster," R_1, is used to set the voltmeter reading exactly to full scale when the meter is calibrated in ohms. A 10,000-ohm variable resistor is suitable with a 20,000-ohms-per-volt meter. The battery voltage is usually 3 volts for ranges up to 100,000 ohms or so and 6 volts for higher ranges.

BRIDGE CIRCUITS

An important class of measurement circuits is the bridge, in which, essentially, a desired result is obtained by balancing the voltages at two different points in the circuit against each other so that there is zero potential difference between them. A voltmeter bridged between the two points will read zero (null) when this balance exists, but will indicate some definite value of voltage when the bridge is not balanced.

Bridge circuits are useful both on direct current and on ac of all frequencies. The majority of amateur applications is at radio frequencies, as shown later in this chapter. However, the principles of bridge operation are most easily introduced in terms of dc, where the bridge takes its simplest form.

The Wheatstone Bridge

The simple resistance bridge, known as the Wheatstone bridge, is shown in Fig. 17-7. All other bridge circuits – some of which are rather elaborate, especially those designed for ac – derive from this. The four resistors, R1, R2, R3, and R4 shown in A, are known as the bridge arms. For the

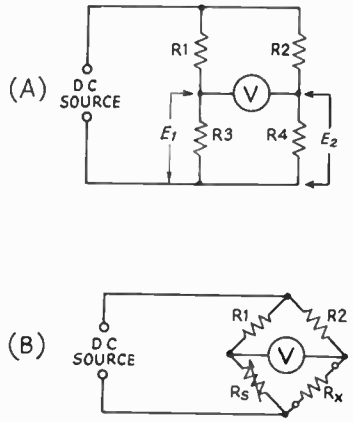

Fig. 17-7 — The Wheatstone bridge circuit. It is frequently drawn as at (B) for emphasizing its special function.

voltmeter reading to be zero, the voltages across R3 and R4 in series must add algebraically to zero; that is E1 must equal E2. R1R3 and R2R4 form voltage dividers across the dc source, so that if

$$\frac{R3}{R1 + R3} = \frac{R4}{R2 + R4}$$

E1 will equal E2.

The circuit is customarily drawn as shown at 17-7B when used for resistance measurement. The equation above can be rewritten

$$R_x = R_s \frac{R2}{R1}$$

to find R_x, the unknown resistance. R1 and R2 are frequently made equal; then the calibrated adjustable resistance (the standard), R_s, will have the same value as R_x when R_s is set to show a null on the voltmeter.

Note that the resistance *ratios*, rather than the actual resistance values, determine the voltage balance. However, the values do have important practical effects on the sensitivity and power consumption. The bridge sensitivity is the readiness with which the meter responds to small amounts of unbalance about the null point; the "sharper" the null the more accurate the setting of R_s at balance.

The Wheatstone bridge is rarely used by amateurs for resistance measurement, the ohmmeter being the favorite instrument for that purpose. However, it is worthwhile to understand its operation because it is the prototype of more complex bridges.

ELECTRONIC VOLTMETERS

It has been pointed out (Fig. 17-3) that for many purposes the resistance of a voltmeter must be extremely high in order to avoid "loading" errors caused by the current that necessarily flows through the meter. This tends to cause difficulty in measuring relatively low voltages (under perhaps 1000 volts) because a meter movement of given sensitivity takes a progressively smaller multiplier resistance as the voltage range is lowered.

The voltmeter resistance can be made independent of the voltage range by using vacuum tubes or field-effect transistors as electronic dc amplifiers between the circuit being measured and the actual indicator, which is usually a conventional meter movement. As the input resistance of the

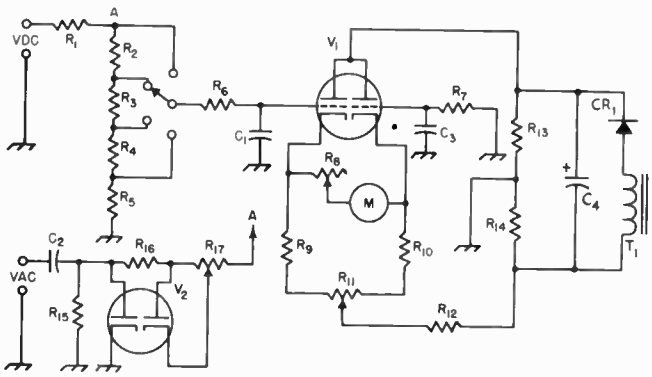

Fig. 17-8 — Vacuum-tube voltmeter circuit.

C1, C3 — .002- to .005-μF mica.
C2 — .01 μF, 1000 to 2000 volts, paper or mica.
C4 — 16 μF electrolytic, 150 volts.
CR1 — 400 PRV rectifier.
M — 0-200 microammeter.
R1 — 1 megohm, 1/2 watt.
R2-R5, incl. — To give desired voltage ranges, totaling 10 megohms.
R6, R7 — 2 to 3 megohms.
R8 — 10,000-ohm variable (calibrate).
R9, R10 — 2000 to 3000 ohms.
R11 — 5000- to 10,000-ohm control (zero set).
R12 — 10,000 to 50,000 ohms.
R13, R14 — App. 25,000 ohms. A 50,000-ohm slider-type wire-wound can be used.
R15 — 10 megohms.
R16 — 3 megohms.
R17 — 10-megohm variable.
T1 — 130-volt 15-mA transformer (only secondary shown).
V1 — Dual triode, 12AU7A.
V2 — Dual diode, 6AL5.

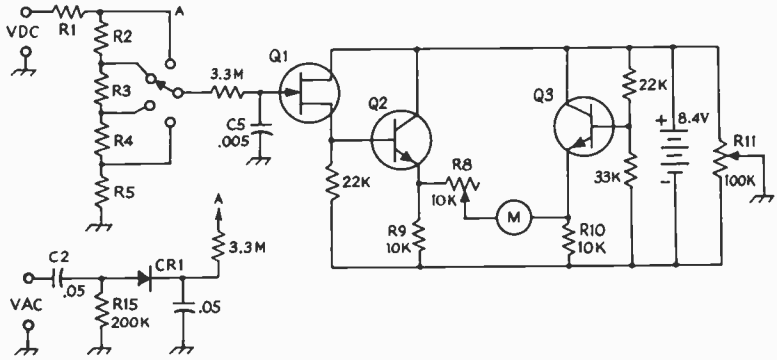

Fig. 17-9 — Electronic voltmeter using field-effect transistor for high input resistance. Components having the same functions as in the VTVM circuit of Fig. 17-8 carry the same designations. (Circuit is basic voltmeter circuit of the Heathkit IM-17.)
CR1 — Silicon diode.
Q1 — Field-effect transistor.
Q2, Q3 — Small-signal audio type.

electronic devices is extremely high – hundreds of megohms – they have essentially no loading effect on the circuit to which they are connected. They do, however, require a closed dc path in their input circuits (although this path can have very high resistance) and are limited in the amplitude of voltage that their input circuits can handle. Because of this, the device actually measures a small voltage across a portion of a high-resistance voltage divider connected to the circuit being measured. Various voltage ranges are obtained by appropriate taps on the voltage divider.

In the design of electronic voltmeters it has become practically standard to use a voltage divider having a resistance of 10 megohms, tapped as required, in series with a 1-megohm resistor incorporated in a probe that makes the actual contact with the "hot" side of the circuit under measurement. The total voltmeter resistance, including probe, is therefore 11 megohms. The 1-megohm probe resistor serves to isolate the voltmeter circuit from the "active" circuit.

The Vacuum-Tube Voltmeter

A typical vacuum-tube voltmeter (VTVM) circuit is given in Fig. 17-8. A dual triode, V1, is arranged so that, with no voltage applied to the left-hand grid, equal currents flow through both sections. Under this condition the two cathodes are at the same potential and no current flows through M. The currents can be adjusted to balance by potentiometer, R11, which takes care of variations in the tube sections and in the values of cathode resistors R9 and R10. When a positive dc voltage is applied to the left-hand grid the current through that tube section increases, so the current balance is upset and the meter indicates. The sensitivity of the meter is regulated by R8, which serves to adjust the calibration. R12, common to the cathodes of both tube sections, is a feedback resistor that stabilizes the system and makes the readings linear. R6 and C1 form a filter for any ac component that may be present, and R6 is balanced by R7 connected to the grid of the second tube section.

Values to be used in the circuit depend considerably on the supply voltage and the sensitivity of the meter, M. R12, and R13-R14, should be adjusted by trial so that the voltmeter circuit can be brought to balance, and to give full-scale deflection on M with about 3 volts applied to the left-hand grid (the voltage chosen for this determines the lowest voltage range of the instrument). The meter connections can be reversed to read voltages that are negative with respect to ground.

The small circuit associated with V2 is for ac measurements, as described in a later section.

As compared with conventional dc instruments, the VTVM has the disadvantages of requiring a source of power for its operation, and generally must have its "cold" terminal grounded in order to operate reliably. It is also somewhat susceptible to erratic readings from rf pickup when used in the vicinity of a transmitter, and in such cases may require shielding. However, its advantages outweigh these disadvantages in many applications.

The FET Voltmeter

The circuit of an electronic voltmeter using a field-effect transistor as an input device is shown in Fig. 17-9. Allowing for the differences between vacuum tubes and semiconductors, the operation of this circuit is analogous to that of Fig. 17-8. Transistors Q2 and Q3 correspond to the dual triode in the VTVM circuit, but since the input resistance of Q2 is fairly low, it is preceded by an FET, Q1, with source-coupled output. Note that in this circuit the "zero" or current-balance control, R11, varies the gate bias on Q1 by introducing an adjustable positive voltage in series with the source. This arrangement permits applying the adjustable bias to the gate through the voltmeter range divider, with no other provision needed for completing the dc gate-source path.

The small circuit associated with CR1 is for ac voltage measurement, to be discussed later.

As the power supply for the FET voltmeter is a self-contained battery, the grounding restrictions associated with a VTVM do not apply. The

instrument can, however, be susceptible to rf fields if not shielded and grounded.

Electronic Ohmmeters

Most commercial electronic voltmeters include provision for measuring resistance and ac voltage, in addition to dc voltage. The basic ohmmeter circuit generally used is that of Fig. 17-6C. Since for practical purposes the input resistance of the vacuum tube or FET can be assumed to approach infinity, electronic ohmmeters are capable of measuring resistances in the hundreds of megohms – a much higher range than can be reached with an ordinary microammeter.

AC INSTRUMENTS AND CIRCUITS

Although purely electromagnetic instruments that operate directly from alternating current are available, they are seen infrequently in present-day amateur equipment. For one thing, their use is not feasible above power-line frequencies.

Practical instruments for audio and radio frequencies generally use a dc meter movement in conjunction with a rectifier. Voltage measurements suffice for nearly all test purposes. Current, as such, is seldom measured in the af range. When rf current is measured the instrument used is a thermocouple milliammeter or ammeter.

The Thermocouple Meter

In a thermocouple meter the alternating current flows through a low-resistance heating element. The power lost in the resistance generates heat which warms a "thermocouple," a junction of certain dissimilar metals which has the property of developing a small dc voltage when heated. This voltage is applied to a dc milliammeter calibrated in suitable ac units. The heater-thermocouple-dc meter combination is usually housed in a regular meter case.

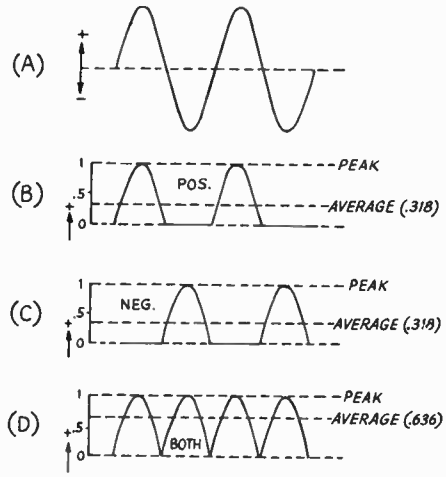

Fig. 17-11 – Sine-wave alternating current or voltage (A), with half-wave rectification of the positive half cycle (B) and negative half cycle (C). D – full-wave rectification. Average values are shown with relation to a peak value of 1.

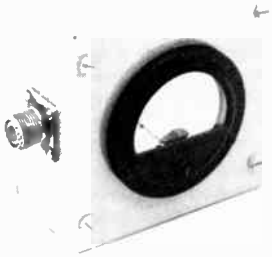

Fig. 17-10 – Rf ammeter mounted in a Minibox, with connectors for placing the meter in series with a coaxial line. A bakelite-case meter should be used to minimize shunt capacitance (which introduces error) although a metal-case meter can be used if mounted on bakelite sheet with a large cut-out in the case around the rim. The meter can be used for rf power measurements ($P = I^2R$) when connected between a transmitter and a nonreactive load of known resistance.

Thermocouple meters can be obtained in ranges from about 100 mA to many amperes. Their useful upper frequency limit is in the neighborhood of 100 MHz. Their principal value in amateur work is in measuring current into a known load resistance for calculating the rf power delivered to the load. A suitable mounting for this is shown in Fig. 17-10, for use in coaxial lines.

RECTIFIER INSTRUMENTS

The response of a rectifier-type meter is proportional (depending on the design) to either the peak amplitude or average amplitude of the rectified ac wave, and never directly responsive to the rms value. The meter therefore cannot be calibrated in rms without preknowledge of the relationship that happens to exist between the "real" reading and the rms value. This relationship, in general, is not known, except in the case of single-frequency ac (a sine wave). Very many practical measurements involve nonsinusoidal wave forms, so it is necessary to know what kind of instrument you have, and what it is actually

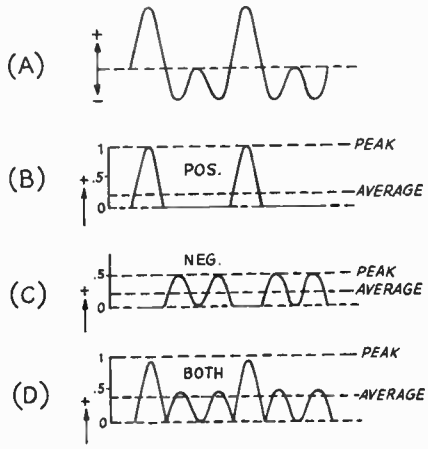

Fig. 17-12 — Same as Fig. 17-11 for an unsymmetrical waveform. The peak values are different with positive and negative half-cycle rectification.

reading, in order to make measurements intelligently.

Peak and Average with Sine-Wave Rectification

Fig. 17-11 shows the relative peak and average values in the outputs of half- and full-wave rectifiers (see power-supply chapter for further details). As the positive and negative half cycles of the sine wave have the same shape (A), half-wave rectification of either the positive half (B) or the negative half (C) gives exactly the same result. With full-wave rectification (D) the peak is still the same, but the average is doubled, since there are twice as many half cycles per unit of time.

Unsymmetrical Wave Forms

A nonsinusoidal waveform is shown in Fig. 17-12A. When the positive half cycles of this wave are rectified the peak and average values are as shown at B. If the polarity is reversed and the negative half cycles are rectified the peak value is different but the average value is unchanged. The fact that the average of the positive side is equal to the average of the negative side is true of *all* ac waveforms, but different waveforms have different averages. Full-wave rectification of such a "lop-sided" wave doubles the average value, but the peak reading is always the same as it is with the half cycle that produces the *highest* peak in half-wave rectification.

Effective-Value Calibration

The actual scale calibration of commercially-made rectifier-type voltmeters is very often (almost always, in fact) in terms of rms values. For sine waves this is satisfactory, and useful since rms is the standard measure at power-line frequency. It is also useful for many rf applications where the waveform is often closely sinusoidal. But in other cases, particularly in the af range, the error may be considerable when the waveform is not pure.

Turn-Over

From Fig. 17-12 it is apparent that the calibration of an average-reading meter will be the same whether the positive or negative sides are rectified. A half-wave *peak*-reading instrument, however, will indicate different values when its connections to the circuit are reversed (turn-over effect). Very often readings are taken both ways, in which case the sum of the two is the peak-to-peak value, a useful figure in much audio and video work.

Average- and Peak-Reading Circuits

The basic difference between average- and peak-reading rectifier circuits is that in the former the output is not filtered while in the latter a filter capacitor is charged up to the peak value of the output voltage. Fig. 17-13A shows typical average-reading circuits, one half-wave and the other full-wave. In the absence of dc filtering the meter responds to wave forms such as are shown at B, C and D in Figs. 17-11 and 17-12, and since the inertia of the pointer system makes it unable to follow the rapid variations in current, it averages them out mechanically.

In Fig. 17-13A CR1 actuates the meter; CR2 provides a low-resistance dc return in the meter circuit on the negative half cycles. R1 is the voltmeter multiplier resistance. R2 forms a voltage

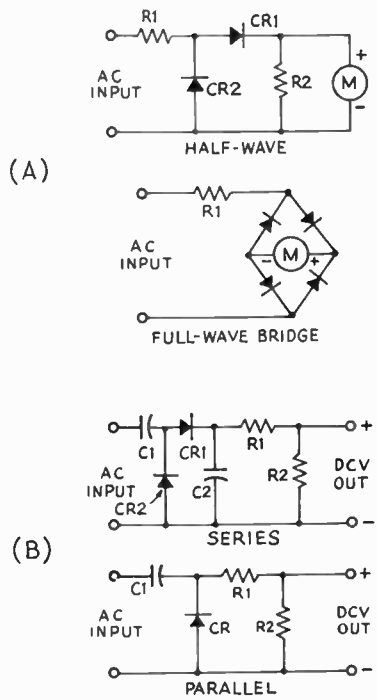

Fig. 17-13 — A — Half-wave and full-wave rectification for an instrument intended to operate on average values. B — half-wave circuits for a peak-reading meter.

divider with R1 (through CR1) which prevents more than a few ac volts from appearing across the rectifier-meter combination. A corresponding resistor can be used across the full-wave bridge circuit.

In these two circuits no provision is made for isolating the meter from any dc voltage that may be on the circuit under measurement. The error caused by this can be avoided by connecting a large capacitance in series with the "hot" lead. The reactance must be low compared with the meter impedance (see next section) in order for the full ac voltage to be applied to the meter circuit. As much as 1 μF may be required at line frequencies with some meters. The capacitor is not usually included in a VOM.

Series and shunt peak-reading circuits are shown in Fig. 17-13B. Capacitor C1 isolates the rectifier from dc voltage on the circuit under measurement. In the series circuit (which is seldom used) the time constant of the C2R1R2 combination must be very large compared with the period of the lowest ac frequency to be measured; similarly with C1R1R2 in the shunt circuit. The reason is that the capacitor is charged to the peak value of voltage when the ac wave reaches its maximum, and then must hold the charge (so it can register on a dc meter) until the next maximum of the same polarity. If the time constant is 20 times the ac period the charge will have decreased by about 5 percent by the time the next charge occurs. The *average* drop will be smaller, so the error is appreciably less. The error will decrease rapidly with increasing frequency, assuming no change in the circuit values, but will increase at lower frequencies.

In Fig. 17-13B R1 and R2 form a voltage divider which reduces the peak dc voltage to 71 percent of its actual value. This converts the peak reading to rms on sine-wave ac. Since the peak-reading circuits are incapable of delivering appreciable current without considerable error, R2 is usually the 11-megohm input resistance of an electronic voltmeter. R1 is therefore approximately 4.7 megohms, making the total resistance approach 16 megohms. A capacitance of .05 μF is sufficient for low audio frequencies under these conditions. Much smaller values of capacitance suffice for radio frequencies, obviously.

Voltmeter Impedance

The impedance of the voltmeter at the frequency being measured may have an effect on the accuracy similar to the error caused by the resistance of a dc voltmeter, as discussed earlier. The ac meter acts like a resistance in prallel with a capacitance, and since the capacitive reactance decreases with increasing frequency, the impedance also decreases with frequency. The resistance is subject to some variation with voltage level, particularly at very low voltages (of the order of 10 volts or less) depending upon the sensitivity of the meter movement and the kind of rectifier used.

The ac load resistance represented by a diode rectifier is approximately equal to one-half its dc load resistance. In Fig. 17-13A the dc load is essentially the meter resistance, which is generally quite low compared with the multiplier resistance R1, so the total resistance will be about the same as the multiplier resistance. The capacitance depends on the components and construction, test lead length and disposition, and such factors. In general, it has little or no effect at power-line and low audio frequencies, but the ordinary VOM loses accuracy at the higher audio frequencies and is of little use at rf. For radio frequencies it is necessary to use a rectifier having very low inherent capacitance.

Similar limitations apply to the peak-reading circuits. In the parallel circuit the resistive component of the impedance is smaller than in the series circuit, since the dc load resistance, R1R2, is directly across the circuit being measured, and is therefore in parallel with the diode ac load resistance. In both peak-reading circuits the effective capacitance may range from 1 or 2 to a few hundred pF. Values of the order of 100 pF are to be expected in electronic voltmeters of customary design and construction.

Linearity

Fig. 17-14, a typical current/voltage characteristic of a small semiconductor rectifier, indicates that the forward dynamic resistance of the diode is not constant, but rapidly decreases as the forward voltage is increased from zero. The transition from high to low resistance occurs at considerably less than 1 volt, but is in the range of voltage required by the associated dc meter. With an average-reading circuit the current tends to be proportional to the *square* of the applied voltage. This crowds the calibration points at the low end of the meter scale. For most measurement purposes, however, it is far more desirable for the output to be "linear;" that is, for the reading to be *directly* proportional to the applied voltage.

To achieve linearity it is necessary to use a relatively large load resistance for the diode – large enough so that this resistance, rather than the diode's own resistance, will govern the current flow. A linear or equally spaced scale is thus gained at the expense of sensitivity. The amount of resistance needed depends on the type of diode;

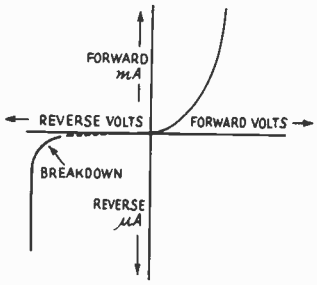

Fig. 17-14 – Typical semiconductor diode characteristic. Actual current and voltage values vary with the type of diode, but the forward-current curve would be in its steep part with only a volt or so applied. Note change in current scale for reverse current. Breakdown voltage, again depending on diode type, may range from 15 or 20 volts to several hundred.

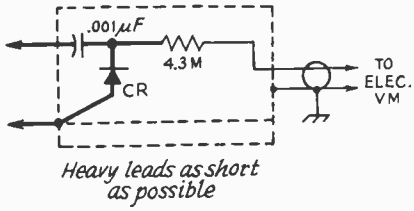

Fig. 17-15 — Rf probe circuit. CR is a small semiconductor rectifier, usually point-contact germanium. The resistor value, for exact voltage division to rms, should be 4.14 megohms, but standard values are generally used, including 4.7 megohms.

5000 to 50,000 ohms usually suffices for a germanium rectifier, depending on the dc meter sensitivity, but several times as much may be needed for silicon. The higher the resistance, the greater the meter sensitivity required; i.e., the basic meter must be a microammeter rather than a low-range milliammeter.

Reverse Current

When voltage is applied in the reverse direction there is a small leakage current in semiconductor diodes. This is equivalent to a resistance connected across the rectifier, allowing current to flow during the half cycle which should be completely nonconducting, and causing an error in the dc meter reading. This "back resistance" is so high as to be practically unimportant with silicon, but may be less than 100 kΩ with germanium.

The practical effect of back resistance is to limit the amount of resistance that can be used in the dc load resistance. This in turn affects the linearity of the meter scale.

The back resistance of vacuum-tube diodes is infinite, for practical purposes.

RF VOLTAGE

Special precautions must be taken to minimize the capacitive component of the voltmeter impedance at radio frequencies. If possible, the rectifier circuit should be installed permanently at the point where the rf voltage to be measured exists, using the shortest possible rf connections. The dc meter can be remotely located, however.

For general rf measurements an rf probe is used in conjunction with an electronic voltmeter, substituted for the dc probe mentioned earlier. The circuit of Fig. 17-15, essentially the peak-reading shunt circuit of Fig. 17-13B, is generally used. The series resistor, installed in the probe close to the rectifier, prevents rf from being fed through the probe cable to the electronic voltmeter, being helped in this by the cable capacitance. This resistor, in conjunction with the 10-megohm divider resistance of the electronic voltmeter, also reduces the peak rectified voltage to a dc value equivalent to the rms of the rf signal, to make the rf readings consistent with the regular ac calibration.

Of the diodes readily available to amateurs, the germanium point-contact type is preferred for rf applications. It has low capacitance (of the order of 1 pF) and in the high-back-resistance types the reverse current is not serious. The principal limitation is that its safe reverse voltage is only about 50-75 volts, which limits the rms applied voltage to 15 or 20 volts, approximately. Diodes can be connected in series to raise the overall rating.

Linearity at Radio Frequencies

The bypass or filter capacitance normally used in rf rectifier circuits is large enough, together with the resistance in the system, to have a time constant sufficient for peak readings. However, if the resistance is low (the load sometimes is just the microammeter or milliammeter alone) the *linearity* of the voltmeter will be affected as previously described, even if the time constant is fairly large. It is not safe to assume that the voltmeter is even approximately linear unless the load resistance is of the order of 10,000 ohms or greater.

Nonlinear voltmeters are useful as indicators, as where null indicators are called for, but should not be depended upon for actual measurement of voltage.

RF Power

Power at radio frequencies can be measured by means of an accurately-calibrated rf voltmeter connected across the load in which the power is being dissipated. If the load is a known pure resistance the power, by Ohm's Law, is equal to E^2/R, where E is the rms value of the voltage.

The method only indicates *apparent* power if the load is not a pure resistance. The load can be a terminated transmission line tuned, with the aid of bridge circuits such as are described in the next section, to act as a known resistance. An alternative load is a "dummy" antenna, a known pure resistance capable of dissipating the rf power safely.

AC BRIDGES

In its simplest form, the ac bridge is exactly the same as the Wheatstone bridge discussed earlier. However, complex impedances can be substituted for resistances, as suggested by Fig. 17-16A. The same bridge equation holds if Z is substituted for R in each arm. For the equation to be true, however, *the phase angles as well as the numerical values of the impedances must balance*; otherwise, a true null voltage is impossible to obtain. This means that a bridge with all "pure" arms (pure resistance or reactance) cannot measure complex impedances; a combination of R and X must be present in at least one arm besides the unknown.

The actual circuits of ac bridges take many forms, depending on the type of measurement intended and on the frequency range to be covered. As the frequency is raised stray effects (unwanted capacitances and inductances, principally) become more pronounced. At radio frequencies special attention must be paid to minimizing them.

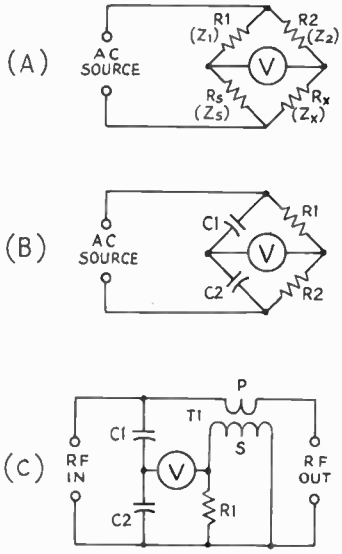

Fig. 17-16 – A – Generalized form of bridge circuit for either ac or dc. B – One form of ac bridge frequently used for rf measurements. C – SWR bridge for use in transmission lines. This circuit is often calibrated in power rather than voltage.

Most amateur-built oridges are used for rf measurements, especially SWR measurements on transmission lines. The circuits at B and C, Fig. 17-16, are favorites for this purpose. These basic forms are often modified considerably, as will be seen by the constructional examples later in the chapter.

Fig. 17-16B is useful for measuring both transmission lines and "lumped constant" components. Combinations of resistance and capacitance are often used in one or more arms; this may be required for eliminating the effects of stray capacitance.

Fig. 17-16C is used only on transmission lines, and only on those lines having the characteristic impedance for which the bridge is designed.

SWR Measurement – The Reflectometer

In measuring standing-wave ratio advantage is taken of the fact that the voltage on a transmission line consists of two components traveling in opposite directions. The power going from the transmitter to the load is represented by one voltage (designated "incident" or "forward") and the power reflected from the load is represented by the other. Because the relative amplitudes and phase relationships are definitely established by the line's characteristic impedance, its length and the load impedance in which it is terminated, a bridge circuit can separate the incident and reflected voltages for measurement. This is sufficient for determining the SWR. Bridges designed for this purpose are frequently called reflectometers.

Referring to Fig. 17-16A, if R1 and R2 are made equal, the bridge will be balanced when $R_X = R_S$. This is true whether R_X is an actual resistor or the input resistance of a perfectly matched transmission line, provided R_S is chosen to equal the characteristic impedance of the line. Even if the line is not properly matched, the bridge will still be balanced for power traveling *outward* on the line, since outward-going power sees only the Z_0 of the line until it reaches the load. However, power reflected back from the load does not "see" a bridge circuit, and the reflected voltage registers on the voltmeter. From the known relationship between the incident and reflected voltages the SWR is easily calculated:

$$SWR = \frac{V_0 + V_r}{V_0 - V_r}$$

where V_0 is the forward voltage and V_r is the reflected voltage. The forward voltage may be measured either by disconnecting R_X or shorting it.

The "Reflected Power Meter"

Fig. 17-16C makes use of mutual inductance between the primary and secondary of T1 to establish a balancing circuit. C1 and C2 form a voltage divider in which the voltage across C2 is in the same phase as the voltage at that point on the transmission line. The relative phase of the voltage across R1 is determined by the phase of the *current* in the line. If a pure resistance equal to the design impedance of the bridge is connected to the "RF Out" terminals, the voltages across R1 and C2 will be out of phase and the voltmeter reading will be minimum; if the *amplitudes* of the two voltages are also equal (they are made so by bridge adjustment) the voltmeter will read zero. Any other value of resistance or impedance connected to the "RF Out" terminals will result in a finite voltmeter reading. When used in a transmission line this reading is proportional to the reflected voltage. To measure the incident voltage the secondary terminals of T1 can be reversed. To function as described, the secondary leakage reactance of T1 must be very large compared to the resistance of R1.

Instruments of this type are usually designed for convenient switching between forward and reflected, and are often calibrated to read power in the specified characterisitic impedance. The net power transmission is equal to the incident power minus the reflected power.

Sensitivity vs. Frequency

In all of the circuits in Fig. 17-16 the sensitivity is independent of the applied frequency, within practical limits. Stray capacitances and couplings generally limit the performance of all three at the high-frequency end of the useful range. Fig. 17-16A will work right down to dc, but the low-frequency performance of Fig. 17-16B is degraded when the capacitive reactances become so large that voltmeter impedance becomes low in comparison (in all these bridge circuits, it is

assumed that the voltmeter impedance is high compared with the impedance of the bridge arms). In Fig. 17-16C the performance is limited at low frequencies by the fact that the transformer reactance decreases with frequency, so that eventually the reactance is not very high in comparison with the resistance of R1.

The "Monimatch"

A type of bridge which is quite simple to make, but in which the sensitivity rises directly with frequency, is the Monimatch and its various offspring. The circuit cannot be described in terms of lumped constants, as it makes use of the distrbuted mutual inductance and capacitance between the center conductor of a transmission line and a wire placed parallel to it. The wire is terminated in a resistance approximating the characteristic impedance of the transmission line at one end and feeds a diode rectifier at the other. A practical example is shown later in this chapter.

FREQUENCY MEASUREMENT

The regulations governing amateur operation require that the transmitted signal be maintained inside the limits of certain bands of frequencies.* The exact frequency need not be known, so long as it is not outside the limits. On this last point there are no tolerances: It is up to the individual amateur to see that he stays safely "inside."

This is not difficult to do, but requires some simple apparatus and the exercise of some care. The apparatus commonly used is the frequency-marker generator, and the method involves use of the station receiver, as in Fig. 17-17.

THE FREQUENCY MARKER

The marker generator in its simplest form is a high-stability oscillator generating a series of signals which, when detected in the receiver, mark the exact edges of the amateur assignments. It does this by oscillating at a low frequency that has harmonics falling on the desired frequencies.

All U.S. amateur band limits are exact multiples of 25 kHz, whether at the extremes of a band or at points marking the subdivisions between types of emission, license privileges, and so on. A 25-kHz fundamental frequency therefore will produce the desired marker signals if its harmonics at the higher frequencies are strong enough. But since harmonics appear at 25-kHz intervals throughout the spectrum, along with the desired markers, the problem of identifying a *particular* marker arises. This is easily solved if the receiver has a reasonably good calibration. If not, most marker circuits provide for a choice of fundamental outputs of 100 and 50 kHz as well as 25 kHz, so the question can be narrowed down to initial identification of 100-kHz intervals. From these, the desired 25-kHz (or 50-kHz) points can easily be spotted. Coarser frequency intervals are rarely required; there are usually signals available from stations of known frequency, and the 100-kHz points can be counted off from them.

Transmitter Checking

In checking one's own transmitter frequency the signal from the transmitter is first tuned in on the receiver and the dial setting at which it is heard is noted. Then the *nearest* marker frequencies above and below the transmitter signal are turned in and identified. The transmitter frequency is obviously between these two known frequencies.

If the marker frequencies are accurate, this is all that needs to be known – except that the transmitter frequency must not be so close to a band (or subband) edge that sideband frequencies, especially in phone transmission, will extend over the edge.

If the transmitter signal is "inside" a marker at the edge of an assignment, to the extent that there is an audible beat note with the receiver's BFO turned off, normal cw sidebands are safely inside the edge. (This statement does not take into account *abnormal* sidebands such as are caused by clicks and chirps.) For phone the "safety" allowance is usually taken to be about 3 kHz, the nominal width of one sideband. A frequency difference of this order can be estimated by noting the receiver dial settings for the two 25-kHz markers which bracket the signal and dividing 25 by the number of dial divisions between them. This will give the number of kHz per dial division.

Transceivers

The method described above is applicable when the receiver and transmitter are separate pieces of equipment. When a transceiver is used and the

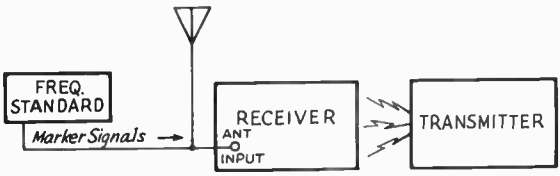

Fig. 17-17 — Setup for using a frequency standard. It is necessary that the transmitter signal be weak in the receiver — of the same order of strength as the marker signal from the standard. This requirement can usually be met by turning on just the transmitter oscillator, leaving all power off any succeeding stages. In some cases it may also be necessary to disconnect the antenna from the receiver.

* These limits depend on the type of emission and class of license held, as well as on international agreements. See the latest edition of *The Radio Amateur's License Manual* for current status.

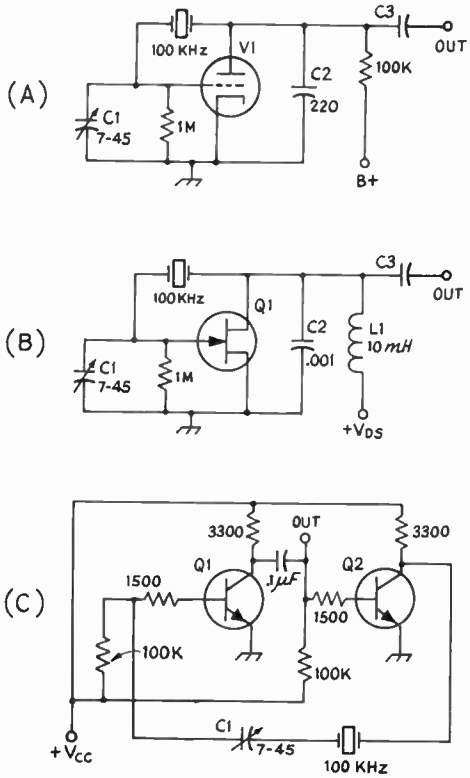

Fig. 17-18 – Three simple 100-kHz oscillator circuits. C is the most suitable of available transistor circuits (for marker generators) and is recommended where solid-state is to be used. In all three circuits C1 is for fine frequency adjustment. The output coupling capacitor, C3, is generally small – 20 to 50 pF – a compromise to avoid loading the oscillator by the receiver antenna input while maintaining adequate coupling for good harmonic strength.

transmitting frequency is automatically the same as that to which the receiver is tuned, setting the tuning dial to a spot between two known marker frequencies is all that is required.

The proper dial settings for the markers are those at which, with the BFO on, the signal is tuned to *zero* beat – the spot where the beat disappears as the tuning makes the beat tone progressively lower. Exact zero beat can be determined by a very slow rise and fall of background noise, caused by a beat of a cycle or less per second.

FREQUENCY-MARKER CIRCUITS

The basic frequency-determining element in most amateur frequency markers is a 100-kHz crystal. Although the marker generator should produce harmonics at 25-kHz and 50-kHz intervals, crystals (or other high-stability devices) for frequencies lower than 100 kHz are expensive and difficult to obtain. However, there is really no need for them, since it is easy to divide the basic frequency down to any figure one desires; 50 and 25 kHz require only two successive divisions, each by 2. In the division process, the harmonic output of the generator is greatly enhanced, making the generator useful at frequencies well into the vhf range.

Simple Crystal Oscillators

Fig. 17-18 illustrates a few of the simpler circuits. Fig. 17-18A is a long-time favorite where vacuum tubes are used and is often incorporated in receivers. C1 in this and the other circuits is used for exact adjustment of the oscillating frequency to 100 kHz, which is done by using the receiver for comparing one of the oscillator's harmonics with a standard frequency transmitted by WWV, WWVH, or a similar station.

Fig. 17-18B is a field-effect transistor analog of the vacuum-tube circuit. However, it requires a 10-mH coil to operate well, and since the harmonic output is not strong at the higher frequencies the circuit is given principally as an example of a simple transistor arrangement. A much better oscillator is shown at C. This is a cross-connected pair of transistors forming a multivibrator of the "free-running" or "astable" type, locked at 100 kHz by using the crystal as one of the coupling elements. While it can use two separate bipolar transistors as shown, it is much simpler to use an integrated-circuit dual gate, which will contain all the necessary parts except the crystal and capacitors and is considerably less expensive, as well as more compact, than the separate components. An example is shown later in the chapter.

Frequency Dividers

Electronic division is accomplished by a "bistable" flip-flop or cross-coupled circuit which produces one output change for every two impulses applied to its input circuit, thus dividing the applied frequency by 2. All division therefore must be in terms of some power of 2. In practice this is no handicap since with modern integrated-circuit flip-flops, circuit arrangements can be worked out for division by any desired number.

As flip-flops and gates in integrated circuits come in compatible series – meaning that they work at the same supply voltage and can be directly connected together – a combination of a dual-gate version of Fig. 17-18C and a dual flip-flop make an attractively simple combination for the marker generator.

There are several different basic types of flip-flops, the variations having to do with methods of driving (dc or pulse operation) and control of the counting function. Information on the operating principles and ratings of a specific type usually can be obtained from the manufacturer. The counting-control functions are not needed in using the flip-flop in a simple marker generator, although they come into play when dividing by some number other than a power of 2.

Frequency Standards

The difference between a marker generator and a frequency standard is that in the latter special

pains are taken to make the oscillator frequency as stable as possible in the face of variations in temperature, humidity, line voltage, and other factors which could cause a small change in frequency.

While there are no definite criteria that distinguish the two in this respect, a circuit designated as a "standard" for amateur purposes should be capable of maintaining frequency within at least a few parts per million under normal variations in ambient conditions, without adjustment. A simple marker generator using a 100-kHz crystal can be expected to have frequency variations 10 times (or more) greater under similar conditions. It can of course be adjusted to exact frequency at any time the WWV (or equivalent) signal is available.

The design considerations of high-precision frequency standards are outside the scope of this chapter, but information is available from time to time in periodicals.

OTHER METHODS OF FREQUENCY CHECKING

The simplest possible frequency-measuring device is a parallel *LC* circuit, tunable over a desired frequency range and having its tuning dial calibrated in terms of frequency. It can be used only for checking circuits in which at least a small amount of rf power is present, because the energy required to give a detectable indication is not available in the *LC* circuit itself; it has to be extracted from the circuit being measured; hence the name absorption frequency meter. It will be observed that what is actually measured is the frequency of the rf *energy, not* the frequency to which the circuit in which the energy is present may be tuned.

The measurement accuracy of such an instrument is low, compared with the accuracy of a marker generator, because the *Q* of a practicable *LC* circuit is not high enough to make precise reading of the dial possible. Also, any two circuits coupled together react on each others' tuning. (This can be minimized by using the loosest coupling that will give an adequate indication.)

The absorption frequency meter has one useful advantage over the marker generator – it will respond *only* to the frequency to which it is tuned,

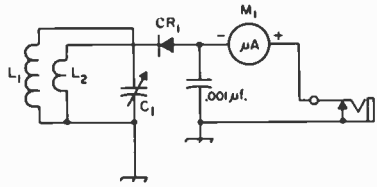

Fig. 17-19A – Absorption frequency-meter circuit. The closed-circuit phone jack may be omitted if listening is not wanted; in that case the positive terminal of M1 goes to common ground.

or to a band of frequencies very close to it. Thus there is no harmonic ambiguity, as there sometimes is when using a marker generator.

Absorption Circuit

A typical absorption frequency-meter circuit is shown in Fig. 17-19. In addition to the adjustable tuned circuit, L1C1, it includes a pickup coil, L2, wound over L1, a high-frequency semiconductor diode, CR1, and a microammeter or low-range (usually not more than 0-1 mA) milliammeter. A phone jack is included so the device can be used for listening to the signal.

The sensitivity of the frequency meter depends on the sensitivity of the dc meter movement and the size of L2 in relation to L1. There is an optimum size for this coil which has to be found by experiment. An alternative is to make the rectifier connection to an adjustable tap on L1, in which case there is an optimum tap point. In general, the rectifier coupling should be a little *below* (that is, less tight) the point that gives maximum response, since this will make the indications sharper.

Calibration

The absorption frequency meter must be calibrated by taking a series of readings on various frequencies from circuits carrying rf power, the frequency of the rf energy first being determined by some other means such as a marker generator and receiver. The setting of the dial that gives the highest meter indication is the calibration point for that frequency. This point should be determined by tuning through it with loose coupling to the circuit being measured.

OTHER INSTRUMENTS AND MEASUREMENTS

Many measurements require a source of ac power of adjustable frequency (and sometimes adjustable amplitude as well) in addition to what is already available from the transmitter or receiver. Rf and af test oscillators, for example, provide signals for purposes such as receiver alignment, testing of phone transmitters, and so on. Another valuable adjunct to the station is the oscilloscope, especially useful for checking phone modulation.

Rf Oscillators for Circuit Alignment

Receiver testing and alignment, covered in an earlier chapter, uses equipment common to ordinary radio service work. Inexpensive rf signal generators are available, both complete and in kit form. However, any source of signal that is weak enough to avoid overloading the receiver usually will serve for alignment work. The frequency marker generator is a satisfactory signal source. In addition, its frequencies, although not continuously adjustable, are known far more precisely, since the usual signal-generator calibration is not highly accurate. For rough work the dip meter described in the next section will serve.

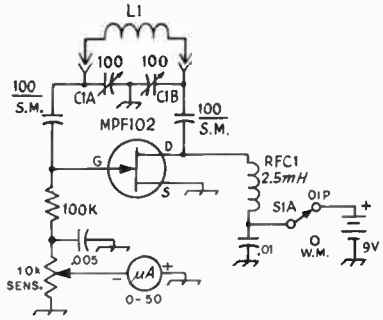

Fig. 17-19B — An FET source-dipper circuit suitable for use from 1.5 to 50 MHz. For operation at vhf and uhf the value of C1 should be made smaller, RFC1 would be a vhf type, and the bypass capacitors would be smaller in value. For uhf use Q1 would be changed to a uhf-type FET, a 2N4416 or similar.

THE DIP METER

The dip meter reverses the absorption-wavemeter procedure in that *it* supplies the rf power by incorporating a tunable oscillator from which the circuit being checked absorbs energy when this circuit and the oscillator are tuned to the same frequency and coupled together. In the vacuum-tube version the energy absorption causes a decrease or "dip" in the oscillator's rectified grid current, measured by a dc microammeter.

The same principle can be applied to solid-state oscillators. In some transistor versions the oscillator rf power is rectified by a diode to provide a meter indication. This technique can result in "dead spots" in the tuning range if the oscillator power is too low to enable the diode to conduct at all times. The circuit of Fig. 17-19B avoids the problem by measuring the changes in source current. In the W.M. (wavemeter) position of S1 the gate-source junction of Q1 serves as the detector diode.

Each tuning range of the dipper should overlap to provide sufficient coverage to check circuits of unknown resonant frequency. Plug-in coils are normally used to allow continuous coverage from 1.5 to at least 250 MHz.

Calibration

A dipper should have reasonably accurate calibration. Calibration of the dipper dial can be effected by monitoring the dipper output signal with a calibrated receiver. Make sure the *fundamental* frequency of the dipper is being used during calibration.

Operating the Dip Meter

The dip meter will check only resonant circuits, since nonresonant circuits or components will not absorb energy at a specific frequency. The circuit may be either lumped or linear (a transmission-line type circuit) provided only that it has enough Q to give sufficient coupling to the dip-meter coil for detectable absorption of rf energy. Generally the coupling is principally inductive, although at times there may be sufficient capacitive coupling between the meter and a circuit point that is at relatively high potential with respect to ground to permit a reading. For inductive coupling, maximum energy absorption will occur when the meter

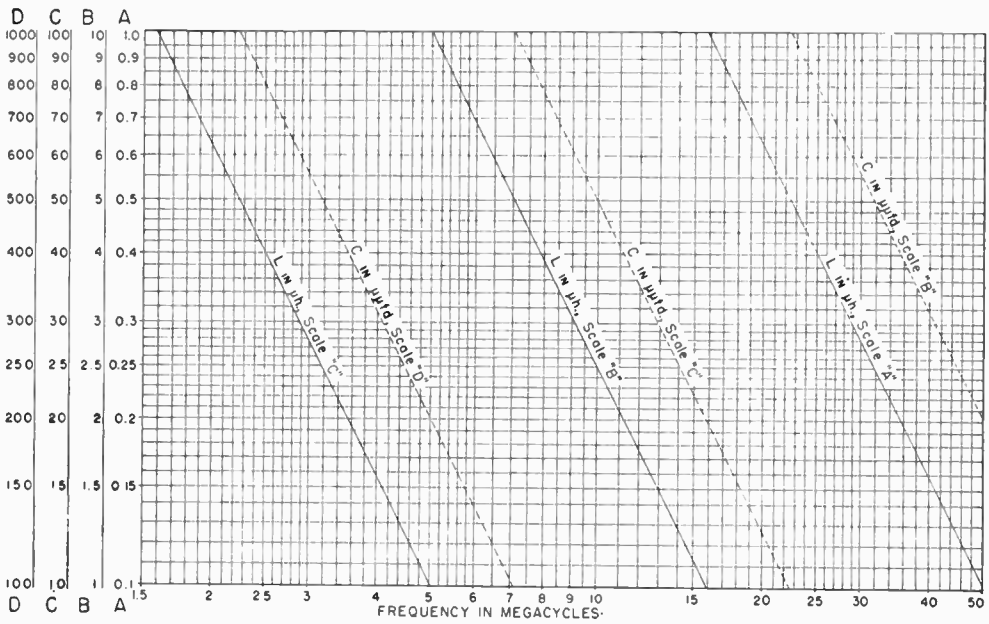

Fig. 17-20 — Chart for determining unknown values of L and C in the range of 0.1 to 100 μH and 2 to 1000 pF, using standards of 100 pF and 5 μH.

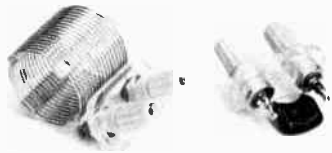

Fig. 17-21 — A convenient mounting, using binding-post plates, for *L* and *C* standards made from commercially available parts. The capacitor is a 100-pF silver mica unit, mounted so the lead length is as nearly zero as possible. The inductance standard, 5 μH, is 17 turns of coil stock, 1-inch diameter, 16 turns per inch.

is coupled to a coil (the same coupling rules that apply to any two coils are operative here) in the tuned circuit being checked, or to a high-current point in a linear circuit.

Because of distributed capacitance (and sometimes inductance) most circuits resonant at the lower amateur frequencies will show quasi-linear-type resonances at or close to the vhf region. A vhf dip meter will uncover these, often with beneficial results since such "parasitic" resonances can cause unwanted responses at harmonics of the intended frequency, or be responsible for parasitic oscillations in amplifiers. Caution must be used in checking transmission lines or antennas – and, especially, combinations of antenna and line – on this account, because these linear circuits have well-defined series of harmonic responses, based on the lowest resonant frequency, which may lead to false conclusions respecting the behavior of the system.

Measurements with the dip meter are essentially frequency measurements, and for best accuracy the coupling between the meter and circuit under checking must be as loose as will allow a perceptible dip. In this respect the dip meter is similar to the absorption wavemeter.

Measuring Inductance and Capacitance with the Dip Meter

With a carefully calibrated dip meter, properly operated, inductance and capacitance in the values ordinarily used for the 1.5-50 MHz range can be measured with ample accuracy for practical work. The method requires two accessories: an inductance "standard" of known value, and a capacitance standard also known with reasonable accuracy. Values of 100 pF for the capacitance and 5 μH for the inductance are convenient. The chart of Fig. 17-20 is based on these values.

The *L* and *C* standards can be quite ordinary components. A small silver-mica capacitor is satisfactory for the capacitance, since the customary tolerance is ±5 percent. The inductance standard can be cut from commercial machine-wound coil stock; if none is available, a homemade equivalent in diameter, turn spacing, and number of turns can be substituted. The inductance will be 5 μH within amply close tolerances if the specifications in Fig. 17-21 are followed closely. In any case, the inductance can easily be adjusted to the proper value; it should resonate with the 100-pF capacitor at 7100 kHz.

The setup for measuring an unknown is shown in Fig. 17-22. Inductance is measured with the unknown connected to the standard capacitance. Couple the dip meter to the coil and adjust the meter for the dip, using the loosest possible coupling that will give a usable indication. Similar procedure is followed for capacitance measurement, except that the unknown is connected to the standard inductance. Values are read off the chart for the frequency indicated by the dip meter.

Coefficient of Coupling

The same equipment can be used for measurement of the coefficient of coupling between two coils. This simply requires two measurements of inductance (of *one* of the coils) with the coupled coil first open-circuited and then short-circuited. Connect the 100-pF standard capacitor to one coil and measure the inductance with the terminals of the second coil open. Then short the terminals of the second coil and again measure the inductance of the first. The coefficient of coupling is given by

$$k = \sqrt{1 - \frac{L_2}{L_1}}$$

where k = coefficient of coupling
$L1$ = inductance of first coil with terminals of second coil open
$L2$ = inductance of first coil with terminals of second coil shorted.

AUDIO-FREQUENCY OSCILLATORS

Tests requiring an audio-frequency signal generally call for one that is a reasonably good sine wave, and the best oscillator circuits for this are *RC*-coupled, operating as nearly as possible as Class A amplifiers. Variable frequency covering the entire audio range is needed for determining frequency response of audio amplifiers, but this is

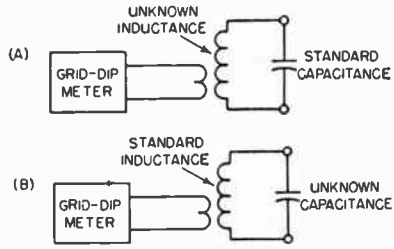

Fig. 17-22 — Setups for measuring inductance and capacitance with the dip meter.

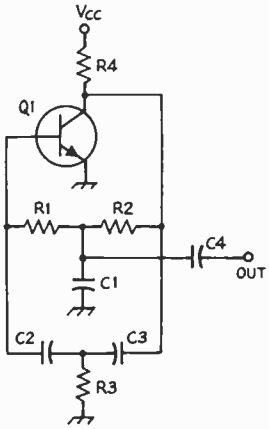

Fig. 17-23 — Twin-T audio oscillator circuit. Representative values for R1-R2 and C1 range from 18kΩ and .05 μF for 750 Hz to 15kΩ and .02 μF for 1800 Hz. For the same frequency range, R3 and C2-C3 vary from 1800 ohms and .02 μF to 1500 ohms and .01 μF. R4 should be approximately 3300 ohms. C4, the output coupling capacitor, can be .05 μF for high-impedance loads.

a relatively unimportant type of test in amateur equipment. The variable-frequency af signal generator is best purchased complete; kits are readily available at prices that compare very favorably with the cost of parts.

For most phone-transmitter testing, and for simple trouble shooting in af amplifiers, an oscillator generating one or two frequencies with good wave form is adequate. A "two-tone" (dual) oscillator is particularly useful for testing sideband transmitters, and a constructional example is found later in the chapter.

The circuit of a simple *RC* oscillator useful for general test purposes is given in Fig. 17-23. This "Twin-T" arrangement gives a wave form that is satisfactory for most purposes, and by choice of circuit constants the oscillator can be operated at any frequency in the usual audio range. R1, R2 and C1 form a low-pass type network, while C2C3R3 is high-pass. As the phase shifts are opposite, there is only one frequency at which the total phase shift from collector to base is 180 degrees, and oscillation will occur at this frequency. Optimum operation results when C1 is approximately twice the capacitance of C2 or C3, and R3 has a resistance about 0.1 that of R1 or R2 (C2 = C3 and R1 = R2). Output is taken across C1, where the harmonic distortion is least. A relatively high-impedance load should be used – 0.1 megohm or more.

A small-signal af transistor is suitable for Q1. Either npn or pnp types can be used, with due regard for supply polarity. R4, the collector load resistor, must be large enough for normal amplification, and may be varied somewhat to adjust the operating conditions for best waveform.

RESISTORS AT RADIO FREQUENCIES

Measuring equipment, in some part of its circuit, often requires essentially pure resistance – that is, resistance exhibiting only negligible reactive effects on the frequencies at which measurement is intended. Of the resistors available to amateurs, this requirement is met only by small composition (carbon) resistors. The inductance of wire-wound resistors makes them useless for amateur frequencies.

The reactances to be considered arise from the inherent inductance of the resistor itself and its leads, and from small stray capacitances from one part of the resistor to another and to surrounding conductors. Although both the inductance and capacitance are small, their reactances become increasingly important as the frequency is raised. Small composition resistors, properly mounted, show negligible capacitive reactance up to 100 MHz or so in resistance values up to a few hundred ohms; similarly, the inductive reactance is negligible in values *higher* than a few hundred ohms. The optimum resistance region in this respect is in the 50 to 200-ohm range, approximately.

Proper mounting includes reducing lead length as much as possible, and keeping the resistor separated from other resistors and conductors. Care must also be taken in some applications to ensure that the resistor, with its associated components, does not form a closed loop into which a voltage could be induced magnetically.

So installed, the resistance is essentially pure. In composition resistors the skin effect is very small, and the rf resistance up to vhf is very closely the same as the dc resistance.

Dummy Antennas

A dummy antenna is simply a resistor that, in impedance characteristics, can be substituted for an antenna or transmission line for test purposes. It permits leisurely transmitter testing without radiating a signal. (The amateur regulations strictly limit the amount of "on-the-air" testing that may be done.) It is also useful in testing receivers, in that electrically it resembles an antenna, but does not pick up external noise and signals, a desirable feature in some tests.

For transmitter tests the dummy antenna must be capable of dissipating safely the entire power output of the transmitter. Since for most testing it is desirable that the dummy simulate a perfectly-matched transmission line, it should be a pure resistance, usually of approximately 52 or 73

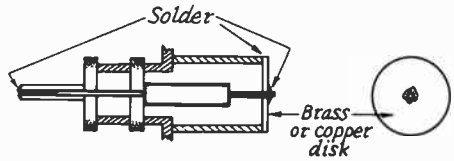

Fig. 17-24 — Dummy antenna made by mounting a composition resistor in a PL-259 coaxial plug. Only the inner portion of the plug is shown; the cap screws on after the assembly is completed.

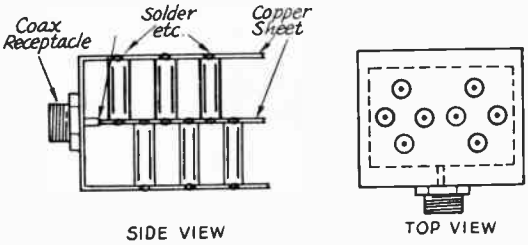

Fig. 17-25 – Using resistors in series-parallel to increase the power rating of a small dummy antenna. Mounted in this way on pieces of flat copper, inductance is reduced to a minimum. Eight 100-ohm 2-watt composition resistors in two groups, each four resistors in parallel, can be connected in series to form a 50-ohm dummy. The open construction shown permits free air circulation. Resistors drawn heavy are in one "deck"; light ones are in the other.

ohms. This is a severe limitation in home construction, because nonreactive resistors of more than a few watts rated safe dissipation are very difficult to obtain. (There are, however, dummy antenna kits available that can handle up to a kilowatt.)

For receiver and minipower transmitter testing an excellent dummy antenna can be made by installing a 51- or 75-ohm composition resistor in a PL-259 fitting as shown in Fig. 17-24. Sizes from one-half to two watts are satisfactory. The disk at the end helps reduce lead inductance and completes the shielding. Dummy antennas made in this way have good characteristics through the vhf bands as well as at all lower frequencies.

Increasing Power Ratings

More power can be handled by using a number of 2-watt resistors in parallel, or series-parallel, but at the expense of introducing some reactance. Nevertheless, if some departure from the ideal impedance characteristics can be tolerated this is a practical method for getting increased dissipations. The principal problem is stray inductance which can be minimized by mounting the resistors on flat copper strips or sheets, as suggested in Fig. 17-25.

The power rating on resistors is a *continuous* rating in free air. In practice, the maximum power dissipated can be increased in proportion to the reduction in duty cycle. Thus with keying, which has a duty cycle of about 1/2, the rating can be doubled. With sideband the duty cycle is usually not over about 1/3. The best way of judging is to feel the resistors occasionally; if too hot to touch, they may be dissipating more power than they are rated for.

THE OSCILLOSCOPE

The electrostatically deflected cathode-ray tube, with appropriate associated equipment, is capable of displaying both low- and radio-frequency signals on its fluorescent screen, in a form which lends itself to ready interpretation. (In contrast, the magnetically deflected television picture tube is not at all suitable for measurement purposes.) In the usual display presentation, the fluorescent spot moves across the screen horizontally at some known rate (horizontal deflection or horizontal sweep) and simultaneously is moved vertically by the signal voltage being examined (vertical deflection). Because of the retentivity of the screen and the eye, a rapidly deflected spot appears as a continuous line. Thus a varying signal voltage causes a pattern to appear on the screen.

Conventionally, oscilloscope circuits are designed so that in vertical deflection the spot moves upward as the signal voltage becomes more positive with respect to ground, and vice versa (there are exceptions, however). Also, the horizontal deflection is such that with an ac sweep voltage – the simplest form – positive is to the right; with a linear sweep – one which moves the spot at a uniform rate across the screen and then at the end of its travel snaps it back very quickly to the starting point – *time* progresses to the right.

Most cathode-ray tubes for oscilloscope work require a deflection amplitude of about 50 volts per inch. For displaying small signals, therefore, considerable amplification is needed. Also, special circuits have to be used for linear deflection. The design of amplifiers and linear deflection circuits is complicated, and extensive texts are available. For checking modulation of transmitters, a principal amateur use of the scope, quite simple circuits suffice. A 60-Hz voltage from the power line makes a satisfactory horizontal sweep, and the voltage required for vertical deflection can easily be obtained from transmitter rf circuits without amplification.

For general measurement purposes amplifiers and linear deflection circuits are needed. The most economical and satisfactory way to obtain a scope having these features is to assemble one of the many kits available.

Simple Oscilloscope Circuit

Fig. 17-26 is an oscilloscope circuit that has all the essentials for modulation monitoring: controls for centering, focusing, and adjusting the brightness of the fluorescent spot; voltage dividers to supply proper electrode potentials to the cathode-ray tube; and means for coupling the vertical and horizontal signals to the deflection plates.

The circuit can be used with electrostatic-deflection tubes from two to five inches in face diameter, with voltages up to 2500. Either set of deflecting electrodes (D1D2, or D3D4) may be used for either horizontal or vertical deflection, depending on how the tube is mounted.

In Fig. 17-26 the centering controls are not too high above electrical ground, so they do not need special insulation. However, the focusing and intensity controls are at a high voltage above ground and therefore should be carefully insulated. Insulated couplings or extension shafts should be used.

The tube should be protected from stray magnetic fields, either by enclosing it in an iron or steel box or by using one of the special CR tube

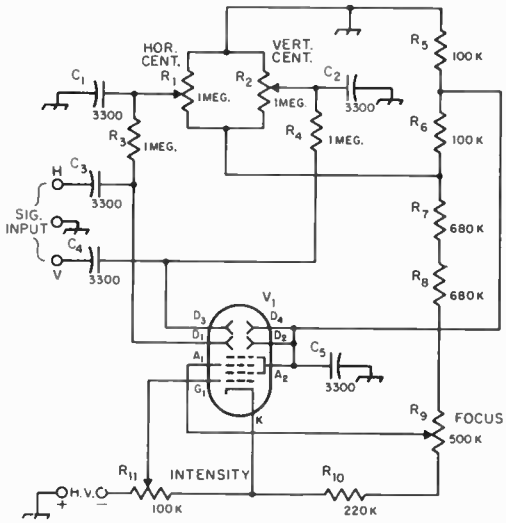

Fig. 17-26 – Oscilloscope circuit for modulation monitoring. Constants are for 1500- to 2500-volt high-voltage supply. For 1000 to 1500 volts, omit R8 and connect the bottom end of R7 to the top end of R9.
C1-C5, incl. – 1000-volt disk ceramic.
R1, R2, R9, R11 – Volume-control type, linear taper. R9 and R11 must be well insulated from chassis.
R3, R4, R5, R6, R10 – 1/2 watt.
R7, R8 – 1 watt.
V1 – Electrostatic-deflection cathode-ray tube, 2- to 5-inch. Base connections and heater ratings vary with type chosen.

shields available. If the heater transformer (or other transformer) is mounted in the same cabinet, care must be used to place it so the stray field around it does not deflect the spot. The spot cannot be focused to a fine point when influenced by a transformer field. The heater transformer must be well insulated, and one side of the heater should be connected to the cathode. The high-voltage dc can be taken from the transmitter plate supply; the current required is negligible.

Methods for connecting the oscilloscope to a transmitter for checking or monitoring modulation are given in earlier chapters.

Quasi-Linear Sweep

For wave-envelope patterns that require a fairly linear horizontal sweep, Fig. 17-27 shows a method of using the substantially linear portion of the 60-Hz sine wave – the "center" portion where the wave goes through zero and reverses polarity. A 60-Hz transformer with a center-tapped secondary winding is required. The voltage should be sufficient to deflect the spot well off the screen on both sides – 250 to 350 volts, usually. With such "over-deflection" the sweep is fairly linear, but it is as bright on retrace as on left-to-right. To blank it in one direction, it is necessary to couple the ac to the No. 1 grid of the CR tube as shown.

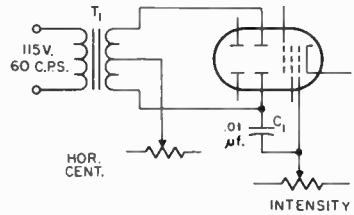

Fig. 17-27 – A quasi-linear time base for an oscilloscope can be obtained from the "center" portion of a sine wave. Coupling the ac to the grid gives intensity modulation that blanks the retrace.
C1 – Ceramic capacitor of adequate voltage rating.
T1 – 250- to 350-volt center-tapped secondary. If voltage is too high, use dropping resistor in primary side.

Lissajous Figures

When sinusoidal ac voltages are applied to both sets of deflecting plates in the oscilloscope the resultant pattern depends on the relative amplitudes, frequencies and phases of the two voltages. If the ratio between the two frequencies is constant and can be expressed in integers a stationary pattern will be produced.

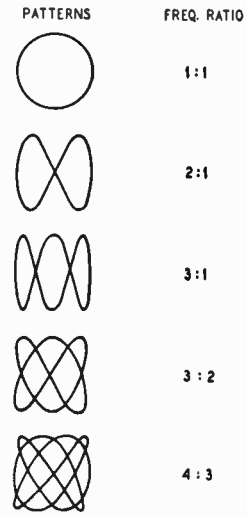

Fig. 17-28 – Lissajous figures and corresponding frequency ratios for a 90-degree phase relationship between the voltages applied to the two sets of deflecting plates.

The stationary patterns obtained in this way are called Lissajous figures. Examples of some of the simpler Lissajous figures are given in Fig. 17-28. The frequency ratio is found by counting the number of loops along two adjacent edges. Thus in the third figure from the top there are three loops along a horizontal edge and only one along the vertical, so the ratio of the vertical frequency to the horizontal frequency is 3 to 1. Similarly, in the fifth figure from the top there are four loops along the horizontal edge and three along the vertical edge, giving a ratio of 4 to 3. Assuming that the known frequency is applied to the horizontal plates, the unknown frequency is

$$f2 = \frac{n2}{n1} f1$$

where $f1$ = known frequency applied to horizontal plates,
$f2$ = unknown frequency applied to vertical plates,
$n1$ = number of loops along a vertical edge and,
$n2$ = number of loops along a horizontal edge

An important application of Lissajous figures is in the calibration of audio-frequency signal generators. For very low frequencies the 60-Hz power-line frequency is held accurately enough to be used as a standard in most localities. The medium audio-frequency range can be covered by comparison with the 440- and 600-Hz modulation on the WWV transmissions. It is possible to calibrate over a 10-to-1 range, both upwards and downwards, from each of the latter frequencies and thus cover the audio range useful for voice communication.

An oscilloscope having both horizontal and vertical amplifiers is desirable, since it is convenient to have a means for adjusting the voltages applied to the deflection plates to secure a suitable pattern size.

MARKER GENERATOR FOR 100, 50 AND 25 KHZ

The frequency generator in the accompanying illustrations will deliver marker signals of usable strength well into the vhf region when its output is connected to the antenna input terminals of a communications receiver. It uses a 100-kHz crystal in an integrated-circuit version of the solid-state multivibrator oscillator shown earlier. The oscillator is followed by a two-stage IC divider which produces 50- and 25-kHz marker intervals. Two inexpensive ICs are used, an MC-724P quad gate and an MC790P dual JK flip-flop. Two of the gates in the MC724P are used for the oscillator and a third serves as a following buffer amplifier and "squarer" for driving the first divide-by-2 circuit in the MC790P. This divider then drives the second divide-by-2 flip-flop. Outputs at the three frequencies are taken through a 3-position switch from taps as shown in the circuit diagram, Fig. 17-30.

Two of the three poles of the 4-position switch are used for controlling the collector voltage for the ICs. Voltage is on the MC724P in all active positions of the switch, but is applied to the MC790P only when 50- and 25-kHz markers are required. This saves battery power, since the MC790P takes considerably more current than the MC724P.

The outputs on all three frequencies are good square waves. To assure reasonably constant harmonic strength through the hf spectrum the output is coupled to the receiver through a small capacitance which tends to attenuate the lower-frequency harmonics. This capacitance, C3, is not critical as to value and may be varied to suit individual preferences. The value shown, 22 pF, is satisfactory for working into a receiver having an input impedance of 50 ohms.

At 3 volts dc input the current taken in the 100-kHz position of S1 is 8 mA. In the 50- and 25-kHz positions the total current (both ICs) is 35 mA. The generator continues to work satisfactorily when the voltage drops as low as 1.5 volts. The oscillator frequency is subject to change as the voltage is lowered, the frequency shift amounting to approximately 30 Hz at 15 MHz on going from 3 to 2 volts. There is a slight frequency shift between the 100-kHz and 50/25-kHz positions, but this amounts to only 6 or 7 Hz at 15 MHz.

Fig. 17-29 — Frequency marker generating 100-, 50-, or 25-kHz intervals. Battery power supply (two "D" cells) is inside the cabinet, a 3 X 4 X 6-inch aluminum chassis with bottom plate. The trimmer capacitor for fine adjustment of frequency is available through the hole in the top near the left front.

Frequency changes resulting from temperature variations are larger; they may be as much as a few hundred Hz at 15 MHz in normal room-temperature variations. All such frequency changes can be compensated for by adjusting C2, and it is good practice to check the frequency occasionally against one of the WWV transmissions, readjusting C2 if necessary.

Layout and Construction

The physical layout of the circuit can be varied to suit the builder's tastes. The size of the box containing the generator shown in the photographs makes the batteries easily accessible for replacement. The method of mounting the crystal and C2 allows the latter to be reached through the top of the box for screwdriver adjustment, and makes possible the easy removal of the crystal since it plugs into a standard crystal socket. There is ample room for soldering the various wires that lead to the switch from the etched board on which the ICs, resistors, and C1 are mounted. The output

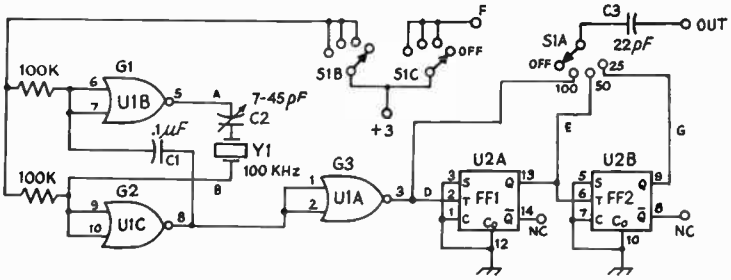

C1 — 0.1μF paper, low voltage.
C2 — 7-45-pF ceramic trimmer.
C3 — 22-pF dipped mica (ceramic also satisfactory).
S1 — 3-pole, 4-position rotary (Mallory 3134J).
U1 — Quad 2-input NOR gate, 1 section unused (Motorola MC724P).
U2 — Dual J-K flip-flop (Motorola MC790P).

Fig. 17-30 — Marker generator circuit. Pin 4 of both ICs is grounded. Connect pin 11 of U1 to point C, and pin 11 of U2 to point F.

jack is placed at the rear where it is convenient when the unit is alongside a receiver.

An etched board does not have to be used for wiring the ICs and associated parts, although it makes for neatness in construction. The wiring plan used in this one is shown in Fig. 17-32. Fig. 17-32 is not a conventional template, but is a scale drawing showing how the etched connections can run with a minimum number of cross-over points where jumpers are required (only one is needed in this layout). In following the wiring plan the resist can be put on as desired, so long as the separation between conductors is great enough to prevent short-circuits.

Fig. 17-32 shows the front or component side of the board. To get the reversed drawing that would be followed on the copper side, place a piece of paper under the figure, with a face-up piece of carbon paper under it. Then trace the wiring with a sharp pencil and the layout will be transferred to the back of the paper. The points where holes are to be drilled are shown by small dots and circles, the latter indicating the points at which external connections are to be made.

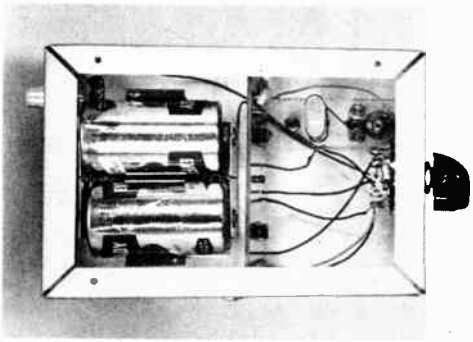

Fig. 17-31 — Integrated circuits and associated fixed capacitors and resistors are mounted on an etched broad measuring 3 3/4 X 2 1/2 inches, supported from one wall by an aluminum bracket. The 100-kHz crystal and trimmer capacitor are on a 1 X 2-inch plastic strip supported below the top on 1/2-inch spacers, with the capacitor facing upward so it can be adjusted from outside. The two dry cells are in a dual holder (available from electronics supply stores). The output connector is a phono jack, mounted on the rear wall (upper left in this view) with C3.

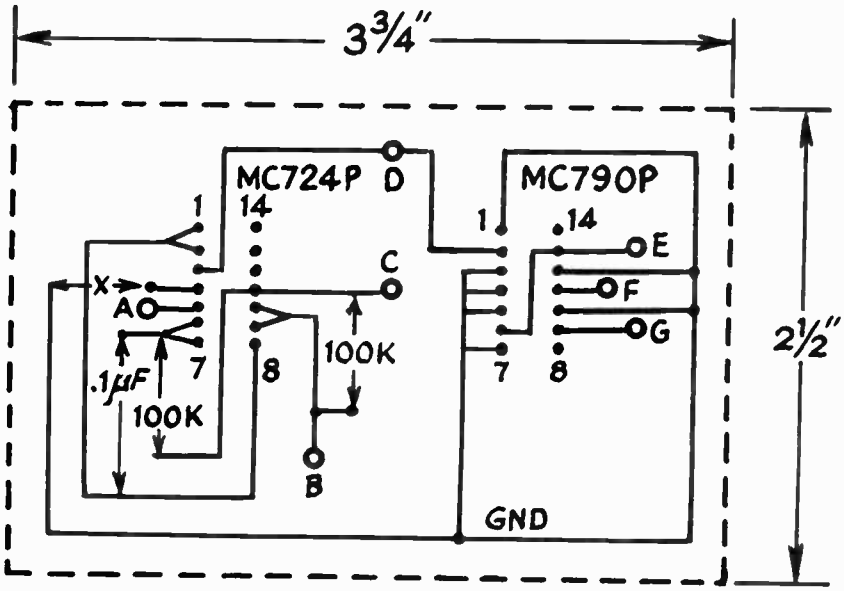

Fig. 17-32 — Wiring plan for the circuit board, component side. Dimensions for placement of parts are exact. X — jumper. Other letters indicate external connection points, corresponding to similarly lettered connections in Fig. 17-30.

TWO-TONE AUDIO TEST GENERATOR

The audio generator shown in the accompanying illustrations generates two audio frequencies which either can be combined to produce a two-tone signal for ssb transmitter testing or used independently for any test requiring a single audio-frequency voltage. Construction is easy and procurement of parts is simple because the generator makes use of RCA integrated-circuit kits. Only a few easy-to-get additional components are required.

A pair of RCA KC-4002 audio-oscillator modules are used as the tone generators. The output of these oscillators should be as free from harmonics as possible, and the tone frequencies used should not be harmonically related. A mixer combines the output of the two oscillators, and this mixing process must also be distortion free. One major objective of two-tone testing is to check the amount of distortion produced in the transmitter, so you need a clean signal from the generator to start with. Otherwise, harmonics from the generator will be indistinguishable from those produced in the transmitter. The circuit is shown in Fig. 17-34; parts not supplied with the kits are marked with an asterisk.

The capacitors supplied with the KC-4002 provide an output frequency of 2000 Hz. One oscillator is used on this frequency, and the other shifted down to 800 Hz by changing C1, C2 and C3. The capacitor values required are not standard so two capacitors are used in parallel in each case.

Fig. 17-33 — The two-tone audio test generator. Subminiature controls and switches are used on the front panel. The box is homemade; it consists of two U-shaped pieces of sheet aluminum, one forming the chassis, the other the cover. Overall size is 7 1/2 X 4 1/4 X 1 1/4 inches. For appearance's sake, the top cover overhangs the front panel by 1/4 inch. The controls adjust the output level and balance the relative tone levels.

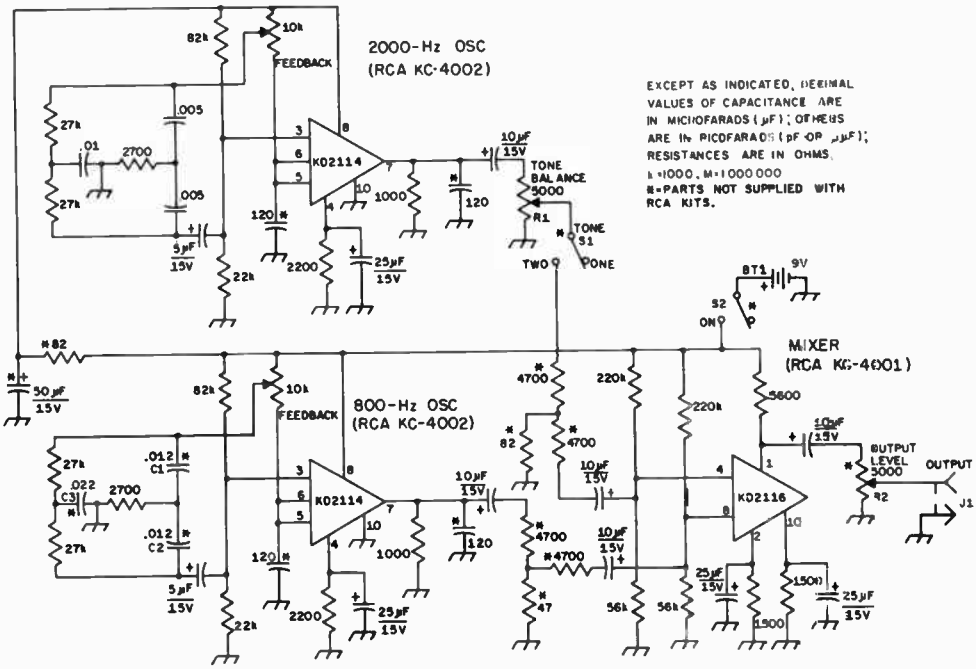

Fig. 17-34 — Circuit diagram of the integrated-circuit two-tone test generator (IC-TT). Resistors are 1/2-watt composition; capacitors with polarity marked are electrolytic, others are disk ceramic. All parts are supplied with the RCA kits, except those marked with an asterisk.

BT1 — 9-volt transistor-radio type.

C1, C2 — .01- and .002-μF disk ceramic (in parallel).

C3 — .02- and .002-μF disk ceramic (in parallel).

J1 — Phono type.

R1, R2 — Miniature control (Mallory MLC53L).

S1, S2 — Spdt miniature toggle (Radio Shack 275-376).

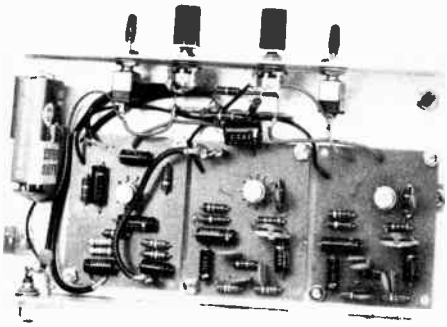

Fig. 17-35 — Interior view of the IC-TT. Interconnections carrying audio signals use subminiature coax to prevent hum pickup. A homemade clip holds the battery in place. Feedback adjustment of each oscillator is made with the controls on the KC-4002 boards.

While testing this system, both oscillators produced very healthy outputs on about 5 MHz in addition to the desired audio tones. A 120-pF capacitor across the input killed this oscillation, but then a weaker output at 50 MHz appeared. Another 120-pF capacitor was added, this time across the output terminals, and stable operation resulted. Both capacitors must have their leads cut very short to be effective. With these modifications, the ICs operate satisfactorily.

The mixer, a KC-2001 kit, showed no signs of rf oscillations. The output of the KC-4002s is far in excess of what the mixer can handle, so an attenuator was added on the output of each oscillator to reduce the level to a suitable value. Control R1 allows the output level of one oscillator to be matched to the other (both tones must be of equal amplitude to produce the desired oscillosope patterns). The mixer is an additive device, the output with two equal tones being twice that of either tone alone. Thus, checking the output of the generator with two- and one-tone output, alternately, for a 2 to 1 voltage relationship, is one way of determining that the BALANCE control is set correctly.

Alignment

The upper picture of Fig. 17-36 shows the proper scope pattern for single-tone output. The feedback adjustment in each oscillator is critical; too little feedback and the oscillator quits, too much feedback and the harmonic content of the outputs goes up. The best setting for the FEEDBACK control is at a point where oscillation just starts. Also, the oscillator modules are voltage-sensitive. If the battery voltages goes down during extended use, the oscillators may stop working, and the feedback must be increased to get them going again. A little experimentation will show the best point at which to set the FEEDBACK control. The oscillators should be set up and checked separately, and then connected to the mixer module.

The final alignment of the generator is as follows: Switch to two-tone output (S1 closed) and adjust the FEEDBACK control on the 2000-Hz oscillator until oscillation ceases. At this point you should have output from the 800-Hz oscillator alone. With the BALANCE control set at midrange, connect an oscilloscope to the output of the generator and note the height of the output pattern. S1 should then be set for single-tone output, and the FEEDBACK control reset so that the 2000-Hz oscillator starts. The FEEDBACK control should be adjusted so that the pattern height produced on the scope is close to that of the 800-Hz oscillator. Minor differences can be corrected with the BALANCE control.

Switching to two-tone output, you should get a pattern similar to the lower picture in Fig. 17-36. The two-tone pattern will be difficult to sync on an average oscilloscope because of the different frequency components in the signal. The pattern height of the two-tone output on the scope should be double that obtained with a single tone, as stated earlier.

Methods of using a two-tone generator in ssb transmitter testing are described in the chapter on single sideband principles and applications. (From May 1970 *QST*.)

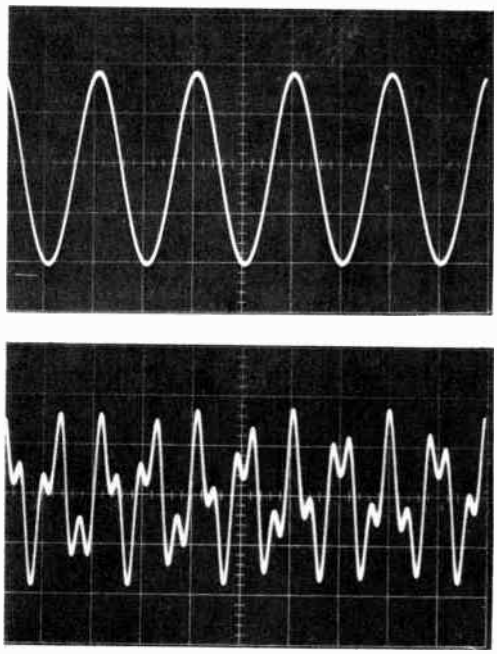

Fig. 17-36 — Proper output waveforms from the generator: (Upper) sine wave, indicating correct adjustment of the FEEDBACK control; (Lower) two-tone output.

DIP METERS FOR THE HF-VHF-UHF RANGE

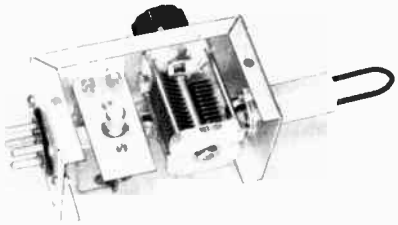

Fig. 17-37 — Dip meter covering the range 1.7 to 275 MHz, with the 90- to 165-MHz coil in place.

Figs. 17-37 through 17-41 show representative construction of vacuum-tube dip meters for the frequencies of interest to amateurs. Two separate designs are required to cover the lower frequencies along with the vhf-uhf range. The same power supply/meter unit serves for both. The 6CW4 Nuvistor triode is used in both meters.

Referring to the circuit in Fig. 17-38, a resistor, R2, is plugged in with each coil (the resistor is mounted in the coil form). It forms a voltage divider with the normal grid leak, R1, and brings the metering circuit into the best range for the transistor dc amplifier.

A small aluminum bracket supports the Nuvistor socket within the 2 1/4 X 2 1/4 X 4-inch Minibox that is used as a housing. A 5-pin socket (Amphenol 78-S5S) is mounted at one end of the Minibox, and the variable capacitor stator leads are soldered directly to two of the pins. Coils in the low-frequency ranges are wound with enameled wire on 3/4-inch diameter forms. In the intermediate ranges coil stock (B&W Miniductor) is mounted inside the coil forms, with one end of the coil close to the open end of the form, for ease in coupling. The two highest-range coils are hairpin loops of No. 14 wire, covered with insulation as a safety precaution. In every case the associated R2 is mounted in the coil form. The highest range requires that only the base of the coil form be used, since the loop is shorter than the form.

The power supply may be included with the oscillator, but since this increases the bulk and weight a separate supply is often desirable. The power supply shown in Fig. 17-40 uses a miniature power transformer with a silicon rectifier and a simple filter to give approximately 120 volts for the oscillator plate. It is also built in a 2 1/4 X 2 1/4 X 4-inch Minibox. The two Miniboxes are connected by a length of 4-conductor cable.

Either meter may be used as an indicating-type absorption wavemeter by removing the plate voltage and using the grid and cathode of the tube as a diode.

UHF Grid-Dip Oscillator

The range of the grid-dip meter shown in Fig. 17-39 is from 275 to 725 MHz, a higher range than most of the inexpensive meters now available. It is able to cover these high frequencies by virtue of the 6CW4 tube and the series-tuned circuit.

The uhf grid-dip meter is built in a 2 1/4 X 2 1/4 X 4-inch Minibox. The "heart" of the meter is the oscillator section, which is built on a 1 3/4 X 1 7/8-inch piece of 1/8-inch thick polystyrene. The Nuvistor socket is mounted in one corner and the tuning capacitor is mounted a little above center. The coil socket, a National CS-6, is mounted on the end of the Minibox. The polystyrene sheet is supported by four 1-inch 6-32 screws, and the sockets and variable capacitor are positioned so that direct connections can be made between plate pin and coil socket, capacitor rotor and coil socket, and capacitor stator and grid pin. The various resistors and rf chokes are supported at one end by a multiple-terminal tie strip mounted on the polystyrene sheet and at the other end by the socket pins and other terminals.

The coils are made from No. 10 tinned copper wire; as a safety precaution they are covered except at the tips by clear plastic insulation. Details are given in Fig. 17-41.

Frequency calibration of the meter can be started by reference to uhf TV stations in the area, if any, or by reference to 420-MHz amateur gear.

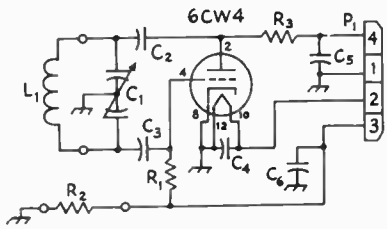

Fig. 17-38 — Circuit diagram of the hf-vhf dip meter.
C1 — 50 pF per section (Johnson 167-11 with stator bars sawed between 6th and 7th plates).
C2, C3 — 100-pF ceramic.
C4, C5, C6 — .001-μF disk ceramic.
P1 — 4-pin chassis plug (Amphenol 86-CP4).
R1 — 47,000 ohms, 1/2 watt.
R2 — See table below.
R3 — 10,000 ohms.

Range	*L1*	*R2*
1.7-3.2 MHz	195 turns No. 34 enam.*	680
2.7-5.0	110 turns No. 30 enam.*	470
4.4-7.8	51 1/2 turns No. 30 enam.*	470
7.5-13.2	24 1/2 turns No. 30 enam.*	470
12-22	31 t. No. 24 (B&W 3004)**	1000
20-36	14 t. No. 24 (B&W 3004)**	680
33-60	8 1/2 t. No. 20 (B&W 3003)***	680
54-99	3 3/4 t. No. 20 (B&W 3003)***	1000
90-165	3 3/8-inch loop No. 14 1/2-inch separation	1500
150-275	1 1/4-inch loop No. 14, 1/4-inch separation	3300

* Wound on 3/4-inch diameter polystyrene form.
**32 tpi ***16 tpi

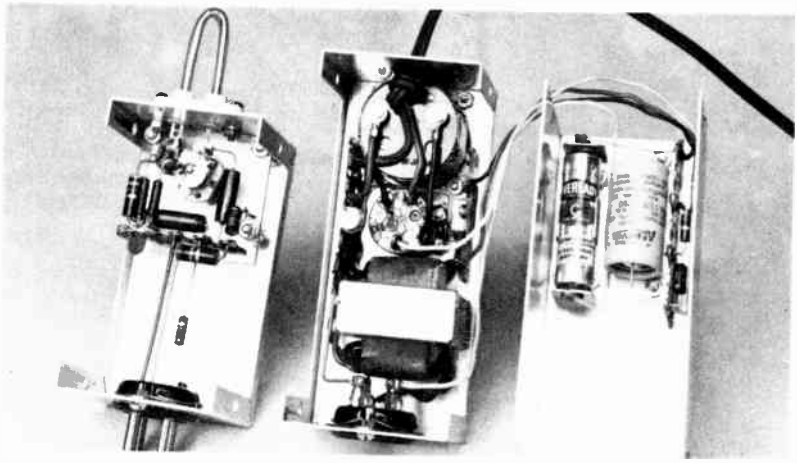

Fig. 17-39 — Dip meter for the 300- to 700-MHz range. The oscillator section is at the left in its own case, and the power supply plus transistorized indicator is at the center and right. In the oscillator section, the 6CW4 (Nuvistor) socket is to the left of the tuning capacitor.

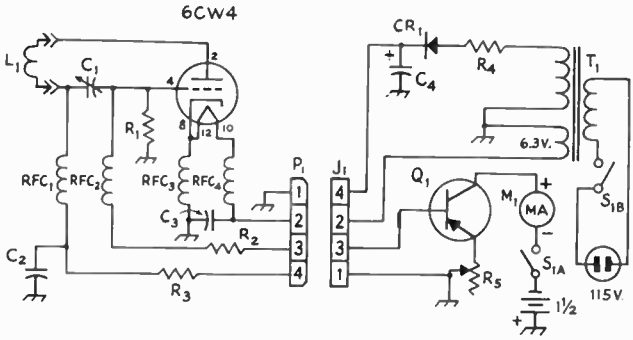

Fig. 17-40 — Circuit diagram of the uhf dip meter.

C1 — 8-pF midget variable (Hammarlund MAC-10 with one rotor plate removed).
C2 — 150-pF ceramic.
C3 — .001-μF ceramic.
C4 — 400 PRV rectifier (Sarkes Tarzian 2F4).
J1 — 4-pin tube socket.
M1 — 0-500 microammeter.
P1 — 4-pin plug (Amphenol 86-CP4).
Q1 — Motorola HEP253 transistor.
R1 — 330 ohms, 1 watt.
R2 — 47,000 ohms, 1/2 watt.
R3 — 10,000 ohms.
R4 — 22 ohms, 1/2 watt.
R5 — 10,000-ohm potentiometer.
RFC1, RFC2 — 22-μH rf choke (Millen 34300-22).
RFC3, RFC4 — 0.82-μH rf choke (Millen 34300-.82).
S1A, S1B — Dpst, part of R5. Switches should be open when R5 is at maximum resistance.
T1 — 6.3- and 125-V transformer (Knight 61 G 410).

Range	*Dimension "L"*	*"M"*
271-324 MHz	2 3/4	11/16
312-378	3 1/8	—
372-463	2	—
413-519	1 5/8	—
446-565	1 1/4	—
544-730	1/2*	—

* Shape closed end to be nearly square.

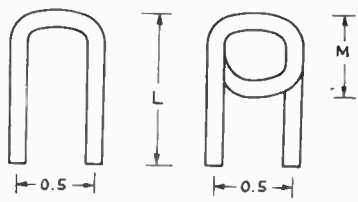

Fig. 17-41 — Details of the coils used in the uhf grid-dip meter. The material is No. 10 tinned-copper wire. One turn in end of low-frequency coil.

ABSORPTION FREQUENCY METER FOR 1.6-300 MHZ

The absorption frequency meter in the accompanying illustrations uses six plug-in coils (L1 in Fig. 17-43) to cover the frequency range 1.6-300 MHz. The indicator is a miniature 0-1 milliammeter. L1 is tapped appropriately for delivering maximum power to the meter, and the rf output is rectified by CR1, followed by an rf filter consisting of C2, C3 and RFC1. The circuit is built in a 2 1/8 X 3 X 5 1/4-inch Minibox, with C1 mounted so that the rotor tab and stator support bar can be soldered directly to the coil-socket terminals. The meter, M1, is mounted at the end opposite C1.

The coils are wound on Millen type 45004 four-prong coil forms. Taps are made by doubling the wire back on itself at the appropriate point, feeding the double portion through the hole in the side of the form, twisting, and inserting the twisted pair into the coil-form pin. Clean off the enamel where the tap goes into the pin so a good soldered connection can be made. The finished coils can be given several coats of clear spray lacquer for protection. Construction of the 95-300 MHz coil will be easier if 3/4 inch of the form is sawed off first.

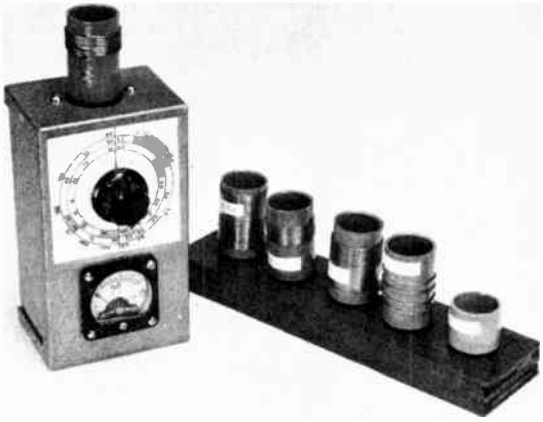

Fig. 17-42 — Absorption frequency meter for 1.6-300 MHz.

FIELD-STRENGTH MEASUREMENTS

The radiation intensity from an antenna is measured with a device that is essentially a very simple receiver equipped with an indicator to give a visual representation of the comparative signal strength. Such a field-strength meter is used with a "pickup antenna," which should always have the same polarization as the antenna being checked — e.g., the pick-up antenna should be horizontal if the transmitting antenna is. Care should be taken to prevent stray pickup by the field-strength meter or by any transmission line that may connect it to the pickup antenna.

Field-strength measurements preferably should be made at a distance of several wavelengths from the transmitting antenna being tested. Measurements made within a wavelength of the antenna may be misleading, because of the possibility that the measuring equipment may be responding to the combined induction and radiation fields of the antenna, rather than to the radiation field alone. Also, if the pickup antenna has dimensions comparable with those of the antenna under test it is likely that with closer spacing the coupling between the two antennas will be great enough to cause the pickup antenna to tend to become part of the radiating system and thus result in misleading field-strength readings.

A desirable form of pickup antenna is a dipole installed at the same height as the antenna being

Coil Range	*A (inches)*	*B (inches)*	*Wire size*[1]	*Turns*	*Tap*[2]
1.6–4 MHz	3/8	7/8	No. 30	125	32 turns
3.2–7.4 MHz	1/8	1/4	No. 30	35	11
6–14 MHz	3/8	3/4	No. 20	27	8
12–29 MHz	1/8	1/4	No. 20	10	3
30–90 MHz	4 turns of No. 20, turns spaced to cover 1 inch; tap is 1 1/2 turns from ground end.				
95–300 MHz	Hairpin of No. 14 tinned wire, 1/2-inch spacing, 2 inches long including coil pins, tapped 1 1/2 inch from ground.				

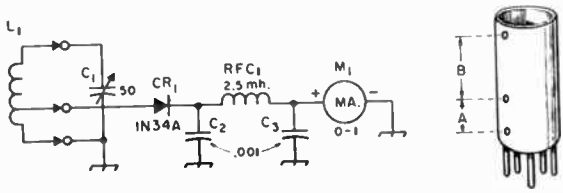

Fig. 17-43 — Circuit diagram of the frequency meter.
C1 — 50-pF variable (Millen 20050).
C2, C3 — .001-μF disk ceramic.
CR1 — 1N34A germanium diode.
M1 — 0-1 milliammeter.
L1 — See coil table.
RFC1 — 2.5-mH rf choke (Millen 34000-2500).

tested, with low-impedance balanced line connected at the center to transfer the rf signal to the field-strength meter. The length of the dipole need only be great enough to give adequate meter readings.

Field-Strength Meters

The absorption frequency meter just described may be used as a field-strength meter in conjunction with a pickup antenna. Coupling between the frequency-meter coil and the transmission line to the antenna may be a turn or two of wire wrapped around the coil at the ground end, with the ends of the wire loop connected to the ends of the line. The pickup antenna, installed in its selected position, should be adjusted in length for a suitable indication (about half scale) on the meter at the beginning of the tests. The meter of course should be tuned to the frequency being used.

The simple rectifier/milliammeter combination used in this frequency meter is not linear, so the indications tend to give an exaggerated picture of the results of changes in the antenna system under test. The readings can be made practically linear, and the sensitivity increased, by using the transistor dc amplifier circuit shown in Fig. 17-46. The 47,000-ohm resistor, R1, is substituted for M1 in Fig. 17-43. The FET amplifier with dc feedback through R2 is quite linear with respect to gate voltage. A bridge circuit, consisting of the drain-source resistance (with R2 in series), R3, R4 and R5, balances out the steady drain current, so that only the *change* in current is indicated by the 0-1 milliammeter. The meter current is balanced to zero with no signal input by means of R2.

The linear range of this amplifier is from 0.1 to 1 mA, representing a ratio of about 6.5 to 1 in applied voltage. This corresponds to a power ratio of about 40, or 16 dB.

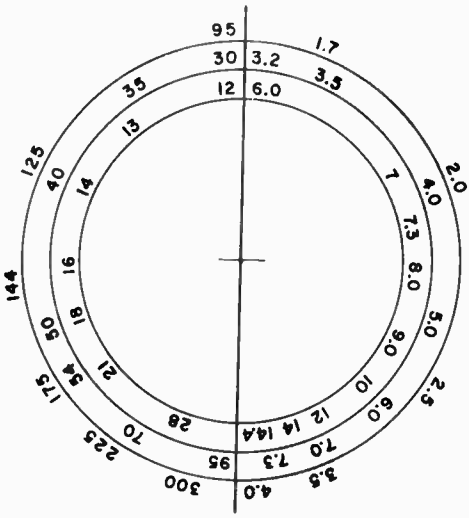

Fig. 17-45 — This dial chart may be copied full size and used as shown in Fig. 17-42 provided the tuned-circuit parts are exactly as specified in Fig. 17-43 and the construction duplicates Fig. 17-44.

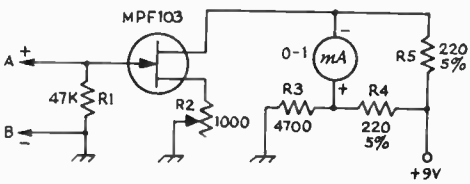

Fig. 17-46 — FET amplifier for absorption frequency meter. A and B replace the meter connections in Fig. 17-43. A 9-volt transistor radio battery may be used for drain voltage, as the total current is only 4-6 mA on the average.

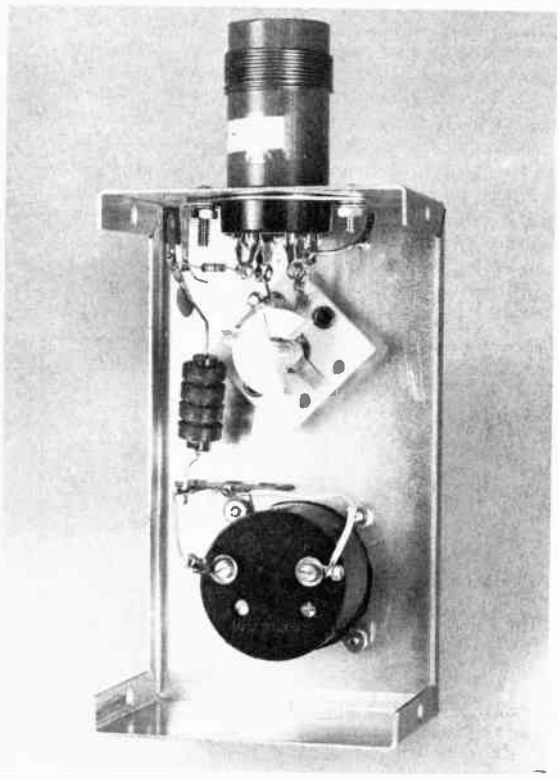

Fig. 17-44 — Inside the absorption frequency meter, showing placement of tuning capacitor and coil socket.

AN IN-LINE RF WATTMETER

The rf power meter shown in Figs. 17-47 to 17-50, inclusive, uses the reflectometer circuit described earlier (Fig. 17-16C). With suitable calibration, it has good accuracy over the 3-30-MHz range and is useful for transmitter testing, monitoring, and for adjusting antennas and Transmatches. It is built in two parts, an rf head for inserting in the coaxial line leaving the transmitter, and a control/meter box which can be placed in any location where it can be operated conveniently. Only direct current flows in the cable connecting two pieces.

Fig. 17-47 — Outside view of the power meter. The rf head is built in a 4 X 4 X 2-inch utility box. A sloping-panel cabinet houses the controls and meter. A four-wire shielded cable joins the two pieces.

Construction

For proper balance and operation the layout of the bridge should be as symmetrical as possible. An etched-circuit board is used for the rf head of this instrument. It assures good symmetry, and fits into a 4 X 4 X 2-inch utility box.[1] All of the rf-head components except J1, J2 and the feedthrough capacitors are assembled on the board. It is held in place by means of a homemade aluminum L bracket at the end nearest T1. The circuit-board end nearest the feedthrough capacitors is secured with a single No. 6 spade bolt. Its hex nut is outside the box, and is used to secure a solder lug which serves as a connection point for the ground braid in the cable which joins the control box to the rf head.

T1 fits into a cutout area of the circuit board. A 1-inch long piece of RG-8/U coax is stripped of its vinyl jacket and shield braid, and is snug-fit into

[1] Scale circuit-board templates for this instrument are available from ARRL Hq. for 25 cents and an s.a.s.e.

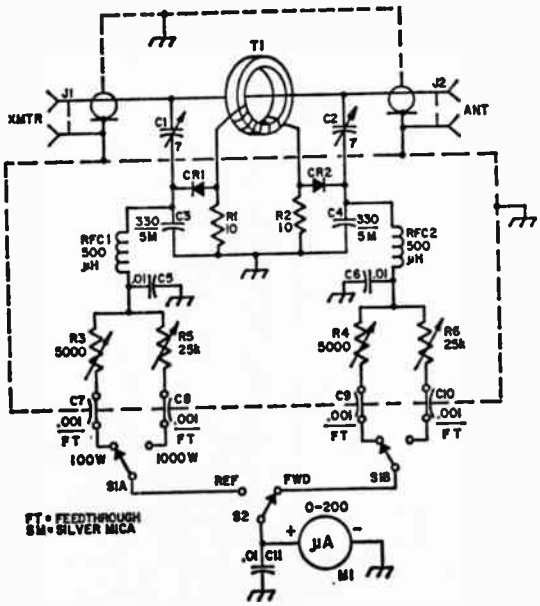

WATTS	M1	WATTS
100	200	1000
90	180	900
80	170	800
70	155	700
60	145	600
50	125	500
40	105	400
30	85	300
20	65	200
10	40	100
5	20	50

Fig. 17-48 — Schematic diagram of the wattmeter. A calibration chart for M1 is shown. Fixed resistors are 1/2-watt composition. Fixed capacitors are disk ceramic unless otherwise noted. Decimal-value capacitances are in µF. Others are in pF. Resistance is in ohms; k = 1000.

C1, C2 — 1.3 to 6.7-pF miniature trimmer (E. F. Johnson 189-502-4. Available from Newark Electronics, Chicago, IL.).
C3-C11, incl. — Numbered for circuit-board identification.
CR1, CR2 — Small-signal germanium diode. 1N34A, etc. (matched pair recommended).
J1, J2 — Chassis-mount coax connector of builder's choice. Type SO-239 used here.
M1 — 0 to 200-µA meter (Triplett type 330-M used here).
R1, R2 — Matched 10-ohm resistors.
R3, R4 — 5000-ohm printed-circuit carbon control (IRC R502-B).
R5, R6 — 25,000-ohm printed-circuit carbon control (IRC R253-B).
RFC1, RFC2 — 500-µH rf choke (Millen 34300-500 or similar).
S1 — Dpdt single-section phenolic wafer switch (Mallory 3222J).
S2 — Spdt phenolic wafer switch (Centralab 1460).
T1 — Toroidal transformer; 35 turns of No. 26 enam. wire to cover entire area of Amidon T-68-2 toroid core (Amidon Assoc., 12033 Otsego St., N. Hollywood, CA 91607).

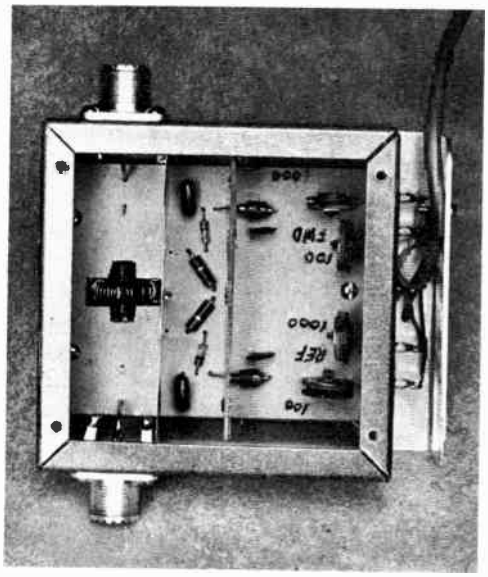

Fig. 17-49 — Top view of the rf head. A flashing-copper shield isolates the through-line and T1 from the rest of the circuit. The second shield (thicker) is not required and can be eliminated. If a 2000-watt scale is desired, fixed-value resistors of approximately 22,000 ohms can be connected in series with the high-range controls, R5 and R6, or the 25,000-ohm controls can be replaced by 50,000-ohm units.

the center hole of T1. The inner conductor is soldered to the circuit board to complete the line-wire connection between J1 and J2.

The upper dashed lines shown in Fig. 17-48 indicate a shield partition. It can be made from flashing copper or thin brass. The shield divides T1, its line-wire, and J1 and J2 from the remainder of the circuit. The better the shielding job at this end of the box, the better will be the performance of the bridge. The sensing circuits must be well isolated from the diodes and other components to assure good balance and accuracy. Poor shielding will prevent a zero reading in the reflected position, even when the reflected voltage actually is zero. Poor shielding will also rule out a perfect null when balancing the bridge initially.

The control box, a sloping-panel utility cabinet, measuring 4 X 5 inches, houses the remainder of the components.

Adjustment

The power meter can be calibrated by means of an rf ammeter and a 50-ohm dummy load ($P = I^2R$), or a calibrated rf wattmeter, if available, can be used as a standard. The calibration chart of Fig. 17-48 is representative, but the actual calibration of a particular instrument will depend upon the diodes used at CR1 and CR2. Frequently, individual scales are required for the two ranges.

Set S2 at FORWARD and S1 to the 100-watt position. Connect a 50-ohm resistive load to J1 (or a 75-ohm load if the bridge will be used in 75-ohm lines). Place an rf ammeter or calibrated power meter in the line between the transmitter and J1. Set the transmitter output at 100 watts and adjust R4 for a full-scale reading on M1. Next, switch to REFLECTED, place a shorting wire across R3, and adjust C1 for a null reading on the meter. Reverse the cables at J1 and J2, remove the short from R3, apply power, and set R3 for a full-scale reading on M1. Switch S2 to FORWARD, place a shorting wire across R4, and adjust C1 for a null reading. Remove the shorting wire from R4. If good shielding is used, the meter should fall to zero when nulled, or nearly so. Reversing the bridge should provide full-scale readings in both directions with 100 watts from the transmitter. If not, diodes CR1 and CR2 may not be matched closely enough. Similarly, R1 and R2 may not be closely matched in resistance.

Calibration of the 1000-watt scale, if that much power output is available, is done by the same procedure. C1 and C2 should not require additional adjustment. R5 and R6 are used for calibrating the 1000-watt scale.

It should be remembered that when the bridge is used in a feed line that has not been properly matched to the antenna, a reflected-power reading will result. The reflected power must be subtracted from the forward power to obtain the actual power output. (From December 1969 *QST*.)

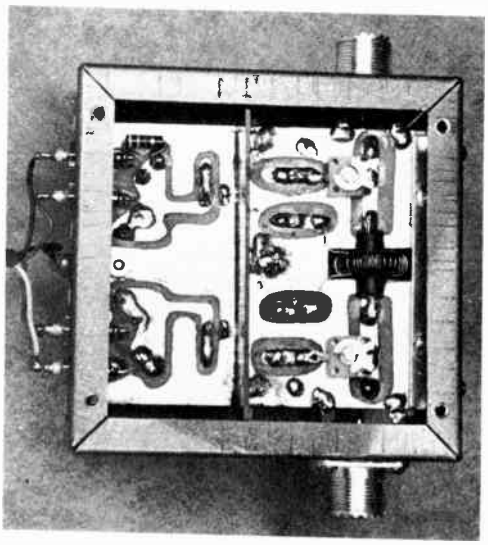

Fig. 17-50 — Bottom view of the rf head. The fixed-value resistor at the upper left is not shown in Fig. 17-48. (It is a shunt for one of the calibrating controls which was too high in value — a 50,000-ohm unit that was on hand.) The shield partition shown here (center) proved unnecessary and can be eliminated.

MATCHING INDICATOR FOR LOW POWER

Reflectometers that are useful for general amateur work are generally not sensitive enough to make satisfactory matching or SWR indicators for "flea-power" transmitters whose power output may be of the order of milliwatts rather than watts. The "Millimatch" shown in Figs. 17-51 to 17-54, inclusive, provides ample sensitivity even for power levels as low as 10 milliwatts. The basis of the circuit, Fig. 17-52, is the Monimatch-type bridge described in *QST* some years ago. With the bridge construction shown the accuracy of the nulls is maintained through the 144-MHz band. The increased sensitivity is the result of using a transistor dc amplifier between the rectifier-voltmeter circuit and the indicating meter. Current gains of 50 to 100 or more can readily be obtained with such an amplifier.

Referring to Fig. 17-52, when the J1 end of the Millimatch is connected to the transmitter and the J2 end to the antenna, rf current flowing along the conductor between the coaxial fittings induces a voltage in L1 proportional to the forward line voltage, and the voltage induced in L2 is proportional to the reflected line voltage. The L1 voltage is rectified by CR1, and when S1 is in the FWD position the rectified dc flows to the base of Q1. Q1 amplifies this dc, which is then read by M1. When S1 is switched to read reflected voltage, the voltage in L2 is rectified by CR2 and fed to the amplifier.

With S1 in the FWD position the meter reading gives a qualitative indication of relative rf output, for a fixed setting of the sensitivity control, R6, provided the load impedance remains constant when comparisons are made. (Changing either the load or the setting of R6 will change the current.) Thus the Millimatch is an aid in tuning very-low-power transmitters for maximum output.

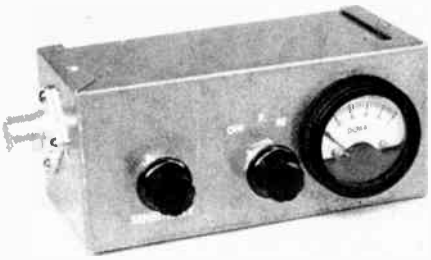

Fig. 17-51 — The completed Millimatch. At the left is the sensitivity control, R6. S1 is in the center, and M1 at the right.

Construction

The Millimatch is enclosed in a 2 1/4 X 2 1/4 X 5-inch Minibox. The transmission-line section consists of an inner conductor (a piece of 1/4-inch OD copper tubing, 4 5/8 inches long) and two pieces of flashing copper for the outer conductor. These two pieces measure 1 inch wide and 4 7/8 inches long, plus a 1/4-inch lip at each end for mounting under the screws that secure J1 and J2. Separation between the copper strips and inner conductor is maintained by two insulated spacers, Fig. 17-53. These spacers also serve to locate the pickup wires L1 and L2 at the correct distance from the inner conductor. Any available insulating material of reasonably low loss, such as bakelite or polystyrene, can be used for the spacers.

Mounted on the front of the Minibox are M1, S1, and R6. Any of the minature panel meters available from radio distributors can be used for

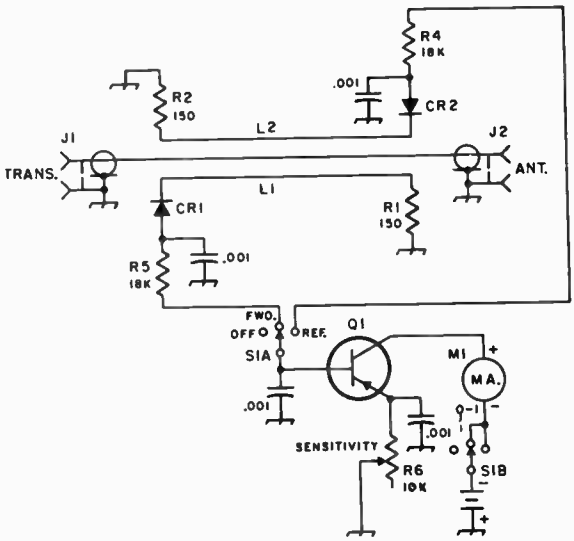

Fig. 17-52 — Circuit diagram of the Millimatch. Resistances are in ohms (k = 1000). .001-μF capacitors are disk ceramic.
CR1, CR2 — 1N34A germanium diode.
J1, J2 — Coax chassis receptacle, SO-239.
L1, L2 — See text.
M1 — 0-1 milliammeter. A more sensitive type can be used, but is not required.
Q1 — Germanium pnp (2N591, 2N705, or similar).
R1, R2 — 150 ohms, 1/2 watt carbon or composition for 50-ohm bridge, 100 ohms for 75-ohm unit.
R4, R5 — 18,000 ohms, 1/2 watt.
R6 — 25,000-ohm control, miniature type.
S1 — 2-pole, 3 position switch (Mallory 3223J or similar.)

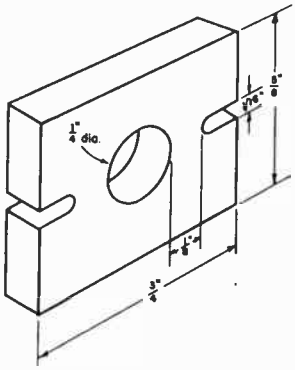

Fig. 17-53 — Dimensions of the insulating spacers used to hold bridge wires and outer conductor strips in place.

M1 as long as it doesn't protrude more than 1 1/4 inches behind the panel.

Mount J1 and J2 as close to the rear of the Minibox as possible, as shown in the photographs. Slide the spacers over the copper tubing and then tin the inside ends of the tubing with solder. Also tin the inner-conductor terminals of J1 and J2. Slide the ends of the tubing over the conductor terminals and solder. You can then mount the copper strips in place.

The pickup wires, L1 and L2, are 3 3/8-inch lengths of No. 14 tinned wire. The wires are centered in the spacers as shown in the photograph and cemented in place with china cement. R1 and R2 are 1/2-watt resistors and must be carbon or composition, *not wire wound.* For a 50-ohm bridge use 150-ohm resistors and for a 75-ohm unit, use 100-ohm resistors. The end leads of the resistors that are soldered to L1 and L2 are 1/8 inch long. Tin the ends of the pickup wires and the resistor leads with solder and solder the resistors in place. Don't overheat the resistor as too much heat can change the value. The remaining resistor leads are soldered to lugs mounted under screws that hold J1 and J2, keeping the leads as short as possible.

When connecting CR1 and CR2 to the pickup wires, use a heat sink on the lead being soldered. Too much heat can easily ruin the diode.

Although a socket was used for mounting Q1, the transistor can be mounted by its own leads if desired. The battery was installed by soldering wires to both ends, no holder being used.

Almost any germanium pnp transistor will work for Q1. Several different types were tried and all had more than adequate gain.

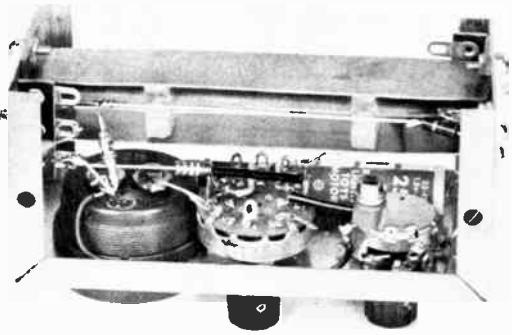

Fig. 17-54 — Inside the Millimatch. Pickup line L1 is mounted in the grooves on the insulated spacers. CR1 is at the left. At the right, just in front of the sensitivity control, is Q1 in its socket.

Testing and Using The Millimatch

Connect the Millimatch to your transmitter, using 50- or 75-ohm coax as required. Leave the antenna end of the bridge unconnected. Turn on the transmitter, switch S1 to FWD and set the sensitivity for about a half-scale reading on M1. Next, switch to REF. The readings for forward and reflected should be about the same. Next, if you want to check the accuracy of the bridge, connect a dummy antenna (see earlier section) of the appropriate value (50 or 75 ohms) to J2. Switch S1 to FWD and adjust the sensitivity to full scale. Then switch to REF and the reading should drop to zero.

You may find that when you first turn on the Millimatch, there is a slight reading on the meter with the transmitter off. This is the "no-signal current" in the transistor. Assume this value of current as "zero" when the transmitter is turned on.

To use the Millimatch as a matching indicator, simply adjust the Transmatch (or other antenna or line matching network that may be used) for a zero reading with S1 in the REF position. As the null is approached, switch back to FWD occasionally to make certain that the FWD reading remains near full scale; adjusting the matching network may cause enough detuning to bring the FWD reading to a very low value, which will lead to errors in matching. When a good null is obtained in REF with a nearly full-scale reading in FWD, the sensitivity being kept constant for both readings, the match can be considered to be satisfactory.

For making SWR measurements it is advisable to calibrate the instrument by using various values of carbon resistors as loads, since the meter readings cannot be taken as true relative-voltage indications because of nonlinearity in the diodes and transistor. (A resistor does not have to be mounted in a coaxial plug for this purpose, so long as the leads between it and J2 are kept as short as possible.) The ratio of the load resistance to the bridge's designed resistance, or the inverse, gives the standing-wave ratio. For example, a 200-ohm load on a 50-ohm bridge represents an SWR of 200/50, or 4 to 1; a 15-ohm load represents 50/15, or an SWR or 3.3 to 1, and so on. The meter readings corresponding to several such ratios will give the basis for plotting a current-vs.-SWR curve. This calibration should be made with fixed sensitivity, since both the meter reading and the linearity of the circuit will be affected by the setting of R6. Actual SWR measurements should

then always be made at the same power level and sensitivity setting.

As the sensitivity of a bridge of this type increases with frequency, SWR measurements tend to be somewhat uncertain except on the frequency at which the bridge was calibrated. This does not affect the utility of the device as a matching indicator, however.

DIODE NOISE GENERATORS

A noise generator is a device for creating a controllable amount of rf noise ("hiss"-type noise) evenly distributed throughout the spectrum of interest. The simplest type of noise generator is a diode, either vacuum-tube or crystal, with dc flowing through it. The current is also made to flow through a load resistance which usually is chosen to equal the characteristic impedance of the transmission line to be connected to the receiver's input terminals. The resistance then substitutes for the line, and the amount of rf noise fed to receiver input is controlled by varying the dc through the diode.

The noise generator is useful for adjusting the "front-end" circuits of a receiver for best noise figure. A simple circuit using a crystal diode is shown in Fig. 17-55. The unit can be built into a small metal box; the main consideration is that the circuit from C1 through P1 be as compact as possible. A calibrated knob on R1 will permit resetting the generator to roughly the same spot each time, for making comparisons. If the leads are short, the generator can be used through the 144-MHz band for receiver comparisons.

To use the generator, screw the coaxial plug onto the receiver's input fitting, open S1, and measure the noise output of the receiver by connecting an audio-frequency voltmeter to the receiver's af output terminals. An average-reading voltmeter is preferable to the peak-reading type, since on this type of noise the average-reading meter will give a fair approximation of rms, and the object is to measure noise *power*, not voltage.

In using the generator for adjusting the input circuit of a receiver for optimum noise figure, first make sure that the receiver's rf and af gain controls are set well within the linear range of response, and turn off the automatic gain control. With the noise generator connected but S1 open, adjust the receiver gain controls for an output reading that is far enough below the maximum obtainable to ensure that the receiver is operating linearly. This is your reference level of noise. Then close S1 and adjust R1 for a readily perceptible increase in output. Note the *ratio* of the two readings – i.e., the number of dB increase in noise when the generator is on. Then make experimental adjustments of the receiver input coupling, always with the object of obtaining the largest number of dB increase in output when the generator is switched on.

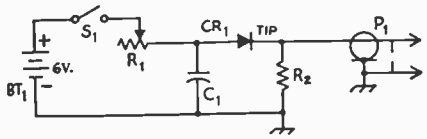

Fig. 17-55 – Circuit of a simple crystal-diode noise generator.
BT1 – Dry-cell battery, any convenient type.
C1 – 500-pF ceramic, disk or tubular.
CR1 – Silicon diode, 1N21 or 1N23. Diodes with "R" suffix have reversed polarity. (Do not use ordinary germanium diodes.)
P1 – Coaxial fitting, cable type.
R1 – 50,000-ohm control, ccw logarithmic taper.
R2 – 51 or 75 ohms, 1/2-watt composition.
S1 – Spst toggle (may be mounted on R1).

A simple crystal-diode noise generator is a useful device for the receiver adjustment, especially at vhf, and for comparing the performance of different receivers checked with the same instrument. It does not permit actual measurement of the noise figure, however, and therefore the results with one instrument cannot readily be compared with the readings obtained with another. In order to get a quantitative measure of noise figure it is necessary to use a temperature-saturated vacuum diode in place of the semiconductor diode. Suitable diodes are difficult to find.

RF PROBE FOR ELECTRONIC VOLTMETERS

The rf probe shown in Figs. 17-56 to 17-59, inclusive, uses the circuit discussed earlier in connection with Fig. 17-15.

The isolation capacitor, C1, crystal diode, and filter/divider resistor are mounted on a bakelite 5-lug terminal strip, as shown in Fig. 17-59. One end lug should be rotated 90 degrees so that it extends off the end of the strip. All other lugs should be cut off flush with the edge of the strip. Where the inner conductor connects to the terminal lug, unravel the shield three-quarters of an inch, slip a piece of spaghetti over it, and then solder the braid to the ground lug on the terminal strip. Remove the spring from the tube shield, slide it over the cable, and crimp it to the remaining quarter inch of shield braid. Solder both the spring and a 12-inch length of flexible copper braid to the shield.

Next, cut off the pins on a seven-pin miniature shield-base tube socket. Use a socket with a cylindrical center post. Crimp the terminal lug previously bent out at the end of the strip and insert it into the center post of the tube socket from the top. Insert the end of a phone tip or a

Fig. 17-56 — Rf probe for use with an electronic voltmeter. The case of the probe is constructed from a 7-pin ceramic tube socket and a 2 1/4-inch tube shield. A half-inch grommet at the top of the tube shield prevents the output lead from chafing. A flexible copper-braid grounding lead and alligator clip provide a low-inductance return path from the test circuit.

pointed piece of heavy wire into the bottom of the tube socket center post, and solder the lug and tip to the center post. Insert a half-inch grommet at the top of the tube shield, and slide the shield over the cable and flexible braid down onto the tube socket. The spring should make good contact with the tube shield to insure that the tube shield (probe case) is grounded. Solder an alligator clip to the other end of the flexible braid and mount a phone plug on the free end of the shielded wire.

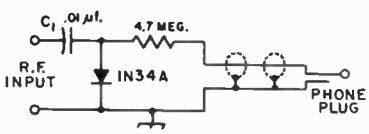

Fig. 17-57 — The rf probe circuit.

Fig. 17-58 — Inside the probe. The 1N34A diode, calibrating resistor, and input capacitor are mounted tight to the terminal strip with shortest leads possible. Spaghetti tubing is placed on the diode leads to prevent accidental short circuits. The tube-shield spring and flexible-copper grounding lead are soldered to the cable braid (the cable is RG-58/U coax). The tip can be either a phone tip or a short pointed piece of heavy wire.

Mount components close to the terminal strip, to keep lead lengths as short as possible and minimize stray capacitance. Use spaghetti over all wires to prevent accidental shorts.

The phone plug on the probe cable plugs into the dc input jack of the electronic voltmeter and rms voltages are read on the voltmeter's negative dc scale.

The accuracy of the probe is within ±10 percent from 50 kHz to 250 MHz. The approximate input impedance is 6000 ohms shunted by 1.75 pF (at 200 MHz).

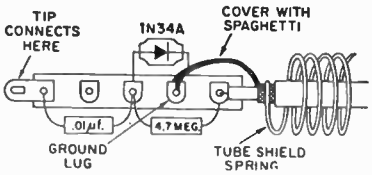

Fig. 17-59 — Component mounting details.

RF IMPEDANCE BRIDGE FOR COAX LINES

The bridge shown in Figs. 1 through 3 may be used to measure unknown complex impedances at frequencies below 30 MHz. Measured values are of equivalent series form, $R + jX$. The useful range of the instrument is from about 5 to 400 ohms if the unknown load is purely resistive, or 10 to 150 ohms resistive component in the presence of reactance. The reactance range is from 0 to approximately 100 ohms for either inductive or capacitive loads. Although the instrument cannot indicate impedances with the accuracy of a laboratory type of bridge, its readings are quite adequate for the measurement and adjustment of antenna systems for amateur use, including the taking of line lengths into account with a Smith chart or Smith transmission-line calculator.

The bridge incorporates a differential capacitor, C1, to obtain an adjustable ratio for measurement of the resistive component of the load. The capacitor consists of two identical sections on the same frame, arranged so that when the shaft is rotated to increase the capacitance of one section, the capacitance of the other section decreases. The capacitor is adjusted for a null reading on M1, and its settings are calibrated in terms of resistance at J3 so the unknown value can be read off the calibration. A coil-and-capacitor combination is used to determine the amount and type of reactance, inductive or capacitive. L1 and C2 in the bridge circuit are connected in series with the load. The instrument is initially balanced at the frequency of measurement with a purely resistive load connected at J3, so that the reactances of L1 and of C2 at its midsetting are equal. Thus, these reactances cancel each other in this arm of the bridge. With an unknown complex-impedance load

then connected at J3, the setting of C2 is varied either to increase or decrease the capacitive reactance, as required, to cancel any reactance present in the load. If the load is inductive more capacitive reactance is required from C2 to obtain a balance, indicated by a null on M1, with less reactance needed from C2 if the load is capacitive. The settings of C2 are calibrated in terms of the value and type of reactance at J3. Because of the relationship of capacitive reactance to frequency, the calibration for the dial of C2 is valid at only one frequency. It is therefore convenient to calibrate this dial for equivalent reactances at 1 MHz, as shown in Fig. 4. Frequency corrections may then be made simply by dividing the reactance dial reading by the measurement frequency in megahertz.

Construction

In any rf-bridge type of instrument, the leads must be kept as short as possible to reduce stray reactances. Placement of component parts, while not critical, must be such that lead lengths greater than about 1/2 inch (except in the dc metering circuit) are avoided. Shorter leads are desirable, especially for R1, the "standard" resistor for the bridge. In the unit photographed, the body of this resistor just fits between the terminals of C1 and J2 where it is connected. C1 should be enclosed in a shield and connections made with leads passing through holes drilled through the shield wall. The frames of both variable capacitors, C1 and C2, must be insulated from the chassis, with insulated couplings used on the shafts. The capacitor specified for C1 has provisions for insulated mounting. C2 is mounted on 1-inch ceramic insulating pillars.

Band-switching arrangements for L1 complicate the construction and contribute to stray reactances in the bridge circuit. For these reasons plug-in coils are used at L1, one coil for each band over which the instrument is used. The coils must be adjustable, to permit initial balancing of the bridge with C2 set at the zero-reactance calibration point. Coil data are given in Table I. Millen 45004 coil forms with the coils supported inside provide a convenient method of constructing these slug-tuned plug-in coils. A phenolic washer cut to the proper diameter is epoxied to the top or open end of each form, giving a rigid support for mounting of the coil by its bushing. Small knobs for 1/8-inch shafts, threaded with a No. 6-32 tap, are screwed onto the coil slug-tuning screws to permit ease of adjustment without a tuning tool. Knobs with setscrews should be used to prevent slipping. A ceramic socket to mate with the pins of the coil form is used for J2.

Calibration

The resistance dial of the bridge may be calibrated by using a number of 1/2- or 1-watt 5-percent-tolerance composition resistors of different values in the 5- to 400-ohm range as loads. For this calibration, the appropriate frequency coil

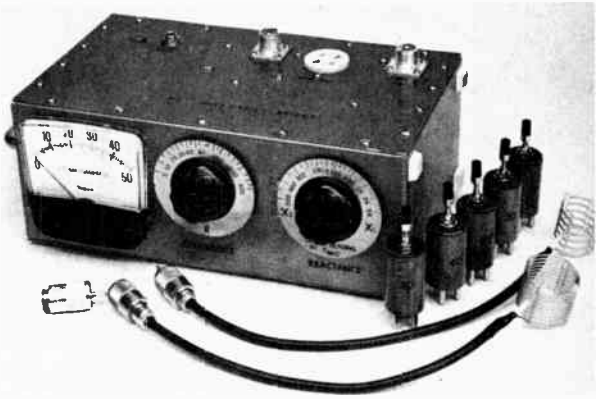

Fig. 1 — An *RCL* bridge for measuring unknown values of complex impedances. A plug-in coil is used for each frequency band. The bridge operates at an rf input level of about 5 volts; pickup-link assemblies for use with a grid-dip oscillator are shown. Before measurements are made, the bridge must be balanced with a nonreactive load connected at its measurement terminals. This load consists of a resistor mounted inside a coaxial plug, shown in front of the instrument at the left. The aluminum box measures 4 1/4 X 10 3/4 X 6 1/8 inches and is fitted with a carrying handle on the left end and self-sticking rubber feet on the right end and bottom. Dials are Millen No. 10009 with skirts reversed and calibrations added.

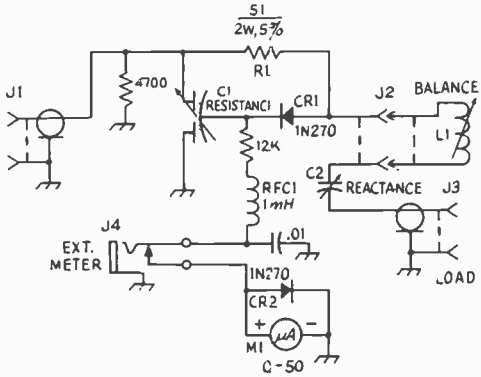

Fig. 2 — Schematic diagram of the impedance bridge. Capacitance is in microfarads; resistances are in ohms. Resistors are 1/2-W 10-percent tolerance unless otherwise indicated.

C1 — Differential capacitor, 11-161 pF per section (Millen 28801).
C2 — 17.5-327 pF with straight-line capacitance characteristic (Hammarlund RMC-325-S).
CR1, CR2 — Germanium diode, high back resistance.
J1, J3 — Coaxial connectors, chassis type.
J2 — To mate plug of L1, ceramic.
J4 — Phone jack, disconnecting type.
L1 — See text and Table I.
M1 — 0-50 μA dc (Simpson Model 1223 Bold-Vue, Cat. No. 15560 or equiv.).
R1 — For text reference.
RFC1 — Subminiature rf choke (Miller 70F103AI or equiv.).

TABLE 17-I

Coil Data for RF Impedance Bridge

Band	*Nominal Inductance Range, µH*	*Frequency Coverage, MHz*	*Coil Type or Data*
80	6.5–13.8	3.2–4.8	28 turns No. 30 enam. wire close-wound on Miller form 42A000CBI.
40	2.0–4.4	5.8–8.5	Miller 42A336CBI or 16 turns No. 22 enam. wire close-wound on Miller form 42A000CBI.
20	0.6–1.1	11.5–16.6	8 turns No. 18 enam. wire close-wound on Miller form 42A000CBI.
15	0.3–0.48	18.5–23.5	4 1/2 turns No. 18 enam. wire close-wound on Miller form 42A000CBI.
10	0.18–0.28	25.8–32.0	3 turns No. 16 or 18 enam. or tinned bus wire spaced over 1/4-inch winding length on Miller form 42A000CBI.

must be inserted at J2 and its inductance adjusted for the best null reading on the meter when C2 is set with its plates half meshed. For each test resistor, C1 is then adjusted for a null reading. Alternate adjustment of L1 and C1 should be made for a complete null. The leads between the test resistor and J3 should be as short as possible, and the calibration preferably should be done in the 3.5-MHz band where stray inductance and capacitance will have the least effect.

If the constructional layout of the bridge closely follows that shown in the photographs, the calibration scale of Fig. 4 may be used for the reactance dial. This calibration was obtained by connecting various reactances, measured on a laboratory bridge, in series with a 47-ohm 1-W resistor connected at J3. The scale is applied so that maximum capacitive reactance is indicated with C2 fully meshed. If it is desired to obtain an individual calibration for C2, known values of inductance and capacitance may be used in series with a fixed resistor of the same approximate value as R1. For this calibration it is *very important* to keep the leads to the test components as short as possible, and calibration should be performed in the 3.5-MHz range to minimize the effects of stray reactances. Begin the calibration by setting C2 at half mesh, marking this point as 0 ohms reactance. With a purely resistive load connected at J3, adjust L1 and C1 for the best null on M1. From this point on during calibration, do not adjust L1 except to rebalance the bridge for a new calibration frequency. The ohmic value of the known reactance for the frequency of calibration is multiplied by the frequency in MHz to obtain the calibration value for the dial.

Using the Impedance Bridge

This instrument is a low-input-power device, and is *not* of the type to be excited from a transmitter or left in the antenna line during station operation. Sufficient sensitivity for all measurements results when a 5-V rms rf signal is applied at J1. This amount of voltage can be delivered by most grid-dip oscillators. In no case should the power applied to J1 exceed 1 watt or calibration inaccuracy may result from a permanent change in the value of R1. The input impedance of the bridge at J1 is low, in the order of 50 to 100 ohms, so it is convenient to excite the bridge through a length of 52- or 75-ohm line such as RG-58/U or RG-59/U. If a grid-dip oscillator is used, a link coupling arrangement to the oscillator coil may be used. Fig. 1 shows two pick-up link assemblies. The larger coil, 10 turns of 1 1/4-inch-dia stock with turns spaced at 8 turns per inch, is used for the 80-, 40- and 20-meter bands. The smaller coil, 5 turns of 1-inch-dia stock with turns spaced at 4 turns per inch, is used for the 15- and 10-meter bands. Coupling to the oscillator should be as light as possible, while obtaining sufficient

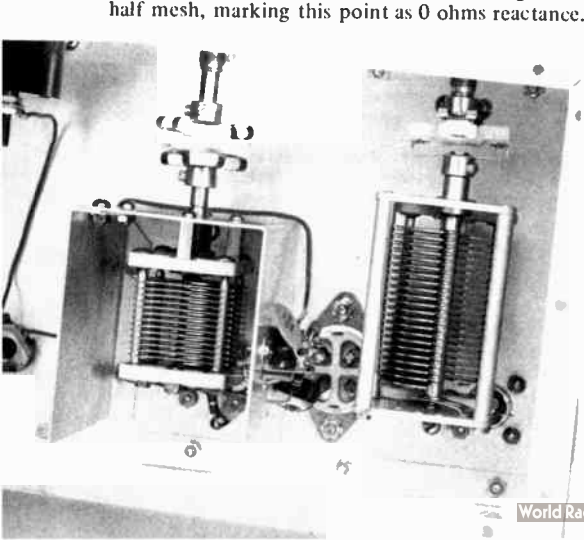

Fig. 3 — All components except the meter are mounted on the top of the box. C1 is visible inside the shield at the left, with C2 at the right and J2 mounted between them. J1 is hidden beneath C1 in this view; a part of J3 may be seen in the lower right corner of the box. Components for the dc metering circuit are mounted on a tie-point strip which is affixed to the shield wall for C1; all other components are interconnected with very short leads. The 4700-ohm input resistor is connected across J1.

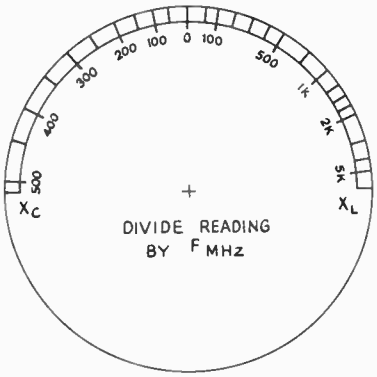

Fig. 4 — Calibration scale for the reactance dial associated with C2. See text.

sensitivity, to prevent severe "pulling" of the oscillator frequency. Over coupling may cause the oscillator to shift in frequency by a few hundred kilohertz, so for the most reliable measurements, a receiver should be used to check the oscillator frequency.

Before measurements are made, it is necessary to balance the bridge. Set the reactance dial at zero and adjust L1 and C1 for a null with a nonreactive load connected at J3. The bridge must be rebalanced after any appreciable change is made in the measurement frequency, more than approximately 1 percent. A 51-ohm 1-W resistor mounted inside a PL-259 plug, as shown in Fig. 1, makes a load which is essentially nonreactive. The body of the resistor should be inserted as far as possible into the plug, and the center pin then soldered. Next, the grounded-end connection should be soldered inside the plug at the top end of the resistor, so that this lead length is no more than approximately 1/4 inch. A 1/2-inch-dia copper disk may be soldered over the end of the plug to enclose the assembly and to prevent the shell of the plug from being removed completely. After the bridge is balanced, connect the unknown load to J3, and alternately adjust C1 and C2 for the best null.

As shown in Fig. 4, the calibration of the reactance dial is nonlinear, with a maximum indication for capacitive reactance of 500. The measurement range for capacitive loads may be extended by "zeroing" the reactance dial at some value other than 0. For example, if the bridge is initially balanced with the reactance dial set at 500 in the X_L range, the 0 dial indication is now equivalent to an X_C reading of 500, and the total range of measurement for X_C has been extended to 1000.

SIMPLE TRANSISTOR TESTERS

The test circuit for bipolar transistors shown in Fig. 17-1 is useful to the experimenter or inveterate purchaser of "bargain" transistors. It can be built on a piece of Vectorbord; the two flashlight cells can be plugged into a battery holder. The contacts marked C, B and E can be a transistor socket or flexible leads terminated in miniature clips, or both.

For testing, set S1 at LEAK, and try S3 in both positions if the transistor type is unknown. In the correct position, only a small reading should appear on the meter. This is the collector-emitter leakage current.

With S1 closed to GAIN, a current of 30 μA (LO) or slightly more than 1 mA (HI) is fed to the base. In the LO position the meter maximum is less than 1 mA; in the HI position the maximum is about 200 mA.

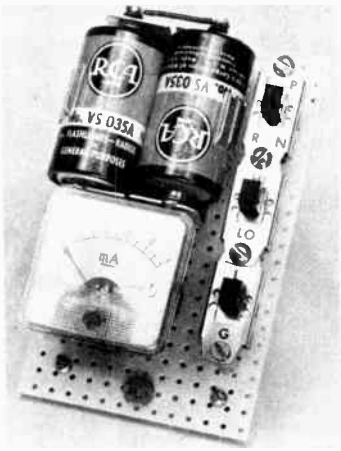

Fig. 1 — The transistor-checker circuit of Fig. 2 assembled on a piece of perforated circuit board. Transistor under test is plugged into the socket under the meter.

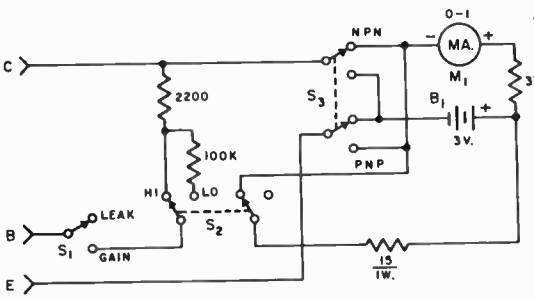

Fig. 2 — Circuit diagram of the transistor tester. Resistors are 1/2 watt.
B1 — Two C cells connected in series.
M1 — 0-1 milliammeter.
S1,S2, S3 — Dpdt miniature slide switch.

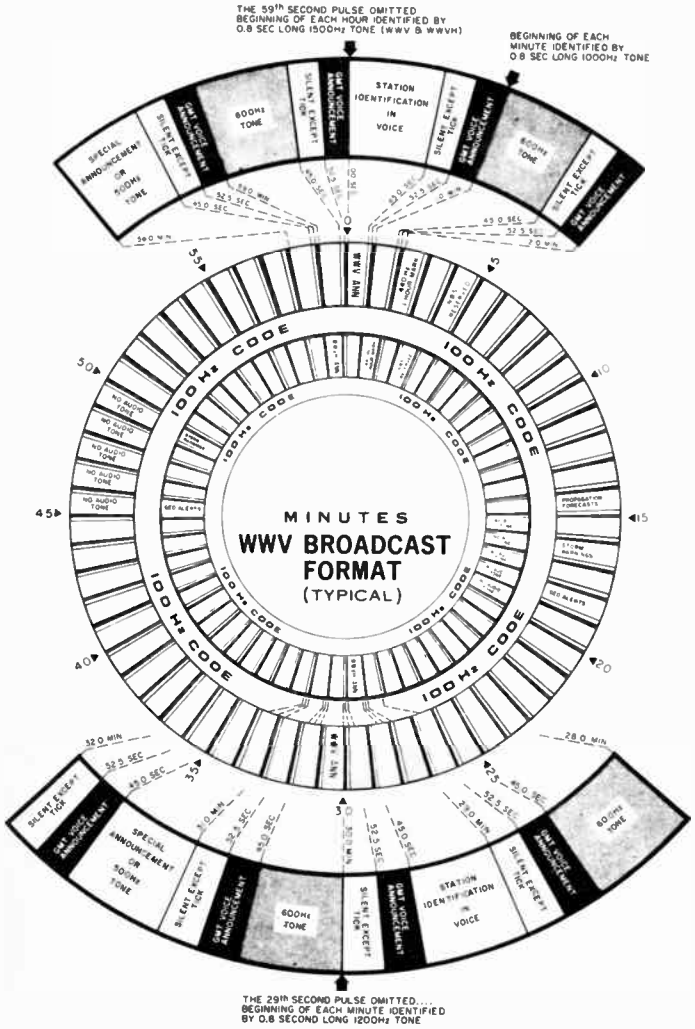

STANDARD FREQUENCIES AND TIME SIGNALS

The National Bureau of Standards maintains two radio transmitting stations, WWV at Ft. Collins, Co., and WWVH near Kekaha, Kauai (Hawaii), for broadcasting standard radio frequencies of high accuracy. WWV broadcasts are on 2.5, 5, 10, 15, 20, and 25 MHz, and those from WWVH are on 2.5, 5, 10, 15, and 20 MHz. The broadcasts of both stations are continuous, night and day. Standard audio frequencies of 440, 500, and 600 Hz on each radio-carrier frequency by WWV and WWVH. The duration of each tone is approximately 45 seconds. A 600-Hz tone is broadcast during odd minutes by WWV, and during even minutes by WWVH. A 500-Hz tone is broadcast during alternate minutes unless voice announcements or silent periods are scheduled. A 440-Hz tone is broadcast beginning one minute after the hour by WWVH and two minutes after the hour by WWV. The 440-Hz tone period is omitted during the first hour of the UT day.

Transmitted frequencies from the two stations are accurate to ±2 parts in 10^{11}. Atomic frequency standards are used to maintain this accuracy.

Voice announcements of the time, in English, are given every minute. WWV utilizes a male voice, and WWVH features a female voice to distinguish between the two stations. WWV time and frequency broadcasts can be heard by telephone also. The number to call is (303) 499-7111, Boulder, CO.

All official announcements are made by voice. Time announcements are in GMT. One-second markers are transmitted throughout all programs except that the 29th and 59th markers of each minute are omitted. Detailed information on hourly broadcast schedules is given in the accompanying format chart. Complete information on the services can be found in NBS Special Publication 236, *NBS Frequency and Time Broadcast Services*, available for 25 cents from the Superintendent of Documents, U. S. Government Printing Office, Washington, D.C. 20402.

Geophysical Alerts

"Geoalerts" are broadcast in voice during the 19th minute of each hour from WWV and during the 46th minute of each hour from WWVH. The messages are changed each day at 0400 UT with provisions to schedule immediate alerts of outstanding occuring events. Geoalerts tell of geophysical events affecting radio propagation, stratospheric warming, etc.

Propagation Forecasts

Voice broadcasts of radio propagation conditions are given during part of every 15th minute of each hour from WWV. The announcements deal with short-term forecasts and refer to propagation along paths in the North Atlantic area, such as Washington, D.C. to London, or New York to Berlin.

CHU

CHU, the Canadian time-signal station, transmits on 3330.0, 7335.0 and 14,670.0 kHz. Voice announcements of the minute are made each minute; the 29th-second tick is omitted. Voice announcements are made in English and French.

Construction Practices and Data Tables

TOOLS AND MATERIALS

While an easier, and perhaps a better, job can be done with a greater variety of tools available, by taking a little thought and care it is possible to turn out a fine piece of equipment with only a few of the common hand tools. A list of tools which will be indispensable in the construction of radio equipment will be found on this page. With these tools it should be possible to perform any of the required operations in preparing panels and metal chassis for assembly and wiring. It is an excellent idea for the amateur who does constructional work to add to his supply of tools from time to time as finances permit.

RECOMMENDED TOOLS

Long-nose pliers, 6-inch and 4-inch
Diagonal cutters, 6-inch and 4-inch
Combination pliers, 6-inch
Screwdriver, 6- to 7-inch, 1/4-inch blade
Screwdriver, 4- to 5-inch, 1/8-inch blade
Phillips screwdriver, 6- to 7-inch
Phillips screwdriver, 3- to 4-inch
Long-shank screwdriver with holding clip on blade
Scratch awl or scriber for marking metal
Combination square, 12-inch, for layout work
Hand drill, 1/4-inch chuck or larger
Soldering pencil, 30-watt, 1/8-inch tip
Soldering iron, 200-watt, 5/8-inch tip
Hacksaw and 12-inch blades
Hand nibbling tool, for chassis-hole cutting
Hammer, ball-peen, 1-lb head
Heavy-duty jack knife
File set, flat, round, half-round, and triangular. Large and miniature types recommended
High-speed drill bits, No. 60 through 3/8-inch diameter
Set of "Spintite" socket wrenches for hex nuts
Crescent wrench, 6- and 10-inch
Machine-screw taps, 4-40 through 10-32 thread
Socket punches, 1/2", 5/8", 3/4", 1 1/8", 1 1/4", and 1 1/2"
Tapered reamer, T-handle, 1/2-inch maximum pitch
Bench vise, 4-inch jaws or larger
Medium-weight machine oil
Tin shears, 10-inch size
Motor-driven emery wheel for grinding
Solder, *rosin core only*
Contact cleaner, liquid or spray can
Duco cement or equivalent
Electrical tape, vinyl plastic

Radio-supply houses, mail-order retail stores and most hardware stores carry the various tools required when building or servicing amateur radio equipment. While power tools (electric drill or drill press, grinding wheel, etc.) are very useful and will save a lot of time, they are not essential.

Twist Drills

Twist drills are made of either high-speed steel or carbon steel. The latter type is more common and will usually be supplied unless specific request is made for high-speed drills. The carbon drill will suffice for most ordinary equipment construction work and costs less than the high-speed type.

While twist drills are available in a number of sizes, those listed in bold-faced type in Table 18-1 will be most commonly used in construction of amateur equipment. It is usually desirable to purchase several of each of the commonly used sizes rather than a standard set, most of which will be used infrequently if at all.

Care of Tools

The proper care of tools is not alone a matter of pride to a good workman. He also realizes the energy which may be saved and the annoyance which may be avoided by the possession of a full kit of well-kept sharp-edged tools.

Drills should be sharpened at frequent intervals so that grinding is kept at a minimum each time. This makes it easier to maintain the rather critical surface angles required for best cutting with least wear. Occasional oilstoning of the cutting edges of a drill or reamer will extend the time between grindings.

The soldering iron can be kept in good condition by keeping the tip well tinned with solder and not allowing it to run at full voltage for long periods when it is not being used. After each period of use, the tip should be removed and cleaned of any scale which may have accumulated. An oxidized tip may be cleaned by dipping it in sal ammoniac while hot and then wiping it clean with a rag. If the tip becomes pitted it should be filed until smooth and bright, and then tinned immediately by dipping it in solder.

Useful Materials

Small stocks of various miscellaneous materials will be required in constructing radio apparatus, most of which are available from hardware or radio-supply stores. A representative list follows:

Fig. 18-1 – Small enough to fit in the palm of your hand, the SCR motor-speed control is housed in a small Minibox.

Sheet aluminum, solid and perforated, 16 or 18 gauge, for brackets and shielding.
1/2 X 1/2-inch aluminum angle stock.
1/ 4-inch diameter round brass or aluminum rod for shaft extensions. Machine screws: Round-head and flat-head, with nuts to fit. Most useful sizes: 4-40, 6-32 and 8-32, in lengths from 1/4 inch to 1 1/2 inches. (Nickel-plated iron will be found satisfactory except in strong rf fields, where brass should be used.)
Bakelite, lucite and polystyrene scraps.
Soldering lugs, panel bearings, rubber grommets, terminal-lug wiring strips, varnished-cambric insulating tubing.
Shielded and unshielded wire.
Tinned bare wire, Nos. 22, 14 and 12.

Machine screws, nuts, washers, soldering lugs, etc., are most reasonably purchased in quantities of a gross. Many of the radio-supply stores sell small quantities and assortments that come in handy.

SCR MOTOR-SPEED CONTROL

Most electric hand drills operate at a single high speed; however, from time to time, the need arises to utilize low or medium speeds. Low speeds are useful when drilling in tight spaces or on exposed surfaces where it is important that the drill bit doesn't slip, and when drilling bakelite, Plexiglas and similar materials. Medium speeds are useful for drilling non-ferrous metals such as aluminum and brass. One way to accomplish these ends with a single-speed electric drill is to use a silicon-controlled-rectifier (SCR) speed control.

The circuit of an SCR speed control is shown in Fig. 18-2. The SCR, CR1, acts like an open circuit until it receives a positive trigger pulse between gate and cathode. If at this time the anode is negative with respect to the cathode, nothing will happen and the SCR will still appear to be an open circuit. If, however, the anode is positive with respect to the cathode when the positive trigger pulse arrives at the gate, the SCR will function like a normal diode and conduct. Once triggered, the SCR will continue to conduct until the voltage between the anode and the cathode returns to zero and reverses polarity. It will then cease to conduct and not conduct again, even when the correct forward polarity appears, until the gate receives another positive pulse. The timing of the gate pulse determines the instant at which conduction begins during a possible 180-degree conduction period for sine wave input.

The trigger circuit consists of C1, R1, R2 and neon lamp I1. When the voltage across C1 reaches the ignition voltage of I1, the neon lamp fires and sends a pulse to the gate of the SCR. The setting of R2 determines the charging rate of C1 and thus the conduction angle of the SCR. Decreasing R2 increases the speed of an electric drill plugged in the output connector, J1.

Construction

Because of the small complement of parts, the SCR speed control can be constructed inside a very

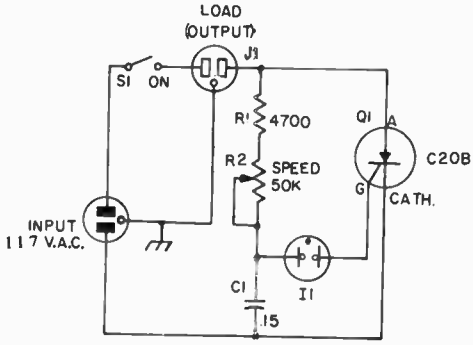

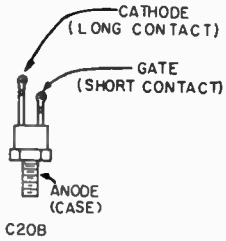

Fig. 18-2 – Circuit diagram of the SCR motor-speed control
C1 – 0.15-μF 200-V paper tubular.
I1 – NE-2 neon lamp.
J1 – Chassis-mounting line socket (Amphenol 61-F1).
Q1 – C20B SCR (General Electric).
R1 – 4700-ohm 1/20watt composition.
R2 – 50,000-ohm linear-taper control.
S1 – Spst toggle.

small container. The model described was built in a 2 3/4 X 2 1/8 X 1 5/8-inch Minibox. Since the mounting stud and main body of the SCR are common with the anode, care should be used to mount the SCR clear from surrounding objects. In the unit shown, two soldering lugs were soldered together and the narrow ends connected to one side of the female output connector; the large ends were used as a fastening point for the SCR anode stud.

Operation

Although the circuit described is intended to be used to reduce the speed of electric hand drills that draw six amperes or less, it has many other applications. It can be used to regulate the temperature of a soldering iron, which is being used to wire a delicate circuit, or it may be used for dimming lamps or for controlling the cooking speed of a small hot plate. Note, however, if the circuit is used with a device drawing from three to six amperes for a continuous period of over ten minutes, it will be necessary to provide a heat sink (insulated from the chassis) for the SCR anode case.

CHASSIS WORKING

With a few essential tools and proper procedure, it will be found that building radio gear on a metal chassis is a relatively simple matter. Aluminum is to be preferred to steel, not only because it is a superior shielding material, but because it is much easier to work and provides good chassis contacts.

The placing of components on the chassis is shown quite clearly in the photographs in this *Handbook*. Aside from certain essential dimensions, which usually are given in the text, exact duplication is not necessary.

Much trouble and energy can be saved by spending sufficient time in planning the job. When all details are worked out beforehand the actual construction is greatly simplified.

Cover the top of the chassis with a piece of wrapping paper, or, preferably, cross-section paper, folding the edges down over the sides of the chassis and fastening with adhesive tape. Then assemble the parts to be mounted on top of the chassis and move them about until a satisfactory arrangement has been found, keeping in mind any parts which are to be mounted underneath, so that interferences in mounting may be avoided. Place capacitors and other parts with shafts extending through the panel first, and arrange them so that

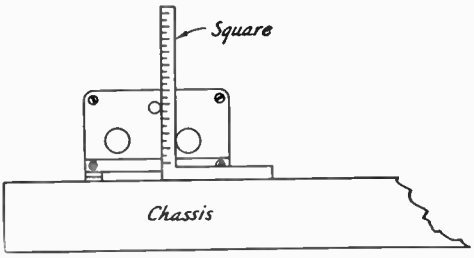

Fig. 18-3 — Method of measuring the heights of capacitor shafts. If the square is adjustable, the end of the scale should be set flush with the face of the head.

TABLE 18-I

Numbered Drill Sizes

Num.	*Diameter (Mils)*	*Will Clear Screw*	*Drilled for Tapping from Steel or Brass**
1	228.0	—	—
2	221.0	12-24	—
3	213.0	—	14-24
4	209.0	12-20	—
5	205.0	—	—
6	204.0	—	—
7	201.0	—	—
8	199.0	—	—
9	196.0	—	—
10	193.5	10-32	—
11	191.0	10-24	—
12	189.0	—	—
13	185.0	—	—
14	182.0	—	—
15	180.0	—	—
16	177.0	—	12-24
17	173.0	—	—
18	169.5	8-32	—
19	166.0	—	12-20
20	161.0	—	—
21	159.0	—	10-32
22	157.0	—	—
23	154.0	—	—
24	152.0	—	—
25	149.5	—	10-24
26	147.0	—	—
27	144.0	—	—
28	140.0	6-32	—
29	136.0	—	8-32
30	128.5	—	—
31	120.0	—	—
32	116.0	—	—
33	113.0	4-40	—
34	111.0	—	—
35	110.0	—	6-32
36	106.5	—	—
37	104.0	—	—
38	101.5	—	—
39	099.5	3-48	—
40	098.0	—	—
41	096.0	—	—
42	093.5	—	4-40
43	089.0	2-56	—
44	086.0	—	—
45	082.0	—	3-48
46	081.0	—	—
47	078.5	—	—
48	076.0	—	—
49	073.0	—	2-56
50	070.0	—	—
51	067.0	—	—
52	063.5	—	—
53	059.5	—	—
54	055.0	—	—

***Use one size larger for tapping bakelite and phenolics.**

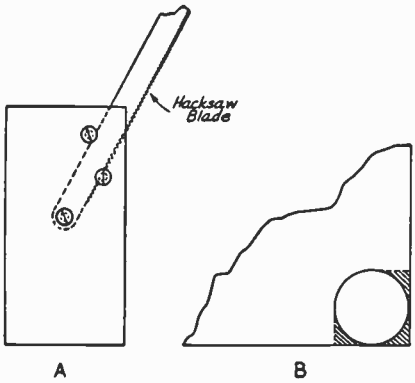

Fig. 18-4 — To cut rectangular holes in a chassis corner, holes may be filed out as shown in the shaded portion of B, making it possible to start the hack-saw blade along the cutting line. A shows how a single-ended handle may be constructed for a hack-saw blade.

the controls will form the desired pattern on the panel. Be sure to line up the shafts squarely with the chassis front. Locate any partition shields and panel brackets next, and then the tube sockets and any other parts, marking the mounting-hole centers of each accurately on the paper. Watch out for capacitors whose shafts are off center and do not line up with the mounting holes. Do not forget to mark the centers of socket holes and holes for leads under i-f transformers, etc., as well as holes for wiring leads. The small holes for socket-mounting screws are best located and center-punched, using the socket itself as a template, after the main center hole has been cut.

By means of the square, lines indicating accurately the centers of shafts should be extended to the front of the chassis and marked on the panel at the chassis line, the panel being fastened on temporarily. The hole centers may then be punched in the chassis with the center punch. After drilling, the parts which require mounting underneath may be located and the mounting holes drilled, marking sure by trial that no interferences exist with parts mounted on top. Mounting holes along the front edge of the chassis should be transferred to the panel, by once again fastening the panel to the chassis and marking it from the rear.

Next, mount on the chassis the capacitors and any other parts with shafts extending to the panel, and measure accurately the height of the center of each shaft above the chassis, as illustrated in Fig. 18-3. The horizontal displacement of shafts having already been marked on the chassis line on the panel, the vertical displacement can be measured from this line. The shaft centers may now be marked on the back of the panel, and the holes drilled. Holes for any other panel equipment coming above the chassis line may then be marked and drilled, and the remainder of the apparatus mounted. Holes for terminals etc., in the rear edge of the chassis should be marked and drilled at the same time that they are done for the top.

Drilling and Cutting Holes

When drilling holes in metal with a hand drill it is important that the centers first be located with a center punch, so that the drill point will not "walk" away from the center when starting the hole. When the drill starts to break through, special care must be used. Often it is an advantage to shift a two-speed drill to low gear at this point. Holes more than 1/4-inch in diameter should be started with a smaller drill and reamed out with the larger drill.

The check on the usual type of hand drill is limited to 1/4-inch drills. Although it is rather tedious, the 1/4-inch hole may be filed out to larger diameters with round files. Another method possible with limited tools is to drill a series of small holes with the hand drill along the inside of the circumference of the large hole, placing the holes as close together as possible. The center may then be knocked out with a cold chisel and the edges smoothed up with a file. Taper reamers which fit into the carpenter's brace will make the job easier. A large rat-tail file clamped in the brace makes a very good reamer for holes up to the diameter of the file.

For socket holes and other large holes in an aluminum chassis, socket-hole punches should be used. They require first drilling a guide hole to pass the bolt that is turned to squeeze the punch through the chassis. The threads of the bolt should be oiled occasionally.

Large holes in steel panels or chassis are best cut with an adjustable circle cutter. Occasional application of machine oil in the cutting groove will help. The cutter first should be tried out on a block of wood, to make sure that it is set for the right diameter.

The burrs or rough edges which usually result after drilling or cutting holes may be removed with a file, or sometimes more conveniently with a sharp knife or chisel. It is a good idea to keep an old wood chisel sharpened and available for this purpose.

Rectangular Holes

Square or rectangular holes may be cut out by making a row of small holes as previously described, but is more easily done by drilling a 1/2-inch hole inside each corner, as illustrated in Fig. 18-4, and using these holes for starting and turning the hack saw. The socket-hole punch and the square punches which are now available also may be of considerable assistance in cutting out large rectangular openings.

SEMICONDUCTOR HEAT SINKS

Homemade heat sinks can be fashioned from brass, copper or aluminum stock by employing ordinary workshop tools. The dimensions of the heat sink will depend upon the type of transistor used, and the amount of heat that must be conducted away from the body of the semiconductor.

Fig. 18-5 shows the order of progression for forming a large heat sink from aluminum or brass

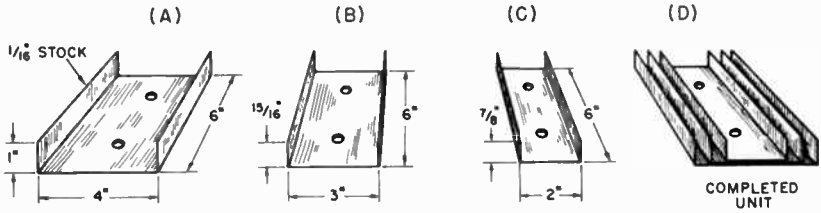

Fig. 18-5 — Details for forming channel type heat sinks.

channels of near-equal height and depth. The width is lessened in parts (B) and (C) so that each channel will fit into the preceding one as shown in the completed model at (D). The three pieces are bolted together with 8-32 screws and nuts. Dimensions given are for illustrative purposes only.

Heat sinks for smaller transistors can be fabricated as shown in Fig. 18-7. Select a drill bit that is one size smaller than the diameter of the transistor case and form the heat sink from 1/16 inch thick brass, copper or aluminum stock as shown in steps (A), (B), and (C). Form the stock around the drill bit by compressing it in a vise (A). The completed heat sink is press-fitted over the body of the semiconductor as illustrated at (D). The larger the area of the heat sink, the greater will be the amount of heat conducted away from the transistor body. In some applications, the heat sinks shown in Fig. 18-7 may be two or three inches in height (power transistor stages).

Another technique for making heat sinks for TO-5 type transistors (1) and larger models (1) is shown in Fig. 18-6. This style of heat sink will dissipate considerably more heat than will the type shown in Fig. 18-5. The main body of the sink is fashioned from a piece of 1/8-inch thick aluminum angle bracket — available from most hardware stores. A hole is bored in the angle stock to allow the transistor case to fit *snugly* into it. The

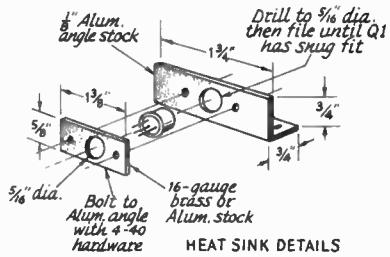

Fig. 18-6 — Layout and assembly details of another homemade heat sink. The completed assembly can be insulated from the main chassis of the transmitter by using insulating washers.

transistor is held in place by a small metal plate whose center hole is slightly smaller in diameter than the case of the transistor. Details are given in Fig. 18-6.

A thin coating of silicone grease, available from most electronics supply houses, can be applied between the case of the transistor and the part of the heat sink with which it comes in contact. The silicone grease will aid the transfer of heat from the transistor to the sink. This practice can be applied to all models shown here. In the example given in Fig. 18-5, the grease should be applied between the

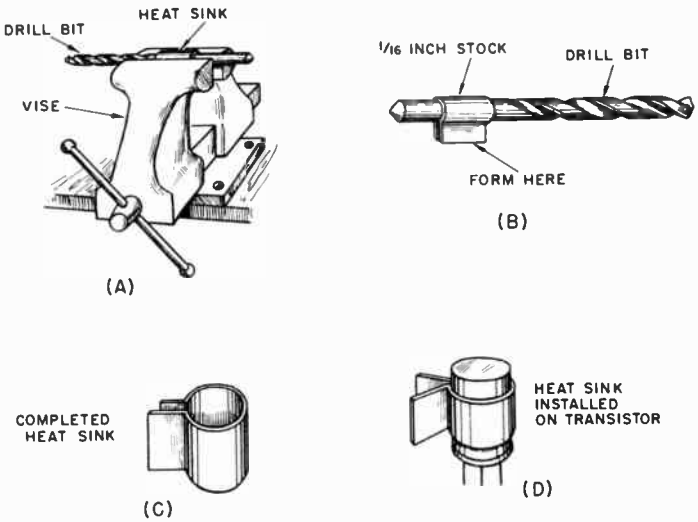

Fig. 18-7 — Steps used in constructing heat sinks for small transistors.

three channels before they are bolted together, as well as between the transistor and the channel it contacts.

CONSTRUCTION NOTES

If a control shaft must be extended or insulated, a flexible shaft coupling with adequate insulation should be used. Satisfactory support for the shaft extension, as well as electrical contact for safety, can be provided by means of a metal panel bearing made for the purpose. These can be obtained singly for use with existing shafts, or they can be bought with a captive extension shaft included. In either case the panel bearing gives a "solid" feel to the control.

The use of fiber washers between ceramic insulation and metal brackets, screws or nuts will prevent the ceramic parts from breaking.

STANDARD METAL GAUGES

Gauge No.	*American or B&S*[1]	*U.S. Standard*[2]	*Birmingham or Stubs*[3]
1	.2893	.28125	.300
2	.2576	.265625	.284
3	.2294	.25	.259
4	.2043	.234375	.238
5	.1819	.21875	.220
6	.1620	.203125	.203
7	.1443	.1875	.180
8	.1285	.171875	.165
9	.1144	.15625	.148
10	.1019	.140625	.134
11	.09074	.125	.120
12	.08081	.109375	.109
13	.07196	.09375	.095
14	.06408	.078125	.083
15	.05707	.0703125	.072
16	.05082	.0625	.065
17	.04526	.05625	.058
18	.04030	.05	.049
19	.03589	.04375	.042
20	.03196	.0375	.035
21	.02846	.034375	.032
22	.02535	.03125	.028
23	.02257	.028125	.025
24	.02010	.025	.022
25	.01790	.021875	.020
26	.01594	.01875	.018
27	.01420	.0171875	.016
28	.01264	.015625	.014
29	.01126	.0140625	.013
30	.01003	.0125	.012
31	.008928	.0109375	.010
32	.007950	.01015625	.009
33	.007080	.009375	.008
34	.006350	.00859375	.007
35	.005615	.0078125	.005
36	.005000	.00703125	.004
37	.004453	.006640626	....
38	.003965	.00625	....
39	.003531	.....	....
40	.003145	.....	....

[1] Used for aluminum, copper, brass and non-ferrous alloy sheets, wire and rods.

[2] Used for iron, steel, nickel and ferrous alloy sheets, wire and rods.

[3] Used for seamless tubes; also by some manufacturers for copper and brass.

Cutting and Bending Sheet Metal

If a sheet of metal is too large to be cut conveniently with a hack saw, it may be marked with scratches as deep as possible along the line of the cut on both sides of the sheet and then clamped in a vise and worked back and forth until the sheet breaks at the line. Do not carry the bending too far until the break begins to weaken; otherwise the edge of the sheet may become bent. A pair of iron bars or pieces of heavy angle stock, as long or longer than the width of the sheet, to hold it in the vise, will make the job easier. "C" clamps may be used to keep the bars from spreading at the ends. The rough edges may be smoothed with a file or by placing a large piece of emery cloth or sandpaper on a flat surface and running the edge of the metal back and forth over the sheet. Bends may be made similarly.

Finishing Aluminum

Aluminum chassis, panels and parts may be given a sheen finish by treating them in a caustic bath. An enamelled or plastic container, such as a dishpan or infant's bathtub, should be used for the solution. Dissolve ordinary household lye in cold water in a proportion of 1/4 to 1/2 can of lye per gallon of water. The stronger solution will do the job more rapidly. Stir the solution with a stick of wood until the lye crystals are completely dissolved. Be very careful to avoid any skin contact with the solution. It is also harmful to clothing. Sufficient solution should be prepared to cover the piece completely. When the aluminum is immersed, a very pronounced bubbling takes place and ventilation should be provided to disperse the escaping gas. A half hour to two hours in the solution should be sufficient, depending upon the strength of the solution and the desired surface.

Remove the aluminum from the solution with sticks and rinse thoroughly in cold water while swabbing with a rag to remove the black deposit. When dry, finish by spraying on a light coat of clear lacquer.

Soldering

The secret of good soldering is to use the right amount of heat. Too little heat will produce a "cold-soldered joint"; too much may injure a component. The iron and the solder should be applied simultaneously to the joint. Keep the iron clean by brushing the hot tip with a paper towel. Always use rosin-core solder, never acid-core. Solders have different melting points, depending upon the ratio of tin to lead. A 50-50 solder melts at 425 degrees F, while 60-40 melts at 371 degrees F. When it is desirable to protect from excessive heat the components being soldered, the 60-40 solder is preferable to the 50-50. (A less-common solder, 63-37, melts at 361 degrees F.)

When soldering transistors, crystal diodes or small resistors, the lead should be gripped with a pair of pliers up close to the unit so that the heat will be conducted away. Overheating of a transistor or diode while soldering can cause permanent damage. Also, mechanical stress will have a similar

effect, so that a small unit should be mounted so that there is no appreciable mechanical strain on the leads.

Trouble is sometimes experienced in soldering to the pins of coil forms or male cable plugs. It helps if the pins are first cleaned on the inside with a suitable twist drill and then tinned by flowing rosin-core solder into them. Immediately clear the surplus solder from each hot pin by a whipping motion or by blowing through the pin from the inside of the form or plug. Before inserting the wire in the pin, file the nickel plate from the tip. After soldering, round the solder tip off with a file.

When soldering to the pins of polystyrene coil forms, hold the pin to be soldered with a pair of heavy pliers, to form a "heat sink" and insure that the pin does not heat enough in the coil form to loosen and become misaligned.

Wiring

The wire used in connecting amateur equipment should be selected considering both the maximum current it will be called upon to handle and the voltage its insulation must stand without breakdown. Also, from the consideration to TVI, the power wiring of all transmitters should be done with wire that has a braided shielding cover. Receiver and audio circuits may also require the use of shielded wire at some points for stability, or the elimination of hum.

No. 20 stranded wire is commonly used for most receiver wiring (except for the high-frequency circuits) where the current does not exceed 2 or 3 amperes. For higher-current heater circuits, No. 18 is available. Wire with cellulose acetate insulation is good for voltages up to about 500. For higher voltages, themoplastic-insulated wire should be used. Inexpensive wire strippers that make the removal of insulation from hookup wire an easy job are available on the market.

When power leads have several branches in the chassis, it is convenient to use fiber-insulated multiple tie points as anchorages or junction points. Strips of this type are also useful as insulated supports for resistors, rf chokes and capacitors. High-voltage wiring should have exposed points held to a minimum; those which cannot be avoided should be made as inaccessible as possible to accidental contact or short-circuit.

Where shielded wire is called for and capacitance to ground is not a factor, Belden type 8885 shielded grid wire may be used. If capacitance must be minimized, it may be necessary to use a piece of car-radio low-capacitance lead-in wire, or coaxial cable.

For wiring high-frequency circuits, rigid wire is often used. Bare soft-drawn tinned wire, size 22 to 12 (depending on mechanical requirements) is suitable. Kinks can be removed by stretching a piece of 10 or 15 feet long and then cutting into short lengths that can be handled conveniently. Rf wiring should be run directly from point to point with a minimum of sharp bends and the wire kept well spaced from the chassis or other grounded metal surfaces. Where the wiring must pass through the chassis or a partition, a clearance hole should be cut and lined with a rubber grommet. In case insulation becomes necessary, varnished cambric tubing (spaghetti) can be slipped over the wire.

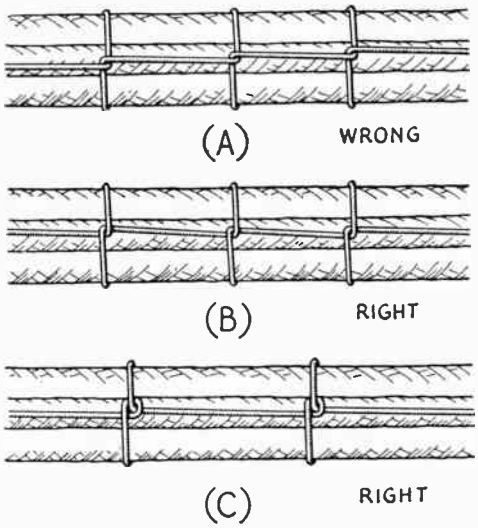

Fig. 18-8 — Methods of lacing cables. The method shown at C is more secure, but takes more time than the method of B. The latter is usually adequate for most amateur requirements.

In transmitters where the peak voltage does not exceed 2500 volts, the shielded grid wire mentioned above should be satisfactory for power circuits. For higher voltages, Belden type 8656, Birnbach type 1820, or shielded ignition cable can be used. In the case of filament circuits carrying heavy current, it may be necessary to use No. 10 or 12 bare or enameled wire, slipped through spaghetti, and then covered with copper braid pulled tightly over the spaghetti. The chapter on TVI shows the manner in which shielded wire should be applied. If the shielding is simply slid back over the insulation and solder flowed into the end of the braid, the braid usually will stay in place without the necessity for cutting it back or binding it in place. The braid should be cleaned first so that solder will take with a minimum of heat.

Rf wiring in transmitters usually follows the method described above for receivers with due respect to the voltages involved.

Where power or control leads run together for more than a few inches, they will present a better appearance when bound together in a single cable. The correct technique is illustrated in Fig. 18-8; both plastic and waxed-linen lacing cords are available. Plastic cable clamps are available to hold the laced cable.

To give a "commercial look" to the wiring of any unit, run any cabled leads along the edge of the chassis. If this isn't possible, the cabled leads should then run parallel to an edge of the chassis. Further, the generous use of tie points (mounted parallel to an edge of the chassis), for the support of one or both ends of a resistor or fixed capacitor,

BNC Connectors

1.—Cut end of cable even.

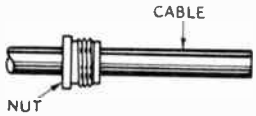

2.—Remove vinyl jacket ½"—*don't nick braid.*

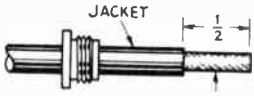

3.—Push braid back and remove ⅛" of insulation and conductor.

4.—Taper braid.

5.—Slide sleeve over tapered braid. Fit inner shoulder or sleeve squarely against end of jacket.

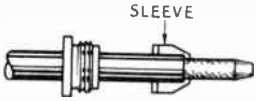

6.—With sleeve in place, comb out braid, fold back smooth as shown, and trim 3/32".

7.—Bare center conductor ⅛"—*don't nick conductor.*

8.—Tin center conductor of cable. Slip female contact in place and solder. Remove excess solder. *Be sure cable dielectric is not heated excessively and swollen so as to prevent dielectric entering body.*

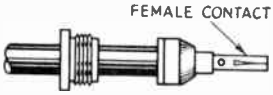

9.—Push into body as far as it will go. Slide nut into body and screw into place, with wrench, until it is moderately tight. Hold cable and shell rigidly and rotate nut.

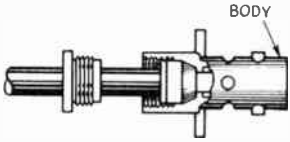

10.—This assembly procedure applies to BNC jacks. The assembly for plugs is the same except for the use of male contacts and a plug body.

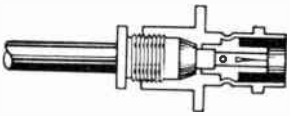

83-1SP Plug

1.—Cut end of cable even. Remove vinyl jacket 1⅛"—*don't nick braid.*

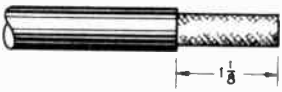

2.—Bare ¾" of center conductor—*don't nick conductor.* Trim braided shield 1/16" and tin. Slide coupling ring on cable.

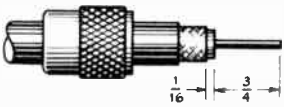

3.—Screw the plug assembly on cable. Solder plug assembly to braid through solder holes. Solder conductor to contact sleeve.

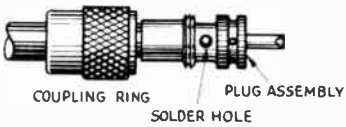

4.—Screw coupling ring on assembly.

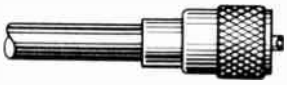

83-1SP Plug with Adapters

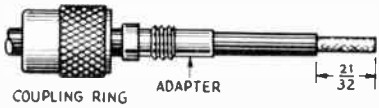

1.—Cut end of cable even. Remove vinyl jacket 21/32"—*don't nick braid.* Slide coupling ring and adapter on cable.

2.—Fan braid slightly and fold back over cable.

3.—Compress braid around cable. Position adapter to dimension shown. Press braid down over body of adapter to dimension shown. Press braid down over body of adapter and trim.

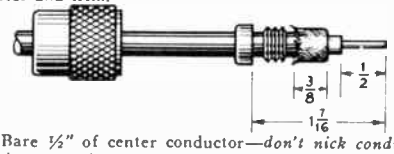

4.—Bare ½" of center conductor—*don't nick conductor.* Pre-tin exposed center conductor.

5, 6.—Same as 3 and 4 under 83-1SP Plug.

Fig. 18-9 — Cable-stripping dimensions and assembly instructions for several popular coaxial-cable plugs. This material courtesy Amphenol Connector Division, Amphenol-Borg Electronics Corp.

will add to the appearance of the finished unit. In a similar manner, "dress" the small components so that they are parallel to the panel or sides of the chassis.

Winding Coils

Close-wound coils are readily wound on the specified form by anchoring one end of a length of wire (in a vise or to a doorknob) and the other end to the coil form. Straighten any kinks in the wire and then pull to keep the wire under slight tension. Wind the coil to the required number of turns while walking toward the anchor, always maintaining a slight tension on the wire.

To space-wind the coil, wind the coil simultaneously with a suitable spacing medium (heavy thread, string or wire) in the manner described above. When the winding is complete, secure the end of the coil to the coil-form terminal and then carefully unwind the spacing material. If the coil is wound under suitable tension, the spacing material can be easily removed without disturbing the winding. Finish the space-wound coil by judicious applications of Duco cement, to hold the turns in place.

The "cold" end of a coil is the end at or close to chassis or ground potential. Coupling links should be wound on the cold end of a coil, to minimize capacitive coupling.

CIRCUIT-BOARD FABRICATION

Many modern-day builders prefer the neatness and miniaturization made possible by the use of etched or printed circuit boards. There are additional benefits to be realized from the use of circuit boards: Low lead inductances, excellent physical stability of the components and interconnecting leads, and good repeatability of the basic layout of a given project. The latter attribute makes the use of circuit boards ideal for group projects.

Methods

Perhaps the least complicated approach to circuit-board fabrication is the use of unclad perforated board into which a number of push-in terminals have been installed. The perforated board can be obtained with one of many hole patterns, dependent upon the needs of the builder. Perforated terminal boards are manufactured by such firms as Vector, Kepro, and Triad. Their products are available from the large mail-order houses.

Once the builder plots the layout of his circuit on paper, push-in terminals can be installed in the "perf" board to match the layout which was done on paper. The terminals serve as tie points and provide secure mounting-post anchors for the various components. Selected terminals can be wired together to provide ground and B-plus lines. Although this technique is the most basic of the methods, it is entirely practical.

An approach to etched-circuit board assembly can be realized by cutting strips of flashing copper, hobby copper, or brass shim stock into the desired shapes and lengths, then gluing them to a piece of unclad circuit board. Epoxy cement is useful for the latter. Alternatively, the strips can be held in place by means of brass eyelets which have been installed with a hand eyelet tool. If standard unclad circuit board is not handy, linoleum or Formica sheeting can be made to serve as a base for the circuit board. If this technique is used, the metal strips should be soldered together at each point where they join, assuring good electrical contact.

Etched-circuit boards provide the most professional end result of the three systems described here. They are the most stable, physically and electrically, and can be easily repeated from a single template. Etched-circuits can be formed on copper-clad perforated board, or on unpunched copper-clad board. There is no advantage in using the perforated board as a base unless push-in terminals are to be used.

Planning and Layout

The constructor should first plan the physical layout of the circuit by sketching a pictorial diagram on paper, drawing it to scale. Once this has been done, the interconnecting leads can be inked in to represent the copper strips that will remain on the etched board. The Vector Company sells layout paper for this purpose. It is marked with the same patterns that are used on their perforated boards.

After the basic etched-circuit design has been completed the designer should go over the proposed layout several times to insure against errors. When the foregoing has been done, the pattern can be painted on the copper surface of the board to be etched. Etch-resistant solutions are available from commercial suppliers and can be selected from their catalogs. Some builders prefer to use India ink for this purpose. Perhaps the most readily-available material for use in etch-resist applications is ordinary exterior enamel paint. The portions of the board to be retained are covered with a layer of paint, applied with an artist's brush, duplicating the pattern that was drawn on the layout paper. The job can be made a bit easier by tracing over the original layout with a ballpoint pen and carbon paper while the pattern is taped to the copper side of the unetched circuit board. The carbon paper is placed between the pattern and the circuit board. After the paint has been applied, it should be allowed to dry for at least 24 hours prior to the etching process. The Vector Company produces a rub-on transfer material that can also be used as etch-resist when laying out circuit-board patterns. Thin strips of ordinary masking tape, cut to size and firmly applied, serve nicely as etch-resist material too.

The Etching Process

Almost any strong acid bath will serve as an etchant, but the two chemical preparations recommended here are the safest to use. A bath can be prepared by mixing 1 part ammonium persulphate crystals with 2 parts clear water. A

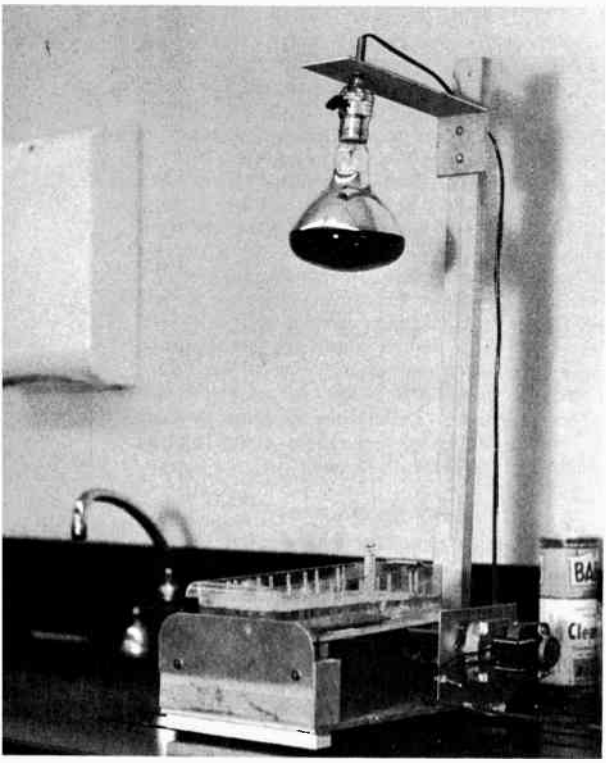

Fig. 18-10 — A homemade stand for processing etched-circuit boards. The heat lamp maintains the etchant-bath temperature between 90 and 115 degrees, F. and is mounted on an adjustable arm. The tray for the bath is raised and lowered at one end by the action of a motor-driven eccentric disk, providing the necessary agitation of the chemical solution. A darkroom thermometer monitors the temperature of the bath.

normal quantity of working solution for most amateur radio applications is composed of 1 cup of crystals and 2 cups of water. To this mixture add 1/4 teaspoon of mercuric chloride crystals. The latter serves as an activator for the bath. Ready-made etchant kits which use these chemicals are available from Vector. A two-bag kit is sold as item 2594 and costs just over $1. Complete kits which contain circuit boards, etchant powders, etch-resist transfers, layout paper, and plastic etchant bags are also available from Vector at moderate prices.

Another chemical bath that works satisfactorily for copper etching is made up from one part ferric chloride crystals and 2 parts water. No activator is required with this bath. Ready-made solutions (one-pint and one-gallon sizes) are available through some mail-order houses at low cost. They are manufactured by Kepro Co. and carry a stock number of E-1PT and E-1G, respectively. One pint costs less than a dollar.

Etchant solutions become exhausted after a certain amount of copper has been processed, therefore it is wise to keep a quantity of the bath on hand if frequent use is anticipated. With either chemical bath, the working solution should be maintained at a temperature between 90 and 115 degrees F. A heat lamp can be directed toward the bath during the etching period, its distance set to maintain the required temperature. A darkroom thermometer is handy for monitoring the temperature of the bath.

While the circuit board is immersed in the solution, it should be agitated continuously to permit uniform reaction to the chemicals. This action will also speed up the etching process somewhat. Normally, the circuit board should be placed in the bath with the copper side facing down, toward the bottom of the tray. The tray should be non-metallic, preferably a Pyrex dish or a photographic darkroom tray.

The photograph, Fig. 18-10, shows a home-made etching stand made up from a heat lamp, some lumber, and an 8 rpm motor. An eccentric disk has been mounted on the motor shaft and butts against the bottom of the etchant tray. As the motor turns, the eccentric disk raises and lowers one end of the try, thus providing continuous agitation of the solution. The heat lamp is mounted on an adjustable, slotted wooden arm. Its height above the solution tray is adjusted to provide the desired bath temperature. Because the etching process takes between 15 minutes and one hour —dependent upon the strength and temperature of the bath — such an accessory is convenient.

After the etching process is completed, the board is removed from the tray and washed thoroughly with fresh, clear water. The etch-resist material can then be rubbed off by applying a few brisk strokes with medium-grade steel wool. WARNING: *Always use rubber gloves when working with etchant powders and solutions. Should the acid bath come in contact with the body, immediately wash the affected area with clear water. Protect the eyes when using acid baths.*

COMPONENT VALUES

Values of composition resistors and small capacitors (mica and ceramic) are specified throughout this *Handbook* in terms of "preferred values." In the preferred-number system, all values represent (approximately) a constant-percentage increase over the next lower value. The base of the system is the number 10. Only two significant figures are used.

"Tolerance" means that a variation of plus or minus the percentage given is considered satisfactory. For example, the actual resistance of a "4700-ohm" 20-percent resistor can lie anywhere between 3700 and 5600 ohms, approximately. The permissible variation in the same resistance value with 5-percent tolerance would be in the range from 4500 to 4900 ohms, approximately.

In the component specifications in this *Handbook*, it is to be understood that when no tolerance is specified the *largest* tolerance available in that value will be satisfactory.

Values that do not fit into the preferred-number system (such as 500, 25,000 etc.) easily

can be substituted. It is obvious, for example, that a 5000-ohm resistor falls well within the tolerance range of the 4700-ohm 20-percent resistor used in the example above. It would not, however, be usable if the tolerance were specified as 5 percent.

TABLE 18-II

Approximate Series-Resonance Frequencies of Disc Ceramic Bypass Capacitors

Capacitance	*Freq.*[1]	*Freq.*[2]
.01 μF	13 MHz	15 MHz
.0047	18	22
.002	31	38
.001	46	55
.0005	65	80
.0001	135	165

[1] Total lead length of 1 inch
[2] Total lead length of 1/2-inch

COLOR CODES

Standardized color codes are used to mark values on small components such as composition resistors and mica capacitors, and to identify leads from transformers, etc. The resistor-capacitor number color code is given in Table 18-III.

Fixed Capacitors

The methods of marking "postage-stamp" mica capacitors, molded paper capacitors and tubular ceramic capacitors are shown in Fig. 18-11.

Capacitors made to American War Standards or Joint Army-Navy specifications are marked with the 6-dot code shown at the top. Practically all surplus capacitors are in this category.

The 3-dot EIA code is used for capacitors having a rating of 500 volts and ±20 percent tolerance only; other ratings and tolerances are covered by the 6-dot EIA code.

Example: A capacitor with a 6-dot code has the following markings: Top row, left to right, black, yellow, violet; bottom row, right to left, brown, silver, red. Since the first color in the top row is black (significant figure zero) this is the AWS code and the capacitor has mica dielectric. The significant figures are 4 and 7, the decimal multiplier 10 (brown, at right of second row), so the capacitance is 470 pF. The tolerance is +0%. The final color, the characteristic, deals with temperature coefficients and methods of testing (see Table 18-V).

A capacitor with a 3-dot code has the following colors, left to right: brown, black, red. The significant figures are 1, 0 (10) and the multiplier is 100. The capacitance is therefore 100 pF.

A capacitor with a 6-dot code has the following markings: Top row, left to right, brown, black, black; bottom row, right to left, black, gold, blue. Since the first color in the top row is neither black nor silver, this is the EIA code. The significant figures are 1, 0, 0 (100) and the decimal multiplier is 1 (black). The capacitance is therefore 100 pF. The gold dot shows that the tolerance is ±5% and the blue dot indicates 600-volt rating.

Ceramic Capacitors

Conventional markings for ceramic capacitors are shown in the lower drawing of Fig. 18-11. The colors have the meanings indicated in Table 18-III. In practice, dots may be used instead of the *narrow* bands indicated in Fig. 18-11.

Example: A ceramic capacitor has the following markings: Broad band, violet; narrow bands or dots, green, brown, black, green. The significant figures are 5, 1 (51) and the decimal multiplier is 1, so the capacitance is 51 pF. The temperature coefficient is −750 parts per million per degree C., as given by the broad band, the capacitance tolerance is ±5%.

Fixed Composition Resistors

Composition resistors (including small wire-wound units molded in cases identical with the composition type) are color-coded as shown in Fig. 18-12. Colored bands are used on resistors having axial leads; on radial-lead resistors the colors are placed as shown in the drawing. When bands are used for color coding the body color has no significance.

Examples: A resistor of the type shown in the lower drawing of Fig. 18-12 has the following color bands: A, red; B, red; C, orange; D, no color. The significant figures are 2, 2 (22) and the decimal multiplier is 1000. The value of resistance is therefore 22,000 ohms and the tolerance is ±20%.

A resistor of the type shown in the upper drawing has the following colors: body (A), blue; end (B), gray; dot, red; end (D), gold. The significant figures are 6, 8 (68) and the decimal multiplier is 100, so the resistance is 6800 ohms. The tolerance is ± 5%.

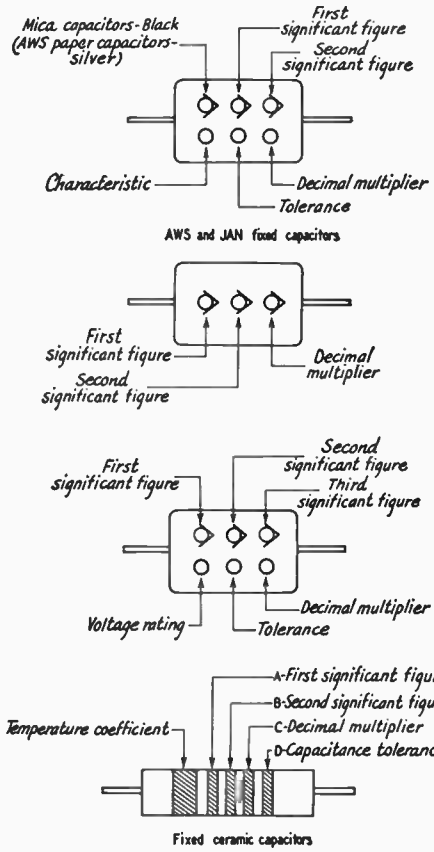

Fig. 18-11 — Color coding of fixed mica, molded paper and tubular ceramic capacitors. The color code for mica and molded paper capacitors is given in Table 18-III. Table 18-IV gives the color code for tubular ceramic capacitors.

TABLE 18-III

Resistor-Capacitor Color Code

Color	Significant Figure	Decimal Multiplier	Tolerance (%)	Voltage Rating*
Black	0	1	–	–
Brown	1	10	1*	100
Red	2	100	2*	200
Orange	3	1,000	3*	300
Yellow	4	10,000	4*	400
Green	5	100,000	5*	500
Blue	6	1,000,000	6*	600
Violet	7	10,000,000	7*	700
Gray	8	100,000,000	8*	800
White	9	1,000,000,000	9*	900
Gold	–	0.1	5	1000
Silver	–	0.01	10	2000
No color	–		20	500

* Applies to capacitors only.

TABLE 18-IV

Color Code for Ceramic Capacitors

Color	Significant Figure	Decimal Multiplier	Capacitance Tolerance: More than 10 pF (in %)	Capacitance Tolerance: Less than 10 pF (in pF)	Temp. Coeff. ppm /deg. C.
Black	0	1	±20	2.0	0
Brown	1	10	± 1		– 30
Red	2	100	± 2		– 80
Orange	3	1000			–150
Yellow	4				–220
Green	5				–330
Blue	6		± 5	0.5	–470
Violet	7				–750
Gray	8	0.01		0.25	30
White	9	0.1	±10	1.0	500

TABLE 18-V

Capacitor Characteristic Code

Color Sixth Dot	Temperature Coefficient ppm/deg. C.	Capacitance Drift
Black	±1000	±5% +1 pF
Brown	±500	±3% +1 pF
Red	±200	±0.5%
Orange	±100	±0.3%
Yellow	–20 to +100	±0.1% +0.1 pF
Green	0 to +70	±0.05% +0.1 pF

I-f Transformers

Blue – plate lead.
Red – "B" + lead.
Green – grid (or diode) lead.
Black – grid (or diode) return.

NOTE: If the secondary of the i-f transformer is center-tapped, the second diode plate lead is green-and-black striped, and black is used for the center-tap lead.

Audio Transformers

Blue – plate (finish) lead of primary.
Red – "B" + lead (this applies whether the primary is plain or center-tapped).
Brown – plate (start) lead on center-tapped primaries. (Blue may be used for this lead if polarity is not important.)
Green – grid (finish) lead to secondary.
Black – grid return (this applies whether the secondary is plain or center-tapped).
Yellow – grid (start) lead on center-tapped secondaries. (Green may be used for this lead if polarity is not important.)

NOTE: These markings apply also to line-to-grid and tube-to-line transformers.

Power Transformers

1) Primary Leads ..... *Black*
   If tapped:
   Common ..... *Black*
   Tap ..... *Black and Yellow Striped*
   Finish ..... *Black and Red Striped*
2) High-Voltage Place Winding ..... *Red*
   Center-Tap ..... *Red and Yellow Striped*
3) Rectifier Filament Winding ..... *Yellow*
   Center-Tap ..... *Yellow and Blue Striped*
4) Filament Winding No. 1 ..... *Green*
   Center-Tap ..... *Green and Yellow Striped*
5) Filament Winding No. 2 ..... *Brown*
   Center-Tap ..... *Brown and Yellow Striped*
6) Filament Winding No. 3 ..... *Slate*
   Center-Tap ..... *Slate and Yellow Striped*

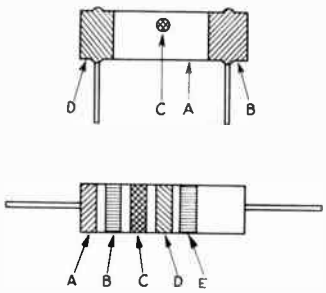

Fig. 18-12 – Color coding of fixed composition resistors. The color code is given in Table 18-III. The colored areas have the following significance:
A – First significant figure of resistance in ohms.
B – Second significant figure.
C – Decimal multiplier.
D – Resistance tolerance in percent. If no color is shown the tolerance is ±20 percent.
E – Relative percent change in value per 1000 hours of operation; Brown, 1 percent; Red, 0.1 percent; Orange, .01 percent; Yellow, .001 percent.

Fixed composition resistors

TABLE 18-VI

Color Code for Hookup Wire

Wire Color	*Type of Circuit*
Black	Grounds, grounded elements, and returns
Brown	Heaters or filaments, off ground
Red	Power supply B plus
Orange	Screen grids and Base 2 of transistors
Yellow	Cathodes and transistor emitters
Green	Control grids, diode plates, and Base 1 of transistors
Blue	Plates and transistor collectors
Violet	Power supply, minus leads
Gray	Ac power line leads
White	Bias supply, B or C minus, agc

Wires with tracers are coded in the same manner as solid-color wires, allowing additional circuit identification over solid-color wiring. The body of the wire is white and the color band spirals around the wire lead. When more than one color band is used, the widest band represents the 1st color.

TABLE 18-VII

Metric Multiplier Prefixes

Multiples and submultiples of fundamental units (e.g., ampere, farad, gram, meter, watt)) may be indicated by the following prefixes.

Prefix	*Abbreviation*	*Multiplier*
tera	T	10^{12}
giga	G	10^{9}
mega	M	10^{6}
kilo	k	10^{3}
hecto	h	10^{2}
deci	d	10^{-1}
centi	c	10^{-2}
milli	m	10^{-3}
micro	μ	10^{-6}
nano	n	10^{-9}
pico	p	10^{-12}

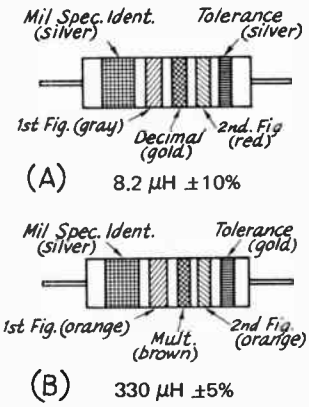

Fig. 18-13 — Color coding for tubular encapsulated rf chokes. At A, an example of the coding for an 8.2-μH choke is given. At B, the color bands for a 330-μH inductor are illustrated.

Color	*Figure*	*Multiplier*	*Tolerance*
Black	0	1	
Brown	1	10	
Red	2	100	
Orange	3	1000	
Yellow	4		
Green	5		
Blue	6		
Violet	7		
Gray	8		
White	9		
None			20%
Silver			10%
Gold			5%

Multiplier is the factor by which the two color figures are multiplied to obtain the inductance value of the choke coil.

PILOT-LAMP DATA

Lamp No.	*Bead Color*	*Base (Miniature)*	*Bulb Type*	RATING *Volts*	RATING *Amp.*
40	Brown	Screw	T-3 1/4	6–8	0.15
40A[1]	Brown	Bayonet	T-3 1/4	6–8	0.15
41	White	Screw	T-3 1/4	2.5	0.5
42	Green	Screw	T-3 1/4	3.2	**
43	White	Bayonet	T-3 1/4	2.5	0.5
44	Blue	Bayonet	T-3 1/4	6–8	0.25
45	*	Bayonet	T-3 1/4	3.2	**
46[2]	Blue	Screw	T-3 1/4	6–8	0.25
47[1]	Brown	Bayonet	T-3 1/4	6–9	0.15
48	Pink	Screw	T-3 1/4	2.0	0.06
49[3]	Pink	Bayonet	T-3 1/4	2.0	0.06
49A[3]	White	Bayonet	T-3 1/4	2.1	0.12
50	White	Screw	G-3 1/2	6–8	0.2
51[2]	White	Bayonet	G-3 1/2	6–8	0.2
53	—	Bayonet	G-3 1/2	14.4	0.12
55	White	Bayonet	G-4 1/2	6–8	0.4
292[5]	White	Screw	T-3 1/4	2.9	0.17
292A[5]	White	Bayonet	T-3 1/4	2.9	0.17
1455	Brown	Screw	G-5	18.0	0.25
1455A	Brown	Bayonet	G-5	18.0	0.25
1487	—	Screw	T-3 1/4	12–16	0.20
1488	—	Bayonet	T-3 1/4	14	0.15
1813	—	Bayonet	T-3 1/4	14.4	0.10
1815	—	Bayonet	T-3 1/4	12–16	0.20

1 40A and 47 are interchangeable.
2 Have frosted bulbs.
3 49 and 49A are interchangeable.
4 Replace with No. 48.
5 Use in 2.5-volt sets where regular bulb burns out too frequently.
* White in G.E. and Sylvania; green in National Union, Raytheon and Tung-Sol.
** 0.35 in G.E. and Sylvania; 0.5 in National Union, Raytheon and Tung-Sol.

COPPER-WIRE TABLE

Wire Size A.W.G. (B&S)	Diam. in Mils [1]	Circular Mil Area	Turns per Linear Inch [2] Enamel	S.C.E.	D.C.C.	Cont.-duty current [3] single wire in open air	Cont.-duty current [3] wires or cables in conduits or bundles	Feet per Pound, Bare	Ohms per 1000 ft. 25° C.	Current Carrying Capacity [4] at 700 C.M. per Amp.	Diam. in mm.	Nearest British S.W.G. No.
1	289.3	83690	—	—	—	—	—	3.947	.1264	119.6	7.348	1
2	257.6	66370	—	—	—	—	—	4.977	.1593	94.8	6.544	3
3	229.4	52640	—	—	—	—	—	6.276	.2009	75.2	5.827	4
4	204.3	41740	—	—	—	—	—	7.914	.2533	59.6	5.189	5
5	181.9	33100	—	—	—	—	—	9.980	.3195	47.3	4.621	7
6	162.0	26250	—	—	—	—	—	12.58	.4028	37.5	4.115	8
7	144.3	20820	—	—	—	—	—	15.87	.5080	29.7	3.665	9
8	128.5	16510	7.6	—	7.1	73	46	20.01	.6405	23.6	3.264	10
9	114.4	13090	8.6	—	7.8	—	—	25.23	.8077	18.7	2.906	11
10	101.9	10380	9.6	9.1	8.9	55	33	31.82	1.018	14.8	2.588	12
11	90.7	8234	10.7	—	9.8	—	—	40.12	1.284	11.8	2.305	13
12	80.8	6530	12.0	11.3	10.9	41	23	50.59	1.619	9.33	2.053	14
13	72.0	5178	13.5	—	12.8	—	—	63.80	2.042	7.40	1.828	15
14	64.1	4107	15.0	14.0	13.8	32	17	80.44	2.575	5.87	1.628	16
15	57.1	3257	16.8	—	14.7	—	—	101.4	3.247	4.65	1.450	17
16	50.8	2583	18.9	17.3	16.4	22	13	127.9	4.094	3.69	1.291	18
17	45.3	2048	21.2	—	18.1	—	—	161.3	5.163	2.93	1.150	18
18	40.3	1624	23.6	21.2	19.8	16	10	203.4	6.510	2.32	1.024	19
19	35.9	1288	26.4	—	21.8	—	—	256.5	8.210	1.84	.912	20
20	32.0	1022	29.4	25.8	23.8	11	7.5	323.4	10.35	1.46	.812	21
21	28.5	810.1	33.1	—	26.0	—	—	407.8	13.05	1.16	.723	22
22	25.3	642	37.0	31.3	30.0	—	5	514.2	16.46	.918	.644	23
23	22.6	510	41.3	—	37.6	—	—	648.4	20.76	.728	.573	24
24	20.1	404	46.3	37.6	35.6	—	—	817.7	26.17	.577	.511	25
25	17.9	320	51.7	—	38.6	—	—	1031	33.00	.458	.455	26
26	15.9	254	58.0	46.1	41.8	—	—	1300	41.62	.363	.405	27
27	14.2	202	64.9	—	45.0	—	—	1639	52.48	.288	.361	29
28	12.6	160	72.7	54.6	48.5	—	—	2067	66.17	.228	.321	30
29	11.3	127	81.6	—	51.8	—	—	2607	83.44	.181	.286	31
30	10.0	101	90.5	64.1	55.5	—	—	3287	105.2	.144	.255	33
31	8.9	80	101	—	59.2	—	—	4145	132.7	.114	.227	34
32	8.0	63	113	74.1	62.6	—	—	5227	167.3	.090	.202	36
33	7.1	50	127	—	66.3	—	—	6591	211.0	.072	.180	37
34	6.3	40	143	86.2	70.0	—	—	8310	266.0	.057	.160	38
35	5.6	32	158	—	73.5	—	—	10480	335	.045	.143	38-39
36	5.0	25	175	103.1	77.0	—	—	13210	423	.036	.127	39-40
37	4.5	20	198	—	80.3	—	—	16660	533	.028	.113	41
38	4.0	16	224	116.3	83.6	—	—	21010	673	.022	.101	42
39	3.5	12	248	—	86.6	—	—	26500	848	.018	.090	43
40	3.1	10	282	131.6	89.7	—	—	33410	1070	.014	.080	44

[1] A mil is .001 inch. [2] Figures given are approximate only; insulation thickness varies with manufacturer. [3] Max. wire temp. of 212° F and max. ambient temp. of 135° F. [4] 700 circular mils per ampere is a satisfactory design figure for small transformers, but values from 500 to 1000 c.m. are commonly used.

SEMICONDUCTOR DIODE COLOR CODE

The "1N" prefix is omitted. A double-width band, which also identifies the cathode terminal end of the diode, is usually used as the first band. (An alternative method uses equal band widths with the set clearly grouped toward the cathode end.) The code is read starting at the cathode end.

Diodes having two-digit numbers are coded with a black band followed by second and third bands. A suffix letter is indicated by a fourth band.

Diodes with three-digit numbers are coded with the sequence numbers in the first, second and third bands. Any suffix letter is indicated by a fourth band.

Diodes with four-digit numbers are coded by four bands followed by a black band. A suffix letter is indicated by a fifth band replacing the black band.

The color code (numbers) is the same as the resistor-capacitor code. The suffix-letter code is A—brown, B—red, C—orange, D—yellow, E—green, and F—blue.

Wave Propagation

Much of the appeal of amateur communication lies in the fact that the results are not always predictable. Transmission conditions on the same frequency vary with the year, season and with the time of day. Although these variations usually follow certain established patterns, many peculiar effects can be observed from time to time. Every radio amateur should have some understanding of the known facts about radio wave propagation so that he will stand some chance of interpreting the unusual conditions when they occur. The observant amateur is in an excellent position to make worthwhile contributions to the science, provided he has sufficient background to understand his results. He may discover new facts about propagation at the very-high frequencies or in the microwave region, as amateurs have in the past. In fact, it is through amateur efforts that most of the extended-range possibilities of various radio frequencies have been discovered, both by accident and by long and careful investigation.

CHARACTERISTICS OF RADIO WAVES

Radio waves, like other forms of electromagnetic radiation such as light, travel at a speed of 300,000,000 meters per second in free space, and can be reflected, refracted, and diffracted.

An electromagnetic wave is composed of moving fields of electric and magnetic force. The lines of force in the electric and magnetic fields are at right angles, and are mutually perpendicular to the direction of travel. A simple representation of a wave is shown in Fig. 19-1. In this drawing the electric lines are perpendicular to the earth and the magnetic lines are horizontal. They could, however, have any position with respect to earth so long as they remain perpendicular to each other.

The plane containing the continuous lines of electric and magnetic force shown by the grid- or mesh-like drawing in Fig. 19-1 is called the wave front.

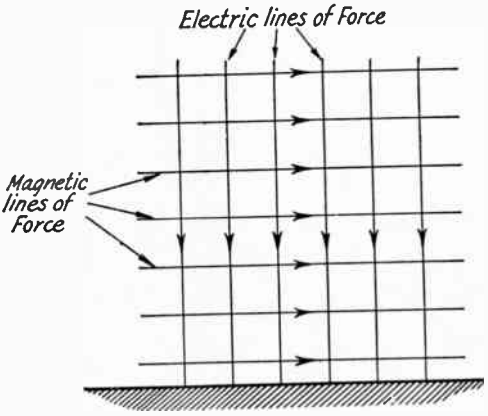

Fig. 19-1 — Representation of electric and magnetic lines of force in a radio wave. Arrows indicate instantaneous directions of the fields for a wave traveling toward the reader. Reversing the direction of one set of lines would reverse the direction of travel.

The medium in which electromagnetic waves travel has a marked influence on the speed with which they move. When the medium is empty space the speed, as stated above, is 300,000,000 meters per second. It is almost, but not quite, that great in air, and is much less in some other substances. In dielectrics, for example, the speed is inversely proportional to the square root of the dielectric constant of the material.

When a wave meets a good conductor it cannot penetrate it to any extent (although it will travel through a dielectric with ease) because the electric lines of force are practically short circuited.

Polarization

The polarization of a radio wave is taken as the direction of the lines of force in the electric field. If the electric lines are perpendicular to the earth, the wave is said to be vertically polarized; if parallel with the earth, the wave is horizontally polarized. The longer waves, when traveling along the ground, usually maintain their polarization in the same plane as was generated at the antenna. The polarization of shorter waves may be altered during travel, however, and sometimes will vary quite rapidly.

Spreading

The field intensity of a wave is inversely proportional to the distance from the source. Thus if in a uniform medium one receiving point is twice as far from the transmitter as another, the field strength at the more distant point will be just half the field strength at the nearer point. This results from the fact that the energy in the wave front must be distributed over a greater area as the wave moves away from the source. This inverse-distance law is based on the assumption that there is nothing in the medium to absorb energy from the wave as it travels. This is not the case in practical communication along the ground and through the atmosphere.

Fig. 19-2 – Showing how both direct and reflected waves may be received simultaneously.

Types of Propagation

According to the altitudes of the paths along which they are propagated, radio waves may be classified as ionospheric waves, tropospheric waves or ground waves.

The ionospheric or sky wave is that part of the total radiation that is directed toward the ionosphere. Depending upon variable conditions in that region, as well as upon transmitting wave length, the ionospheric wave may or may not be returned to earth by the effects of refraction and reflection.

The tropospheric wave is that part of the total radiation that undergoes refraction and reflection in regions of abrupt change of dielectric constant in the troposphere, such as may occur at the boundaries between air masses of differing temperature and moisture content.

The ground wave is that part of the total radiation that is directly affected by the presence of the earth and its surface features. The ground wave has two components. One is the surface wave, which is an earth-guided wave, and the other is the space wave (not to be confused with the ionospheric or sky wave). The space wave is itself the resultant of two components – the direct wave and the ground-reflected wave, as shown in Fig. 19-2.

IONOSPHERIC PROPAGATION

PROPERTIES OF THE IONOSPHERE

Except for distances of a few miles, nearly all amateur communication on frequencies below 30 MHz is by means of the sky wave. Upon leaving the transmitting antenna, this wave travels upward from the earth's surface at such an angle that it would continue out into space were its path not bent sufficiently to bring it back to earth. The medium that causes such bending is the ionosphere, a region in the upper atmosphere, above a height of about 60 miles, where free ions and electrons exist in sufficient quantity to have an appreciable effect on wave travel.

The ionization in the upper atmosphere is believed to be caused by ultraviolet radiation from the sun. The ionosphere is not a single region but is composed of a series of layers of varying densities of ionization occurring at different heights. Each layer consists of a central region of relatively dense ionization that tapers off in intensity both above and below.

Refraction

The greater the intensity of ionization in a layer, the more the path of the wave is bent. The bending, or refraction (often also called reflection), also depends on the wavelength; the longer the wave, the more the path is bent for a given degree of ionization. Thus low-frequency waves are more readily bent those those of high frequency. For this reason the lower frequencies – 3.5 and 7 MHz – are more "reliable" than the higher frequencies – 14 to 28 MHz; there are times when the ionization is of such low value that waves of the latter frequency range are not bent enough to return to earth.

Absorption

In traveling through the ionosphere the wave gives up some of its energy by setting the ionized particles into motion. When the moving ionized particles collide with others this energy is lost. The absorption from this cause is greater at lower frequencies. It also increases with the intensity of ionization, and with the density of the atmosphere in the ionized region.

Virtual Height

Although an ionospheric layer is a region of considerable depth, it is convenient to assign to it a definite height, called the virtual height. This is the height from which a simple reflection would give the same effect as the gradual bending that actually takes place, as illustrated in Fig. 19-3. The wave traveling upward is bent back over a path having an appreciable radius of turning, and a measurable inteval of time is consumed in the turning process. The virtual height is the height of a triangle having equal sides of a total length proportional to the time taken for the wave to travel from *T* to *R*.

Normal Structure of the Ionosphere

The lowest useful ionized layer is called the *E* layer. The average height of the region of maximum ionization is about 70 miles. The air at this height is sufficiently dense so that the ions and

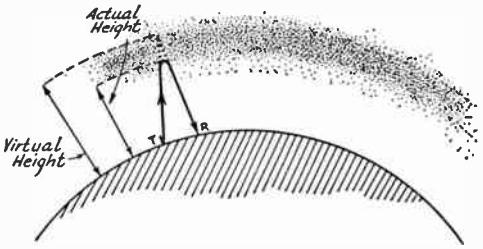

Fig. 19-3 – Bending in the ionosphere, and the echo or reflection method of determining virtual height.

electrons set free by the sun's radiation do not travel far before they meet and recombine to form neutral particles, so the layer can maintain its normal intensity of ionization only in the presence of continuing radiation from the sun. Hence the ionization is greatest around local noon and practically disappears after sundown.

In the daytime there is a still lower ionized area, the *D* region. *D*-region ionization is proportional to the height of the sun and is greatest at noon. The lower amateur-band frequencies (1.8 and 3.5 MHz) are almost completely absorbed by this layer, and only the high-angle radiation is reflected by the *E* layer. (Lower-angle radiation travels farther through the *D* region and is absorbed.)

The second principal layer is the *F* layer, which has a height of about 175 miles at night. At this altitude the air is so thin that recombination of ions and electrons takes place very slowly. The ionization decreases after sundown, reaching a minimum just before sunrise. In the daytime the *F* layer splits into two parts, the F_1 and F_2 layers, with average virtual heights of, respectively, 140 miles and 200 miles. These layers are most highly ionized at about local noon, and merge again at sunset into the *F* layer.

SKY-WAVE PROPAGATION

Wave Angle

The smaller the angle at which a wave leaves the earth, the less the bending required in the ionosphere to bring it back. Also, the smaller the angle the greater the distance between the point where the wave leaves the earth and that at which it returns. This is shown in Fig. 19-4. The vertical angle that the wave makes with a tangent to the earth is called the wave angle or angle of radiation.

Skip Distance

More bending is required to return the wave to earth when the wave angle is high, and at times the bending will not be sufficient unless the wave angle is smaller than some critical value. This is illustrated in Fig. 19-4, where *A* and smaller angles give useful signals while waves sent at higher angles penetrate the layer and are not returned. The distance between *T* and R_1 is, therefore, the shortest possible distance, at that particular frequency, over which communication by ionospheric refraction can be accomplished.

The area between the end of the useful ground wave and the beginning of ionospheric-wave reception is called the skip zone, and the distance from the transmitter to the nearest point where the sky wave returns to earth is called the skip distance. The extent of the skip zone depends upon the frequency and the state of the ionosphere, and also upon the height of the layer in which the refraction takes place. The higher layers give longer skip distances for the same wave angle. Wave angles at the transmitting and receiving points are usually, although not always, approximately the same for any given wave path.

Critical and Maximum Usable Frequencies

If the frequency is low enough, a wave sent vertically to the ionosphere will be reflected back down to the transmitting point. If the frequency is then gradually increased, enventually a frequency will be reached where this vertical reflection just fails to occur. This is the critical frequency for the layer under consideration. When the operating frequency is below the critical value there is no skip zone.

The critical frequency is a useful index to the highest frequency that can be used to transmit over a specified distance – the maximum usable frequency (muf). If the wave leaving the transmitting point at angle *A* in Fig. 19-4 is, for example, at a frequency of 14 MHz, and if a higher frequency would skip over the receiving point R_1, then 14 MHz is the muf for the distance from *T* to R_1.

The greatest possible distance is covered when the wave leaves along the tangent to the earth; that is, at zero wave angle. Under average conditions this distance is about 4000 kilometers or 2500 miles for the F_2 layer, and 2000 km or 1250 miles for the *E* layer. The distances vary with the layer height. Frequencies above these limiting muf's will not be returned to earth at any distance. The 4000-km muf for the F_2 layer is approximately 3 times the critical frequency for that layer, and for the *E* layer the 2000-km muf is about 5 times the critical frequency.

Absorption in the ionosphere is least at the maximum usable frequency, and increases very rapidly as the frequency is lowered below the muf. Consequently, the best results with low power always are secured when the frequency is as close to the muf as possible.

It is readily possible for the ionospheric wave to pass through the *E* layer and be refracted back to earth from the *F*, F_1 or F_2 layers. This is because the critical frequencies are higher in the latter layers, so that a signal too high in frequency to be returned by the *E* layer can still come back from one of the others, depending upon the time of day and the existing conditions.

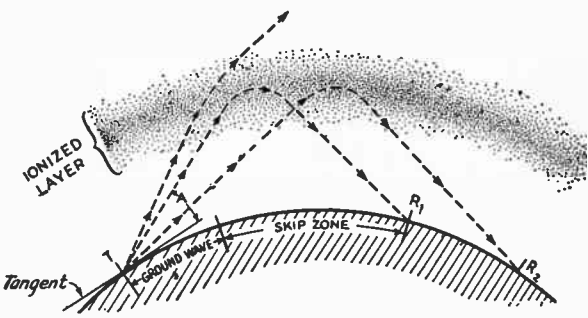

Fig. 19-4 – Refraction of sky waves, showing the critical wave angle and the skip zone. Waves leaving the transmitter at angles above the critical (greater than A) are not bent enough to be returned to earth. As the angle is decreased, the waves return to earth at increasingly greater distances.

Multihop Transmission

On returning to the earth the wave can be reflected upward and travel again to the ionosphere. There it may once more be refracted, and again bent back to earth. This process may be repeated several times. Multihop propagation of this nature is necessary for transmission over great distances because of the limited heights of the layers and the curvature of the earth, which restrict the maximum one-hop distance to the values mentioned in the preceding section. However, ground losses absorb some of the energy from the wave on each reflection (the amount of the loss varying with the type of ground and being least for reflection from sea water), and there is also absorption in the ionosphere at each reflection. Hence the smaller the number of hops the greater the signal strength at the receiver, other things being equal.

Fading

Two or more parts of the wave may follow slightly different paths in traveling to the receiving point, in which case the difference in path lengths will cause a phase difference to exist between the wave components at the receiving antenna. The total field strength will be the sum of the components and may be larger or smaller than one component alone, since the phases may be such as either to aid or oppose. Since the paths change from time to time, this causes a variation in signal strength called fading. Fading can also result from the combination of single-hop and multihop waves, or the combination of a ground wave with an ionospheric or tropospheric wave.

Fading may be either rapid or slow, the former type usually resulting from rapidly-changing conditions in the ionosphere, the latter occurring when transmission conditions are relatively stable. Severe changes in signal strength of 10 to 20 dB or more are called "deep" fades, in contrast to the more normal "shallow" fades of a few dB.

It frequently happens that transmission conditions are different for waves of slightly different frequencies, so that in the case of voice-modulated transmission, involving sidebands differing slightly from the carrier in frequency, the carrier and various sideband components may not be propagated in the same relative amplitudes and phases they had at the transmitter. This effect, known as selective fading, causes severe distortion of the signal. The distortion is most marked on amplitude-modulated signals and at high percentages of modulation; it is possible to reduce the effects considerably by using "exalted-carrier reception" and "single-sideband" techniques that, in effect, reduce the modulation percentage at the receiver.

Back Scatter

Even though the operating frequency is above the muf for a given distance, it is usually possible to hear signals from within the skip zone. This phenomenon, called back scatter, is caused by reflections from distances beyond the skip zone. Such reflections can occur when the transmitted energy strikes the earth at a distance and some of it is reflected back into the skip zone to the receiver. Such scatter signals are weaker than those normally propagated, and also have a rapid fade or "flutter" that makes them easily recognizable.

A certain amount of scattering of the wave also takes place in the ionosphere because the ionized region is not completely uniform. Scattering in the normal propagation direction is called forward scatter, and is responsible for extending the range of transmission beyond the distance of a regular hop, and for making communication possible on frequencies greater than the actual muf.

OTHER FEATURES OF IONOSPHERIC PROPAGATION

Cyclic Variations in the Ionosphere

Since ionization depends upon ultraviolet radiation, conditions in the ionosphere vary with changes in the sun's radiation. In addition to the daily variation, seasonal changes result in higher critical frequencies in the E layer in summer, averaging about 4 MHz as against a winter average of 3 MHz. The F layer critical frequency is of the order of 4 to 5 MHz in the evening. The F_1 layer, which has a critical frequency near 5 MHz in summer, usually disappears entirely in winter. The daytime maximum critical frequencies for the F_2 are highest in winter (10 to 12 MHz) and lowest in summer (around 7 MHz). The virtual height of the F_2 layer, which is about 185 miles in winter, averages 250 miles in summer. These values are representative of latitude 40 deg. North in the Western hemisphere, and are subject to considerable variation in other parts of the world.

Very marked changes in ionization also occur in step with the 11-year sunspot cycle. Although there is no apparent direct correlation between sunspot activity and critical frequencies on a given day, there is a definite correlation between *average* sunspot activity and critical frequencies. The critical frequencies are highest during sunspot maxima and lowest during sunspot minima. During the period of minimum sunspot activity, the lower frequencies – 7 and 3.5 MHz – frequently are the only usable bands at night. At such times the 28-MHz band is seldom useful for long-distance work, while the 14-MHz band performs well in the daytime but is not ordinarily useful at night.

Ionosphere Storms

Certain types of sunspot activity cause considerable disturbances in the ionosphere (ionospheric storms) and are accompanied by disturbances in the earth's magnetic field (magnetic storms). Ionosphere storms are characterized by a marked increase in absorption, so that radio conditions become poor. The critical frequencies also drop to relatively low values during a storm, so that only the lower frequencies are useful for communication. Ionosphere storms may last from a few hours to several days. Since the sun rotates on its axis once every 28 days, disturbances tend to recur at such intervals, if the sunspots responsible

do not become inactive in the meantime. Absorption is usually low, and radio conditions good, just preceding a storm.

Sporadic-*E* Ionization

Scattered patches or clouds of relatively dense ionization occasionally appear at heights approximately the same as that of the *E* layer, for reasons not yet known. This sporadic-*E* ionization is most prevalent in the equatorial regions, where it is substantially continuous. In northern latitudes it is most frequent in the spring and early summer, but is present in some degree a fair percentage of the time the year 'round. It accounts for much of the night-time short distance work on the lower frequencies (3.5 to 7 MHz) and, when more intense, for similar work on 14 to 28 MHz. Exceptionally intense sporadic-*E* ionization permits work over distances exceeding 400 or 500 miles on the 50-MHz band.

There are indications of a relationship between sporadic-*E* ionization and average sunspot activity, but it does not appear to be directly related to daylight and darkness since it may occur at any time of the day. However, there is an apparent tendency for the ionization to peak at mid-morning and in the early evening.

Troposheric Propagation

Changes in temperature and humidity of air masses in the lower atmosphere often permit work over greater than normal ground-wave distances on 28 MHz and higher frequencies. The effect can be observed on 28 MHz but it is generally more marked on 50 and 144 MHz. The subject is treated in detail later.

PREDICTION MAPS

The Institute for Telecommunication Sciences offers ionospheric prediction maps with which it is possible to predict with considerable accuracy the maximum usable frequency that will hold over any path on the earth. The maps and instructions for their use are contained in four volumes, which can be obtained from the Superintendent of Documents, U. S. Government Printing Office, Washington, DC 20402, for $9.30. They are called OT Telecommunications Research and Engineering Report *Ionospheric Predictions*, OT-TRER 13. The use of the maps is explained in Vol. 1, available separately for 30 cents. Vols. 2, 3, and 4, available individually for $3.00 each, contain maps for predicted Zurich smoothed relative sunspot numbers of 10, 110 and 160, respectively. Linear interpolation of data from two volumes must be made for periods of solar activity at intermediate levels. Information on predicted relative sunspot numbers is contained periodically in Propagation Forecast Bulletins, transmitted by W1AW and many Official Bulletin Stations.

Predictions on *E*-layer propagation may be obtained from information included in the above volumes.

PROPAGATION IN THE BANDS BELOW 30 MHZ

The 1.8-MHz or "160-meter" band offers reliable working over ranges up to 25 miles or so during daylight. On winter nights, ranges up to several thousand miles are not impossible. Only small sections of the band are currently available to amateurs, because of the loran (navigation) service in that part of the spectrum.

The 3.5-MHz or "80-meter" band is a more useful band during the night than during the daylight hours. In the daytime, one can seldom hear signals from a distance of greater than 200 miles or so, but during the darkness hours distances up to several thousand miles are not unusual, and transoceanic contacts are regularly made during the winter months. During the summer, the static level is high.

The 7-MHz or "40-meter" band has many of the same characteristics as 3.5, except that the distances that can be covered during the day and night hours are increased. During daylight, distances up to a thousand miles can be covered under good conditions, and during the dawn and dusk periods in winter it is possible to work stations as far as the other side of the world, the signals following the darkness path. The winter months are somewhat better than the summer ones. In general, summer static is much less of a problem than on 80 meters, although it can be series in the simitropical zones.

The 14-MHz or "20-meter" band is probably the best one for long-distance work. During the high portion of the sunspot cycle it is open to some parts of the world during practically all of the 24 hours, while during a sunspot minimum it is generally useful only during daylight hours and the dawn and dusk periods. There is practically always a skip zone on this band.

The 21-MHz or "15-meter" band shows highly variable characteristics depending on the sunspot cycle. During sunspot maxima it is useful for long-distance work during a large part of the 24 hours, but in years of low sunspot activity it is almost wholly a daytime band, and sometimes unusable even in daytime. However, it is often possible to maintain communication over distances up to 1500 miles or more by sporadic-*E* ionization which may occur either day or night at any time in the sunspot cycle.

The 28-MHz or "10-meter" band is generally considered to be a DX band during the daylight hours (except in summer) and good for local work during the hours of darkness, for about half the sunspot cycle. At the very peak of the sunspot cycle, it may be "open" into the late evening hours for DX communication. At the sunspot minimum the band is usually "dead" for long-distance communications, by means of the F_2 layer, in the northern latitudes. Nevertheless, sporadic-*E* propagation is likely to occur at any time, just as in the case of the 21-MHz band.

There will often be exceptions to the general conditions described above, and their observation is a very interesting facet of amateur radio.

THE WORLD ABOVE 50 MHZ

Familiarity with propagation modes is vital to the vhf enthusiast, and exploiting DX opportunities that nature affords has been a challenge since the earliest days of communication on the frequencies above 50 MHz. Much of what is known about long-distance vhf propagation was turned up by amateur pioneering, and more may yet be, for some aspects of vhf DX are still far from completely explained.

NATURE OF THE VHF BANDS

A valuable feature of this vast territory is its usefulness for consistent communication within an essentially local service area. Lower frequencies are subject to varying conditions that impair local communication at least part of the time. Our hf bands are narrow, and often seriously overcrowded. The vhf bands are far wider and capable of much greater occupancy, and their characteristics are ideal for local work.

It was once though that these frequencies would be useful only locally, but increased occupancy and improved techniques demonstrated that there are many forms of long-distance vhf propagation. As a result, vhf activity has developed in isolated areas, as well as those of high population density, until, depending on the skill and resourcefulness of the individual, there are few areas of the world left where interesting and productive vhf work is impossible.

What follows supplements information given earlier in this chapter. First, let us consider the nature of our bands above 50 MHz.

50 to 54 MHz This borderline region has some of the characteristics of adjacent frequencies, both higher and lower. Just about every form of wave propagation is found occasionally in the 50-MHz band, which has contributed greatly to its popularity. However, its utility for service-area communication should not be overlooked. In the absence of any favorable condition, the well-equipped 50-MHz station should be able to work regularly over a radius of 75 to 100 miles or more, depending on terrain, antenna size and height, and operator skill.

Changing weather patterns extend coverage to 300 miles or more at times, mainly in the warmer months. Sporadic-*E* skip provides seasonal openings for work over 400 to 2500 miles, in seasons centered on the longest and shortest days of the year. Auroral effects afford vhf men in the temperate latitudes an intriguing form of DX up to about 1300 miles. During the peak of "11-year" sunspot cycle 50-MHz DX of worldwide proportions may be workable by reflections of waves by the ionospheric F_2 layer. Various weak-signal scatter modes round out the exciting propagation fare available to the 50-MHz operator.

144 to 148 MHz Ionospheric effects are greatly reduced at 144 MHz. *F*-layer propagation is unknown. Sporadic-*E* skip is rare, and much more limited in duration and coverage than on 50 MHz. Auroral propagation is quite similar to that on 50 MHz, except that signals tend to be somewhat weaker and more distorted at 144. Tropospheric propagation improves with increasing frequency. It has been responsible for 144-MHz work over distances up to 2500 miles, and 500-mile contacts are fairly common in the warmer months. Reliable range on 144 is slightly less than on 50, under minimum conditions.

220 MHz and Higher Ionospheric propagation of the sorts discussed above is virtually unknown above about 200 MHz. Auroral communication is possible on 220 and 420 MHz, but probably not on higher frequencies, with amateur power levels. Tropospheric bending is very marked, and may be better on 432 than on 144 MHz, for example. Communication has been carried on over paths far beyond line of sight, on all amateur frequencies up through 10,000 MHz. Under minimum conditions, signal levels drop off slightly with each higher band.

PROPAGATION MODES

Known means by which vhf signals are propagated beyond the horizon are described below.

F_2-Layer Reflection Most communication on lower frequencies is by reflection of the wave in the *F* region, highest of the ionized layers. Its density varies with solar activity, the maximum usable frequency (muf) being highest in peak years of the sunspot cycle. These cycles vary, and indications are that we are now in a down trend. Cycle 19 (in the recorded history of sunspot activity) hit an all-time high in the fall of 1958, which may never be equalled within the lifetime of most of us. Cycle 20 produced some 50-MHz F_2 DX in 1968 to 1970, but less than Cycle 18 (1946 to 1949), and far less than Cycle 19.

The muf for F_2-layer propagation follows other well-defined cycles: daily, monthly and seasonal, all related to conditions on the sun and its position with respect to the earth. The F_2 muf is quite easily determined if one has a continuous-tuning receiver for about 14 to 50 MHz. These frequencies are in almost continuous worldwide use, so signals are likely to be heard up to the highest frequency being propagated at the time of observation. Frequent checks will show if the muf is rising or falling, and the times and directions for which it is highest. Monthly peaks follow a 27-day cycle, coinciding with the turning of the sun on its axis. Spring and fall show the highest muf, with a slight drop in winter and a major one in summer.[1]

Communications range via the F_2 layer on 50 MHz is comparable to that on 28, but the minimum distance is greater. Two-way work has been done over about 1800 to 12,500 miles; even greater, if daylight routes around the earth the long way are included. The muf is believed to have reached about 70 MHz in 1958.

The TE Mode Also associated with high solar activity is a transequatorial mode, having an muf

[1] For this and following references, see bibliography at the end of this chapter.

somewhat higher than the F_2. This is observed most often between points up to 2500 miles north and south of the *geomagnetic* equator, mainly in late afternoon or early evening. A classic amateur discovery, pioneering of the TE mode is a fascinating story.[2]

Sporadic-E Skip Patchy ionization of the *E* region of the ionosphere often propagates 28- and 50-MHz signals over 400 to 1300 miles or more. Often called "short skip," this is most common in May, June and July, with a shorter season around year end. Seasons are reversed in the southern hemisphere. *E* skip can occur at any time or season, but is most likely in mid-morning or early evening. Multiple-hop effects may extend the range to 2500 miles or more.

The upper frequency limit for E_s propagation is unknown, but it has been observed in the 144-MHz band, and on TV channels up to about 200 MHz. Minimum skip distance is greater, and duration of openings much shorter, on 144 MHz than on 50. Reception of strong E_s signals from under 300 miles on 50 MHz indicates some possibility of skip propagation on 144, probably to 800 miles or more.[3]

Aurora Effect High-frequency communication may be wiped out or seriously impaired by absorption in the ionosphere, during disturbances associated with high solar activity and variations in the earth's magnetic field. If this occurs at night in clear weather, there may be a visible aurora, but the condition also develops in daylight, usually in late afternoon. Weak wavery signals in the 3.5-MHz band, or from the 5-MHz WWV, are good indicators.

Vhf waves can be returned to earth from the auroral region, but the varying intensity of the aurora and its porosity as a propagation medium impart a multipath distortion to the signal, which garbles or even destroys any modulation. Distortion increases with signal frequency and varies, often quite quickly, with the nature of the aurora. In general, 50-MHz signals have less auroral distortion than those on higher frequencies, and voice is usable more often on 50 than on 144 MHz. Single-sideband is preferred to modes requiring more bandwidth. The most effective mode is cw, which may be the only reliable communications method at 144 MHz and higher, during most auroras.

Propagation is generally from the north, regardless of the direct path between communicating stations, but probing with a directional array is recommended. Maximum range is about 1300 miles, though 50-MHz signals are heard occasionally over greater distances, usually with little or no auroral distortion.

How often auroral communication is possible is related to the *geomagnetic* latitude of participating stations, auroras being most frequent in northeastern USA and adjacent areas of Canada. They are rare below about latitude 32 in the Southeast and about latitude 38 to 40 in the Southwest. The highest frequency for auroral returns depends on equipment and antennas, but auroral communication has been achieved by amateurs up to at least 432 MHz.[4]

Tropospheric Bending An easily-anticipated extension of normal vhf coverage results from abrupt changes in the refractive index of the atmosphere, at boundaries between air masses of differing temperature and humidity characteristics. Such warm-dry over cool-moist boundaries often lie along the southern and western edges of stable slow-moving areas of fair weather and high barometric pressure. Troposheric bending can increase signal levels from within the normal working range, or bring in more distant stations, not normally heard.

A condition known as *ducting* or *trapping* may simulate propagation within a waveguide, causing vhf waves to follow earth curvature for hundreds or even thousands of miles. Ducting incidence increases with frequency. It is rare on 50 MHz, fairly common on 144, and more so on higher frequencies. It occurs most often in temperate or low latitudes. It was the medium for such memorable vhf DX as the W6NLZ-KH6UK work on 144, 220 and 432 MHz, over a 2540-mile path.[5] Gulf-Coast states see it often, the Atlantic Seaboard, Great Lakes and Mississippi Valley areas occasionally, usually in September and October.

Many local conditions contribute to tropospheric bending. Convection in coastal areas in warm weather; rapid cooling of the earth after a hot day, with upper air cooling more slowly; warming of air aloft with the summer sunrise; subsidence of cool moist air into valleys on calm summer evenings – these familiar situations create upper-air conditions similar to those shown in Fig. 19-5, which can extend normal vhf coverage.

The alert vhf enthusiast soon learns to correlate various weather signs and propagation patterns. Temperature and barometric-pressure trends, changing cloud formations, wind direction, visibility and other natural indicators can give him clues as to what is in store in the way of tropospheric propagation. Radio and TV weather programs may help in this.[6]

The 50-MHz band is more responsive to weather effects than 28, and 144 MHz is much more active than 50. This trend continues into the microwave region, as evidenced by tropospheric records on all our bands, up to and including work over a 275-mile path on 10,000 MHz.

The Scatter Modes Though they provide signal levels too low for routine communication, several marginal modes attract the advanced vhf operator. They are lumped under the term "scatter," implying an incidental by-product of some stronger-signal mode, but they are of real interest on their own.

Tropospheric scatter offers marginal communication up to 500 miles or so, almost regardless of conditions and frequency, when optimum equipment and methods are used.[7]

Ionospheric scatter is useful mainly on 50 MHz, where it usually is a composite of meteor bursts and a weak residual scatter signal. The latter may be heard only when optimum conditions prevail. The best distances are 600 to 1200 miles.[8]

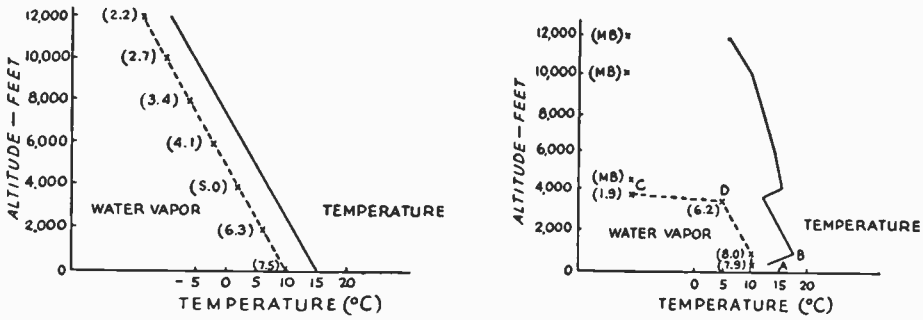

Fig. 19-5 — Upper-air conditions that produce extended-range vhf propagation. In the U.S. Standard Atmosphere curve, left, the humidity curve (dotted) is that which would result if the relative humidity were 70 percent from the ground level to 12,000 feet, resulting in only slight refraction. At the right is shown a sounding that is typical of marked refraction of vhf waves. Figures in parentheses are the "mixing ratio" — grams of water vapor per kilogram of dry air. Note the sharp break in both curves at about 4000 feet. From Collier, "Upper-air conditions for 2-Meter DX," *QST*, September, 1955.

Back scatter, common on lower frequencies, is observed on 50 MHz during ionospheric propagation, mainly of the F_2 variety. Signals are usually weak, with a fast flutter. Distance may be anything up to normal for mode in use. Because it peaks in directions of highest ionization density, F_2 back scatter is helpful in determining when, and in what directions, the band is open, especially in aiming toward areas of the world where 50-MHz activity is low or nonexistent.

Scatter from meteor trails in the *E* region can cause signal enhancement, or isolated bursts of signal from a station not otherwise heard. Exploitation of this medium for quick information exchanges poses an exciting challenge to the skilled vhf operator. Strength and duration of meteor bursts decrease with increasing signal frequency, but the mode is popular for marginal communication in the 50- and 144-MHz bands. It has been used on 220 MHz, and optimum equipment and large antennas have yielded bursts long enough for identification at 432 MHz.

Random meteor bursts can be heard by cooperating vhf stations at any time or season, but early-morning hours are preferred. Major meteor showers (August Perseids and December Geminids) provide frequent bursts. Some other showers have various periods, and may show phenomenal burst counts in peak years.[9]

Few meteor bursts on 144 MHz are more than a few seconds long, and some are mere "pings" of signal. Long bursts, or several superimposed, may yield continuous signal for a minute or more, but these are rare, except during major showers. A "shower of the century," such as the Leonids of November 1966 and 1967, may provide almost continuous propagation on 50 or 144 MHz for several hours. Otherwise, brief precisely-timed transmitting sequences and agreed-upon reporting methods are necessary for information exchange. Distances are similar to other *E*-layer communication.

All scatter communication requires good equipment and optimum operating methods. The narrow-band modes are superior to wide-band systems. Single sideband is being used more effectively all the time, but cw remains supreme for all weak-signal vhf work. Some redundance is nearly always helpful, regardless of mode.

Communication Via the Moon Though amateurs first bounced signals off the moon in the early 1950s,[10] real communication via the earth-moon-earth (eme) route is a fairly recent accomplishment. Requirements are maximum legal power, optimum receiving equipment, very large high-gain antennas, and precise aiming. Sophisticated tracking systems, narrow bandwidth (with attendant requirements for receiver and transmitter stability) and visual signal-resolution methods are desirable. Lunar work has been done on all amateur frequencies from 144 to 2300 MHz, over distances limited only by the ability of the stations to "see" the moon simultaneously.

VHF Propagation Footnotes

Propagation modes are discussed in more detail in Chapter 2 of *The Radio Amateur's VHF Manual*, and in *QST* references given below.

1 Heightman, "Any DX Today?" January, 1948.
2 Cracknell "Transequatorial Propagation of VHF Signals," December, 1959. "More on TE Propagation," August 1947, p. 47. Whiting, "How TE Works" April, 1963.
3 Ennis, "Working 2-Meter *E*-Layer DX," June, 1957. Also, "World Above 50 MHz," August, 1968, p. 84.
4 Moore, "Aurora and Magnetic Storms," June, 1951. Dyce, "More About Auroral Propagation," January, 1955. Mellen, Milner and Williams, "Hams on Ice," January, 1960.
5 September, 1957, p. 68, August, 1959, p. 68, September, 1960, p. 78.
6 Botts "A Night To Remember," January, 1970.
7 Moore, "Over The Hills and Far Away," February, 1951.
8 Moynahan, "VHF Scatter Propagation," March, 1956.
9 Bain, "VHF Meteor Scatter Propagation," April, 1957. Table of meteor showers, *VHF Manual*, p. 23.
10 "Lunar DX on 144 MHz," March, 1953.

Transmission Lines

The place where rf power is generated is very frequently not the place where it is to be utilized. A transmitter and its antenna are a good example: The antenna, to radiate well, should be high above the ground and should be kept clear of trees, buildings and other objects that might absorb energy, but the transmitter itself is most conveniently installed indoors where it is readily accessible.

The means by which power is transported from point to point is the rf transmission line. At radio frequencies a transmission line exhibits entirely different characterisitcs than it does at commercial power frequencies. This is because the speed at which electrical energy travels, while tremendously high as compared with mechanical motion, is not infinite. The peculiarities of rf transmission lines result from the fact that a time interval comparable with an rf cycle must elapse before energy leaving one point in the circuit can reach another just a short distance away.

OPERATING PRINCIPLES

If a source of emf – a battery, for example – is connected to the ends of a pair of insulated parallel wires that extend outward for an infinite distance, electric currents will immediately become detectable in the wires near the battery terminals. The electric field of the battery will cause free electrons in the wire connected to the positive terminal to be attracted to the battery, and an equal number of free electrons in the wire connected to the negative terminal will be repelled from the battery. These currents do not flow instantaneously throughout the length of the wires; the electric field that causes the electron movement cannot travel faster than the speed of light, so a measurable interval of time elapses before the currents become evident even a relatively short distance away.

For example, the currents would not become detectable 300 meters (nearly 1000 feet) from the battery until at least a microsecond (one millionth of a second) after the connection was made. By ordinary standards this is a very short length of time, but in terms of radio frequency it represents the time one complete cycle of a 1000-kilohertz current – a frequency considerably lower than those with which amateurs communicate.

The current flows to charge the capacitance between the two wires. However, the conductors of this "linear" capacitor also have appreciable inductance. The line may be thought of as being composed of a whole series of small inductances and capacitances connected as shown in Fig. 20-1, where each coil is the inductance of a very short section of one wire and each capacitor is the capacitance between two such short sections.

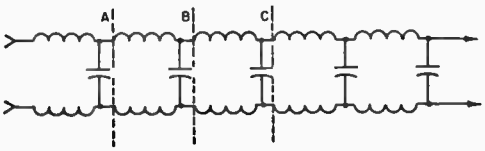

Fig. 20-1 – Equivalent of a transmission line in lumped circuit constants.

Characteristic Impedance

An infinitely long chain of coils and capacitors connected as in Fig. 20-1, where the small inductances and capacitances all have the same values, respectively, has an important property. To an electrical impulse applied at one end, the combination appears to have an impedance – called the characteristic impedance or surge impedance – approximately equal to $\sqrt{L/C}$ where L and C are the inductance and capacitance per unit length. This impedance is purely resistive.

In defining the characteristic impedance as $\sqrt{L/C}$, it is assumed that the conductors have no inherent resistance – that is, there is no I^2R loss in them – and that there is no power loss in the dielectric surrounding the conductors. There is thus no power loss in or from the line no matter how great its length. This may not seem consistent with calling the characteristic impedance a pure resistance, which implies that the power supplied is all dissipated in the line. But in an infinitely long line the effect, so far as the source of power is concerned, is exactly the same as though the power were dissipated in a resistance, because the power leaves the source and travels outward forever along the line.

The characteristic impedance determines the amount of current that can flow when a given voltage is applied to an infinitely long line, in

exactly the same way that a definite value of actual resistance limits current flow when a voltage is applied.

The inductance and capacitance per unit length of line depend upon the size of the conductors and the spacing between them. The closer the two conductors and the greater their diameter, the higher the capacitance and the lower the inductance. A line with large conductors closely spaced will have low impedance, while one with small conductors widely spaced will have relatively high impedance.

"Matched" Lines

Actual transmission lines do not extend to infinity but have a definite length and are connected to, or terminate in, a load at the "output" end, or end to which the power is delivered. If the load is a pure resistance of a value equal to the characteristic impedance of the line, the line is said to be matched. To current traveling along the line such a load just looks like still more transmission line of the same characteristic impedance.

In other words, a short line terminated in a purely resistive load equal to the characteristic impedance of the line acts just as though it were infinitely long. In a matched transmission line, power travels outward along the line from the source until it reaches the load, where it is completely absorbed.

RF on Lines

The principles discussed above, although based on direct-current flow from a battery, also hold when an rf voltage is applied to the line. The difference is that the alternating voltage causes the amplitude of the current at the input terminals of the line to vary with the voltage, and the direction of current flow also periodically reverses when the polarity of the applied voltage reverses. The current at a given instant at any point along the line is the result of a voltage that was applied at some *earlier* instant at the input terminals. Since the distance traveled by the electromagnetic fields in the time of one cycle is equal to one wavelength, the instantaneous amplitude of the current is different at all points in a one-wavelength section of line. In fact, the current flows in opposite directions in the same wire in successive half-wavelength sections. However, at any given point along the line the current goes through similar variations with time that the current at the input terminals did.

Thus the current (and voltage) travels along the wire as a series of waves having a length equal to the speed of travel divided by the frequency of the ac voltage. On an infinitely long line, or one properly matched by its load, an ammeter inserted anywhere in the line will show the same current, because the ammeter averages out the variations in current during a cycle. It is only when the line is not properly matched that the wave motion becomes apparent through observations made with ordinary instruments.

STANDING WAVES

In the infinitely long line (or its matched counterpart) the impedance is the same at any point on the line because the ratio of voltage to current is always the same. However, the impedance at the end of the line in Fig. 20-2 is zero – or at least extremely small – because the line is short-circuited at the end. The outgoing power, on meeting the short-circuit, reverses its direction of flow and goes back along the transmission line toward the input end. There is a large current in the short-circuit, but substantially no voltage across the line at this point. We now have a voltage and current representing the power going outward (incident power) toward the short-circuit, and a second voltage and current representing the reflected power traveling back toward the source.

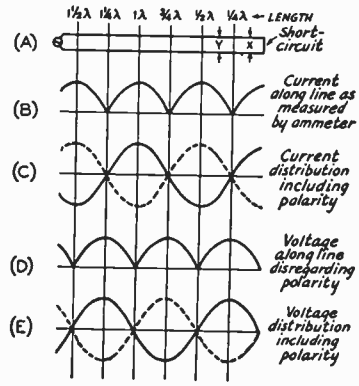

Fig. 20-2 – Standing waves of voltage and current along a short-circuited transmission line.

The reflected current travels at the same speed as the outgoing current, so its instantaneous value will be different at every point along the line, in the distance represented by the time of one cycle. At some points along the line the phase of the incident and reflected currents will be such that the currents cancel each other while at others the amplitude will be doubled. At in-between points the amplitude is between these two extremes. The points at which the currents are in and out of phase depend only on the *time* required for them to travel and so depend only on the *distance* along the line from the point of reflection.

In the short-circuit at the end of the line the two current components are in phase and the total current is large. At a distance of one-half wavelength back along the line from the short-circuit the outgoing and reflected components will again be in phase and the resultant current will again have its maximum value. This is also true at any point that is a multiple of a half wavelength from the short-circuited end of the line.

The outgoing and reflected currents will cancel at a point one-quarter wavelength, along the line, from the short-circuit. At this point, then, the

current will be zero. It will also be zero at all points that are an *odd* multiple of one-quarter wavelength from the short-circuit.

If the current along the line is measured at successive points with an ammeter, it will be found to vary about as shown in Fig. 20-2B. The same result would be obtained by measuring the current in either wire, since the ammeter cannot measure phase. However, if the phase could be checked, it would be found that in each successive half-wavelength section of the line the currents at any given instant are flowing in opposite directions, as indicated by the solid line in Fig. 20-2C. Furthermore, the current in the second wire is flowing in the opposite direction to the current in the adjacent section of the first wire. This is indicated by the broken curve in Fig. 20-2C. The variations in current intensity along the transmission line are referred to as standing waves. The point of maximum line current is called a current loop or current antinode and the point of minimum line current is called a current node.

Voltage Relationships

Since the end of the line is short-circuited, the voltage at that point has to be zero. This can only be so if the voltage in the outgoing wave is met, at the end of the line, by a reflected voltage of equal amplitude and opposite polarity. In other words, the phase of the voltage wave is *reversed* when reflection takes place from the short-circuit. This reversal is equivalent to an extra half cycle or half wavelength of travel. As a result, the outgoing and returning voltages are in phase a quarter wavelength from the end of the line, and again out of phase a half wavelength from the end. The standing waves of voltage, shown at D in Fig. 20-2, are therefore displaced by one-quarter wavelength from the standing waves of current. The drawing at E shows the voltage on both wires when phase is taken into account. The polarity of the voltage on each wire reverses in each half wavelength section of transmission line. A voltage maximum is called a voltage loop or antinode and a voltage minimum is called a voltage node.

Open-Circuited Line

If the end of the line is open-circuited instead of short-circuited, there can be no current at the end of the line but a large voltage can exist. Again the incident power is reflected back toward the source. The incident and reflected components of current must be equal and opposite in phase at the open circuit in order for the total current at the end of the line to be zero. The incident and reflected components of voltage are in phase and add together. The result is again that there are standing waves, but the conditions are reversed as compared with a short-circuited line. Fig. 20-3 shows the open-circuited line case.

Lines Terminated in Resistive Load

Fig. 20-4 shows a line terminated in a resistive load. In this case at least part of the incident power is absorbed in the load, and so is not available to be

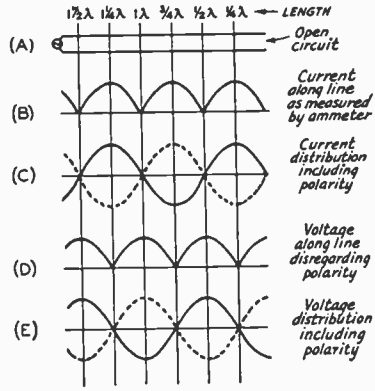

Fig. 20-3 — Standing waves of current and voltage along an open-circuited transmission line.

reflected back toward the source. Because only part of the power is reflected, the reflected components of voltage and current do not have the same magnitude as the incident components. Therefore neither voltage nor current cancel completely at any point along the line. However, the *speed* at which the incident and reflected components travel is not affected by their amplitude, so the phase relationships are similar to those in open- or short-circuited lines.

It was pointed out earlier that if the load resistance, Z_R, is equal to the characteristic impedance, Z_0, of the line all the power is absorbed in the load. In such a case there is no reflected power and therefore no standing waves of current and voltage. This is a special case that represents the change-over point between "short-circuited" and "open-circuited" lines. If Z_R is less than Z_0, the current is largest at the load, while if Z_R is greater than Z_0 the voltage is largest at the load. The two conditions are shown at B and C, respectively, in Fig. 20-4.

The resistive termination is an important practical case. The termination is seldom an actual resistor, the most common terminations being resonant circuits or resonant antenna systems, both of which have essentially resistive impedances. If the load is reactive as well as resistive, the operation of the line resembles that shown in Fig.

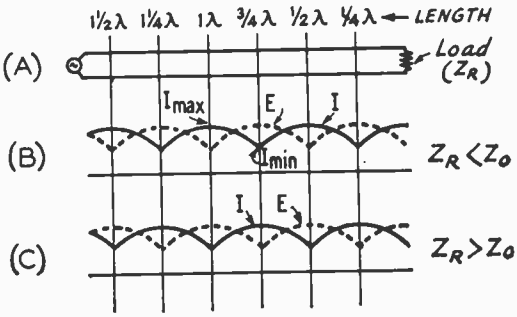

Fig. 20-4 — Standing waves on a transmission line terminated in a resistive load.

20-4, but the presence of reactance in the load causes two modifications: The loops and nulls are shifted toward or away from the load; and the amount of power reflected back toward the source is increased, as compared with the amount reflected by a purely resistive load of the same total impedance. Both effects become more pronounced as the ratio of reactance to resistance in the load is made larger.

Standing-Wave Ratio

The ratio of maximum current to minimum current along a line, Fig. 20-5, is called the standing-wave ratio. The same ratio holds for maximum voltage and minimum voltage. It is a measure of the mismatch between the load and the line, and is equal to 1 when the line is perfectly matched. (In that case the "maximum" and "minimum" are the same, since the current and voltage do not vary along the line.) When the line is terminated in a purely resistive load, the standing-wave ratio is

$$\text{SWR} = \frac{Z_R}{Z_0} \text{ or } \frac{Z_0}{Z_R} \qquad \text{(20-A)}$$

where SWR = Stand-wave ratio
Z_R = Impedance of load (pure resistance)
Z_0 = Characteristic impedance of line

Example: A line having a characteristic impedance of 300 ohms is terminated in a resistive load of 25 ohms. The SWR is

$$\text{SWR} = \frac{Z_0}{Z_R} = \frac{300}{25} = 12 \text{ to } 1$$

It is customary to put the larger of the two quantities, Z_R or Z_0, in the numerator of the fraction so that the SWR will be expressed by a number larger than 1.

It is easier to measure the standing-wave ratio than some of the other quantities (such as the impedance of an antenna) that enter into transmission-line computations. Consequently, the SWR is a convenient basis for work with lines. The higher the SWR the greater the mismatch between line and load. In practical lines, the power loss in the line itself increases with the SWR as shown later.

INPUT IMPEDANCE

The input impedance of a transmission line is the impedance seen looking into the sending-end or input terminals; it is the impedance into which the source of power must work when the line is connected. If the load is perfectly matched to the line the line appears to be infinitely long, as stated earlier, and the input impedance is simply the characteristic impedance of the line itself. However, if there are standing waves this is no longer true; the input impedance may have a wide range of values.

This can be understood by referring to Figs. 20-2, 20-3, or 20-4. If the line length is such that standing waves cause the voltage at the input terminals to be high and the current low, then the input impedance is higher than the Z_0 of the line, since impedance is simply the ratio of voltage to current. Conversely, low voltage and high current at the input terminals mean that the input impedance is lower than the line Z_0. Comparison of the three drawings also shows that the range of input impedance values that may be encountered is greater when the far end of the line is open- or short-circuited than it is when the line has a resistive load. In other words, the higher the SWR the greater the range of input impedance values when the line length is varied.

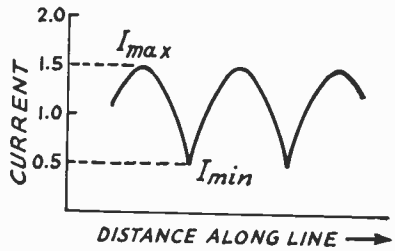

Fig. 20-5 — Measurement of standing-wave ratio. In this drawing, I_{max} is 1.5 and I_{min} is 0.5, so the SWR = Imax/Imin = .5/0.5 = 3 to 1.

In addition to the variation in the absolute value of the input impedance with line length, the presence of standing waves also causes the input impedance to contain both reactance and resistance, even though the load itself may be a pure resistance. The only exceptions to this occur at the exact current loops or nodes, at which points the input impedance is a pure resistance. These are the only points at which the outgoing and reflected voltages and currents are exactly in phase: At all other distances along the line the current either leads or lags the voltage and the effect is exactly the same as though a capacitance or inductance were part of the input impedance.

The input impedance can be represented either by a resistance and a capacitance or by a resistance and an inductance. Whether the impedance is inductive or capacitive depends on the characteristics of the load and the length of the line. It is possible to represent the input impedance by an equivalent circuit having resistance and reactance either in series or parallel, so long as the total impedance and phase angle are the same in either case.

The magnitude and character of the input impedance are quite important, since they determine the method by which the power source must be coupled to the line. The calculation of input impedance is rather complicated and its measurement is not feasible without special equipment. Fortunately, in amateur work it is unnecessary either to calculate or measure it. The proper coupling can be achieved by relatively simple methods described later in this chapter.

Lines Without Load

The input impedance of a short-circuited or open-circuited line not an extact multiple of one-quarter wavelength long is practically a pure reactance. This is because there is very little power lost in the line. Such lines are frequently used as "linear" inductances and capacitances.

If a shorted line is less than a quarter-wave long, as at X in Fig. 20-2, it will have inductive reactance. The reactance increases with the line length up to the quarter-wave point. Beyond that, as at Y, the reactance is capacitive, high near the quarter-wave point and becoming lower as the half-wave point is approached. It then alternates between inductive and capacitive in successive quarter-wave sections. Just the reverse is true of the open-circuited line.

At exact multiples of a quarter wavelength the impedance is purely resistive. It is apparent, from examination of B and D in Fig. 20-2, that at points that are a multiple of a half wavelength – i.e., 1/2, 1, 1 1/2 wavelengths, etc. – from the short-circuited end of the line that the current and voltage have the same values that they do at the short circuit. In other words, if the line were an exact multiple of a half wavelength long the generator or source of power would "look into" a short circuit. On the other hand, at points that are an odd multiple of a quarter wavelength – i.e., 1/4, 3/4, 1 1/4, etc. – from the short circuit the voltage is maximum and the current is zero. Since $Z = E/I$, the impedance at these points is theoretically infinite. (Actually it is very high, but not infinite. This is because the current does not actually go to zero when there are losses in the line. Losses are always present, but usually are small.)

Impedance Transformation

The fact that the input impedance of a line depends on the SWR and line length can be used to advantage when it is necessary to transform a given impedance into another value.

Study of Fig. 20-4 will show that, just as in the open- and short-circuited cases, if the line is one-half wavelength long the voltage and current are exactly the same at the input terminals as they are at the load. This is also true of lengths that are integral multiples of a half wavelength. It is also true for all values of SWR. Hence the input impedance of any line, no matter what its Z_0, that is a multiple of a half wavelength long is exactly the same as the load impedance. Such a line can be used to transfer the impedance to a new location without changing its value.

When the line is a quarter wavelength long, or an odd multiple of a quarter wavelength, the load impedance is "inverted." That is, if the current is low and the voltage is high at the load, the input impedance will be such as to require high current and low voltage. The relationship between the load impedance and input impedance is given by

$$Z_S = \frac{Z_0^2}{Z_R} \qquad \text{(20-B)}$$

where Z_S = Impedance looking into line (line length and odd multiple of one-quarter wavelength
Z_R = Impedance of load (pure resistance)
Z_0 = Characteristic impedance of line

Example: A quarter-wavelength line having a characteristic impedance of 500 ohms is terminated in a resistive load of 75 ohms. The impedance looking into the input or sending end of the line is

$$Z_S = \frac{Z_0^2}{Z_R} = \frac{(500)^2}{75} = \frac{250{,}000}{75} = 3333 \text{ ohms}$$

If the formula above is rearranged, we have

$$Z_0 = \sqrt{Z_S Z_R} \qquad \text{(20-C)}$$

This means that if we have two values of impedance that we wish to "match," we can do so if we connect them together by a quarter-wave transmission line having a characteristic impedance equal to the square root of their product. A quarter-wave line, in other words, has the characteristics of a transformer.

Resonant and Nonresonant Lines

The input impedance of a line operating with a high SWR is critically dependent on the line length, and resistive only when the length is some integral multiple of one-quarter wavelength. Lines cut to such a length and operated with a high SWR are called "tuned" or "resonant" lines. On the other hand, if the SWR is low the input impedance is close to the Z_0 of the line and does not vary a great deal with the line length. Such lines are called "flat," or "untuned," or "nonresonant."

There is no sharp line of demarcation between tuned and untuned lines. If the SWR is below 1.5 to 1 the line is essentially flat, and the same input coupling method will work with all line lengths. If the SWR is above 3 or 4 to 1 the type of coupling system, and its adjustment, will depend on the line length and such lines fall into the "tuned" category.

It is usually advantageous to make the SWR as low as possible. A resonant line becomes necessary only when a considerable mismatch between the load and the line has to be tolerated. The most important practical example of this is when a single antenna is operated on several harmonically related frequencies, in which case the antenna impedance will have widely different values on different harmonics.

RADIATION

Whenever a wire carries alternating current the electromagnetic fields travel away into space with the velocity of light. At power-line frequencies the field that "grows" when the current is increasing has plenty of time to return or "collapse" about the conductor when the current is decreasing, because the alternations are so slow. But at radio frequencies fields that travel only a relatively short distance do not have time to get back to the

conductor before the next cycle commences. The consequence is that some of the electromagnetic energy is prevented from being restored to the conductor; in other words, energy is radiated into space in the form of electromagnetic waves.

The lines previously considered have consisted of two parallel conductors of the same diameter. Provided there is nothing in the system to destroy symmetry, at every point along the line the current in one conductor has the same intensity as the current in the other conductor at that point, but the currents flow in opposite directions. This was shown in Figs. 20-2C and 20-3C. It means that the fields set up about the two wires have the same intensity, but *opposite directions.* The consequence is that the total field set up about such a transmission line is zero; the two fields "cancel out." Hence no energy is radiated.

Practically, the fields do not quite cancel out because for them to do so the two conductors would have to occupy the same space, whereas they are actually slightly separated. However, the cancellation is substantially complete if the distance between the conductors is very small compared to the wavelength. Transmission line radiation will be negligible if the distance between the conductors is .01 wavelength or less, provided the currents in the two wires are balanced.

The amount of radiation also is proportional to the current flowing in the line. Because of the way in which the current varies along the line when there are standing waves, the effective current, for purposes of radiation, becomes greater as the SWR is increased. For this reason the radiation is least when the line is flat. However, if the conductor spacing is small and the currents are balanced, the radiation from a line with even a high SWR is inconsequential. A small unbalance in the line currents is far more serious – and is just as serious when the line is flat as when the SWR is high.

PRACTICAL LINE CHARACTERISTICS

The foregoing discussion of transmission lines has been based on a line consisting of two parallel conductors. The parallel-conductor line is but one of two general types, the other being the coaxial or concentric line. The coaxial line consists of a conductor placed in the center of a tube. The inside surface of the tube and the outside surface of the smaller inner conductor form the two conducting surfaces of the line.

In the coaxial line the fields are entirely inside the tube, because the tube acts as a shield to prevent them for appearing outside. This reduces radiation to the vanishing point. So far as the electrical behavior of coaxial lines is concerned, all that has previously been said about the operation of parallel-conductor lines applies. There are, however, practical differences in the construction and use of parallel and coaxial lines.

PARALLEL-CONDUCTOR LINES

A type of parallel-conductor line sometimes used in amateur installations is one in which two wires (ordinarily No. 12 or No. 14) are supported a fixed distance apart by means of insulating rods called "spacers." The spacings used vary from two to six inches, the smaller spacings being necessary at frequencies of the order of 28 MHz and higher so that radiation will be minimized. The construction is shown in Fig. 20-6. Such a line is said to be air insulated. The characteristic impedance of such "open-wire" lines is between 400 and 600 ohms, depending on the wire size and spacing.

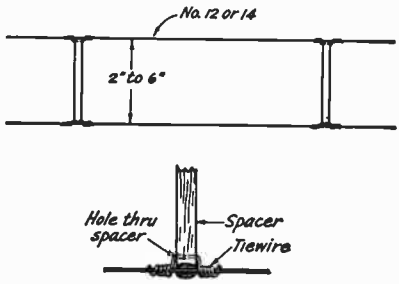

Fig. 20-6 – Typical construction of open-wire line. The line conductor fits in a groove in the end of the spacer, and is held in place by a tie-wire anchored in a hole near the groove.

Parallel-conductor lines also are occasionally constructed of metal tubing of a diameter of 1/4 to 1/2 inch. This reduces the characteristic impedance of the line. Such lines are mostly used as quarter-wave transformers, when different values of impedance are to be matched.

Prefabricated parallel-conductor line with air insulation, developed for television reception, can be used in transmitting applications. This line consists of two conductors separated one-half to one inch by molded-on spacers. The characterstic impedance is 300 to 450 ohms, depending on the wire size and spacing.

A convenient type of manufactured line is one in which the parallel conductors are imbedded in low-loss insulating material (polyethylene). It is commonly used as a TV lead-in and has a characteristic impedance of about 300 ohms. It is sold under various names, the most common of which is "Twin-Lead." This type of line has the advantages of light weight, close and uniform conductor spacing, flexibility and neat appearance. However, the losses in the solid dielectric are higher than in air, and dirt or moisture on the line tends to change the characteristic impedance. Moisture effects can be reduced by coating the line with silicone grease. A special form of 300-ohm Twin-Lead for transmitting uses a polyethylene tube with the conductors molded diametrically

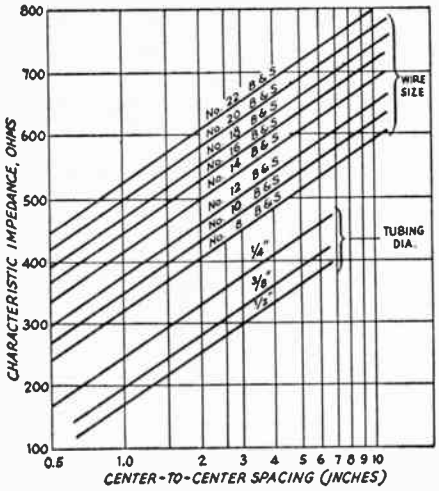

Fig. 20-7 — Chart showing the characteristic impedance of spaced-conductor parallel transmission lines with air dielectric. Tubing sizes given are for outside diameters.

opposite; the longer dielectric path in such line reduces moisture troubles.

In addition to 300-ohm line, Twin-Lead is obtainable with a characteristic impedance of 75 ohms for transmitting purposes. Light-weight 75- and 150-ohm Twin-Lead also is available.

Characteristic Impedance

The characteristic impedance of an air-insulated parallel-conductor line is given by:

$$Z_0 = 276 \log \frac{b}{a} \qquad \text{(20-D)}$$

where Z_0 = Characteristic impedance
b = Center-to-center distance between conductors
a = Radius of conductor (in same units as b)

It does not matter what units are used for a and b so long as they are the *same* units. Both quantities may be measured in centimeters, inches, etc. Since it is necessary to have a table of common logarithms to solve practical problems, the solution is given in graphical form in Fig. 20-7 for a number of common conductor sizes.

In solid-dielectric parallel-conductor lines such as Twin-Lead the characteristic impedance cannot be calculated readily, because part of the electric field is in air as well as in the dielectric.

Unbalance in Parallel-Conductor Lines

When installing parallel-conductor lines care should be taken to avoid introducing electrical unbalance into the system. If for some reason the current in one conductor is higher than in the other, or if the currents in the two wires are not exactly out of phase with each other, the electromagnetic fields will not cancel completely and a considerable amount of power may be radiated by the line.

Maintaining good line balance requires, first of all, a balanced load at its end. For this reason the antenna should be fed, whenever possible, at a point where each conductor "sees" exactly the same thing. Usually this means that the antenna system should be fed at its electrical center. However, even though the antenna appears to be symmetrical physically, it can be unbalanced electrically if the part connected to one of the line conductors is coupled to something (such as house wiring or a metal pole or roof) that is not duplicated on the other part of the antenna. Every effort should be made to keep the antenna as far as possible from other wiring or sizable metallic objects. The transmission line itself will cause some unbalance if it is not brought away from the antenna at right angles to it for a distance of at least a quarter wavelength.

In installing the line conductors take care to see that they are kept away from metal. The minimum separation between either conductor and all other wiring should be at least four or five times the conductor spacing. The shunt capacitance introduced by close proximity to metallic objects can drain off enough current (to ground) to unbalance the line currents, resulting in increased radiation. A shunt capacitance of this sort also constitutes a reactive load on the line, causing an impedance "bump" that will prevent making the line actually flat.

COAXIAL LINES

The most common form of coaxial line consists of either a solid or stranded-wire inner conductor surrounded by polyethylene dielectric. Copper braid is woven over the dielectric to form the outer conductor, and a waterproof vinyl covering is placed on top of the braid. This cable is made in a number of different diameters. It is moderately flexible, and so is convenient to install. This solid coaxial cable is commonly available in impedances approximating 50 and 70 ohms.

Air-insulated coaxial lines have lower losses than the solid-dielectric type, but are rarely used in amateur work because they are expensive and difficult to install as compared with the flexible cable. The common type of air-insulated coaxial line uses a sold-wire conductor inside a copper tube, with the wire held in the center of the tube by means of insulating "beads" placed at regular intervals.

Characteristic Impedance

The characteristic impedance of an air-insulated coaxial line is given by the formula

$$Z_0 = 138 \log \frac{b}{a} \qquad \text{(20-E)}$$

where Z_0 = Characteristic impedance
b = Inside diameter of outer conductor
a = Outside diameter of inner conductor (in same units as b)

The formula for coaxial lines is approximately correct for lines in which bead spacers are used, provided the beads are not too closely spaced. When the line is filled with a solid dielectric, the characteristic impedance as given by the formula should be multiplied by $1/\sqrt{K}$, where K is the dielectric constant of the material.

ELECTRICAL LENGTH

In the discussion of line operation earlier in this chapter it was assumed that currents traveled along the conductors at the speed of light. Actually, the velocity is somewhat less, the reason being that electromagnetic fields travel more slowly in material dielectrics than they do in free space. In air the velocity is practically the same as in empty space, but a practical line always has to be supported in some fashion by solid insulating materials. The result is that the fields are slowed down; the currents travel a shorter distance in the time of one cycle than they do in space, and so the wavelength along the line is less than the wavelength would be in free space at the same frequency.

Whenever reference is made to a line as being so many wavelengths (such as a "half wavelength" or "quarter wavelength") long, it is to be understood that the *electrical* length of the line is meant. Its actual physical length as measured by a tape always will be somewhat less. The physical length corresponding to an electrical wavelength is given by

$$\textit{Length in feet} = \frac{984V}{f} \qquad \text{(20-F)}$$

where f = Frequency in megahertz
V = Velocity factor

The velocity factor is the ratio of the actual velocity along the line to the velocity in free space. Values of V for several common types of line are given in Table 20-I.

Example: A 75-foot length of 300-ohm Twin-Lead is used to carry power to an antenna at a frequency of 7150 kHz. From Table 20-I, V is 0.82. At this frequency (7.15 MHz) a wavelength is

$$\textit{Length}\ (\text{feet}) = \frac{984V}{f} = \frac{984}{7.15} \times 0.82$$

$$= 137.6 \times 0.82 = 112.8 \text{ feet}$$

The line length is therefore 75/112.8 = 0.665 wavelength.

Because a quarter-wavelength line is frequently used as a linear transformer, it is convenient to calculate the length of a quarter-wave line directly. The formula is

$$\textit{Length}\ (\text{feet}) = \frac{246V}{f} \qquad \text{(20-G)}$$

where the symbols have the same meaning as above.

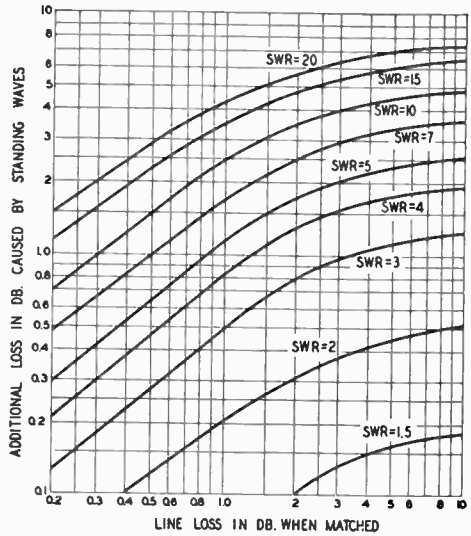

Fig. 20-8 — Effect of standing-wave ratio on line loss. The ordinates give the *additional* loss in decibels for the loss, under perfectly matched conditions, shown on horizontal scale.

LOSSES IN TRANSMISSION LINES

There are three ways by which power may be lost in a transmission line: by radiation, by heating of the conductors (I^2R), and by heating of the dielectric, if any. Radiation losses are in general the result from undesired coupling to the radiating antenna. They cannot readily be estimated or measured, so the following discussion is based only on conductor and dielectric losses.

Heat losses in both the conductor and the dielectric increase with frequency. Conductor losses also are greater the lower the characteristic impedance of the line, because a higher current flows in a low-impedance line for a given power input. The converse is true of dielectric losses because these increase with the voltage, which is greater on high-impedance lines. The dielectric loss in air-insulated lines is negligible (the only loss is in the insulating spacers) and such lines operate at high efficiency when radiation losses are low.

It is convenient to express the loss in a transmission line in decibels per unit length, since the loss in dB is directly proportional to the line length. Losses in various types of lines operated without standing waves (that is, terminated in a resistive load equal to the characteristic impedance of the line) are given in Table 20-I.

When there are standing waves on the line the power loss increases as shown in Fig. 20-8. Whether or not the increase in loss is serious depends on what the original loss would have been if the line were perfectly matched. If the loss with perfect matching is very low, a large SWR will not greatly affect the *efficiency* of the line — i.e., the ratio of the power delivered to the load to the power put into the line.

TABLE 20-I

Characteristics of Commonly-Used Transmission Lines

Type of Line	Z_0 Ohms	Vel. %	pF/ per ft.	OD	Attenuation in dB per 100 feet 3.5	7	14	21	28	50	144	420
RG58/A-AU	53	66	28.5	0.195	0.68	1.0	1.5	1.9	2.2	3.1	5.7	10.4
RG58 Foam Diel.	50	79	25.4	0.195	0.52	0.8	1.1	1.4	1.7	2.2	4.1	7.1
RG59/A-AU	73	66	21.0	0.242	0.64	0.90	1.3	1.6	1.8	2.4	4.2	7.2
RG59 Foam Diel.	75	79	16.9	0.242	0.48	0.70	1.0	1.2	1.4	2.0	3.4	6.1
RG8/A-AU	52	66	29.5	0.405	0.30	0.45	0.66	0.83	0.98	1.35	2.5	4.8
RG8 Foam Diel.	50	80	25.4	0.405	0.27	0.44	0.62	0.76	0.90	1.2	2.2	3.9
RG11/A-AU	75	66	20.5	0.405	0.38	0.55	0.80	0.98	1.15	1.55	2.8	4.9
Aluminum Jacket, Foam Diel.[1]												
3/8 inch	50	81	25.0	–	–	–	0.36	0.48	0.54	0.75	1.3	2.5
1/2 inch	50	81	25.0	–	–	–	0.27	0.35	0.40	0.55	1.0	1.8
3/8 inch	75	81	16.7	–	–	–	0.43	0.51	0.60	0.80	1.4	2.6
1/2 inch	75	81	16.7	–	–	–	0.34	0.40	0.48	0.60	1.2	1.9
Open-wire[2]	–	97	–		0.03	0.05	0.07	0.08	0.10	0.13	0.25	–
300-ohm Twin-lead	300	82	5.8		0.18	0.28	0.41	0.52	0.60	0.85	1.55	2.8
300-ohm tubular	300	80	4.6		0.07	0.25	0.39	0.48	0.53	0.75	1.3	1.9
Open-wire, TV type												
1/2 inch	400	95			0.028	0.05	0.09	0.13	0.17	0.30	0.75	–
1 inch	450	95			0.028	0.05	0.09	0.13	0.17	0.30	0.75	–

1 Polyfoam dielectric type line information courtesy of Times Wire and Cable Co.

2 Attenuation of open-wire line based on No. 12 conductors, neglecting radiation.

TABLE 20-II

Type of Line	Power Rating in Watts 20-MHz	30-	60-	200-
RG58/A-AU	550	430	290	14
RG58 Foam Diel.	1			
RG59/A-AU	860	680	440	208
RG8/A-AU	2000	1720	1250	680
RG11/A-AU	1800	1400	900	400

1 Power handling capabilities of foam-type coaxial lines is approximately 30 percent greater than the polyethylene dielectric types.

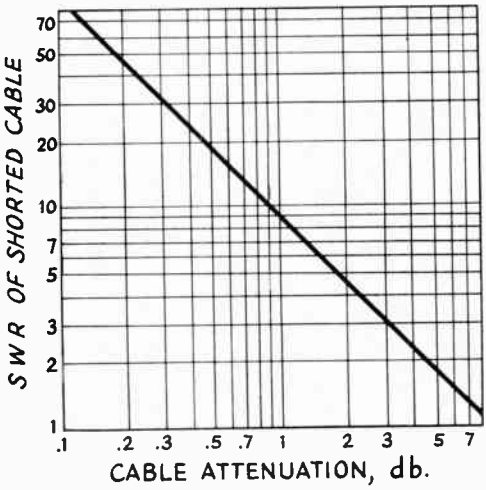

Fig. 20-9 — By short-circuiting the far end of a length of transmission line and measuring the SWR at the transmitter end, the loss in the line (when perfectly terminated) can be found from this chart. (Cholewski, *QST* January, 1960).

Example: A 150-foot length of RG-11/U cable is operating at 7 MHz with a 5-to-1 SWR. If perfectly matched, the loss from Fig. 20-7 would be 1.5 X 0.55 = 0.825 dB. From Fig. 20-8 the additional loss because of the SWR is 0.73dB. The total loss is therefore 0.825 + 0.95 = 1.775 dB.

An appreciable SWR on a solid-dielectric line may result in excessive loss of power at the higher frequencies. Such lines, whether of the parallel-conductor or coaxial type, should be operated as nearly flat as possible, particularly when the line length is more than 50 feet.

TESTING OLD COAXIAL CABLE

Unknown coaxial cable or cable that has been exposed to the weather may have losses above the published figures for the cable type. If one has access to a sensitive and accurate SWR bridge, the cable can be checked for losses at the frequency to be used. Connect the cable to the bridge and a low-powered source of rf and short circuit the far end of the cable. The SWR measurement can then be transformed to the line loss (when perfectly terminated) by referring to Fig. 20-9.

LOADS AND BALANCING DEVICES

The most important practical load for a transmission line is an antenna which, in most cases, will be "balanced" – that is, symmetrically constructed with respect to the feed point. Aside from considerations of matching the actual impedance of the antenna at the feed point to the characteristic impedance of the line (if such matching is attempted) a balanced antenna should be fed through a balanced transmission line in order to preserve symmetry with respect to ground and thus avoid difficulties with unbalanced currents on the line and consequent undesirable radiation from the transmission line itself.

If, as is often the case, the antenna is to be fed through coaxial line (which is inherently unbalanced) some method should be used for connecting the line to the antenna without upsetting the symmetry of the antenna itself. This requires a circuit that will isolate the balanced load from the unbalanced line while providing effecient power transfer. Devices for doing this are called baluns. The types used between the antenna and transmission line are generally "linear," consisting of transmission-line sections.

The need for baluns also arises in coupling a transmitter to a balanced transmission line, since the output circuits of most transmitters have one side grounded. (This type of output circuit is desirable for a number of reasons, including TVI reduction.) The most flexible type of balun for this purpose is the inductively coupled matching network described in a subsequent section in this chapter. This combines impedance matching with balanced-to-unbalanced operation, but has the disadvantage that it uses resonant circuits and thus can work over only a limited band of frequencies without readjustment. However, if a fixed impedance ratio in the balun can be tolerated, the coil balun described below can be used without adjustment over a frequency range of about 10 to 1 – 3 to 30 MHz, for example.

Coil Baluns

The type of balun known as the "coil balun" is based on the principles of linear-transmission-line balun as shown in the upper drawing of Fig. 20-10. Two transmission lines of equal length having a characteristic impedance Z_0 are connected in series at one end and in parallel at the other. At the series-connected end the lines are balanced to ground and will match an impedance equal to $2Z_0$. At the parallel-connected end the lines will be matched by an impedance equal to $Z_0/2$. One side may be connected to ground at the parallel-connected end, provided the two lines have a length such that, considering each line as a single wire, the balanced end is effectively decoupled from the parallel-connected end. This requires a length that is an odd multiple of 1/4 wavelength.

A definite line length is required only for decoupling purposes, and so long as there is adequate decoupling the system will act as a 4-to-1 impedance transformer regardless of line length. If

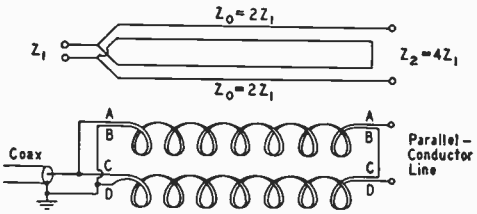

Fig. 20-10 – Baluns for matching between push-pull and single-ended circuits. The impedance ratio is 4 to 1 from the push-pull side to the unbalanced side. Coiling the lines (lower drawing) increases the frequency range over which satisfactory operation is obtained.

each line is wound into a coil, as in the lower drawing, the inductances so formed will act as choke coils and will tend to isolate the series-connected end from any ground connection that may be placed on the parallel-connected end. Balun coils made in this way will operate over a wide frequency range, since the choke inductance is not critical. The lower frequency limit is where the coils are no longer effective in isolating one end from the other; the length of line in each coil should be about equal to a quarter wave-length at the lowest frequency to be used.

The principal application of such coils is in going from a 300-ohm balanced line to a 75-ohm coaxial line. This requires that the Z_0 of the lines forming the coils be 150 ohms.

A balun of this type is simply a fixed-ratio transformer, when matched. It cannot compensate for inaccurate matching elsewhere in the system. With a "300-ohm" line on the balanced end, for example, a 75-ohm coax cable will not be matched unless the 300-ohm line actually is terminated in a 300-ohm load.

TWO BROAD-BAND TOROIDAL BALUNS

Air-wound balun transformers are somewhat bulky when designed for operation in the 1.8- to 30-MHz range. A more compact broad-band transformer can be realized by using toroidal ferrite core material as the foundation for bifilar-wound coil balun transformers. Two such baluns are described here.

In Fig. 20-11 at A, a 1:1 ratio balanced-to-unbalanced-line transformer is shown. This transformer is useful in converting a 50-ohm balanced line condition to one that is 50 ohms, unbalanced. Similarly, the transformer will work between balanced and unbalanced 75-ohm impedances. A 4:1 ratio transformer is illustrated in Fig. 20-11 at B. This balun is useful for converting a 200-ohm balanced condition to one that is 50 ohms, unbalanced. In a like manner, the transformer can be used between a balanced 300-ohm point and a 75-ohm unbalanced line. Both balun transformers will handle 1000 watts of rf power and are designed to operate from 1.8 through 60 MHz.

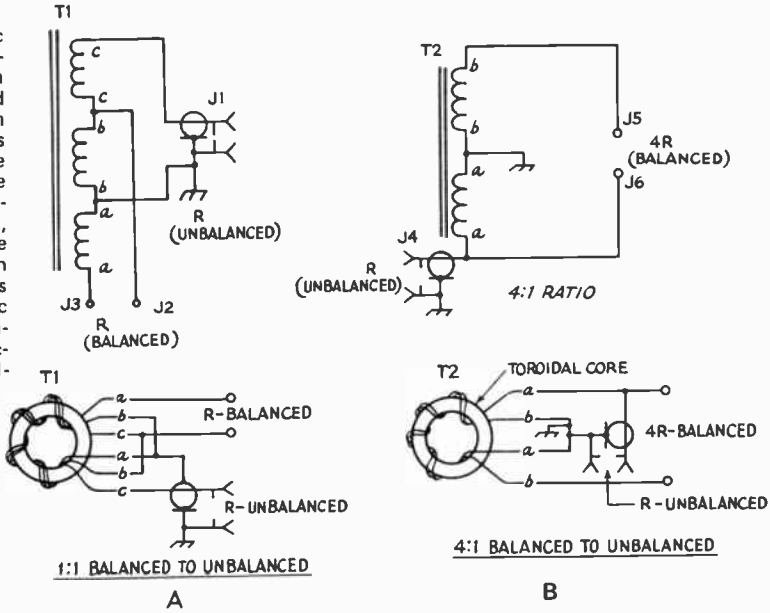

Fig. 20-11 – Schematic and pictorial representations of the balun transformers. T1 and T2 are wound on CF-123 toroid cores (see footnote 1, and the text). J1 and J4 are SO-239-type coax connectors, or similar. J2, J3, J5, and J6 are steatite feedthrough bushings. The windings are labeled a, b, and c to show the relationship between the pictorial and schematic illustrations.

Low-loss high-frequency ferrite core material is used for T1 and T2.[1,3] The cores are made from Q-2 material and cost approximately $5.50 in single-lot quantity. They are 0.5 inches thick, have an OD of 2.4 inches, and the ID is 1.4 inches. The permeability rating of the cores is 40. A packaged one-kilowatt balun kit, with winding instructions for 1:1 or 4:1 impedance transformation ratios, is available, but uses a core of slightly different dimensions.[2]

Winding Information

The transformer shown in Fig. 20-10C at A has a trifilar winding consisting of 10 turns of No. 14 formvar-insulated copper wire. A 10-turn bifilar winding of the same type of wire is used for the balun of Fig. 20-10C at B. If the cores have rough edges, they should be carefully sanded until smooth enough to prevent damage to the wire's formvar insulation. The windings should be spaced around the entire core as shown in Fig. 20-10C. Insulation can be used between the core material and the windings to increase the power handling capabilities of the core.

Using the Baluns

For indoor applications, the transformers can be assembled open style, without benefit of a protective enclosure. For outdoor installations, such as at the antenna feed point, the balun should be encapsulated in epoxy resin or mounted in a suitable weather-proof enclosure. A Minibox, sealed against moisture, works nicely for the latter.

NONRADIATING LOADS

Typical examples of nonradiating loads for a transmission line are the grid circuit of a power amplifier (considered in the chapter on transmitters), the input circuit of a receiver, and another transmission line. This last case includes the "antenna tuner" – a misnomer because it is

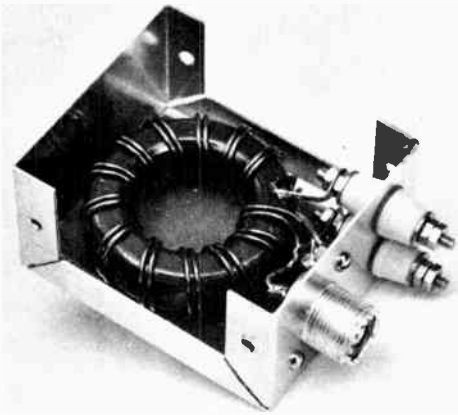

Fig. 20-12 – Layout of a kilowatt 4:1 toroidal balun transformer. Phenolic insulating board is mounted between the transformer and the Minibox wall to prevent short-circuiting. The board is held in place with epoxy cement. Cement is also used to secure the transformer to the board. For outdoor use, the Minibox cover can be installed, then sealed against the weather by applying epoxy cement along the seams of the box.

[1] Available in single-lot quantity from Permag Corp, 88-06 Van Wyck Expy, Jamaica, NY 11418.

[2] Amidon Associates, 12033 Otsego Street, North Hollywood, CA 91601.

[3] Toroid cores are also available from Ferroxcube Corp. of America, Saugerties, NY 12477.

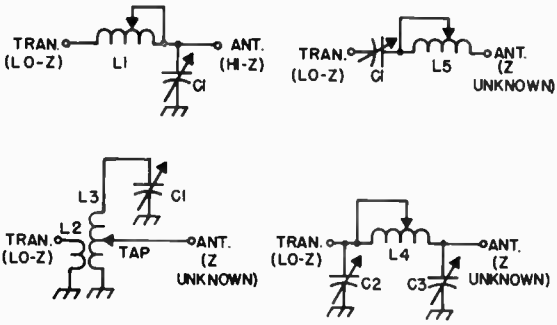

Fig. 20-13 — Networks for matching a low-Z transmitter output to random-length end-fed wire antennas.

actually a device for coupling a transmission line to the transmitter. Because of its importance in amateur installations, the antenna coupler is considered separately in a later part of this chapter.

Coupling to a Receiver

A good match between an antenna and its transmission line does not guarantee a low standing-wave ratio on the line when the antenna system is used for receiving. The SWR is determined wholly by what the line "sees" at the receiver's antenna-input terminals. For minimum SWR the receiver input circuit must be matched to the line. The rated input impedance of a receiver is a nominal value that varies over a considerable range with frequency. Methods for bringing about a proper match are discussed in the chapter on receivers.

The most desirable condition is that in which the receiver is matched to the line Z_0 and the line in turn is matched to the antenna. This transfers maximum power from the antenna to the receiver with the least loss in the transmission line.

COUPLING TO RANDOM-LENGTH ANTENNAS

Several impedance-matching schemes are shown in Fig. 20-13, permitting random-length wires to be matched to normal low-Z transmitter outputs. The circuit used will depend upon the length of the antenna wire and its impedance at the desired operating frequency. Ordinarily, one of the four methods shown will provide a suitable impedance match to an end-fed random wire, but the configuration will have to be determined experimentally. For operation between 3.5 and 30 MHz, C1 can be a 200-pF type with suitable plate spacing for the power level in use. C2 and C3 should be 500-pF units to allow for flexibility in matching. L1, L4, and L5 should be tapped or rotary inductors with sufficient L for the operating frequency. L3 can be a tapped Miniductor coil with ample turns for the band being used. An SWR bridge should be used as a match indicator.

COUPLING THE TRANSMITTER TO THE LINE

The type of coupling system that will be needed to transfer power adequately from the final rf amplifier to the transmission line depends almost entirely on the input impedance of the line. As shown earlier in this chapter, the input impedance is determined by the standing-wave ratio and the line length. The simplest case is that where the line is terminated in its characteristic impedance so that the SWR is 1 to 1 and the imput impedance is equal to the Z_0 of the line, regardless of line length.

Coupling systems that will deliver power into a flat line are readily designed. For all practical purposes the line can be considered to be flat if the SWR is no greater than about 1.5 to 1. That is, a coupling system designed to work into a pure resistance equal to the line Z_0 will have enough leeway to take care of the small variations in input impedance that will occur when the line length is changed, if the SWR is higher than 1 to 1 but no greater than 1.5 to 1.

Current practice in transmitter design is to

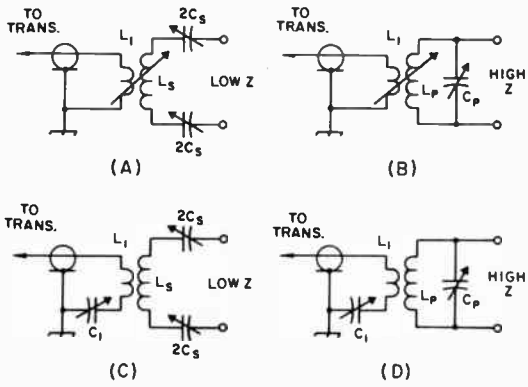

Fig. 20-14 — Simple circuits for coupling a transmitter to a balanced line that presents a load different than the transmitter design output impedance. (A) and (B) are respectively series- and parallel-tuned circuits using variable inductive coupling between coils, and (C) and (D) are similar but use fixed inductive coupling and a variable series capacitor, C1. A series-tuned circuit works well with a low-impedance load; the parallel circuit is better with high-impedance loads (several hundred ohms or more).

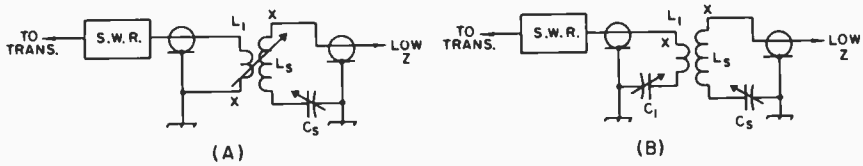

Fig. 20-15 — Coupling from a transmitter designed for 50- to 75-ohm output to a coaxial line with a 3- or 4-to-1 SWR is readily accomplished with these circuits. Essential difference between the circuits is (A) adjustable inductive coupling and (B) fixed inductive coupling with variable series capacitor.

In either case the circuit can be adjusted to give a 1-to-1 SWR on the meter in the line to the transmitter. The coil ends marked "x" should be adjacent, for minimum capacitive coupling.

provide an output circuit that will work into such a line, usually a coaxial line of 50 to 75 ohms characteristic impedance. The design of such output circuits is discussed in the chapter on high-frequency transmitters. If the input impedance of the transmission line that is to be connected to the transmitter differs appreciably from the value of impedance into which the transmitter output circuit is designed to operate, an impedance-matching network must be inserted between the transmitter and the line input terminals.

IMPEDANCE-MATCHING CIRCUITS FOR TRANSMISSION LINES

As shown earlier in this chapter, the input impedance of a line that is operating with a high standing-wave ratio can vary over quite wide limits. The simplest type of circuit that will match such a range of impedances to 50 to 75 ohms is a simple series- or parallel-tuned circuit, approximately resonant at the operating frequency. If the load presented by the line at the operating frequency is low (below a few hundred ohms), a series-tuned circuit should be used. When the load is higher than this, the parallel-tuned circuit is easier to use.

Typical simple circuits for coupling between the transmitter with 50- to 75-ohm coaxial-line output and a balanced transmission line are shown in Fig. 20-14. The inductor L1 should have a reactance of about 60 ohms when adjustable inductive coupling is used (Figs. 20-14A and 20-14B). When a variable series capacitor is used, L1 should have a reactance of about 120 ohms. The variable capacitor, C1, should have a reactance at maximum capacitance of about 100 ohms.

On the secondary side, L_s and C_s should be capable of being tuned to resonance at about 80 percent of the operating frequency. In the series-tuned circuits, for a given low-impedance load looser coupling can be used between L1 and L_s as the L_s-to-C_s ratio is increased. In the parallel-tuned circuits, for a given high-impedance load looser coupling can be used between L1 and L_p as the C_p-to-L_p ratio is increased. The constants are not critical; the rules of thumb are mentioned to assist in correcting a marginal condition where sufficient transmitter loading cannot be obtained.

Coupling to coaxial lines that have a high SWR, and consequently may present a transmitter with a load it cannot couple to, is done with an unbalanced version of the series-tuned circuit, as shown in Fig. 20-15. The rule given above for coupling ease and L_s-to-C_s ratio applies to these circuits as well.

The most satisfactory way to set up initially any of the circuits of Fig. 20-14 or 20-15 is to connect a coaxial SWR bridge in the line to the transmitter, as shown in Fig. 20-15. The "Monimatch" type of bridge, which can handle the full transmitter power and may be left in the line for continuous monitoring, is excellent for this purpose. However, a simple resistance bridge such as is described in the chapter on measurements is perfectly adequate, requiring only that the transmitter output be reduced to a very low value so that the bridge will not be overloaded. To adjust the circuit, make a trial setting of the coupling (coil spacing in Figs. 20-14A and B and 20-15A, C1 setting in others) and adjust C_s or C_p for minimum SWR as indicated by the bridge. If the SWR is not close to practically 1 to 1, readjust the coupling and return C_s or C_p, continuing this procedure until the SWR is practically 1 to 1. The settings may then be logged for future reference.

In the series-tuned circuits of Figs. 20-15A and 20-15C, the two capacitors should be set at similar settings. The "$2C_s$" indicates that a balanced series-tuned coupler requires twice the capacitance in each of two capacitors as does an unbalanced series-tuned circuit, all other things being equal.

It is possible to use circuits of this type without initially setting them up with an SWR bridge. In such a case it is a matter of cut-and-try until adequate power transfer between the amplifier and main transmission line is secured. However, this method frequently results in a high SWR in the link, with consequent power loss, "hot spots" in the coaxial cable, and tuning that is critical with frequency. The bridge method is simple and gives the optimum operating conditions quickly and with certainty.

A TRANSMATCH FOR BALANCED OR UNBALANCED LINES

Nearly all commercially made transmitters are designed to work into a 50- to 70-ohm load, and they are not usually equipped to handle loads that depart far from these values. However, many antenna systems (the antenna plus its feed line) have complex impedances that make it difficult, if not impossible, to load and tune a transmitter

Fig. 20-16 — The universal Transmatch shown here will couple a transmitter to almost any antenna system. If the amateur already has a matching indicator, the Monimatch section of the circuit can be eliminated. The counter dial and knobs are James Millen & Co. components.

properly. What is required is a coupling method to convert the reactive/resistive load to a non-reactive 50-ohm load. This task can be accomplished with a Transmatch, a device that consists of one or more *LC* circuits. It can be adjusted to tune out any load reactance plus, when necessary, transforming the load impedance to 50 or 70 ohms.

As has been discussed earlier in this chapter, losses in transmission lines depend on several factors: the size of the conductors, the spacing between conductors, the dielectric material used in the construction of the feed line, and the frequency at which the line is used. Coaxial lines can be classed as lossy lines when compared to a low-loss line such as open-wire feeders, at least below 100 MHz. Because losses increase as the SWR increases, the type of line used to feed an antenna should be chosen carefully. If the transmission line has very low-loss characteristics, high standing wave ratios can be tolerated with no practical loss of power in the line.

A wire antenna, fed at the center with open-wire line, is the most efficient multiband antenna devised to date. For all practical purposes, the feed line is lossless, so extremely high SWRs can be tolerated. This should not be construed to mean that coaxial feed lines cannot be used because of a high SWR, but only the very expensive types are really suitable in this application.

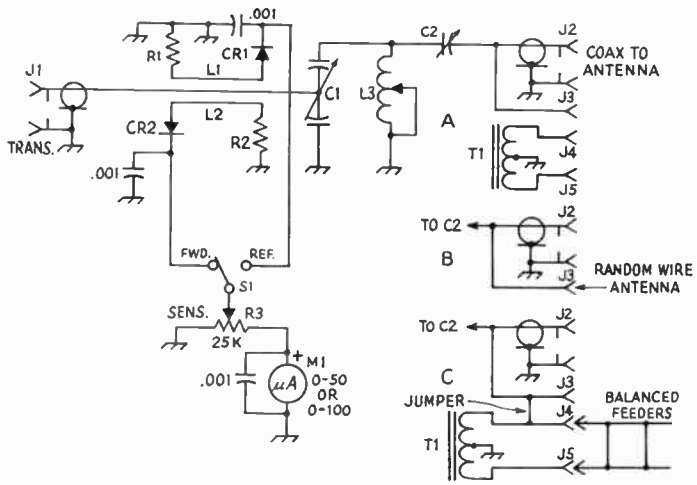

Fig. 20-17 — Circuit diagram of the Transmatch. The .001-μF capacitors used are disk ceramic.
C1 — Dual-section or air variable, 200 pF per section (E. F. Johnson 154-507 or Millen 16250).
C2 — Air variable, (E. F. Johnson 154-10 or Millen 16520A).
CR1, CR2 — 1N34A germanium diode.
J1, J2 — Coax chassis connector, type SO-239.
J3, J4, J5 — Isolantite feedthrough insulators.
L1, L2 — See Fig. 20-18.
L3 — Roller inductor, 28 μH (E. F. Johnson 229-203).
M1 — 50- or 100-μA.
R1, R2 — 68-ohm, 1/2-watt carbon or composition.
R3 — 25,000-ohm control, linear taper.
S1 — Spst toggle.
T1 — Balun transformer, see text and Fig. 20-18.

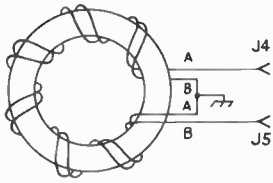

Fig. 20-18 — Details of the balun bifilar windings. The drawing shows the connections required. In the actual balun, the turns should be closed spaced on the inside of the core and spread evenly on the outside.

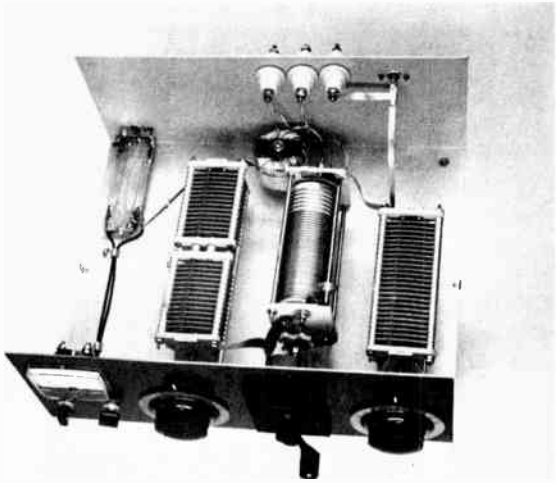

Fig. 20-19 — Interior view of the Transmatch. The etched-circuit Monimatch is mounted 1/2 inch above the chassis. Both C1 and C2 must be mounted on insulated stand-offs and insulated shaft couplers used between the capacitors and the panel knobs. Likewise, T1 should be installed on an insulated mounting. An isolantite cone is used in the unit shown (the balun could be mounted on a piece of Plexiglas). Feedthrough isolantite insulators, mounted through the rear deck, are used for the antenna connectors.

The Transmatch shown in Fig. 20-16 is designed to handle practically any mismatch that an amateur is likely to encounter. The unit can be used with either open-wire feeders, balanced lines, coaxial lines, or even an end-fed single wire. Frequency range of the unit is from 3 to 30 MHz, accomplished without the use of bandswitching. Basically, the circuit is designed for use with unbalanced lines, such as "coax." For balanced lines, a 1:4 (unbalanced-to-balanced) balun is connected to the output of the Transmatch.

The chassis used for the Transmatch is made of a 16 X 25-inch sheet of aluminum. When bent to form a U, the completed chassis measures 16 X 13 X 6 inches. When mounting the variable capacitors, the roller inductor and the balun, allow at least 1/2-inch clearance to the chassis and adjoining components. The capacitors should be mounted on insulated standoff insulators. The balun can be mounted on a cone insulator or piece of Plexiglas.

The balun requires three ferrite cores stacked for 2-kW or two cores for 1-kW power levels. Amidon type T-200-2 cores are used in making the balun.[2] Each core should be covered with two layers of 3M No. 27 glass-cloth insulating tape. Next, the cores are stacked and covered with another layer of the tape. The winding consists of 15 bifilar turns of No. 14, Teflon-covered wire. Approximately 20 feet of wire (two 10-foot lengths) are required.

A template for the etched-circuit Monimatch is shown in Fig. 20-20. Details for making etched circuits are given in the Construction Practices chapter. If the builder desires, a power-type bridge can be substituted. Such a unit is described in the Measurements chapter. In addition to providing standing-wave indications for Transmatch adjustment purposes, the power bridge will accurately measure transmitter output power.

For coax-to-coax feeder matching, the antenna feed line should be connected to J2 of Fig. 20-17. C1 and C2 should be set at maximum capacitance and power applied to the transmitter. The SWR indicator should be switched to read reflected power. Then, adjust L3 until there is a drop in the reflected reading. C1 and C2 should then be reset, along with L3, until a perfect match is obtained. It will be found that with many antenna systems, several different matching combinations can be obtained. Always use the matching setting that uses the most capacitance from C1 and C2, as maximum *C* provides the best harmonic attenuation.

End-fed wires should be connected to J3. Use the same adjustment procedures for setting up the Transmatch as outlined above. For balanced feeders, the feed line should be connected to J4 and J5, and a jumper must be connected between J3 and J4 (see Fig. 20-17 at C).

A slight modification will permit this Transmatch to be used on the 160-meter band. Fixed capacitors, 100 pF each (Centralab type 850S-100N), can be installed across each of the stator sections of C1, providing sufficient *C* to tune to 1.8 MHz. But, the fixed capacitors must be removed when using the Transmatch on the other hf bands.

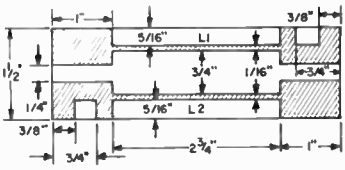

Fig. 20-20 — Template for the etched-circuit Monimatch, foil side shown, etched portion shaded.

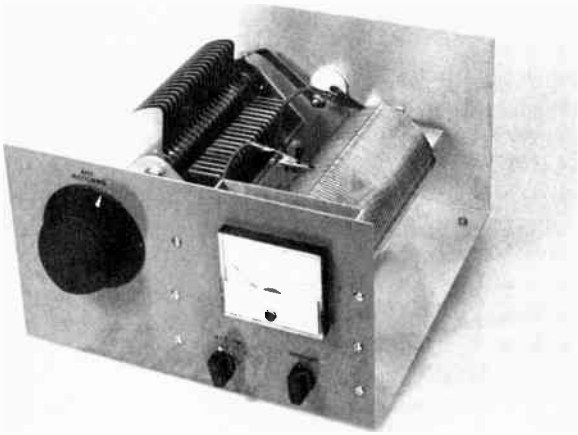

Fig. 20-21 — The 160-meter Transmatch.

A 160-METER TRANSMATCH

The unit shown in Fig. 20-21 is a 160-meter Transmatch designed to work with antenna systems that offer a low-impedance load. Any antenna system for the 80-meter band, or higher in frequency, will present this type of load. Using the Transmatch described, the amateur can probably use his present antenna system for 160-meter operation.

The circuit, Fig. 20-21, consists of an inductor, L1, and a series-connected capacitor, C1. Also included is an SWR indicator. Details for the SWR indicator are given in Fig. 20-20.

The Transmatch is built on a homemade chassis that is shaped in the form of a U. The chassis is 10 1/2 X 10 1/2 X 6 inches. C1 must be insulated from the chassis. The capacitor is mounted on 1-inch high isolantite standoff insulators and the capacitor shaft is connected to the front-panel knob via an insulated shaft coupler. L1 is mounted on a piece of Plexiglas that is supported by a standoff insulator at the front and a metal bracket at the rear. The coil is held to the Plexiglas with epoxy cement.

Shown in Fig. 20-24 are some typical amateur antennas that can be used with the Transmatch. In the case of Twin-Lead feeders, or open-wire line, connect the feeders together and attach them to the antenna terminal on the Transmatch. If the antenna system is fed with coaxial line, connect the inner and outer conductors together and attach the line to the Transmatch. However, with coax, the outer shield should *not* be grounded at any point between the Transmatch and the antenna. If the shield is grounded, connect only the inner conductor to the Transmatch and let the shield

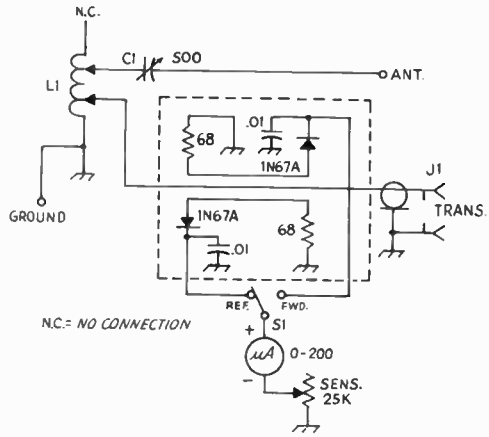

Fig. 20-22 — Circuit diagram of the Transmatch.
C1 — 500-pF air variable (Millen 16500 or equiv.).
L1 — 44 turns No. 14, 8 tpi, 3-in. dia (B&W 3034).
J1 — Coax fitting, chassis mount, type SO-239.
S1 — Spst toggle or rotary.

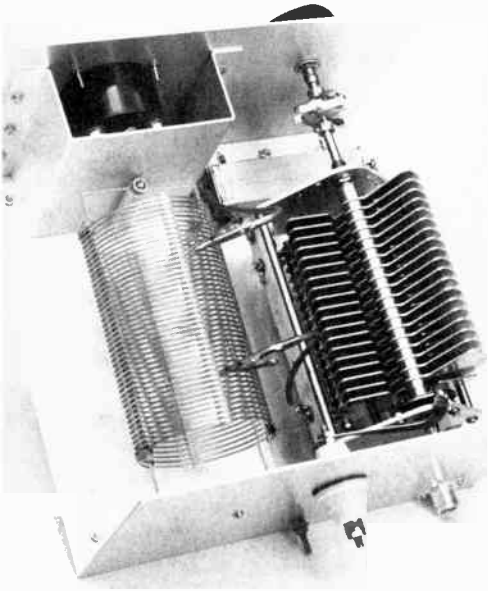

Fig. 20-23 — At the right is C1, the 500-pF variable. Note the insulated shaft coupling and the grounding nut and screw at the bottom of the rear panel. An earth ground is necessary for the operation of this Transmatch.

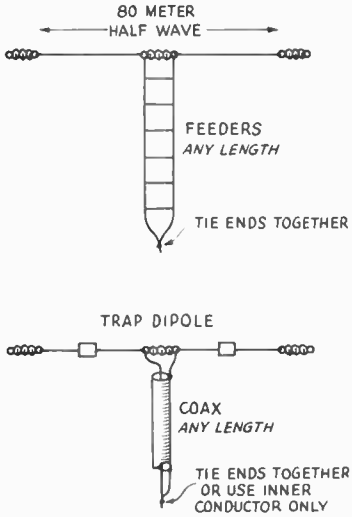

Fig. 20-24 — Some typical antenna systems that can be used with the 160-meter Transmatch.

"float." If the antenna is an end-fed wire which is longer than 135 feet, then it should be made an odd multiple of a 160-meter quarter wavelength. Thus, a low-impedance feed point will exist at the transmitter end of the wire.

A good ground system will be necessary with this type of Transmatch. The efficiency of the antenna will depend on the quality of the ground. To adjust the Transmatch, feed enough power through the system to get a reading on the SWR bridge. Start with lead from C1 clipped to L1 near the top of the coil and the lead from the bridge tapped near the bottom of the coil. Move the tap points, readjusting C1 after each change until you find a combination that provides a match, as indicated by a low SWR reading on the bridge.

HF Antennas

HF ANTENNAS

An *antenna system* can be considered to include the antenna proper (the portion that radiates the rf energy), the feed line, and any coupling devices used for transferring power from the transmitter to the line and from the line to the antenna. Some simple systems may omit the transmission line or one or both of the coupling devices. This chapter will describe the antenna proper, and in many cases will show popular types of lines, as well as line-to-antenna couplings where they are required. However, it should be kept in mind that *any* antenna proper can be used with *any* type of feedline if a suitable impedance matching is used between the antenna and the line.

ANTENNA SELECTION AND CONSIDERATIONS

In choosing an antenna one must base his selection upon available space, the number of bands to be operated, and the type of propagation he will most often make use of. Frequently, because of limitations in available antenna space, the hf operator must settle for relatively simple antenna systems. It is wise to choose an antenna that will offer the best performance for its size. The "compromise antenna" – those offering multiband possibilities, and those using physically shortened elements – cannot perform as efficiently as full-size antennas cut for a single band of operation. However, many of the so-called compromise antennas are suitable for DX work even though they have less gain than other types. Ideally, one should attempt to have separate antennas – full size – for the bands to be operated. Also, erecting the antennas as high as possible, and away from trees and man-made objects, will greatly enhance their operational effectiveness.

In general, antenna construction and location become more critical and important on the higher frequencies. On the lower frequencies (1.8, 3.5, and 7 MHz) the vertical angle of radiation and the plane of polarization may be of relatively little importance; at 28 MHz they may be all-important.

Definitions

The polarization of a straight-wire antenna is determined by its position with respect to the earth. Thus a vertical antenna radiates vertically polarized waves, while a horizontal antenna radiates horizontally polarized waves in a direction broadside to the wire and vertically polarized waves at high vertical angles off the ends of the wire. The wave from an antenna in a slanting position, or from the horizontal antenna in directions other than mentioned above, contains components of both horizontal and vertical polarization.

The vertical angle of maximum radiation of an antenna is determined by the free-space pattern of the antenna, its height above ground, and the nature of the ground. The angle is measured in a vertical plane with respect to a tangent to the earth at that point, and it will usually vary with the horizontal angle, except in the case of a simple vertical antenna. The horizontal angle of maximum radiation of an antenna is determined by the free-space pattern of the antenna.

The impedance of the antenna at any point is the ratio of the voltage to the current at that point. It is important in connection with feeding power to the antenna, since it constitutes the load to the line offered by the antenna. It can be either resistive or complex, depending upon whether or not the antenna is resonant.

The field strength produced by an antenna is proportional to the current flowing in it. When there are standing waves on an antenna, the parts of the wire carrying the higher current have the greater radiating effect. All resonant antennas have standing waves – only terminated types, like the terminated rhombic and terminated "V" have substantially uniform current along their length.

The ratio of power required to produce a given field strength with a "comparison" antenna to the power required to produce the same field strength with a specified type of antenna is called the power gain of the latter antenna. The field is measured in the optimum direction of the antenna under test. The comparison antenna is generally a half-wave antenna at the same height and having the same polarization as the antenna under consideration. Gain usually is expressed in decibels.

In unidirectional beams (antennas with most of the radiation in only one direction) the **front-to-back** ratio is the ratio of power radiated in the maximum direction to power radiated in the opposite direction. It is also a measure of the reduction in received signal when the beam direction is changed from that for maximum response to the opposite direction. Front-to-back ratio is usually expressed in decibels.

The bandwidth of an antenna refers to the frequency range over which a property falls within acceptable limits. The gain bandwidth, the front-to-back-ratio bandwidth and the standing-wave-ratio bandwidth are of prime interest in amateur work. The gain bandwidth is of interest because, generally, the higher the antenna gain is the narrower the gain bandwidth will be. The SWR bandwidth is of interest because it is an indication

of the transmission-line efficiency over the useful frequency range of the antenna.

The radiation pattern of any antenna that is many wavelengths distant from the ground and all other objects is called the free-space pattern of the antenna. The free-space pattern of an antenna is almost impossible to obtain in practice, except in the vhf and uhf ranges. Below 30 MHz, the height of the antenna above ground is a major factor in determining the radiation pattern of the antenna.

When any antenna is near the ground the free-space pattern is modified by reflection of radiated waves from the ground, so that the actual pattern is the resultant of the free-space pattern and ground reflections. This resultant is dependent upon the height of the antenna, its position or orientation with respect to the surface of the ground, and the electrical characteristics of the ground. The effect of a perfectly reflecting ground is such that the original free-space field strength may be multiplied by a factor which has a maximum value of 2, for complete reinforcement, and having all intermediate values to zero, for complete cancellation. These reflections only affect the radiation pattern in the vertical plane – that is, in directions upward from the earth's surface – and not in the horizontal plane, or the usual geographical directions.

Fig. 21-1 shows how the multiplying factor varies with the vertical angle for several representative heights for horizontal antennas. As the height is increased the angle at which complete reinforcement takes place is lowered, until for a height equal to one wavelength it occurs at a vertical angle of 15 degrees. At still greater heights, not shown on the chart, the first maximum will occur at still smaller angles.

Radiation Angle

The vertical angle of maximum radiation is of primary importance, especially at the higher frequencies. It is advantageous, therefore, to erect the antenna at a height that will take advantage of ground reflection in such a way as to reinforce the space radiation at the most desirable angle. Since low angles usually are most effective, this generally means that the antenna should be high – at least one-half wavelength at 14 MHz, and preferably three-quarters or one wavelength, and at least one wavelength, and preferably higher, at 28 MHz. The physical height required for a given height in wavelengths decreases as the frequency is increased, so that good heights are not impracticable; a half wavelength at 14 MHz is only 35 feet, approximately, while the same height represents a full wavelength at 28 MHz. At 7 MHz and lower frequencies the higher radiation angles are effective, so that again a useful antenna height is not difficult to attain. Heights between 35 and 70 feet are suitable for all bands, the higher figures being preferable. It is well to remember that most simple horizontally polarized antennas do not exhibit the directivity they are capable of unless they are one half wavelength above ground, or greater, at their operating frequency. Therefore, with dipole-type antennas it is not important to choose a favored broadside direction unless the antenna is at least one-half wavelength above ground.

Imperfect Ground

Fig. 21-1 is based on ground having perfect conductivity, whereas the actual earth is not a perfect conductor. The principal effect of actual ground is to make the curves inaccurate at the lowest angles; appreciable high-frequency radiation at angles smaller than a few degrees is practically impossible to obtain over horizontal ground. Above 15 degrees, however, the curves are accurate enough for all practical purposes, and may be taken as indicative of the result to be expected at angles between 5 and 15 degrees.

The effective ground plane – that is, the plane from which ground reflections can be considered to take place – seldom is the actual surface of the ground but is a few feet below it, depending upon the characteristics of the soil.

Impedance

Waves that are reflected directly upward from the ground induce a current in the antenna in passing, and, depending on the antenna height, the phase relationship of this induced current to the original current may be such as either to increase or decrease the total current in the antenna. For the same power input to the antenna, an increase in current is equivalent to a decrease in impedance, and vice versa. Hence, the impedance of the antenna varies with height. The theoretical curve of variation of radiation resistance for a very thin half-wave antenna above perfectly reflecting ground is shown in Fig. 21-2. The impedance approaches the free-space value as the height becomes large, but at low heights may differ considerably from it.

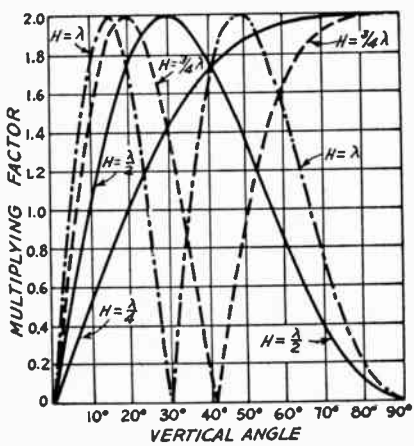

Fig. 21-1 – Effect of ground on radiation of horizontal antennas at vertical angles for four antenna heights. This chart is based on perfectly conducting ground.

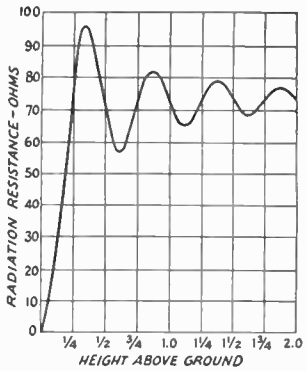

Fig. 21-2 — Theoretical curve of variation of radiation resistance for a very thin half-wave horizontal antenna as a function of height in wavelength above perfectly reflecting ground.

Choice of Polarization

Polarization of the transmitting antenna is generally unimportant on frequencies between 3.5 and 30 MHz, when considering sky-wave communications. However, the question of whether the antenna should be installed in a horizontal or vertical position deserves consideration for other reasons. A vertical half-wave or quarter-wave antenna will radiate equally well in all *horizontal* directions, so that it is substantially nondirectional, in the usual sense of the word. If installed horizontally, however, the antenna will tend to show directional effects, and will radiate best in the direction at right angles, or broadside, to the wire. The radiation in such a case will be *least* in the direction toward which the wire points.

The vertical angle of radiation also will be affected by the position of the antenna. If it were not for ground losses at high frequencies, the vertical antenna would be preferred because it would concentrate the radiation horizontally, and this low-angle radiation is preferable for practically all work. Another advantage to the use of a vertically polarized antenna, especially at 1.8, 3.5, and 7 MHz, is that local communications during night-time hours are improved. The vertical antenna is not as subject to signal fading as is the horizontal antenna.

THE HALF-WAVE ANTENNA

A fundamental form of antenna is a single wire whose length is approximately equal to half the transmitting wavelength. It is the unit from which many more-complex forms of antennas are constructed. It is known as a dipole antenna.

The length of a half-wave in space is:

$$\textit{Length}\ (\text{feet}) = \frac{492}{\textit{Freq.}\ (\text{MHz})} \qquad \text{21-A}$$

The actual length of a half-wave antenna will not be exactly equal to the half-wave in space, but depends upon the thickness of the conductor in relation to the wavelength as shown in Fig. 21-3, where K is a factor that must be multiplied by the half wavelength in free space to obtain the resonant antenna length. An additional shortening effect occurs with wire antennas supported by insulators at the ends because of the capacitance added to the system by the insulators (end effect). The following formula is sufficiently accurate for wire antennas for frequencies up to 30 MHz:

$$\textit{Length of half-wave antenna}\ (\text{feet}) = \frac{492 \times 0.95}{\textit{Freq.}\ (\text{MHz})} = \frac{468}{\textit{Freq.}\ \text{MHz})} \qquad \text{21-B}$$

Example: A half-wave antenna for 7150 kHz (7.15 MHz) is $\frac{468}{7.15}$ = 65.45 feet, or 65 feet 5 inches.

Above 30 MHz the following formulas should be used, particularly for antennas constructed from rod or tubing. K is taken from Fig. 21-3.

$$\textit{Length of half-wave antenna}\ (\text{feet}) = \frac{492 \times K}{\textit{Freq.}\ (\text{MHz})} \qquad \text{21-C}$$

$$\textit{or length}\ (\text{inches}) = \frac{5905 \times K}{\textit{Freq.}\ (\text{MHz})} \qquad \text{21-D}$$

Example: Find the length of a half wavelength antenna at 28.7 MHz, if the antenna is made of 1/2-inch diameter tubing. At 28.7 MHz, a half wavelength in space is

$$\frac{492}{28.7} = 17.14 \text{ feet}$$

from Equation 21-A. Ratio of half wavelength to conductor diameter (changing wavelength to inches) is

$$\frac{(17.14 \times 12)}{0.5} = 411$$

From Fig. 21-3, K = 0.97 for this ratio. The length of the antenna, from Equation 21-C, is

$$\frac{(492 \times 0.97)}{28.7} = 16.63 \text{ feet}$$

or 16 feet 7 1/2 inches. The answer is obtained directly in inches by substitution of Equation 21-D:

$$\frac{(5905 \times 0.97)}{28.7} = 199.6 \text{ inches.}$$

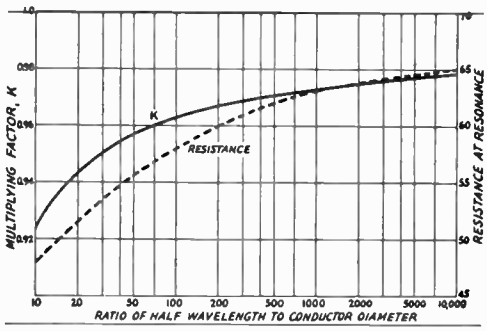

Fig. 21-3 — Effect of antenna diameter on length for half-wave resonance, shown as a multiplying factor, K, to be applied to the free-space half wavelength (Equation 21-A). The effect of conductor diameter on the center impedance also is shown.

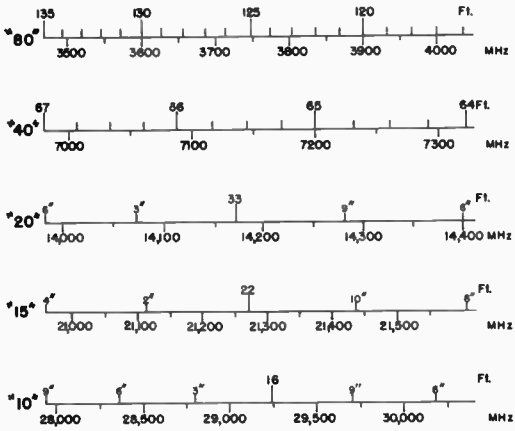

Fig. 21-4 — The above scales, based on Eq. 21-B, can be used to determine the length of a half-wave antenna of wire.

Current and Voltage Distribution

When power is fed to an antenna, the current and voltage vary along its length. The current is maximum (loop) at the center and nearly zero (node) at the ends, while the opposite is true of the rf voltage. The current does not actually reach zero at the current nodes, because of the end effect; similarly, the voltage is not zero at its node because of the resistance of the antenna, which consists of both the rf resistance of the wire (*ohmic resistance*) and the radiation resistance. The radiation resistance is an *equivalent* resistance, a convenient conception to indicate the radiation properties of an antenna. The radiation resistance is the equivalent resistance that would dissipate the power the antenna radiates, with a current flowing in it equal to the antenna current at a current loop (maximum). The ohmic resistance of a half-wavelength antenna is ordinarily small enough, compared with the radiation resistance, to be neglected for all practical purposes.

Impedance

The radiation resistance of an infinitely-thin half-wave antenna in free-space is about 73 ohms.

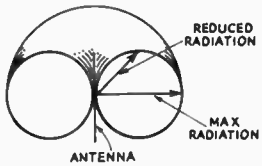

Fig. 21-5 — The free-space radiation pattern of a half-wave antenna. The antenna is shown in the vertical position, and the actual "doughnut" pattern is cut in half to show how the line from the center of the antenna to the surface of the pattern varies. In practice this pattern is modified by the height above ground and if the antenna is vertical or horizontal. Fig. 21-1 shows some of the effects of height on the vertical angele of radiation.

The value under practical conditions is commonly taken to be in the neighborhood of 60 to 70 ohms, although it varies with height in the manner of Fig. 21-2. It increases toward the ends. The actual value at the ends will depend on a number of factors, such as the height, the physical construction, the insulators at the ends, and the position with respect to ground.

Conductor Size

The impedance of the antenna also depends upon the diameter of the conductor in relation to the wavelength, as indicated in Fig. 21-3. If the diameter of the conductor is increased the capacitance per unit length increases and the inductance per unit length decreases. Since the radiation resistance is affected relatively little, the decreased L/C ratio causes the Q of the antenna to decrease, so that the resonance curve becomes less sharp. Hence, the antenna is capable of working over a wide frequency range. This effect is greater as the diameter is increased, and is a property of some importance at the very high frequencies where the wavelength is small.

Fig. 21-6 — Illustrating the importance of vertical angle of radiation in determining antenna directional effects. Off the end, the radiation is greater at higher angles. Ground reflection is neglected in this drawing of the free-space pattern of a horizontal antenna.

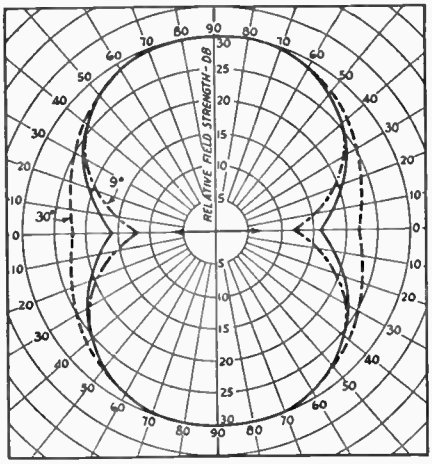

Fig. 21-7 — Horizontal pattern of a horizontal half-wave antenna at three vertical radiation angles. The solid line is relative radiation at 15 degrees. Dotted lines show deviation from the 15-degree pattern for angles of 9 and 30 degrees. The patterns are useful for shape only, since the amplitude will depend upon the height of the antenna above ground and the vertical angle considered. The patterns for all three angles have been proportioned to the same scale, but this does not mean that the maximum amplitudes necessarily will be the same. The arrow indicates the direction of the horizontal antenna wire.

Radiation Characteristics

The radiation from a dipole antenna is not uniform in all directions but varies with the angle with respect to the axis of the wire. It is most intense in directions perpendicular to the wire and zero along the direction of the wire, with intermediate values at intermediate angles. This is shown by the sketch of Fig. 21-5, which represents the radiation pattern in free space. The relative intensity of radiation is proportional to the length of a line drawn from the center of the figure to the perimeter. If the antenna is vertical, as shown, then the field strength will be uniform in all horizontal directions; if the antenna is horizontal, the relative field strength will depend upon the direction of the receiving point with respect to the direction of the antenna wire. The variation in radiation at various vertical angles from a half-wavelength horizontal antenna is indicated in Figs. 21-6 and 21-7.

FEEDING A DIPOLE ANTENNA

Since the impedance at the center of a dipole is in the vicinity of 70 ohms, it offers a good match for 75-ohm transmission lines. Several types are available on the market, with different power-handling capabilities. They can be connected in the center of the antenna, across a small strain insulator to provide a convenient connection point. Coaxial line should be used with a 1:1 balun transformer to assure symmetry. Direct feed (without a balun) is also acceptable, but may cause a slight skew in the radiation pattern. The transmission line should be run away at right angles to the antenna for at least one-quarter wavelength, if possible, to avoid current unbalance in the line caused by pickup from the antenna. The antenna length is calculated from Equation 21-B, for a half wavelength antenna. When No. 12 or No. 14 enameled wire is used for the antenna, as is generally the case, the length of the wire is the overall length measured from the loop through the insulator at each end. This is illustrated in Fig. 21-8.

The use of 75-ohm line results in a "flat" line over most of any amateur band. However, by making the half-wave antenna in a special manner, called the two-wire or folded dipole, a good match is offered for a 300-ohm line. Such an antenna is shown in Fig. 21-9. The open-wire line shown in Fig. 21-9 is made of No. 12 or No. 14 enameled wire, separated by lightweight spacers of Plexiglas or other material (it doesn't have to be a *low-loss* insulating material), and the spacing can be on the order of from 4 to 8 inches, depending upon what is convenient, and what the operating frequency is.

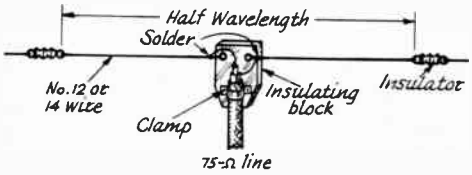

Fig. 21-8 – Construction of a dipole fed with 75-ohm line. The length of the antenna is calculated from Equation 21-B or Fig. 21-4.

At 14 MHz, 4-inch separation is satisfactory, and 8-inch spacing can be used at 3.5 MHz.

The half-wavelength antenna can also be made from the proper length of 300-ohm line, opened on one side in the center and connected to the feedline. After the wires have been soldered together, the joint can be strengthened by molding some of the excess insulating material (polyethylene) around the joint with a hot iron, or a suitable lightweight clamp of two pieces of Plexiglas can be devised.

Similar in some respects to the two-wire folded dipole, the three-wire folded dipole of Fig. 21-10 offers a good match for a 600-ohm line. It is favored by amateurs who prefer to use an open-wire line instead of the 300-ohm insulated line. The three wires of the antenna proper should all be of the same diameter.

Another method for offering a match to a 600-ohm open-wire line with a half wavelength antenna is shown in Fig. 21-11. The system is called a delta match. The line is "fanned" as it approaches the antenna, to have a gradually increasing impedance that equals the antenna impedance at the point of connection. The dimensions are fairly critical, but careful measurement before installing the antenna and matching section is generally all that is necessary. The length of the antenna, L, is calculated from Equation 21-B or Fig. 21-4. The length of section C is computed from:

$$C\ (\text{feet}) = \frac{118}{Freq.\ (\text{MHz})} \qquad \text{21-E}$$

The feeder clearance, E, is found from

$$E\ (\text{feet}) = \frac{148}{Freq.\ (\text{MHz})} \qquad \text{21-F}$$

Example: For a frequency of 7.1 MHz, the length

$L = \frac{468}{7.1} = 65.91$ feet, or 65 feet 11 inches.

$C = \frac{118}{7.1} = 16.62$ feet, or 16 feet 7 inches.

$E = \frac{148}{7.1} = 20.84$ feet, or 20 feet 10 inches.

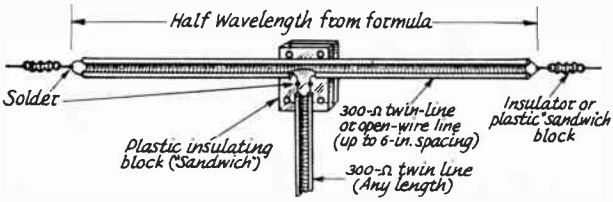

Fig. 21-9 – The construction of an open-wire or twin-line folded dipole fed with 300-ohm line. The length of the antenna is calculated from Equation 21-B or Fig. 21-4.

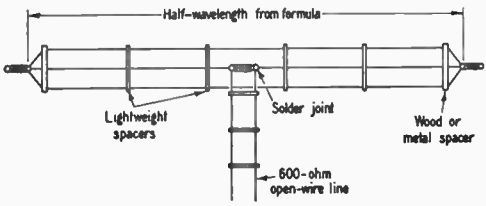

Fig. 21-10 — The construction of a 3-wire folded dipole is similar to that of the 2-wire folded dipole. The end spacers may have to be slightly stronger than the others because of the greater compression force on them. The length of the antenna is obtained from Equation 21-B or Fig. 21-4. A suitable line can be made from No. 14 wire spaced 5 inches, or from No. 12 wire spaced 6 inches.

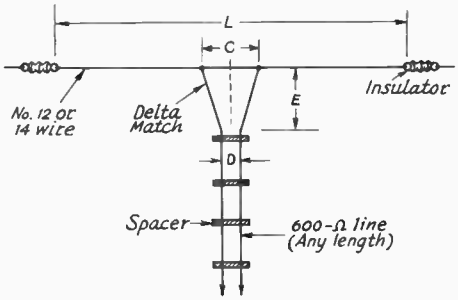

Fig. 21-11 — Delta-matched antenna systems. The dimensions, C, D, and E are found by formulas given in the text. It is important that the matching section, E, come straight away from the antenna.

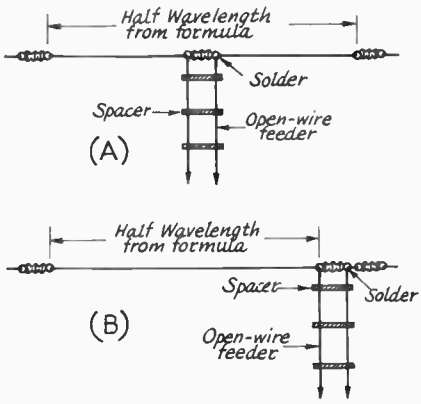

Fig. 21-12 — The half-wave antennas can be fed at the center or at one end with open-wire feeders. The length of the antennas can be computed from Equation 21-B or Fig. 21-4.

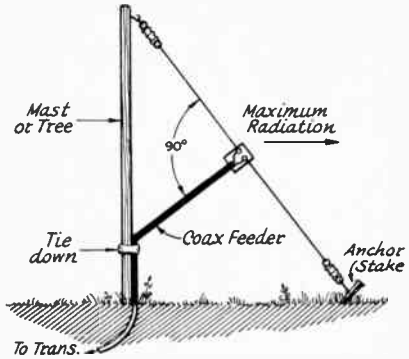

Fig. 21-13 — Method of supporting a half-wave dipole from a single upright such as a tree or wooden mast. Maximum directivity will be in the direction of the arrow, and the signal will be vertically polarized at a fairly low radiation angle. By having anchor stakes at different compass points, the directivity can be changed to favor different DX regions.

Since the equations hold only for 600-ohm line, it is important that the line be close to this value. This requires 5-inch spaced No. 14 wire, 6-inch spaced No. 12 wire, or 3 3/4-inch spaced No. 16 wire.

If a half-wavelength antenna is fed at the center with other than 75-ohm line, or if a two-wire dipole is fed with other than 300-ohm line, standing waves will appear on the line and coupling to the transmitter may become awkward for some line lengths, as described in Chapter 20. However, in many cases it is not convenient to feed the half-wave antenna with the correct line (as is the case where multiband operation of the same antenna is desired), and sometimes it is not convenient to feed the antenna at the center. Where multiband operation is desired (to be discussed later) or when the antenna must be fed at one end by a transmission line, an open-wire line of from 450 to 600 ohms impedance is generally used. The impedance at the end of a half-wavelength antenna is in the vicinity of several thousand ohms, and hence a standing-wave ratio of 4 or 5 is not unusual when the line is connected to the end of the antenna. It is advisable, therefore, to keep the losses in the line as low as possible. This requires the use of ceramic or Micalex feeder spacers, if any appreciable power is used. For low-power installations in dry climates, dry wood spacers boiled in paraffin are satisfactory. Mechanical details of half wavelength antennas fed with open-wire lines are given in Fig. 21-12.

THE "INVERTED V" ANTENNA

A popular nondirectional antenna is the so-called "inverted V" or "drooping doublet." Its principal advantages are that it requires but one supporting structure, and that it exhibits more or less omnidirectional radiation characteristics when cut for a single band. The multiband version of Fig. 21-14 is somewhat directional above 7 MHz, off the ends (not broadside) of the antenna. This is because the legs of the "V" are long in terms of wavelength at 14, 21 and 28 MHz. The antenna offers a good compromise between vertical and horizontal polarization, thus making it effective for local as well as DX communications. Its low-angle radiation compares favorably with that of a full-

MULTIBAND "INVERTED V"

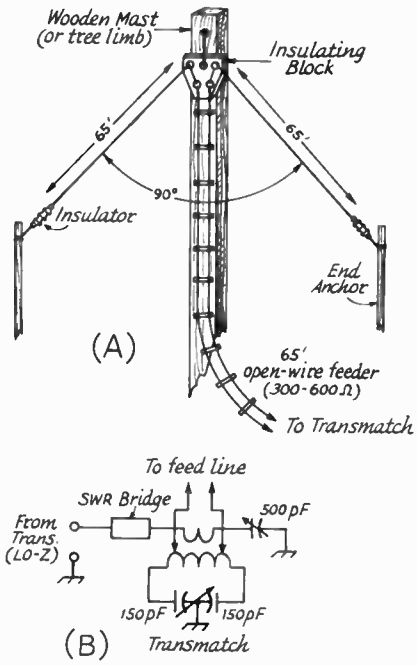

Fig. 21-14 — Details for an Inverted-V antenna (sometimes called a "drooping doublet"). At A, a wooden mast supports the antenna at its center. Open-wire feeders permit the antenna to be used for multiband operation. If this is done, a Transmatch of the type shown at B should be used to tune the system to resonance, and to match the feeder to the transmitter and receiver.

size one quarter wavelength vertical worked against ground. When fed as shown in Fig. 21-14 it serves as an excellent multiband antenna.

For single-band operation the "V" is cut to the same length as a half-wavelength doublet, and is fed with 52-ohm coaxial line. Its center (feed point) should be as high above ground as possible, preferably one-quarter wavelength or more at the operating frequency. The apex angle should be as close to 90 degrees as possible, but in practice any angle between 90 and 120 degrees provides good results. Less than a 90-degree angle causes excessive cancellation of the signal, and should be avoided.

Though some operators have reported satisfactory results when supporting the "V" from a metal mast or tower, it is best to use a wooden mast to keep the field of the antenna unobstructed. Good results can be had by supporting the center of the antenna from a limb on a tall tree, provided the area below the limb is completely open.

Single-band, coax-fed inverted Vs will normally require some pruning to make them resonant at the desired frequency. The standard doublet formula is recommended for a starting point, but because the ends of the "V" are normally in close proximity to ground this antenna will be slightly shorter than a horizontal dipole. No formula can be given because of the variations in the ground properties in different areas. Also, the actual height above ground in a particular installation, plus the proximity of the ends of the antenna to nearby objects, will have a marked effect upon resonance. The best way to tune the antenna is to insert an SWR bridge in the coax feed line and prune an inch at a time off each end of the "V" until the lowest SWR is obtained.

LONG-WIRE ANTENNAS

An antenna is a long wire only when it is long *in terms of wavelength.* An antenna, simply because it is a long piece of wire is not a long-wire antenna. Space permitting, these antennas are effective for DX work, and when erected high above ground offer considerable power gain over a dipole. The longer the antenna, the greater the gain. Maximum directivity occurs off the ends of the antenna, and not off the broad side of it. A long-wire antenna, unless terminated at the far end in its characteristic impedance by a noninductive resistance, is bidirectional. A terminated long wire is directional only off the terminated end. This antenna radiates minor lobes at many wave angles in the vertical and horizontal planes. The longer the wire, the greater and more complex the lobes become. It is not uncommon to find a long-wire antenna outperforming a beam antenna on DX contacts under certain propagation conditions. This is because it can respond to a variety of incoming wave angles (and can radiate a signal in a like manner), which is not the case with a well-designed beam-type antenna.

Long-Wire Characteristics

An antenna will be resonant so long as an integral number of standing waves of current and voltage can exist along its length; in other words, so long as its length is some integral multiple of a half wavelength.

Current and Voltage Distribution

Fig. 21-15 shows the current and voltage distribution along a wire operating at its fundamental frequency (where its length is equal to a half wavelength) and at its second, third, and fourth harmonics. For example, if the fundamental frequency of the antenna is 7 MHz, the current and voltage distribution will be as shown at A. The same antenna excited at 14 MHz would have current and voltage distribution as shown at B. At 21 MHz, the third harmonic of 7 MHz, the current and voltage distribution would be as in C; and at 28 MHz, the fourth harmonic, as in D. The number of the harmonic is the number of half waves

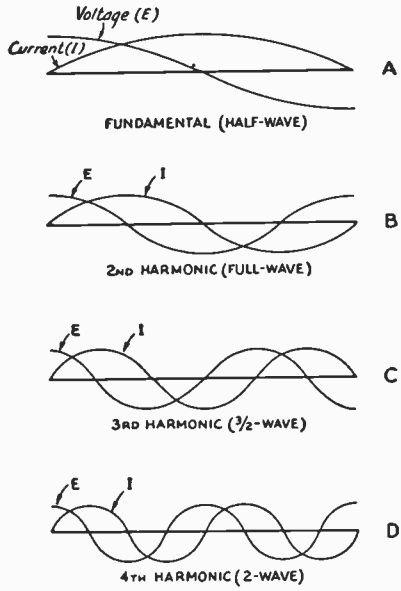

Fig. 21-15 — Standing-wave current and voltage distribution along an antenna when it is operated at various harmonics of its fundamental resonant frequency.

contained in the antenna at the particular operating frequency.

The polarity of current or voltage in each standing wave is opposite to that in the adjacent standing waves. This is shown in the figure by drawing the current and voltage curves successively above and below the antenna (taken as a zero reference line), to indicate that the polarity reverses when the current or voltage goes through zero. Currents flowing in the same direction are *in phase*; in opposite directions, *out of phase.*

Physical Lengths

The length of a long-wire antenna is not an exact multiple of that of a half-wave antenna because the end effects operate only on the end sections of the antenna; in other parts of the wire these effects are absent, and the wire length is approximately that of an equivalent portion of the wave in space. The formula for the length of a long-wire antenna, therefore, is

$$\textit{Length}\ (\text{feet}) = \frac{492\,(N-0.05)}{\textit{Freq.}\ (\text{MHz})} \qquad \text{21-G}$$

where N is the number of *half*-waves on the antenna.

Example: An antenna 4 half-waves long at 14.2 MHz would be

$$\frac{492\,(4-0.05)}{14.2} = \frac{492 \times 3.95}{14.2}$$

$$= 136.7 \text{ feet, or } 136 \text{ feet } 8 \text{ inches}$$

It is apparent that an antenna cut as a half wave for a given frequency will be slightly off resonance at exactly twice that frequency (the second harmonc), because of the decreased influence of the end effects when the antenna is more than one-half wavelength long. The effect is not very important, except for a possible unbalance in the feeder system and consequent radiation from the feed line. If the antenna is fed in the exact center, no unbalance will occur at any frequency, but end-fed systems will show an unbalance on all but one frequency in each harmonic range.

Impedance and Power Gain

The radiation resistance as measured at a current loop becomes higher as the antenna length is increased. Also, a long-wire antenna radiates more power in its most favorable direction than does a half-wave antenna in its most favorable direction. This power gain is secured at the expense of radiation in other directions. Fig. 21-16 shows how the radiation resistance and the power in the lobe of maximum radiation vary with the antenna length.

Directional Characteristics

As the wire is made longer in terms of the number of half wavelengths, the directional effects change. Instead of the "doughnut" pattern of the half-wave antenna, the directional characteristic splits up into "lobes" which make various angles with the wire. In general, as the length of the wire is increased the direction in which maximum radiation occurs tends to approach the line of the antenna itself.

Methods of Feeding

In a long-wire antenna, the currents in adjacent half-wave sections must be out of phase, as shown in Fig. 21-15. The feeder system must not upset this phase relationship. This is satisfied by feeding the antenna at either end or at any current loop. A two-wire feeder cannot be inserted at a current node, however, because this invariably brings the currents in two adjacent half-wave sections in phase. A long-wire antenna is usually made a half wavelength at the lowest frequency and fed at the end.

MULTIBAND ANTENNAS

One of the most simple antenna systems for multiband use is one which is a half wavelength long at the lowest operating frequency, and which is fed either at the center, or at one end with open-wire tuned feeders, Fig. 21-12. The center-fed system is superior to the end-fed type in that it will have less feeder radiation, but the end-fed variety is often more practical from an installation viewpoint. The center-fed antenna will not have the same radiation pattern as an end-fed one of the same length, except on frequencies where the length of the antenna is a half wavelength. The end-fed antenna acts like a long-wire antenna on all bands (for which it is longer than a half wavelength), but the center-fed one acts like two antennas of half that length fed in phase. For

TABLE 21-I

Multiband Tuned-Line-Fed Antennas

Antenna Length (Ft.)	*Feeder Length (Ft.)*	*Band*	*Type of Coupling Circuit*
With end feed:			
135	45	3.5–21	Series
		28	Parallel
67	45	7–21	Series
		28	Parallel
With center feed:			
135	42	3.5–21	Parallel
		28	Series
135	77 1/2	3.5–28	Parallel
67	42 1/2	3.5	Series
		7–28	Parallel
67	65 1/2	3.5,14,28	Parallel
		7,21	Series

Antenna lengths for end-fed antennas are approximate and should be cut to formula length at favorite operating frequency.

Where parallel tuning is specified, it will be necessary in some cases to tap in from the ends of the coil for proper loading – see Chapter 20 for examples of antenna couplers.

example, if a full-wavelength antenna is fed at one end, it will have a radiation pattern somewhat like a four-leaf clover. With either of these multiband antennas the SWR will never be 1, but these antennas will be efficient provided low-loss tuned feeders are used.

Since multiband operation of an antenna does not permit matching of the feed line, some attention should be paid to the length of the feed line if convenient transmitter-coupling arrangements are to be obtained. Table 21-I gives some suggested antenna and feeder length for multiband operation. In general, the length of the feed line can be other than that indicated, but the type of coupling circuit may change.

Since open-wire line is recommended for this antenna, TV-type (open-wire) 300- or 450-ohm feeders are satisfactory. Home made open-wire line can be made up from lengths of No. 14 or 12 soft-drawn copper wire. The spacers can be made from Plexiglas strips or similar low-loss material. Some amateurs have had success using plastic hair curlers or plastic clothespins. Any line spacing from 1 to 6 inches will give satisfactory results since the line impedance is not an important consideration with this antenna.

If antenna space is at a premium, a shortened version of the multiband antenna can be erected. The feeders are lengthened, and the flat-top portion is shortened as shown in Fig. 21-17. The antenna can be as short as a quarter wavelength long, but will still radiate fairly well if tuned to resonance. This method will not give as good results as the full-size version, but will still be useful. A Transmatch tuner of the type described in Chapter 20 can be used with this system.

MULTIBAND OPERATION WITH COAXIAL LINE FEED

The proper use of coaxial line requires that the standing-wave ratio be held to a low value, preferably below 3:1. Since the impedance of an ordinary antenna changes widely from band to band, it is not possible to feed a simple antenna with coaxial line and use it on a number of bands without tricks of some kind. One exception to this is the use of 75-ohm coaxial line to feed a 7-MHz half-wave antenna, as in Fig. 21-18; this antenna can also be used on 21 MHz and the SWR in the line will not run too high.

However, the diagram shows a separate dipole element for 21-MHz use. Though the 7-MHz element will operate as a 1 1/2 wavelength doublet on 21 MHz, and will present a low impedance feed point at its center, some may wish to add a separate dipole for 21-MHz operation. This antenna is capable of radiating harmonics from the transmitter, so it is important to make sure the transmitter output is clean. A coax-to-coax type antenna coupler can also be installed at the transmitter end to help reduce harmonic radiation from the antenna.

A MULTIBAND "TRAP" ANTENNA

Another method of obtaining multiband operation from a single antenna, with a single feed line, is the use of parallel-tuned traps in each leg of a two-wire doublet. If the traps are installed in the right points of the antenna they "divorce" the remainder of the antenna from the center portion as the transmitter is changed to operate a higher

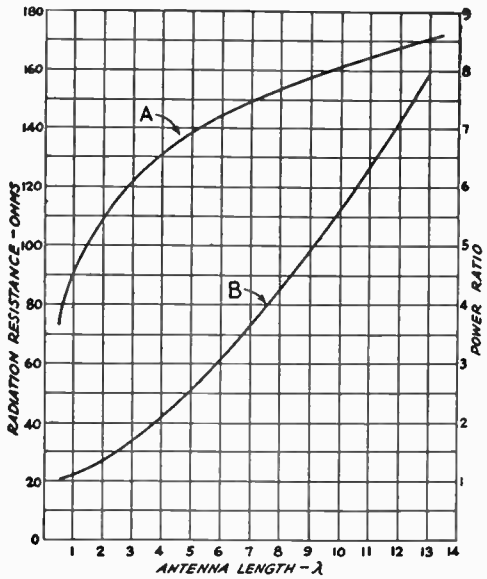

Fig. 21-16 – Curve A shows variation in radiation resistance with antenna length. Curve B shows power in lobes of maximum radiation for long-wire antennas as a ratio to the maximum radiation for a half-wave antenna.

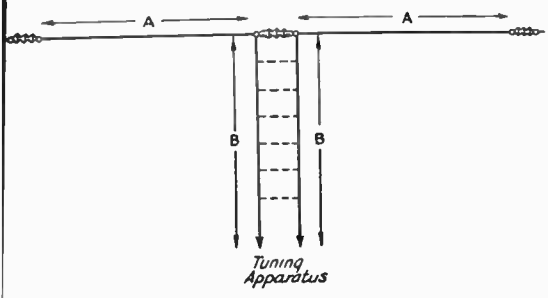

Fig. 21-17 — Practical arrangements of a shortened antenna. When the total length, A + B + B + A, is the same as the antenna length plus twice the feeder length of the center-fed antennas of Table 21-I, the same type of coupling circuit will be used. When the feeder length or antenna length, or both, makes the sum different, the type of coupling circuit may be different but the effectiveness of the antenna is not changed, unless A + A is less than a quarter wavelength.

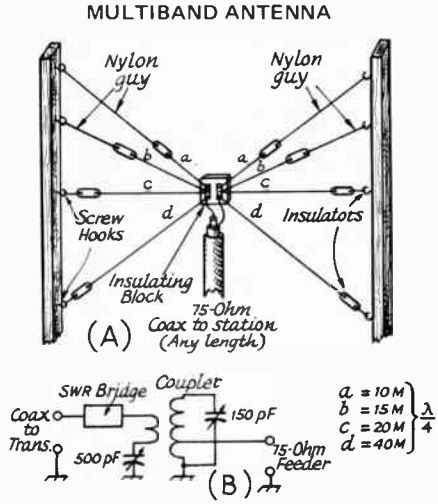

Fig. 21-18 — Illustration of a multiband coax-fed antenna. Wooden support poles are recommended so that they will not interfere with the radiation pattern of the antenna. At B, a representative diagram of a coax-to-coax coupler that will reduce harmonic radiation from the system. It should be installed in the operating room, near the transmitter, and adjusted for a 1:1 SWR.

band. On the lowest operating band the traps act as loading inductors, thus allowing a shorter overall length for the doublet than would be possible if it were cut for use without the traps.

The trap-antenna concept has been adopted by several manufacturers who produce multiband beam antennas, multiband doublets, and vertical antennas for several bands of operation.

The antenna of Fig. 21-19 may be of interest to those amateurs not having sufficient room to erect a full-size 80-meter doublet. The overall length of this system is 106 feet. If need be, the ends can be bent slightly downward so that the horizontal portion will occupy even less space. It is best, however, to keep the entire antenna horizontal if possible. The antenna is fed with 75-ohm coax, or balanced line of the same impedance. The latter is recommended, or system balance can be enhanced by using a 1:1 balun transformer at the feed point if coaxial line is used. This antenna is an adaptation of the W3DZZ design described in the *ARRL Antenna Book.*

As shown in Fig. 21-20, each trap is literally built around a "strain" insulator. With this insulator, the hole at one end is at right angles to the hole at the opposite end, and the wires are fastened as illustrated in Fig. 21-21. This style of insulator has greater compressive strength than tensile strength and will not permit the antenna to fall should the insulator break. There is plenty of space inside the inductor to install the insulator and the trap capacitor. The plastic protective covers are not essential, but are used to protect the traps from ice, snow, and soot which could cause a deterioration in performance.

Electrically, each trap consists of a 50-pF capacitor which is shunted by a 10-μH inductor. A Centralab 850S-50Z capacitor is used. It is rated at 7500 volts, and should safely handle a kilowatt. Miniductor coil stock is used for the inductor. Those wishing to optimize the antenna for a specific portion of the 40-meter band can experimentally adjust the number of turns in the trap coil for resonance in the desired segment. Similarly, the end sections of the dipole can be adjusted for lowest SWR in the portion of the 80-meter band most favored. With the dimensions given in Fig. 21-19, the antenna performs well from 3.5 to 30 MHz. The lowest SWR on 80

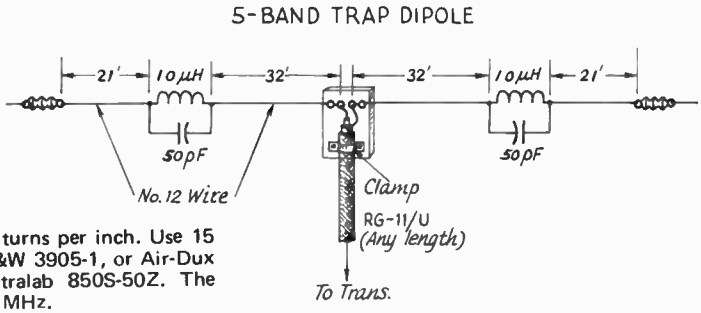

Fig. 21-19 — Sketch of a trap dipole for use on 80 through 10 meters. SWR on all of the bands is less than 2.5:1. With the dimensions given here the SWR rises at each end of the 80-meter band, but is approximately 1.5:1 at the center of the band. The 10-μH trap coils consist of 15 turns No. 12 wire, 2 1/2 inches in diameter, 6 turns per inch. Use 15 turns from Polycoils No. 1774, B&W 3905-1, or Air-Dux 2006T. Trap capacitors are Centralab 850S-50Z. The traps are tuned to resonance at 7.1 MHz.

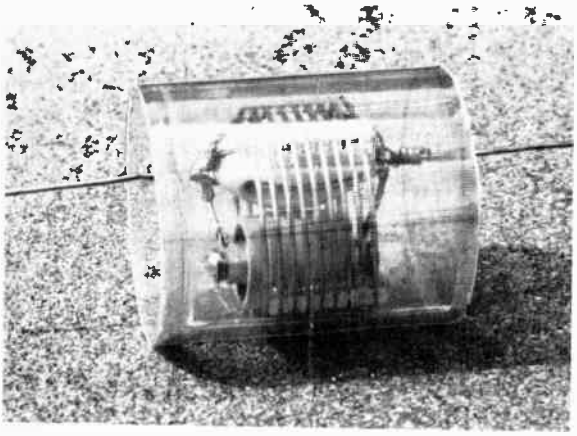

Fig. 21-20 — Photo of a typical trap. The unit shown here is cut for resonance at 14 MHz, but construction techniques are the same as for the traps used in the antenna of Fig. 21-19. A weatherproof cover can be made from plastic tubing, sheeting which is heated and formed, or from a plastic refrigerator container. The capacitor and strain insulator are inside the coil.

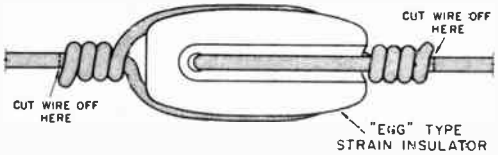

Fig. 21-21 — Method of connecting the antenna wire to the strain insulator. The antenna wire is cut off close to the wrap.

meters occurs at midband. SWR on all other bands is less than 2.5 to 1, an acceptable figure for all but the most critical operator. Most modern-day transmitters will load into this antenna without difficulty.

Trap Adjustment

As a preliminary step, loops of No. 12 wire are fitted to one of the egg insulators in the normal manner (see Fig. 21-21), except that after the wraps are made, the end leads are snipped off close to the wraps. A capacitor is then placed in position and bridged with short leads across the insulator and soldered sufficiently to provide temporary support. The combination is then slipped inside about 10 turns of the inductor, one end of which should be soldered to an insulator-capacitor lead. Adjustment to the resonant frequency can now proceed, using a grid-dip meter.

Coupling between the GDO and the trap should be very loose. To assure accuracy, the station receiver should be used to check the GDO frequency. The inductance should be reduced 1/4 turn at a time. If one is careful, the resonant frequency can easily be set to within a few kilohertz of the chosen figure.

The reason for snipping the end leads close to the wraps and the inclusion of the loops through the egg insulator soon becomes apparent. The resonant frequency of the capacitor and inductor alone is reduced about 10 kHz per inch of end lead length and about 150 kHz by the insulator loops. The latter add approximately 2 pF to the fixed capacitor value.

Assembly

Having determined the exact number of inductor turns, the trap is taken apart and reassembled with leads of any convenient length. One may, of course, connect the entire lengths of the antenna sections to the trap at this time, if desired. But, if more convenient, a foot or two of wire can be fastened and the remaining lengths soldered on just before the antenna is raised.

The protective covers are most readily formed by wrapping two turns (plus an overlap of 1/2 inch) of 0.020-inch polystyrene or Lucite sheeting around a 3-inch plastic disk held at the center of the cylinder so formed. The length of the cover should be about 4 inches. A very small amount of plastic solvent (a cohesive cement that actually softens the plastic surfaces) should then be applied under the edge of the overlap and the joint held firmly for about two minutes to insure a strong, tight seal. The disk is pushed out and the inner seam of the sheeting sealed.

The trap is then placed in the plastic cylinder and the end disks marked where the antenna wires are to pass through. After drilling these holes, the disks are slipped over the leads, pressed into the ends of the cylinder and a small amount of solvent applied to the periphery to obtain a good seal.

Some air can flow in and out of the trap through the antenna-wire holes, and this will prevent the accumulation of condensation.

AN END-FED HERTZ

One of the more simple multiband antennas is the end-fed Hertz of Fig. 21-22. It consists of an end-fed length of No. 12 wire, 130 feet long. This type of antenna performs in the same manner as the end-fed half-wave system of Fig. 21-12B, but has no feeder. One end of the wire connects directly into an L-network impedance matcher, as shown in the diagram. This type of antenna is very convenient for those who have their stations on the top floor of the house, thus enabling the user to bring one end of the antenna in through a window and to the coupler. Ideally, the entire antenna should be in a horizontal plane for best results. However, either end can be bent to make the system fit into whatever space is available. First-floor dwellers can drop the fed end of the wire to the window of the radio room, as shown in Fig. 21-22A. Or, the wire can be kept straight and rise diagonally to the support at the far end. Height is important with antennas of this type, so an effort should be made to get the system as high above ground as possible, and clear of power lines and other structures.

This antenna is intended for operation from 3.5 to 28 MHz. A coupler of the kind shown in Fig. 21-43 (L-Network Coupler) will match the antenna on all of the hf amateur bands mentioned. It will also perform well as an end-fed quarter wavelength on 1.8 MHz if the reactance is tuned out by means

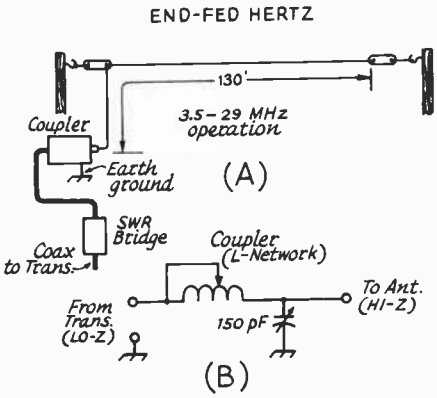

Fig. 21-22 — Diagram of an end-fed Hertz. It is cut for the lowest desired operating frequency (1/2 wavelength), and is operated on its harmonic frequencies on the remaining bands above. An L-network is used to match it to 50- or 75-ohm unbalanced transmitter terminals. At B, schematic representation of an L-network tuner. The value of L and C is adjusted until a 1:1 match is obtained.

of a 1500-pF series variable capacitor. A good earth ground will be needed for proper operation on 1.8 MHz. For hf-band use, a good earth ground is also important in order to keep unwanted rf voltages from appearing on the transmitter and receiver chassis. No one wants (or needs) a "hot" key or microphone. Sometimes a good water-pipe ground is sufficient for preventing rf potentials on the equipment.

It must be remembered that the ends of this antenna are voltage points (high impedance), and bringing the end of the antenna into the "shack" can often introduce rf into the equipment as mentioned. During phone operation the rf can get into the microphone circuit and cause howling and hum if the ground system is not used. Similarly, the operation of some electronic keyers can be made erratic by the introduction of rf chassis currents. The operator, therefore, may wish to locate the tuner at the window and have the ham station across the room at some distant point. If this is done, coaxial cable can be used to connect the station to the tuner. Operation with this antenna at W1CKK has been without problems for nearly three years, operating all bands with a kilowatt of power. The fed end of the wire is three feet from the station equipment. A water pipe and an earth ground are used. The L network provides a 1:1 match on all of the bands, and DX operation has been quite successful on the 20-, 15- and 10-meter bands. While using a parallel-tuned antenna coupler, successful 6- and 2-meter operation has been realized.

It should be remembered that the antenna will perform as a long wire on those bands above 3.5 MHz. At the higher end of the hf range – particularly 15 and 10 meters – the antenna will tend to be directional off its ends (bidirectional), and will begin to have some gain. It exhibits more or less omnidirectional characteristics on 7 and 14 MHz, the pattern being somewhat like the shape of a four-leaf clover. There will not be much directivity on 3.5 MHz unless the antenna is at least a half wavelength above ground at that frequency.

A BROAD-BAND DIPOLE

Most untuned doublet antennas are not broad enough to provide a low SWR across an entire amateur band. This is a particularly troublesome situation on the 80- and 40-meter bands. The antenna of Fig. 21-23, sometimes called a "double-bazooka" antenna, was developed by the staff of M.I.T. for radar use, and was later popularized by W8TV for amateur use (*QST*, July 1968). An 80-meter version of this system, cut for

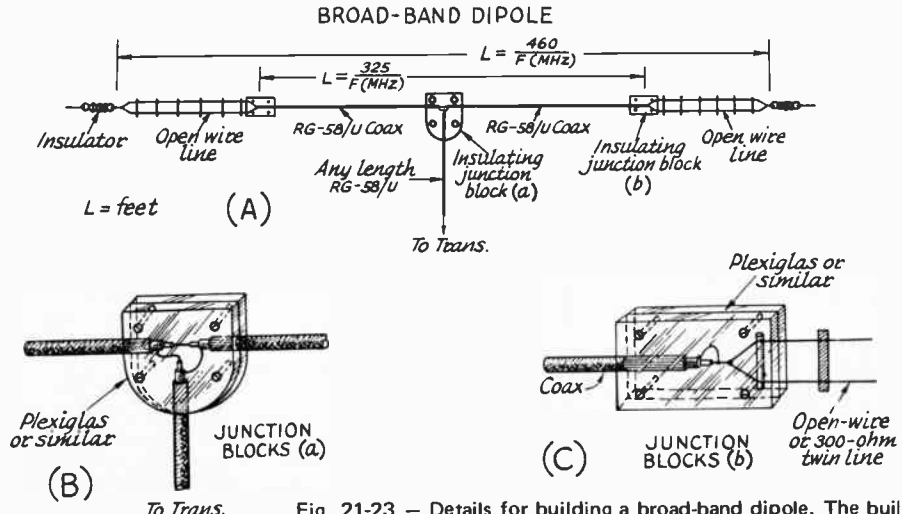

Fig. 21-23 — Details for building a broad-band dipole. The builder may choose to employ other methods for joining the sections, but the illustrations at B and C represent one of the better, more secure techniques.

3.7 MHz, provides an SWR of less than 2:1 across the entire band, and shows a 1:1 reading at 3.7 MHz. SWR at 3.5 MHz is 1.7:1, and is 1.9:1 at 4 MHz.

The antenna consists of a half-wavelength section of coax line with the sheath opened at the center and the feed line attached to the open ends of the sheath. The *outside* conductor of the coax thus acts as a half-wave dipole, in combination with the open-wire end sections of the antenna. The inside sections, which *do not* radiate, are quarter-wave shorted stubs which present a very high resistive impedance to the feed point at resonance. At frequencies off resonance the stub reactance changes in such a way as to tend to cancel the antenna reactance, thus increasing its bandwidth. This antenna can be cut for any operating frequency, including that of the 160-meter band. Formulas are given in Fig. 21-23. RG-58/U coax line is capable of handling a full kilowatt from the transmitter with the SWR figures given earlier. Details are given for making up the junction blocks where connections are made. Other construction techniques are possible, and this will be pretty much up to the builder. If the plastic blocks of Fig. 21-23 are used, their inner surfaces can be grooved to provide a snug fit for the coax cables when the two halves are bolted together. After assembly, the mating outer surfaces of the junction blocks can be sealed with epoxy cement to assure a weatherproof bond. This antenna can be mounted from a single center support and used as an "inverted V" if desired. Single-wire end sections can be substituted for the open-wire stubs, but the open-wire sections contribute to the antenna's broadband characteristics.

VERTICAL ANTENNAS

A vertical quarter-wavelength antenna is often used in the lower-frequency amateur bands to obtain low-angle radiation. It is also used when there isn't enough room for the supports for a horizontal antenna. For maximum effectiveness it should be located free of nearby objects and it should be operated in conjunction with a good ground system, but it is still worth trying where these ideal conditions cannot be obtained.

Four typical examples and suggested methods for feeding a vertical antenna are shown in Fig. 21-24. The antenna may be wire or tubing supported by wood or insulated guy wires. When tubing is used for the antenna, or when guy wires (broken up by insulators) are used to reinforce the structure, the length given by the formula is likely to be long by a few percent. A check of the standing-wave ratio on the line will indicate the frequency at which the SWR is minimum, and the antenna length can be adjusted accordingly.

A good ground connection is necessary for the most effective operation of a vertical antenna (other than the ground-plane type). In some cases a short connection to the cold-water system of the house will be adequate. But maximum performance usually demands a separate ground system. A single 4- to 6-foot ground rod driven into the earth at the base of the antenna is usually not sufficient, unless the soil has exceptional conductivity. A minimum ground system that can be depended upon is 6 to 12 quarter-wavelength radials laid out as the spokes of a wheel from the base of the antenna. These radials can be made of heavy aluminum wire, of the type used for grounding TV antennas, buried at least 6 inches in the ground. This is normally done by slitting the earth with a spade and pushing the wire into the slot, after which the earth can be tamped down.

The examples shown in Fig. 21-24 all require an antenna insulated from the ground, to provide for the feed point. A *grounded* tower or pipe can be used as a radiator by employing "shunt feed," which consists of tapping the inner conductor of the coaxial-line feed up on the tower until the best match is obtained, in much the same manner as the "gamma match" (described later) is used on a horizontal element. If the antenna is not an electrical quarter wavelength long, it is necessary to tune out the reactance by adding capacitance or inductance between the coaxial line and the shunting conductor. A metal tower supporting a TV antenna or rotary beam can be shunt fed only if all of the wires and leads from the supported antenna run down the center of the tower and underground away from the tower.

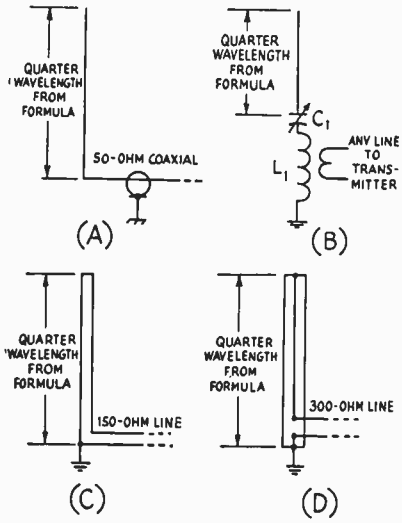

Fig. 21-24 — A quarter-wavelength antenna can be fed directly with 50-ohm coaxial line (A), with a low standing-wave ratio, or a coupling network can be used (B) that will permit a line of any impedance to be used. In (B), L1 and C1 should resonate to the operating frequency and L1 should be larger than is normally used in a plate tank circuit at the same frequency. By using multiwire antennas, the quarter-wave vertical can be fed with (C) 150- or (D) 300-ohm line.

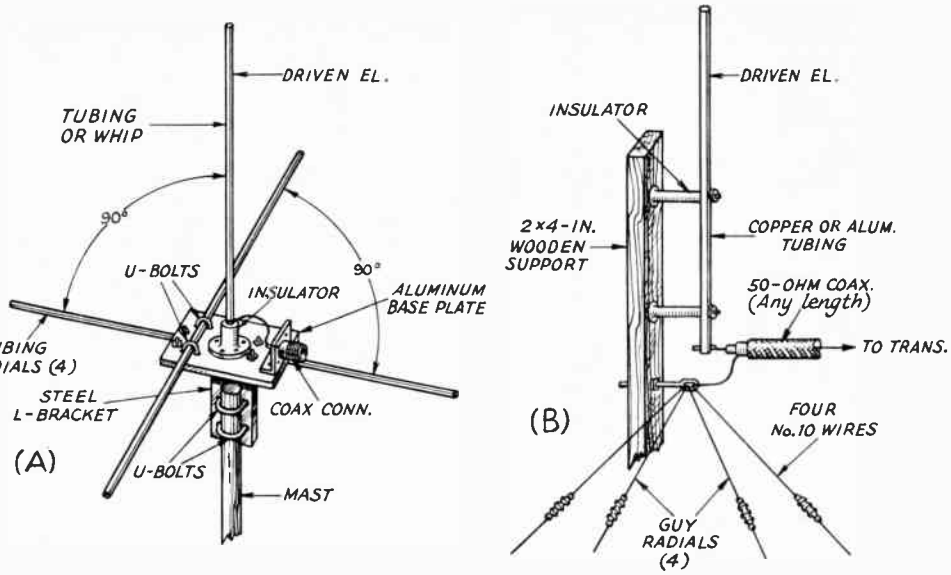

Fig. 21-25 — All-metal construction of a vertical ground-plane antenna can be effected as shown at A. The driven element is insulated from the remainder of the system, but the tubing radials are common to the mounting plate, and to one another. The outer conductor of the coax connects to the base plate and radials. The center conductor of the feed line attaches to the base of the driven element with as short a lead as possible. If a metal mast is used, it, too, can be common to the base plate and radials. At B, the radials are made of No. 10 wire (approximately 5 percent longer than the resonant vertical element) and are used as guy wires. Drooping the wires at a 45-degree angle raises the feed-point impedance to approximately 50 ohms for direct connection to RG-8/U.

THE GROUND-PLANE ANTENNA

A ground-plane antenna is a vertical quarter-wavelength antenna using an artificial metallic ground, usually consisting of four rods or wires perpendicular to the antenna and extending radially from its base, Fig. 21-25. Unlike the quarter-wavelength vertical antennas without an artificial ground, the ground-plane antenna will give low-angle radiation regardless of the height above actual ground. However, to be a true ground-plane antenna, the plane of the radials should be at least a quarter-wavelength above ground. Despite this one limitation, the antenna is useful for DX work in any band below 30 MHz.

The vertical portion of the ground-plane antenna can be made of self-supported aluminum tubing, or a top-supported wire, depending upon the necessary length and the available supports. The radials are also made of tubing or heavy wire depending upon the available supports and necessary lengths. They need not be exactly symmetrical about the base of the vertical portion.

The radiation resistance of a ground-plane antenna varies with the diameter of the vertical element. The radiation resistance is usually in the vicinity of 30 ohms, and the antenna can be fed with 75-ohm coaxial line with a quarter-wavelength section of 50-ohm line between line and antenna. For multiband operation, a ground-plane antenna can be fed with tuned open-wire line, or the vertical section can be quarter-wavelength pieces for each band. The radials should be a quarter wavelength at the lowest frequency.

A MULTIBAND VERTICAL

The antenna shown in Fig. 21-26 is a simple multiband system employing a Transmatch at the base. If the antenna is made at least 27 feet long, it can be used on the 80- through 10-meter bands. The matching systems shown in Fig. 21-26 at B can be used or the Transmatch described in the previous chapter will provide good matching. The vertical can also be made from wire, rather than tubing. If wire is used, it could be mounted on a mast, preferably made from a nonconducting material such as wood.

A buried radial system of the kind discussed earlier is mandatory if good performance is to be had. At least four (and preferably more) buried wires should extend outward, radially, from the base of the antenna. They should be cut to one-quarter wavelength for the lowest proposed operating frequency. A metal ground rod can be driven into the earth near the base of the antenna, and the radial wires connected to it. The outer conductor of the coaxial feeder should be bonded to the radial system. The coax line can be buried under the ground if desired, but should be a weatherproof type if this is done.

The tuning network can be made plug-in-coil style, or a band-switching arrangement can be utilized. A sophisticated approach might be to include remote switching and tuning from the operating position. The tuning system should be housed in a weatherproof box at the base of the antenna.

The tuning network consists of a tapped

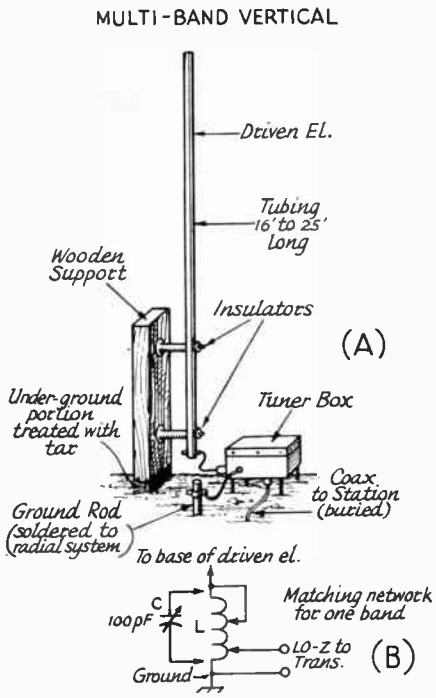

Fig. 21-26 — Details for constructing a multiband vertical. A treated piece of 2 X 4-inch wood can be set in the ground and used as a support for the driven element. A weatherproof metal box houses the tuning network, and is located near the base of the vertical. A ground rod connects to the buried radials, and is also placed near the base of the antenna. At B, a schematic diagram of the tuning network required for the antenna. Its adjustment is covered in the text.

inductance which is adjusted with the aid of an SWR meter to provide a 1:1 match at the operating frequency. In some instances it may be necessary to connect a small amount of capacitance in parallel with the inductor to secure a low SWR. As with any tuning network some cut-and-try effort is necessary to arrive at a set of final adjustments. If band switching is to be used, a fixed capacitor of the proper value can be used in place of the variable once the required value is determined. For best results the inductor should have large-diameter wire with the turns spaced. This will make adjustment less difficult, and the larger coils will improve the *Q* of the tuning network. Large Miniductor stock, or 1/4-inch diameter copper tubing is recommended. The antenna is a low-angle radiator, and can give good results on ground-wave and DX contacts.

A TRAP VERTICAL FOR 40 THROUGH 10 METERS

The trap-antenna concept can be applied to verticals as well as to horizontal systems of the kind described earlier in the chapter. Such an antenna is illustrated in Fig. 21-26, and is designed for use from 7 to 30 MHz. It operates with an SWR of less than 2:1, and can be used for DX and local work.

Other construction techniques are possible, but the method shown in Fig. 21-27 is simple and inexpensive. The trap assembly should be protected from the weather by enclosing it in a plasting housing, possibly a refrigerator jar or similar.

The trap is built from a section of 2 1/2-inch diameter Miniductor stock, No. 12 wire, 6 turns per inch (B&W 3900-1, Air-Dux 2006T, or Polycoils 1774). The coil has 10 turns, but should be adjusted for resonance, with the capacitor shunted across it, at 14.1 MHz with the aid of a grid-dip meter. This is done before the trap is installed in the antenna system. The capacitor is Centralab 850S-25Z.

Though it is common practice to cut the radials for *each* band of operation, one set (4) can be cut to the lowest operating frequency as shown in the sketch. Performance will not differ markedly from a similar antenna using multiband radials. Here the radials are drooped at a 45-degree angle to raise the feedpoint impedance of the antenna to approximately 50 ohms. The radials also serve as guy wires.

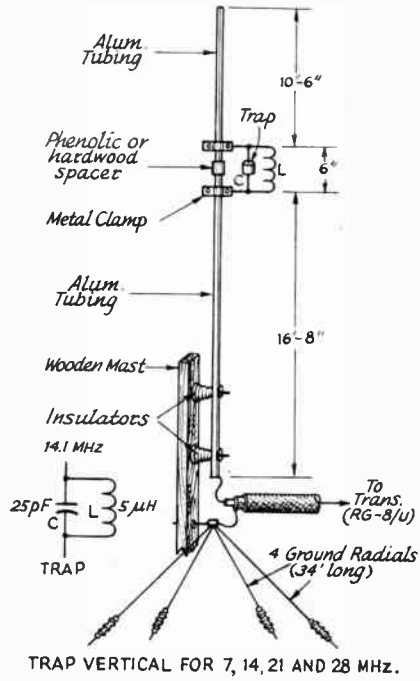

Fig. 21-27 — Diagram of the multiband trap vertical. A wooden mast supports the system, and the driven element is mounted on the mast by means of stand-off insulators. An insulator plug isolates the two sections of tubing. It can be made to fit inside the sections, then secured with screws. Or, it can be bored out for the OD of the tubing and slipped over the outside. If hardwood is used it should be boiled for half an hour in paraffin wax to make it resistant to moisture.

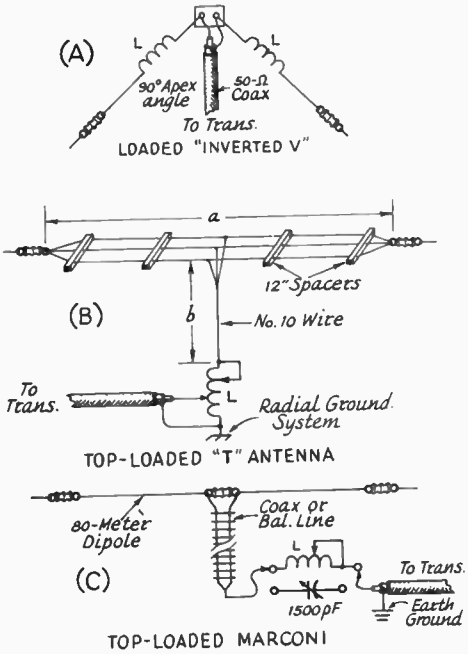

Fig. 21-28 — Illustrations of three vertically polarized short antennas for use on 1.8 to 2 MHz. They are described in the text.

ANTENNAS FOR 160 METERS

Results on 1.8 MHz will depend to a large extent on the type of antenna used and the time of day or night that operations will take place. Almost any random length of wire that is tuned to resonance and matched to the transmitter will give fair results at night. During daylight hours the absorption is high, and such high-angle radiators become ineffective. For this reason a vertically-polarized, low-radiation-angle antenna is best for use on the 160-meter band, day and night. Fig. 21-28 shows three effective 160-meter antennas. At A, a shortened inverted V is made resonant by means of *L*, a loading coil in each leg of the doublet. This antenna will give vertical polarization, and will perform well for day and night use. A full-size inverted V with tuned feeders would be better, even if the voltage ends were but a few inches off the ground. However, when antenna space is at a premium, a 75-meter doublet can be equipped with loading inductors as shown, and the antenna will perform on 1.8 MHz. Two-band operation can be had by merely shorting the loading coils with clip leads during 75-meter use. For use on 1.8 MHz the coils are experimentally pruned, a half turn at a time, until the lowest SWR is obtained.

The antenna at B is nothing more than a top-loaded quarter-wavelength Marconi. The flat-top section, *a*, can be any convenient length – 25 to 50 feet – and should be as high in the air as possible. Its three wires are joined at the ends and center, and a single vertical wire drops down to the loading/matching inductor, *L*. The flat-top section serves as a capacitance hat for the vertical member, *b*. The larger that *a* is made, the less coil will be needed at *L*. A good earth ground is essential to proper performance. A buried radial system is recommended, but if the soil has good conductivity it may be possible to get by with six or eight ground rods driven into the earth, 4 feet apart, and bonded together by means of No. 10 wire. They should be centered around the bottom end of section *b*. There are two taps on *L*. The bottom one is adjusted for a match to the coax feeder. The top tap is adjusted for antenna resonance. There will be some interaction between the adjustments, so several attempts may be necessary before the system is tuned up. Section *b* should be made as long as possible – 30 feet or more – for best results.

An adaptation of the antenna just described is shown at C in Fig. 21-28. Here an 80-meter doublet is used as a quarter-wavelength top-loaded Marconi. The feeders, whether coax or balanced line, are twisted together at the transmitter end and tuned with series *L* or *C*. The method used will depend upon the length of the feed line. Ordinarily, an 80-meter dipole with a quarter wavelength feeder will require the series *C* to tune out reactance. If the feed line is much less than one quarter wavelength, the series *L* will be needed. An SWR bridge should be used during these adjustments. A good earth ground is necessary with this antenna.

Other Antennas

Most of the full-size horizontal and vertical antennas described earlier in this chapter are suitable for 1.8 MHz, too. When space is available for a large antenna one should try to make use of this advantage on "160." The helically-wound short vertical described in the section on "limited-space antennas" should be of interest to the 160-meter operator, too.

DIRECTIVE ARRAYS WITH PARASITIC ELEMENTS

With few exceptions, the antennas described so far in Chapter 21 have unity gain or less, and are either omnidirectional or bidirectional. In order for antennas to have gain and take on directional characteristics they must employ additional elements. Antennas with these properties are commonly referred to as "beam" antennas. This section will deal with the design and characteristics of directional antennas with gain.

Parasitic Excitation

In most of these arrangements the additional elements receive power by induction or radiation

from the driven element generally called the "antenna," and reradiate it in the proper phase relationship to achieve the desired effect. These elements are called *parasitic* elements, as contrasted to the driven elements which receive power directly from the transmitter through the transmission line.

The parasitic element is called a director when it reinforces radiation on a line pointing to it from the antenna, and a reflector when the reverse is the case. Whether the parasitic element is a director or reflector depends upon the parasitic-element tuning, which usually is adjusted by changing its length.

Gain vs. Spacing

The gain of an antenna with parasitic elements varies with the spacing and tuning of the elements and thus for any given spacing there is a tuning condition that will give maximum gain at this spacing. The maximum front-to-back ratio seldom, if ever, occurs at the same condition that gives maximum forward gain. The impedance of the driven element also varies with the tuning and spacing, and thus the antenna system must be tuned to its final condition before the match between the line and the antenna can be completed. However, the tuning and matching may interlock to some extent, and it is usually necessary to run through the adjustments several times to insure that the best possible tuning has been obtained.

Two-Element Beams

A 2-element beam is useful where space or other considerations prevent the use of the larger structure required for a 3-element beam. The general practice is to tune the parasitic element as a reflector and space it about 0.15 wavelength from the driven element, although some successful antennas have been built with 0.1-wavelength spacing and director tuning. Gain *vs.* element spacing for a 2-element antenna is given in Fig. 21-29, for the special case where the parasitic element is resonant. It is indicative of the performance to be expected under maximum-gain tuning conditions.

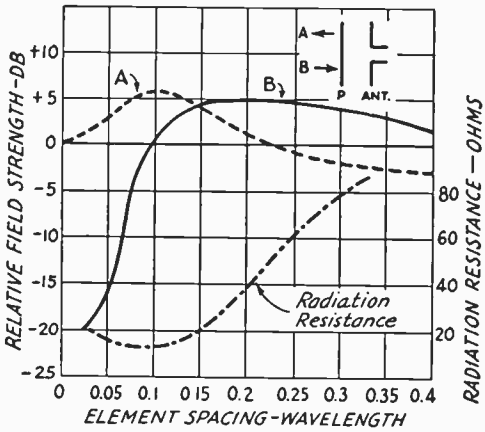

Three-Element Beams

A theoretical investigation of the 3-element case (director, driven element and reflector) has indicated a maximum gain of slightly more than 7 dB. A number of experimental investigations have shown that the optimum spacing between the driven element and reflector is in the region of 0.15 to 0.25 wavelength, with 0.2 wavelength representing probably the best overall choice. With 0.2-wavelength reflector spacing, Fig. 21-30, shows the gain variation with director spacing. It is obvious that the director spacing is not especially critical, and that the overall length of the array (boom length in the case of a rotatable antenna) can be anywhere between 0.35 and 0.45 wavelength with no appreciable difference in gain.

Wide spacing of both elements is desirable not only because it results in high gain but also because adjustment of tuning or element length is less critical and the input resistance of the driven element is higher than with close spacing. The latter feature improves the efficiency of the antenna and makes a greater bandwidth possible. However, a total antenna length, director to reflector, of more than 0.3 wavelength at frequencies of the order of 14 MHz introduces considerable difficulty from a constructional standpoint, so lengths of 0.25 to 0.3 wavelength are frequently used for this band, even though they are less than optimum.

In general, the gain of the antenna drops off less rapidly when the reflector length is increased beyond the optimum value than it does for a corresponding decrease below the optimum value. The opposite is true of a director. It is therefore advisable to err, if necessary, on the long side for a reflector and on the short side for a director. This also tends to make the antenna performance less dependent on the exact frequency at which it is operated, because an increase above the design frequency has the same effect as increasing the length of both parasitic elements, while a decrease in frequency has the same effect as shortening both elements. By making the director slightly short and the reflector slightly long, there will be a greater spread between the upper and lower frequencies at which the gain starts to show a rapid decrease.

Fig. 21-29– Gain vs. element spacing for an antenna and one parasitic element. The reference point, 0 dB, is the field strength from a half-wave antenna alone. The greatest gain is in the direction A at spacings of less than 0.14 wavelength, and in direction B at greater spacings. The front-to-back ratio is the difference in dB between curves A and B. Variation in radiation resistance of the driven element is also shown. These curves are for a self-resonant parasitic element. At most spacings the gain as a reflector can be increased by slight lengthening of the parasitic element; the gain as a director can be increased by shortening. This also improves the front-to-back ratio.

TABLE 21-II

Freq.	Driven Element A	Driven Element B	Reflector A	Reflector B	1st Director A	1st Director B	2nd Director A	2nd Director B
14050	33' 5 3/8"	33' 8"	35' 2 1/2"	35' 5 1/4"	31' 9 3/8"	31' 11 5/8"	31' 1 1/4"	31' 3 5/8"
14250	32' 11 3/4"	33' 2 1/4"	34' 8 1/2"	34' 11 1/4"	31' 4"	31' 6 3/8"	30' 8"	30' 10 1/2"
21050	22' 4"	22' 5 5/8"	23' 6"	23' 7 3/4"	21' 2 1/2"	21' 4"	20' 9 1/8"	20' 10 7/8"
21300	22' 3/4"	22' 2 3/8"	23' 2 5/8"	23' 4 1/2"	20' 11 1/2"	21' 1"	20' 6 1/4"	20' 7 3/4"
28050	16' 9"	16' 10 1/4"	17' 7 5/8"	17' 8 7/8"	15' 11"	16'	15' 7"	15' 9 1/2"
28600	16' 5 1/4"	16' 6 3/8"	17' 3 1/2"	17' 4 3/4"	15' 7 1/4"	15' 8 1/2"	15' 3 3/8"	15' 4 1/2"

Element lengths for 20, 15 and 10 meters, phone and cw. These lengths are for 0.2 or .15 wavelength element spacing.

When the over-all length has been decided upon, the element lengths can be found by referring to Fig. 21-31. The lengths determined by these charts will vary slightly in actual practice with the element diameter and the method of supporting the elements, and the tuning of a beam should always be checked after installation. However, the lengths obtained by the use of the charts will be close to correct in practically all cases, and they can be used without checking if the beam is difficult of access.

In order to make it even easier for the Yagi builder, Table 21-II can be used to determine the element lengths needed. Both cw and phone lengths are included for the three bands, 20, 15, and 10 meters. The 0.2 wavelength spacing will provide greater bandwidth than the 0.15 spacing. Antenna gain is essentially the same with either spacing. The element lengths given will be the same whether the beam has 2, 3 or 4 elements. It is recommended that "Plumber's Delight" type construction be used where all the elements are mounted directly on and grounded to the boom. This puts the entire array at dc ground potential, affording better lightning protection. A gamma section can be used for matching the feed line to the array.

Tuning Adjustments

The preferable method for checking the beam is by means of a field-strength meter or the S meter of a communications receiver, used in conjunction with a dipole antenna located at least 10 wavelengths away and as high as or higher than the beam that is being checked. A few watts of power fed into the antenna will give a useful signal at the observation point, and the power input to the transmitter (and hence the antenna) should be held constant for all of the readings.

Preliminary matching adjustments can be done on the ground. The beam should be set up so that the reflector element rests on earth with the remaining elements in a vertical configuration. In other words, the beam should be aimed straight up. The matching system is then adjusted for 1:1 SWR between the feed line and driven element. When the antenna is raised into its operating height, only slight touch-up of the matching network will be required.

A great deal has been printed about the need for tuning the elements of a Yagi-type beam. However, experience has shown that lengths given in Fig. 21-29 and Table II are close enough to the desired length that no further tuning should be required. This is true for Yagi arrays made from metal tubing. However, in the case of quad antennas, made from wire, the reflectors and directors *should* be tuned with the antenna in its operating location. The reason is that it is practically impossible to cut and install wire to the *exact* dimensions required for maximum gain or front-to-back.

Simple Systems: The Rotary Beam

Two- and three-element systems are popular for rotary-beam antennas, where the entire antenna system is rotated, to permit its gain and directivity to be utilized for any compass direction. They may be mounted either horizontally (with the plane containing the elements parallel to the earth) or vertically.

A four-element beam will give still more gain than a three-element one, provided the support is sufficient for about 0.2 wavelength spacing between elements. The tuning for maximum gain involves many variables, and complete gain and tuning data are not available.

The elements in close-spaced (less than one-quarter wavelength element spacing) arrays

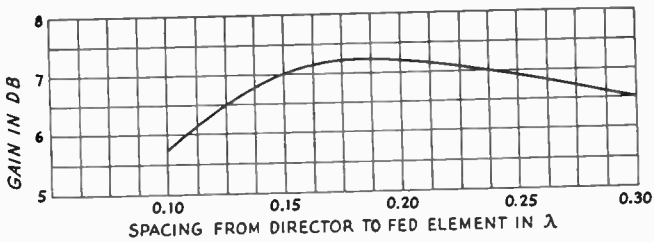

Fig. 21-30 — Gain of 3-element Yagi versus director spacing, the reflector spacing being fixed at 0.2 wavelength.

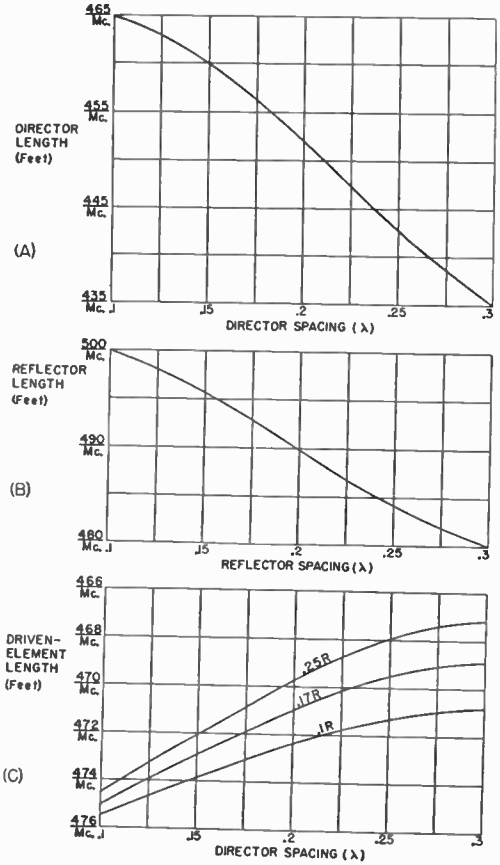

Fig. 21-31 — Element lengths for a 3-element beam. These lengths will hold closely for tubing elements supported at or near the center.

Fig. 21-32 — Illustrations of gamma and T-matching systems. At A, the gamma rod is adjusted along with C until the lowest possible SWR is obtained. A T-match is shown at B. It is the same as two gamma-match rods. The rods and C1 and C2 are alternately adjusted for a 1:1 SWR. A coaxial 4:1 balun transformer is shown at C. A toroidal balun can be used in place of the coax model shown. Details for the toroidal version are given in Chapter 20, and it has a broader frequency range than the coaxial version. The T-match is adjusted for 200 ohms and the balun steps this *balanced* value down to 50 ohms, *unbalanced*. Or, the T-match can be set for 300 ohms, and the balun used to step this down to 75 ohms, unbalanced. Dimensions for the gamma and T-match rods cannot be given by formula. Their lengths and spacing will depend upon the tubing size used, and the spacing of the parasitic elements of the beam. Capacitors C, C1 and C2 can be 140 pF for 14-MHz beams. Somewhat less capacitance will be needed at 21 and 28 MHz.

preferably should be made of tubing of one-half to one-inch diameter. A conductor of large diameter not only has less ohmic resistance but also has lower Q; both these factors are important in close-spaced arrays because the impedance of the driven element usually is quite low compared to that of a simple dipole antenna. With three- and four-element close-spaced arrays the radiation resistance of the driven element may be so low that ohmic losses in the conductor can consume an appreciable fraction of the power.

Feeding the Rotary Beam

Any of the usual methods of feed (described later under "Matching the Antenna to the Line") can be applied to the driven element of a rotary beam. The popular choices for feeding a beam are the gamma match with series capacitor and the T match with series capacitors and a half-wavelength phasing section, as shown in Fig. 21-32. These methods are preferred over any others because they permit adjustment of the matching and the use of coaxial line feed. The variable capacitors can be housed in small plastic cups for weatherproofing; receiving types with close spacing can be used at powers up to a few hundred watts. Maximum capacitance required is usually 140 pF at 14 MHz and proportionately less at the higher frequencies.

If physcially possible, it is better to adjust the matching device after the antenna has been installed at its ultimate height, since a match made with the antenna near the ground may not hold for the same antenna in the air.

Sharpness of Resonance

Peak performance of a multielement parasitic array depends upon proper phasing or tuning of

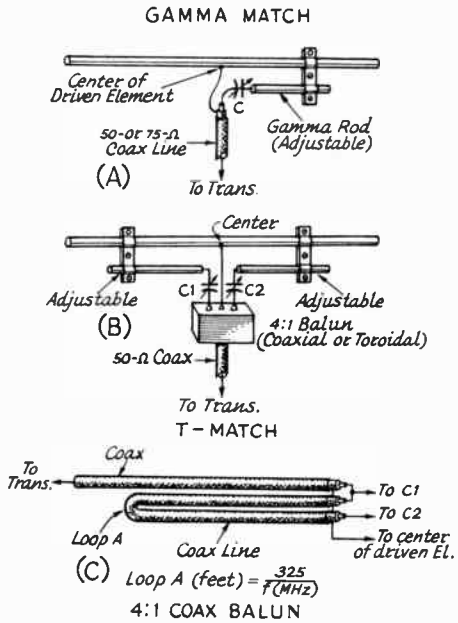

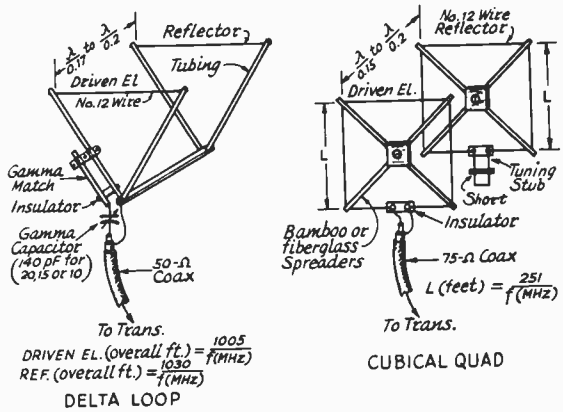

Fig. 21-33 — Information on building a quad or a Delta-Loop antenna. The antennas are electrically similar, but the Delta Loop uses "plumber's delight" construction. Additional information is given in the text.

the elements, which can be exact for one frequency only. In the case of close-spaced arrays, which because of the low radiation resistance usually are quite sharp-tuning, the frequency range over which optimum results can be secured is only of the order of 1 or 2 percent of the resonant frequency, or up to about 500 kHz at 28 MHz. However, the antenna can be made to work satisfactorily over a wider frequency range by adjusting the director or directors to give maximum gain at the *highest* frequency to be covered, and by adjusting the reflector to give optimum gain at the *lowest* frequency. This sacrifices some gain at all frequencies, but maintains more uniform gain over a wider frequency range.

The use of large-diameter conductors will broaden the response curve of an array because the larger diameter lowers the *Q*. This causes the reactances of the elements to change rather slowly with frequency, with the result that the tuning stays near the optimum over a considerably wider frequency range than is the case with wire conductors.

Combination Arrays

It is possible to combine parasitic elements with driven elements to form arrays composed of collinear driven and parasitic elements and combination broad-side-collinear-parasitic elements. Thus two or more collinear elements might be provided with a collinear reflector or director set, one parasitic element to each driven element. Or both directors and reflectors might be used. A broadside-collinear array can be treated in the same fashion.

DELTA LOOPS AND QUAD BEAMS

One of the more effective DX arrays is called the "cubical quad" or, simply, "quad" antenna. It consists of two or more square loops of wire supported by a bamboo or fiberglass cross-arm assembly. The loops are a quarter wavelength per side (full wavelength overall) one loop being driven, and the other serving as a parasitic element – usually a reflector. A variation of the quad is called the Delta Loop. The electrical properties of both antennas are the same, generally speaking, though some operators report better DX results with the Delta Loop. Both antennas are shown in Fig. 21-33. They differ mainly in their physical properties, one being of "Plumber's Delight" construction, while the other uses insulating support members. One or more directors can be added to either antenna if additional gain and directivity is desired, though most operators use the two-element arrangement.

It is possible to interlace quads or "deltas" for two or more bands, but if this is done the formulas given in Fig. 21-33 may have to be changed slightly to compensate for the proximity effect of the second antenna. For quads the length of the full-wave loop can be computed from

$$\textit{Full-wave loop}\ (\text{ft}) = \frac{1005}{f\,(\text{MHz})} \qquad \text{21-H}$$

If multiple arrays are used, each antenna should be tuned up separately for maximum forward gain as noted on a field-strength meter. The reflector stub on the quad should be adjusted for the foregoing condition. The Delta-Loop gamma match should be adjusted for a 1:1 SWR. No reflector tuning is needed. The Delta-Loop antenna has a broader frequency response than the quad, and holds at an SWR of 1.5:1 or better across the band it is cut for.

The resonance of the quad antenna can be found by checking the frequency at which the lowest SWR occurs. The element length (driven element) can be adjusted for resonance in the most-used portion of the band by lengthening or shortening it.

It is believed that a two-element quad or Delta-Loop antenna compares favorably with a three-element Yagi array in terms of gain (see *QST*, May, 1963, and *QST*, January 1969 for additional information). The quad and Delta-Loop antennas perform very well at 50 and 144 MHz. A discussion of radiation patterns and gain, quads vs. Yagis, was presented by Lindsay in *QST*, May, 1968.

MATCHING THE ANTENNA TO THE LINE

The load for a transmission line may be any device capable of dissipating rf power. When lines are used for transmitting applications the most common type of load is an antenna. When a transmission line is connected between an antenna and a receiver, the receiver input circuit (not the antenna) is the load, because the power taken from a passing wave is delivered to the receiver.

Whatever the application, the conditions existing at the load, and *only* the load, determine the standing-wave ratio on the line. If the load is purely resistive and equal in value to the characteristic impedance of the line, there will be no standing waves. In case the load is not purely resistive, and/or is not equal to the line Z_0, there will be standing waves. No adjustments that can be made at the input end of the line can change the SWR, nor is it affected by changing the line length.

Only in a few special cases is the load inherently of the proper value to match a practicable transmission line. In all other cases it is necessary either to operate with a mismatch and accept the SWR that results, or else to take steps to bring about a proper match between the line and load by means of transformers or similar devices. Impedance-matching transformers may take a variety of physical forms, depending on the circumstances.

Note that it is essential, if the SWR is to be made as low as possible, that the load at the point of connection to the transmission line be purely resistive. In general, this requires that the load be tuned to resonance. If the load itself is not resonant at the operating frequency the tuning sometimes can be accomplished in the matching system.

THE ANTENNA AS A LOAD

Every antenna system, no matter what its physical form, will have a definite value of impedance at the point where the line is to be connected. The problem is to transform this antenna input impedance to the proper value to match the line. In this respect there is no one "best" type of line for a particular antenna system, because it is possible to transform impedances in any desired ratio. Consequently, any type of line may be used with any type of antenna. There are frequently reasons other than impedance matching that dictate the use of one type of line in preference to another, such as ease of installation, inherent loss in the line, and so on, but these are not considered in this section.

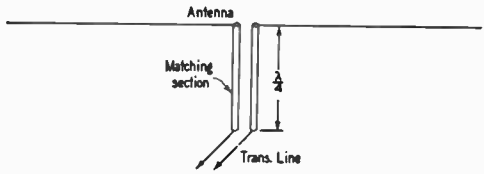

Fig. 21-34 — "Q" matching section, a quarter-wave impedance transformer.

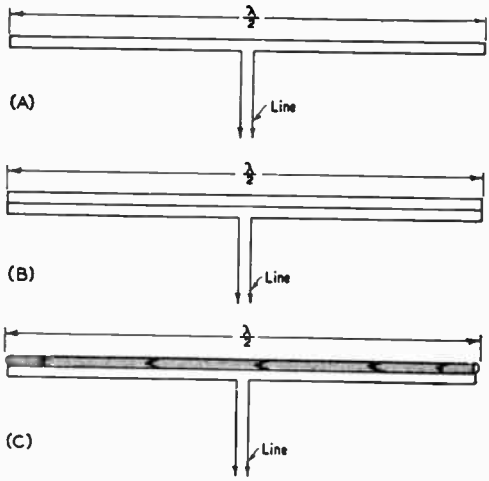

Fig. 21-35 — The folded dipole, a method for using the antenna element itself to provide an impedance transformation.

Although the input impedance of an antenna system is seldom known very accurately, it is often possible to make a reasonably close estimate of its value. The information earlier in this chapter can be used as a guide.

Matching circuits can be built using ordinary coils and capacitors, but are not used very extensively because they must be supported at the antenna and must be weatherproofed. The systems to be described use linear transformers.

The Quarter-Wave Transformer or "Q" Section

As mentioned previously (chapter 20), a quarter-wave transmission line may be used as an impedance transformer. Knowing the antenna impedance and the characteristic impedance of the transmission line to be matched, the required characteristic impedance of a matching section such as is shown in Fig. 21-34 is:

$$Z = \sqrt{Z1Z0} \qquad \text{21-I}$$

Where Z1 is the antenna impedance and Z0 is the characteristic impedance of the line to which it is to be matched.

Example: To match a 600-ohm line to an antenna presenting a 72-ohm load, the quarter-wave matching section would require a characteristic impedance of

$$\sqrt{72 \times 600} = \sqrt{43{,}200} = 208 \text{ ohms}$$

The spacings between conductors of various sizes of tubing and wire for different surge impedances

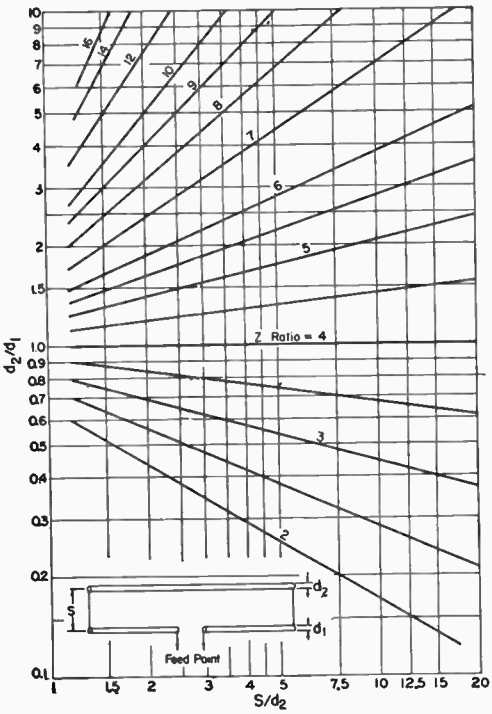

Fig. 21-36 — Impedance transformation ratio, two-conductor folded dipole. The dimensions d1, d2 and s are shown on the inset drawing. Curves show the ratio of the impedance (resistive) seen by the transmission line to the radiation resistance of the resonant antenna system.

are given in graphical form in the chapter on "Transmission Lines." (With 1/2-inch tubing, the spacing in the example above should be 1.5 inches for an impedance of 208 ohms.)

The length of the quarter-wave matching section may be calculated from

$$Length\ (\text{feet}) = \frac{246V}{f} \qquad \text{21-J}$$

where V = Velocity factor
f = Frequency in MHz

Example: A quarter-wave transformer of RG-11/U is to be used at 28.7 MHz. From the table in Chapter 13, $V = 0.66$.

$$Length = \frac{246 \times 0.66}{28.7} = 5.67 \text{ feet}$$

$$= 5 \text{ feet } 8 \text{ inches}$$

The antenna must be resonant at the operating frequency. Setting the antenna length by formula is amply accurate with single-wire antennas, but in other systems, particularly close-spaced arrays, the antenna should be adjusted to resonance before the matching section is connected.

When the antenna input impedance is not known accurately, it is advisable to construct the matching section so that the spacing between conductors can be changed. The spacing then may be adjusted to give the lowest possible SWR on the transmission line.

Folded Dipoles

A half-wave antenna element can be made to match various line impedances if it is split into two or more parallel conductors with the transmission line attached at the center of only one of them. Various forms of such "folded dipoles" are shown in Fig. 21-35. Currents in all conductors are in phase in a folded dipole, and since the conductor spacing is small the folded dipole is equivalent in radiating properties to an ordinary single-conductor dipole. However, the current flowing into the input terminals of the antenna from the line is the current in one conductor only, and the entire power from the line is delivered at this value of current. This is equivalent to saying that the input impedance of the antenna has been raised by splitting it up into two or more conductors.

The ratio by which the input impedance of the antenna is stepped up depends not only on the number of conductors in the folded dipole but also on their relative diameters, since the distribution of current between conductors is a function of their diameters. (When one conductor is larger than the other, as in Fig. 21-35C, the larger one carries the greater current.) The ratio also depends, in general, on the spacing between the conductors, as shown by the graphs of Figs. 21-36 and 21-37. An important special case is the 2-conductor dipole with conductors of equal diameter; as a simple antenna, not a part of a directive array, it has an

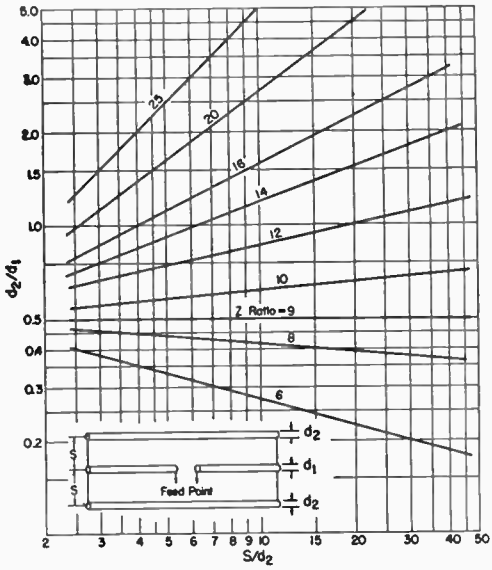

Fig. 21-37 — Impedance transformation ratio, three-conductor folded dipole. The dimensions d1, d2 and s are shown on the inset drawing. Curves show the ratio of the impedance (resistive) seen by the transmission line to the radiation resistance of the resonant antenna system.

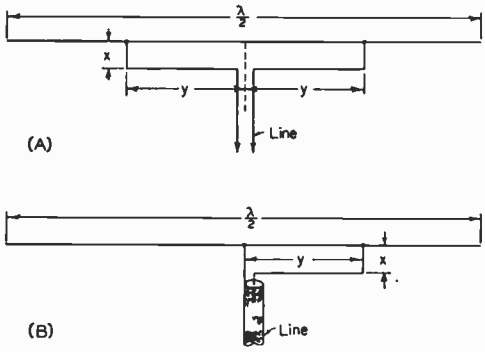

Fig. 21-38 — The "T" match and "gamma" match.

input impedance close enough to 300 ohms to afford a good match to 300-ohm Twin-Lead.

The required ratio of conductor diameters to give a desired impedance ratio using two conductors may be obtained from Fig. 21-36. Similar information for a 3-conductor dipole is given in Fig. 21-37. This graph applies where all three conductors are in the same plane. The two conductors not connected to the transmission line must be equally spaced from the fed conductor, and must have equal diameters. The fed conductor may have a different diameter, however. The unequal-conductor method has been found particularly useful in matching to low-impedance antennas such as directive arrays using close-spaced parasitic elements.

The length of the antenna element should be such as to be approximately self-resonant at the median operating frequency. The length is usually not highly critical, because a folded dipole tends to have the characteristics of a "thick" antenna and thus has a relatively broad frequency-response curve.

"T" and "Gamma" Matching Sections

The method of matching shown in Fig. 21-38A is based on the fact that the impedance between any two points along a resonant antenna is resistive, and has a value which depends on the spacing between the two points. It is therefore possible to choose a pair of points between which the impedance will have the right value to match a transmission line. In practice, the line cannot be connected directly at these points because the distance between them is much greater than the conductor spacing of a practicable transmission line. The "T" arrangement in Fig. 21-38A overcomes this difficulty by using a second conductor paralleling the antenna to form a matching section to which the line may be connected.

The "T" is particularly suited to use with a parallel-conductor line, in which case the two points along the antenna should be equidistant from the center so that electrical balance is maintained.

The operation of this system is somewhat complex. Each "T" conductor (y in the drawing) forms with the antenna conductor opposite it a short section of transmission line. Each of these transmission-line sections can be considered to be terminated in the impedance that exists at the point of connection to the antenna. Thus the part of the antenna between the two points carries a transmission-line current in addition to the normal antenna current. The two transmission-line matching sections are in series, as seen by the main transmission line.

If the antenna by itself is resonant at the operating frequency its impedance will be purely resistive, and in such case the matching-section lines are terminated in a resistive load. However, since these sections are shorter than a quarter wavelength their input impedance – i.e., the impedance seen by the main transmission line looking into the matching-section terminals – will be reactive as well as resistive. This prevents a perfect match to the main transmission line, since its load must be a pure resistance for perfect matching. The reactive component of the input impedance must be tuned out before a proper match can be secured.

One way to do this is to detune the antenna just enough, by changing its length, to cause reactance of the opposite kind to be reflected to the input terminals of the matching section, thus cancelling the reactance introduced by the latter. Another method, which is considerably easier to adjust, is to insert a variable capacitor in series with the matching section where it connects to the transmission line, as shown in Fig. 21-32. The capacitor must be protected from the weather.

The method of adjustment commonly used is to cut the antenna for approximate resonance and then make the spacing x some value that is convenient constructionally. The distance y is then adjusted, while maintaining symmetry with respect to the center, until the SWR on the transmission line is as low as possible. If the SWR is not below 2 to 1 after this adjusment, the antenna length should be changed slightly and the matching section taps adjusted again. This procedure may be continued until the SWR is as close to 1 to 1 as possible.

When the series-capacitor method of reactance compensation is used (Fig. 21-32), the antenna should be the proper length to be resonant at the operating frequency. Trial positions of the matching-section taps are then taken, each time adjusting the capacitor for minimum SWR, until the standing waves on the transmission line are brought down to the lowest possible value.

The unbalanced ("gamma") arrangement in Fig. 21-38B is similar in principle to the "T," but is adapted for use with single coax line. The method of adjustment is the same.

BALANCING DEVICES

An antenna with open ends, of which the half-wave type is an example, is inherently a balanced radiator. When opened at the center and fed with a parallel-conductor line this balance is

maintained throughout the system, so long as the causes of unbalance discussed in the transmission-line chapter are avoided.

If the antenna is fed at the center through a coaxial line, as indicated in Fig. 21-39A, this balance is upset because one side of the radiator is connected to the shield while the other is connected to the inner conductor. On the side connected to the shield, a current can flow down over the *outside* of the coaxial line, and the fields thus set up cannot be canceled by the fields from the inner conductor because the fields *inside* the line cannot escape through the shielding afforded by the outer conductor. Hence these "antenna" currents flowing on the outside of the line will be responsible for radiation.

Linear Baluns

Line radiation can be prevented by a number of devices whose purpose is to detune or decouple the line for "antenna" currents and thus greatly reduce their amplitude. Such devices generally are known as baluns (a contraction for "balanced to unbalanced"). Fig. 21-39B shows one such arrangement, known as a bazooka, which uses a sleeve over the transmission line to form, with the outside of the outer line conductor, a shorted quarter-wave line section. As described earlier in this chapter, the impedance looking into the open end of such a section is very high, so that the end of the outer conductor of the coaxial line is effectively insulated from the part of the line below the sleeve. The length is an *electrical* quarter wave, and may be physically shorter if the insulation between the sleeve and the line is other than air. The bazooka has no effect on the impedance relationships between the antenna and the coaxial line.

Another method that gives an equivalent effect is shown at C. Since the voltages at the antenna terminals are equal and opposite (with reference to ground), equal and opposite currents flow on the surfaces of the line and second conductor. Beyond the shorting point, in the direction of the transmitter, these currents combine to cancel out. The balancing section "looks like" an open circuit to the antenna, since it is a quarter-wave parallel-conductor line shorted at the far end, and thus has no effect on the normal antenna operation. However, this is not essential to the line-balancing function of the device, and baluns of this type are sometimes made shorter than a quarter wavelength in order to provide the shunt inductive reactance required in certain types of matching systems.

Fig. 21-39D shows a third balun, in which equal and opposite voltages, balanced to ground, are taken from the inner conductors of the main transmission line and half-wave phasing section. Since the voltages at the balanced end are in series while the voltages at the unbalanced end are in parallel, there is a 4-to-1 step-down in impedance from the balanced to the unbalanced side. This arrangement is useful for coupling between a balanced 300-ohm line and a 75-ohm coaxial line, for example.

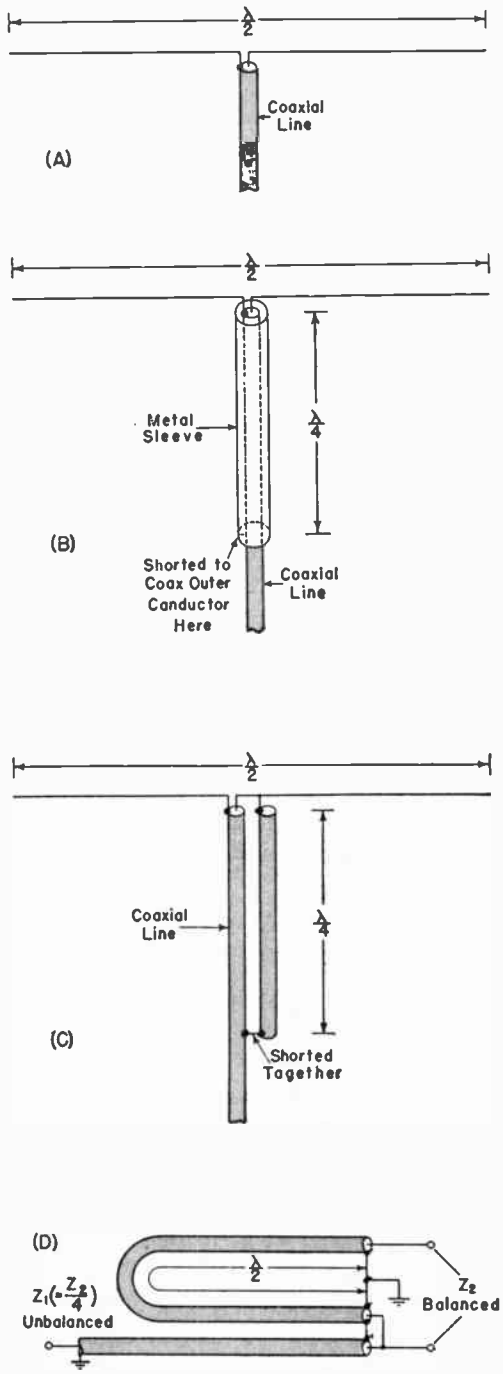

Fig. 21-39 — Radiator with coaxial feed (A) and methods of preventing unbalanced currents from flowing on the outside of the transmission line (B and C). The half-wave phasing section shown at D is used for coupling between an unbalanced and a balanced circuit when a 4-to-1 impedance ratio is desired or can be accepted.

LIMITED-SPACE ANTENNAS

It was said earlier in the chapter that any length of wire could be used as an antenna provided it was tuned to resonance and matched to the transmission line which feeds the amateur station. This being fact, it is possible to employ any number of physically shortened antennas for use in attics or on small city lots. Some apartment dwellers have been know to use temporary antennas made from random lengths of small-diameter enamel wire (such as No. 26 guage) and insulated at each end by a large rubber band. Such antennas can be strung out to a tree or lamp post for use during the evening, then brought into the house during the day. Though the so-called "invisible antenna" represents one approach to the problems faced by some city-dweller amateurs, there are situations that enable the operator to erect permanent antennas of short dimensions.

Most indoor antennas represent a compromise, at best, where efficiency is a consideration. But, many indoor antennas are capable of performing well enough to provide plenty of local and DX contacts. The actual configuration used has as much latititude as the designer's imagination can provide. The main considerations for effective use of indoor antennas are to keep the antennas as far from the house wiring and water pipes as possible. If steel girders are used in the building's framework try to locate the antenna as far from these supports as possible – possibly in between them.

Some operators have had excellent results by taping strips of aluminum foil to the glass of an apartment window, and trimming it to a resonant length for vhf operation. Others have insulated large window screens or storm-window frames from their supports and used them as resonant antennas. It is possible to use the gutter pipes and down spouts of wood frame houses as antennas if they are insulated from ground, though at high-power levels *this could present a fire and safety hazard.* For this reason the method is not recommended. Good results can sometimes be had by using a short helically wound vertical of the type described later in this section. It can be leaned against a wall in the apartment, and worked against a water-pipe ground. Window-sill semivertical antennas are also worth consideration by the apartment dweller. Whatever system is used in limited-space work, safety should be the foremost consideration at all times. Never erect an antenna that will enable people to come in contact with it when it is connected to the amateur station. Make certain that it is erected in such a manner as to prevent people from falling over it when they are walking through the house or the yard. Keep the antenna away from phone or power lines for safety's sake.

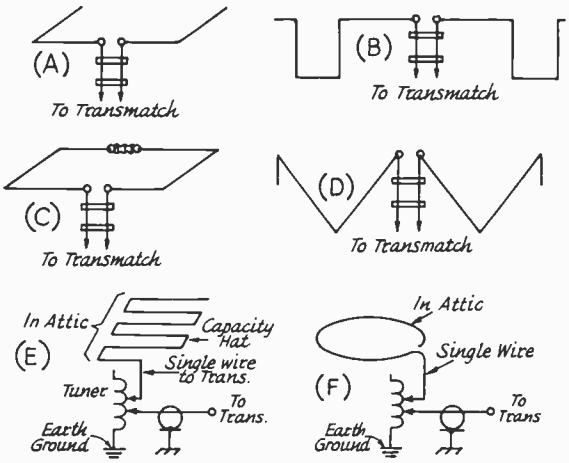

Fig. 21-40 – Various configurations for small indoor antennas. A discussion of installation and tuning methods is covered in the text.

Indoor Dipoles

Fig. 21-40 shows only a few possibilities for shortened indoor antennas. It should be remembered, however, that when the ends of an antenna are bent as shown there will be a decrease in efficiency because the signal tends to suffer from phase cancellation. Also, the formulas for dipole antennas do not hold true when the antenna is bent in the manner illustrated. For this reason it will be necessary to use the "cut-and-try" method in achieving resonance. Alternatively, tuned feeders can be used. This not only makes tuning of the antenna less dependent upon dipole length, but also makes possible the use of the antenna on more than one band. It is possible to use 300-ohm twin line for the feeders if desired, but this is recommended only for power levels less than 200 watts. Bent dipoles are shown in Fig. 21-40 at A, B, C and D. They can be held in place by means of staples, masking tape, or thumb tacks. Ideally, they should be mounted in the attic, or out of doors above the roof. They can be used in the operating room if no other choice is open, but will give best performance when mounted as high and in the clear as possible. The antennas at E and F are single-wire-fed systems that will act as quarter-wavelength verticals. The top fold of wire should be in the attic and will function as a capacitance hat. The vertical drop wire will be the actual radiating antenna and should be as long as possible. The top tap on the tuner is adjusted for antenna resonance. The bottom tap is adjusted for lowest SWR. An SWR bridge should be used for tuning up any of the antennas shown. The antenna at C is similar to a vhf Halo in performance, and will be omnidirectional in its radiation pattern.

Loaded Dipoles

It is possible to obtain good results with loaded dipoles of the kind shown in Fig. 21-41. Use whatever space is available for the indoor (or outdoor) installation, attempting to keep the two

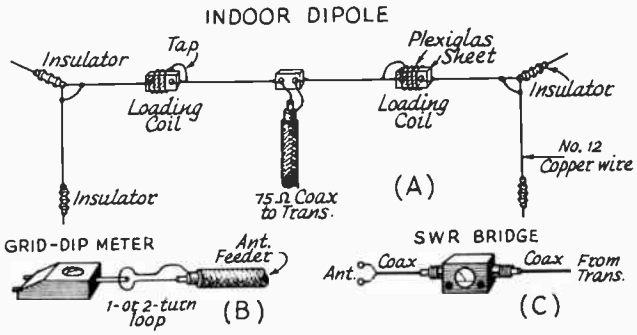

Fig. 21-41 — Details of an indoor loaded dipole. At B and C, recommended methods for tuning the antenna to resonance.

halves of the antenna as straight as possible. If the need arises the ends can be bent up or down as shown. Loading inductors are inserted in the two sides of the dipole to bring the system to resonance. The shorter the antenna the more inductance will be needed. The loading coils should be located as far from the feed point as practical, but not at the far ends of the wires. Always allow at least three feet of wire to extend beyond the outer ends of the coils, thus allowing the end sections to act as "capacitance hats" for the coils. Miniductor Coil Stock is suitable for use as loading coils. The antenna can be tuned to resonance at the desired operating frequency by placing a small link across the transmitter end of the coax line and using a grid-dip meter to locate the point of resonance. The grid dipper is coupled to the link. Adjust the loading coils a half turn at a time until resonance is noted. Listen to the grid dipper's signal on the station receiver to be certain that the antenna is being tuned to the proper frequency. This antenna can be fed with 75-ohm coax line, but will be quite "frequency conscious" because of the loading inductors. At a given coil setting it may be possible to maintain a low SWR over only a narrow segment of a given band. Taps can be soldered to the coils for moving from one part of the band to another.

HELICALLY-WOUND SHORT VERTICAL ANTENNAS

An effective physically-short radiator can be built by helically-winding a length of wire on a long insulating rod or pole as shown in the sketch. Supporting poles such as bamboo rods, fiber glass tubing, or treated dowel rod, serve as practical foundation material for such an antenna. This type of antenna is most often used as a vertical radiator and is worked against ground as a quarter-wavelength system. The voltage and current distribution is more linear than when a lumped-inductance (loading coil and whip) is employed, a possible reason for its effective performance.

This type of antenna is particularly useful for limited-space applications in the lower part of the hf spectrum – 1.8, 3.5 and 7.0 MHz. It can be used for 14 MHz and higher, but is desirable only if an antenna shorter than a natural quarter wavelength is required.

Construction

The length of the supporting pole can be anything between 4 feet and 20 feet in length. The longer the rod, the better the performance. Fiber glass spreader poles for cubical-quad antennas are ideal for this application. Alternatively, bamboo fishing poles, covered with fiber glass, work well. Some lumber yards carry 16-foot long hand-rail stock (wooden) which can be coated with fiber glass or several coats of exterior spar varnish and used as a coil form. The main consideration is that the antenna pole be of good dielectric properties and that it be weatherproofed.

So that the antenna will be approximately 1/4-wavelength long *electrically*, a 1/2-wavelength piece of insulated wire is needed for the radiating element. When helically-wound as shown, the antenna becomes approximately one-quarter wavelength long, electrically. No. 14 or No. 12 Formvar-insulated copper wire is recommended for the antenna winding. It should be space-wound in as linear a manner as possible. The far end of the vertical should have a 6-inch diameter metal disk, or 12-inch spike, to add sufficient capacitance to lower the impedance at the far end of the radiator

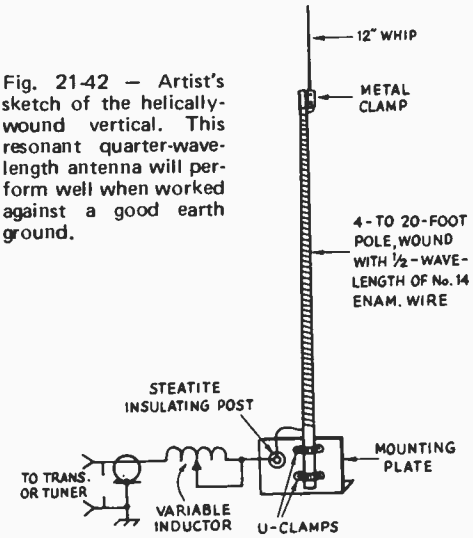

Fig. 21-42 — Artist's sketch of the helically-wound vertical. This resonant quarter-wavelength antenna will perform well when worked against a good earth ground.

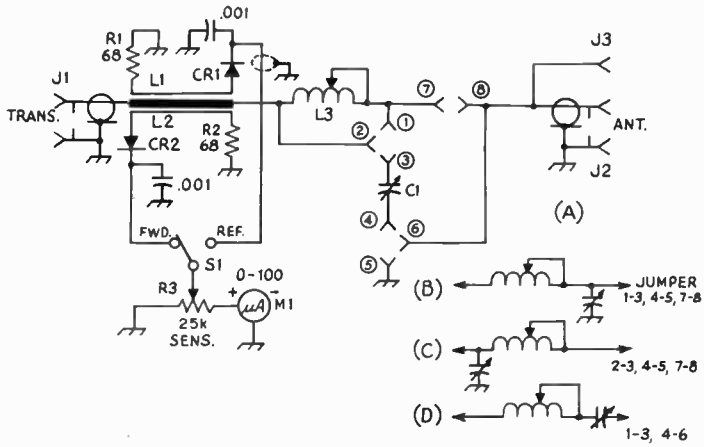

Fig. 21-43 — Circuit diagram of the L-network Transmatch. The eight banana jacks are E. F. Johnson type 108-900, and three dual banana plugs are required, E. F. Johnson type 108-200.
C1 — Variable capacitor, 350 pF (E. F. Johnson 154-10).
CR1, CR2 — 1N34A germanium diode.
J1, J2 — Chassis connector, type SO-239.
J3 — Feedthrough terminal, isolantite.
L1, L2 — See Fig. 21-44, part of etched-circuit assembly.
L3 — Variable inductor 28 μH (E. F. Johnson 229-203).
M1 — 100-μA meter.
R1, R2 — 68-ohm, 1/2-watt carbon or composition, *not wirewound.*
R3 — 25,000-ohm carbon control, linear taper.
S1 — Spst toggle.

sufficiently to prevent corona effects which can burn the far end of the element during medium- and high-power operation. An aluminum base-mounting plate and two U clamps can serve as a support for the antenna.

Operation

To build the antenna for use on 160 meters, for example, wind approximately 248 feet of wire on the pole as shown. Since this will fall just short of natural resonance at one-quarter wavelength, some type of variable inductor will be needed at the base of the antenna. A rotary inductor from an old Command Set transmitter will do the job. It should be enclosed in a weatherproof box of plastic or metal. The inductor is adjusted by means of an SWR indicator for the best match obtainable at the operating frequency. An earth ground is required for proper operation, and a buried radial system is recommended. Alternatively, several ground rods can be driven into the earth near the base of the antenna and bonded together with heavy wire.

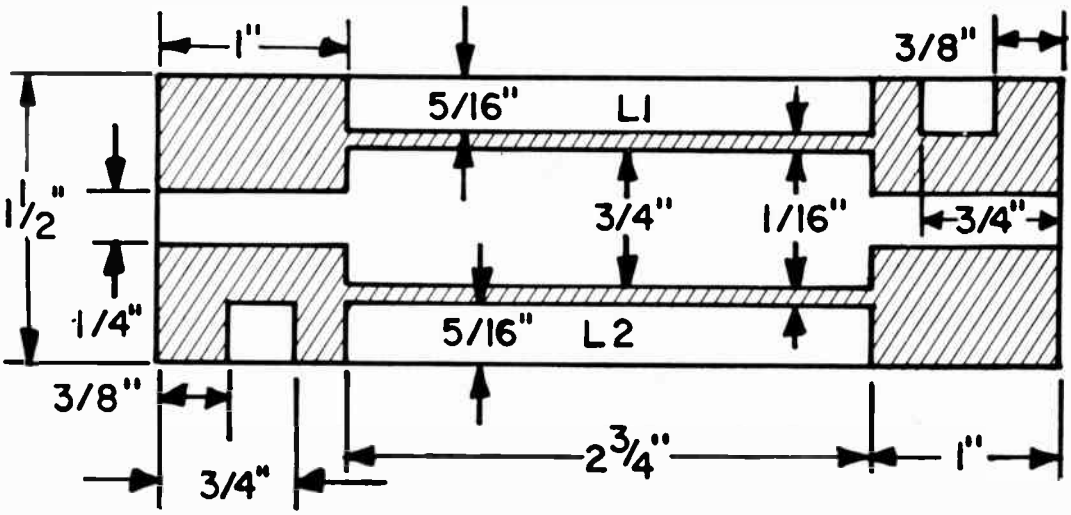

Fig. 21-44 — Etched circuit-board template. The foil side is shown, the etched portion is shaded.

Indoor Antennas

It may not be possible to secure a 1:1 SWR without using some form of impedance-matching system. After the antenna is made resonant at the operating frequency, a tuning network such as that of Fig. 21-43 can be employed to provide the desired 1:1 SWR. Since antennas of this type are relatively "frequency conscious," it will be necessary to retune the matching network when moving from one part of the band to another. The completed antenna should be given a coating of fiber glass or spar varnish to seal it against the weather, and to secure the coil turns. It has been observed that this antenna has exceptional immunity to man-made electrical noises. It also cuts down the response to broadcast-band signals which sometimes tend to overload the station receiver. The foregoing attributes result from the fact that it is a narrow-band antenna.

INDOOR ANTENNAS

Amateurs residing in apartment buildings may not be able to put up outdoor antennas or to use limited-space antennas such as shown in Fig. 21-40. The answer to the problem is to use a window-mounted mobile antenna, or random-length wire fed at one end.

Some General Considerations

There are exceptions to the following rules but, in general, they can be depended upon.

1) An outdoor antenna will work better than an indoor one.

2) An antenna inside a frame building with wood exteriors is better than the same antenna in a steel-and-concrete building.

3) The higher above ground, inside or out, the better the antenna will work.

4) The bigger (or longer) you can make an indoor antenna, the better – even if it means running wire around corners.

5) Even a poor antenna *should* produce some contacts.

The Coupling Problem

Most transmitters are designed to work into a 50-ohm load, and contain little or no provision for adjusting the transmitter when the load is other than 50 ohms. Unfortunately, there is no random-length wire antenna that will present a 50-ohm load on all bands. What is required is a Transmatch. A Transmatch is simply an adjustable *LC* network that converts the unknown antenna impedance to 50 ohms. The unit, shown in Fig. 21-45, will cover the 80- through 10-meter bands and can handle 1 kW of rf power.

Circuit Details

The unit shown in Fig. 21-43 is designed to be used in three configurations. They are shown at B, C, and D. With one of the three hookups, it should be possible to match practically any antenna to the transmitter.

In order to get complete band coverage and avoid the complexities of band-switching, banana and jack plugs are used to change the circuit to the configuration needed. For example, if the setup shown at B is desired, jumper terminals 7 and 8, 1 and 3, and 4 and 5 should be used. Using the banana plugs makes for easy changing of the circuit.

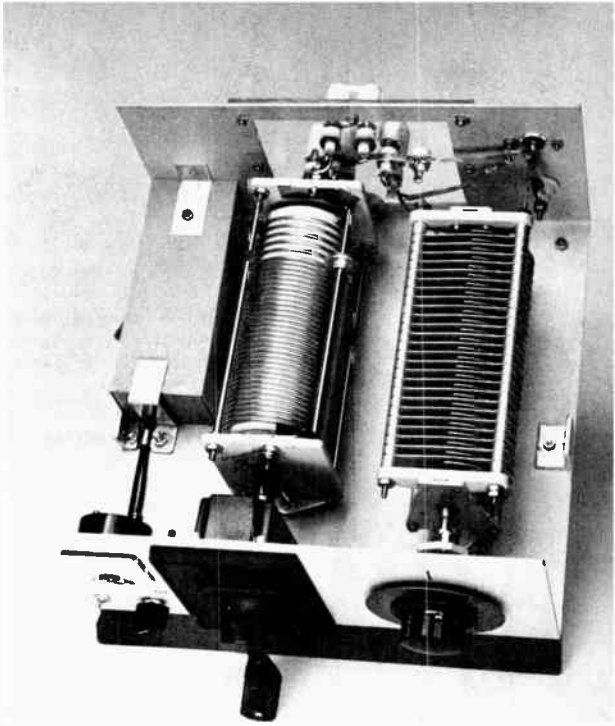

Fig. 21-45 — The Monimatch is at the upper left, covered by a metal enclosure. Connections from the roller inductor and the variable capacitor to the terminals on the jacks are made with thin strips of copper, although No. 12 or 14 wire can be used instead. The two antenna terminals are at the rear right. The top terminal is for use with a coax-fed antenna, if desired.

Whenever a Transmatch is used, the operator should have a way of knowing when the unit is adjusted correctly. The answer to this need is a Monimatch or other SWR indicator.

Construction Details

The chassis for mounting the Transmatch is made from a piece of aluminum measuring 10 X 19 inches. The ends of the 19-inch length of aluminum are bent up to form a U-shaped chassis, the ends being 4 1/2 inches high to form a chassis 10 X 10 X 4 1/2 inches. The back side of the U has an opening cut out, 3 1/4 inches high by 4 1/2 inches long. A piece of Plexiglas is mounted over this opening. The jack-plug sockets are installed directly on the plastic. Connections from the roller inductor, L3, and variable capacitor, C1, are made to the banana jacks. Be careful when drilling the holes for the jacks to insure that they will mate with the plugs. Fig. 21-44 shows the details for a pc-board Monimatch. Methods for making etched circuit boards are given in detail in the Construction Practices chapter.

How to Tune Up

Using the Transmatch is not complicated. Although it takes some time to find the correct combination of settings, once determined, they can be logged for later reference. Use a short length of 50-ohm coax to connect the Transmatch to the transmitter. Attach the antenna to the Transmatch. Tune up the transmitter on the desired band, making sure that the final amplifier is resonated, but with the power output reduced. With the Monimatch in the forward-reading position, set the sensitivity control for a full-scale reading. Be sure to keep the final amplifier tank in resonance. Switch the meter to the reflected position, and then adjust L1 and C1, until the lowest indication of reflected power is obtained. It should be possible to get the meter to read zero, With a zero reading in the reflected position, versus full scale in the forward setting, the Transmatch is correctly adjusted, and the SWR is 1. The circuit may have to be changed to one of the other configurations in order to get a match, but one combination *should* work. Once the Transmatch is set properly, then adjust the transmitter to its rated power input. One other point: It isn't always possible to get a good ground connection in an apartment. Therefore, a connection to a cold-water pipe or earth ground should be used.

Try to make the antenna as long as possible, even if it must be run around corners. The length that will work best is from 120 to 130 feet. The end of the wire can be terminated at a window screen, which will get *part* of the antenna outside.

ROTARY BEAMS

A TWO-ELEMENT 15-METER BEAM

Shown in Fig. 21-46 is a 2-element 15-meter beam, with element lengths cut for the Novice portion of the band. This antenna can be made from readily available material, primarily Reynolds "Do-It-Yourself" aluminum tubing, available in practically any hardware store and in most Sears retail stores. The Reynolds stock may be slightly more expensive than surplus aluminum but the ease of procurement makes up for the price difference.

The Reynolds tubing that is used to make up the elements in the beam comes in eight-foot lengths. The readily available sizes are 1-inch and 3/4-inch diameters. A single element consists of one of the larger-diameter lengths and two of the 3/4-inch diameter sections. When the smaller diameters are telescoped into the larger piece, the fit is very loose. Reynolds manufactures a 7/8-inch diameter stock for the primary purpose of telescoping their other two sizes together. The reason for stressing this point is because the average dealer doesn't know this stock exists, mainly because his catalog doesn't show it.

Shown in Table III is a bill of materials to make your shopping easier but to reemphasize that 7/8-inch diameter stock comes in 6-foot lengths and the Reynolds stock number is 4231. The boom is 1 1/4-inch diameter, 8 feet long and Reynolds has such an item available or use a TV mast section available from any TV store.

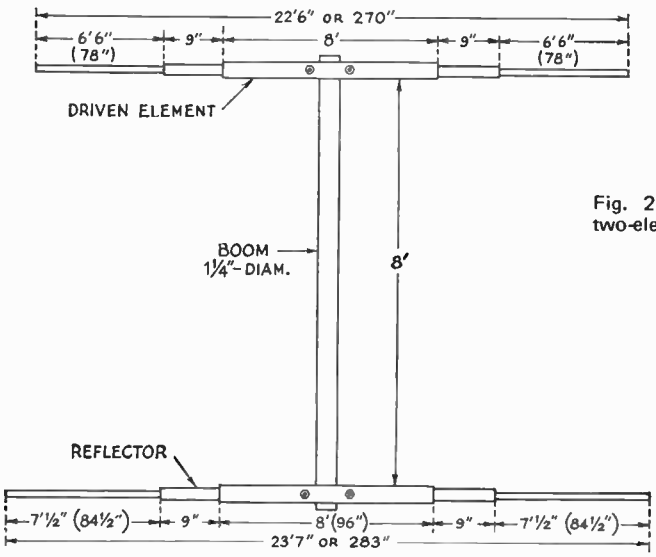

Fig. 21-46 — Dimensions for the two-element 15-meter beam.

TABLE 21-III

Quantity	*Length (ft.)*	*Diameter (in.)*	*Reynolds No.*
2	8	1	9A
4	8	3/4	8A
1	8	1 1/4	10A
1	6	7/8	4231

2 U-bolts, TV antenna to mast type. 1 variable capacitor, 150 pF maximum, any type, 1 plastic freezer container, approximately 5 X 5 X 5 inches, to house gamma capacitor.
Gamma rod, 3/8- to 1/2-inch diameter aluminum tubing, 36 inches long. (Aluminum curtain rod or similar.)

Constructional Information

Fig. 21-46 provides all the dimensions of the completed beam. The Reynolds 7/8-inch diameter stock is 6 feet long and this should be cut into four equal lengths, 18 inches long. This will provide the required sleeves for joining the other two sizes of stock together. In order to mount the 1-inch tubing to the 1 1/4-inch boom the smaller stock must be drilled to take the U bolts as shown in Fig. 21-47 at B. Take extra precautions when measuring the 1-inch stock for drilling the U-bolt holes. The stock that we used was exactly 8 feet long but don't take that for granted; measure each piece yourself and be sure the U-bolt holes are drilled exactly each side of center so that the element will be balanced when mounted to the boom.

After you cut the 7/8-inch diameter stock into four lengths, carefully deburr and smooth off both the inside and outside of the cut ends with a file or knife blade. The fit between the two size tubings is quite precise and if the sleeves aren't smoothed, you are liable to "lock" up the pieces when sliding them together.

Carefully mark off the tubing with pencil marks at the dimensions shown in Fig. 21-46, and drill holes to take No. 6 metal tapping screws. The holes should be drilled about one inch in from where the tubing meshes. When the metal tapping screws are screwed in, all "looseness" in the elements disappear.

A freezer container of the non-grid plastic variety is used to house and protect the gamma capacitor, C1, Fig. 21-47. Either No. 12 or No. 14 solid copper wire can be used to connect from the stator and rotor to nuts and bolts mounted on the side of the plastic box. Incidentally, a good source for short lengths of No. 12 or 14 solid wire is ordinary house-wiring cable. The plastic container is mounted to the boom via the U-bolt that holds the driven element.

Either 50- or 70-ohm coax can be used to feed the beam. It is suggested that the larger diameter cable be used, RG-8 polyfoam type, as it has less loss than the smaller type, RG-58/U. To prepare the coax for feeding the beam, first remove about 6 or 7 inches of the insulation that covers the outer braid. Separate the braid from around the inner conductor and then tape the cable where the two conductors separate in order to weatherproof the cable.

The outer braid should be fastened to the boom at the center of the driven element by clamping the braid under one of the U-bolt nuts that holds the plastic box. The inner conductor of the coaxial line should be connected to one of the nuts and bolts that connect to one side of C1. The other nut and bolt connecting to C1 is used to support one end of the gamma rod, the other end of the gamma rod is supported by the adjustment strap, see Fig. 21-47.

The entire beam weighs less than 10 pounds, so a TV rotator will easily handle the antenna. Also, TV hardware and masting can be used to support the beam.

Adjusting the Gamma

In order to adjust the gamma match an SWR indicator is required. Details for constructing SWR indicators are given in the Measurements chapter. Install the indicator in the line near the antenna and set the gamma shorting strap to the dimensions shown in Fig. 21-47. Rotate C1 through its range

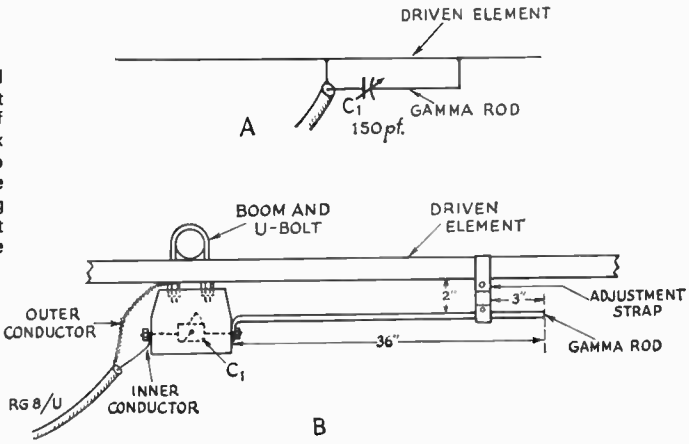

Fig. 21-47 — At A, method of using gamma feed and at B, constructional details of gamma section. The coax feed line should be taped to the boom and then down the supporting mast, allowing enough free line at the mast to permit rotation of the beam.

Fig. 21-48 — Ready for erection, this is the completed dual-band beam.

observing the SWR indicator in the reflected position. The object is to find a setting of the shorting strap and C1 that will give an SWR of 1.

AN OPTIMUM-GAIN TWO-BAND ARRAY

If optimum performance is desired from a Yagi, the dual-4-element array shown in Fig. 21-48 will be of interest. This antenna consists of four elements on 15 meters interlaced with the same number for 10. Wide spacing is used, providing excellent gain and good bandwidth on both bands. Each driven element is fed separately with 50-ohm coax; gamma-matching systems are employed. If desired, a single feed line can be run to the array and then switched by a remotely controlled relay.

The element lengths shown in Fig. 21-51 are for the phone portions of the band, centered at 21,300 and 28,600 kHz. If desired, the element lengths can be changed for cw operation, using the dimensions given in Table 21-11. The spacing of the elements will remain the same for both phone and cw.

Construction Details

The elements are supported by commercially made U-bolt assemblies. Or, muffler clamps make excellent element supports. The boom-to-mast support is also a manufactured item that is designed to hold a 2-inch diameter boom and that can be used with mast sizes up to 2 1/2 inches in diameter. Another feature of this device is that it permits the beam to be tilted after it is mounted in place on the tower, providing access to the elements if they need to be adjusted once the beam has been mounted on the tower.

The elements are made from 6061-T6 aluminum tubing, which is available from metal suppliers. The tubing comes in 12-foot lengths and can be purchased in telescoping sizes. The center sections of the 15-meter beam elements are 1-inch outside diameter and the 10-meter sections are 3/4-inch. The ends of the tubing are slit with a hack saw, and hose clamps are used to hold the telescoping portions.

Fig. 21-52 shows the dimensions needed for a match to 50-ohm line for the commercially made gamma-match sections. These dimensions may vary for other installations. If desired, a homemade matching section can be constructed as outlined in the antenna matching section of this chapter.

A TRIBAND QUAD

Of the different types of triband antennas, the quad is a good performer. There are no trap losses with a quad and probably more important, the element spacing of quad loops is not as critical as a Yagi. Also, a two-element quad has approximately the same gain as a three-element Yagi.

It is recommended that separate feed lines be used to a triband quad array. A remotely controlled relay can be installed at the beam and a single line run to the relay, if desired.

There has been much argument that the square configuration is better than the diamond, but no evidence has been presented to show that this is true. In fact, if the antenna is subject to icing conditions, the diamond would be preferred because the water and ice tends to run off, rather than "hanging" on to the quad wires.

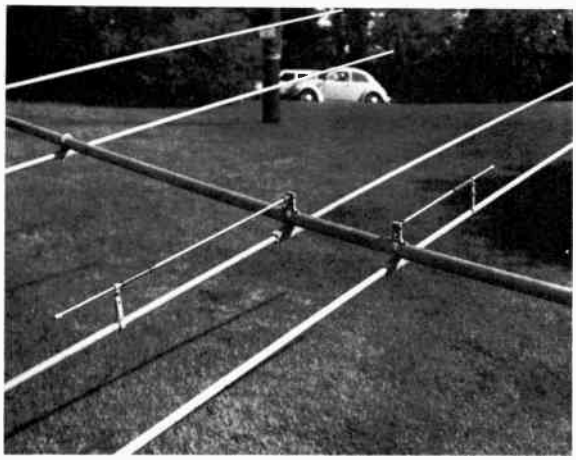

Fig. 2149 — The 15- and 10-meter gamma-matching sections are shown here. These matching units, and the boom-to-element U-bolt assemblies, are made by Kirk Electronics, 134 Westpark Road, Dayton, OH 45459.

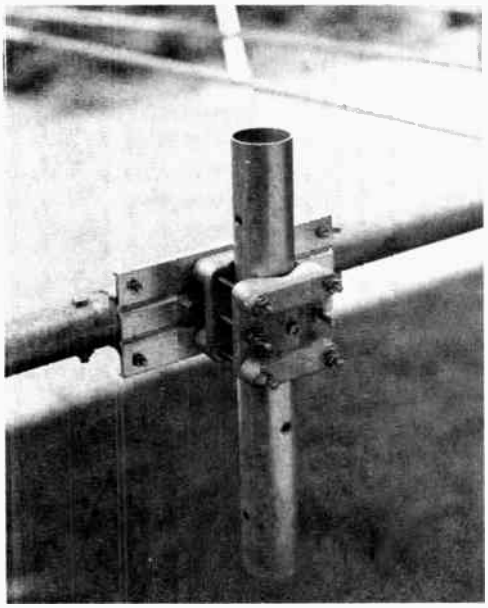

Fig. 21-50 — This is the boom-to-mast fixture that holds the two 12-foot boom sections together. The unit is made by Hy-Gain Electronics, P. O. Box 5407-HE, Lincoln, NE 68505.

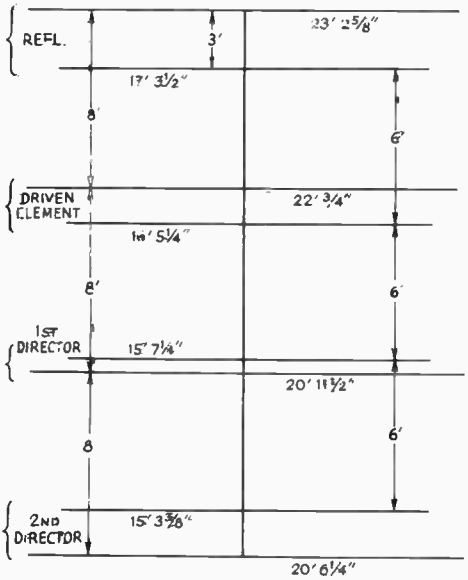

Fig. 21-49 — The element lengths shown are for the phone sections of the bands. Table 21-II provides the dimensions for cw frequencies.

Materials

Since the early use of quads, bamboo poles have been popular as supports for the antenna wires. Lately, fiberglas rods, and even aluminum supports, have become popular. One concern[1] manufactures a complete line of quad hardware plus fiberglas poles. Bamboo fishing poles are still obtainable in some areas of the country, and another source is rug dealers and importers.

Quad Details

For a two-element, triband quad, the best compromise in spacing appears to be 8 feet between elements. If proportional spacing is used, 6, 8, and 10 feet for 10, 15, and 20 meters, respectively, will provide excellent gain and bandwidth.

Shown in Fig. 21-53 are the formula and typical lengths for the driven elements of a triband array. With 8-foot spacing, the impedances of the

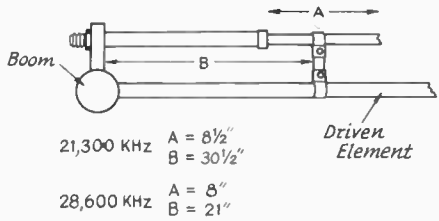

Fig. 21-52 — Dimensions used with the commercial gammas for a match to 50-ohm cable.

driven elements will be 75 ohms on 14 MHz, 100 ohms on 21 MHz, and 125 ohms on 28 MHz, approximately. If SWR is no concern, the elements can be fed directly with 50-ohm cable. However, a matching section is recommended for 15 and 10 meters. The simplest method is to use a quarter-wave matching section made from RG-11/U. One end of the RG-11/U is attached to the driven element, as shown in Fig. 21-54, and the other end is spliced to the 50-ohm feed line (any length) to the station. Be sure to make a water-proof splice because moisture can get into the jacket of coax and ruin the line.

Alternatively, a gamma matching section can be employed. The basic design is shown in Fig. 21-54 at B. The gamma rod, G, can be made from 1/4-inch diameter tubing or rod. With the dimensions given, one should be very close to a match, and only slight adjustment of the gamma shorting bar and capacitor C should be required to obtain an SWR of 1. Receiving variables can be

[1]Kirk Electronics, 134 Westpark Rd., Dayton, OH 45459.

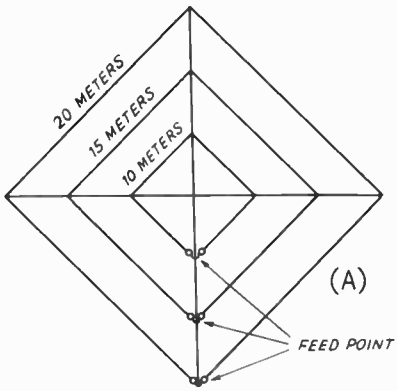

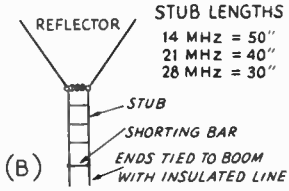

DRIVEN ELEMENTS = $\frac{1005}{f\ \text{MHz}}$

	OVERALL LENGTH	SIDE LENGTH
14.25 MHz =	70'6"	17'7½"
21.30 MHz =	47'2"	11'9½"
28.60 MHz =	35'2"	8'9½"

Fig. 21-53 — Driven-element lengths for a triband quad.

used for C, mounted in a water-proof enclosure (such as a small freezer box) directly at the bottom of the driven element.

The reflectors can be made 5 percent longer than the dimensions given for the driven elements. However, for optimum performance, they should be tuned, using a stub and a shorting bar, as shown in Fig. 21-53B. The stubs can be made from TV-type Twin-lead. The reflector elements should be made the same length as the driven elements if stubs are used.

The reflectors can be tuned by setting up a signal source, preferably at least several hundred feet from the antenna. A grid-dip meter feeding a dipole makes a good reference signal. With the back of the array aimed at the signal source, and a receiver with an S meter attached to the quad feeder, adjust the shorting bar on the reflector for maximum rejection of the signal (minimum S-meter reading). If directors are used, they should be made 5 percent shorter than the driven elements.

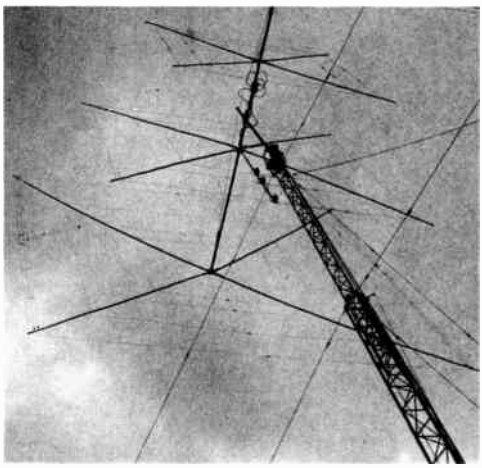

Fig. 21-55 — Here is a 4-band quad, designed by G3FPQ.

Fig. 21-56 — Method of folding to obtain linear loading on the G3FPQ 40-meter elements.

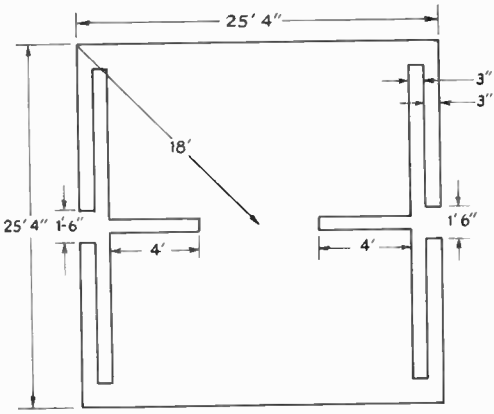

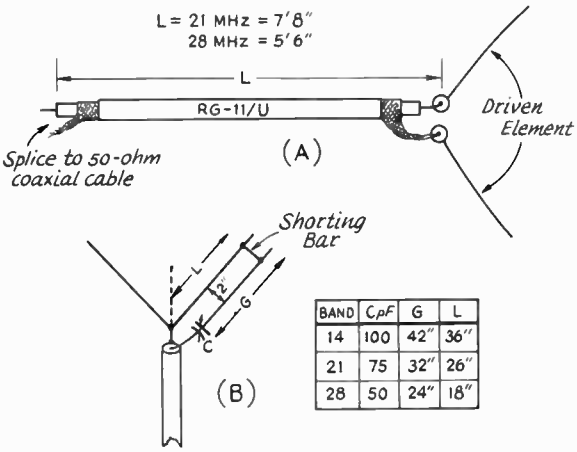

BAND	CpF	G	L
14	100	42"	36"
21	75	32"	26"
28	50	24"	18"

Fig. 21-54 — Matching sections for quad elements.

An interesting four-band quad is shown at Fig. 21-55. This antenna, designed by G3FPQ, is a 4-element beam on 20-, 15-, and 10-meter bands and a 2-element, linear-loaded quad on 40 meters. The 40-meter elements are full-wave loops, folded back on themselves at the sides, as shown in Fig. 21-56. The overall reduction in size is approximately 40 percent from a full-size quad. This means that the sides are only a few feet longer than the 20-meter quad.

A WIDE-SPACED MULTIELEMENT TRI-BAND BEAM

The array shown in Fig. 21-57, originally described in *QST*, December 1970, is a 3-band beam for 20, 15, and 10 meters, with consideration given to optimum gain with minimum losses. The system uses a trapped driven element with single coaxial feed, and has a tri-gamma matching network. Separate directors and reflectors are used on each band. These are spaced for optimum performance. In essence, the antenna is the equivalent to three monoband 3-element beams.

Fig. 21-58 shows the element lengths and spacing for phone and cw. With these element spacings, the bandwidth of the antenna is such that the system can be used on phone or cw with a low SWR, regardless of which dimensions are used.

Telescoping aluminum tubing is used for the elements. The boom is made from two lengths of 2-inch OD aluminum tubing, 12 feet long, with a center joiner of 2 1/4-inch OD, .083-wall tubing which is 4-feet, 3-inches long. All elements are mounted on the boom with Kirk boom-to-element mounts.

The Driven Element

Fig. 21-59A shows the driven element circuit. Fig. 21-59B shows the dimensions for one half of the element. These figures apply for both phone and cw. A cast Plexiglas rod (1 1/4-inch diameter) is used for the trap insulators. A 4-foot length of the rod will provide the required four insulators. Each insulator is 12 inches long.

The Plexiglas rods are held in place, along with the ends of the trap coils, by hose clamps. They are also used on all sections of the antenna where the tubing is telescoped. Do not drill holes in the Plexiglas as this will weaken the material substantially.

The coils for the traps are made from 7/16-inch aluminum fuel-line tubing. Fig. 21-60 shows the details for the construction of the coils and how they mount to the driven element. Capacitors to tune the traps to the desired frequency are made from lengths of RG-8/U coaxial cable. When making up the capacitors, allow at least three inches more than the dimensions shown in Fig. 21-60 (for tuning purposes).

Details of the tri-gamma matching network are shown in Fig. 21-61. Polystyrene tubing, 5/8-inch OD and 1/2-inch ID, should be used for the gamma-capacitor insulating material. If desired, air variables could be used for the gamma capacitors. On 20 meters, a variable capacitor of 150 pF (maximum) would be suitable. Use a value of 100 pF for 15 and 10 meters. Plate spacings of .040 inch or greater will handle 2 kW, PEP. The capacitors could be mounted in a weatherproof box and installed at the boom. The gamma rods, made from 5/8-inch tubing, would have the same overall lengths specified in Fig. 21-61.

Adjustment

When the antenna is completed it should be mounted on a roof or ladder, at least 10 feet above earth. Use a grid-dip meter to check the trap frequencies. Next, the coaxial capacitors should be pruned, about 1/2-inch cuts at a time, to obtain resonance at the correct frequency. The proper frequency for the traps is about 800 kHz below the cw or phone frequencies specified in Fig. 21-58. For example, if the desired operating frequency is 21,300 kHz, the 15-meter traps should resonate at approximately 20,500 kHz. The grid-dip meter should be checked against a receiver of known accuracy to double-check the frequency. Once the coaxial capacitors are trimmed to the correct length, the ends of the coax should be coated with rubber cement for weather-proofing, and the cable is clamped to the element.

To adjust the gamma elements, first apply power to the antenna at the desired frequency, starting at 20 meters. An SWR bridge should be inserted in the feed line, at the antenna. Adjust the gamma capacitor for a perfect match, or the lowest reading possible on the bridge. It may be difficult to get an *exact* match, but the SWR should be below 1.5 to 1. Next, adjust the system for 15 meters, then for 10 meters. The beam should now be ready for installation in its permanent location. If possible, the gamma capacitors can again be adjusted for the best match.

Fig. 21-57 — Here is the triband array with the gamma-matching network still to be installed.

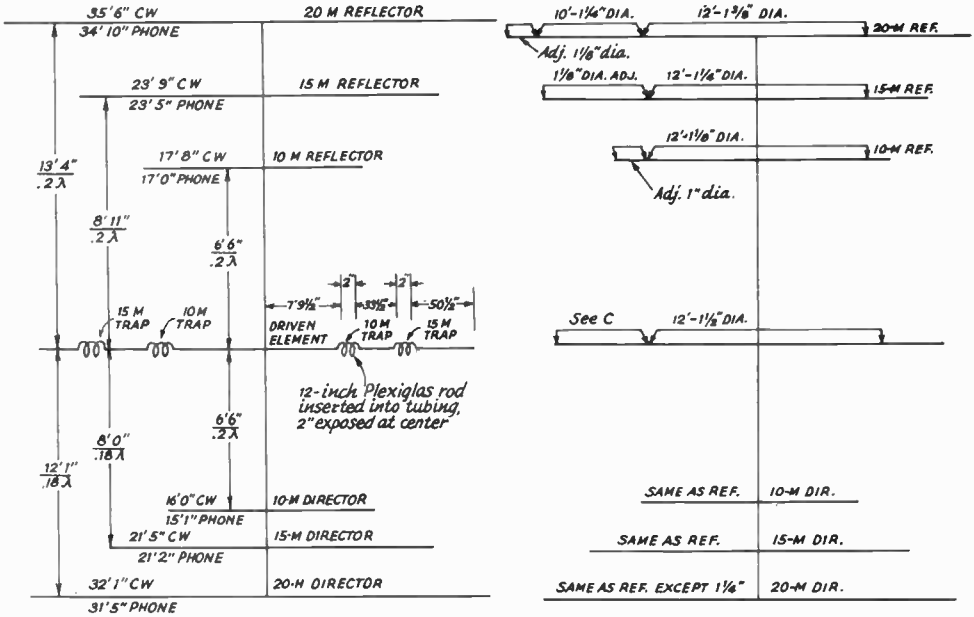

Fig. 21-58 — Element lengths and spacing information for the triband antenna system.

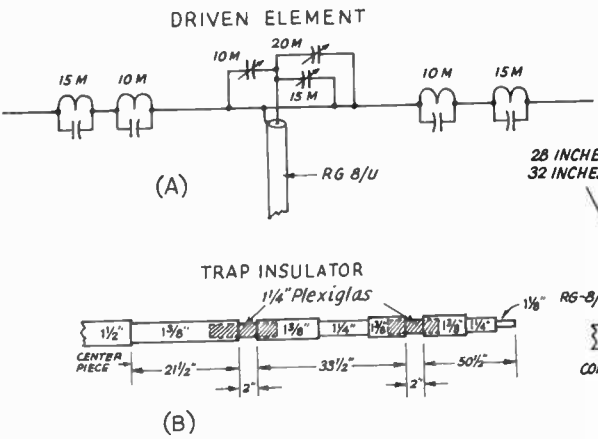

Fig. 21-59 — Electrical circuit of the driven element is shown at A. At B are the dimensions and details for one-half the driven element.

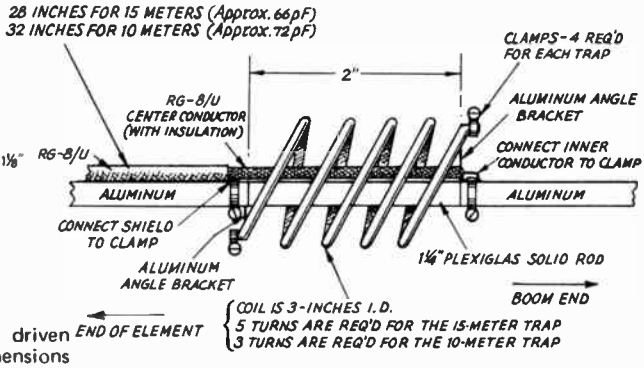

Fig. 21-60 — Here are the details for trap construction.

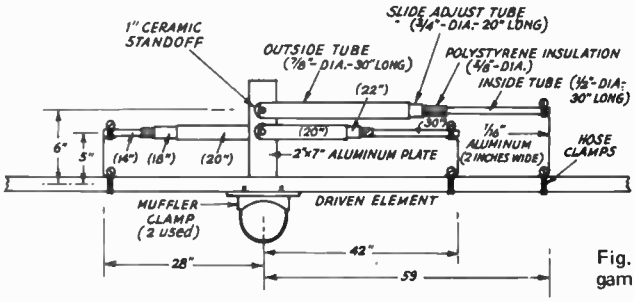

Fig. 21-61 — Details and dimensions for the gamma-matching network.

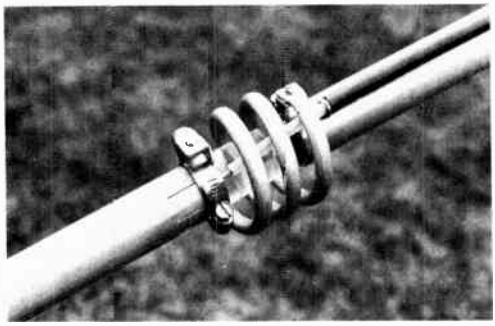

Fig. 21-62 — This is a closeup view of one of the 10-meter traps. Wetherproofing of the traps is not required.

ANTENNA SUPPORTS

"A"-FRAME MAST

The simple and inexpensive mast shown in Fig. 21-63 is satisfactory for heights up to 35 or 40 feet. Clear, sound lumber should be selected. The completed mast may be protected by two or three coats of house paint.

If the mast is to be erected on the ground, a couple of stakes should be driven to keep the bottom from slipping and it may then be "walked up" by a pair of helpers. If it is to go on a roof, first stand it up against the side of the building and then hoist it from the roof, keeping it vertical. The whole assembly is light enough for two men to perform the complete operation – lifting the mast, carrying it to its permanent berth, and fastening the guys – with the mast vertical all the while. It is entirely practicable, therefore, to errect this type of mast on any small, flat area of roof.

By using 2 X 3s or 2 X 4s, the height may be extended up to about 50 feet. The 2 X 2 is too flexible to be satisfactory at such heights.

SIMPLE 40-FOOT MAST

The mast shown in Fig. 21-64 is relatively strong, easy to construct, readily dismantled, and costs very little. Like the "A"-frame, it is suitable for heights of the order of 40 feet.

The top section is a single 2 X 3, bolted at the bottom between a pair of 2 X 3s with an overlap of about two feet. The lower section thus has two legs spaced the width of the narrow side of a 2 X 3. At the bottom the two legs are bolted to a length of 2

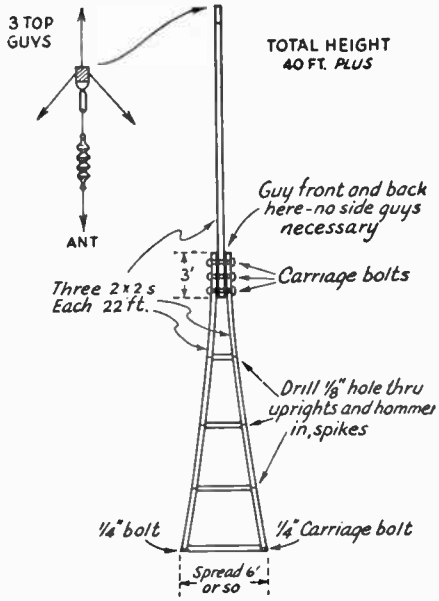

Fig. 21-63 — Details of a simple 40-foot "A"-frame mast suitable for erection in locations where space is limited.

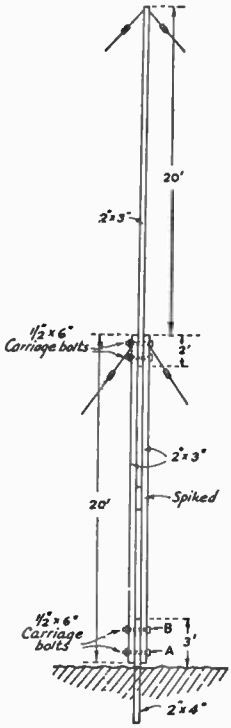

Fig. 21-64 — A simple and sturdy mast for heights in the vicinity of 40 feet, pivoted at the base for easy erection. The height can be extended to 50 feet or more by using 2 X 4s instead of 2 X 3s.

X 4 which is set in the ground. A short length of 2 X 3 is placed between the two legs about halfway up the bottom section, to maintain the spacing.

The two back guys at the top pull against the antenna, while the three lower guys prevent buckling at the center of the pole.

The 2 X 4 section should be set in the ground so that it faces the proper direction, and then made vertical by lining it up with a plumb bob. The holes for the bolts should be drilled beforehand. With the lower section laid on the ground, bolt *A* should be slipped in place through the three pieces of wood and tightened just enough so that the section can turn freely on the bolt. Then the top section may be bolted in place and the mast pushed up, using a ladder or another 20-foot 2 X 3 for the job. As the mast goes up, the slack in the guys can be taken up so that the whole structure is in some measure continually supported. When the mast is vertical, bolt *B* should be slipped in place and both *A* and *B* tightened. The lower guys can then be given a final tightening, leaving those at the top a little slack until the antenna is pulled up, when they should be adjusted to pull the top section into line.

A LOW COST TILT-OVER TOWER

Shown in Figs. 21-65 is a low-cost 30-foot tilt-over tower that can be made from readily available lumber. The tower will easily support a small triband beam or quad, and it can also serve as the midpoint connection for an inverted V. Fig. 21-67 shows the fixed section of the tower, anchored at the bottom in concrete (poured to a depth of 3 feet) and attached at the eaves with lag bolts. The sides of the fixed section are made from 12-foot-long 2 X 6s with 1 X 4 cross members. The inside dimension of the support is given in Fig. 21-66.

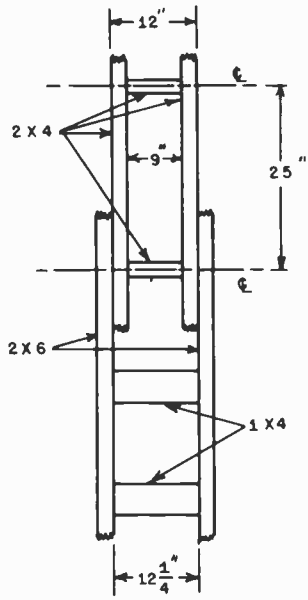

Fig. 21-66 — Constructional details of the fixed and tilt-over sections of the tower.

The tilt-over portion of the tower is made from 2 X 4s 30-feet long. Local lumber companies can order 30-foot (or longer) 2 X 4s. The complete tower cost was less than $35. The cross members of the tilt-over section are 2 X 4s, 9 inches long. These cross members are installed 25 inches apart, center-to-center. Additional bracing is provided by diagonally mounted stringers made from 1 X 2 stock. In the installation shown, the tower is tilted over from the bottom. One-inch diameter bolts installed at the bottom serve as the hinge. Bolts are also used near the eaves to secure the tower when it is in the upright position.

In the installation shown (at W1CUT) the tower had to be mounted against the side of the house, rather than at the end which would be a preferable location. If installed at the end of the house, the tower could be hinged at the roof peak and then tilted over onto the roof (making antenna work a little easier). In the installation shown, two men are required to raise or lower the tower – one man to "walk" the tower down and another on the roof, with a rope or tackle, to lower the assembly.

As shown in Fig. 21-67, the beam rotator is mounted near eaves. TV masting is run up through the center of the tower both as a support for the beam and also as a drive shaft. This serves to

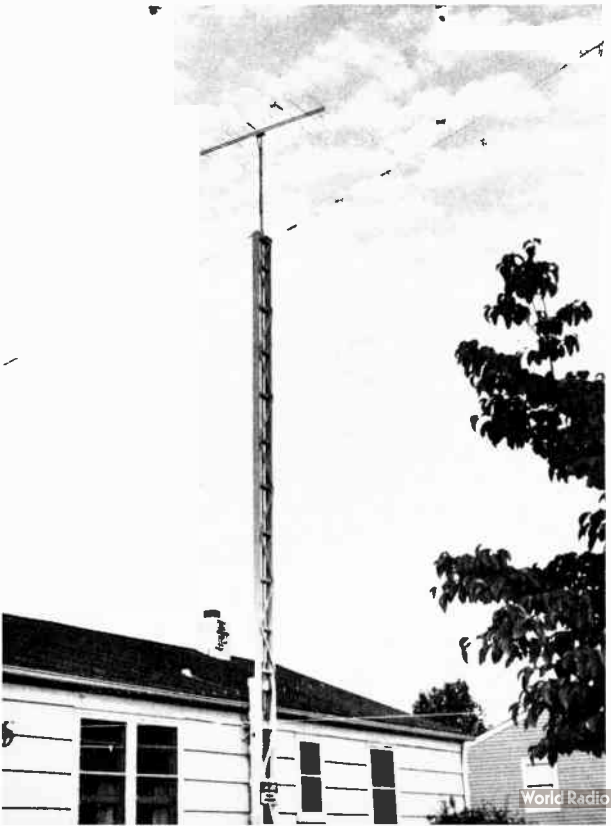

Fig. 21-65 — While guys are not normally required for the homemade tower, they provide an extra measure of protection against high winds. An inverted V can serve here as two of the guy lines.

reduce the amount of weight that the tower has to carry near the top. The rotator shown is a TV type and will easily turn a small triband beam or quad.

GUYS AND GUY ANCHORS

For masts or poles up to about 50 feet, No. 12 iron wire is a satisfactory guy-wire material. Heavier wire or stranded cable may be used for taller poles or poles installed in locations where the wind velocity is likely to be high.

More than three guy wires in any one set usually are unnecessary. If a horizontal antenna is to be supported, two guy wires in the top set will be sufficient in most cases. These should run to the rear of the mast about 100 degrees apart to offset the pull of the antenna. Intermediate guys should be used in sets of three, one running in a direction opposite to that of the antenna, while the other two are spaced 120 degrees either side. This leaves a clear space under the antenna. The guy wires should be adjusted to pull the pole slightly back from vertical before the antenna is hoisted so that when the antenna is pulled up tight the mast will be straight.

When raising a mast that is big enough to tax the available facilities, it is some advantage to know nearly exactly the length of the guys. Those on the side on which the pole is lying can then be fastened temporarily to the anchors beforehand, which assures that when the pole is raised, those holding opposite guys will be able to pull it into nearly vertical position with no danger of its getting out of control. The guy lengths can be figured by the right-angled-triangle rule that "the sum of the squares of the two sides is equal to the square of the hypotenuse." In other words, the distance from the base of the pole to the anchor should be measured and squared. To this should be added the square of the pole length to the point where the guy is fastened. The square root of this sum will be the length of the guy.

Guy wires should be broken up by strain insulators, to avoid the possibility of resonance at the transmitting frequency. Common practice is to insert an insulator near the top of each guy, within a few feet of the pole, and then cut each section of wire between the insulators to a length which will not be resonant either on the fundamental or harmonics. An insulator every 25 feet will be satisfactory for frequencies up to 30 MHz. The insulators should be of the "egg" type with the insulating material under compression, so that the guy will not part if the insulator breaks.

Twisting guy wires onto "egg" insulators may be a tedious job if the guy wires are long and of large gauge. A simple time- and finger-saving device (piece of heavy iron or steel) can be made by drilling a hole about twice the diameter of the guy wire about a half inch from one end of the piece. The wire is passed through the insulator, given a single turn by hand, and then held with a pair of pliers at the point shown in Fig. 21-69. By passing the wire through the hole in the iron and rotating the iron as shown, the wire may be quickly and neatly twisted.

Fig. 21-67 — This close-up shows the rotor and cable installations. A double 2 X 4 is used as the base support for the rotator.

Guy wires may be anchored to a tree or building when they happen to be in convenient spots. For small poles, a 6-foot length of 1-inch pipe driven into the ground at an angle will suffice.

Fig. 21-68 — The tower base support is made from 2 X 6s, the ends of which are in a 3-foot concrete base.

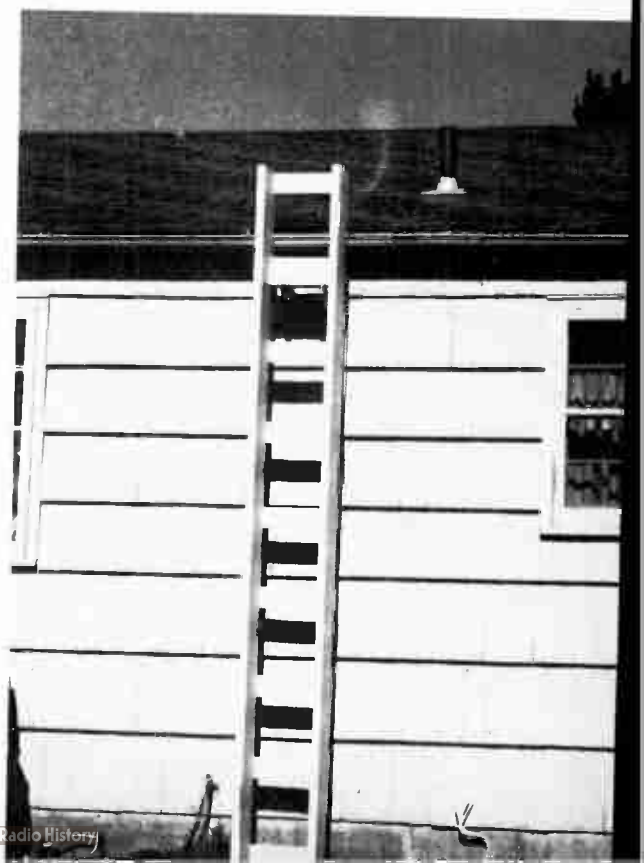

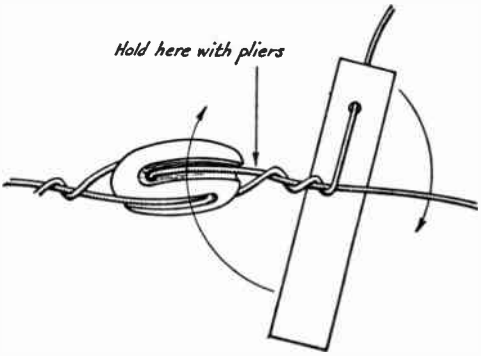

Fig. 21-69 — Using a lever for twisting heavy guy wires.

HALYARDS AND PULLEYS

Halyards or ropes and pulleys are important items in the antenna-supporting system. Particular attention should be directed toward the choice of a pulley and halyards for a high mast since replacement, once the mast is in position, may be a major undertaking if not entirely impossible.

Galvanized-iron pulleys will have a life of only a year or so. Especially for coastal-area installations, marine-type pulleys with hardwood blocks and bronze wheels and bearings should be used.

For short antennas and temporary installations, heavy clothesline or window-sash cord may be used. However, for more permanent jobs, 3/8-inch or 1/2-inch waterproof hemp rope should be used. Even this should be replaced about once a year to insure against breakage.

It is advisable to carry the pulley rope back up to the top in "endless" fashion in the manner of a flag hoist so that if the antenna breaks close to the pole, there will be a means for pulling the hoisting rope back down.

BRINGING THE ANTENNA OR FEED LINE INTO THE STATION

The antenna or transmission line should be anchored to the outside wall of the building, as shown in Fig. 21-71, to remove strain from the lead-in insulators. Holes cut through the walls of the building and fitted with feedthrough insulators are undoubtedly the best means of bringing the line into the station. The holes should have plenty of air clearance about the conducting rod, especially when using tuned lines that develop high voltages. Probably the best place to go through the walls is the trimming board at the top or bottom of a window frame which provides flat surfaces for lead-in insulators. Cement or rubber gaskets may be used to waterproof the exposed joints.

Where such a procedure is not permissible, the window itself usually offers the best opportunity. One satisfactory method is to drill holes in the glass near the top of the upper sash. If the glass is replaced by plate glass, a stronger job will result. Plate glass may be obtained from automobile junk yards, and drilled before placing in the frame. The glass itself provides insulation and the transmission line may be fastened to bolts fitting the holes. Rubber gaskets will render the holes waterproof. The lower sash should be provided with stops to prevent damage when it is raised. If the window has a full-length screen, the scheme shown in Fig. 21-71 B may be used.

As a less permanent method, the window may be raised from the bottom or lowered from the top to permit insertion of a board which carries the feedthrough insulators. This lead-in arrangement can be made weatherproof by making an overlapping joint between the board and window sash, as shown in Fig. 21-70, or by using weatherstrip material where necessary.

Coaxial line can be brought through clearance holes without additional insulation.

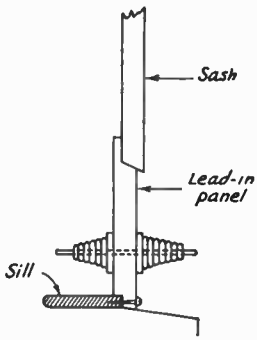

Fig. 21-70 — An antenna lead-in panel may be placed over the top sash or under the lower sash of a window. Substituting a smaller height sash in half the window will simplify the weatherproofing problem where the sash overlaps.

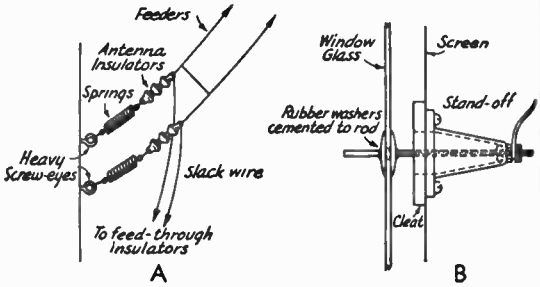

Fig. 21-71 — A — Anchoring feeders takes the strain from feed-through insulators or window glass. B — Going through a full-length screen, a cleat is fastened to the frame of the screen on the inside. Clearance holes are cut in the cleat and also in the screen.

Chapter 22

VHF and UHF Antennas

Improving his antenna system is one of the most productive moves open to the vhf enthusiast. It can increase transmitting range, improve reception, reduce interference problems, and bring other practical benefits. The work itself is by no means the least attractive part of the job. With even high-gain antennas, experimentation is greatly simplified, at vhf and uhf, because an array is a workable size, and much can be learned about the nature and adjustment of antennas. No large investment in test equipment is necessary.

Whether we buy or build our antennas, we soon find that there is no one "best" design for all purposes. Selecting the antenna best suited to our needs involves much more than scanning gain figures and prices in a manufacturer's catalog. The first step should be to establish priorities.

OBJECTIVES

Gain: Shaping the pattern of an antenna, to concentrate radiated energy, or received-signal pickup, in some directions at the expense of others is the only way to develop gain. This is best explained by starting with the hypothetical isotropic antenna, which would radiate equally in all directions. A point source of light illuminating the inside of a globe uniformly, from its center, is a visual analogy. No practical antenna can do this, so all antennas have "gain over isotropic" (dBi). A half-wave dipole in free space has 2.1 dBi. If we can plot the radiation pattern of antenna in all planes, we can compute its gain, so quoting it with respect to isotropic is a logical base for agreement and understanding. It is rarely possible to erect a half-wave antenna that has anything approaching a free-space pattern, and this fact is responsible for much of the confusion about true antenna gain.

Radiation patterns can be controlled in various ways. One is to use two or more driven elements, fed in phase. Such collinear arrays provide gain without markedly sharpening the frequency response, compared to that of a single element. More gain per element, but with a sacrifice in frequency coverage, is obtained by placing parasitic elements longer and shorter than the driven one, in the plane the first element, but not driven from the feedline. The reflector and directors of a Yagi array are highly frequency sensitive and such an antenna is at its best over frequency changes of less than one percent of the operating frequency.

Frequency Response: Ability to work over an entire vhf band may be important in some types of work. The response of an antenna element can be broadened somewhat by increasing the conductor diameter, and by tapering it to something approximating cigar shape, but this is done mainly with simple antennas. More practically, wide frequency coverage may be a reason to select a collinear array, rather than a Yagi. On the other hand, the growing tendency to channelize operations in small segments of our bands tends to place broad frequency coverage low on the priority list of most vhf stations.

Radiation Pattern: Antenna radiation can be made omnidirectional, bidirectional, practically unidirectional, or anything between these conditions. A vhf net operator may find an omnidirectional system almost a necessity, but it may be a poor choice otherwise. Noise pickup and other interference problems tend to be greater with such antennas, and those having some gain are especially bad in these respects. Maximum gain and low radiation angle are usually prime interests of the weak-signal DX aspirant. A clean pattern, with lowest possible pickup and radiation off the sides and back, may be important in high-activity areas, or where the noise level is high.

Height Gain: In general, the higher the better in vhf antenna installations. If raising the antenna clears its view over nearby obstructions, it may make dramatic improvements in coverage. Within reason greater height is almost always worth its cost, but height gain must be balanced against increased transmission-line loss. The latter is considerable, and it increases with frequency. The best available line may be none too good, if the run is long in terms of wavelength. Give line-loss information, shown in table form in Chapter 20, close scrutiny in any antenna planning.

Physical Size: A given antenna design for 432 MHz will have the same gain as one for 144 MHz, but being only one-third the size it will intercept only one-third as much energy in receiving. Thus, to be equal in communication effectiveness, the 432-MHz array should be at least equal in *size* to the 144-MHz one, which will require roughly three times as many elements. With all the extra difficulties involved in going higher in frequency, it is well to be on the big side, in building an antenna for the higher band.

DESIGN FACTORS

Having sorted out objectives in a general way, we face decisions on specifics, such as polarization, type of transmission line, matching methods and mechanical design.

Polarization: Whether to position the antenna elements vertical or horizontal has been a moot point since early vhf pioneering. Tests show little evidence on which to set up a uniform polarization

policy. On long paths there is no consistent advantage, either way. Shorter paths tend to yield higher signal levels with horizontal in some kinds of terrain. Man-made noise, especially ignition interference, tends to be lower with horizontal. Verticals are markedly simpler to use in omnidirectional systems, and in mobile work.

Early vhf communication was largely vertical, but horizontal gained favor when directional arrays became widely used. The major trend to fm and repeaters, particularly in the 144-MHz band, has tipped the balance in favor of verticals in mobile work and for repeaters. Horizontal predominates in other communication, on 50 MHz and higher frequencies. It is well to check in advance in any new area in which you expect to operate, however, as some localities still use vertical almost exclusively. A circuit loss of 20 dB or more can be expected with cross-polarization.

Transmission Lines: There are two main categories of transmission lines: balanced and unbalanced. The former include open-wire lines separated by insulating spreaders, and Twin-Lead, in which the wires are embedded in solid or foamed insulation. Line losses result from ohmic resistance, radiation from the line, and deficiencies in the insulation. Large conductors, closely spaced in terms of wavelength, and using a minimum of insulation, make the best balanced lines. Impedances are mainly 300 to 500 ohms. Balanced lines are best in straight runs. If bends are unavoidable, the angles should be as obtuse as possible. Care should be taken to prevent one wire from coming closer to metal objects than the other. Wire spacing should be less than 1/20 wavelength.

Properly built, open-wire line can operate with very low loss in vhf and even uhf installations. A total line loss under 2 dB per hundred feet at 432 MHz is readily obtained. A line made of No. 12 wire, spaced 3/4 inch or less with Teflon spreaders, and running essentially straight from antenna to station, can be better than anything but the most expensive coax, at a fraction of the cost. This assumes use of baluns to match into and out of the line, with a short length of quality coax for the moving section from the top of the tower to the antenna. A similar 144-MHz setup could have a line loss under 1 dB.

Small coax such as RG-58 or 59 should never be used in vhf work if the run is more than a few feet. Half-inch lines (RG-8 or 11) work fairly well at 50 MHz, and are acceptable for 144-MHz runs of 50 feet or less. If these lines have foam rather than solid insulation they are about 30 percent better. Aluminum-jacket lines with large inner conductors and foam insulation are well worth their cost. They are readily water-proofed, and can last almost indefinitely. Beware of any "bargains" in coax for vhf or uhf uses. Lost transmitter power can be made up to some extent by increasing power, but once lost, a weak signal can never be recovered in the receiver.

Effects of weather should not be ignored. A well-constructed open-wire line works well in nearly any weather, and it stands up well. Twin-Lead is almost useless in heavy rain, wet snow or icing. The best grades of coax are impervious to weather. They can be run underground, fastened to metal towers without insulation, or bent into any convenient position, with no adverse effects on performance.

Impedance Matching

Theory and practice in impedance matching are given in detail in earlier chapters, and theory, at least, is the same for frequencies above 50 MHz. Practice may be similar, but physical size can be a major modifying factor in choice of methods. Only the matching devices used in practical construction examples later in this chapter will be discussed in detail here. This should not rule out consideration of other methods, however, and a reading of relevant portions of Chapters 20 and 21 is recommended.

Universal Stub: As its name implies, the double-adjustment stub of Fig. 22-1A is useful for many matching purposes. The stub length is varied to resonate the system, and the transmission line is tapped onto the stub at the point where line and stub impedances are equal. In practice this involves moving both the sliding short and the point of line connection for zero reflected power, as indicated on an SWR bridge connected in the line.

The universal stub allows for tuning out any small reactance present in the driven part of the

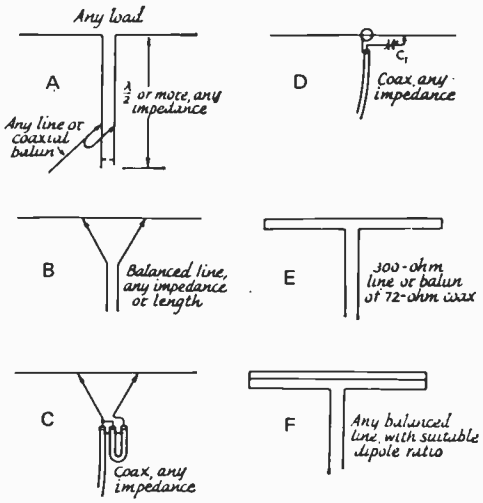

Fig. 22-1 — Matching methods commonly used in vhf antennas. The universal stub, A, combines tuning and matching. The adjustable short on the stub, and the points of connection of the transmission line, are adjusted for minimum reflected power in the line. In the delta match, B and C, the line is fanned out to tap on the dipole at the point of best impedance match. Impedances need not be known in A, B and C. The gamma-match, D, is for direct connection of coax. C1 tunes out inductance in the arm. Folded dipole of uniform conductor size, E, steps up antenna impedance by a factor of 4. Using a larger conductor in the unbroken portion of the folded dipole, E, gives higher orders of impedance transformation.

system. It permits matching antenna to line without knowledge of the actual impedances involved. The position of the short yielding the best match gives some indication of amount of reactance present. With little or no reactive component to be tuned out, the stub will be approximately a half-wavelength from load to short.

The stub should be stiff bare wire or rod, spaced no more than 1/20 wavelength. Preferably it should be mounted rigidly, on insulators. Once the position of the short is determined, the center of the short can be grounded, if desired, and the portion of the stub no longer needed can be removed.

It is not necessary that the stub be connected directly to the driven element. It can be made part of an open-wire line, as a device to match into or out of the line with coax. It can be connected to the lower end of a delta match, or placed at the feedpoint of a phased array. Examples of these uses are given later.

Delta Match: Probably the first impedance match was made when the ends of an open line were fanned out and tapped onto a half-wave antenna, at the point of most efficient power transfer, as in Fig. 22-1B. Both the side length and the points of connection either side of the center of the element must be adjusted for minimum reflected power in the line, but as with the universal stub, the impedances need not be known. The delta makes no provision for tuning out reactance, so the universal stub is often used as a termination for it, to this end.

Once thought to be inferior for vhf applications because of its tendency to radiate if improperly adjusted, the delta has come back to favor, now that we have good methods for measuring the effects of matching. It is very handy for phasing multiple-bay arrays with open lines, and its dimensions in this use are not particularly critical. It should be checked out carefully in applications like that of Fig. 22-1C, having no tuning device.

Gamma Match: An application of the same principle to direct connection of coax is the gamma match, Fig. 22-1D. There being no rf voltage at the center of a half-wave dipole, the outer conductor of the coax is connected to the element at this point, which may also be the junction with a metallic or wooden boom. The inner conductor, carrying the rf current, is tapped out on the element at the matching point. Inductance of the arm is tuned out by means of C1, resulting in electrical balance. Both the point of contact with the element and the setting of the capacitor are adjusted for zero reflected power, with a bridge connected in the coaxial line.

The capacitor can be made variable temporarily, then replaced with a suitable fixed unit when the required capacitance value is found, or C1 can be mounted in a waterproof box. Maximum should be about 100 pF for 50 MHz and 35 to 50 pF for 144. The capacitor and arm can be combined in one coaxial assembly, with the arm connecting to the driven element by means of a sliding clamp, and the inner end of the arm sliding inside a sleeve connected to the inner conductor of the coax. A commercially supplied assembly of this type is used in a 50-MHz array described later, or one can be constructed from concentric pieces of tubing, insulated by plastic sleeving. Rf voltage across the capacitor is low, once the match is adjusted properly, so with a good dielectric, insulation presents no great problem, if the initial adjustment is made with low power level. A clean, permanent high-conductivity bond between arm and element is important, as the rf current flow is high at this point.

Folded Dipole: The impedance of a half-wave antenna broken at its center is 72 ohms. If a single conductor of uniform size is folded to make a half-wave dipole as shown in Fig. 22-1E, the impedance is stepped up four times. Such a folded dipole can thus be fed directly with 300-ohm line with no appreciable mismatch. Coaxial line of 70 to 75 ohms impedance may also be used, if a 4:1 balun is added. (See balun information presented later in this chapter.) Higher impedance step up can be obtained if the unbroken portion is made larger in cross-section than the fed portion, as in 22-1F. For design information, see Chapter 21.

Baluns and Transmatches: Conversion from balanced loads to unbalanced lines, or vice versa, can be performed with electrical circuits, or their equivalents made of coaxial line. A balun made from flexible coax is shown in Fig. 22-2A. The looped portion is an electrical half-wavelength. The physical length depends on the propagation factor of the line used, so it is well to check its resonant frequency, as shown at B. The two ends are shorted, and the loop at one end is coupled to a dip-meter coil. This type of balun gives an impedance stepup of 4 to 1 in impedance, 50 to 200 ohms, or 75 to 300 ohms, typically.

Coaxial baluns giving 1-to-1 impedance transfer are shown in Fig. 22-3. The coaxial sleeve, open at the top and connected to the outer conductor of the line at the lower end (A) is the preferred type. A conductor of approximately the same size as the line is used with the outer conductor to form a quarter-wave stub, in B. Another piece of coax, using only the outer conductor, will serve this purpose. Both baluns are intended to present an infinite impedance to any rf current that might otherwise tend to flow on the outer conductor of the coax.

The functions of the balun and the impedance

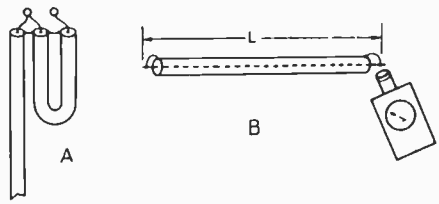

Fig. 22-2 — Conversion from unbalanced coax to a balanced load can be done with a half-wave coaxial balun, A. Electrical length of the looped section should be checked with a dip-meter, with ends shorted, B. The half-wave balun gives a 4:1 impedance step up.

transformer can be handled by various tuned circuits. Such a device, commonly called an antenna coupler or Transmatch, can provide a wide range of impedance transformations. A versatile example is described at the end of this chapter.

The *Q* Section: The impedance transforming property of a quarter-wave line is treated in Chapter 21. The parallel-bar Q section is not useful in low-impedance vhf matching situations, but Q sections of flexible coaxial line may be handy in phasing and matching vhf and uhf arrays. Such sections can be any odd multiple of a quarter-wave-length. An example of two 3/4-wave 75-ohm Q sections, used to phase and match a pair of Yagi bays, each of which has 50 ohms impedance, is given later in this chapter.

Mechanical Design

The small size of vhf and, especially, uhf arrays opens up a wide range of construction possibilities. Finding components is becoming difficult for home constructors of ham gear, but it should not hold back antenna work. Radio and TV distributors have many useful antenna parts and materials. Hardware stores, metals suppliers, lumber yards, welding-supply and plumbing-supply houses and even junkyards should not be overlooked. With a little imagination, the possibilities are endless.

Wood or Metal? Wood is very useful in antenna work, and it is almost universally available, in a great variety of shapes and sizes. Rug poles of wood or bamboo make fine booms. Round wood stock (dowelling) is found in many hardware stores in sizes suitable for small arrays. Square or rectangular boom and frame materials can be ripped to order in most lumber yards, if they are not available from the racks in suitable sizes.

There is no rf voltage at the center of a half-wave dipole or parasitic element, so no insulation is required in mounting elements that are centered in the support, whether the latter is wood or metal. Wood is good for the framework of multibay arrays for the higher bands, as it keeps down the amount of metal in the active area of the array.

Wood used for antenna construction should be well-seasoned and free of knots or damage. Available materials vary, depending on local sources. Your lumber dealer can help you better than anyone else in choosing suitable materials. Joining wood members at right angles is often done advantageously with gusset plates. These can be of thin outdoor-grade plywood or Masonite. Round materials can be handled in ways similar to those used with metal components, with U clamps and with other hardware.

Metal booms have a small "shorting effect" on elements that run through them. With materials sizes commonly employed, this is not more than one percent of the element length, and may not be noticeable in many applications. It is just perceptible with 1/2-inch tubing booms used on 432 MHz, for example. Formula lengths can be used as given, if the matching is adjusted in the frequency range one expects to use. The center frequency of an all-metal array will tend to be 0.5 to 1 percent higher than a similar system built of wooden supporting members.

Element Materials and Dimensions: Antennas for 50 MHz need not have elements larger than 1/2-inch diameter, though up to 1 inch is used occasionally. At 144 and 220 MHz the elements are usually 1/8 to 1/4 inch in diameter. For 420, elements as small as 1/16 inch in diameter work well, if made of stiff rod. Aluminum welding rod, 3/32 to 1/8 inch in diameter is fine for 420-MHz arrays, and 1/8 inch or larger is good for the 220 band. Aluminum rod or hard-drawn wire works well at 144 MHz. Very strong elements can be made with stiff-rod inserts in hollow tubing. If the latter is slotted, and tightened down with a small clamp, the element lengths can be adjusted experimentally with ease.

Sizes recommended above are usable with formula dimensions given in Table 22-1. Larger diameters broaden frequency response; smaller ones sharpen it. Much smaller diameters than those recommended will require longer elements, especially in 50-MHz arrays.

The driven element(s) of a vhf array may be cut from the formula

$$L \text{ (inches)} = \frac{5600}{\text{Freq. (MHz)}}$$

This is the basis for Table 22-1 driven-element information. Reflectors are usually about 5 percent longer, and directors 5 percent shorter, though element spacing and desired antenna bandwidth affect parasitic-element lengths. The closer the reflector and director (especially the latter) are to the driven element the nearer they must be to the driven-element length to give optimum gain. This is another way of saying that close-spaced arrays tend to work effectively over narrower bandwidths than

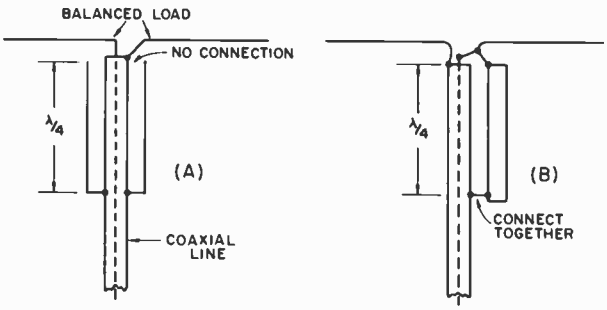

Fig. 22-3 — The balun conversion function, with no impedance change, is accomplished with quarter-wave lines, open at the top and connected to the coax outer conductor at the bottom. Coaxial sleeve, A, is the preferred type.

TABLE 22-I

Dimensions for VHF Arrays in Inches

*Freq. (MHz)**	*50**	*144**	*220**	*432**
Driven Element	111	38 5/8	25 7/16	13
Change per MHz	2	1/4	1/8	1/32
Reflector	116 1/2	40 1/2	26 3/4	13 1/2
1st Director	105 1/2	36 5/8	24 1/8	12 11/32
2nd Director	103 1/2	36 3/8	24	12 9/32
3rd Director	101 1/2	36 1/8	23 7/8	12 7/32
1.0 Wavelength	236	81 1/2	53 5/8	27 1/4
0.625 Wavelength	149	51	33 1/2	17
0.5 Wavelength	118	40 3/4	26 13/16	13 5/8
0.25 Wavelength	59	20 3/8	13 7/8	6 13/16
0.2 Wavelength	47 3/4	16 1/4	10 3/4	5 7/16
0.15 Wavelength	35 1/2	12 1/4	8	4

* Dimensions are for the *most-used* section of each band: 50 to 50.6 MHz, 144 to 145.5 MHz, 220 to 222 MHz, and 432 to 434 MHz. The element lengths should be adjusted for each megahertz difference in frequency by the amount given in the third line of the table. Example: If optimum performance is wanted much above 145 MHz, shorten all elements by about ¼ inch. For above 146 MHz, shorten by ⅓ inch. See text.

Element spacings are not critical, and table figures may be used, regardless of element lengths chosen. Parasitic element lengths are optimum for collinear arrays and small Yagis, having 0.2-wavelength spacing.

wide-spaced ones, though maximum gain may be possible with many different combinations of lengths and spacings.

Parasitic-element lengths of Table 22-I are based on spacings of about 0.2 wavelength, common in relatively short Yagis and collinear arrays. Dimensions given later in the individual descriptions of antennas may be at variance with those of the table. Where this is evident, the length differences result from use of different element spacings, for the most part. Some designs are for maximum gain, without consideration of bandwidth. Still others have slightly modified spacings, to give optimum results with a particular boom length.

ANTENNAS FOR 50 MHz

Simple antennas such as dipoles, groundplanes, mobile whips and the like are covered adequately elsewhere in this *Handbook*. Adaptation of them to vhf work involves mainly reference to Table 22-I for length information. We will be concerned here with arrays that give appreciable gain, or other properties needed in vhf communication.

Yagis, Short and Long: The Yagi array is practically standard for 50-MHz directive use. Usual sizes are three to six elements, though up to eight or nine in line are seen in ambitious installations. Director spacing, after the first three, must be very wide to be worthwhile, so boom lengths of 30 feet or more are needed for more than 6 elements. Though long Yagis certainly are desirable, it should be emphasized that the first two or three elements provide very high gain per unit of space. Even a 3-element Yagi, on as short a boom as 6 feet, is good for 7.5 dB over a dipole. To double the gain (add 3 dB) requires going to only 6 elements – but it takes a boom more than 20 feet long. If it is possible to put up a rotatable antenna at all, there is usually room for at least a 3-element structure, and the gain such an antenna provides is very helpful. Dimensions can follow those given for the first three elements of larger arrays described here.

Stacking Yagis: Where suitable provision can be made for supporting them, two Yagis mounted one above the other and fed in phase may be preferable to one long Yagi having the same theoretical or measured gain. The pair will require a much smaller turning space, for the same gain, and their lower radiation angle can provide interesting results. On long ionospheric paths a stacked pair occasionally may show an *apparent* gain much greater than the 2 to 3 dB that can be measured locally as the gain due to stacking.

Optimum spacing for Yagis of 5 elements or more is one wavelength, but this may be too much for many builders of 50-MHz antennas to handle. Worthwhile results can be obtained with as little as one half-wavelength (10 feet), and 5/8 wavelength (12 feet) is markedly better. The difference between 12 and 20 feet may not be worth the added structural problems involved in the wider spacing, at 50 MHz, at least. The closer spacings give lower measured gain, but the antenna patterns are cleaner than will be obtained with one-wavelength spacing. The extra gain with wider spacings

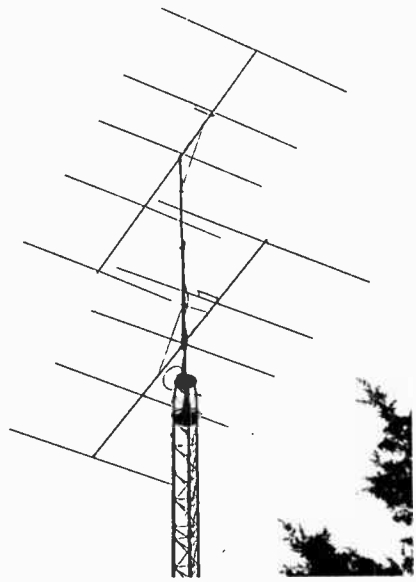

Fig. 22-4 — 5-over-5 stacked-Yagi array for 50 MHz, with all-coax feed.

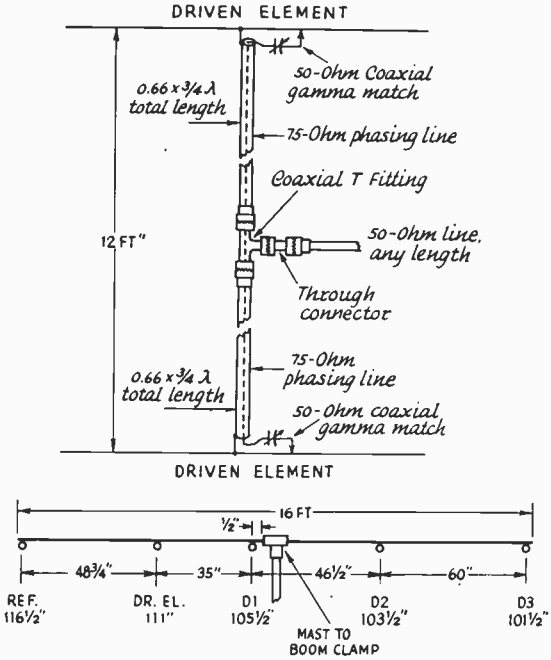

Fig. 22-5 — Principal dimensions of the 50-MHz 5-over-5, with details of the 3/4-wavelength *Q*-section matching system. The propagation factor of 0.66 applies only with solid-dielectric coax. Gamma-matching assemblies are coaxial-capacitor units (Kirk Electronics C6M).

is usually the objective on 144 MHz and higher bands, where the structural problems are not severe.

5-OVER-5 FOR 50 MHz

The information provided in Fig. 22-5 is useful for a single 5-element Yagi, or for the stacked pair of Fig. 22-4, either to be fed with a 50-ohm line. The phasing and matching arrangement may be used for any pair of Yagis designed for 50-ohm feed individually. With slight modification it will serve with Yagis designed for 200-ohm balanced feed.

Mechanical Details

Construction of the single Yagi bay or a stacked pair is simplified by use of components that should be available to most builders. Element-to-boom and boom-to-mast mounts are aluminum castings designed for these applications by Kirk Electronics, 134 Westpark Road, Dayton, Ohio 45459. The gamma matches shown schematically in Fig. 22-5 are of coaxial construction, waterproofed for long life, available from the same supplier.

Booms are made of two 8-foot lengths of 1 1/4-inch aluminum (Reynolds) found in many hardware stores. Reynolds makes a special fitting for joining sections of the tubing, but these are not widely available from the usual hardware-store stocks, so a handmade splice was substituted. A piece of the same-diameter tubing as the booms, 12 inches or more in length, is slotted with a hacksaw, and then compressed to fit inside the ends of the two 8-foot lengths, as seen in Fig. 22-6. If the splice is held in the compressed position with large pipe pliers or a hose clamp, the ends will slide inside the boom sections readily. When the splice is released from compression, the two tubes can be driven together. Self-tapping screws should be run through the tubes and the splice, to hold the assembly firm. Use at least two on each side of the splice.

Elements are 1/2-inch aluminum tubing, Alcoa alloy 6061-T6. Almost any aluminum should be suitable. Kirk Yagi clamps, one-piece aluminum castings designed for this job, are available for 3/8 as well as 1/2-inch elements, and 1 1/4-inch boom. The eyes through which the elements pass are drilled, but must be tapped for 10-32 setscrews to tighten the elements firmly in place, two screws per element. The portion of the clamp that surrounds the boom can be spread slightly to allow the clamp to slide along the boom to the desired point. The interior surface is slightly rough, so tightening the yoke with the screw provided with the clamps makes the element set firmly on the boom. The reflector, driven element and first director are all in back of the boom splice.

The vertical member of the stacked array is 1 1/4-inch thick-wall anodized steel tubing, commonly used in large antenna installations for home TV. Do not use thin-wall aluminum or light galvanized steel masting. The aluminum is not strong enough, and inexpensive steel masting rusts inside, weakening the structure and inviting failure.

Spacing between bays can be a half wavelength (10 feet), 5/8 wavelength (12 feet), or a full wavelength (20 feet), though the wide spacing imposes mechanical problems that may not be worth the effort for most builders. The 5/8-wave spacing is a good compromise between stacking gain and severe support problems, and is recommended with the materials used here.

The 10-foot lengths of steel masting could be used, with the bottom 8 feet running through the tower bearing to the rotator. A heavier main support is preferable, however, and it is "1-inch water pipe" in this installation. This is iron, about 1 3/8-inch outside diameter, extending about 8 feet out of the tower. The steel masting between the Yagi bays is fastened to the pipe with four TV-type U-clamps, spaced evenly in the overlapping area of the two supports.

The booms are braced to the mast fore and aft, using the longest pieces of element stock left over when the forward directors are cut from 12-foot lengths. Ends of the braces are flattened about one inch, and bent to the proper angle. Outer ends fasten to the booms with two self-tapping screws each. The mast ends are clamped to the support with one TV U-clamp for each pair. This bracing is good insurance against fluttering of the booms and elements, which can cause failures after long periods, even though a structure appears adequately strong.

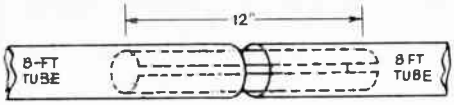

Fig. 22-6 — Details of the boom splices used in the 5-element 50-MHz Yagis. Two 8-foot lengths of 1 1/4-inch tubing are joined to make the 16-foot booms.

Phasing and Matching

A single 5-element Yagi can be fed directly with 50-ohm coax, through the Kirk coaxial gamma-match assembly (Type C6M). This has an adjustable coaxial capacitor, and an arm that connects to the driven element with a sliding clip. Both the capacitor and the point of connection should be adjusted for minimum reflected power, at the center of the frequency range most used. Doing this between 50.2 and 50.4 MHz is suitable for most operators, other than those using fm above 52.5 MHz. Each bay of the stacked pair should be set in this way. The pair can then be fed through a double *Q*-section of 75-ohm coax, as shown in Fig. 22-5.

The Kirk gamma-match assembly has an SO-239 coaxial fitting built in, so the phasing lines are fitted with PL-259 coaxial connectors at both ends. The inner ends attach to a matching coaxial T fitting. The main run of 50-ohm line connects to the center of the T, with a coaxial through-connector and a PL-259 fitting. When the antenna is installed all connectors should be wrapped tightly with plastic tape, and sprayed with Krylon or other protective spray. Dow-Corning Silastic RTV-732 sealant is also good for this use. If the coaxial phasing sections are wrapped around the booms and vertical support a few times, they will just reach the T-fitting, when 12-foot spacing is used.

The lines should be any odd multiple of a quarter-wavelength. If both are the same length the gamma arms should attach to the same side of the driven elements. If there is a half-wavelength difference in the lines, the arms should connect to opposite sides. The length given in Fig. 22-5 is nominal for solid-dielectric coax. If foam-dielectric line is used, the propagation factor given by the maker should be substituted for the 0.66 figure. It is best to grid-dip the line sections for resonant frequency, in any case. Cut the line three inches or more longer than the expected length. Solder a loop of wire between the center pin and the mounting flange of an SO-239 connector. Attach this to the PL-259 connector at one end of the line, and couple it to the dip-meter coil. Trim the line length until resonance at the midpoint of the intended frequency range is indicated. This will not change appreciably when the other coaxial connector is attached.

The line used in the model described is RG-59A/U, which is satisfactory for any amateur power level, so long as the SWR is kept low. Larger coax, such as RG-11A/U, is recommended for a greater margin of safety.

Adjustment and Testing

An individual Yagi can be tested and matched properly by mounting it a half-wavelength above ground, in a large area that is clear of obstructions for many wavelengths. The boom can also be tilted up, until the ground-reflected wave is not a factor in the field-strength meter reading. The SWR bridge should be connected at the gamma match, or an electrical half-wavelength therefrom. Apply low power (not over 10 watts) and adjust the gamma capacitor and the point of connection to the driven element for zero reflected power, at the desired frequency range. The model was flat from 50.2 to 50.4 with just perceptible reflected power showing at 50.1 to 50.5. Adjusted in this way the array should work well up to about 51 MHz.

The best way to check operation of the stacked pair is to support the array with the reflectors resting on the ground and the booms pointing straight up. A 6-foot step-ladder can be used for a temporary support. The bays can be fed separately with 50-ohm line, in this position, and the gamma settings should be the same as obtained in the first check, described above. Now connect the two 75-ohm phasing lines, and insert the SWR bridge in the 50-ohm line to the T fitting. The SWR should be the same as when the bays are fed separately through the 50-ohm line; close to 1:1. The array can be dismantled and reassembled atop the tower, and matching should remain correct.

The matching-phasing system described is useful for any two loads designed for 50-ohm feed. The 5/8-wave spacing is usable with up to at least 6-element bays, though wider bay spacing is needed for maximum gain with long Yagis. Individual antennas intended for 200-ohm balanced feed can be matched with 75-ohm coax in the phasing harness and baluns at each load.

Bay spacing is not critical. Close spacing gives somewhat lower gain, but a very clean pattern. The main lobe gets sharper and larger as spacing is increased, but minor lobes also increase. These take over from the main lobe if spacing of bays is carried too far. The effect of increasing bay spacing is shown graphically in Fig. 8-11 of *The Radio Amateur's VHF Manual*, and associated text.

144 OVER 50

Four phased 144-MHz Yagis are shown mounted above a 50-MHz 6-element Yagi in Fig. 22-7. The latter can be mechanically similar to the 5-element antennas of Fig. 22-4, though this two-band system was built almost entirely by hand. Element spacings are closer than in the 5-element 6-meter arrays, in order to fit 6 elements onto a 20-foot boom. The individual bays of the 2-meter array can be used singly, in pairs, or in the 4-bay system shown. Feed details are given for each application.

6-Element 50-MHz Yagi

The 6-meter elements were designed for light weight, with 1/2-inch tubing for half their length and thin-wall fuel-line tubing inserts for the outer

Fig. 22-7 — Antennas for two bands on a single support. Four 5-element Yagis for 144 MHz, top, have one-wavelength spacing each way. The 50-MHz Yagi is set up to make optimum use of 6 elements on a 20-foot boom.

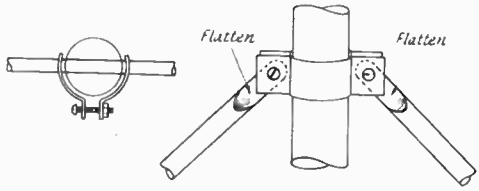

Fig. 22-8 — Elements may be run through a wood or metal boom, and held in place with simple aluminum clamps, left. At the right is a clamp for holding boom braces on the vertical support in the 50-MHz 6-element array.

portions. One-piece half-inch elements are equally good, though a bit bulkier. Elements can be run through the boom and held in place with clamps, as in Fig. 22-8, or mounted in Kirk castings. (See 5-element array description.) Lengths are 116, 110 1/2, 105 1/2, 104, 102 3/4, and 101 1/2 inches. Spacings, in the same order, are 36, 36, 42, 56 and 66 inches. The boom is made of two 10-foot aluminum mast sections, braced from above with 3/4-inch tubing. See Fig. 22-8.

The gamma matching was handled in two different ways. A coaxial capacitor and moving arm was hand-made, as shown in Fig. 22-9 using 1/2-inch and 1/4-inch tubes, insulated from one another by plastic sleeves that just fit inside the 1/2-inch fixed portion. The inner tubing can be wrapped with plastic tape to build up the needed thickness, to the same end. The arm is supported at two points with 1-inch ceramic pillars.

A second and simplier matching arrangement uses merely an extension of the main coaxial line, with a 100-pF fixed transmitting-type capacitor in series with the inner conductor and the sliding contact. The matching point was about 20 inches out from the boom with a 100-pF capacitor. It is suggested that the matching be done first with a variable capacitor, substituting a fixed one when the desired value is found.

An element-mounting clamp no longer available appears in Fig. 22-9. The Kirk 1/2-to-1 1/4-inch element-mounting clamps (see 5-over-5 description) do this job nicely.

5-Element 144-MHz Yagis

An optimum design for 5-element 2-meter Yagis, to be used singly or combined in stacked systems, is shown in Fig. 22-10. Dimensions given work well from 144 to 146 MHz, if the matching is adjusted at 145. Lengths should be reduced 1/4 inch for each megahertz higher center frequency than 145 MHz. The original elements have center sections of 1/4-inch aluminum tubing, with 5/32-inch rod inserts that slide into the center members. One-piece elements of 1/8 to 1/4-inch tubing or rod will work equally well. The larger size will permit fastening in place with self-tapping screws bearing on the elements. For smaller sizes, use a clamp like that of Fig. 22-8. The booms are 3/4- or 1-inch diameter aluminum. Wood dowelling could be used equally well.

Feed Methods: A delta match is used in conjunction with a coaxial-line balun to feed a single 5-element Yagi. Some experimentation with delta dimensions may be required to achieve the best match. (See Fig. 22-1C and detailed description of the delta match earlier in this chapter.) This arrangement makes a fine small Yagi that can be dismantled readily, for carrying about in portable work.

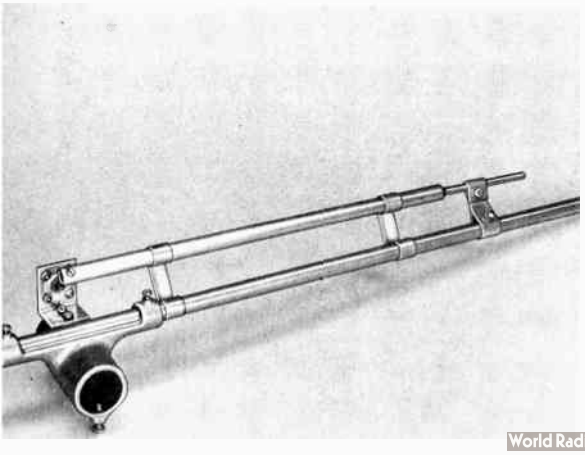

Fig. 22-9 — A hand-made coaxial gamma match for 50-MHz arrays. A 1/4-inch rod or tube 14 inches or longer slides inside a 1/2-inch sleeve that is connected to the coaxial fitting above the boom. The rod slides on plastic sleeves inside the larger section. Separation is maintained with two ceramic pillars mounted with wrap-around clips. Both the coaxial capacitor and the sliding clip between rod and element are adjusted for minimum reflected power in the coaxial line.

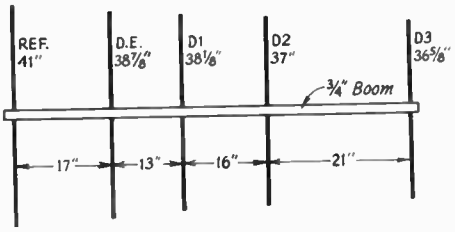

Fig. 22-10 — Optimum design for a 2-meter Yagi, using 5 elements on a 6-foot boom. When used singly, this antenna can be fed as shown in Fig. 22-1C, with 4-inch delta arms connected 3 inches either side of center. The balun loop would be about 27 inches long. With lengths shown, the antenna works well from 144 to above 146 MHz, but gain drops sharply above 147 MHz.

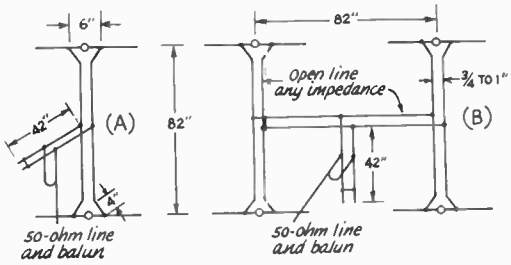

Fig. 22-11 — Stacking details for the 5-element Yagis of Fig. 22-7 and 22-10. The short on the universal stub, and the point of connection of the main transmission line, are adjusted for minimum reflected power in the latter. Balanced line could be connected similarly for the main turn.

Use of two 5-element Yagis with 1-wavelength spacing is shown in Fig. 22-11A. The phasing harness can be any open-wire line, preferably not spaced more than one inch. Delta dimensions are not critical in this application, as the matching is done with the universal stub at the center of the harness.

The 4-bay 20-element system in Fig. 22-7 and 22-11B uses two sets of 5-over-5, connected between centers with another 1-wavelength line. The universal stub is connected at the center of the horizontal section. In each case, the stub length and line-connection point are adjusted for minimum reflected power in the main line.

An interesting phasing method was used in the 4-bay array. Common electric zipcord, available in any hardware store, was split into its two parts. The insulation was left on, and spreaders made of ordinary 1/2-inch wood dowel were used to hold the wires one inch apart. Holes were drilled in these of such size that the zipcord could just be pulled through them. They are held in place with any good cement. If supported with TV-type screweyes that grip the spreaders, such a low-cost line is very durable. The array shown was taken down after two years of use in a very exposed location, and no deterioration was apparent. There was no breakage, even under several heavy ice loads each winter. Using several supports on each harness section is the key to this long life.

The transmission line was switched between the six- and two-meter arrays by means of a waterproofed antenna relay. To avoid the dangers of a 115-volt line run, 6.3-volt transformers were used at each end. This one-line hookup makes it possible to use a single rather expensive line to its fullest potential on two bands.

13-ELEMENT YAGI FOR 144 MHz

Many combinations of element lengths and spacings work well in long Yagis. The 13-element array detailed in Fig. 22-12 is the product of many months of joint experimental work by W2NLY and W6QKI. First described in *QST* for January, 1956, it has been a winner ever since. Elements are 1/8-inch hard-drawn aluminum wire, except for the folded-dipole driven element. This is the step up variety, intended to give a feed impedance of 200 ohms, for feeding with 50-ohm line and a coaxial balun.

The 24-foot boom carries a light load, and can

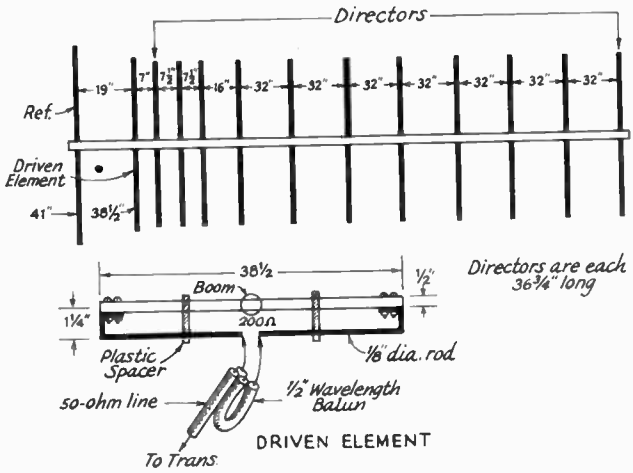

Fig. 22-12 — High-performance long Yagi for 144 MHz, from experimental work by W2NLY and W6QKI. Dimensions are for maximum gain between 144 and 145 MHz.

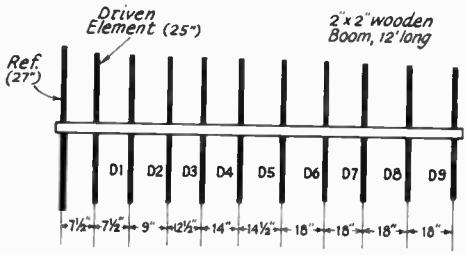

D1 = 23¼"
D2 = 23⅛"
D3 = 23"
D4 = 22⅞"
D5 = 22¾"
D6 = 22⅝"
D7 = 22½"
D8 = 22⅜"
D9 = 22¼"

Fig. 22-13 — 11-element Yagi for 220 MHz. Dimensions are for maximum gain in the lower 2 MHz of the band. Recommended feed method is a delta match, with universal stub and balun. Delta sides should be about 3 inches, tapped 2 inches either side of the element midpoint.

be made of thin-wall tubing if braced in the manner of the 50-MHz arrays previously described. Elements run through the boom and are held in place with clamps, as in Fig. 22-8. Lengths are for optimum gain between 144 and 145 MHz. Gain drops rapidly above 145.2 MHz. For a center frequency of 145 MHz, cut element lengths 1/8 inch. Broader frequency response can be obtained by tapering element lengths 1/8 inch per element, beginning with the second director.

Effective stacking of such long Yagis requires bay spacing of 1 1/2 to 2 wavelengths. Pairs or pairs of pairs can be fed in the manner of Fig. 22-15, using dimensions of Table 22-I.

11-ELEMENT YAGIS FOR 220 AND 432 MHz

High-gain antennas are almost a necessity for any serious work on 220 MHz and higher frequencies. The 11-element Yagis shown in Figs. 22-13 and 14 were worked out experimentally for maximum gain per element. They are intended primarily to be used in stacked pairs or sets of four, as shown (for 432 MHz) in Fig. 22-15.

Elements are stiff wire or welding rod, 1/8-inch diameter for 220, 3/32 or 1/8 inch for 432. Wood booms are shown, and are recommended for stacked arrays, particulary for 432. Metal booms should be 1/2-inch diameter for 432 and 3/4 to 1 inch for 220. Element lengths should be increased 0.5 to 1 percent if metal booms are used.

Frequency coverage without appreciable loss of gain, and no readjustment of matching, is about 1 percent of the operating frequency. Lengths of elements given are for 220 to 222 MHz and 432 to 434 MHz. Coverage can be extended somewhat higher by readjusting the matching for the desired higher frequency.

Recommended phasing is by open-wire line two wavelengths long each way. No. 12 wire spaced 1/2 to 3/4 inch with Teflon spreaders is ideal. If a metal supporting structure is used, it should preferably be entirely in back of the plane of the reflector elements.

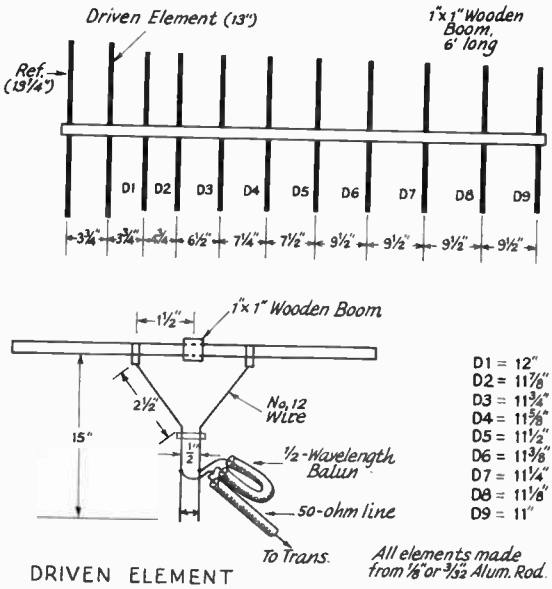

D1 = 12"
D2 = 11⅞"
D3 = 11¾"
D4 = 11⅝"
D5 = 11½"
D6 = 11⅜"
D7 = 11¼"
D8 = 11⅛"
D9 = 11"

Fig. 22-14 — 11-element Yagi for 432 MHz, designed for optimum performance on a 6-foot boom. Operation should be uniform between 432 and 436 MHz, if the stub matching is adjusted when moving more than one megahertz in frequency.

COLLINEAR ANTENNAS

Information given thus far is mainly on parasitic arrays, but the collinear antenna has much to recommend it. Inherently broad in frequency response, it is a logical choice where coverage of an entire band is wanted. This tolerance also makes a collinear easy to build and adjust for any vhf application, and the use of many driven elements is popular in very large phased arrays, such as may be required for moonbounce (EME) communication.

Omnidirectional Verticals

Two or more half-wave elements mounted in a vertical line and fed in phase are often used to build up some gain, without directivity. A simple omnidirectional collinear of rugged construction is shown in Fig. 22-16. It is made entirely of copper pipe and matching elbow fittings, obtainable from plumbing supply houses and some hardware stores.

Initially the phasing stub was operated in the manner of Fig. 22-1A. When the optimum dimensions were found, the assembly was completed by making the angles with plumbing fittings, and the balun connections with bolts, nuts and star lugs.

Preferably the antenna should be mounted on a wooden support, though the center of the stub can be grounded for lightning protection. Dimensions given are for the upper half of the 2-meter band,

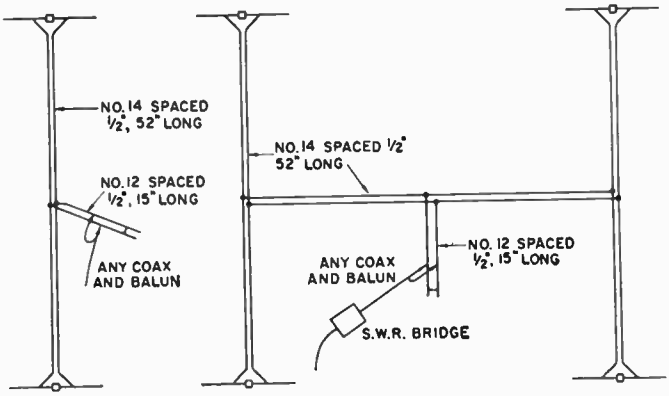

Fig. 22-15 — Phasing methods for using two or four 11-element Yagis for 432 MHz, with 2-wavelength spacing. Universal-stub match permits use of any type of transmission line.

though it works well enough all the way down to 144 MHz.

Any number of radiators can be used, if quarter-wave phasing stubs are connected between them. Commonly an odd number is used, and the center radiator is broken at its midpoint and fed with a universal stub. This type of antenna can be made of wire and strung up in a horizontal position. The pattern is bidirectional when this type of collinear is mounted horizontally.

Large Collinear Arrays

Bidirectional curtain arrays of 4, 6 and 8 half-waves in phase are shown in Fig. 22-17. Usually reflector elements are added, normally at about 0.2 wavelength in back of each driven element, for more gain and a unidirectional pattern. Such parasitic elements are omitted from the sketch in the interest of clarity. Dimensions are not critical, and may be taken from Table 22-1.

When parasitic elements are added, the feed impedance is low enough for direct connection open line or Twin-Lead, connected at the points indicated by black dots. With coaxial line and a balun, it is suggested that the universal stub match, Fig. 22-1A, be used at the feedpoint. All elements should be mounted at their electrical centers, as indicated by open circles in Fig. 22-17. The framework can be metal or insulating material, with equally good results. A model showing the preferred method of assembling an all-metal antenna is pictured in Fig. 22-18. Note that the metal supporting structure is entirely in back of the plane of the reflector elements. Sheet-metal clamps can be cut from scraps of aluminum to make this kind of assembly, which is very light in weight and rugged as well. Collinear elements should always be mounted at their centers, where rf voltage is zero — never at their ends, where the voltage is high and insulation losses and detuning can be very harmful.

Collinear arrays of 32, 48, 64 and even 128 elements can be made to give outstanding performance. Any collinear should be fed at the center of the system, for balanced current distribution. This is very important in large arrays, which are treated as sets of 6 or 8 driven elements each, and fed through a balanced harness, each section of which is a resonant length, usually of open-wire line. A 48-element collinear array for 432 MHz, Fig. 22-19, illustrates this principle.

PLANE AND PARABOLIC REFLECTORS

A reflecting plane, which may be sheet metal, wire mesh, or even closely-spaced elements of tubing or wire, can be used in place of parasitic reflectors. To be effective, the plane reflector must extend on all sides to at least a quarter-wavelength beyond the area occupied by the driven elements. The plane reflector provides high front-to-back ratio, a clean pattern, and somewhat more gain than parasitic elements, but large physical size rules it out for amateur use below 420 MHz. An interesting space-saving possibility lies in using a

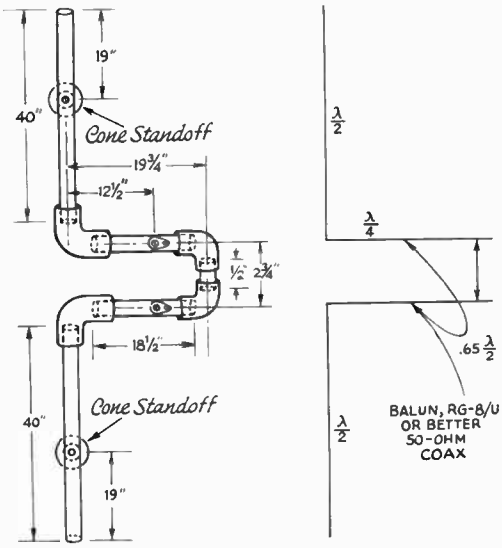

Fig. 22-16 — Rugged 2-meter omnidirectional vertical antenna made entirely of 1/2-inch copper pipe and elbows. The midpoint of the stub can be grounded, for lightning protection.

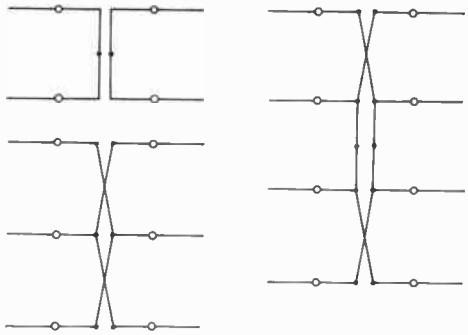

Fig. 22-17 — Element arrangements for 8, 12 and 16-element collinear arrays. Parasitic reflectors, omitted here for clarity, are 5 percent longer and 0.2 wavelength in back of the driven elements. Feed points are indicated by black dots. Open circles are recommended support points. The elements can run through wood or metal booms, without insulation, if supported at their centers in this way. Insulators at the element ends (points of high rf voltage) tend to detune and unbalance the system.

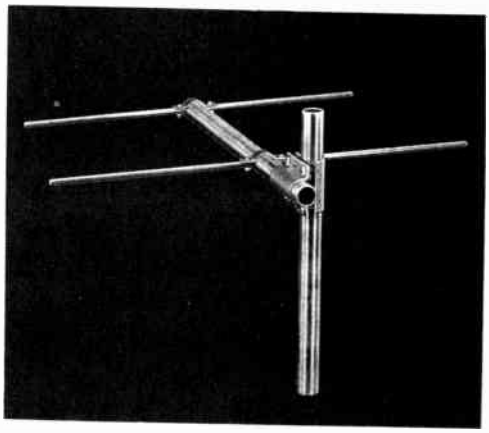

Fig. 22-18 — Model showing recommended method for assembling all-metal arrays. Suitable assembling clips can be cut and bent from sheet aluminum. Supporting structure should be in back of all active elements of the array.

single plane reflector with elements for two different bands mounted on opposite sides. Reflector spacing from the driven element is not critical. About 0.2 wavelength is common.

The reflector can be formed into parabolic shape for a focussing effect, similar to that in a searchlight. Parabolic reflectors must be very large in terms of wavelength. Principles involved in parabolic reflector design are discussed by WA9IIUV in *QST* for June, 1971, page 100.

CIRCULAR POLARIZATION

Polarization is described as "horizontal" or "vertical," but these terms have no meaning once the reference of the earth's surface is lost. Many propagation factors can cause polarization change: reflection or refraction, passage through magnetic fields (Faraday rotation) and, satellite rolling, for examples. Polarization of vhf waves is often random, so an antenna capable of accepting any polarization is useful. Circular polarization, generated with helical antennas or with crossed elements fed 90 degrees out of phase, has this quality.

The circularly-polarized wave, in effect, threads its way through space, and it can be left- or right-hand polarized. These polarization "senses" are mutually exclusive, but either will respond to any plane polarization. A wave generated with right-hand polarization comes back with left-hand, when reflected from the moon, a fact to be borne in mind in setting up EME circuits. Stations communicating on direct paths should have the same polarization sense.

Both senses can be generated with crossed dipoles, with the aid of a switchable phasing harness. With helical arrays, both senses are provided with two antennas, wound in opposite directions.

Helical Antenna for 432 MHz

The 8-turn helix of Fig. 22-20 is designed for 432 MHz, with left-hand polarization. It is made

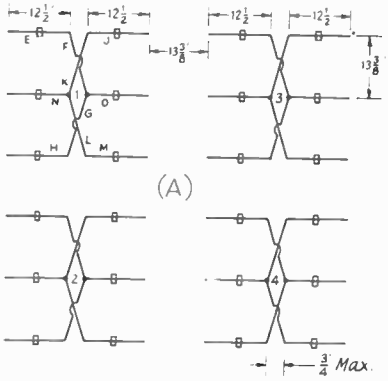

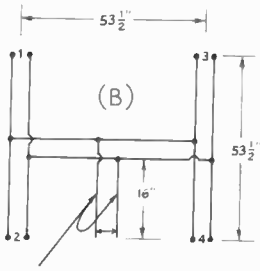

Fig. 22-19 — Large collinear arrays should be fed as sets of no more than 8 driven elements each, interconnected by phasing lines. This 48-element array for 432 MHz (A) is treated as if it were four 12-element collinears. Reflector elements are omitted for clarity. Phasing harness is shown at B.

Fig. 22-20 — An 8-turn 432-MHz helical array, wound from aluminum clothesline wire. Left-hand polarization is shown. Each turn is one wavelength, with a pitch of 0.25 wavelength. Feed is with 50-ohm coax, through an 84-ohm *Q* section.

from 213 inches of aluminum clothesline wire, including 6 inches that are used for cutting back to adjust the feed impedance.

Each turn is one wavelength long, and the pitch is about 0.25 wavelength. Turns are stapled to the wooden supports, which should be water-proofed with liquid fiber glass or exterior varnish. The reflecting screen is one wavelength square, with a Type N coaxial fitting soldered at its center, for connection of the required coaxial *Q* section.

The nominal impedance of a helical antenna is 140 ohms, calling for an 84-ohm matching section to match to a 50-ohm line. This can be approximated with copper tubing of 0.4-inch inside diameter, with No. 10 inner conductor, both 6 1/2 inches long. With the antenna and transformer connected, apply power and trim the outer end of the helix until reflected power approaches zero.

The support arms are made from sections of 1 X 1 wood and are each 60 inches long. The spacing between them is 8.25 inches, outer dimension. The screen of the antenna in Fig. 22-20 is tacked to the support arms for temporary use. A wooden framework for the screen would provide a more rugged antenna structure. The theoretical gain of an 8-turn helical is approximately 14 decibels. Where both right- and left-hand circularity is desired, two antennas can be mounted on a common framework, a few wavelengths apart, and wound for opposite sense.

V BEAMS AND RHOMBICS

By combining long-wire antennas it is possible to realize excellent gain and directivity in vhf and uhf operation. Long-wire antennas can be combined to form V beams or rhombics. When made several wavelengths long on each leg, such antennas peform in an excellent manner for long-haul point-to-point communications.

Information concerning leg lengths and other important dimensions is available in *The ARRL Antenna Book*, all editions.

V beams and rhombics, when not terminated by a non-inductive resistor whose value matches their characteristic impedance, are bidirectional as far as the radiated signal is concerned. When the termination is added at the end of the antenna opposite the feed point, either type becomes unidirectional with maximum radiation off the terminated end.

It is practical to stack one or more vhf rhombic or V-beam antennas for added gain and increased aperture. Either antenna type can be fed with open-wire line and used with a Transmatch of the type described in this chapter.

Rhombic antennas have been used successfully for 144-MHz EME (moonbounce) communications. Their dimensions are such that it is often practical to erect them on ordinary-size city lots. Their usefulness should not be overlooked for point-to-point and DX work.

A TRANSMATCH FOR 50 AND 144 MHz WITH SWR BRIDGE

The antenna coupler (Transmatch) shown in Fig. 22-21 will permit unbalanced transmitter output lines (50-75 ohms) to be matched to balanced feeders in the 300 to 450-ohm impedance range. Also, "coax-to-coax" matching is possible with this circuit, permitting 50-ohm lines to be matched to 75-ohm lines, or vice versa. In situations where a high SWR condition exists — where an antenna is being used in a part of the band to which it has not been tuned — this coupler will enable the transmitter to look into a flat load, thus permitting maximum loading for better efficiency. The Transmatch will of course permit matching between unbalanced lines of like impedance as well — 50-ohm to 50-ohm, or 75-ohm to 75-ohm lines.

Couplers of this type are beneficial in the

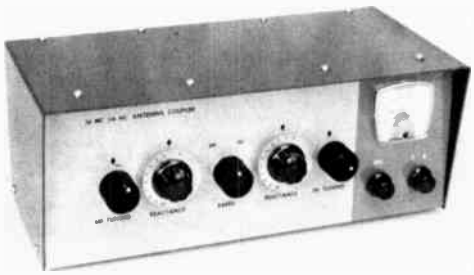

Fig. 22-21 — This 6- and 2-meter antenna coupler has a built-in SWR bridge and permits power levels up to 500 watts. This unit will work with balanced or unbalanced feeders.

reduction of harmonic energy from the transmitter, an aid to TVI reduction. It should be possible to realize a 30-dB-or-greater decrease in harmonic level by using this Transmatch between the transmitter and the feed line. When connected ahead of the receiver as well – a common arrangement – the added selectivity of the coupler's tuned circuits will help to reduce images and other undesired receiver responses from out-of-band signals. The built-in Monimatch-type SWR indicator[1] enables the operator to tune the Transmatch for minimum reflected power, assuring a good match between the transmitter and the feed line. It is wise to remember that the use of devices of this kind *will not* correct for any mismatch that exists at the antenna end of the line. Although it assures a good match between the transmitter and the line, it can only disguise the fact that a mismatch exists at the antenna.

[1] "Monimatch Mark II," Feb., 1957, *QST*.

The Circuit

Balanced circuits are used for both bands, Fig. 22-22. Butterfly capacitors are employed to aid in securing good circuit symmetry. The links of each tuned circuit, L2 and L3, are series tuned by single-ended capacitors to help tune out reactance in the line. Switch S1 transfers the SWR bridge element from one tuned circuit to the other,

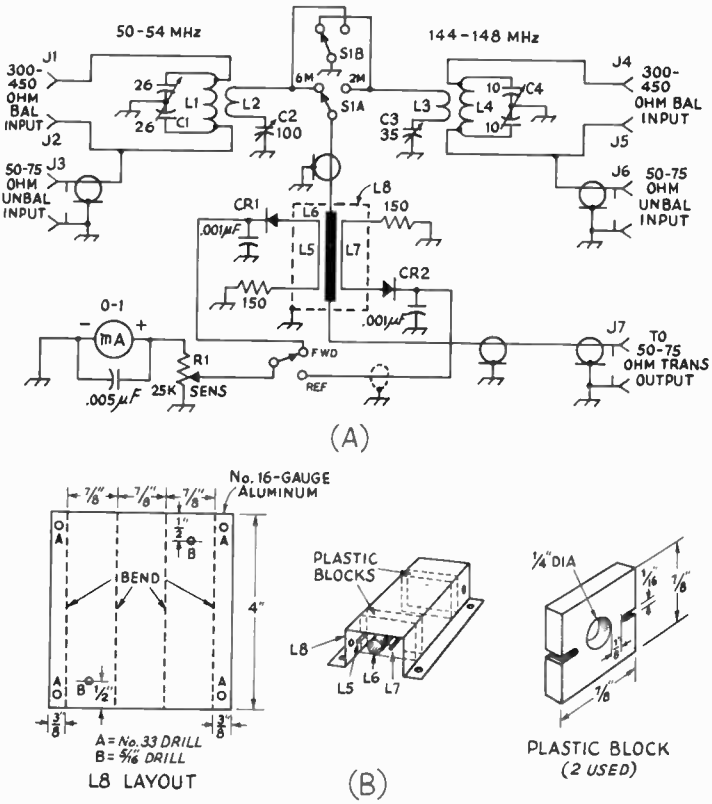

Fig. 22-22 – At A, the schematic diagram of the vhf Transmatch. Capacitance is in pF unless otherwise noted. Resistance is in ohms, k = 1000. At B, physical layout of the bridge element and the plastic insulating blocks.

C1 – 26-pF per section butterfly (E. F. Johnson 167-22).
C2 – 100-pF miniature variable (Millen 20100).
C3 – 35-pF miniature variable (Millen 20035).
C4 – 10-pF per section butterfly (E. F. Johnson 167-21).
CR1, CR2 – Germanium diode, 1N34A or equiv.
J1-J4, incl. – Insulated binding post.
J5-J7, incl. – SO-239-style chassis connector.
L1 – 7 turns No. 10 copper wire, 1 1/2-inch dia, spaced one wire thickness between turns. Tap 2 1/2 turns from each end.
L2 – 2 turns No. 14 enam. or spaghetti-covered bare wire, 2/2-inch dia, over center of L1.
L3 – 2 turns No. 14 enam. or spaghetti-covered bare wire, 1 1/2-inch dia, over center of L4.
L4 – 5 turns No. 10 copper wire, 1-inch dia, spaced one wire thickness between turns. Tap 1 1/2 turns from each end.
L5 – 3-inch length of No. 16 solid wire.
L6 – 4-inch length of 1/4-inch dia copper tubing.
L7 – Same as L5.
L8 – See drawing.
R1 – 25,000-ohm control, linear taper.
S1 – 2-pole 2-position rotary, single section, phenolic switch (Centralab 1462).
S2 – Spst rotary, single section, phenolic switch (Centralab 1460).

providing visual indication of the matching adjustments. A section of S1 (S1B) shorts out the unused tuned circuit to prevent interaction between the circuits. Switch S2 selects either the forward- or reflected-power sampling circuits from the bridge and supplies their rectified dc voltages to R1, the meter sensitivity control. R1 is used to adjust M1 to full scale when S2 is set to read forward power.

Construction

A homemade 12 X 5 X 5-inch aluminum cabinet is used to contain the circuit.[2] If a similar layout is followed keeping all leads as short as practical, there is no reason why the complete unit cannot be housed in a commercially available chassis or cabinet. The rf tuning controls are mounted in a straight line across the front of the cabinet. The SWR bridge element, Fig. 22-22B, is bolted to the bottom of the case (inside) between he input jack, J7, and the band-change switch, S1. hielded audio cable is used to connect the output f the bridge to the lugs on S2. Short lengths of :G-58/U coax cable connect L2 and L3 to S1A. .he shield braids of both cables should be grounded to the chassis at each end.

A 2-lug terminal strip is bolted to the chassis directly under the center of L1. Similarly, a second terminal strip with two lugs is mounted under the midpoint of L4. These strips serve as mounting points for links L2 and L3. No. 12 bus wire (bare) connects the rotors of all four tuning capacitors to one another. The ground bus is also connected to the main chassis at one point. This procedure assures a better ground return for the capacitors than might be possible by relying upon the physical contact provided by the shaft bushings.

The coil taps are effected by bending standard No. 6 solder lugs around the coil wire at the proper spots, then soldering the lugs in place. No. 20 bus wire is used to connect the taps of L1 to jacks J1 and J2. A short piece of 300-ohm twin line connects the taps of L4 to J4 and J5. A No. 6 solder lug is bolted to the outside (back) of the cabinet as near to J1 as possible. Another such lug is placed adjacent to J4. When operating coax-to-coax style, a short jumper wire connects J1 to its ground lug, or J4 to its ground lug, depending on the band being operated. *The jumper must be removed for balanced-feeder operation.*

The cabinet is finished in two-tone gray. Masking tape was used to facilitate the division between the two colors. Standard aerosol-type spray-can paints were used. Decals were added to identify the controls and to give the unit a professional look.

The Bridge Element

The SWR element is of the Monimatch variety, popularized in *QST* in the 1950s.[1] The circuit is given in Fig. 22-22A, with its physical layout shown in Fig. 22-22 at B. The inner line, L6, is a 4-inch length of 1/4-inch OD copper tubing. One end of L6 is soldered directly to the center lug of J7, the remaining end supported by a small standoff insulator. The line is mounted in plastic blocks for additional support, making sure that it is centered within the walls of L8, the aluminum outer channel. J7 should be mounted on the back wall of the box so as to be centered on the axis of L6 when it is in position. The pickup lines, L5 and L7, are made from No. 16 wire, each 3 inches in

2 "The Easy Box," September 1966, *QST*.

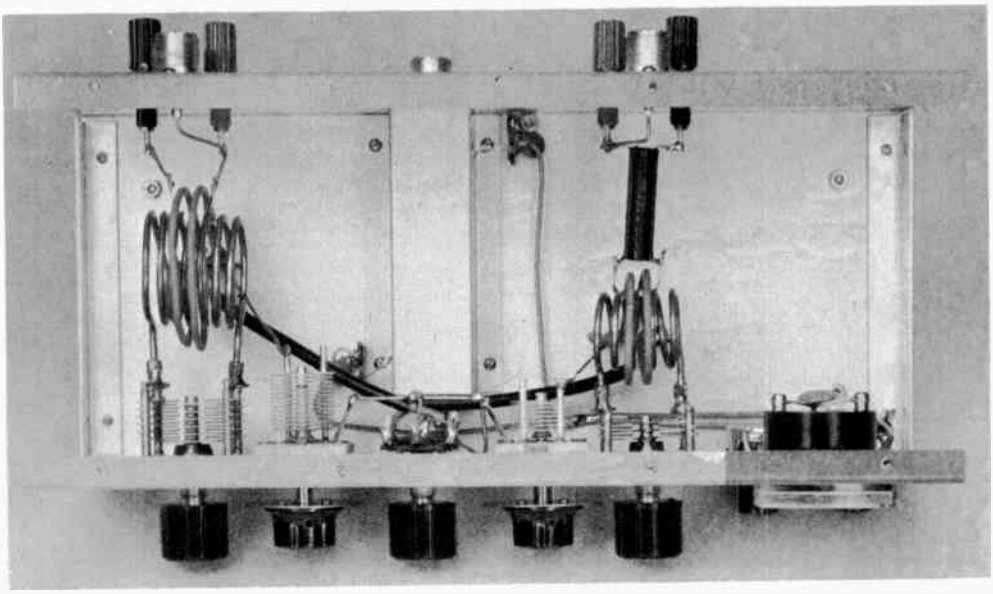

Fig. 22-23 — Inside view of the Transmatch. The 6-meter circuit is at the left, the SWR bridge element is at the center, and the 2-meter circuit is to the right of the bridge element. The meter, S2, and R1 are at the far right.

length, and are spaced 1/8 inch away from L6, being supported by the plastic blocks. Once they are in place, a drop of Duco cement should be added at each point where they pass through the plastic blocks, thus securing them. The 150-ohm terminating resistors (1/2-watt units) are mounted inside the channel, L8, and are soldered to ground lugs. Diodes CR1 and CR2 attach to the remaining ends of wires and are routed out through small holes in the walls of L8. It is important that the physical placement of the diodes, the resistors, and the pickup wires be executed in symmetrical fashion. The better the symmetry, the better will be the balance of the bridge, electrically. The diodes and their related 0.001-μF bypass capacitors are attached to small terminal strips that are mounted near the holes in L8. If matched resistors and matched diodes are used in the bridge circuit, electrical balance will be even better than is possible with random-selected components. Since the bridge is a relative-reading instrument, the latter condition is not vital.

Operation

Attach the vhf transmitter to J7 with a short length of coax cable. Connect a balanced feeder to J1 and J2 (for 50-MHz operation), or to J4 and J5 (for 144-MHz operation). Set S1 to the desired band position and switch S2 to read forward power. Initially, R1 should be set for minimum meter sensitivity. Apply power from the transmitter – low power until initial tuning is completed – and adjust R1 for full-scale meter reading. Next, set S2 to the reflected-power position. Adjust C1 and C2, alternately (for 50-MHz operation) for minimum meter reading. For 144-MHz operation, tune C3 and C4 in the same manner. Repeat the tuning until no further reduction in reflected power is possible. The meter should fall to zero, indicating a 1:1 match. Switch S2 back to the forward position and set R1 for a full-scale meter reading. No further adjustments will be needed until the transmitter frequency is moved 50 kHz or more. The tuning procedure is identical for matching coax to coax. In doing so, however, the antenna feed line (coax) is connected to either J3 or J6 and the shorting strap (discussed earlier) must be connected to J1 or J4. In some situations, it may be possible to get a better match by leaving the shorting strap off.

After the coupler is tuned up, the transmitter power can be increased to its normal level. This unit will handle power levels up to 500 watts (transmitter output power) provided the coupler is tuned for a matched condition at all times. Reduced power (less than 50 watts) should be used during initial tune up, thus preventing parts from being damaged by heating or arcing. The coupler should *never* be operated without a load connected to its output terminals. Such operation will usually destroy the 150-ohm resistors and the diodes, CR1 and CR2, in addition to causing arcs in the Transmatch.

Chapter 23

Assembling a Station

The actual location inside the house of the "shack" – the room where the transmitter and receiver are located – depends, of course, on the free space available for amateur activities. Fortunate indeed is the amateur with a separate room that he can reserve for his hobby, or the few who can have a special small building separate from the main house. However, most amateurs must share a room with other domestic activities, and amateur stations will be found tucked away in a corner of the living room, a bedroom, or even a large closet! A spot in the cellar or the attic can almost be classed as a separate room, although it may lack the "finish" of a normal room.

Regardless of the location of the station, however, it should be designed for maximum operating convenience and safety. It is foolish to have the station arranged so that the throwing of several switches is required to go from "receive" to "transmit," just as it is silly to have the equipment arranged so that the operator is in an uncomfortable and cramped position during his operating hours. The reason for building the station as safe as possible is obvious, if you are interested in spending a number of years with your hobby!

CONVENIENCE

The first consideration in any amateur station is the operating position, which includes the operator's table and chair and the pieces of equipment that are in constant use (the receiver, send-receive switch, and key or microphone). The table should be as large as possible, to allow sufficient room for the receiver or receivers, transmitter frequency control, frequency-measuring equipment, monitoring equipment, control switches, and keys and microphones, with enough space left over for the logbook, a pad and pencil. Suitable space should be included for radiogram blanks and a Callbook, if these accessories are in frequent use. If the table is small, or the number of pieces of equipment is large, it is often necessary to build a shelf or rack for the auxiliary equipment, or to mount it in some less convenient location in or under the table. If one has the facilities, a semicircular "console" can be built of wood, or a simpler solution is to use two small wooden cabinets to support a table top of wood or Masonite. A flush-type door will make an excellent table top. Homebuilt tables or consoles can be finished in any of the available oil stains, varnishes, paints or lacquers. Many operators use a large piece of plate glass over part of their table, since it furnishes a good writing surface and can cover miscellaneous charts and tables, prefix lists, operating aids, calendar, and similar accessories.

If the major interests never require frequent band changing, or frequency changing within a band, the transmitter can be located some distance from the operator, in a location where the meters can be observed from time to time. If frequent band or frequency changes are a part of the usual operating procedure, the transmitter should be mounted close to the operator, either along one side or above the receiver, so that the controls are easily accessible without the need for leaving the operating position.

A compromise arrangement would place the VFO or exciter at the operating position and the transmitter proper in some convenient location not adjacent to the operator. Since it is usually possible to operate over a portion of a band without retuning the transmitter stages, an operating position of this type is an advantage over one in which the operator must leave his position to change frequency.

Controls

The operator has an excellent chance to exercise his ingenuity in the location of the operating

This modern-day operating position, built by W1ETU, is made from plywood and uses steel angle brackets to hold the wooden panels together. Cut outs in the console permit easy access to the equipment while enclosing the station wiring. This type of construction is ideal when the operating position is accessible to small children.

controls. The most important controls in the station are the receiver tuning dial and the send-receive switch. The receiver tuning dial should be located four to eight inches above the operating table, and if this requires mounting the receiver off the table, a small shelf or bracket will do the trick. With the single exception of the amateur whose work is almost entirely in traffic or rag-chew nets, which require little or no attention to the receiver, it will be found that the operator's hand is on the receiver tuning dial most of the time. If the tuning knob is too high or too low, the hand gets cramped after an extended period of operating, hence the importance of a properly located receiver. The majority of cw operators tune with the left hand, preferring to leave the right hand free for copying messages and handling the key, and so the receiver should be mounted where the knob can be reached by the left hand. Phone operators aren't tied down this way, and tune the communications receiver with the hand that is more convenient.

The hand key should be fastened securely to the table, in a line just outside the right shoulder and far enough back from the front edge of the table so that the elbow can rest on the table. A good location for the semiautomatic or "bug" key is right next to the hand-key, although some operators prefer to mount the automatic key in front of them on the left, so that the right forearm rests on the table parallel to the front edge.

The best location for the microphone is directly in front of the operator, so that he doesn't have to shout across the table into it, or run up the speech-amplifier gain so high that all manner of external sounds are picked up. If the microphone is supported by a boom or by a flexible "goose neck" it can be placed in front of the operator without its base taking up valuable table space.

In any amateur station worthy of the name, it should be necessary to throw no more than one switch to go from the "receive" to the "transmit" condition. In phone stations, this switch should be located where it can be easily reached by the hand that isn't on the receiver. In the case of cw operation, this switch is most conveniently located to the right or left of the key, although some operators prefer to have it mounted on the left-hand side of the operating position and work it with the left hand while the right hand is on the key. Either location is satisfactory, of course, and the choice depends upon personal preference. Some operators use a foot- or knee-controlled switch, which is a convenience but doesn't allow too much freedom of position during long operating periods.

If the microphone is hand held during phone operation a "push-to-talk" switch on the microphone is convenient, but hand-held microphones tie up the use of one hand and are not too desirable, although they are widely used in mobile and portable work.

The location of other switches, such as those used to control power supplies, and phone/cw changeover, is of no particular importance, and they can be located on the unit with which they are associated. This is not strictly true in the case of the phone/cw DX man, who sometimes has need to change in a hurry from cw to phone. In this case, the changeover switch should be at the operating table, although the actual changeover may be done by a relay controlled by the switch.

If a rotary beam is used the control of the beam should be convenient to the operator. The direction indicator, however, can be located anywhere within sight of the operator, and does not have to be located on the operating table unless it is included with the control.

Frequency Spotting

The operator should be able to turn on only the oscillator of his transmitter, so that he can spot accurately his location in the band with respect to other stations. This allows him to see if he has anything like a clear channel, or to see what his frequency is with respect to another station. Such a provision can be part of the "send-receive" switch. Switches are available with a center "off" position, a "hold" position on one side, for turning on the oscillator only, and a "lock" position on the other side for turning on the transmitter and antenna relay. If oscillator keying is used, the key serves the same purpose, provided a "send-receive" switch is available to disable the rest of the transmitter and prevent a signal going out on the air during adjustment of the oscillator frequency.

For phone operation, the telegraph key or an auxiliary switch can control the transmitter oscillator, and the "send-receive" switch can then be wired into the control system so as to control the oscillator as well as the other circuits.

Comfort

Of prime importance is the comfort of the operator. If you find yourself getting tired after a short period of operating, examine your station to find what causes the fatigue. It may be that the chair is too soft or hasn't a straight back or is the wrong height for you. The key or receiver may be located so that you assume an uncomfortable position while using them. If you get sleepy fast, the ventilation may be at fault.

POWER CONNECTIONS AND CONTROL

Following a few simple rules in wiring your power outlets and control circuits will make it an easy job to change units in the station. If the station is planned in this way from the start, or if the rules are recalled when you are rebuilding, you will find it a simple matter to revise your station from time to time without a major rewiring job.

It is neater and safer to run a single pair of wires from the outlet over to the operating table or some central point, rather than to use a number of adapters at the wall outlet.

Interconnections

The ac wiring of most stations will entail little more than finding sufficient wall outlets to accept the power-cable plugs from the several units. However, a more sophisticated station would provide the various outlets at some inconspicuous area

at the operating table or console. If the transmitter power is in excess of 500 watts it is advisable to provide 230 volts for its power supply (if it will work from 230 volts) rather than the more common 117-volt source. The higher voltage source will provide better regulation, and the house lights are less likely to "blink" with keying or modulation. A single switch, either on the wall of the "shack" or at the operating position, should control all of the 117- and 230-volt outlets; this makes it a simple matter to turn on the station to the "standby" condition.

The nature of the send-receive control circuitry depends so much upon the equipment in use that it is impossible to give anything but the broadest principles to follow. With commercial equipment, the instruction books usually provide some suggestions. In some cases the antenna-transfer relay is provided also, so that the antenna is connected to the transmitter and a cable from the transmitter is connected to the receiver. Normally the receiver is connected to the antenna through this relay. When the transmitter is "on" the relay transfers the antenna to the transmitter output circuit.

Lacking a built-in antenna transfer relay, many amateurs make do with a short separate wire for the receiving antenna. While this is acceptable in many instances, it is seldom as effective (on receiving) as using the same antenna for transmitting and receiving. A separate antenna relay can be used; several models are available, for use with coaxial or open-wire line. Models are available for use with 117-volt ac or 12-volt dc. Some have an auxiliary set of contacts that can be used to control the transmitter "on" function and the receiver "mute" circuit.

Break-In and Push-To-Talk

In cw operation, "break-in" is any system that allows the transmitting operator to hear the other station's signal during the "key-up" periods between characters and letters. This allows the sending station to be "broken" by the receiving station at any time, to shorten calls, ask for "fills" in messages, and speed up operation in general. With present techniques, it requires the use of a separate receiving antenna or an electronic "T-R" switch and, with high power, some means for protecting the receiver from the transmitter when the key is "down." If the transmitter is low-powered (50 watts or so), no special equipment is required except the separate receiving antenna and a receiver that "recovers" fast. Where break-in operation is used, the output stage should be disabled when adjusting the oscillator to a new frequency, to avoid radiating an unnecessary signal.

"Push-to-talk" is an expression derived from the "PUSH" switch on some microphones, and it means a phone station with a single control for all changeover functions. Strictly speaking, it should apply only to a station where this single send-receive switch must be held in place during transmission periods, but any fast-acting switch will give practically the same effect. A control switch with a center "OFF" position, will give more flexibility than a straight "push" switch. The one switch must control the transmitter, the receiver "on-off" circuit and, if one is used, the antenna changeover relay. The receiver control is necessary to disable its output during transmit periods, to avoid acoustic feedback. A "foot switch" on the floor at the operating position is a convenient control.

Many ssb transmitters provide for "VOX" (voice-controlled) operation, where the transmitter is turned on automatically at the first voice syllable and is held on for a half second or more after the voice stops. Operation with a VOX-operated ssb transmitter is similar to cw break-in, in that a separate receiving antenna or an antenna transfer relay or an electronic T-R switch is required.

Switches and Relays

It is dangerous to use an overloaded switch in the power circuits. After it has been used for some time, it may fail, leaving the power on the circuit even after the switch is thrown to the "OFF" position. For this reason, large switches, or relays with adequate ratings, should be used to control the plate power. Relays are rated by coil voltages (for their control circuits) and by their current and voltage ratings. Any switch or relay for the power-control circuits of an amateur station should be conservatively rated; overloading a switch or relay is very poor economy. Switches rated at 20

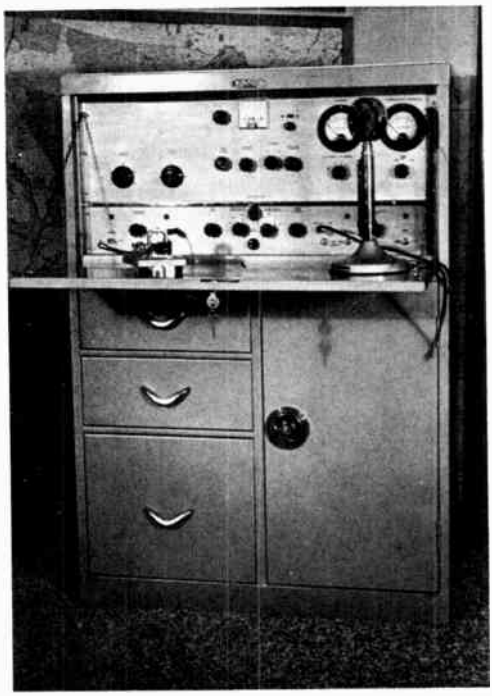

A practical solution for the limited-space dweller is shown here. This neat homebuilt ham station is housed in a metal filing cabinet/desk combination. When not in use, the station can be closed up and locked, making it accessible to only the operator. (This station was designed and built by WB2FSV.)

This modern amateur radio station is equipped for use in the hf bands. The gear is neatly arranged to provide the operator (K1ZND) with easy access to the various units. The foundation is made from plywood fashioned in the form of a console. The station belongs to K1THQ.

ampers at 125 volts will handle the switching of circuits at the kilowatt level, but the small toggle switches rated 3 ampers at 125 volts should be used only in circuits up to about 150 watts.

When relays are used, the send-receive switch closes the circuits to their coils. The energized relays close the heavy-duty relay contacts. Since the relay contacts are in the power circuit being controlled, the switch handles only the relay-coil current. As a consequence, this switch can have a low current rating.

SAFETY

Of prime importance in the layout of the station is the personal safety of the operator and of visitors, invited or otherwise, during normal operating practice. If there are small children in the house, every step must be taken to prevent their accidental contact with power leads of any voltage. A locked room is a fine idea, if it is possible, otherwise housing the transmitter and power supplies in metal cabinets is an excellent, although expensive solution. Lacking a metal cabinet, a wood cabinet or a wooden framework covered with wire screen is the next-best solution. Many stations have the power supplies housed in metal cabinets in the operating room or in a closet or basement, and this cabinet or entry is kept locked – with the key out of reach of everyone but the operator. The power leads are run through conduit to the transmitter, using ignition cable for the high-voltage leads. If the power supplies and transmitter are in the same cabinet, a lock-type main switch for the incoming line power is a good precaution.

A simple substitute for a lock-type main switch is an ordinary line plug with a short connecting wire between the two pins. By wiring a female receptacle in series with the main power line in the transmitter, the shorting plug will act as the main safety lock. When the plug is removed and hidden, it will be impossible to energize the transmitter, and a stranger or child isn't likely to spot or suspect the open receptacle.

An essential adjunct to any station is a shorting stick for discharging any high voltage to ground before any work is done in the transmitter. Even if interlocks and power-supply bleeders are used, the failure of one or more of these components may leave the transmitter in a dangerous condition. The shorting stick is made by mounting a small metal hook, of wire or rod, on one end of a dry stick or bakelite rod. A piece of ignition cable or other well-insulated wire is then run from the hook on the stick to the chassis or common ground of the transmitter, and the stick is hung alongside the transmitter. Whenever the power is turned off in the transmitter to permit work on the rig, the shorting stick is first used to touch the several high-voltage leads (plate rf choke, filter capacitor, tube plate connection) to insure that there is no high voltage at any of these points.

Fusing

A minor hazard in the amateur station is the possibility of fire through the failure of a component. If the failure is complete and the component is large, the house fuses will generally blow. However, it is unwise and inconvenient to depend upon the house fuses to protect the lines running to the radio equipment, and every power supply should have its primary circuit individually fused, at about 150 to 200 percent of the maximum rating of the supply. Circuit breakers can be used instead of fuses if desired.

Wiring

Control-circuit wires running between the operating position and a transmitter in another part of the room should be hidden, if possible. This can be done by running the wires under the floor or behind the base molding, bringing the wires out to terminal boxes or regular wall fixtures. Such construction, however, is generally only possible in elaborate installations, and the average amateur must content himself with trying to make the wires as inconspicuous as possible. If several pairs of leads must be run from the operating table to the transmitter, as is generally the case, a single piece of rubber- or vinyl-covered multiconductor cable will always look neater than several pieces of rubber-covered lamp cord, and it is much easier to sweep around or dust.

Solid or standard wire connected to a screw terminal (ac plug, antenna binding posts) should either be "hooked" around a *clockwise* direction, or, better yet, be terminated in a soldering lug. If the wire is hooked in a counter-clockwise position, it will tend to move out from under the screw head as the screw is tightened.

The antenna wires always present a problem, unless coaxial-line feed is used. Open-wire line from the point of entry of the antenna line should always be arranged neatly, and it is generally best to support it at several points. Many operators

A world map can be placed under a large sheet of glass to provide a convenient position for reference. A skill, which has been developed by many amateurs, is the ability to write with one hand while operating the key with the other. Shown here is WA1NNC.

prefer to mount any antenna-tuning assemblies right at the point of entry of the feedline, together with an antenna changeover relay (if one is used), and then link from the tuning assembly to the transmitter can be made of inconspicuous coaxial line. If the transmitter is mounted near the point of entry of the line, it simplifies the problem of "What to do with the feeders?"

Lightning and Fire Protection

The National Electrical Code (NFPA No. 70) adopted by the National Fire Protection Association, although purely advisory as far as the NFPA is concerned, is of interest because it is widely used in law and for legal regulatory purposes. Article 810 deals with radio and television equipment, and Section C treats specifically amateur transmitting and receiving stations. Pertinent paragraphs are reprinted below:

810-11. Material. Antenna and lead-in conductors shall be of hard-drawn copper, bronze, aluminum alloy, copper-clad steel or other high-strength, corrosion-resistant material. Soft-drawn or medium-drawn copper may be used for lead-in conductors where the maximum span between points of support is less than 35 feet.

810-12. Supports. Outdoor antenna and lead-in conductors shall be securely supported. They shall not be attached to poles or similar structures carrying electric light or power wires or trolley wires of more than 250 volts between conductors. Insulators supporting the antenna conductors shall have sufficient mechanical strength to safely support the conductors. Lead-in conductors shall be securely attached to the antenna.

810-13. Avoidance of Contacts with Conductors of Other Systems. Outdoor antenna and lead-in conductors from an antenna to a building shall not cross over electric light or power circuits and shall be kept well away from all such circuits so as to avoid the possibility of accidental contact. Where proximity to electric light and power service conductors of less than 250 volts between conductors cannot be avoided, the installation shall be such as to provide a clearance of at least two feet. It is recommended that antenna conductors be so installed as not to cross under electric light or power conductors.

810-14. Splices. Splices and joints in antenna span shall be made with approved splicing devices or by such other means as will not appreciably weaken the conductors.

Soldering may ordinarily be expected to weaken the conductor. Therefore, the joint should be mechanically secure before soldering.

810-15. Grounding. Masts and metal structures supporting antennas shall be permanently and effectively grounded, without intervening splice or connection.

810-21. Grounding Material. The grounding conductor shall, unless otherwise specified, be of copper, aluminum, copper-clad steel, bronze, or other corrosion-resistant material.

810-22. Insulation. The grounding conductors may be uninsulated.

810-23. Supports. The grounding conductors shall be securily fastened in place and may be directly attached to the surface wired over without the use of insulating supports. Where proper support cannot be provided the size of the grounding conductor shall be increased proportionately.

810-24. Mechanical Protection. The grounding conductor shall be protected where exposed to physical damage or the size of the grounding conductor shall be increased proportionately to compensate for the lack of protection.

810-25. Run in Straight Line. The grounding conductor shall be run in as straight a line as practicable from the antenna mast and/or lightning arrestor to the grounding electrode.

810-26. Grounding Electrode. The grounding conductor shall be connected to a metallic underground water piping system. Where the building is not supplied with a (suitable) water system (one buried deeper than ten feet) the connection shall be made to the metal frame of the building when effectively grounded or to a grounding electrode. At a penthouse or similar location the ground conductor may be connected to a water pipe or rigid conduit.

810-27. Grounding Conductor. The grounding conductor may be run either inside or outside the building.

810-52. Size of Antenna. Antennas for amateur transmitting and receiving stations shall be of a size not less than given in Table 810-52.

Table 810-52

Size of Amateur-Station Outdoor Antenna Conductors

Material	Minimum Size of Conductors When Maximum Open Span Length Is Less than 150 feet	Over 150 feet
Hard-drawn copper	14	10
Copper-clad steel, bronze or other high-strength material	14	12

810-53. Size of Lead-In Conductors. Lead-in conductors for transmitting stations shall, for various maximum span lengths, be of a size at least as great as that of conductors for antenna specified in 810-52.

810-54. Clearance on Building. Antenna conductors for transmitting stations, attached to buildings, shall be firmly mounted at least 3 inches clear of the surface of the building on nonabsorptive insulating supports, such as treated pins or brackets, equipped with insulators having not less than 3-inch creepage and airgap distances. Lead-in conductors attached to buildings shall also conform to these requirements, except when they are enclosed in a continuous metal shield which is permanently and effectively grounded. In this latter case the metallic shield may also be used as a conductor.

810-55. Entrance to Building. Except where protected with a continuous metal shield which is permanently and effectively grounded, lead-in conductors for transmitting stations shall enter building by one of the following methods:

(a) Through a rigid, noncombustible, nonabsorptive insulating tube or bushing.

(b) Through an opening provided for the purpose in which the entrance conductors are firmly secured so as to provide a clearance of at least 2 inches.

(c) Through a drilled window pane.

810-56. Protection Against Accidental Contact. Lead-in conductors to radio transmitters shall be so located or installed as to make accidental contact with them difficult.

810-57. Lightning Arrestors – Transmitting Stations. Each conductor of a lead-in for outdoor antenna shall be provided with a lightning arrestor or other suitable means which will drain static charges from the antenna system.

Exception No. 1. When protected by a continuous metallic shield which is permanetly and effectively grounded.

Exception No. 2. Where the antenna is permanently and effectively grounded.

810-59. Size of Protective Ground. The protective ground conductor for transmitting stations shall be as large as the lead-in, but not smaller than No. 10 copper, bronze or copper-clad steel.

810-60. Size of Operating Grounding Conductor. The operating grounding conductor for transmitting stations shall be not less than No. 14 copper or its equivalent.

810-70. Clearance from Other Conductors. All conductors inside the building shall be separated at least 4 inches from the conductors of other light or signal circuit unless separated therefrom by conduit or some firmly fixed non conductor such as porcelain tubes or flexible tubing.

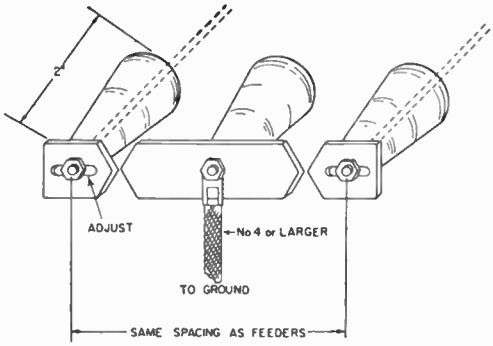

Fig. 23-1 – A simple lightning arrester made from three stand-off or feedthrough insulators and sections of a 1/8 X 1/2-inch brass or copper strap. It should be installed in the open-wire or Twin-Lead line at the point where it is nearest the ground outside the house. The heavy ground lead should be as short and direct as possible. Gap setting should be minimum for transmitter power.

810-71. General. Transmitters shall comply with the following:

(a) Enclosing. The transmitter shall be enclosed in a metal frame or grille, or separated from the operating space by a barrier or other equivalent means, all metallic parts of which are effectually connected to ground.

(b) Grounding of Controls. All external metallic handles and controls accessible to the operating personnel shall be effectually grounded.

No circuit in excess of 150 volts between conductors should have any parts exposed to direct contact. A complete dead-front type of switchboard is preferred.

(c) Interlocks on Doors. All access doors shall be provided with interlocks which will disconnect all voltages in excess of 350 volts between conductors when any access door is opened.

(d) Audio Amplifiers. Audio amplifiers which are located outside the transmitter housing shall be suitably housed and shall be so located as to be readily accessible and adequately ventilated.

This station, owned by the Talcott Mountain UHF Society, WA1IOX, is designed expressly for moonbounce and advanced amateur satellite work. The operator (WA1JLD) is able to control simultaneously the several receivers, "steer" the antennas, and still have access to the peripheral equipment for data recording and measurement.

The basic equipment is located on a table with home-made wooden shelves. Accessory equipment is located at either side on stands or in racks. This arrangement provides room for operation of the station by more than one operator at the same time – an important consideration for an advanced club station such a WA1IOX.

If coaxial line is used and an antenna has a dc return throughout (gamma match), compliance with 810-57 above is readily achieved by grounding the shield of the coax at the point where it is nearest to the ground outside the house. Use a heavy wire – the aluminum wire sold for grounding TV antennas is good. If the cable can be run underground, one or more grounding stakes should be located at the point where the cable enters the ground, at the antenna end. A grounding stake, to be effective in soils of average conductivity, should be not less than 8 feet long. Galvanized 3/4-inch iron pipe is acceptable, as is 5/8-inch steel rod or 1/2-inch nonferrous rod. Making connection to the outside of the outer conductor of the coaxial line will normally have no effect on the SWR in the line, and consequently it can be done at any point or points. A commercial model of a lightning arrester for coaxial line is available.

In some areas the probability of lightning surges entering the home via the 117/230-volt line may be high. A portion of the lightning surges originating on an overhead primary feeder can pass through the distribution transformer by electrostatic and electromagnetic coupling to the secondary circuit, even though the primary is protected by distribution-class lightning arresters. Radio equipment can be protected from these surges by the use of a "secondary service lightning arrester." A typical unit is the G.E. Model 9L15CCB007, marketed as the Home Lightning Protector. It is mounted at the weatherhead or in the service entrance box.

Rotary beams using a T or gamma match and with each element connected to the boom will usually be grounded through the supporting metal tower. If the antenna is mounted on a wooden pole or on the top of the house, a No. 4 or larger wire should be connected from the beam to the ground by the shortest and most direct route possible, using insulators where the wire comes close to the building. From a lightning-protection standpoint, it is desirable to run the coaxial and control lines from a beam down a metal tower and underground to the shack. If the tower is well grounded and the antenna is higher than any surrounding objects, the combination will serve well as a lightning rod.

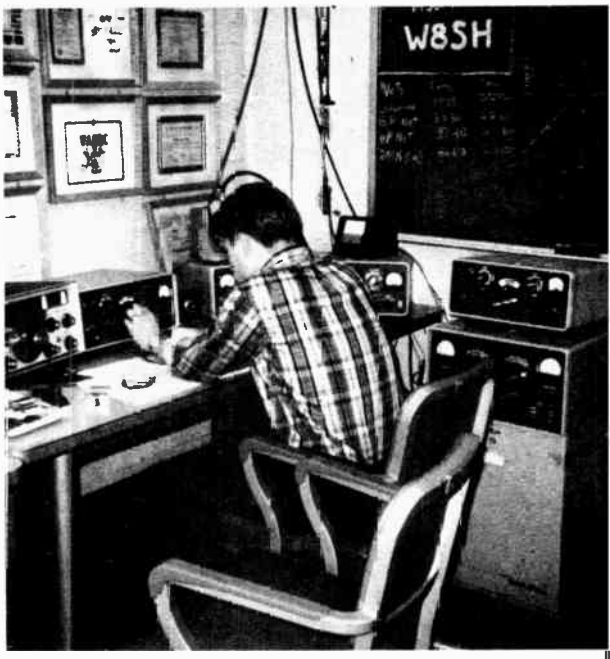

A blackboard mounted near the operating position allows members of this club station, W8SH, to list operating information for the benefit of other club members.

The sole purpose of lightning rods or grounded roofs is to protect a building in case a lightning strike occurs; there is no accepted evidence that any form of protection can prevent a stroke.*

Experiments have indicated that a high vertical conductor will generally divert to itself direct hits that might otherwise fall within a cone-shaped space of which the apex is the top of the conductor and the base a circle of radius approximately two times the height of the conductor. Thus a radio mast may afford some protection to low adjacent structures, but only when low-impedance grounds are provided.

*See "Code for Protection Against Lightning," *National Bureau of Standards Handbook 46*, for sale by the Superintendent of Documents, Washington DC 20402.

Chapter 24

Operating a Station

The enjoyment of amateur radio comes mostly from the operation of our station once we have finished its construction. Upon the *station* and its *operation* depend the communication records that are made. The standing of individuals as amateurs and respect for the capabilities of the whole institution of amateur radio depend to a considerable extent on the practical communications established by amateurs, the aggregate of all our station efforts.

An operator with a slow, steady, clean-cut method of sending has a big advantage over the poor operator. The technique of speaking in connected thoughts and phrases is equally important for the voice operator. Good sending is partly a matter of practice, but patience and judgment are just as important qualities of an operator as a good "fist."

Operating knowledge embracing standard procedures, development of skill in employing cw to expand the station range and operating effectiveness at minimum power levels and some net know-how are all essentials in achieving a triumphant amateur experience with top station records, personal results, and demonstrations of what our stations can do in practical communications.

OPERATING COURTESY AND TOLERANCE

Operating interests in amateur radio vary considerably. Public service is of course the most important activity (more about this later). Other interests include rag-chewing, working DX, contest operating, award-seeking, or experimenting on the air. Inevitably, amateurs in pursuit of their own favorite activity often get into each other's hair.

Interference is one of the things we amateurs have to live with. However, we can conduct our operating in a way designed to alleviate this as much as possible. *Before putting the transmitter on the air, listen on your own frequency.* If you hear stations engaged in communication on that frequency, stand by until you are sure no interference will be caused by your operations, or *shift to another frequency.* No amateur or any group of amateurs has any *exclusive* claim to any frequency in any band, but we must work together, each respecting the rights of others. Remember, those other chaps can cause you as much interference as you cause them, sometimes more!

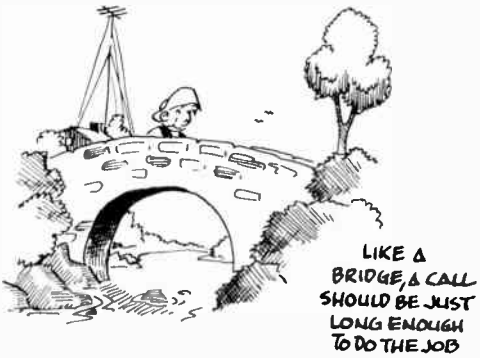

In this chapter we'll recount some fundamentals of operating success, cover major procedures for successful general work and include proper forms to use in message handling and other fields. Note also the sections on special activities, awards and organization. These permit us all to develop through our organization more success together than we could ever attain by separate uncoordinated efforts.

CW PROCEDURE

The best cw operator observes certain operating procedures regarded as "standard practice," as follows:

1) *Calls.* A short, snappy call is usually the most effective. Standard practice for years has been the "three by three," that is the station being called three times followed by the called station three times, thus: WØDX WØDX WØDX DE W1AW W1AW W1AW $\overline{AR}$ But much depends on the circumstances. In a contest, a "one by one" may be more effective. The general principle is to *keep it short*, so as not to clutter up the air with unnecessary QRM.

CQ. One hears many stations calling CQ over and over without signing. Three CQs followed by one or two identifications repeated not more than three times should be sufficient under any circumstances. Use a general CQ *only* when you are willing to work any station who answers you. Listen on the frequency first; don't plop on a QSO in progress.

The directional CQ: The best way to find some specific state, country or place is to *listen* and *call* when what you are looking for is heard. Directional or selective CQs usually just cause unnecessary interference. However, occasionally they work, and it is preferable to call a selective CQ than to call a general one and not answer if the station replying is not what you want. *Example*: A station looking for Vermont might call: CQ VT CQ VT CQ VT DE W4IA W4IA W4IA K. Keep such calls short. Repeat frequently if no results. And remember, always *listen first* to avoid causing QRM.

OPERATING ABBREVIATIONS AND PREFIXES

Q SIGNALS

Given below are a number of Q signals whose meanings most often need to be expressed with brevity and clearness in amateur work. (Q abbreviations take the form of questions only when each is sent followed by a question mark.)

QRG Will you tell me my exact frequency (or that of . . .)? Your exact frequency (or that of . . .) is . . . kHz.

QRH Does my frequency vary? Your frequency varies.

QRI How is the tone of my transmission? The tone of your transmission is . . . (1. Good; 2. Variable; 3. Bad).

QRK What is the intelligibility of my signals (or those of . . .)? The intelligibility of your signals (or those of . . .) is . . . (1. bad; 2. poor; 3. fair; 4. good; 5. excellent.

QRL Are you busy? I am busy (or I am busy with . . .). Please do not interfere.

QRM Is my transmission being interfered with? Your transmission is being interfered with . . . (1. nil; 2. slightly; 3. moderately; 4. severely; 5. extremely.

QRN Are you troubled by static? I am troubled by static . . . (1-5 as under QRM).

QRO Shall I increase power? Increase power.

QRP Shall I decrease power? Decrease power.

QRQ Shall I send faster? Send faster (. . . wpm).

QRS Shall I send more slowly? Send more slowly (. . . wpm).

QRT Shall I stop sending? Stop sending.

QRU Have you anything for me? I have nothing for you.

QRV Are you ready? I am ready.

QRW Shall I inform . . . that you are calling him on . . . kHz? Please inform . . . that I am calling on . . . kHz.

QRX When will you call me again? I will call you again at . . . hours (on . . . kHz).

QRY What is my turn? Your turn is number . . .

QRZ Who is calling me? You are being called by . . . (on . . . kHz).

QSA What is the strength of my signals (or those of . . .)? The strength of your signals (or those of . . .) is . . . (1. Scarcely perceptible; 2. Weak; 3. Fairly good; 4. Good; 5. Very good).

QSB Are my signals fading? Your signals are fading.

QSD Are my signals mutilated? Your signals are mutilated.

QSG Shall I send . . . messages at a time? Send . . . messages at a time.

QSK Can you hear me between your signals and if so can I break in on your transmission? I can hear you between my signals; break in on my transmission.

QSL Can you acknowledge receipt? I am acknowledging receipt.

QSM Shall I repeat the last message which I sent you, or some previous message? Repeat the last message which you sent me [or message(s) number(s) . . .].

QSN Did you hear me (*or* . . .) on . . . kHz? I did hear you (*or* . . .) on . . . kHz.

QSO Can you communicate with . . . direct or by relay? I can communicate with . . . direct (or by relay through . . .).

QSP Will you relay to . . . ? I will relay to . . .

QSU Shall I send or reply on this frequency (*or* on . . . kHz)? Send or reply on this frequency (*or* on . . . kHz).

QSV Shall I send a series of Vs on this frequency (or . . . kHz)? Send a series of Vs on this frequency (or . . . kHz).

QSW Will you send on this frequency (or on . . . kHz)? I am going to send on this frequency (or on . . . kHz).

QSX Will you listen to . . . on . . . kHz? I am listening to . . . on . . . kHz.

QSY Shall I change to transmission on another frequency? Change to transmission on another frequency (or on . . . kHz).

QSZ Shall I send each word or group more than once? Send each word or group twice (or . . . times).

QTA Shall I cancel message number . . . ? Cancel message number . . .

QTB Do you agree with my counting of words? I do not agree with your counting of words; I will repeat the first letter or digit of each word or group.

QTC How many messages have you to send? I have . . . messages for you (or for . . .).

QTH What is your location? My location is . . .

QTR What is the correct time? The time is . . .

Special abbreviations adopted by ARRL:

QST General call preceding a message addressed to all amateurs and ARRL members. This is in effect "CQ ARRL."

The R-S-T System

READABILITY

1 — Unreadable.
2 — Barely readable, some words distinguishable.
3 — Readable with considerable difficulty.
4 — Readable with practically no difficulty.
5 — Perfectly readable.

SIGNAL STRENGTH

1 — Faint signals, barely perceptible.
2 — Very weak signals.
3 — Weak signals.
4 — Fair signals.
5 — Fairly good signals.
6 — Good signals.
7 — Moderately strong signals.
8 — Strong signals.
9 — Extremely strong signals.

TONE

1 — Extremely rough hissing note.
2 — Very rough a.c. note, no trace of musicality.
3 — Rough low-pitched a.c. note, slightly musical.
4 — Rather rough a.c. note, moderately musical.
5 — Musically-modulated note.
6 — Modulated note, slight trace of whistle.
7 — Near d.c. note, smooth ripple.
8 — Good d.c. note, just a trace of ripple.
9 — Purest d.c. note.

If the signal has the characteristic stability of crystal control, add the letter X to the RST report. If there is a chirp, the letter C may be added to so indicate. Similarly for a click, add K.

This reporting system is used on both c.w. and voice, leaving out the "tone" report on voice.

Hams who do not raise stations readily may find that their sending is poor, their calls ill timed or their judgment in error. When conditions are right to bring in signals from the desired locality, you can call them. Short calls, at about the same frequency, with breaks to listen, will raise stations with minimum time and trouble.

2) *Answering a Call*: Call three times (or less); send DE; sign three times (or less); after contact is established decrease the use of the call signals of both stations to *once only*. When a station receives a call but does not receive the call letters of the station calling, QRZ? may be used. It means "By whom as I being called?" QRZ should not be used in place of CQ.

3) *Ending Signals and Sign-Off*: The proper use of $\overline{AR}$, K, $\overline{KN}$, $\overline{SK}$, and CL ending signals is as follows: $\overline{AR}$ – End of transmission. Recommended after call to a specific station before contact has been established.

Example: W6ABC W6ABC W6ABC DE W9LMN W9LMN $\overline{AR}$. Also at the end of transmission of a radiogram, immediately following the signature, preceding identification.

K – Go ahead (any station). Recommended after CQ and at end of each transmission during QSO when there is no objection to others breaking in.

Example: CQ CQ CQ DE W1ABC W1ABC K or W9XYZ DE W1ABC K.

$\overline{KN}$ – Go ahead (specific station), all others keep out. Recommended at the end of each transmission during a QSO, or after a call, when calls from other stations are not desired and will not be answered.

Example: W4FGH DE EL4A $\overline{KN}$.

$\overline{SK}$ – End of QSO or communication. Recommended before signing *last* transmission at end of a QSO.

Example: . . . $\overline{SK}$ W8LMN DE W5BCD.

CL – I am closing station. Recommended when a station is going off the air, to indicate that it will not listen for any further calls.

Example: . . . $\overline{SK}$ W7HIJ DE W2JKL CL.

4) *Testing*: When it is necessary to make test signals on the air they should continue for not more than ten seconds and must be identified by your call letters. Avoid excessive testing, but *always* listen before using any frequency for this purpose. Use a dummy load if possible.

5) *Receipting* for conversation or traffic: Never receipt for a transmission until it has been entirely received. "R" means *only* "transmission received as sent." Use R only when *all* is received correctly.

6) *Repeats*: When part of a transmission is lost, a call should be followed by correct abbreviations to ask for repeats. When a few words on the end of a transmission are lost, the *last word received correctly* is given after ?AA, meaning "all after." When a few words at the beginning of a transmission are lost, ?AB for "all before" a stated word should be used. The quickest way to ask for a fill in the middle of a transmission is to send the last word received correctly, a question mark, then the next word received correctly. Or send "?BN [word] and [word]."

Do not send words twice (QSZ) unless it is requested. Send single. Do not fall into the bad habit of sending double *without a request* from fellows you work. Don't say "QRM" or "QRN" when you mean "QRS."

General Practices

Here are a few recommended general practices to make your cw operating more proficient:

1) Use the "double dash" or "break" sign ($\overline{BT}$) to separate thoughts or sentences in a rag chew, instead of punctuation.

2) Make full use of cw abbreviations to shorten transmissions. (See list on p. 657). *Avoid* such inanities as "over to you" and "how copy?" on cw. They are unnecessarily long and HW? says the same thing.

3) Use the letter R in place of a decimal or a colon in time designations. (E.g., 3R5, MHz, 2R30 PM.)

4) "Break in" is helpful in all cw operation. Being able to hear the other station between the spaces in your sending enables him to "break" you if he is not receiving you, thus preventing "blind" transmission. It also enables you to hear a called station if he comes back to someone else, preventing unnecessary calling.

5) "Swing" in sending is *not* the mark of a good operator. Send evenly, *watch your spacing*. It is very easy to get into the habit of running your words together. Correct your errors; the other guy is no mind reader.

6) A long dash can be used for a zero in casual ragchewing, but avoid it in call letters and formal messages.

7) It is good practice to repeat unusual words and things you want to make sure the other operator receives. A question mark after a word means that you intend repeating it.

8) Be sure you identify as required by FCC regs.

Good Sending

Assuming that an operator has learned sending properly, and comes up with a precision "fist" – not fast, but clean, steady, making well-formed rhythmical characters and spacing beautiful to listen to – he then becomes subject to outside pressures to his own possible detriment in everyday operating. He will want to "speed it up" because the operator at the other end is going faster, and so he begins, unconsiously, to run his words together or develops a "swing."

Perhaps one of the easiest ways to get into bad habits is to do too much playing around with special keys. Too many operators spend only enough time with a straight key to acquire "passable" sending, then subject their newly-developed "fists" to the entirely different movements of bugs, side-swipers, electronic keys, or

what-have-you. All too often, this results in the ruination of what might have become a very good "fist."

Think about your sending a little. Are you satisfied with it? You should not be – ever. Nobody's sending is perfect, and therefore *every* operator should continually strive for improvement. Do you ever run letters together – like Q for MA, or P for AN – especially when you are in a hurry? Practically everybody does at one time or another. Do you have a "swing"? Any recognizable "swing" is a deviation from perfection. Strive to send like tape sending; copy a W1AW Bulletin and try to send it with the same spacing using a local oscillator on a subsequent transmission.

Check your spacing in characters, between characters and between words occasionally. A visual recording of your fist will show up your faults as nothing else will. Practice the correction of faults.

Using Break-In

The technical requirements for cw break-in are detailed elsewhere in this *Handbook* (see Chapter 11). Once this part of it is accomplished, the full advantages of break-in operation can be realized. Unnecessarily long calls are avoided, QRM is reduced, more communication per hour can be realized. Brief calls with frequent short pauses for reply can approach (but not equal) break-in efficiency.

With break-in, ideas and messages to be transmitted can often be pulled right through the holes in the QRM and QRN. "Fills" are unnecessary. Neither operator need send for any period of time without being copied. Once you get used to it, break-in is a "must."

In traffic-handling circles, the station without break-in is considered at best an indifferent traffic-handling station. But even in day-to-day QSOing, break-in can be a great advantage.

In calling, the transmitting operator sends the letters "BK" at intervals during his call so that stations hearing the call may know that break-in is in use and take advantage of the fact. *He pauses at intervals* during his call, to listen for a moment for a reply. If the station being called does not answer, the call can be continued.

With a tap of the key, the man on the receiving end can interrupt (if a word is missed). The other operator is constantly monitoring, awaiting just such directions. It is not necessary that *you* have perfect facilities to take advantage of break-in when the stations you work are break-in-equipped. After an invitation to *break* is given (and at each pause) press your key – and contact can start *immediately*.

VOICE OPERATING

The use of proper procedure to get best results is just as important as in using code. In telegraphy words must be spelled out letter by letter. It is therefore but natural that abbreviations and shortcuts have come into use. In voice work, however, abbreviations are not necessary, and have less importance in our operating procedure.

Voice-Operating Hints

1) Listen before calling.

2) Make short calls with breaks to listen. Avoid long CQs; do not answer over-long CQs.

3) Use push-to-talk or voice control. Give essential data concisely in first transmission.

4) Make reports honest. Use definitions of strength and readability for reference. Make your reports informative and useful. Honest reports and *full* word description of signals save amateur operators from FCC trouble.

5) Limit transmission length. Two minutes or less will convey much information. When three or more stations converse in round tables, brevity is essential.

6) Display sportsmanship and courtesy. Bands are congested . . . make transmissions meaningful . . . give others a break.

7) Check transmitter adjustment . . . avoid a-m overmodulation and splatter. On ssb check carrier balance carefully. Do not radiate when moving VFO frequency or checking nfm swing. Use receiver BFO to check stability of signal. Complete testing before busy hours!

The letter "K" is used in telegraphic practice so that the operator will not have to pound out the separate letters. The voice operator can *say* the words "go" or "over."

One laughs on cw by sending HI. On phone, *laugh* when one is called for.

The matter of reporting *readability* and *strength* is as important to phone operators as to those using code. With telegraph nomenclature, it is necessary to spell out words to describe signals or use abbreviated signal reports. But on voice, we have the ability to "say it with words." "Readability four, strength eight" is the best way to give a quantitative report, but reporting can be done so much more meaningfully with ordinary words: "You are weak but I can understand you, so go ahead," or "Your signal is strong but you are buried under local interference."

Voice Equivalents to Code Procedure

Voice	*Code*	*Meaning*
Over	$\overline{\text{AR}}$	After call to specific station
End of message	$\overline{\text{AR}}$	End of transmission or record message
Wait; stand by	$\overline{\text{AS}}$	Self-explanatory
Received	R	*All* received correctly
Go	K	Any station transmit
Go only	$\overline{\text{KN}}$	Addressed station only transmit
Clear	$\overline{\text{SK}}$	End of contact or communication
Closing station	CL	Going off the air

Phone-Operating Practice

Efficient voice communication, like good cw communication, demands good operating. Adherence to certain points "on getting results" will go a long way toward improving our phone-band operating conditions.

Use push-to-talk technique. Where possible arrange on-off switches, controls or voice-con-

trolled break-in for fast back-and-forth exchanges. This will help reduce the length of transmissions and keep brother amateurs from calling you a "monologuist" – a guy who likes to hear himself talk!

Listen with care. Keep noise and "backgrounds" out of your operating room to facilitate good listening. It is natural to answer the strongest signal, but take time to listen and give some consideration to the *best* signals, regardless of strength. Every amateur cannot run a kilowatt transmitter, but there is no reason why every amateur cannot have a signal of good quality, and utilize uniform operating practices to aid in the understandability and ease of his own communications.

Interpose your call regularly and at frequent intervals. Three short calls are better than one long one. In calling CQ, one's call should certainly appear at least once for every five or six CQs. Calls with frequent breaks to listen will save time and be most productive of results. In identifying, always transmit your *own* call *last. Don't* say "This is W1ABC standing by for W2DEF"; say "W2DEF, this is W1ABC, over." FCC regulations show the call of the transmitting station sent *last.*

Monitor your own frequency. This helps in timing calls and transmissions. Transmit only when the frequency is clear and there is a chance of being copied successfully – not when you are merely "more QRM." Timing transmissions is an art to cultivate.

Keep modulation constant. By turning the gain "wide open" you are subjecting anyone listening to the diversion of whatever noises are present in or near your operating room, to say nothing of the possibility of feedback, echo due to poor acoustics, and modulation excesses due to sudden loud noises. Speak near the microphone, and don't let your gaze wander all over the station causing sharply-varying input to your speech amplifier; at the same time, keep far enough from the microphone so your signal is not modulated by your breathing. Change distance to the microphone or gain only as necessary to insure uniform transmitter performance without splatter or distortion.

Make connected thoughts and phrases. Don't mix disconnected ideas or subjects. Ask questions consistently. Pause for a moment and then get the answers.

Have a pad of paper handy. It is convenient and desirable to jot down questions as they come, in order not to miss any. It will help you to make intelligent to-the-point replies.

Steer clear of inanities and soap-opera stuff. Our amateur radio and personal reputation as serious communications workers depend on us.

Avoid repetition. Don't repeat back what the other fellow has just said. Too often we hear: "Okay on your new antenna there, okay on receiving me okay, okay on the trouble you're having with your receiver, okay on the company who just came in with some ice cream and cake, okay . . . [etc.]." Just *say* you received everything O.K. Don't try to prove it.

Use phonetics only as required. When clarifying genuinely doubtful expressions and in getting your call identified positively we suggest use of the International Civil Aviation Organization list. However, don't overdo its use.

The speed of radiotelephone transmission (with perfect accuracy) depends almost entirely upon the skill of the two operators involved. One must learn to speak at a rate allowing perfect understanding as well as permitting the receiving operator to copy down the message text, if that is necessary. Because of the similarity of many English speech sounds, the use of word lists has been found necessary. All voice-operated stations should use a *standard* list as needed to identify call signals or unfamiliar expressions.

A – ALFA	N – NOVEMBER
B – BRAVO	O – OSCAR
C – CHARLIE	P – PAPA
D – DELTA	Q – QUEBEC
E – ECHO	R – ROMEO
F – FOXTROT	S – SIERRA
G – GOLF	T – TANGO
H – HOTEL	U – UNIFORM
I – INDIA	V – VICTOR
J – JULIETT	W – WHISKEY
K – KILO	X – X-RAY
L – LIMA	Y – YANKEE
M – MIKE	Z – ZULU

Example: W1AW . . . W 1 ALFA WHISKEY . . . W1AW

Round Tables. The round table has many advantages if run properly. It clears frequencies of interference, especially if all stations involved are on the same frequency, while the enjoyment value remains the same, if not greater. By use of push-to-talk, the conversation can be kept lively and interesting, giving each station operator ample opportunity to participate without waiting overlong for his turn.

Round tables can become very unpopular if they are not conducted properly. The monologuist, off on a long spiel about nothing in particular, cannot be interrupted; *make your transmissions short and to the point.* "Butting in" is discourteous and unsportsmanlike; *don't enter a round table, or any contact between two other amateurs, unless you are invited.* It is bad enough trying to copy through prevailing interference without the added difficulty of poor voice quality; *check your transmitter adjustments frequently.* In general, follow the precepts as hereinbefore outlined for the most enjoyment in round tables as well as any other form of radiotelephone communication.

WORKING DX

Most amateurs at one time or another make "working DX" a major aim. As in every other phase of amateur work, there are right and wrong ways to go about getting best results in working foreign stations, and it is the intention of this section to outline a few of them.

The ham who has trouble raising DX stations readily may find that poor transmitter efficiency is

not the reason. He may find that his sending is poor, or his calls ill-timed, or his judgment in error. When conditions are right to bring in the DX, and the receiver sensitive enough to bring in several stations from the desired locality, the way for U.S. and Canadian stations to work DX is to use the appropriate frequency and timing and *call these stations*, as against the common practice of calling "CQ DX."

The call CQ DX means slightly different things to amateurs in different bands:

a) On vhf, CQ DX is a general call ordinarily used only when the band is open, under favorable "skip" conditions. For vhf work, such a call is used for looking for new states and countries, also for distances beyond the customary "line-of-sight" range on most vhf bands.

b) CQ DX on our 7-, 21- and 28-MHz bands may be taken to mean "General call to any foreign station." The term "foreign station" usually refers to any station in a foreign continent. (*Experienced* amateurs in the U.S.A. and Canada do *not* use this call, but *answer* such calls made by foreign stations.)

c) CQ DX used on 3.5 MHz under winter-night conditions may be used in this same manner. At other times, under average 3.5 MHz propagation conditions, the call may be used in domestic work when looking for new states or countries in one's own continent, usually applying to stations located over 1000 miles distant from you.

The way to work DX is not to use a CQ call at *all* (in our continent). Instead, use your best tuning skill – and listen – and listen – and *listen. You have to hear them before you can work them.* Hear the desired stations first; time your calls well. Use your utmost skill. A sensitive receiver is often more important than the power input in working foreign stations. If you can hear stations in a particular country or area, chances are that you will be able to work someone there.

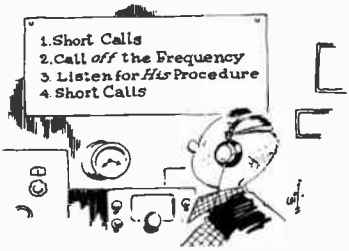

One of the most effective ways to work DX is to know the operating habits of the DX stations sought. Doing too much transmitting on the DX bands is not the way to do this. Again, *listening* is effective. Once you know the operating habits of the DX station you are after you will know when and were to call, and when to remain silent waiting your chance.

Some DX stations indicate where they will tune for replies by use of "10U" or "15D." (See point 4 of the DX Operating Code.) In voice work the overseas operator may say "listening on 14,225 kHz," or "tuning upward from 28,500 kHz." Many a DX station will not reply to a call on his exact frequency.

ARRL has recommended some operating procedures to DX stations aimed at controlling some of the thoughtless operating practices sometimes used by W/VE amateurs. A copy of these recommendations (Operating Aid No. 5) can be obtained free of charge from ARRL Headquarters.

In any band, particularly at line-of-sight frequencies, when directional antennas are used, the directional CQ such as CQ W5, CQ north, etc., is the preferable type of call. Mature amateurs agree that CQ DX is a wishful rather than a practical type of call for most stations in the North Americas looking for foreign contacts. Ordinarily, it is a cause of unnecessary QRM.

Conditions in the transmission medium often make it possible for the signals from low-powered transmitters to be received at great distances. In

DX OPERATING CODE

(For W/VE Amateurs)

Some amateurs interested in DX work have caused considerable confusion and QRM in their efforts to work DX stations. The points below, if observed by all W/VE amateurs, will go a long way toward making DX more enjoyable for everybody.

1. Call DX only after he calls CQ, QRZ?, signs $\overline{SK}$, or phone equivalent thereof.

2. Do *not* call a DX station:

a. On the frequency of the station he is working until you are *sure* the QSO is over. This is indicated by the ending signal $\overline{SK}$ on cw and any indication that the operator is listening, on phone.

b. Because you hear someone else calling him.

c. When he signs $\overline{KN}$, $\overline{AR}$, CL, or phone equivalents.

d. Exactly on his frequency.

e. After he calls a directional CQ, unless of course you are in the right direction or area.

3. Keep within frequency-band limits. Some DX stations operate outside. Perhaps they can get away with it, but you cannot.

4. Observe calling instructions of DX stations. "10U" means call ten kHz *up* from his frequency, "15D" means 15 kHz *down*, etc.

5. Give honest reports. Many foreign stations *depend* on W and VE reports for adjustment of station and equipment.

6. Keep your signal clean. Key clicks, chirps, hum or splatter give you a bad reputation and may get you a citation from FCC.

7. *Listen* for and *call* the station you want. Calling CQ DX is not the best assurance that the *rare* DX will reply.

8. When there are several W or VE stations waiting to work a DX station, avoid asking him to "listen for a friend." Let your friend take his chances with the rest. Also avoid engaging DX stations in rag-chews against their wishes.

DATE TIME (GMT)	STATION CALLED	CALLED BY	MY FREQ. OR DIAL	HIS SIGNAL RST	MY SIGNAL RST	FREQ. MHZ	EMISSION TYPE	POWER INPUT WATTS	TIME OF ENDING QSO	OTHER DATA	NAME	QSLs S	QSLs R
16 MAR.													
2300	W3EML	"	3.65	589	579	3.5	A1	250	2309	RCD 5	BILL	-	
2315	CQ	"				7	"	"					
16	"	W5NW	7.03	469	479	"	"	"	2330	CNDX POOR	SOUPY	✓	
35	W2ZVW	"	3.84	59	59	3.8	A3A	150	2355	SKED			
17 MAR.													
0005	UA9OH	"	14.02	579	589	14	A1	250	0012	NOVOSIBIRSK	VLADIS	✓	
0013	"	UW9PT	"	579	579	"	"	"	0020	"	VIK	✓	
1200	CQ	"	"			"	"	"					
02	"	VK3NR	14.01	599	599	"	"	"	1217	MELBOURNE	NOEL	✓	

KEEP AN ACCURATE AND COMPLETE STATION LOG AT ALL TIMES. FCC REQUIRES IT.

A page from the official ARRL log is shown above, answering every FCC requirement in respect to station records. Bound logs made up in accord with the above form can be obtained from Headquarters for a nominal sum or you can prepare your own, in which case we offer this form as a suggestion. The ARRL log has a special wire binding and lies perfectly flat on the table.

general, the higher the frequency band the less important power considerations become, for occasional DX work. This accounts in part for the relative popularity of the 14-, 21- and 28-MHz bands among amateurs who like to work DX.

QSL CARDS AND BUREAUS

Most amateurs who work another station for the first time, especially a foreign station, will later send the station a postcard confirming the contact. These cards are known as QSLs, taken from the international signal meaning, "I acknowledge receipt." A number of printing firms specialize in producing these postcards, following standard designs, or following the directions of an individual amateur. Advertisements of these printers appear each month in *QST*, ARRL's official journal.

Since it is rather expensive, for a foreign station especially, to send a QSL separately to each U.S. or Canadian station he's worked, ARRL has set up a system of QSL Bureaus, manned by amateur volunteers in each call area. The bureaus get packages of cards from overseas, which are sorted by call. Individual amateurs may claim their cards by sending a supply of stamped, self-addressed envelopes to the QSL manager in their call area. *QST* carries the addresses of these bureaus nearly every issue. Or write to ARRL Hq. for information.

Similarly, U.S. and Canadian amateurs may send QSLs in bulk to bureaus overseas rather than direct. Addresses for overseas bureaus appear in the IARU News department of *QST* each June and December.

KEEPING AN AMATEUR STATION LOG

The FCC requires every amateur to keep a complete station operating record (log) that shows (1) the date and time of each transmission, (2) all calls and transmissions made, whether contacts resulted or not, (3) the input power to the last stage of the transmitter, (4) the frequency band used, (5) the time of ending each contact (QSO), and (6) the signature of the licensed operator. Written messages handled in standard form must be included in the log or kept on file for a period of at least one year.

But a log can be more than just a legal record of station operation. It can be a "diary" of your amateur experience. Make it a habit to enter thoughts and comments, changes in equipment, operating experiences and reactions, anything that might make enjoyable reminiscences in years to come. Your log is a reflection of your personal experience in amateur radio. Make it both neat and complete.

ARRL headquarters stocks log books and message blanks for the convenience of amateurs.

PUBLIC SERVICE OPERATING

Amateurs interested in rendering public service in operating under ARRL sponsorship have formed the Amateur Radio Public Service Corps (ARPSC). This organization has two principal divisions. One is the Amateur Radio Emergency Corps (AREC), an emergency-preparedness group of approximately 30,000 amateur operators signed up voluntarily to keep amateur radio in the forefront along preparedness lines. The other is the National Traffic System (NTS), a message-handling facility which operates daily (including weekends and holidays) for systematic handling of third-party traffic.

Also recognized by ARRL as a part of the organized amateur radio public service effort are the Radio Amateur Civil Emergency Service (RACES), a part of the amateur service serving civil defense under a separate sub-part of the amateur regulations; the Military Affiliate Radio Service, sponsored by the armed services to provide military training for amateurs; and numerous amateur groups organized into nets by individuals,

clubs or other amateur entitites for public service and registered with the League. The detailed workings of ARPSC and RACES are covered briefly herein and explained in somewhat more detail in *Public Service Communications* and *Operating an Amateur Radio Station*, available to interested amateurs without charge.

MESSAGE HANDLING

Amateur operators in the United States and a few other countries enjoy a privilege not available to amateurs in most countries – that of handling third-party message traffic. In the early history of amateur radio in this country, some amateurs who were among the first to take advantage of this privilege formed an extensive relay organization which became the ARRL.

Thus, amateur message-handling has had a long and honorable history, and like most services, has gone through many periods of development and change. Those amateurs who handled traffic in 1914 would hardly recognize it the way some of us do it today, just as equipment in those days was far different from that in use now. Progress has been made and new methods have been developed in step with advancement in communication techniques of all kinds. Amateurs who handled a lot of traffic found that organized operating schedules were more effective than random relays, and as techniques advanced and messages increased in number, trunk lines were organized, spot frequencies began to be used, and there came into existence a number of traffic nets in which many stations operated on the same frequency to effect wider coverage in less time with fewer relays; but the old methods are still available to the amateur who handles only an occasional message.

Although message handling is as old an art as is amateur radio itself, there are many amateurs who do not know how to handle a message and have never done so. As each amateur grows older and gains experience in the amateur service, there is bound to come a time when he will be called upon to handle a written message, during a communications emergency, in casual contact with one of his many acquaintances on the air, or as a result of a request from a non-amateur field. Regardless of the occasion, if it comes to you, you will want to rise to it! Considerable embarrassment is likely to be experienced by the amateur who finds he not only does not know the form in which the message should be prepared, but does not know how to go about putting it on the air.

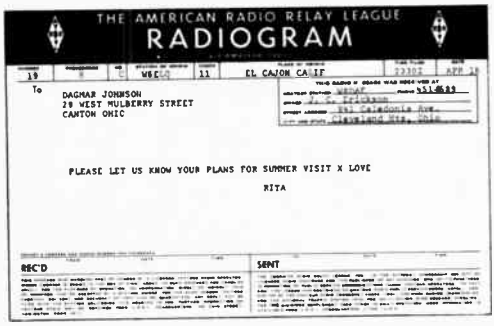
THE AMERICAN RADIO RELAY LEAGUE
RADIOGRAM

19 WSEUD 11 EL CAJON CALIF 23302 APR 16

To
DAGMAR JOHNSON
29 WEST MULBERRY STREET
CANTON OHIO

PLEASE LET US KNOW YOUR PLANS FOR SUMMER VISIT X LOVE
RITA

REC'D SENT

Here is an example of a plain-language message as it would be prepared for delivery. If the message were for relay instead of delivery, the information at the bottom would be filled in instead of that in the box.

Traffic work need not be a complicated or time-consuming activity for the casual or occasional message-handler. Amateurs may participate in traffic work to whatever extent they wish, from an occasional message now and then to becoming a part of organized traffic systems. This chapter explains some principles so the reader may know where to find out more about the subject and may exercise the message-handling privilege to best effect as the spirit and opportunity arise.

Responsibility

Amateurs who originate messages for transmission or who receive messages for relay or delivery should first consider that in doing so they are accepting the responsibility of clearing the message from their station on its way to its destination in the shortest possible time. Forty-eight hours after filing or receipt is the generally-accepted rule among traffic-handling amateurs, but it is obvious that if every amateur who relayed the message allowed it to remain in his station this long it might be a long time reaching its destination. Traffic should be relayed or delivered as quickly as possible.

Message Form

Once this responsibility is realized and accepted, handling the message becomes a matter of following generally-accepted standards of form and transmission. For this purpose, each message is divided into four parts: the preamble, the address, the text and the signature. Some of these parts themselves are subdivided. It is necessary in preparing the message for transmission and in actually transmitting it to know not only what each part is and what it is for, but to know in what *order* it should be transmitted, and to know the various procedure signals used with it when sent by cw. If you are going to send a message, you may as well send it right.

Standardization is important! There is a great deal of room for expressing originality and individuality in amateur radio, but there are also times and places where such expression can only cause confusion and inefficiency. Recognizing the need for standardization in message form and message transmitting procedures, ARRL has long since recommended such standards, and most traffic-interested amateurs have followed them. In general, these recommendations, and the various changes they have undergone from year to year, have been at the request of amateurs participating in this activity, and they are completely outlined and explained in *Operating an Amateur Radio Station* a copy of which is available upon request or by use of the coupon at the end of this chapter.

Clearing a Message

The best way to clear a message is to put it into one of the many organized traffic networks, or to give it to a station that can do so. There are many amateurs who make the handling of traffic their principal operating activity, and many more still who participate in this activity to a greater or lesser extent. The result is a system of traffic nets which spreads to all corners of the United States and covers most U.S. possessions and Canada. Once a message gets into one of these nets, regardless of the net's size or coverage, it is systematically routed toward its destination in the shortest possible time.

Amateurs not experienced in message handling should depend on the experienced message-handler to get a message through, if it is important; but the average amateur can enjoy operating with a message to be handled either through a local traffic net or by free-lancing. The latter may be accomplished by careful listening for an amateur station at desired points, directional CQs, use of recognized calling and net frequencies, or by making and keeping a schedule with another amateur for regular work between specified points. He may well aim at learning and enjoying through doing. The joy and accomplishment in thus developing one's operating skill to the peak of perfection has a reward all its own.

If you decide to "take the bull by the horns" and put the message into a traffic net yourself (and more power to you if you do!), you will need to know something about how nets operate, and the special Q signals and procedure they use to dispatch all traffic with a maximum of efficiency. The frequency and operating time of the net in your section, or of other nets into which your message can go, is given in ARRL's Net Directory. This annually-revised publication is available on request. Listening for a few minutes at the time and frequency indicated should acquaint you with enough fundamentals to enable you to report into the net and indicate your traffic. From that time on you follow the instructions of the net control station, who will tell you when and to whom (and on what frequency, if different from the net frequency) to send your message. Since cw nets use the special "QN" signals, it is helpful to have a list of these before you (available from ARRL Hq., Operating Aid No. 9B).

Network Operation

About this time, you may find that you are enjoying this type of operating activity and want to know more about it and increase your proficiency. Many amateurs are happily "addicted" to traffic handling after only one or two brief exposures to it. Much traffic is at present being conducted by cw, since this mode of communication seems to be popular for record purposes – but this does not mean that high code speed is a necessary prerequisite to working in traffic networks. There are many nets organized specifically for the slow-speed amateur, and most of the so-called "fast" nets are usually glad to slow down to accommodate slower operators.

It is a significant operating fact that code speed or word speed alone does *not* make for efficiency – sometimes the contrary! A high-speed operator who does not know procedure can "foul up" a net much more completely and more quickly than can a slow operator. It is a proven fact that a bunch of high-speed operators who are not "savvy" in net operation cannot accomplish as much during a specified period as an equal number of slow operators who *know* net procedure. Don't let low code speed deter you from getting into traffic work. Given a little time, your speed will reach the point where you can easily hold your own. Concentrate first on learning the net procedures.

Much traffic is also handled on phone. This mode is exceptionally well suited to short-range traffic work and requires knowledge of phonetics and procedure peculiar to voice operation. Procedure is of paramount importance on phone, since the public may be listening.

Teamwork is the theme of net operation. The net which functions most efficiently is the net in which all participants are thoroughly familiar with the procedure used, and in which operators refrain from transmitting except at the direction of the net control station, and do not occupy time with extraneous comments, even the exchange of pleasantries. There is a time and place for everything. When a net is in session it should concentrate on handling traffic until all trafic is cleared. Before or after the net is the time for rag-chewing and discussion. Some details of net operation are included in *Operating an Amateur Radio Station*, mentioned earlier, but there is no substitute for actual participation.

The National Traffic System

To facilitate and speed the movement of message traffic, there is in existence an integrated national system by means of which originated traffic can normally reach its destination area the same day the message is originated. This system uses the state or section net as a basis. Each section net sends a representative to a "region" net (normally covering a call area) and each "region" net sends a representative to an "area" net (normally covering a time zone). After the area net has cleared all its traffic, its members then go back to their respective region nets, where they clear traffic to the various section net representatives. By means of connecting schedules between the area nets, traffic can flow both ways so that traffic originated on the West Coast reaches the East Coast with a maximum of dispatch, and vice versa. In general section nets function at 1900, region nets at 1945, area nets at 2030 and the same or different regional personnel again at 2130. Some section nets conduct a late session at 2200 to effect traffic delivery the same night. Local standard time is referred to in each case.

The NTS plan somewhat spreads traffic opportunity so that casual traffic may be reported into nets for efficient handling one or two nights per week, early or late; or the ardent traffic man can operate in *both* early and late groups and in between to roll up impressive totals and speed

traffic reliably to its destination. Old-time traffic men who prefer a high degree of organization and teamwork have returned to the traffic game as a result of the new system. Beginners have shown more interest in becoming part of a system nationwide in scope, in which *anyone* can participate. The National Traffic System has vast and intriguing possibilities as an amateur service. It is open to any amateur who wishes to participate.

The above is but the briefest resume of what is of necessity a rather complicated arrangement of nets and schedules. Complete details of the System and its operation are included in the ARRL *Public Service Communications Manual.*

EMERGENCY COMMUNICATION

One of the most important ways in which the amateur serves the public, thus making his existence a national asset, is by his preparation for and his participation in communications emergencies. Every amateur, regardless of the extent of his normal operating activities, should give some thought to the possibility of his being the only means of communication should his community be cut off from the outside world. It has happened many times, often in the most unlikely places; it has happened without warning, finding some amateurs totally unprepared; it can happen to *you*. Are you ready?

There are two principal ways in which any amateur can prepare himself for such an eventuality. One is to provide himself with equipment capable of operating on any type of emergency power (i.e., either ac or dc), and equipment which can readily be transported to the scene of disaster. Mobile equipment is especially desirable in most emergency situations.

Such equipment, regardless of how elaborate or how modern, is of little use, however, if it is not used properly and at the right times; and so another way for an amateur to prepare himself for emergencies, by no means less important than the first, is to *learn to operate efficiently*. There are many amateurs who feel that they know how to operate efficiently but who find themselves considerably handicapped at the crucial time by not knowing proper procedure, by being unable, due to years of casual amateur operation, to adapt themselves to snappy, abbreviated transmissions, and by being unfamiliar with message form and procedures. It is dangerous to overrate your ability in this; it is better to assume you have things to learn.

In general it can be said that there is more emergency equipment available than there are operators who know properly how to operate during emergency conditions, for such conditions require clipped, terse procedure with complete break-in on cw and fast push-to-talk on phone. The casual rag-chewing aspect of amateur radio, however enjoyable and worth-while in its place, must be forgotten at such times in favor of the business at hand. There is only one way to gain experience in this type of operation, and that is by practice. During an emergency is no time for practice; it should be done beforehand, as often as possible, on a regular basis.

This leads up to the necessity for emergency organization and preparedness. ARRL has long recognized this necessity and has provided for it. The Section Communications Manager (whose address appears on page 6 of every issue of *QST*) is empowered to appoint certain qualified amateurs in his section for the purpose of coordinating emergency communication organization and preparedness in specified areas or communities. This appointee is known as an Emergency Coordinator for the city or town. One should be specified for each community. For coordination and promotion at section level a Section Emergency Coordinator arranges for and recommends the appointments of various Emergency Coordinators at activity points throughout the section. Emergency Coordinators organize amateurs in their communities according to local needs for emergency communication facilities.

The community amateurs taking part in the local organization are members of the Amateur Radio Emergency Corps (AREC). *All* amateurs are invited to register in the AREC, whether they are able to play an active part in their local

Before Emergency

PREPARE yourself by providing emergency power for your station.

TEST your emergency equipment and operating ability in the annual Simulated Emergency Test and Field Day.

REGISTER with your ARRL Emergency Coordinator. If none, offer your services to local and civic relief agencies and explain what amateur radio can do during disasters.

In Emergency

LISTEN before you transmit, *always*!

REPORT to your Emergency Coordinator so he will have latest data on your facilities. Offer local civic and relief agencies your services directly in the absence of an EC.

RESTRICT all on-the-air work in accordance with FCC regulations, Sec. 97.107.

$\overline{\text{SOS}}$ is the International Distress Call for a dire emergency. The phone equivalent is MAYDAY. Use these calls for *emergency only*. False distress calls are unlawful.

RESPECT the fact that success in emergency depends on circuit discipline. The net control station is the supreme authority.

COOPERATE with those we serve. Be ready to help, but stay off the air unless there is a specific job to be done that you can handle more efficiently than any other station.

COPY bulletins from W1AW. During emergencies, special bulletins are transmitted.

After Emergency

REPORT to ARRL Headquarters promptly and fully so that the Amateur Service can receive full credit.

organization or only a supporting role. Application blanks are available from your EC, SEC, SCM or direct from ARRL Headquarters. In the event that inquiry reveals no Emergency Coordinator appointed for your community, your SCM would welcome a recommendation either from yourself or from a radio club of which you are a member. By holding an amateur operator license, you have the responsibility to your community and to amateur radio to uphold the traditions of the service.

Among the League's publications is a booklet entitled *Public Service Communications.* This booklet, while small in size, contains a wealth of information on AREC organization and functions and is invaluable to any amateur participating in emergency or civil defense work. It is free to AREC members and should be in every amateur's shack. Drop a line to the ARRL Communications Department if you want a copy, or use the coupon at the end of this chapter.

The Radio Amateur Civil Emergency Service

Following World War II there was established within our government the Federal Civil Defense Administration (FCDA), which, at the behest of ARRL and other amateurs, considered the role of the amateur in civil defense communication should the U.S. become embroiled in another war. This resulted, in 1951, in the establishment of the Radio Amateur Civil Emergency Service (RACES) with rules promulgated by FCC as a part of the Amateur Radio Service. FCDA has evolved into the present Office of Civil Defense, part of the Department of the Army, and although the RACES rules have undergone several minor changes they are still essentially the same as originally put into effect. In 1966, by action of the ARRL Board of Directors, RACES was recognized as an essential part of the amateur's public service effort by including it nominally in the League's Amateur Radio Public Service Corps as a division thereof.

RACES is intended solely for civil defense communication through the medium of amateur radio and is designed to continue operation during any extreme national emergency such as war. It shares certain segments of frequencies with the regular (i.e., normal) Amateur Service on a nonexclusive basis. Its regulations are a subpart of the familiar amateur regulations (Part 97) and are included in full in the ARRL *License Manual.*

If *every* amateur participated, we would still be short of the total operating personnel required properly to implement RACES. As the service which bears the responsibility for the successful implementation of this important function, we face not only the task of installing (and in some cases building) the necessary equipment, but also of the training of thousands of additional people. This can and should be a function of the local unit of the Amateur Radio Emergency Corps under its EC and his assistants, working in close collaboration with the local civil defense organization.

The first step in organizing RACES locally is the appointment of a radio officer by the local civil defense director, possibly on the recommendation of his communications officer. A complete and detailed communications plan must be approved successively by local, state and OCD regional directors, by the OCD national office, and by FCC. Once this has been accomplished, applications for station authorizations under this plan can be submitted direct to FCC. *QST* carries further information from time to time, and ARRL will keep its field officials fully informed by bulletins as the situation requires. A complete bibliography of *QST* articles dealing with the subject of civil defense and RACES is available upon request from the ARRL Communications Department.

In the event of war, civil defense will place great reliance on RACES for back-up radio communication. Even in peacetime, RACES can be of great value in natural disaster communications. As a part of our Amateur Service and our Public Service Corps, it deserves our whole-hearted and enthusiastic support and will permit us to continue to function in the public service, as amateurs, in RACES in wartime as we function in AREC and NTS during peacetime. If interested, inquire of your local civil defense agency and get signed up with your radio officer.

ARRL OPERATING ORGANIZATION

Amateur operation must have point and constructive purpose to win public respect. Each individual amateur is the ambassador of the entire fraternity in his public relations and attitude toward his hobby. ARRL field organization adds point and purpose to amateur operating.

The Communications Department of the League is concerned with the practical operation of stations in all branches of amateur activity. Appointments or awards are available for ragchewer, traffic enthusiast, phone operator, DX man and experimenter.

There are seventy-four ARRL Sections in the League's field organization, which embraces the United States, Canada, and certain other territory. Operating affairs in each Section are supervised by a Section Communications Manager (SCM) elected by members in that section for a two-year term of office. Organization appointments are made by the SCMs, elected as provided in the Rules and Regulations of the Communications Department, which accompany the League's By-Laws and Articles of Association. SCM addresses for all sections are given in full in each issue of *QST.* SCMs welcome monthly activity reports from all amateurs in their sections, regardless of status.

Whether your activity embraces phone or telegraphy, or both, there is a place for you in the League organization.

LEADERSHIP POSTS

To advance each type of station work and group interest in amateur radio, and to develop practical communications plans with the greatest success, appointments of leaders and organizers in particular single-interest fields are made by SCMs. Each leadership post is important. Each provides activities and assistance for appointee groups and individual members along the lines of natural interest. Some posts further the general ability of amateurs to communicate efficiently at all times by pointing activity toward networks and round tables; others are aimed specifically at establishment of provisions for organizing the amateur service as a standby communications group to serve the public in disaster, civil defense need or emergency of any sort. The SCM appoints the following in accordance with section needs and individual qualifications:

PAM Phone Activities Manager. Organizes activities for voice operators in his section. Promotes phone nets and recruits Official Phone Station appointees. The appointment of VHF-PAM is open to both General and Technician licensees.

RM Route Manager. Organizes and coordinates cw traffic activities. Supervises and promotes nets and recruits Official Relay Station appointees.

SEC Section Emergency Coordinator. Promotes and administers section emergency radio organization.

EC Emergency Coordinator. Organizes amateurs of a community or other local areas for emergency radio service; maintains liaison with officials and agencies served, also with other local communication facilities. Sponsors tests, recruits for AREC and encourages alignment with RACES.

STATION APPOINTMENTS

ARRL's field organization has a place for every active amateur who has a station. The Communications Department organization exists to increase individual enjoyment and station effectiveness in amateur radio work, and we extend a cordial invitation to every amateur to participate fully in the activities, to report results monthly, and to apply to the SCM for one of the following station appointments. ARRL membership and the conditional class or higher license or VE equivalent is prerequisite to all appointments, except where otherwise indicated.

OPS Official Phone Station. Sets high voice operating standards and procedures, furthers phone nets and traffic.

ORS Official Relay Station. Traffic service, operates cw nets; noted for 15 wpm and procedure ability. Open to RTTY traffickers.

OBS Official Bulletin Station. Transmits ARRL and FCC bulletin information to amateurs. Open to Technician licensees.

OVS Official VHF Station. Collects and reports vhf-uhf-shf propagation data, may engage in facsimile, TT, TV, work on 50 MHz and/or above. Takes part as feasible in vhf traffic work, reports same, supports vhf nets, observes procedure standards. Open to both Novice and Technician licensees.

OO Official Observer. Sends cooperative notices to amateurs to assist in frequency observance, insures high-quality signals, and prevents FCC trouble.

Emblem Colors

Members wear the ARRL emblem with black-enamel background. A red background for an emblem will indicate that the wearer is SCM. SECs, ECs, RMs and PAMs may wear the emblem with green background. Observers and all *station* appointees are entitled to wear blue emblems.

NETS

Amateurs gain experience and pleasure and add much accomplishment to the credit of all of amateur radio when organized into effective nets interconnecting cities and towns.

The successful operation of a net depends a lot on the Net Control Station. This station should be chosen carefully and be one that will not hesitate to enforce each and every net rule and set the example in his own operation.

A progressive net grows, obtaining new members both directly and through other net members. Bulletins may be issued at intervals to keep in direct contact with the members regarding general net activity, to keep tabs on net procedure, make suggestions for improvement, keep track of active members and weed out inactive ones.

A National Traffic System is sponsored by ARRL to facilitate the overall expeditious relay and delivery of message traffic. The system recognizes the need for handling traffic beyond the section-level networks that have the popular support of both phone and cw groups (OPS and ORS) throughout the League's field organization. Area and regional provisions for NTS are furthered by Headquarters correspondence. The ARRL Net Directory, revised each fall, includes the frequencies and times of operation of the hundreds of different nets operating on amateur band frequencies.

RADIO CLUB AFFILIATION

ARRL is pleased to grant affiliation to any amateur society having (1) at least 51% of the

voting club membership as full members of the League, and (2) at least 51% of members government-licensed radio amateurs. In high school and college radio clubs *bearing the school name*, the above requirements are modified to require only that the trustee or sponsor (for example) is a licensed amateur and a full member of ARRL. Where a society has common aims and wishes to add strength to that of other club groups and strengthen amateur radio by affiliation with the national amateur organization, a request addressed to the Communications Manager will bring the necessary forms and information to initiate the application for affiliation. Such clubs receive field-organization bulletins and special information at intervals for posting on club bulletin boards or for relay to their memberships. A travel plan providing communications, technical and secretarial contact from the Headquarters is worked out seasonally to give maximum benefits to as many as possible of the thirteen hundred *active* affiliated radio clubs. Papers on club work, suggestions for organizing, for constitutions, for radio courses of study, etc., are available on request.

Club Training Aids

One section of the ARRL Communications Department handles the Training Aids Program. This program is primarily a service to ARRL affiliated clubs. Material is aimed at education, training and entertainment of club members. Interesting quiz material is available.

Training Aids include such items as motion-picture films, slides, audio tapes and lecture outlines. Bookings are limited to ARRL-affiliated clubs primarily, since the visual aids listings are not sufficiently extensive to permit such services to other groups.

All Training Aids materials are loaned free (except for shipping charges) to ARRL affiliated clubs. Numerous groups use this ARRL service to good advantage. If your club is affiliated but has not yet taken advantage of this service, you are missing a good chance to add the available features to your meeting programs and general club activities. Watch club bulletins and *QST* or write the ARRL Communications Department for TA-21.

W1AW

The Maxim Memorial Station, W1AW, is dedicated to fraternity and service. Operated by the League headquarters, W1AW is located adjacent to the Headquarters offices on a seven-acre site. The station is on the air daily, except holidays, and available time is divided between the different bands and modes. Telegraph and phone transmitters are provided for all bands from 1.8 to 144 MHz. Visiting hours and the station schedule are listed every month in *QST*.

Operation is roughly proportional to amateur interest in different bands and modes, with one kW except on 160 and vhf bands. W1AW's daily bulletins and code practice aim to give operational help to the largest number.

W1AW was established as a living memorial to Hiram Percy Maxim, to carry on the work and traditions of amateur radio. The station is on the air daily and is open to visitors at all times it is in operation. The W1AW schedule of operation and visiting hours is printed each month in the *Operating News* section of *QST*.

OPERATING ACTIVITIES

Within the ARRL field organization there are special activities. For all appointees and officials (phone and cw) quarterly CD (Communications Department) parties are scheduled to develop operating ability and a spirit of fraternalism.

In addition to those for appointees and officials, ARRL sponsors various other activities open to all amateurs. The DX-minded amateur may participate in the Annual ARRL International DX Competition during February and March. This popular contest may bring you the thrill of working new countries and building up your DXCC totals; certificate awards are offered to top scorers in each country and ARRL section (see page 6 of any *QST*) and to club leaders. Then there is the very-popular Sweepstakes in November. Of domestic scope, the SS affords the opportunity to work new states for that WAS award. A Novice activity is planned annually. A 160-Meter Contest is scheduled for early December. The interests of vhf enthusiasts are also provided for in contests held in January, June and September of each year. Where enough logs (three) are received to constitute minimum "competition" a certificate in spot activities, such as the "SS" and vhf party, is awarded the leading newcomer for his work considered only in competition with other newcomers.

As in all our operating, the idea of having a good time is combined in the Annual June Field Day with the more serious thought of preparing ourselves to render public service in times of emergency. A premium is placed on the use of equipment without connection to commercial power sources. Clubs and individual groups always enjoy themselves in the "FD" and learn much about the requirements for operating under knockabout conditions afield.

ARRL contest activities are diversified to

appeal to all operating interest, and will be found announced in detail in issues of *QST* preceding the different events.

AWARDS

The League-sponsored operating activities, heretofore mentioned have useful objectives and provide much enjoyment for members of the fraternity. Achievement in amateur radio is recognized by various certificates offered through the League and detailed below.

WAS Award

WAS means "Worked All States." An amateur, anywhere in the world, who succeeds in getting confirmed contacts with all fifty U.S. states and sends them in for examination, may receive this award from the League. There is a nominal service charge to those amateurs located within the League's operating territory (U.S., possessions, Puerto Rico and Canada) who are not ARRL members. For others, there is no charge except postage, which is expected to accompany the cards.

You can make the contacts over any period of time and on any or all amateur bands. If you wish, you may have your WAS award issued for some special way in which you made it, such as all cw, all phone, all on one band, all with lower power, etc. – only providing all cards submitted plainly show that a contact took place under the special circumstances for which you wish the award issued.

Before you send your cards, drop the ARRL Communications Department a line requesting a copy of the rules and an application blank.

5BWAS

The Five Band Worked All States Award became effective January 1, 1970. Only contacts made after that date count. Contacts must be confirmed with all 50 states on each of five amateur bands. Rules require applicants in the U.S. and possessions, Puerto Rico and Canada, to be a full member of ARRL. Basic WAS rules apply, with the addition of an applications' form fee of $10 (U.S.). This fee covers cost of return of the cards by first-class registered mail and a personalized plaque.

DX Century Club Award

The DXCC is one of the most popular and sought-after awards in all of amateur radio, and among the most difficult to acquire. Its issuance is carefully supervised at ARRL headquarters by an Assistant Communications Manager who spends full time on this function alone.

To obtain DXCC, an amateur must make two-way contact with 100 "countries" listed on ARRL Operating Aid No. 7, which also contains the complete rules. Written confirmations are required for proof of contact. Such confirmations must be sent to ARRL headquarters, where each one is carefully scrutinized to make sure it actually confirms a contact with the applying amateur, that it was not altered or tampered with, and that the "country" claimed is actually on the ARRL list. Further safeguards are applied to maintain the high standards of this award. A handsome king-size certificate is sent to each amateur qualifying.

The term "country" is an arbitrary one not necessarily agreeing with the dictionary definition of such. For DXCC purposes, many bodies of land not having independent status politically are classified as countries. For example, Alaska and Hawaii, while states of the U.S., are considered separate "countries" because of their distance from the mainland. There are over 300 such designations on the ARRL list. Once a basic DXCC is issued, the certificate can be endorsed, by sticker, for additional countries by sending the additional cards in to headquarters for checking.

A separate DXCC award is also available for stations making all contacts by phone.

Because of the meticulous care in checking cards and handling this award, amateurs in the U.S., its possessions (including P.R.) and Canada who are not League members, are charged a nominal service fee both for basic DXCC and endorsements.

Before sending in your cards, be sure you are familiar with the rules (ARRL Operating Aid No. 7), which are quite detailed. In addition, get a copy of the DXCC application form (CD-164).

Five-Band DXCC

Entirely separate from DXCC, ARRL also offers a Five-Band DXCC (5BDXCC) Award for those amateurs who submit written proof of having made two-way contact with 100 or more countries on each of five amateur bands since January 1, 1969. Only full ARRL members are eligible in the U.S., possessions and Canada; elsewhere, any amateur may apply.

A charge of $10 (U.S.) is made for application forms; this covers the cost of returning cards by first class registered mail and issuance of a personalized engraved plaque for those qualifying.

For a copy of the complete rules, drop a line to ARRL Headquarters, 225 Main St., Newington, CT 06111.

WAC Award

The WAC award, Worked All Continents, is issued by the International Amateur Radio Union (IARU) upon proof of contact with each of the six continents. Amateurs in the U.S.A., Possessions and Canada should apply for the award through ARRL, headquarters society of the IARU. Those elsewhere must submit direct to their own IARU member-society. Residents of countries not represented in the Union may apply directly to ARRL for the award. Two basic types of WAC certificates are issued. One contains no endorsements and is awarded for cw, or a combination of cw and phone contacts; the other is awarded when all work is done on phone. There is a special endorsement to the phone WAC when all the confirmations submitted clearly indicate that the work was done on two-way ssb. The *only* special band endorsements are for 1.8, 3.5 and 50 MHz.

Code Proficiency Award

Many hams can follow the general idea of a contact "by ear" but when pressed to "write it down" they "muff" the copy. The Code Proficiency Award permits each amateur to prove himself as a proficient operator, and sets up a system of awards for step-by-step gains in copying proficiency. It enables every amateur to check his code proficiency, to better that proficiency, and to receive a certification of his receiving speed.

This program is a whale of a lot of fun. The League will give a certificate to any interested individual, who demonstrates that he can copy perfectly, for at least one minute, plain-language Continental code at 10, 15, 20, 25, 30 or 35 words per minute, as transmitted monthly from W1AW and W6OWP.

As part of the ARRL Code Proficiency program W1AW transmits plain-language practice material each evening and week-day morning at speeds from 5 to 35 wpm, occasionally in reverse order. All amateurs are invited to use these transmissions to increase their code-copying ability. Non-amateurs are invited to utilize the lower speeds, 5, 7 1/2 and 10 wpm, which are transmitted for the benefit of persons studying the code in preparation for the amateur license examination. Refer to any issue of *QST* for details.

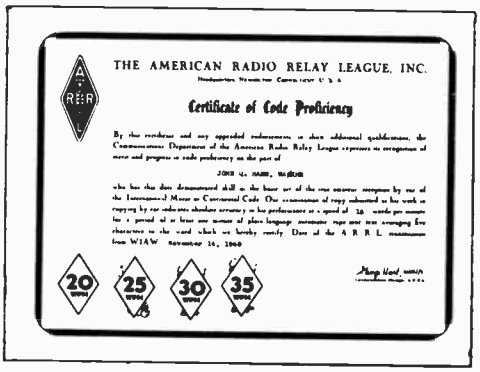
THE AMERICAN RADIO RELAY LEAGUE, INC.

Certificate of Code Proficiency

20 25 30 35

Rag Chewers Club

The Rag Chewers Club is designed to encourage friendly contacts and discourage the "hello-goodbye" type of QSO. It furthers fraternalism through amateur radio.

Membership certificates are awarded to amateurs who report a fraternal-type contact with another amateur lasting a half hour or longer. This does not mean a half hour spent trying to get a message through or in trying to work a rare DX station, but a solid half hour of pleasant "visiting" with another amateur discussing subjects of mutual interest and getting to know each other. If nominating someone for RCC, please send the information to the nominee who will (in turn) apply to Headquarters for RCC.

Members sign "RCC" after their calls to indicate that they are interested in a chat, not just a contact.

Operating Aids

The following Operating Aids are available free, upon request: 4) Emergency Operating. 5) DX Operating Code. 6) Contest Duplicate Contact Record. 7) DXCC Countries List. 8) W.A.S. Record. 9b) ARRL Message Form. 13) Ready Reference Information. 14) A composite aid; Ending Signals, Time Conversion, Phonetic Alphabets, RST System and Steps in an Emergency.

A-1 Operator Club

The A-1 Operator Club should include in its ranks every good operator. To become a member, one must be nominated by at least two operators who already belong. General keying or voice technique, procedure, copying ability, judgment and courtesy all count in rating candidates under the club rules detailed at length in *Operating an Amateur Radio Station.* Aim to make yourself a fine operator, and one of these days you may be pleasantly surprised by an invitation to belong to the A-1 Operator Club, which carries a worthwhile certificate in its own right.

Brass Pounders League

Every individual reporting more than a specified minimum of official monthly traffic totals is given an honor place in the *QST* listing known as the Brass Pounders League and a certificate to recognize his performance is furnished by the SCM. In addition, a *BPL Traffic Award* (medallion) is given to individual amateurs working at their own stations after the third time they "make BPL" provided it is duly reported to the SCM and recorded in *QST.*

Public Service Honor Roll

A new listing, supplementing the BPL, was started in 1970. It takes into account the many public service functions of amateurs in addition to the handling of record messages. Points can be claimed for checking into and participating in nets, for serving as net control stations, as liaison between nets, for handling phone patches, for making BPL, for handling real emergency traffic and for serving as a net manager. Each such function has a maximum number of points per month so that nobody can make the PSHR by performing a single type of function, except handling emergency traffic. Versatility in public service is encouraged and rewarded. See *QST* for details.

Old Timers Club

The Old Timers Club is open to anyone who holds an amateur call at the present time, and who held an amateur license (operator or station) 20-or-more years ago. Lapses in activity during the intervening years are permitted.

If you can qualify as an "Old Timer," send an outline of your ham career. Indicate the date of your first amateur license and your present call. If eligible for the OTC, you will be added to the roster and will receive a membership certificate.

COUNTRIES LIST • (Use A.R.R.L. Op. Aid 7 for DXCC Purposes)

A2 ..... Botswana
AC3 ..... Sikkim
AC4 ..... Tibet
AC ..... Bhutan
AP ..... Pakistan
BV ..... Taiwan
BY ..... China
C2 ..... Nauru
C3 ..... Andorra
CE ..... Chile
CE9AA-AM, FB8Y, KC4, LA, LU-Z, OR, UA1, VKØ, VP8, ZL5, 8J ..... Antarctica
CEØA ..... Easter Island
CEØZ Juan Fernandez Archipelago
CEØX ..... San Felix
CM, CO ..... Cuba
CN2, 8, 9 ..... Morocco
CP ..... Bolivia
CR3 ..... Portuguese Guinea
CR4 ..... Cape Verde Islands
CR5 ..... Principe, Sao Thome
CR6 ..... Angola
CR7 ..... Mozambique
CR8 ..... Portuguese Timor
CR9 ..... Macao
CT1 ..... Portugal
CT2 ..... Azores
CT3 ..... Madeira Islands
CX ..... Uruguay
DA, DJ, DK, DL, DM ... Germany
DU, DX ..... Philippine Islands
EA ..... Spain
EA6 ..... Balearic Islands
EA8 ..... Canary Islands
EA9 ..... Rio de Oro
EA9 ..... Ceuta, Melilla
EI ..... Republic of Ireland
EL ..... Liberia
EP ..... Iran
ET3, 9F ..... Ethiopia
F ..... France
FB8Z .. Amsterdam & St. Paul Isls.
FB8Y ..... (See CE9AA-AM)
FB8W ..... Crozet Island
FB8X ..... Kerguelen Islands
FC ..... Corsica
FG7 ..... Guadeloupe
FH8 ..... Comoro Islands
FK8 ..... New Caledonia
FL8 ..... French Somaliland
FM7 ..... Martinique
FO8 ..... Clipperton Island
FO8 ..... French Oceania
FP8 .. St. Pierre & Miquelon Islands
FR7 ..... Gloriosa Islands
FR7 ..... Juan de Nova
FR7 ..... Reunion
FR7 ..... Tromelin
FS7 ..... Saint Martin
FW8 ..... Wallis & Futuna Islands
FY7 ..... French Guiana & Inini
G ..... England
GC .... Guernsey & Dependencies
GC ..... Jersey Island
GD ..... Isle of Man
GI ..... Northern Ireland
GM ..... Scotland
GW ..... Wales
HA, HG ..... Hungary
HB ..... Switzerland
HBØ ..... Liechtenstein
HC ..... Ecuador
HC8 ..... Galapagos Islands
HH ..... Haiti
HI ..... Dominican Republic
HK ..... Colombia
HKØ ..... Bajo Nuevo
HKØ ..... Malpelo Island
HKØ ... San Andres & Providencia
HKØ ..... (See KS4B)
HL, HM ..... Korea
HP ..... Panama
HR ..... Honduras
HS ..... Thailand
HV ..... Vatican
HZ, 7Z ..... Saudi Arabia
I, IT ..... Italy
IS ..... Sardinia
JA, JR, JH, KA ..... Japan
JD ..... Ogasawara Islands
JD ..... Minami Torishima
JT ..... Mongolia
JW ..... Svalbard
JX ..... Jan Mayen
JY ..... Jordan
K, W .... United States of America
KB6 Baker, Howland & American Phoenix Islands
KC4 ..... Navassa Island
KC4 ..... (See CE9AA-AM)
KC6 ..... Eastern Caroline Islands
KC6 ..... Western Caroline Islands
KG4 ..... Guantanamo Bay
KG6 ..... Guam
KG6R, S, T ..... Mariana Islands
KH6 ..... Hawaiian Islands
KH6 ..... Kure Island
KJ6 ..... Johnston Island
KL7 ..... Alaska
KM6 ..... Midway Islands
KP4 ..... Puerto Rico
KP6 .. Palmyra Group, Jarvis Island
KR6, 8 ..... Ryukyu Islands
KS4B, HKØ ..... Serrana Bank & Roncador Cay
KS4 ..... Swan Islands
KS6 ..... American Samoa
KV4 ..... Virgin Islands
KW6 ..... Wake Island
KX6 ..... Marshall Islands
KZ5 ..... Canal Zone
LA, LG ..... Norway
LA ..... (See CE9AA-AM)
LU ..... Argentina
LU ..... (See CE9AA-AM)
LX ..... Luxembourg
LZ ..... Bulgaria
M1, 9A1 ..... San Marino
MP4B ..... Bahrein
MP4Q ..... Qatar
MP4M, VS9O ..... Sultanate of Muscat & Oman
MP4D, T ..... Trucial Oman
OA ..... Peru
OE ..... Austria
OH, OF ..... Finland
OHØ ..... Aland Islands
OJØ ..... Market
OK, OL ..... Czechoslovakia
ON ..... Belgium
OR ..... (See CE9AA-AM)
OX, XP ..... Greenland
OY ..... Faroe Islands
OZ ..... Denmark
PA, PD, PE, PI ..... Netherlands
PJ ..... Netherlands Antilles
PJ Sint Maarten, Saba & St. Eustatius
PY ..... Brazil
PYØ ..... Fernando de Noronha
PYØ ... St. Peter & St. Paul's Rocks
PYØ ..... Trinidade & Martim Vaz Islands
PZ1 ..... Surinam
SK, SL, SM ..... Sweden
SP ..... Poland
ST2 ..... Sudan
SU ..... Egypt
SV ..... Crete
SV ..... Dodecanese
SV ..... Greece
TA ..... Turkey
TF ..... Iceland
TG ..... Guatemala
TI ..... Costa Rica
TI9 ..... Cocos Island
TJ ..... Cameroun
TL ..... Central African Republic
TN ..... Congo Republic
TR ..... Gabon Republic
TT ..... Chad Republic
TU ..... Ivory Coast
TY ..... Dahomey Republic
TZ ..... Mali Republic
UA, UK1, 3, 4, 6, UV, UW1-6, UN1 . UN1 . European Russian S.F.S.R.
UA1, UK ..... (See CE9AA-AM)
UA1, UK ..... Franz Josef Land
UA2, UK2F ..... Kaliningradsk
UA, UK, UV, UW9, Ø ..... Asiatic Russian S.F.S.F.
UB5, UK5, UT5, UY5 .... Ukraine
UC2, UK ..... White Russian S.S.R.
UD6, UK6C/D/K ..... Azerbaijan
UF6, UK6F/O/Q/V ..... Georgia
UG6, UK6G ..... Armenia
UH8, UK8H ..... Turkoman
UI8, UK8Z ..... Uzbek
UJ8, UK8J/R ..... Tadzhik
UL7, UK7 ..... Kazakh
UM8, UK8M ..... Kirghiz
UO5, UK5O ..... Moldavia
UP2, UK2B/P ..... Lithuania
UQ2, UK2G/Q ..... Latvia
UR2, UK2R/T ..... Estonia
VE ..... Canada
VK ..... Australia
VK ..... Lord Howe Island
VK ..... Willis Islands
VK9X ..... Christmas Island
VK9Y ..... Cocos Islands
VK9N ..... Norfolk Island
VK9AA-MZ ..... Papua Territory
VK9AA-MZ ..... Territory of New Guinea
VKØ ..... Heard Island
VKØ ..... Macquarie Island
VKØ ..... (See CE9AA-AM)
VO ..... Newfoundland, Labrador
VP1 ..... British Honduras
VP2E, K ..... Anguilla
VP2A ..... Antigua, Barbuda
VP2V ..... British Virgin Islands
VP2D ..... Dominica
VP2G ... Granada & Dependencies
VP2M ..... Montserrat
VP2K ..... St. Kitts, Nevis
VP2L ..... St. Lucia
VP2S ..... St. Vincent & Dependencies
VP5 ..... Turks & Caicos Islands
VP7 ..... Bahama Islands
VP8 ..... (See CE9AA-AM)
VP8 ..... Falkland Islands
VP8, LU-Z .. South Georgia Islands
VP8, LU-Z .. South Orkney Islands
VP8, LU-Z South Sandwich Islands
VP8, LU-Z, CE9 .. So. Shetland Is.
VP9 ..... Bermuda Islands
VQ1 ..... Zanzibar
VQ9 ..... Aldabra Islands
VQ9 ..... Chagos Islands
VQ9 ..... Desroches
VQ9 ..... Farquhar
VQ9 ..... Seychelles
VR1 ..... British Phoenix Islands
VR1 ..... Gilbert & Ellice Islands & Ocean Island
VR2 ..... Fiji Islands
VR3 . Fanning & Christmas Islands
VR4 ..... Solomon Islands
VR5 ..... Tonga Islands
VR6 ..... Pitcairn Island
VS5 ..... Brunei
VS6 ..... Hong Kong
VS9A, P, S ..... South Yemen
VS9K ..... Kamaran Islands
VS9M,8Q ..... Maldive Islands
VS9O ..... (See MP4M)
VU . Andaman and Nicobar Islands
VU ..... India
VU ..... Laccadive Islands
W ..... (See K)
XE, XF ..... Mexico
XF4 ..... Revilla Gigedo
XP ..... (See OX)
XT ..... Voltaic Rep.
XU ..... Cambodia
XV5 ..... (See 3W8)
XW8 ..... Laos
XZ2 ..... Burma
YA ..... Afghanistan
YB ..... Indonesia
YI ..... Iraq
YJ ..... New Hebrides
YK ..... Syria
YN, YNØ ..... Nicaragua
YO ..... Rumania
YS ..... Salvador
YU, YT ..... Yugoslavia
YV ..... Venezuela
YVØ ..... Aves Island
ZA ..... Albania
ZB2 ..... Gibraltar
ZC4 ..... (See 5B4)
ZD3 ..... The Gambia
ZD5 ..... Swaziland
ZD7 ..... St. Helena
ZD8 ..... Ascension Island

ZD9	Tristan da Cunha & Gough Islands
ZE	Rhodesia
ZF1	Cayman Islands
ZK1	Cook Islands
ZK1	Manihiki Islands
ZK2	Niue
ZL	Auckland Is. & Campbel Is.
ZL	Chatham Islands
ZL	Kermadec Islands
ZL	New Zealand
ZL5	(See CE9AA-AM)
ZM7	Tokelau (Union) Islands
ZP	Paraguay
ZS1, 2, 4, 5, 6	South Africa
ZS2	Prince Edward & Marion Islands
ZS3	South-West Africa
3A	Monaco
3B6	Agalega
3B7	St. Brandon
3B8	Mauritius
3B9	Rodriguez
3C	Equatorial Guinea
3CØ	Annobon
3V8	Tunisia
3W8, XV5	Vietnam
3X	Rep. of Guinea
3Y	Bouvet
4S7	Ceylon
4U	I. T. U. Geneva
4W	Yemen
4X, 4Z	Israel
5A	Libya
5B4	Cyprus
5H3	Yanganyika
5N2	Nigeria
5R8	Malagasy Rep.
5T	Mauritania
5U7	Niger Rep.
5V	Togo
5W1	Western Samoa
5X5	Uganda
5Z4	Kenya
6O1, 2, 6	Somali Rep.
6W8	Senegal Rep.
6Y	Jamaica
7P	Lesotho
7Q	Nyasaland
7X	Algeria
7Z	(See HZ)
8J	(See CE9AA-AM)
8P	Barbados
8Q	(See VS9M)
8R	Guyana
8Z4	Saudi Arabia/Iraq N.Z.
9A1	(See M1)
9F	(See ET3)
9G1	Ghana
9H1	Malta
9J	Zambia
9K2	Kuwait
9L1	Sierra Leone
9M2	Malaya
9M6	Sabah
9M8	Sarawak
9N1	Nepal
9Q5	Rep. of Congo
9U5	Burundi
9V1	Singapore
9X5	Rwanda
9Y4	Trinidad & Tobago

INTERNATIONAL PREFIXES

AAA-ALZ	United States of America
AMA-AOZ	Spain
APA-ASZ	Pakistan
ATA-AWZ	India
AXA-AXZ	Commonwealth of Australia
AYA-AZZ	Argentine Republic
BAA-BZZ	China
CAA-CEZ	Chile
CFA-CKZ	Canada
CLA-CMZ	Cuba
CNA-CNZ	Morocco
COA-COZ	Cuba
CPA-CPZ	Bolivia
CQA-CRZ	Portuguese Overseas Provinces
CSA-CUZ	Portugal
CVA-CXZ	Uruguay
CYA-CZZ	Canada
DAA-DTZ	Germany
DUA-DZZ	Republic of the Philippines
EAA-EHZ	Spain
EIA-EJZ	Ireland
EKA-EKZ	Union of Soviet Socialist Rep.
ELA-ELZ	Liberia
EMA-EOZ	Union of Soviet Socialist Rep.
EPA-EQZ	Iran
ERA-ERZ	Union of Soviet Socialist Rep.
ESA-ESZ	Estonia
ETA-ETZ	Ethiopia
EUA-EWZ	Bielorussian Soviet Socialist Rep.
EXA-EZZ	Union of Soviet Socialist Rep.
FAA-FZZ	France and French Community
GAA-GZZ	United Kingdom
HAA-HAZ	Hungarian People's Republic
HBA-HBZ	Switzerland
HCA-HDZ	Ecuador
HEA-HEZ	Switzerland
HFA-HFZ	People's Republic of Poland
HGA-HGZ	Hungarian People's Republic
HHA-HHZ	Republic of Haiti
HIA-HIZ	Dominican Republic
HIA-HKZ	Republic of Colombia
HLA-HMZ	Korea
HNA-HNZ	Iraq
HOA-HPZ	Republic of Panama
HQA-HRZ	Republic of Honduras
HSA-HSZ	Thailand
HTA-HTZ	Nicaragua
HUZ-HUZ	Republic of El Salvador
HVA-HVZ	Vatican City State
HWA-HYZ	France and French Community
HZA-HZZ	Saudi Arabia
IAA-IZZ	Italy
JAA-JSZ	Japan
JTA-JVZ	Mongolian People's Republic
JWA-JXZ	Norway
JYA-JYZ	Jordan
JZA-JZZ	Western New Guinea
KAA-KZZ	United States of America
LAA-LNZ	Norway
LOA-LWZ	Argentine Republic
LXA-LXZ	Luxembourg
LYA-LYZ	Lithuania
LZA-LZZ	People's Republic of Bulgaria
MAA-MZZ	United Kingdom
NAA-NZZ	United States of America
OAA-OCZ	Peru
ODA-ODZ	Lebanon
OEA-OEZ	Austria
OFA-OJZ	Finland
OKA-OMZ	Czechoslovakia
ONA-OTZ	Belgium
OUA-OZZ	Denmark
PAA-PIZ	Netherlands
PJA-PJZ	Netherlands Antilles
PKA-POZ	Republic of Indonesia
PPA-PYZ	Brazil
PZA-PZZ	Surinam
QAA-QZZ	(Service abbreviations)
RAA-RZZ	Union of Soviet Socialist Rep.
SAA-SMZ	Sweden
SNA-SRZ	People's Republic of Poland
SSA-SSM	United Arab Republic
SSN-STZ	Sudan
SUA-SUZ	United Arab Republic
SVA-SZZ	Greece
TAA-TCZ	Turkey
TDA-TDZ	Guatemala
TEA-TEZ	Costa Rica
TFA-TFZ	Iceland
TGA-TGZ	Guatemala
THA-THZ	France and French Community
TIA-TIZ	Costa Rica
TJA-TJZ	Republic of Cameroon
TKA-TKZ	France and French Community
TLA-TLZ	Central African Republic
TMA-TMZ	France and French Community
TNA-TNZ	Republic of Congo (Brazzaville)
TOA-TQZ	France, French Community
TRA-TRZ	Republic of Gabon
TSA-TSZ	Tunisia
TTA-TTZ	Republic of Chad
TUA-TUZ	Republic of the Ivory Coast
TVA-TXZ	France and French Community
TYA-TYZ	Republic of Dahomey
TZA-TZZ	Republic of Mali
UAA-UQZ	Union of Soviet Socialist Republics
URA-UTZ	Ukrainian Soviet Socialist Rep.
UUA-UZZ	Union of Soviet Socialist Republics
VAA-VGZ	Canada
VHA-VNZ	Commonwealth of Australia
VOA-VOZ	Canada
VPA-VSZ	British Overseas Territories
VTA-VWZ	India
VXA-VYZ	Canada
VZA-VZZ	Commonwealth of Australia
WAA-WZZ	United States of America
XAA-XIZ	Mexico
XJA-XOZ	Canada
XPA-XPZ	Denmark
XQA-XRZ	Chile
XSA-XSZ	China
XTA-XTZ	Republic of the Upper Volta
XUA-XUZ	Cambodia
XVA-XVZ	Viet Nam
XWA-XWZ	Laos
XXA-XXZ	Portuguese Overseas Provinces
XYA-XZZ	Burma
YAA-YAZ	Afghanistan
YBA-YHA	Republic of Indonesia
YIA-YIZ	Iraq
YJA-YJZ	New Hebrides
YKA-YKZ	Syria
YLA-YLZ	Latvia
YMA-YMZ	Turkey
YNA-YNZ	Nicaragua
YOA-YRZ	Roumanian People's Republic
YSA-YSZ	Republic of El Salvador
YTA-YUZ	Yugoslavia

YVA-YYZ	Venezuela
YZA-YZZ	Yugoslavia
ZAA-ZAZ	Albania
ZBA-ZJZ	British Overseas Territories
ZKA-ZMZ	New Zealand
ZNA-ZOZ	British Overseas Territories
ZPA-ZPZ	Paraguay
ZQA-ZQZ	British Overseas Territories
ZRA-ZUZ	Republic of South Africa
ZVA-ZZZ	Brazil
2AA-2ZZ	Great Britain
3AA-3AZ	Monaco
3BA-3BZ	Mauritius
3CA-3CZ	Equatorial Guinea
3DA-3FZ	Canada
3GA-3GZ	Chile
3HA-3UZ	China
3VA-3VZ	Tunisia
3WA-3WZ	Viet Nam
3XA-3XZ	Guinea
3YA-3YZ	Norway
3ZA-3ZZ	People's Republic of Poland
4AA-4CZ	Mexico
4DA-4IZ	Republic of the Philippines
4JA-4LZ	Union of Soviet Socialist Rep.
4MA-4MZ	Venezuela
4NA-4OZ	Yugoslavia
4PA-4SZ	Ceylon
4TA-4TZ	Peru
4UA-4UZ	United Nations
4VA-4VZ	Republic of Haiti
4WA-4WZ	Yemen
4XA-4XZ	State of Israel
4YA-4YZ	International Civil Aviation Org.
4ZA-4ZZ	State of Israel
5AA-5AZ	Libya
5BA-5BZ	Republic of Cyprus
5CA-5GZ	Morocco
5HA-5IZ	Tanzania
5JA-5KZ	Colombia
5LA-5MZ	Liberia
5NA-5OZ	Nigeria
5PA-5QZ	Denmark
5RA-5SZ	Malagasy Republic
5TA-5TZ	Islamic Republic of Maurentania
5UA-5UZ	Republic of the Niger
5VA-5VZ	Togolese Republic
5WA-5WZ	Western Samoa
5XA-5XZ	Uganda
5YA-5ZZ	Kenya
6AA-6BZ	United Arab Republic
6CA-6CZ	Syria
6DA-6JZ	Mexico
6KA-6NZ	Korea
6OA-6OZ	Somalia
6PA-6SZ	Pakistan
6TA-6UZ	Sudan
6VA-6WZ	Republic of the Senegal
6XA-6XZ	Malagasy Republic
6YA-6YZ	Jamaica
6ZA-6ZZ	Liberia
7AA-7IZ	Indonesia
7JA-7NZ	Japan
7OA-7OZ	South Yemen Popular Republic
7QA-7QZ	Malawi
7RA-7RZ	Algeria
7SA-7SZ	Sweden
7TA-7YZ	Algeria
7ZA-7ZZ	Saudi Arabia
8AA-8IZ	Indonesia
8JA-8NZ	Japan
8OA-8OZ	Botswana
8PA-8PZ	Barbados
8QA-8QZ	Maldive Islands
8RA-8RZ	Guyana
8SA-8SZ	Sweden
8TA-8YZ	India
8ZA-8ZZ	Saudi Arabia
9AA-9AZ	San Marino
9BA-9DZ	Iran
9EA-9FZ	Ethiopia
9GA-9GZ	Ghana
9HA-9HZ	Malta
9IA-9JZ	Zambia
9KA-9KZ	Kuwait
9LA-9LZ	Sierra Leone
9MA-9MZ	Malaysia
9NA-9NZ	Nepal
9OA-9TZ	Republic of the Congo (leopoldville)
9UA-9UZ	Burundi
9VA-9VZ	Singapore
9WA-9WZ	Malaysia
9XA-9XZ	Rwanda
9YA-9ZZ	Trinidad and Tobago
A2A-A2Z	Republic of Botswana
C2A-C2Z	Republic of Nauru
C3A-C3Z	Principality of Andorra
L2A-L9Z	Argentina

ABBREVIATIONS FOR CW WORK

Abbreviations help to cut down unnecessary transmission. However, make it a rule not to abbreviate unnecessarily when working an operator of unknown experience.

AA	All after
AB	All before
ABT	About
ADR	Address
AGN	Again
ANT	Antenna
BCI	Broadcast interference
BCL	Broadcast listener
BK	Break; break me; break in
BN	All between; been
BUG	Semi-automatic key
C	Yes
CFM	Confirm; I confirm
CK	Check
CL	I am closing my station; call
CLD-CLG	Called; calling
CQ	Calling any station
CUD	Could
CUL	See you later
CUM	Come
CW	Continuous wave (i.e., radiotelegraph)
DLD-DLVD	Delivered
DX	Distance, foreign countries
ES	And, &
FB	Fine business; excellent
GA	Go ahead (or resume sending)
GB	Good-by
GBA	Give better address
GE	Good evening
GG	Going
GM	Good morning
GN	Good night
GND	Ground
GUD	Good
HI	The telegraphic laugh; high
HR	Here; hear
HV	Have
HW	How
LID	A poor operator
MA, MILS	Milliamperes
MSG	Message; prefix to radiogram
N	No
NCS	Net control station
ND	Nothing doing
NIL	Nothing; I have nothing for you
NM	No more
NR	Number
NW	Now; I resume transmission
OB	Old boy
OM	Old man
OP-OPR	Operator
OT	Old timer; old top
PBL	Preamble
PSE	Please
PWR	Power
PX	Press
R	Received as transmitted; are
RCD	Received
RCVR (RX)	Receiver
REF	Refer to; referring to; reference
RFI	Radio frequency interference
RIG	Station equipment
RPT	Repeat; I repeat
RTTY	Radioteletype
SASE	Self-addressed, stamped envelope
SED	Said
SIG	Signature; signal
SINE	Operator's personal initials or nickname
SKED	Schedule
SRI	Sorry
SVC	Service; prefix to service message
TFC	Traffic
TMW	Tomorrow
TNX-TKS	Thanks
TT	That
TU	Thank you
TVI	Television interference
TXT	Text
UR-URS	Your; you're; yours
VFO	Variable-frequency oscillator
VY	Very
WA	Word after
WB	Word before
WD-WDS	Word; words
WKD-WKG	Worked; working
WL	Well; will
WUD	Would
WX	Weather
XMTR (TX)	Transmitter
XTAL	Crystal
XYL (YF)	Wife
YL	Young lady
73	Best regards
88	Love and kisses

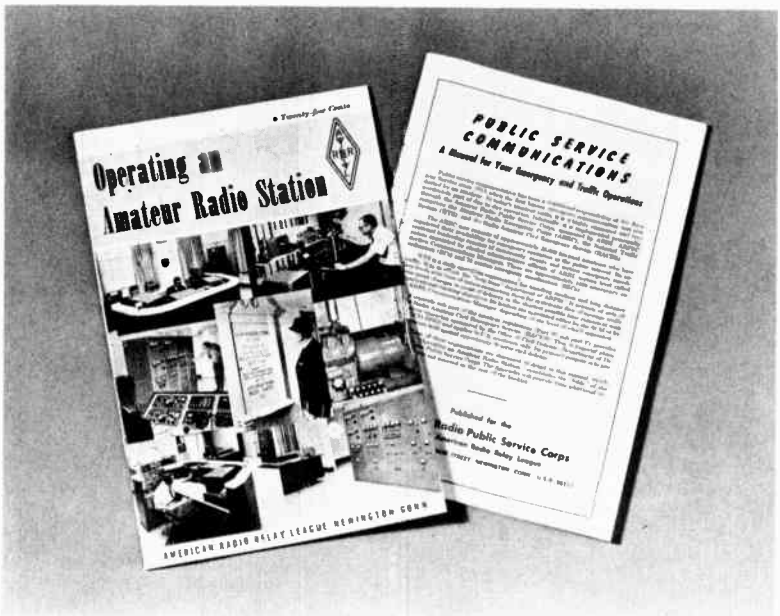

▲ *Operating an Amateur Radio Station* covers the details of practical amateur operating. In it you will find information on Operating Practices, Emergency Communication, ARRL Operating Activities and Awards, the ARRL Field Organization, Handling Messages, Network Organization, "Q" Signals and Abbreviations used in amateur operating, important extracts from the FCC Regulations, and other helpful material. It's a handy reference that will serve to answer many of the questions concerning operating that arise during your activities on the air.

▲ *Public Service Communications* is the "bible" of the Amateur Radio Public Service Corps. Within its pages are contained the fundamentals of operation of the Amateur Radio Emergency Corps (AREC), the National Traffic System (NTS), and the Radio Amateur Civil Emergency Service (RACES), the three "divisions" of ARPSC, including diagrams of how each is organized and how it operates. The role of the American Red Cross and FCC's regulations concerning amateur operation in emergencies also come in for some special attention.

The two publications described above may be obtained without charge by any *Handbook* reader. Either or both will be sent upon request.

AMERICAN RADIO RELAY LEAGUE
225 Main Street
Newington, Conn. 06111

Please send me, without charge, the following:

☐ **OPERATING AN AMATEUR RADIO STATION**
☐ **PUBLIC SERVICE COMMUNICATIONS**

Name .....
(Please Print)

Address .....

.....

Zip

Vacuum Tubes and Semiconductors

For the convenience of the designer, the receiving-type tubes listed in this chapter are grouped by filament voltages and construction types (glass, metal, miniature, etc.). For example, all miniature tubes are listed in Table I, all metal tubes are in Table II, and so on.

Transmitting tubes are divided into triodes and tetrodes-pentodes, then listed according to rated plate dissipation. This permits direct comparison of ratings of tubes in the same power classification.

For quick reference, all tubes are listed in numerical-alphabetical order in the index. Types having no table reference are either obsolete or of little use in amateur equipment. Base diagrams for these tubes are listed.

Tube Ratings

Vacuum tubes are designed to be operated within definite maximum (and minimum) ratings. These ratings are the maximum safe operating voltages and currents for the electrodes, based on inherent limiting factors such as permissible cathode temperature, emission, and power dissipation in electrodes.

In the transmitting-tube tables, maximum ratings for electrode voltage, current and dissipation are given separately from the typical operating conditions for the recommended classes of operation. In the receiving-tube tables, ratings and operating data are combined. Where only one set of operating conditions appears, the positive electrode voltages shown (plate, screen, etc.) are, in general, also the maximum rated voltages.

For certain air-cooled transmitting tubes, there are two sets of maximum values, one designated as CCS (Continuous Commercial Service) ratings, the other ICAS (Intermittent Commercial and Amateur Service) ratings. Continuous Commercial Service is defined as that type of service in which long tube life and reliability of performance under continuous operating conditions are the prime consideration. Intermittent Commercial and Amateur Service is defined to include the many applications where the transmitter design factors of minimum size, light weight, and maximum power output are more important than long tube life. ICAS ratings are considerably higher than CCS ratings. They permit the handling of greater power, and although such use involves some sacrifice in tube life, the period over which tubes give satisfactory performance in intermittent service can be extremely long.

The plate dissipation values given for transmitting tubes should not be exceeded during normal operation. In plate modulated amplifier applications, the maximum allowable carrier-condition plate dissipation is approximately 66 percent of the value listed and will rise to the maximum value under 100 percent sinusoidal modulation.

Typical Operating Conditions

The typical operating conditions given for transmitting tubes represent, in general, maximum ICAS ratings where such ratings have been given by the manufacturer. They do not represent the *only* possible method of operation of a particular tube type. Other values of plate voltage, plate current, etc., may be used so long as the maximum ratings for a particular voltage or current are not exceeded.

Detailed information and characteristic curves are available from tube and semiconductor manufacutrers, in books sold through radio dealers or direct from the factory.

Semiconductors

The semiconductor tablulation in this chapter is restricted to some of the more common diodes and transistors. The units listed were selected to represent those types that are useful for most amateur radio experimental applications. These diodes and transistors were chosen for their low cost and availability. Most of them can be obtained from the large mail-order houses or from the local manufacturer's distributor. Because there are thousands of diode and transistor types on today's market, this list is by no means complete.

INDEX TO TUBE TABLES

INDEX TO VACUUM-TUBE TYPES

Base-diagram section pages V5-V15. Classified data pages V16-V34.

Type	Page	Base
6S4	—	9AC
6S4A	V18	9AC
6S6GT	—	5AK
6S7	—	7R
6S8GT	V22	8CB
6SA7GT	V21	8R
6SB7Y	V21	8R
6SC7	V21	8S
6SD7GT	V22	8N
6SE7GT	—	8N
6SF5	V21	6AB
6SF7	V21	7AZ
6SG7	V21	8BK
6SH7	V21	8BK
6SH7L	—	8BK
6SJ7	V21	8N
6SJ7Y	V21	8N
6SK7	V21	8N
6SL7GT	V22	8BD
6SN7GTA	—	8BD
6SN7GTB	V22	8BD
6SQ7GT	V21	8Q
6SR7	V21	8Q
6SS7	—	8N
6ST7	—	8Q
6SU7GTY	—	8BD
6SV7	—	7AZ
6SZ7	—	8Q
6T4	V18	7DK
6T5	—	6R
6T6GM	—	6Z
6T7	—	7V
6T8	—	9E
6T8A	V18	9E
6T9	V23	12FM
6U3	—	9BM
6U4GT	V24	4CG
6U5	—	6R
6U6GT	—	7S
6U7G	—	7R
6U8	—	9AE
6U8A	V18	9AE
6V3	—	9BD
6V3A	—	9BD
6V4	V24	9M
6V5GT	—	6AO
6V6GTA	V21	7S
6V7G	—	7V
6V8	—	9AH
6W4GT	—	4CG
6W5G	—	6S
6W6GT	V22	7S
6W7G	—	7R
6X4/6063	V24	7CF
6X5GT	V24	6S
6X6G	—	7AL
6X8	—	9AK
6X8A	V18	9AK
6Y3G	—	4AC
6Y5	—	6J
6Y6G	—	7S
6Y6GA	V22	7S
6Y6GT	—	7S
6Y7G	—	8B
6Z3	V24	4G
6Z4	—	5D
6Z5	—	6K
6Z7G	—	8B
6ZY5G	—	6S
7A4	—	5AC
7A5	—	6AA
7A6	—	7AJ
7A7	—	8V
7A8	—	8U
7AB7	—	8BO
7AD7	—	8V
7AF7	—	8AC
7AG7	—	8V
7AH7	—	8V
7AJ7	—	8V
7AK7	—	8V
7B4	—	5AC
7B5	—	6AE
7B6	—	8W
7B7	—	8V
7B8	—	8X
7C4	—	4AH
7C5	—	6AA
7C6	—	8W
7C7	—	8V
7D7	—	8AR
7E5	V23	8BN
7E6	—	8W
7E7	—	8AE
7EP4	—	11N
7EV6	—	7AC
7EY6	—	7AC
7F7	—	8AC
7F8	—	8BW
7G7	—	8V
7G8	—	8BY
7GP4	—	14G
7H7	—	8V
7J7	—	8BL
7JP1-4-7	—	14R
7K7	—	8BF
7L7	—	8V
7N7	—	8AC
7Q7	—	8AL
7R7	—	8AE
7S7	—	8BL
7T7	—	8V
7V7	—	8V
7VP1	—	14R
7W7	—	8BJ
7X6	—	7AJ
7X7	—	8BZ
7Y4	—	5AB
7Z4	—	5AB
8BP4	—	14G
9BM5	—	7BZ
9BW6	—	9AM
9NP1	—	6BN
10	—	4D
10EB8	—	9DX
10GP4	—	14G
10HP4	—	14G
10Y	—	4D
11/12	—	4F
12A4	—	9AG
12A5	—	7F
12A6	—	7S
12A7	—	7K
12A8GT	—	8A
12AB5	V18	9EU
12AB6	—	7CC
12AC6	V18	7BK
12AD6	V18	7CH
12AD7	—	9A
12AE6A	V19	7BT
12AE7	V19	9A
12AF6	V19	7BK
12AG6	—	7CH
12AH7GT	—	8BE

Type	Page	Base
12AH8	—	9BP
12AJ6	V19	7BT
12AL5	—	6BT
12AL8	V19	9GS
12AQ5	V19	7BZ
12AT6	—	7BT
12AT7	V19	9A
12AU6	—	7BK
12AU7A	V25	9A
12AU7A	V19	9A
12AV5GA	—	6CK
12AV6	—	7BT
12AV7	V19	9A
12AW6	V19	7CM
12AW7	—	7CM
12AX4GT	—	4CG
12AX4GTA	—	4CG
12AX7A	V19	9A
12AY7	V19	9A
12AZ7A	V19	9A
12B4	—	9AG
12B4A	V19	9AG
12B6M	—	6Y
12B7	—	8V
12B7ML	—	8V
12B8GT	—	8T
12BA6	—	7BK
12BA7	—	8CT
12BD6	—	7BK
12BE6	—	7CH
12BF6	—	7BT
12BH7	—	9A
12BH7A	V19	9A
12BK5	—	9BQ
12BK6	—	7BT
12BL6	V19	7BK
12BN6	—	7DF
12BQ6GA	—	6AM
12BQ6GT	—	6AM
12BQ6GTB	—	6AM
12BR7A	V19	9CF
12BT6	—	7BT
12BU6	—	7BT
12BW4	—	9DJ
12BV7	V19	9BF
12BX6	V19	9AQ
12BY7	—	9BF
12BY7A	V19	9BF
12BZ6	—	7CM
12BZ7	V19	9A
12C5	—	7CV
12C8	—	8E
12CA5	—	7CV
12CM6	—	9CK
12CN5	V19	7CV
12CR6	—	7EA
12CS5	—	9CK
12CS6	—	7CH
12CT8	V19	9DA
12CU5	—	7CV
12CU6	—	6AM
12CX6	V19	7BK
12DB5	—	9GR
12DE8	V19	Fig. 81
12DF5	V24	9BS
12DF7	—	9A
12DK7	V19	9HZ
12DL8	V19	9HR
12DM7	V19	9A
12DQ6A	—	6AM
12DQ7	V19	9BF
12DS7	V19	9JU
12DT5	—	9HN
12DT6	V19	7EN
12DT7	V19	9A
12DT8	—	9DE
12DU7	V19	9JX
12DV7	V19	9JY
12DV8	V19	9HR
12DW5	—	9CK
12DW7	V19	9A
12DW8	V19	9JC
12DY8	V19	9JD
12DZ6	V19	7BK
12E5GT	—	6Q
12EA6	V19	7BK
12EC8	V19	9FA
12ED5	V19	7CV
12EF6	—	7S
12EG6	V19	7CH
12EK6	V19	7BK
12EL5	V20	7FB
12EM6	V20	9HV
12EN6	—	7S
12F5GT	—	5M
12F8	V20	9FH
12FK6	V20	7BT
12FM6	V20	7BT
12FP7	—	14E
12FQ8	V20	9KT
12FR8	V20	9KU
12FT6	V20	7BT
12FX5	V20	7CV
12FX8A	V20	9KY
12G4	—	6HG
12G7G	—	7V
12G8	—	9CZ
12GA6	V20	7CH
12GE5	—	12BJ
12GJ5	V23	9NM
12GW6	—	6AM
12GN7	—	9BF
12GP7	—	14S
12H4	V20	7DW
12H6	—	7Q
12HP7	—	11J
12J5GT	—	6Q
12J7GT	—	7R
12J8	V20	9GC
12K5	V20	7EK
12K7GT	—	7R
12K8	—	8K
12L6GT	—	7S
12L8GT	—	8BU
12Q7GT	—	7V
12R5	V20	7CV
12S8GT	—	8CB
12SA7	—	8R
12SC7	—	8S
12SF5	—	6AB
12SF7	—	7AZ
12SG7	—	8BK
12SH7	—	8BK
12SJ7	—	8N
12SK7	—	8N
12SL7GT	—	8BD
12SN7GT	—	8BD
12SN7GTA	—	8BD
12SQ7	—	8Q
12SR7	—	8Q
12SW7	—	8Q
12SX7	—	8BD
12SY7	—	8R
12U7	V20	9A

Type	Page	Base
12V6GT	—	7S
12W6GT	—	7S
12X4	V24	5HS
12Z3	—	4G
12Z5	—	7L
14A4	—	5AC
14A5	—	6AA
14A7	—	8V
14AF7	—	8AC
14AP1-4	—	12A
14B6	—	8W
14B8	—	8X
14C5	—	6AA
14C7	—	8V
14E6	—	8W
14E7	—	8AE
14F7	—	8AC
14F8	—	8BW
14H7	—	8V
14J7	—	8BL
14N7	—	8AC
14Q7	—	8AL
14R7	—	8AE
14S7	—	8BL
14V7	—	8V
14W7	—	8BJ
14X7	—	8BZ
14Y4	—	5AB
14Z3	—	4G
15	—	5F
15A6	—	9AR
15E	—	Fig. 51
16A5	—	9BL
17	—	3G
17Z3	—	9CB
18	—	6B
18FW6A	V20	7CC
18FX6A	V20	7CH
18FY6A	V20	7BT
19	—	6C
19CL8A	—	9FX
19X3	—	9BM
19Y3	—	9BM
20	—	4D
20AP1-4	—	12A
20J8GT	—	8H
21A6	—	9AS
21A7	—	8AR
21EX6	—	5BT
22	—	4K
24-A	—	5E
24-G	—	2D
24XH	—	Fig. 1
25A6	—	7S
25A7GT	—	8F
25AC5GT	—	6Q
25AV5GA	—	6CK
25AV5GT	—	6CK
25AX4GT	—	4CG
25B5	—	6D
25B6G	—	7S
25B8GT	—	8T
25BK5	—	9BQ
25BQ6GA	—	6AM
25BQ6GT	—	6AM
25BQ6GTB	—	6AM
25C5	—	7CV
25C6G	—	7AC
25C6GA	—	7S
25CA5	—	7CV
25CD6G	—	5BT
25CD6GA	—	5BT
25CD6GB	—	5BT
25CU6	—	6AM
25D8GT	—	8AF
25DN6	—	5BT
25DQ6	—	6AM
25EC6	—	5BT
25EH5	—	7CV
25F5	V20	7CV
25L6GT	—	7S
25N6G	—	7W
25S	—	6M
25SA7GT	—	8AD
25T	—	3G
25W4GT	—	4CG
25W6GT	—	7S
25X6GT	—	7Q
25Y4GT	—	5AA
25Y5	—	6E
25Z3	—	4G
25Z4	—	5AA
25Z5	V24	6E
25Z6	—	7Q
26	—	4D
26A6	—	7BK
26A7GT	—	8BU
26BK6	—	7BT
26C6	—	7BT
26CG6	—	7BK
26D6	—	7CH
26Z5W	—	9BS
27	—	5A
28Z5	—	5AB
30	—	4D
31	—	4D
32	—	4K
32ET5	V20	7CV
32L7GT	—	8Z
33	—	5K
34	—	4M
34GD5	V20	7CV
35/51	—	5E
35A5	—	6AA
35B5	V20	7BZ
35C5	—	7CV
35L6GT	—	7S
35T	—	3G
35TG	—	2D
35W4	V24	5HQ
35Y4	—	5AL
35Z3	—	4Z
35Z4GT	V24	5AA
35Z5G	V24	6AD
35Z6G	—	7Q
36	—	5F
36AM3	V24	5HQ
37	—	5A
38	—	5F
39/44	—	5F
40	—	4D
40Z5GT	—	6AD
41	—	6B
42	—	6B
43	—	6B
45	—	4D
45Z3	—	5AM
45Z5GT	—	6AD
46	—	5C
47	—	5B
48	—	6A
49	—	5C
50	—	4D
50A5	—	6AA

Type	Page	Base
50AX6G	—	7Q
50B5	V20	7BZ
50BK5	—	9BQ
50C5	—	7CV
50C6G	—	7S
50C6GA	—	7S
50DC4	V24	5BQ
50FK5	V20	7CV
50L6GT	—	7S
50T	—	2D
50X6	—	7AJ
50Y6GT	V24	7Q
50Y7GT	—	8AN
50Z6G	—	7Q
50Z7G	—	8AN
51	—	5E
52	—	5C
53	—	7B
53A	—	Fig. 53
55	—	6G
56	—	5A
56AS	—	5A
57	—	6F
57AS	—	6F
58	—	6F
58AS	—	6F
59	—	7A
70A7GT	—	8AB
70L7GT	—	8AA
71-A	—	4D
72	—	4P
73	—	4Y
75	—	6G
75TH	—	2D
75TL	—	2D
76	—	5A
77	—	6F
78	—	6F
79	—	6H
80	V24	4C
81	—	4B
82	—	4C
83	V24	4C
83-V	V24	4AD
84/6Z4	—	5D
85	—	6G
85AS	—	6G
89	—	6F
90C1	V23	5BO
99	—	4D
100TH	V25	2D
100TL	V25	2D
111H	—	2D
112-A	—	4D
117L7GT	—	8AO
117M7GT	—	8AO
117N7GT	V24	8AV
117P7GT	—	8AV
117Z3	V24	4CB
117Z4GT	—	5AA
117Z6GT	—	7Q
128AS	—	5A
150T	—	2N
152TH	—	4BC
152TL	—	4BC
175A	V29	Fig. 78
182-B	—	4D
183	—	4D
203-A	—	4E
203-H	—	3N
204-A	—	Fig. 39
205-D	—	4D
211	—	4E
212-E	—	Fig. 43
217-A	—	4AC
217-C	—	4AT
227-A	—	Fig. 53
241-B	—	Fig. 44
242-A	—	4E
242-B	—	4E
242-C	—	4E
249-B	—	Fig. 29
250TH	V25	2N
250TL	V25	2N
254	—	2N
254-A	—	Fig. 57
254-B	—	Fig. 57
261-A	—	4E
270-A	—	Fig. 39
276-A	—	4E
282-A	—	Fig. 57
284-B	—	3N
284-D	—	4E
295-A	—	4E
300T	—	2N
303-A	—	4E
304-A	—	Fig. 39
304-B	—	2D
304TH	V26	4BC
304TL	V26	4BC
305-A	—	Fig. 59
306-A	—	Fig. 63
307-A	—	Fig. 61
308-B	—	Fig. 43
310	—	4D
311	—	4E
311CH	—	Fig. 32
312-A	—	Fig. 68
312-E	—	Fig. 44
327-A	—	Fig. 50
327-B	—	Fig. 50
342-B	—	4F
356-A	—	Fig. 55
361-A	—	4E
376-A	—	4E
408A	—	7BD
417-A	V20	9V
482-B	—	4D
483	—	4D
485	—	5A
527	—	Fig. 53
559	—	Fig. 10
572	V25	3G
575-A	—	4AT
592	—	Fig. 28
705-A	—	Fig. 45
717-A	—	8BK
756	—	4D
800	—	2D
801A/801	—	4D
802	—	6BM
803	V28	5C
804	—	Fig. 61
805	—	3N
806	—	2N
807	V27	5AW
807W	V27	5AW
808	—	2D
809	—	3G
810	V25	2N
811	—	3G
811A	V25	3G
812	—	3G
812A	V25	3G

Type	Page	Base
812H	—	3G
813	V28	5BA
814	V27	Fig. 64
815	V27	8BY
816	V24	4P
822	—	3N
822S	—	2N
826	—	7BO
828	—	5JP
829	—	7BP
829A	—	7BP
829B	V27	7BP
830	—	4D
830B	—	3G
831	—	Fig. 40
832	—	7BP
832A	V27	7BP
833A	V26	Fig. 41
834	—	2D
835	—	4E
836	V24	4P
837	—	6BM
838	—	4E
840	—	5J
841	—	4D
841A	—	3G
841SW	—	3G
843	—	5A
844	—	5AW
849	—	Fig. 39
850	—	Fig. 47
852	—	2D
860	—	Fig. 58
861	—	Fig. 42
864	—	4D
865	—	Fig. 57
866	—	4P
866A-AX	V24	4P
866B	V24	4P
866jr	V24	4B
871	—	4P
872A/872	V24	4AT
874	—	4S
878	—	4P
879	—	4AB
884	V23	6Q
885	—	5A
902A	—	8CD
906P1-11	—	7AN
908A	—	7CE
909	—	5BP
910	—	7AN
911	—	7AN
914A	—	6BF
930B	—	3G
938	—	4E
950	—	5K
951	—	4M
954	V23	5BB
955	V23	5BC
955	—	5BC
956	V23	5BB
957	—	5BD
958	—	5BD
958A	V23	5BD
958A	—	5BD
959	V23	5BE
967	V23	3G
975A	—	4AT
1003	—	4R
1005	—	5AQ
1006	—	4C
1201	V23	8BN
1203	—	4AH
1204	—	8BO
1206	—	8BV
1218A	V20	7DK
1221	—	6F
1223	—	7R
1229	—	4K
1230	—	4D
1231	—	8V
1232	—	8V
1265	V23	4AJ
1266	V23	4AJ
1267	V23	4V
1273	—	8V
1274	—	6S
1275	—	4C
1276	—	4D
1280	—	8V
1284	—	8V
1291	—	7BE
1293	—	4AA
1294	—	4AH
1299	—	6BB
1602	—	4D
1603	—	6F
1608	—	4D
1609	—	5B
1610	—	Fig. 62
1611	—	7S
1612	—	7T
1613	—	7S
1614	V27	7AC
1616	—	4P
1619	—	Fig. 74
1620	V21	7R
1621	—	7S
1622	—	7AC
1623	V25	3G
1624	—	Fig. 66
1625	V27	5AZ
1626	—	6Q
1627	—	2N
1628	—	Fig. 54
1629	—	6RA
1631	—	7AC
1632	—	7S
1633	—	8BD
1634	—	8S
1635	V22	8B
1641	—	Fig. 52
1642	—	7BH
1644	—	Fig. 4
1654	—	2Z
1802P1-11	—	11A
1805P1-4	—	11A
1806P1	—	11N
1851	—	7R
1852	V21	8N
1853	—	8N
2002	—	Fig. 1
2005	—	Fig. 1
2050	V23	8BA
2051	—	8BA
2523N/128A	—	5A
4604	V27	7CL
4652	V27	Fig. 51
5514	—	4BO
5516	—	7CL
5517	—	5BU
5556	—	4D
5562	—	Fig. 30

Type	Page	Base
5590	—	7BD
5591	—	7BD
5608	—	7BD
5608A	—	7B
5610	—	6CG
5618	—	7CU
5651	V23	5BO
5654	—	7BD
5656	—	9F
5662	V23	Fig. 79
5663	—	6CE
5670	—	8CJ
5675	V25	Fig. 21
5679	—	7CX
5686	V20	9G
5687	V20	9H
5690	—	Fig. 38
5691	—	8BD
5692	—	8BD
5693	V21	8N
5694	—	8CS
5696	V23	7BN
5722	V20	5CB
5725	—	7CM
5726	—	6BT
5727	V23	7BN
5731	—	5BC
5749	—	7BK
5750	—	7CH
5751	—	9A
5755	—	9J
5763	V26	9K
5765	—	Fig. 21
5766	See 2C37	
5767	See 2C37	
5768	—	Fig. 21
5794	—	Fig. 21
5812	—	7CQ
5814	—	9A
5823	V23	4CK
5824	—	7S
5825	—	4P
5830	—	6S
5842	V20	9V
5844	—	7BF
5845	—	5CA
5847	—	9X
5852	—	6S
5857	—	9AB
5866	V25	Fig. 3
5867	—	Fig. 3
5871	—	7AC
5876	—	Fig. 21
5879	V20	9AD
5881	—	7AC
5890	—	12J
5893	V25	Fig. 21
5894A	V27	Fig. 7
5910	—	6AR
5915	—	7CH
5920	—	7BF
5933	V27	5AW
5961	—	8K
5962	V23	2AG
5963	—	9A
5964	—	7BF
5965	—	9A
5993	—	Fig. 35
5998	V23	8BD
6005	—	7BZ
6023	—	9CD
6026	V25	Fig. 16
6028	—	7BD
6045	—	7BF
6046	—	7AC
6057	—	9A
6058	—	6BT
6059	—	9BC
6060	—	9A
6061	—	9AM
6062	—	9K
6063	V24	7CF
6064	—	7DB
6065	—	7DB
6066	—	7BT
6067	—	9A
6072	—	9A
6073	—	5BO
6074	—	5BO
6080	—	8BD
6082	—	8BD
6083	—	Fig. 5
6084	—	9BJ
6085	—	9A
6086	—	9BK
6087	—	5L
6101	—	7BF
6132	—	9BA
6135	—	6BG
6136	—	7BK
6137	—	8N
6140	—	9BY
6141	—	9BZ
6146	V27	7CK
6146A	V27	7CK
6146B	V27	7CK
6155	V28	5BK
6156	V28	5BK
6157	—	Fig. 36
6158	—	9A
6159	V27	7CK
6173	V23	Fig. 34
6186	—	7BD
6197	—	9BV
6201	—	9A
6211	—	9A
6216	—	Fig. 37
6218	—	9CG
6227	—	9BA
6252	V27	Fig. 7
6263	V25	—
6264	V25	—
6265	—	7CM
6287	—	9CT
6308	V23	8EX
6336A	V23	8BD
6350	—	9CZ
6354	V23	Fig. 12
6360	V27	Fig. 13
6374	—	9BW
6386	V20	8CJ
6417	V26	9K
6443	—	9BW
6485	—	7BK
6524	V27	Fig. 76
6550	V22	7S
6627	—	5BO
6660	—	7CC
6661	—	7CM
6662	—	7CM
6663	—	6BT
6664	—	5CE
6669	—	7BZ
6676	—	7CM

Type	Page	Base
6677	—	9BV
6678	—	9AE
6679	—	9A
6680	—	9A
6681	—	9A
6816	V28	Fig. 77
6829	—	9A
6850	V27	Fig. 76
6883	V27	7CK
6884	V28	Fig. 77
6887	V20	6BT
6893	V27	7CK
6897	—	—
6907	—	Fig. 7
6939	V26	Fig. 13
6973	V20	9EU
7000	—	7R
7025	—	9A
7027A	V22	8HY
7034	V28	Fig. 75
7035	V28	Fig. 75
7054	—	9BF
7055	—	6BT
7056	—	6CM
7057	—	9AJ
7058	—	9A
7059	—	9AE
7060	—	9DX
7061	—	9EU
7077	V23	—
7094	V28	Fig. 82
7137	—	7BQ
7167	—	7EW
7189A	V20	9CV
7247	—	9A
7258	V20	9DA
7270	V28	Fig. 84
7271	V28	Fig. 84
7308	—	9DE
7360	V23	9KS
7408	—	7AC
7543	—	7BK
7551	V26	9LK
7558	V26	9LK
7581A	—	7AC
7586	V20	12AQ
7587	V20	12AS
7591	V22	8KQ
7695	V23	9FX
7700	—	6F
7701	—	9MS
7717	—	7EW
7854	V27	Fig. 7
7868	V23	9NZ
7895	V20	12AQ
7905	V26	9PB
7984	V27	12EU
8000	—	2N
8001	V27	7BM
8003	—	3N
8005	—	3G
8008	—	Fig. 8
8012	—	Fig. 54
8013-A	—	4P
8016	—	3C
8020	—	4P
8025	—	4AQ
8032	V27	7CK
8042	V27	Fig. 51
8056	V20	12AQ
8058	V20	12CT
8072	V29	Fig. 85
8117	V27	Fig. 7
8121	V28	Fig. 86
8122	V28	Fig. 85
8163	V26	Fig. 3
8166/ 4-1000A	V28	—
8203	V26	12AQ
8295/172	V29	—
8298A	V27	7CK
8334	—	7DK
8393	V20	12AQ
8458	V27	Fig. 13
8627	V25	12CT
8628	V20	12AQ
8646	V28	—
8677	V20	12CT
8808	V25	Fig. 15
8873	V25	—
8874	V26	—
8875	V26	—
8877	V26	—
9001	V20	7BD
9002	V20	7BS
9002	—	7BS
9003	V20	7BD
9004	—	4BJ
9005	—	5BG
9006	V20	6BH
AT-340	—	5BK
AX9900	V25	Fig. 3
AX9901	—	Fig. 3
AX9903	V27	Fig. 7
AX9905	—	Fig. 2
AX9909	—	Fig. 5
AX9910	V27	Fig. 7
BA	—	4J
BH	—	4J
BR	—	4H
CE220	—	4P
CK1005	—	5AQ
CK1006	—	4C
CK1007	—	Fig. 73
DR3B27	—	4P
DR123C	—	Fig. 15
DR200	—	2N
ECC81	—	9A
ECC82	—	9A
ECC83	—	9A
EF50	—	9C
F123A	—	Fig. 15
F127A	—	Fig. 15
G84	V24	4B
GL2C39A	V25	—
GL2C39B	V25	—
GL2C44	—	Fig. 9
GL5C24	—	Fig. 15
GL146	—	Fig. 56
GL152	—	Fig. 56
GL159	—	Fig. 56
GL169	—	Fig. 56
GL446A	—	Fig. 11
GL446B	—	Fig. 11
GL464A	—	Fig. 9
GL559	—	Fig. 10
GL5442	—	—
GL6463	—	9CZ
GL8012A	—	Fig. 54
HD203A	—	3N
HF50	—	2D
HF75	—	2D
HF100	—	2D
HF120	—	4F

Type	Page	Base
HF140	—	4F
HF175	—	Fig. 46
HF200	—	2N
HF201A	—	Fig. 15
HF250	—	2N
HF300	—	2N
HK24	—	3G
HK54	—	2D
HK57	—	Fig. 33
HK154	—	2D
HK158	—	2D
HK252L	—	4BC
HK253	—	4AT
HK254	—	2N
HK257	—	7BM
HK257B	—	7BM
HK304L	—	4BC
HK354	—	2N
HK354C	—	2N
HK354D	—	2N
HK354E	—	2N
HK354F	—	2N
HK454H	—	2N
HK454L	—	2N
HK654	—	2N
HV12	—	3N
HV18	—	2N
HV27	—	3N
HY6J5GTX	—	6Q
HY6L6GTX	—	7AC
HY24	—	4D
HY25	—	3G
HY30Z	—	4BO
HY31Z	—	Fig. 60
HY40	—	3G
HY40Z	—	3G
HY51A	—	3G
HY51B	—	3G
HY51Z	—	4BO
HY57	—	3G
HY60	—	5AW
HY61	—	5AW
HY63	—	Fig. 72
HY65	—	Fig. 72
HY67	—	Fig. 65
HY69	—	Fig. 64
HY75	—	2T
HY75A	—	2T
HY114B	—	2T
HY615	—	Fig. 71
HY801A	—	4D
HY866jr	—	4P
HY1231Z	—	Fig. 60
HY1269	—	Fig. 65
HYE1148	—	Fig. 71
KT66	—	7AC
KY21	V23	—
NU2C35	—	Fig. 23
PE340	—	5BK
PL172/8295	V28	—
PL177A	V27	Fig. 14
PL6549	—	Fig. 14
PL6569	V26	Fig. 3
PL6580	V26	5BK
RK10	—	4D
RK11	—	3G
RK12	—	3G
RK15	—	4D
RK16	—	5A
RK17	—	5F
RK18	—	3G
RK19	—	4AT
RK20	—	Fig. 61
RK20A	—	Fig. 61
RK21	—	4P
RK22	—	Fig. 52
RK23	—	6BM
RK24	—	4D
RK25	—	6BM
RK25H	—	6BM
RK28	—	5J
RK28A	—	5J
RK30	—	2D
RK31	—	3G
RK32	—	2D
RK33	—	Fig. 69
RK34	—	Fig. 70
RK35	—	2D
RK36	—	2D
RK37	—	2D
RK38	—	2D
RK39	—	5AW
RK41	—	5AW
RK42	—	4D
RK43	—	6C
RK44	—	6BM
RK46	—	Fig. 61
RK47	—	Fig. 64
RK48	—	Fig. 64
RK48A	—	Fig. 64
RK49	—	6A
RK51	—	3G
RK52	—	3G
RK56	—	5AW
RK57	—	3N
RK58	—	3N
RK59	—	Fig. 60
RK61	V23	—
RK62	—	4D
RK63	—	2N
RK63A	—	2N
RK64	—	5AW
RK65	—	Fig. 48
RK66	—	Fig. 61
RK75	—	Fig. 61
RK100	—	Fig. 67
RK705A	—	Fig. 45
RK866	—	4P
T20	—	3G
T21	—	6A
T40	—	3G
T55	—	3G
T60	—	2D
T100	—	2D
T125	—	2N
T160L	V25	3G
T200	—	2N
T300	—	—
T814	—	3N
T822	—	3N
TB35	—	Fig. 30
TUF20	—	2T
TW75	—	2D
TW150	—	2N
TZ20	—	3G
TZ40	—	3G
UE100	—	2D
UE468	—	Fig. 32
UH35	—	3G
UH50	—	2D
UH51	—	2D
V70	—	3N
V70A	—	3N
V70B	—	3G

Type	Page	Base
V70C	—	3G
V70D	—	3G
VR75	V23	4AJ
VR90	V23	4AJ
VR105	V23	4AJ
VR150	V23	4AJ
VT52	—	4D
VT127A	—	Fig. 53
WE304A	—	2D
X6030	—	Fig. 2
XXB	—	Fig. 6
XXD	—	8AC
XXL	—	5AC
XXFM	—	8BZ
ZB60	—	2D
ZB120	—	4E

SEMICONDUCTORS

Type	Page
1N21B	V29
1N21E	V29
1N21F	V29
1N23C	V29
1N23E	V29
1N34A	V29
1N35	V29
1N52A	V29
1N60	V29
1N64	V29
1N64A	V29
1N82A	V29
1N94	V29
1N270	V29
1N634	V29
1N748	V29
1N751	V29
1N753	V29
1N830A	V29
1N914	V29
1N958	V29
1N960	V29
1N963	V29
1N965	V29
1N967	V29
1N970	V29
1N972	V29
1N975	V29
1N977	V29
1N980	V29
1N982	V29
1N985	V29
1N989	V29
1N992	V29
1N1612	V29
1N1613	V29
1N2970	V29
1N2973	V29
1N2976	V29
1N2979	V29
1N2982	V29
1N2986	V29
1N2989	V29
1N2992	V29
1N2996	V29
1N3000	V29
1N3005	V30
1N3011	V30
1N3015	V30
1N3193	V30
1N3195	V30
1N3256	V30
1N3305	V30
1N3308	V30
1N3311	V30
1N3314	V30
1N3317	V30
1N3321	V30
1N3324	V30
1N3327	V30
1N3331	V30
1N3335	V30
1N3337	V30
1N3340	V30
1N3346	V30
1N3350	V30
1N3563	V30
1N4370	V29
1N4372	V29
1N4728	V29
1N4735	V29
1N4739	V29
1N4742	V29
1N4744	V29
1N4746	V29
1N4749	V29
1N4751	V29
1N4754	V29
1N4757	V29
1N4759	V29
1N4761	V29
1N4764	V29
1N4822	V30
1N4885	V30
1N5054	V30
2N706A	V30
2N1179	V30
2N1491	V31
2N1632	V30
2N2102	V31
2N2157	V31
2N2270	V31
2N2631	V31
2N2869	V31
2N2876	V31
2N2925	V30
2N3119	V31
2N3391A	V30
2N3512	V31
2N3553	V31
2N3583	V31
2N3632	V31
2N3663	V30
2N3733	V31
2N3866	V31
2N3924	V31
2N3948	V31
2N4012	V31
2N4037	V31
2N4124	V30
2N4126	V30
2N4396	V31
2N4401	V30
2N4410	V30
2N4416	V31
2N4417	V31
2N4427	V31
2N4957	V30
2N4958	V30
2N4959	V30

Type	Page
2N5016	V31
2N5031	V30
2N5032	V30
2N5070	V31
2N5071	V31
2N5087	V30
2N5088	V30
2N5089	V30
2N5090	V30
2N5179	V30
2N5221	V30
2N5222	V30
2N5457	V32
2N5458	V32
2N5459	V32
2N5460	V31
2N5461	V31
2N5462	V31
2N5463	V31
2N5464	V31
2N5465	V31
2N5470	V31
2N5484	V32
2N5485	V32
2N5635	V31
2N5636	V31
2N5637	V31
2N5641	V31
2N5642	V31
2N5643	V31
2N5668	V31
2N5669	V32
2N5670	V32
2N5824	V31
2N5829	V30
2N5913	V31
2N5914	V31
2N5915	V31
2N5919	V31
2N5921	V31
2N5941	V31
2N5942	V31
2N5944	V31
2N5945	V31
2N5946	V31
2N5995	V31
2N5996	V31
2N6136	V31
2N40675	V31
3N128	V32
3N140	V32
3N141	V32
3N200	V32
E300	V32
MA-4060A	V31
MA-4062D	V29
MBD101	V29
MBD501	V29
MBD701	V29
MFE3001	V32
MFE3006	V32
MFE3007	V32
MFE3008	V32
MJ480	V31
MM1549	V31
MM1550	V31
MM1551	V31
MMD6050	V29
MMD6100	V29
MMD6150	V29
MMD7000	V29
MMD7001	V29
MMT3823	V32
MPF10	V31
MPF102	V32
MPF103	V32
MPF104	V32
MPF105	V32
MPF106	V32
MPF107	V32
MPF120	V32
MPF121	V32
MPF122	V32
MPN3202	V29
MPN3208	V29
MPN3209	V29
MPS6514	V32
MPS918	V30
MPS3563	V30
MPS3693	V30
MPS3694	V30
MPS3706	V30
MPS6514	V30
MPS6530	V30
MPS6534	V30
MPS6543	V30
MPS6569	V30
MPSA10	V30
MPSA12	V30
MPSU01	V31
MPSU02	V31
MPSU51	V31
MPSU52	V31
MV1620	V29
MV1628	V29
MV1636	V29
MV1644	V29
MV1650	V29
TI848	V30
TI854	V30
TIXM10	V30
Z4XL6.2	V30
Z4XL9.1	V30
Z4XL12	V30
Z4XL14	V30
Z4XL16	V30
Z4XL18	V30
Z4XL20	V30
Z4XL22	V30
10B1	V30
10C10	V30
40081	V31
40082	V31
40231	V30
40235	V30
40280	V31
40282	V31
40290	V31
40291	V31
40292	V31
40310	V31
40312	V31
40349V2	V31
40405	V31
40424	V31
40600	V32
40601	V32
40602	V32
40603	V32
40604	V32
40673	V32
40675	V31

E.I.A. VACUUM-TUBE BASE DIAGRAMS

Socket connections correspond to the base designations given in the column headed "Base" in the classified tube-data tables. Bottom views are shown throughout. Terminal designations are as follows:

A = Anode
B = Beam
BP = Bayonet Pin
BS = Base Sleeve
C = Ext. Coating
CL = Collector
D = Deflecting Plate
F = Filament
FE = Focus Elect.
G = Grid
H = Heater
IC = Internal Con.
IS = Internal Shield
K = Cathode
NC = No Connection
P = Plate (Anode)
P_1 = Starter-Anode
Par = Beam Plates
RC = Ray-Control Eelectrode
Ref = Reflector
S = Shell
TA = Target
U = Unit
• = Gas-Type Tube

Alphabetical subscripts D, P, T and HX indicate, respectively, diode unit, pentode unit, triode unit or hexode unit in multi-unit types. Subscript CT indicates filament or heater tap.

Generally when the No. 1 pin of a metal-type tube in Table II, with the exception of all triodes, is shown connected to the shell, the No. 1 pin in the glass (G or GT) equivalent is connected to an internal shield.

* On 12AQ, 12AS and 12CT: index = large lug; • = pin cut off

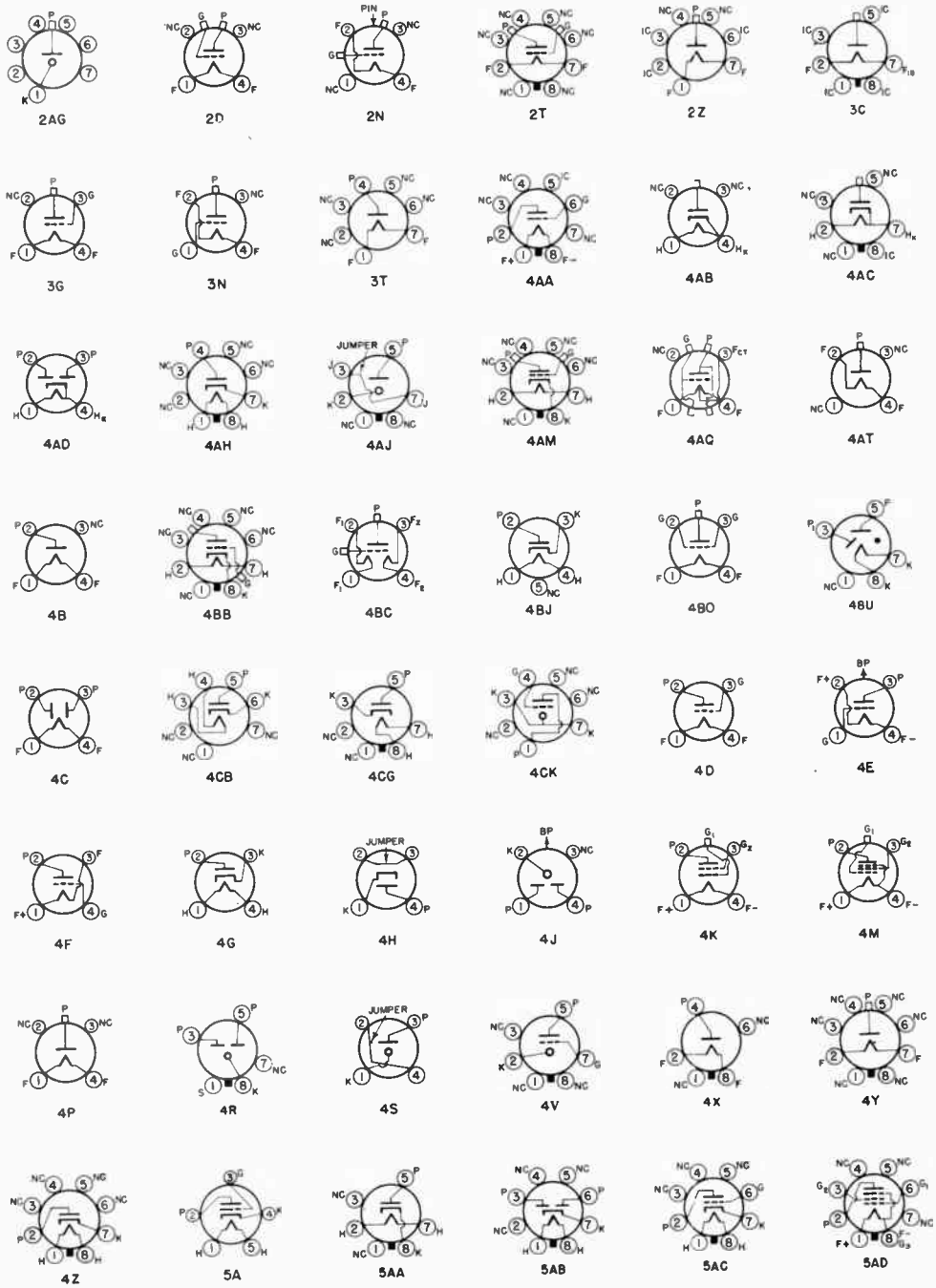

TUBE BASE DIAGRAMS

Bottom views are shown. Terminal designations on sockets are given on page V5.

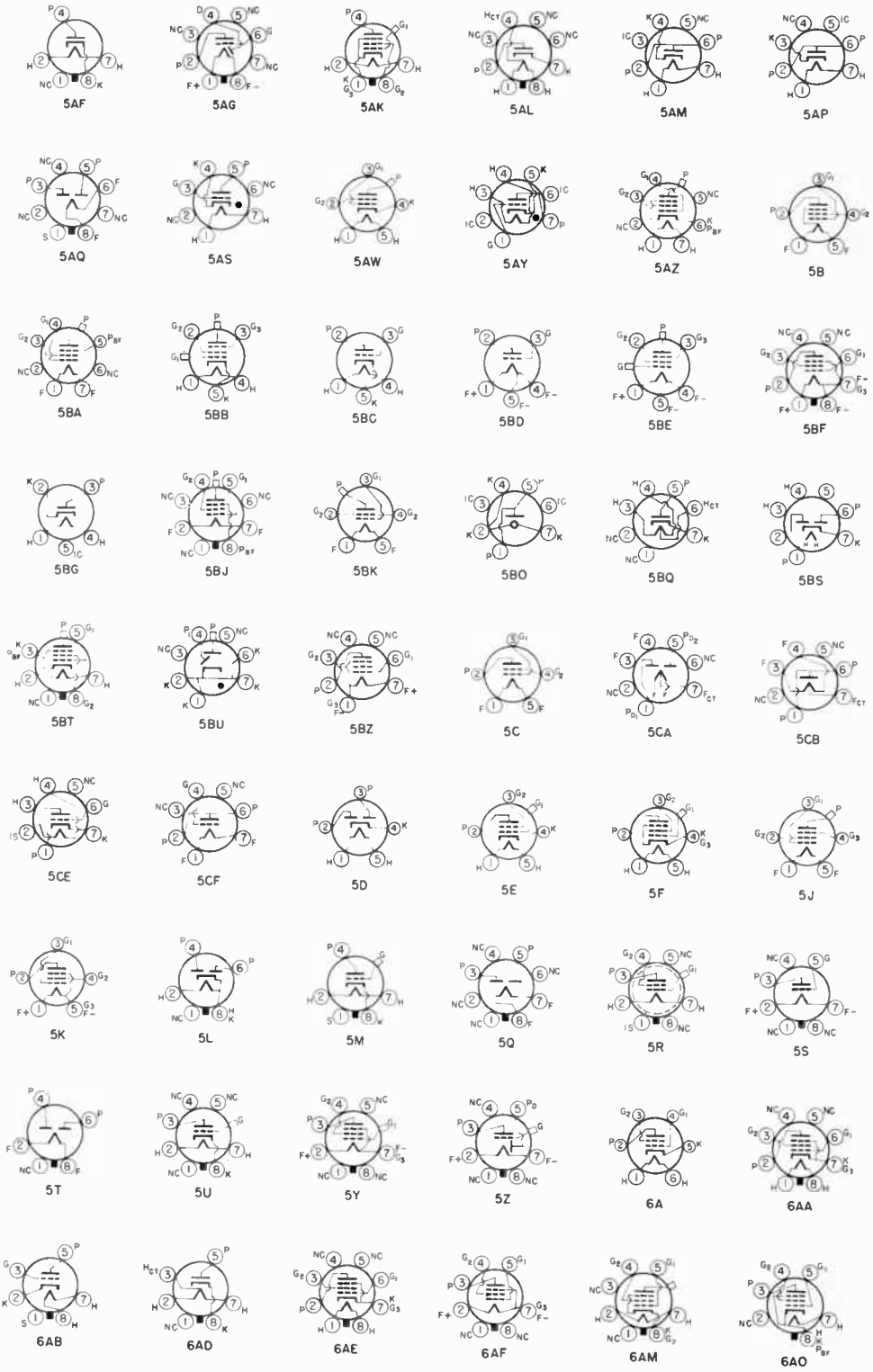

TUBE BASE DIAGRAMS

Bottom views are shown. Terminal designations on sockets are given on page V5.

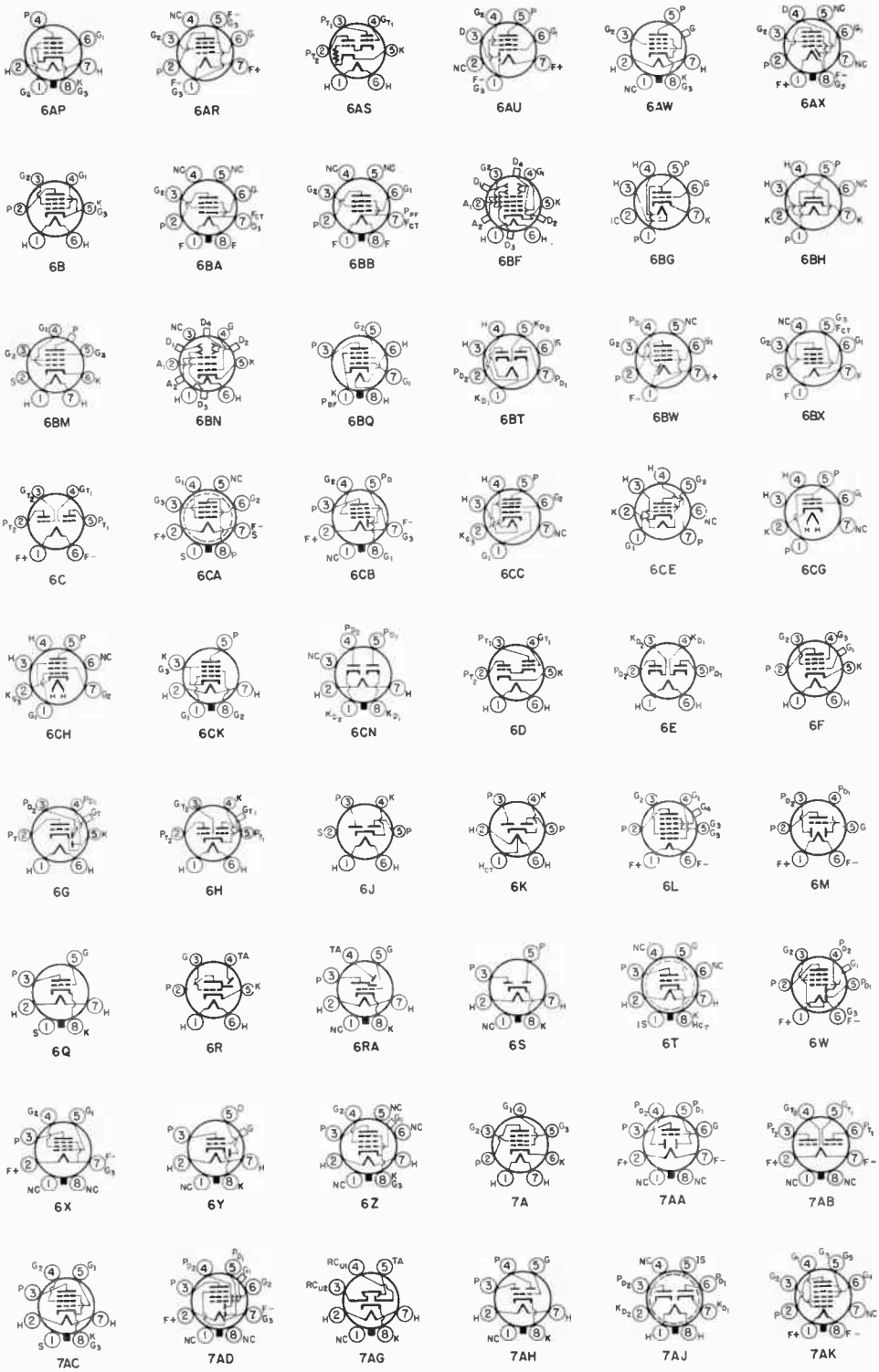

TUBE BASE DIAGRAMS

Bottom views are shown. Terminal designations on sockets are given on page V5.

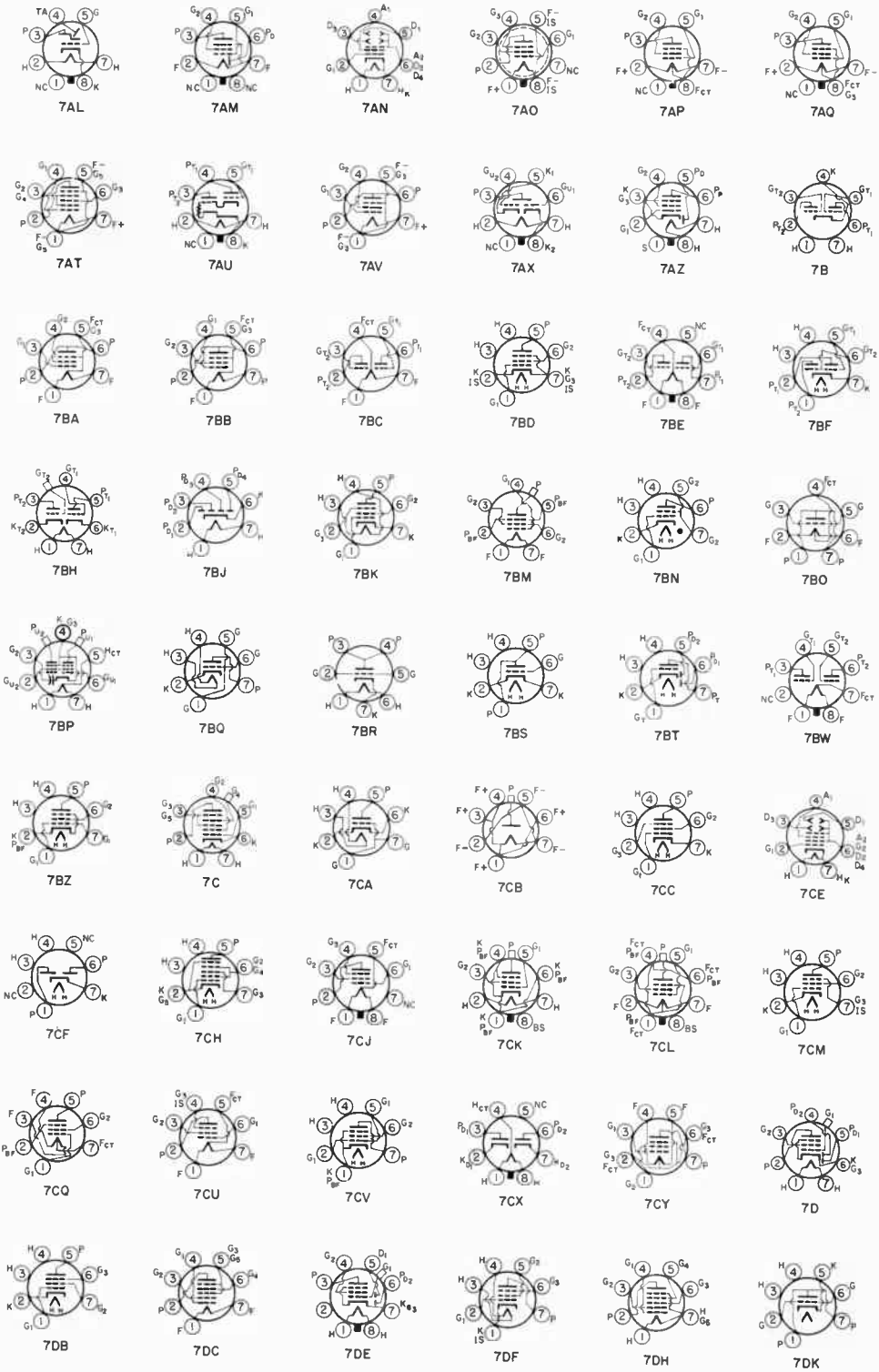

TUBE BASE DIAGRAMS

Bottom views are shown. Terminal designations on sockets are given on page V5.

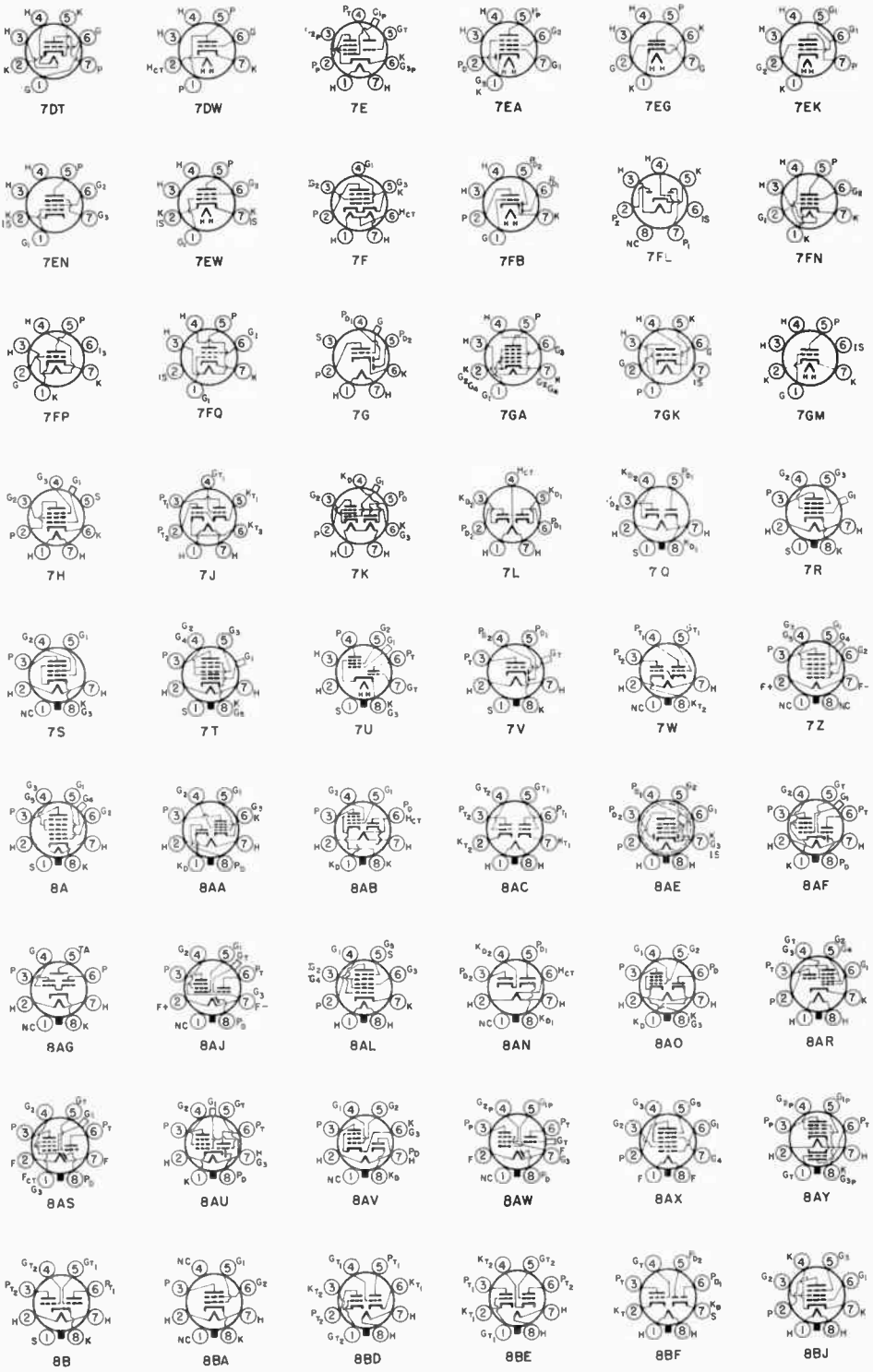

TUBE BASE DIAGRAMS

Bottom views are shown. Terminal designations on sockets are given on page V5.

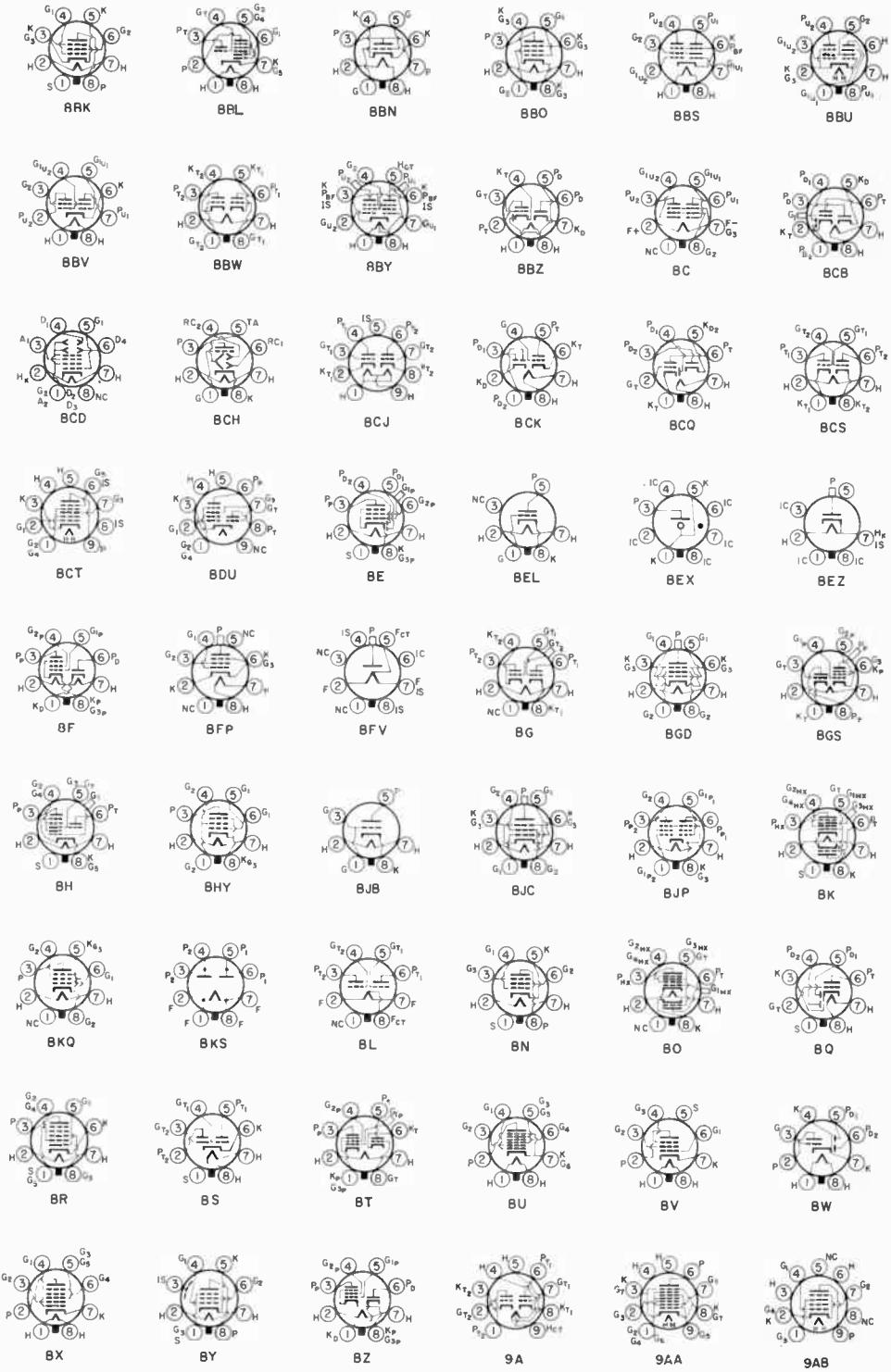

TUBE BASE DIAGRAMS

Bottom views are shown. Terminal designations on sockets are given on page V5.

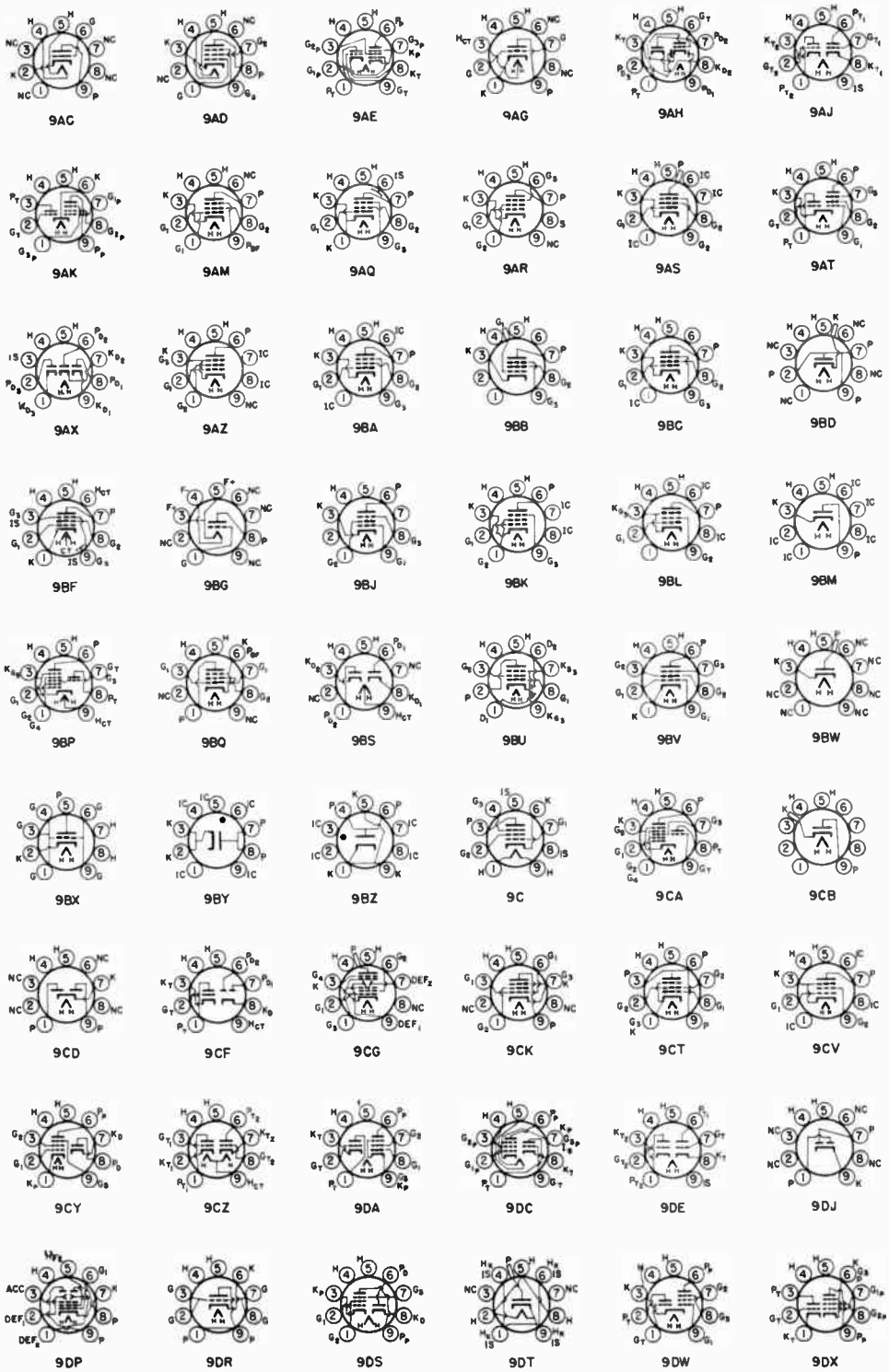

TUBE BASE DIAGRAMS

Bottom views are shown. Terminal designations on sockets are given on page V5.


9DZ


9E


9EC


9ED

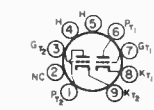
9EF


9FG

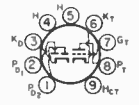
9EN


9ER


9ES

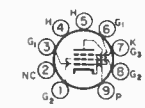
9EU

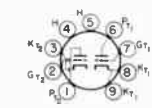
9EW


9F


9FA


9FC


9FE


9FG


9FH


9FJ


9FN


9FT


9FX

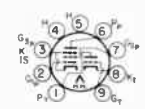
9FZ


9G


9GC


9GE


9GF


9GJ

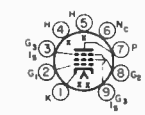
9GK


9GM


9GR


9GS


9H


9HF

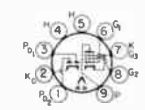
9HK


9HN


9HR


9HV

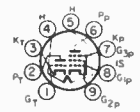
9HX


9HZ

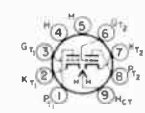
9J


9JC


9JD

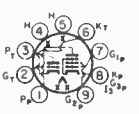
9JF


9JG


9JU


9JX


9JY


9K


9KA


9KR


9KS


9KT


9KU


9L

TUBE BASE DIAGRAMS

Bottom views are shown. Terminal designations on sockets and * meaning are given on page V5.


9LK


9LS

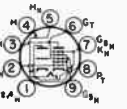
9KV


9LW


9LY

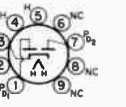
9M


9MS


9N


9NM

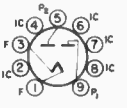
9NT


9NZ


9PA


9PB


9PM


9PU


9PX


9Q

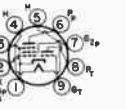
9QA


9QL

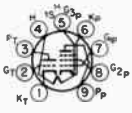
9QP


9R


9S


9T


9U


9V


9X


9Y

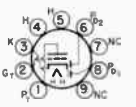
9Z


11A


11B


11C


11J


11L


11M


11N


11S


11T

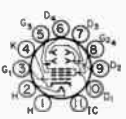
11V


12A


12AQ *


12AS *


12BF


12BJ


12BM


12BQ


12BW


12BY


12CA


12CT *


12E


12EA *


12EU


12F


12FB

TUBE BASE DIAGRAMS

Bottom views are shown. Terminal designations on sockets are given on page V5.

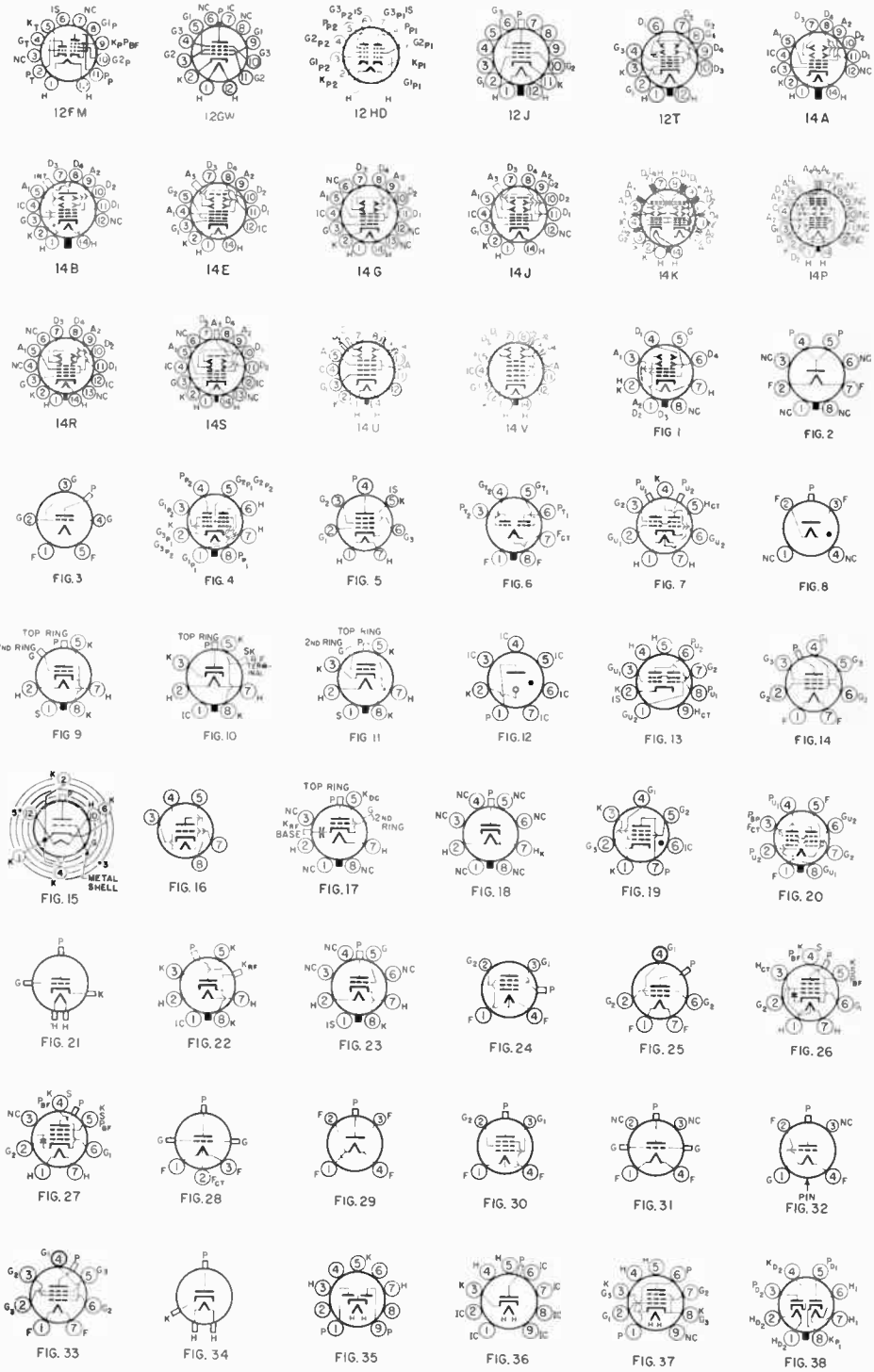

TUBE BASE DIAGRAMS

Bottom views are shown. Terminal designations on sockets are given on page V5.

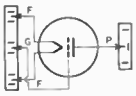
FIG. 39

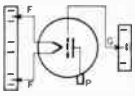
FIG. 40

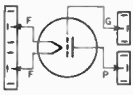
FIG. 41

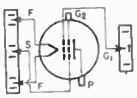
FIG. 42

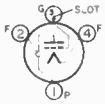
FIG. 43

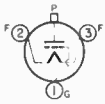
FIG. 44


FIG. 45

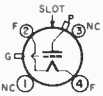
FIG. 46


FIG. 47

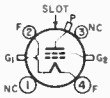
FIG. 48

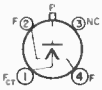
FIG. 49

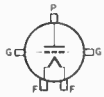
FIG. 50

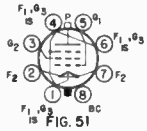
FIG. 51

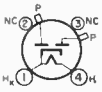
FIG. 52

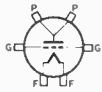
FIG. 53

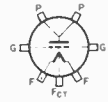
FIG. 54

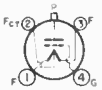
FIG. 55

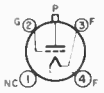
FIG. 56

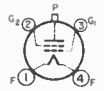
FIG. 57

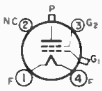
FIG. 58

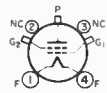
FIG. 59

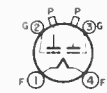
FIG. 60

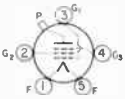
FIG. 61


FIG. 62

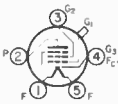
FIG. 63

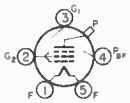
FIG. 64

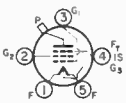
FIG. 65

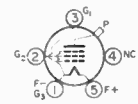
FIG. 66


FIG. 67

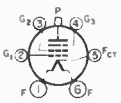
FIG. 68

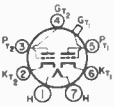
FIG. 69

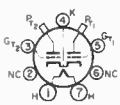
FIG. 70

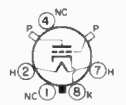
FIG. 71


FIG. 72

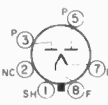
FIG. 73


FIG. 74


FIG. 75


FIG. 76

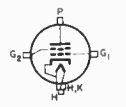
FIG. 77

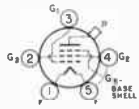
FIG. 78

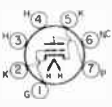
FIG. 79

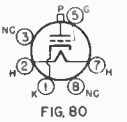
FIG. 80

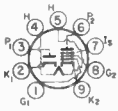
FIG. 81


FIG. 82

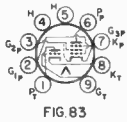
FIG. 83


FIG. 84


FIG. 85

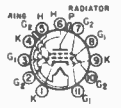
FIG. 86

Type	Name	Base	Fil. or Heater V	Fil. or Heater Amp.	Capacitances pF C_{in}	Capacitances pF C_{out}	Capacitances pF C_{gp}	Plate Supply V	Grid Bias	Screen Volts	Screen mA	Plate mA	Plate Res. Ohms	Transconductance[11]	Amp. Factor[4]	Load Res. Ohms	Watts Output
6AB4	Uhf Triode	5CE	6.3	0.15	2.2	0.5	1.5	250	200*	—	—	10	10.9K	5500	60	—	—
6AF4A	Uhf — Triode; A_1 Amp.	7DK	6.3	0.225	2.2	0.45	1.9	80	150*	—	—	16	2.27K	6600	15	—	—
	Osc. 950 MHz							100	10KΩ	—	0.4[9]	22	—	—	—	—	—
6AG5	Sharp Cut-off Pent.	7BD	6.3	0.3	6.5	1.8	0.03	250	180*	150	2.0	6.5	800K	5000	—	—	—
								100	180*	100	1.4	4.5	600K	4500	—	—	—
6AH6	Sharp Cut-off Pent.	7BK	6.3	0.45	10.0	2.0	0.03	300	160*	150	2.5	10	500K	9600	—	—	—
	Pent. Amp. / Triode Amp.							150	160*	—	—	12.5	3.6K	11K	40	—	—
6AJ4	Uhf Triode	9BX	6.3	0.225	4.4	0.18	2.4	125	68*	—	—	16	4.2K	10K	42	—	—
6AK5	Sharp Cut-off Pent.	7BD	6.3	0.175	4.0	2.8	0.02	180	200*	120	2.4	7.7	690K	5100	—	—	—
								150	330*	140	2.2	7	420K	4300	—	—	—
								120	200*	120	2.5	7.5	340K	5000	—	—	—
6AK6	Pwr. Amp. Pent.	7BK	6.3	0.15	3.6	4.2	0.12	180	−9	180	2.5	15	200K	2300	—	10K	1.1
6AL5	Dual Diode[10]	6BT	6.3	0.3	—	—	—	Max. rms voltage −117. Max. dc output current −9 mA.[1]									
6AM4	Uhf Triode	9BX	6.3	0.225	4.4	0.16	2.4	150	100*	—	—	7.5	10K	9000	90	—	—
6AM8A‡	Diode — Sharp Cut-off Pent.	9CY	6.3	0.45	6.0	2.6	0.015	200	120*	150	2.7	11.5	600K	7000	—	—	—
6AN4	Uhf Triode	7DK	6.3	0.225	2.8	0.28	1.7	200	100*	—	—	13	—	10K	70	—	—
6AN5	Beam Pwr. Pent.	7BD	6.3	0.45	9.0	4.8	0.075	120	120*	120	12.0	35	12.5K	8000	—	2.5K	1.3
6AN8A‡	Medium-μ Triode	9DA	6.3	0.45	2.0	2.7	1.5	200	−6	—	—	13	5.75K	3300	—	—	—
	Sharp Cut-off Pent.				7.0	2.3	0.04	200	180*	150	2.8	9.5	30K	6200	—	—	—
6AQ5A‡	Beam Pwr. Pent.	7BZ	6.3	0.45	8.3	8.2	0.35	180	−8.5	180	3/4	30[2]	58K	3700	29[5]	5.5K	2.0
								250	−12.5	250	4.5/7	47[2]	52K	4100	45[5]	5K	4.5
6AQ6	Dual Diode — High-μ Triode	7BT	6.3	0.15	1.7	1.5	1.8	100	−1	—	—	0.8	61K	1150	70	—	—
								250	−3	—	—	1	58K	1200	70	—	—
6AQ8	High-μ Twin Triode	9AJ	6.3	0.435	0.3	1.2	1.5	250	−2	—	—	10	9.7K	6000	—	—	—
6AR5	Pwr. Amp. Pent.	6CC	6.3	0.4	—	—	—	250	−16.5	250	5.7/10	35[2]	65K	2400	34[5]	7K	3.2
								250	−18	250	5.5/10	33[2]	68K	2300	32[5]	7.6K	3.4
6AR8	Sheet Beam	9DP	6.3	0.3	—	—	—	TV Color Ckts. — Synchronous Detector — Burst Gate									
6AS5	Beam Pwr. Amp.	7CV	6.3	0.8	12	6.2	0.6	150	−8.5	110	2/6.5	36[2]	—	5600	35[5]	4.5K	2.2
6AS6	Sharp Cut-off Pent.	7CM	6.3	0.175	4	3	0.2	120	−2	120	3.5	5.2	110K	3200	—	—	—
6AS8	Diode — Sharp Cut-off Pent.	9DS	6.3	0.45	7	2.2	0.04	200	180*	150	3	9.5	300K	6200	—	—	—
6AT6	Duplex Diode — High-μ Triode	7BT	6.3	0.3	2.3	1.1	2.1	250	−3	—	—	1	58K	1200	70	—	—
6AT8A‡	Medium-μ Triode	9DW	6.3	0.45	2	0.5	1.5	100	100*	—	—	8.5	6.9K	5800	40	—	—
	Sharp Cut-off Pent.				4.5	0.9	0.025	250	200*	150	1.6	7.7	750K	4600	—	—	—
6AU6A‡	Sharp Cut-off Pent.	7BK	6.3	0.3	5.5	5	0.0035	250	68*	150	4.3	10.6	1 meg.	5200	—	—	—
6AU8A‡	Medium-μ Triode	9DX	6.3	0.6	2.6	0.34	2.2	150	150*	—	—	9	8.2K	4900	40	—	—
	Sharp Cut-off Pent.				7.5	3.4	0.06	200	82*	125	3.4	15	150K	7000	—	—	—
6AV6	Dual Diode — High-μ Triode	7BT	6.3	0.3	2.2	0.8	2.0	250	−2	—	—	1.2	62.5K	1600	100	—	—
6AW8A‡	High-μ Triode	9DX	6.3	0.6	3.2	0.32	2.2	200	−2	—	—	4	17.5K	4000	70	—	—
	Sharp Cut-off Pent.				11	2.8	0.036	200	180*	150	3.5	13	400K	9000	—	—	—
6AX8	Medium-μ Triode	9AE	6.3	0.45	2.5	1	1.8	150	56*	—	—	18	5K	8500	40	—	—
	Sharp Cut-off Pent.				5	3.5	0.006	250	120*	110	3.5	10	400K	4800	—	—	—
6AZ8	Medium-μ Triode	9ED	6.3	0.45	2	1.7	1.7	200	−6	—	—	13	5.75K	3300	19	—	—
	Semiremote Cut-off Pent.				6.5	2.2	0.02	200	180*	150	3	9.5	300K	6000	—	—	—
6BA6	Remote Cut-off Pent.	7BK	6.3	0.3	5.5	5	0.0035	250	68*	100	4.2	11	1 meg.	4400	—	—	—
6BA7	Pentagrid Conv.	8CT	6.3	0.3	Osc. 20kΩ			250	−1	100	10	3.8	1 meg.	950	—	—	—
6BA8A‡	Medium-μ Triode	9DX	6.3	0.6	2.5	0.7	2.2	200	−8	—	—	8	6.7K	2700	18	—	—
	Sharp Cut-off Pent.				11	2.8	0.036	200	180*	150	3.5	13	400K	9000	—	—	—
6BC4	Uhf Medium-μ Triode	9DR	6.3	0.225	2.9	0.26	1.6	150	100*	—	—	14.5	4.8K	10K	48	—	—
6BC5	Sharp Cut-off Pent.	7BD	6.3	0.3	6.5	1.8	0.03	250	180*	150	2.1	7.5	800K	5700	—	—	—
6BC7	Triple Diode	9AX	6.3	0.45	Max. diode current per plate = 12 mA Max. htr.-cath. volts = 200												
6BC8	Medium-μ Dual Triode[10]	9AJ	6.3	0.4	2.5	1.3	1.4	150	220*	—	—	10	—	6200	35	—	—
6BD6	Remote Cut-off Pent.	7BK	6.3	0.3	4.3	5.0	0.005	100	−1	100	5	13	150K	2500	—	—	—
								250	−3	100	3	9	800K	2000	—	—	—
6BE6	Pentagrid Conv.	7CH	6.3	0.3	Osc. 20kΩ			250	−1.5	100	6.8	2.9	1 meg.	475	—	—	—
6BE8A‡	Medium-μ Triode	9EG	6.3	0.45	2.8	1.5	1.8	150	56*	—	—	18	5K	8500	40	—	—
	Sharp Cut-off Pent.				4.4	2.6	0.04	250	68*	110	3.5	10	400K	5200	—	—	—
6BF5	Beam Pwr. Amp.	7BZ	6.3	1.2	14	6	0.65	110	−7.5	110	4/10.5	39[2]	12K	7500	36[5]	2.5K	1.9
6BF6	Dual Diode — Medium-μ Triode	7BT	6.3	0.3	1.8	0.8	2	250	−9	—	—	9.5	8.5K	1900	16	10K	0.3
6BH6	Sharp Cut-off Pent.	7CM	6.3	0.15	5.4	4.4	0.0035	250	−1	150	2.9	7.4	1.4 meg.	4600	—	—	—
6BH8‡	Medium-μ Triode	9DX	6.3	0.6	2.6	0.38	2.4	150	−5	—	—	9.5	5.15K	3300	17	—	—
	Sharp Cut-off Pent.				7	2.4	0.046	200	82*	125	3.4	15	150K	7000	—	—	—
6BJ6A	Remote Cut-off Pent.	7CM	6.3	0.15	4.5	5.5	0.0035	250	−1	100	3.3	9.2	1.3 meg.	3800	—	—	—
6BJ7	Triple Diode	9AX	6.3	0.45	Max. peak inverse plate voltage = 330 V. Max. dc plate current each diode = 1.0 mA												
6BJ8‡	Dual Diode — Medium-μ Triode	9ER	6.3	0.6	2.8	0.38	2.6	250	−9	—	—	8	7.15K	2800	20	—	—
6BK5	Beam Pwr. Pent.	9BQ	6.3	1.2	13	5	0.6	250	−5	250	3.5/10	37[2]	100K	8500	35[5]	6.5K	3.5
6BK6	Dual Diode — High-μ Triode	7BT	6.3	0.3	—	—	—	250	−2	—	—	1.2	62.5K	1600	100	—	—
6BK7B	Medium-μ Dual Triode[10]	9AJ	6.3	0.4	3	1	1.8	150	56*	—	—	18	4.6K	9300	43	—	—
6BL8	Triode	9DC	6.3	0.43	2.5	1.8	1.5	250	−1.3	—	—	14	—	5000	20	—	—
	Pentode				5.2	3.4	0.025	250	−1.3	175	2.8	10	400K	6200	47	—	—
6BN4A	Medium-μ Triode	7EG	6.3	0.2	3.2	1.4	1.2	150	220*	—	—	9	6.3K	6800	43	—	—
6BN6	Gated-Beam Pent.	7DF	6.3	0.3	4.2	3.3	0.004	80	−1.3	60	5	0.23	—	—	—	68K	—
6BN8‡	Dual Diode — High-μ Triode	9ER	6.3	0.6	3.6	0.25	2.5	250	−3	—	—	1.6	28K	2500	70	—	—
6BQ5	Pwr. Amp. Pent.	9CV	6.3	0.76	10.8	6.5	0.5	300	−7.3	200	10.8	49.5[2]	38K	—	—	5.2K	17[3]
6BQ7A	Medium-μ Dual Triode[10]	9AJ	6.3	0.4	2.85	1.35	1.15	150	220*	—	—	9	6.1K	6400	39	—	—
6BR8A‡	Medium-μ Triode	9FA	6.3	0.45	2.5	0.4	1.8	150	56*	—	—	18	5K	8500	40	—	—
	Sharp Cut-off Pent.				5	2.6	0.015	250	68*	110	3.5	10	400K	5200	—	—	—
6BS8	Low-Noise Dual Triode[10]	9AJ	6.3	0.4	2.6	1.35	1.15	150	220*	—	—	10	5K	7200	36	—	—
6BT6	Dual Diode — High-μ Triode	7BT	6.3	0.3	—	—	—	250	−3	—	—	1	58K	1200	70	—	—
6BT8	Dual Diode — Pent.	9FE	6.3	0.45	7	2.3	0.04	200	180*	150	2.8	9.5	300K	6200	—	—	—

TABLE I—MINATURE RECEIVING TUBES—*Continued*

Type	Name	Base	Fil. or Heater V	Fil. or Heater Amp.	Capacitances pF C_{in}	Capacitances pF C_{out}	Capacitances pF C_{gp}	Plate Supply V	Grid Bias	Screen Volts	Screen mA	Plate mA	Plate Res. Ohms	Transconductance[11]	Amp. Factor[4]	Load Res. Ohms	Watts Output
6BU6	Dual Diode — Low-μ Triode	7BT	6.3	0.3	—	—	—	250	−9	—	—	9.5	8.5K	1900	16	10K	0.3
6BU8	Dual Pent.[10]	9FG	6.3	0.3	6	3[1]	—	100[1]	—	67.5	3.3	2.2	—	—	—	—	—
6BV8‡	Dual Diode — Medium-μ Triode	9FJ	6.3	0.6	3.6	0.4	2	200	330*	—	—	11	5.9K	5600	33	—	—
6BW8	Dual Diode — Pent.	9HK	6.3	0.45	4.8	2.6	0.02	250	68*	110	3.5	10	250K	5200	—	—	—
6BX8	Dual Triode[10]	9AJ	6.3	0.4	—	—	1.4	65	−1	—	—	9	—	6700	25	—	—
6BY6	Pentagrid Amp.	7CH	6.3	0.3	5.4	7.6	0.08	250	−2.5	100	9	6.5	E_{c3} = −2.5 V.		1900	—	—
6BY8‡	Diode — Sharp Cut-off Pent.	9FM	6.3	0.6	5.5	5	0.0035	250	68*	150	4.3	10.6	1 meg.	5200	—	—	—
6BZ6	Semiremote Cut-off Pent.	7CM	6.3	0.3	7.5	1.8	0.02	200	180*	150	2.6	11	600K	6100	—	—	—
6BZ7	Medium-μ Dual Triode[10]	9AJ	6.3	0.4	2.5	1.35	1.15	150	220*	—	—	10	5.6K	6800	38	—	—
6BZ8	Dual Triode[10]	9AJ	6.3	0.4	—	—	—	125	100*	—	—	10[1]	5.6K	8000	45	—	—
6C4	Medium-μ Triode	6BG	6.3	0.15	1.8	1.3	1.6	250	−8.5	—	—	10.5	7.7K	2200	17	—	—
6CA5	Beam Pent.	7CV	6.3	1.2	15	9	0.5	125	−4.5	125	4/11	36[2]	15K	9200	37[5]	4.5K	1.5
6CB6A‡	Sharp Cut-off Pent.	7CM	6.3	0.3	6.5	1.9	0.02	200	180*	150	2.8	9.5	600K	6200	—	—	—
6CE5‡	Rf Pent.	7BD	6.3	0.3	6.5	1.9	0.03	200	180*	150	2.8	9.5	600K	6200	—	—	—
6CF6	Sharp Cut-off Pent.	7CM	6.3	0.3	6.3	1.9	0.02	200	180*	150	2.8	9.5	600K	6200	—	—	—
6CG6	Semiremote Cut-off Pent.	7BK	6.3	0.3	5	5	0.008	250	−8	150	2.3	9	720K	2000	—	—	—
6CG7‡	Medium-μ Dual Triode[10]	9AJ	6.3	0.6	2.3	2.2	4	250	−8	—	—	9	7.7K	2600	20	—	—
6CG8A‡	Medium-μ Triode	9GF	6.3	0.45	2.6	0.05	1.5	100	100*	—	—	8.5	6.9K	5800	40	—	—
	Sharp Cut-off Pent.				4.8	0.9	0.03	250	200*	150	1.6	7.7	750K	4600	—	—	—
6CH8	Medium-μ Triode	9FT	6.3	0.45	1.9	1.6	1.6	200	−6	—	—	13	5.75K	3300	19	—	—
	Sharp Cut-off Pent.				7	2.25	0.025	200	180*	150	2.8	9.5	300K	6200	—	—	—
6CL6	Pwr. Amp. Pent.	9BV	6.3	0.65	11	5.5	0.12	250	−3	150	7/7.2	31[2]	150K	11K	30[5]	7500	2.8
6CL8A‡	Medium-μ Triode	9FX	6.3	0.45	2.7	0.4	1.8	300	—	—	—	15	5K	8000	40	—	—
	Sharp Cut-off Tetrode				5	0.02	0.02	300	−1	300	4	12	100K	6400	—	—	—
6CM6	Beam Pwr. Amp.	9CK	6.3	0.45	8	8.5	0.7	315	−13	225	2.2/6	35[2]	80K	3750	34[5]	8.5K	5.5
6CM7‡	Medium-μ Dual Triode — Triode No. 1	9ES	6.3	0.6	2	0.5	3.8	200	−7	—	—	5	11K	2000	20	—	—
	Medium-μ Dual Triode — Triode No. 2				3.5	0.4	3	250	−8	—	—	10	4.1K	4400	18	—	—
6CM8‡	High-μ Triode	9FZ	6.3	0.45	1.6	0.22	1.9	250	−2	—	—	1.8	50K	2000	100	—	—
	Sharp Cut-off Pent.				6	2.6	0.02	200	180*	150	2.8	9.5	300K	6200	—	—	—
6CN7‡	Dual Diode — High-μ Triode	9EN	6.3	0.3	1.5	0.5	1.8	100	−1	—	—	0.8	54K	1300	70	—	—
			3.15	0.6				250	−3	—	—	1	58K	1200	70	—	—
6CQ8‡	Medium-μ Triode	9GE	6.3	0.45	2.7	0.4	1.8	125	56*	—	—	15	5K	8000	40	—	—
	Sharp Cut-off Tetrode				5	2.5	0.019	125	−1	125	4.2	12	140K	5800	—	—	—
6CR6	Diode — Remote Cut-off Pent.	7EA	6.3	0.3	—	—	—	250	−2	100	3	9.5	200K	1950	—	—	—
6CS5	Beam Pwr. Pent.	9CK	6.3	1.2	15	9	0.5	200	180*	125	2.2	47[2]	28K	8000	—	4K	3.8
6CS6	Pentagrid Amp.	7CH	6.3	0.3	5.5	7.5	0.05	100	−1	30	1.1	0.75	1 meg.	950	E_{c3} = 0 V.		—
6CS7‡	Medium-μ Dual Triode — Triode No. 1	9EF	6.3	0.6	1.8	0.5	2.6	250	−8.5	—	—	10.5	7.7K	2200	17	—	—
	Medium-μ Dual Triode — Triode No. 2				3.0	0.5	2.6	250	−10.5	—	—	19	3.45K	4500	15.5	—	—
6CU5	Beam Pwr. Pent.	7CV	6.3	1.2	13.2	8.6	0.7	120	−8	110	4/8.5	50[2]	10K	7500	—	2.5K	2.3
6CW4	Triode	12AQ	6.3	0.13	4.1	1.7	0.92	70	0	—	—	8	5.44K	12.5K	68	—	—
6CW5	Pentode	9CV	6.3	0.76	12	6	0.6	170	−12.5	170	5	70	—	—	—	2.4K	5.6
6CX8	Medium-μ Triode	9DX	6.3	0.75	2.2	0.38	4.4	150	150*	—	—	9.2	8.7K	4600	40	—	—
	Sharp Cut-off Pent.				9	4.4	0.06	200	68*	125	5.2	24	70K	10K	—	—	—
6CY5	Sharp Cut-off Tetrode	7EW	6.3	0.2	4.5	3	0.03	125	−7	80	1.5	10	100K	8000	—	—	—
6CY7	Dissimilar — Dual Triode	9EF	6.3	0.75	1.5[7]	0.3[7]	1.8[7]	250[7]	−3[7]	—	—	1.2[7]	52K[7]	1300[7]	68[7]	—	—
					5[8]	1[8]	4.4[8]	150[8]	620*[8]	—	—	30[8]	920[8]	5400[8]	5[8]	—	—
6CZ5‡	Beam Pwr. Amp. — A_1 Amp.	9HN	6.3	0.45	8	8.5	0.7	250	−14	250	4.6/8	48[2]	73K	4800	46[5]	5K	5.4
	Beam Pwr. Amp. — AB_1 Amp[3]							350	−23.5	280	3/13	103[2]	—	—	46[5]	7.5K[6]	1.5
6DB5	Beam Pwr. Amp.	9GR	6.3	1.2	15	9	0.5	200	180*	125	2.2/8.5	46/47	28K	8000	—	4K	3.8
6DB6	Sharp Cut-off Pent.	7CM	6.3	0.3	6	5	0.0035	150	−1	150	6.6	5.8	50K	2050	E_{c3} = −3 V		—
6DC6	Semiremote Cut-off Pent.	7CM	6.3	0.3	6.5	2	0.02	200	180*	150	3	9	500K	5500	—	—	—
6DE6	Sharp Cut-off Pent.	7CM	6.3	0.3	6.3	1.9	0.02	200	180*	150	2.8	9.5	600K	6200	—	—	—
6DE7	Dissimilar — Dual Triode	9HF	6.3	0.9	2.2[7]	0.52[7]	4[7]	250[7]	−11[7]	—	—	5.5[7]	8.75K[7]	2000[7]	17.5[7]	—	—
					5.5[8]	1[8]	8.5[8]	150[8]	−17.5[8]	—	—	35[8]	925[8]	6500[8]	6[8]	—	—
6DJ8	Twin Triode	9AJ	6.3	0.365	3.3	1.8	1.4	90	−1.3	—	—	15	—	12.5K	33	—	—
6DK6	Sharp Cut-off Pent.	7CM	6.3	0.3	6.3	1.9	0.02	300	−6.5	150	3.8	12	—	9800	—	—	—
6DR7	Dissimilar — Dual Triode	9HF	6.3	0.9	2.2	0.34	4.5	330	−3	—	—	1.4	—	1600	68[7]	—	—
					5.5	1.0	8.5	275	−17.5	—	—	35	—	6500	6[8]	—	—
6DS4	High-μ Triode	12AQ	6.3	0.135	4.1	1.7	.92	70	0	—	—	8	5.44K	12.5K	68	—	—
6DS5	Beam Pwr. Amp.	7BZ	6.3	0.8	9.5	6.3	0.19	250	−8.5	200	3/10	32[2]	28K	5800	32[5]	8K	3.8
								250	270*	200	3/9	25[2]	28K	5800	27[5]	8K	3.6
6DT5	Pwr. Amp. Pent.	9HN	6.3	0.76	10.8	6.5	0.5	300	−7.3	200	10.8	49.5[2]	38K	—	—	5.2K	17
6DT6	Sharp Cut-off Pent.	7EN	6.3	0.3	5.8	—	0.02	150	560*	100	2.1	1.1	150K	615	—	—	—
6DT8	High-μ Dual Triode[10]	9DE	6.3	0.3	2.7	1.6	1.6	250	200*	—	—	10	10.9K	5500	60	—	—
6DV4	Triode	12EA	6.3	0.135	3.7	0.25	1.8	75	100*	—	—	10.5	3.1K	11.5K	35	—	—
6DW5	Beam Pwr. Amp.	9CK	6.3	1.2	14	9	0.5	200	−22.5	150	2	55	15K	5500	—	—	—
6DX8	High-μ Triode	9HX	6.3	0.720	4.0	2.3	2.7	200	−1.7	—	—	3	—	4000	—	—	—
	Sharp Cut-off Pent.				9.0	4.5	0.1	200	−2.9	200	3	18	130K	10.4K	—	—	—
6DZ4	Medium-μ Triode	7DK	6.3	0.225	2.2	1.3	1.8	80	−11	—	—	15	2.0K	6700	14	—	—
6EA5	Sharp Cut-off Tet.	7EW	6.3	0.2	3.8	2.3	.06	250	−1	140	0.95	10	150K	8000	—	—	—
6EA8‡	Triode	9AE	6.3	0.45	3	0.3	1.7	330	−12	—	—	18	5K	8500	40	—	—
	Sharp Cut-off Pent.				5	2.6	0.02	330	−9	330	4	12	80K	6400	—	—	—
6EB5	Dual Diode	6BT	6.3	0.3	Max. PIV 550, Max. DC output current 5.5 mA.												
6EB8	High-μ Triode	9DX	6.3	0.75	2.4	.36	4.4	330	−5	—	—	2	37K	2700	100	—	—
	Sharp Cut-off Pent.				11	4.2	0.1	330	−9	—	7	25	75K	12.5K	—	—	—
6EH5	Power Pentode	7CV	6.3	1.2	17	9	0.65	135	0	117	14.5	42	11K	14.6K	—	3K	1.4
6EH7	Remote Cut-off Pent.	9AQ	6.3	0.3	9	3	.005	200	−2	90	4.5	12	500K	12.5K	—	—	—
6EH8	Triode	9JG	6.3	0.45	2.8	1.7	1.8	125	−1	—	—	13.5	—	7500	40	—	—
	Pentagrid Conv.				4.8	2.4	0.02	125	−1	125	4	12	170K	6000	—	—	—
6EJ7	Sharp Cut-off Pent.	9AQ	6.3	0.3	10	3	.005	200	−2.5	200	4.7	10	350K	15K	—	—	—
6ER5	Tetrode	7FN	6.3	0.18	4.4	3.0	0.38	200	−1.2	0	0	10	8K	10.5K	80	—	—
6ES5	Triode	7FP	6.3	0.20	3.2	3.2	0.5	200	−1	—	—	10	8K	9000	75	—	—
6ES8	Dual Triode	9DE	6.3	0.365	3.4	1.7	1.9	130	−1.2	—	—	15	—	12.5K	34	—	—
6EU7	Twin Triode	9LS	6.3	0.3	1.6	0.2	1.5	100	−1	—	—	0.5	80K	1250	100	—	—

Type	Name	Base	Fil. or Heater V	Fil. or Heater Amp.	Capacitances pF C_{in}	Capacitances pF C_{out}	Capacitances pF C_{gp}	Plate Supply V	Grid Bias	Screen Volts	Screen mA	Plate mA	Plate Res. Ohms	Transconductance[11]	Amp. Factor[4]	Load Res. Ohms	Watts Output
6EU8	Triode	9JF	6.3	0.45	5.0	2.6	0.02	150	—	—	—	18	5K	8500	40	—	—
	Pentode				3.0	1.6	1.7	125	−1	125	4	12	80K	6400	—	—	—
6EV5	Sharp Cut-off Tet.	7EW	6.3	0.2	4.5	2.9	0.035	250	−1	80	0.9	11.5	150K	8800	—	—	—
6EZ8	Triple Triode — Triode No. 1	9KA	6.3	0.45	2.6	1.4	1.5	330	−4	—	—	4.2	13.6K	4200	57	—	—
	Triode — Triodes No. 2 & 3					1.2											
6FG5	Pentode	7GA	6.3	0.2	4.2	2.8	0.02	250	−0.2	250	.42	9	250K	9500	—	—	—
6FG7	Triode	9GF	6.3	0.45	3.0	1.3	1.8	125	−1	—	—	13	5700	7500	43	—	—
	Pentode				5.0	2.4	0.2	125	−1	125	4	11	180K	6000	—	—	—
6FH5	Triode	7FP	6.3	0.2	3.2	3.2	0.6	135	−1	—	—	11	5600	9000	50	—	—
6FM8	Duplex Diode	9KR	6.3	0.45	2.4	—	—	Max. ac voltage = 200. Max. dc output current = 5 mA.									
					2.2	—	—										
	Triode				1.5	0.16	1.8	300	−3	—	—	1	58K	1200	70	—	—
6FQ5A‡	Triode	7FP	6.3	0.18	4.8	4.0	0.4	135	−1.2	—	—	11.5	5500	11K	60	—	—
6FS5	Vhf Pent.	7GA	6.3	0.2	4.8	2.0	.03	275	−0.2	135	0.17	9	240K	10K	—	—	—
6FV6	Sharp Cut-off Tetrode	7FQ	6.3	0.2	4.5	3	0.03	125	−1	80	1.5	10	100K	8000	—	—	—
6FV8A‡	Triode	9FA	6.3	0.45	2.8	1.5	1.8	330	−1	—	—	14	5K	8000	40	—	—
	Pentode				5	2	0.02	330	−1	125	4	12	200K	6500	—	—	—
6FW8	Medium-μ Twin Triode	9AJ	6.3	0.4	3.4	2.4	1.9	100	−1.2	—	—	15	2500	13K	33	—	—
6FY5	Tetrode	7FN	6.3	0.2	4.75	3.3	0.50	135	−1	—	—	11	—	13K	70	—	—
6GC5	Pwr. Pent.	9EU	6.3	1.2	18.0	7.0	0.9	110	−7.5	110	4	50	13K	8000	—	2K	2.1
6GJ8	Triode	9AE	6.3	0.6	3.4	1.6	2.6	125	−1	—	—	13.5	5K	8500	40	—	—
	Pentode				8	2.4	0.36	125	−1	125	4.5	12	150K	7500	—	—	—
6GK5	High-μ Triode	7FP	6.3	0.18	5	3.5	0.52	135	−1	—	—	11.5	5400	15K	78	—	—
6GK6	Power Pentode	9GK	6.3	0.76	10	7.0	0.14	250	−7.3	250	5.5	48	38K	11.3K	—	5.2K	5.7
6GM6	Pentode	7CM	6.3	0.4	10	2.4	0.036	125	—	125	3.4	14	200K	13K	—	—	—
6GN8	High-μ Triode	9DX	6.3	0.75	2.4	0.36	4.4	250	−2	—	—	2	37K	2700	100	—	—
	Sharp Cut-off Pent.				11	4.2	0.1	200	—	150	5.5	25	60K	11.5K	—	—	—
6GS8	Twin Pentode	9LW	6.3	0.30	6.0	3.2	—	100	−10	67.5	3.6	2.0	—	—	—	—	—
6GU5	Beam Pent.	7GA	6.3	0.22	7	3.2	0.018	135	−0.4	135	0.25	9.0	670K	1500	—	—	—
6GV8	High-μ Triode	9LY	6.3	0.9	—	—	—	100	−0.8	—	—	5	7.6K	6500	50	—	—
	Pentode				—	—	—	170	−15	170	2.7	41	25K	7500	—	—	—
6GY8	Triple Triode	9MB	6.3	0.45	—	—	—	125	−1	—	—	4.5	14K	4500	63	—	—
6GW5	Vhf Triode	7GK	6.3	0.19	5.5	4.0	0.6	135	−1	—	—	12.5	5.8K	15K	70	—	—
6GZ5	Pwr. Amp. Pent.	7CV	6.3	0.38	8.5	3.8	0.24	250	270*	250	2.7	16	150K	8400	—	15K	1.1
6HB6	Power Pentode	9PU	6.3	0.76	13	8.0	0.18	250	100*	250	6.2	40	24K	20K	—	—	—
6HB7	Sharp Cut-off Pent.	9QA	6.3	0.45	5.0	3.4	0.010	125	−1	125	4	12	200K	6400	—	—	—
	Medium-μ Triode				3.0	1.9	1.9	150	56*	—	—	18	5K	8500	40	—	—
6HF8	High-μ Triode	9DX	6.3	0.78	2.8	2.6	3.5	200	−2	—	—	4	17.5K	4000	70	—	—
	Sharp Cut-off Pent.				10	4.2	0.1	200	68*	125	7	25	75K	12.5K	—	—	—
6HG5	Pwr. Amp. Pent.	7BZ	6.3	0.45	8.0	8.5	0.4	250	−12.5	250	4.5	47	52K	4100	—	5K	4.5
6HK5	Triode	7GM	6.3	0.19	4.4	2.6	0.29	135	−1.0	—	—	12.5	5K	15K	75	—	—
6HM5/6HA5	High-μ Triode	7GM	6.3	0.18	4.3	2.9	0.36	135	—	—	—	19	4K	20K	80	—	—
6HQ5	Sharp Cut-off Triode	7GM	6.3	0.2	5.0	3.5	0.52	135	−1	—	—	11.5	5.4K	15K	78	—	—
6HS6	Sharp Cut-off Pent.	7BK	6.3	0.45	8.8	5.2	.006	150	0	75	2.8	8.8	500K	9500	—	—	—
6HZ8	High-μ Triode	9DX	6.3	1.125	3.8	0.4	5.0	200	−2	—	—	3.5	—	4K	70	—	—
	Sharp Cut-off Pent.				12	5	0.1	250	100*	170	6	29	140K	12.6K	—	—	—
6J4	Grounded-Grid Triode	7BQ	6.3	0.4	7.5	3.9	0.12	150	100*	—	—	15	4.5K	12K	55	—	—
6J6A‡	Medium-μ Dual Triode — A_1 Amp.[10]	7BF	6.3	0.45	2.2	0.4	1.6	100	50*	—	—	8.5	7.1K	5300	38	—	—
	Mixer							150	810*	—	—	4.8	10.2K	1900	Osc. peak voltage = 3 V		
6JC6A	Sharp Cut-off Pent.	9PM	6.3	0.3	8.5	3	0.19	125	56*	125	3.4	14	180K	16K	—	—	—
6JC8	Med.-μ Triode	9PA	6.3	0.45	2.8	.44	1.3	125	−1	—	—	12	6K	6500	40	—	—
	Sharp Cut-off Pent.				4.8	0.9	0.038	125	−1	125	2.2	9	300K	5500	—	—	—
6JK8	Dual Vhf Triode	9AJ	6.3	0.4	3.0	1.0	1.4	100	−1	—	—	5.3	8K	6800	55	—	—
					5.0	4.0	0.6	135	−1.2	—	—	10	5.4K	13K	70	—	—
6KD8	Sharp Cut-off Pent.	9AE	6.3	0.4	5.0	2.6	0.015	125	−1	110	3.5	9.5	200K	5000	—	—	—
	Medium-μ Triode				1.5	2.8	1.8	125	−1	—	—	13.5	—	7500	40	—	—
6KE8	Medium-μ Triode	9DC	6.3	0.4	2.4	2.0	1.3	125	68*	—	—	13	5.0K	8000	40	—	—
	Sharp Cut-off Pent.				5.0	3.4	.015	125	33*	125	2.8	10	125K	12K	—	—	—
6KR8	Sharp Cut-off Pent.	9DX	6.3	0.75	13	4.4	0.075	200	82*	100	3.0	19.5	60K	20K	—	—	—
	Medium-μ Triode				4.2	3.0	2.6	125	68*	—	—	15	4400	10.4K	46	—	—
6KT6	Remote Cut-off Pent.	9PM	6.3	0.3	9.5	3	0.19	125	56*	125	4.2	17	—	18K	—	—	—
6KT8	High-μ Triode	9QP	6.3	0.6	32	1.6	3.0	250	−2	—	—	1.8	31.5K	3200	100	—	—
	Sharp Cut-off Pent.				7.5	2.2	0.046	125	1	125	4.5	12	150K	10K	—	—	—
6KY6	Sharp Cut-off Pent.	9GK	6.3	0.52	14	6.0	0.16	200	0	135	5.2	30	40K	30K	—	—	—
6KZ8	Sharp Cut-off Pent.	9FZ	6.3	0.45	5.5	3.4	0.01	125	−1	125	4	12	200K	7500	—	—	—
	Medium-μ Triode				3.2	1.8	1.6	125	−1	—	—	13.5	5400	8500	46	—	—
6LJ8	Sharp Cut-off Pent.	9GF	6.3	0.4	5.5	3.4	0.015	125	33*	125	3.5	12	125K	13K	—	—	—
	Medium-μ Triode				2.4	2.0	1.4	125	68*	—	—	13	5K	8000	40	—	—
6LY8	High-μ Triode	9DX	6.3	0.75	2.6	2.8	3.8	200	−2.0	—	—	1.0	59K	1700	100	—	—
	Sharp Cut-off Pent.				13.0	4.4	0.75	200	—	100	3	19.5	60K	20K	—	—	—
6MU8	Medium-μ Triode	9AE	6.3	0.6	3	2.2	2.2	330	0	—	—	11.5	5.8K	6000	35	—	—
	Sharp Cut-off Pent.							330	0	150	4.2	19	165K	9000	—	—	—
6S4A	Medium-μ Triode	9AC	6.3	0.6	4.2	0.9	2.6	250	−8	—	—	26	3.6K	4500	16	—	—
6T4	Uhf Triode	7DK	6.3	0.225	2.6	0.25	1.7	80	150*	—	—	18	1.86K	7000	13	—	—
6T8A‡	Triple Diode-High-μ Triode	9E	6.3	0.45	1.6	1	2.2	100	−1	—	—	0.8	54K	1300	70	—	—
								250	−3	—	—	1	58K	1200	70	—	—
6U8A‡	Medium-μ Triode	9AE	6.3	0.45	2.5	0.4	1.8	150	56*	—	—	18	5K	8500	40	—	—
	Sharp Cut-off Pent.				5	2.6	0.01	250	68*	110	3.5	10	400K	5200	—	—	—

TABLE I—MINIATURE RECEIVING TUBES—*Continued*

Type	Name	Base	Fil. or Heater V	Fil. or Heater Amp.	Capacitances pF C_{in}	Capacitances pF C_{out}	Capacitances pF C_{pp}	Plate Supply V	Grid Bias	Screen Volts	Screen mA	Plate mA	Plate Res. Ohms	Transconductance[11]	Amp. Factor[4]	Load Res. Ohms	Watts Output
6X8A‡	Medium-μ Triode	9AK	6.3	0.45	2.0	0.5	1.4	100	100*	—	—	8.5	6.9K	—	40	—	—
	Sharp Cut-off Pent.				4.3	0.7	0.09	250	200*	150	1.6	7.7	750K	—	—	—	—
12AB5	Beam Pwr. Amp. A_1 Amp.	9EU	12.6	0.2	8	8.5	0.7	250	−12.5	250	4.5/7	47[2]	50K	4100	45[5]	5K	4.5
	Beam Pwr. Amp. AB_1 Amp.[3]							250	−15	250	5, 13	79[2]	60K[1]	3750	70[5]	10K[6]	10
12AC6	Remote Cut-off Pent.	7BK	12.6	0.15	4.3	5	0.005	12.6	0	12.6	0.2	0.55	500K	730	—	—	—
12AD6	Pentagrid Conv.	7CH	12.6	0.15	8	8	0.3	12.6	0	12.6	1.5	0.45	1 meg.	260	Grid No. 1 Res. 33K		
12AE6A	Dual Diode — Medium-μ Triode	7BT	12.6	0.15	1.8	1.1	2	12.6	0	—	—	0.75	15K	1000	15	—	—
12AE7	Low-μ Dissimilar Double Triode	9A	12.6	0.45	4.7	0.75	3.9	16	—	—	—	1.9	31.5K	4000	13	—	—
					4.2	0.85	3.4	16	—	—	—	7.5	985	6500	6.4	—	—
12AF6	Rf Pent.	7BK	12.6	0.15	5.5	4.8	0.006	12.6	0	12.6	0.35	0.75	300K	1150	—	—	—
12AJ6	Dual Diode — High-μ Triode	7BT	12.6	0.15	2.2	0.8	2	12.6	0	—	—	0.75	45K	1200	55	—	—
12AL8	Medium-μ Triode	9GS	12.6	0.45	1.5	0.3	12	12.6	−0.9	—	—	0.25	27K	550	15	—	—
	Tetrode				8	1.1	0.7	12.6	−0.8	12.6**	50**	25	1K	8000	—	—	—
12AQ5	Beam Pwr. Amp. A_1 Amp.	7BZ	12.6	0.225	8.3	8.2	0.35	250	−12.5	250	4.5/7	47[2]	52K	4100	45[5]	5K	4.5
	Beam Pwr. Amp. AB_1 Amp.[3]							250	−15	250	5/13	79[2]	60K[1]	3750[1]	70[5]	10K[6]	10
12AT7	High-μ Dual Triode[10]	9A	12.6	0.15	2.2[7]	0.5[7]	1.5[7]	100	270*	—	—	3.7	15K	4000	60	—	—
			6.3	0.3	2.2[8]	0.4[8]	1.5[8]	250	200*	—	—	10	10.9K	5500	60	—	—
12AU7A	Medium-μ Dual Triode[10]	9A	12.6	0.15	1.6[7]	0.5[7]	1.5[7]	100	0	—	—	11.8	6.25K	3100	19.5	—	—
			6.3	0.3	1.6[8]	0.35[8]	1.5[8]	250	−8.5	—	—	10.5	7.7K	2200	17	—	—
12AV7	Medium-μ Dual Triode[10]	9A	12.6	0.225	3.1[7]	0.5[7]	1.9[7]	100	120*	—	—	9	6.1K	6100	37	—	—
			6.3	0.45	3.1[8]	0.4[8]	1.9[8]	150	56*	—	—	18	4.8K	8500	41	—	—
12AW6	Sharp Cut-off Pent.	7CM	12.6	0.15	6.5	1.5	0.025	250	200*	150	2	7	800K	5000	42	—	—
12AX7A	High-μ Dual Triode A_1 Amp.[10]	9A	12.6	0.15	1.6[7]	0.46[7]	1.7[7]	250	−2	—	—	1.2	62.5K	1600	100	—	—
	High-μ Dual Triode Class B		6.3	0.3	1.6[8]	0.34[8]	1.7[8]	300	0	—	—	40[2]	—	—	14[5]	16K[6]	7.5
12AY7	Medium-μ Dual Triode[10] A_1 Amp.	9A	12.6	0.15	1.3	0.6	1.3	250	−4	—	—	3	—	1750	40	—	—
	Medium-μ Dual Triode[10] Low-Level Amp.		6.3	0.3				150	2700*	Plate resistor = 20K. Grid resistor = 0.1 meg. V. G. = 12.5							
12AZ7A‡	High-μ Dual Triode[10]	9A	12.6	0.225	3.1[7]	0.5[7]	1.9[7]	100	270*	—	—	3.7	15K	4000	60	—	—
			6.3	0.45	3.1[8]	0.4[8]	1.9[8]	250	200*	—	—	10	10.9K	5500	60	—	—
12B4A‡	Low-μ Triode	9AG	12.6	0.3	5	1.5	4.8	150	−17.5	—	—	34	1.03K	6300	6.5	—	—
			6.3	0.6													
12BH7A‡	Medium-μ Dual Triode[10]	9A	12.6	0.3	3.2[7]	0.5[7]	2.6[7]	250	−10.5	—	—	11.5	5.3K	3100	16.5	—	—
			6.3	0.6	3.2[8]	0.4[8]	2.6[8]										
12BL6	Sharp Cut-off Pent.	7BK	12.6	0.15	5.5	4.8	0.006	12.6	−0.65	12.6	0.0005	1.35	500K	1350	—	—	—
12BR7A‡	Dual Diode — Medium-μ Triode	9CF	12.6	0.225	2.8	1	1.9	100	270*	—	—	3.7	15K	4000	60	—	—
			6.3	0.45				250	200*	—	—	10	10.9K	5500	60	—	—
12BV7	Sharp Cut-off Pent.	9BF	12.6	0.3	11	3	0.055	250	68*	150	6	25	90K	12K	1100	—	—
			6.3	0.6													
12BX6	Pentode	9AQ	12.6	0.15	7.5	3.3	0.007	200	−2.5	200	2.6	10	550K	7100	—	—	—
12BY7A‡	Sharp Cut-off Pent.	9BF	12.6	0.3	11.1	3	0.055	250	68*	150	6	25	90K	12K	1200	—	—
			6.3	0.6													
12BZ7	High-μ Dual Triode[10]	9A	12.6	0.3	6.5[7]	0.7[7]	2.5[7]	250	−2	—	—	2.5	31.8K	3200	100	—	—
			6.3	0.6	6.5[8]	0.55[8]	2.5[8]										
12CN5	Pentode	7CV	12.6	0.45	—	—	0.25	12.6	0	12.6	0.35	4.5	40K	3800	—	—	—
12CT8	Medium-μ Triode	9DA	12.6	0.3	2.4	0.19	2.2	150	−6.5	—	—	9	8.2K	4400	40	—	—
	Sharp Cut-off Pent.				7.5	2.4	0.044	200	−8	125	3.4	15	150K	7000	—	—	—
12CX6	Sharp Cut-off Pent.	7BK	12.6	0.15	7.6	6.2	0.05	12.6	0	12.6	1.4	3	40K	3100	—	—	—
12DE8	Diode — Remote Cut-off Pent.	Fig. 81	12.6	0.2	5.5	5.7	0.006	12.6	−0.8	12.6	0.5	1.3	300K	1500	—	—	—
12DK7	Dual Diode — Tetrode	9HZ	12.6	0.5	—	—	—	12.6	0	12.6	1	6	4K	5000	—	3.5K	0.01
12DL8	Dual Diode — Tetrode	9HR	12.6	0.55	12	1.3	—	12.6	−0.5	12.6**	75**	40	480	15K	7.2	—	—
12DM7	Twin Triode	9A	6.3	0.26	1.6	0.39	1.7	100	−1.0	—	—	0.5	80K	1250	100	—	—
			12.6	0.13													
12DQ7	Beam Pwr. Pent.	9BF	12.6	0.3	10	3.8	0.1	330	—	180	5.6	26	53K	10.5K	—	—	—
			6.3	0.6													
12DS7	Dual Diode	9JU	12.6	0.4	Max. ac voltage = 16. Max. dc output current = 5 mA.												
	Pwr. Tetrode				—	—	—	16	—	16	75	40	480	15K	7.2	800	.04
12DT6	Pentode	7EN	12.6	0.15	—	—	—	150	−4.5	100	2.1	1.1	150K	—	—	—	—
12DT7	High-μ Dual Triode	9A	12.6	0.15	1.6	0.46	1.7	300	−2	—	—	1.2	62.5K	1600	100	—	—
			6.3	0.3	1.6	0.34	1.7										
12DU7	Dual Diode	9JX	12.6	0.275	Max. average diode current = 1.0 mA.												
	Tetrode				11	3.6	0.6	16	—	16	1.5	12	6K	6200	—	2.7K	.025
12DV7	Dual Diode	9JY	12.6	0.15	Max. average diode current = 1.0 mA.												
	Triode				1.3	0.38	1.6	16	—	—	—	0.4	19K	750	14	—	—
12DV8	Dual Diode — Tetrode	9HR	12.6	0.375	9.0	1.0	12	12.6	18*	—	—	6.8[2]	—	—	7.6	1250	.005
12DW7	Double Triode	9A	12.6	0.15	1.6	0.44	1.7	250	−2	—	—	1.2	62.5K	1600	100	—	—
			6.3	0.30	1.7	0.4	1.5	250	−8.5	—	—	10.5	7.7K	2200	17	—	—
12DW8	Diode	9JC	12.6	0.45	1.6[7]	0.7	1.8	16	0	—	—	1.9[7]	—	2700	9.5	—	—
	Dissimilar Dual Triode				4.4[8]	0.7[8]	3.2					7.5[8]	—	6500	6.4	—	—
12DY8	Sharp Cut-off Triode	9JD	12.6	0.35	2	2	1.5	16	0	—	—	1.2	10K	2000	20	—	—
	Tetrode				11	3	0.74	16	—	12.6	2	14	5K	6000	—	—	—
12DZ6	Pwr. Amp. Pent.	7BK	12.6	0.175	12.5	8.5	0.25	12.6	—	12.6	2.2	4.5[2]	25K	3800	—	—	—
12EA6	RF Pent.	7BK	12.6	0.175	11	4	0.04	12.6	−3.4	12.6	1.4	3.2[2]	32K	3800	—	—	—
12EC8	Medium-μ Triode	9FA	12.6	0.225	2.6	0.4	1.7	16	−2.2	—	—	2.4	6K	4700	25	—	—
	Pent.				4.6	2.6	0.02	16	−1.6	12.6	—	0.66	750K	2000	—	—	—
12ED5‡	Pwr. Amp. Pent.	7CV	12.6	0.45	14	8.5	0.26	150	−4.5	150	11	36[2]	14K	8500	—	—	1.5
12EG6	Dual Control Heptode	7CH	12.6	0.15	—	—	—	30	—	12.6	2.4	0.4	150K	800	—	—	—
12EK6	Rf Pent.	7BK	12.6	0.2	10	5.5	0.032	12.6	−4.0	12.6	2	4.4	40K	4200	—	—	—

TABLE I—MINIATURE RECEIVING TUBES—*Continued*

Type	Name	Base	Fil. or Heater V	Fil. or Heater Amp.	Capacitances pF C_{in}	Capacitances pF C_{out}	Capacitances pF C_{gp}	Plate Supply V	Grid Bias	Screen Volts	Screen mA	Plate mA	Plate Res. Ohms.	Transconductance[11]	Amp. Factor[1]	Load Res. Ohms	Watts Output
12EL6	Dual Diode — High-μ Triode	7FB	12.6	0.15	2.2	1	1.8	12.6	0	—	—	0.75	45K	1200	55	—	—
12EM6	Diode — Tetrode	9HV	12.6	0.5	—	—	—	12.6	0	12.6	1	6	4K	5000	—	—	—
12F8	Dual Diode — Remote Cut-off Pent.	9FH	12.6	0.15	4.5	3	0.06	12.6	0	12.6	0.38	1	333K	1000	—	—	—
12FK6	Dual Diode — Low-μ Triode	7BT	12.6	0.15	1.8	0.7	1.6	16	0	—	—	1.3	6.2K	1200	7.4	—	—
12FM6	Dual Diode — Med.-μ Triode	7BT	12.6	0.15	2.7	1.7	1.7	30	0	—	—	1.8	5.6K	2400	13.5	—	—
12FQ8	Twin Double Plate Triode	9KT	12.6	0.15	1.7	0.27	0.9	250	−1.5	—	—	1.5	76K	1250	95	—	—
12FR8	Pentode	9KU	12.6	0.32	8.5	5.5	0.15	12.6	−0.8	12.6	0.7	1.9	400K	2700	—	—	—
	Triode — Diode				2.6	2.0	1.7	12.6	−0.6	—	—	1.0	—	1200	10	—	—
12FT6	Dual Diode — Triode	7BT	12.6	0.15	1.8	1.1	2.0	30	0	—	—	2	7.6K	1900	15	—	—
12FX5	Beam Pwr. Pent.	7CV	12.6	0.45	17	9	0.6	110	62*	115	12	35	—	—	—	3.0K	1.3
12FX8A	Triode	9KV	12.6	0.27	2.2	0.25	1.3	12.6	—	—	—	0.29	—	1400	10	—	—
	Heptode				—	—	—	12.6	1.6	—	—	1.3	500K	—	—	—	—
12GA6	Heptode	7CH	12.6	0.15	5.0	13	0.05	12.6	0	12.6	0.80	0.30	1 meg.	140	—	—	—
12H4	General Purpose Triode	7DW	12.6	0.15	2.4	0.9	3.4	90	0	—	—	10	—	3000	20	—	—
			6.3	0.3				250	−8	—	—	9	—	2600	20	—	—
12J8	Dual Diode — Tetrode	9GC	12.6	0.325	10.5	4.4	0.7	12.6	0	12.6	1.5	12[5]	6K	5500	—	2.7K	0.02
12K5	Tetrode (Pwr. Amp. Driver)	7EK	12.6	0.45	—	—	—	12.6	−2	12.6**	85**	8	800	7000	5.6	800	0.035
12R5‡	Beam Pwr. Pent.	7CV	12.6	0.6	13	9	0.55	110	−8.5	110	3.3	40	13K	7000	—	—	—
12U7	Dual Medium-μ Triode[10]	9A	12.6	0.15	1.6[7,8]	0.4[7]	1.5[7,8]	12.6	0	—	—	1	12.5K	1600	20	—	—
18FW6A‡	Remote Cut-off Pent.	7CC	18	0.1	5.5	5	0.0035	150	—	100	4.4	11	250K	4400	—	—	—
18FX6A‡	Dual Control Heptode	7CH	18	0.1	—	—	—	150	—	—	—	2.3	400K	—	—	—	—
18FY6A‡	High-μ Triode — Diode	7BT	18	0.1	2.4	0.22	1.8	150	−1	—	—	0.6	77K	1300	100	—	—
25F5	Beam Pwr. Pent.	7CV	25	0.15	12	6	0.57	110	−7.5	110	3/7	36/37	16K	5800	—	2.5K	1.2
32ET5	Beam Pwr. Pent.	7CV	32	0.1	12	6	0.6	150	−7.5	130	—	—	21.5K	5500	—	2.8K	1.2
34GD5	Beam Pwr. Pent.	7CV	34	0.1	12	6	0.6	110	−7.5	110	3	35	13K	5700	—	2.5K	1.4
35B5	Beam Pwr. Amp.	7BZ	35	0.15	11	6.5	0.4	110	−7.5	110	3/7	41[7]	—	5800	40[5]	2.5K	1.5
50B5	Beam Pwr. Amp.	7BZ	50	0.15	13	6.5	0.5	110	−7.5	110	4/8.5	50[2]	14K	7500	49[5]	2.5K	1.9
50FK5	Pwr. Pent.	7CV	50	0.1	17	9	0.65	110	62*	115	12	32	14K	12.8K	—	3K	1.2
1218A	Uhf Triode	7DK	6.3	0.225	2.9	0.25	1.7	200	100*	—	—	18	—	10.75K	55	—	—
5686	Beam Pwr. Pent.	9G	6.3	0.35	6.4	8.5	0.11	250	−12.5	250	3[5]	27[5]	45K	3100	—	9K	2.7
5687	Medium-μ Dual Triode[10]	9H	12.6	0.45	4[7]	0.6[7]	4[7]	120	−2	—	—	36	1.7K	11K	18.5	—	—
			6.3	0.9	4[8]	0.5[8]	4[8]	250	−12.5	—	—	12.5	3K	5500	16.5	—	—
5722	Noise Generating Diode	5CB	6.3	1.5	—	2.2	—	200	—	—	—	35	—	—	—	—	—
5842/417A	High-μ Triode	9V	6.3	0.3	9.0	1.8	0.55	150	62*	—	—	26	1.8K	24K	43	—	—
5879	Sharp Cut-off Pent.	9AD	6.3	0.15	2.7	2.4	0.15	250	−3	100	0.4	1.8	2 meg.	1000	—	—	—
6386	Medium-μ Dual Triode[10]	8CJ	6.3	0.35	2	1.1	1.2	100	200*	—	—	9.6	4.25K	4000	17	—	—
6887	Dual Diode	6BT	6.3	0.2	Max. peak inverse plate voltage = 360 V. Max. dc plate current each diode = 10 mA.												
6973	Pwr. Pentode	9EU	6.3	0.45	6	6	0.4	440	−15	300	—	—	73K	4800	—	—	—
7189A	Pwr. Pentode	9CV	6.3	0.76	10.8	6.5	0.5	250	−7.3	250	5.5	48	40K	11.3K	—	—	—
7258	Sharp Cut-off	9DA	12.6	0.195	7	2.4	0.4	330	—	125	3.8	12	170K	7800	—	—	—
	Medium-μ Triode				2	0.26	1.5	330	−3	—	—	15	4.7K	4500	21	—	—
7586	Medium-μ Triode	12AQ	6.3	0.135	4.2	1.6	2.2	75	100*	—	—	10.5	3000	11.5K	35	—	—
7587	Sharp Cut-off Tet.	12AS	6.3	0.15	6.5	1.4	0.01	125	68*	50	2.7	10	200K	10.5K	—	—	—
7895	High-μ Triode	12AQ	6.3	0.135	4.2	1.7	0.9	110	0	—	—	7	6800	9400	64	—	—
8056	Medium-μ Triode	12AQ	6.3	0.135	4.0	1.7	2.1	12	0	—	—	5.8	1.6K	8000	12.5	—	—
8058	High-μ Triode	12CT	6.3	0.135	6.0	0.046	1.3	110	47*	—	—	10	—	10K	—	—	—
8393	Medium-μ Triode	12AQ	13.5	0.060	4.4	1.7	2.4	75	100*	—	—	10.5	3000	11.5K	35	—	—
8628	High-μ Triode	12AQ	6.3	0.10	10	3.4	1.7	150	3.3K*	—	—	0.3	41K	3100	127	7K	—
8677	Power Triode	12CT	6.3	0.15	6.0	1.2	—	180	1.2K*	—	—	20	3K	5400	70	—	1.4
9001	Sharp Cut-off Pent.	7BD	6.3	0.15	3.6	3	0.01	250	−3	100	0.7	2	1 meg.	1400	—	—	—
9002	Uhf Triode	7BS	6.3	0.15	1.2	1.1	1.4	250	−7	—	—	6.3	11.4K	2200	25	—	—
9003	Remote Cut-off Pent.	7BD	6.3	0.15	3.4	3	0.1	250	−3	100	2.7	6.7	700K	1800	—	—	—
9006	Uhf Diode	6BH	6.3	0.15	Max. ac voltage = 270. Max. dc output current = 5 mA.												

‡ Controlled heater warm-up characteristic.
Ω Oscillator gridleak or screen-dropping resistor ohms.
* Cathode resistor ohms.
** Space-charge grid.

[1] Per Plate.
[2] Maximum-signal current for full-power output.
[3] Values are for two tubes in push-pull.
[4] Unless otherwise noted.
[5] No signal plate mA.
[6] Effective plate-to-plate.
[7] Triode No. 1.
[8] Triode No. 2.
[9] Oscillator grid current mA.
[10] Values for each section.
[11] Micromhos.
[12] Through 33K.

TABLE II—METAL RECEIVING TUBES

Characteristics given in this table apply to all tubes having type numbers shown, including metal tubes, glass tubes with "G" suffix, and bantam tubes with "GT" suffix.
For "G" and "GT"-tubes not listed (not having metal counterparts), see Tables III, IV and VI.

Type	Name	Base	Fil. or Heater V	Fil. or Heater Amps.	Capacitances pF C_{in}	Capacitances pF C_{out}	Capacitances pF C_{gp}	Plate Supply V	Grid Bias	Screen Volts	Screen mA	Plate mA	Plate Res. Ohms	Transconductance[12]	Amp. Factor[13]	Load Res. Ohms	Watts Output
6A8	Pentagrid Conv.	8A	6.3	0.3	—	—	—	250	−3	100	2.7	3.5	360K	550	—	—	—
								E_{bb} (Osc.) 250 V through 20K. Grid resistor (Osc.) 50K. I_b = 4 mA. I_{g1} = 0.4 mA.									
6AC7 1852	Sharp Cut-off Pent.	8N	6.3	0.45	11	5	0.15	300	160*	150	2.5	10	1 meg.	9000	—	—	—
								300	160*	60K[6]	2.5	10	1 meg.	9000	—	—	—
6AG7	Pwr. Amp. Pent.	8Y	6.3	0.65	13	7.5	0.06	300	3	150	7/9	30/31	130K	11K	—	10K	3
6B8	Dual-Diode — Pent.	8E	6.3	0.3	6	9	0.005	250	−3	125	2.3	10	600K	1325	—	—	—
6F6	Pwr. Amp. Pent. — A_1 Amp.[1,5]	7S	6.3	0.7	6.5	13	0.2	250	20	20[10]	—	31/34	2.6K	2600	6.8	4K	0.85
	AB_2 Amp.[1,6]							350	730*	132[11]	—	50/60	—	—	—	10K[7]	9
								350	−38	123[11]	—	48/92	—	—	—	6K[7]	13
	A_1 Amp.[5]							250	−16.5	250	6/11	34/36	80K	2500	—	7K	3.2
								285	−20	285	7/13	38/40	78K	2500	—	7K	4.8
	AB_2 Amp.[6]							375	26	250	5/20	34/82	—	—	82[11]	10K[7]	18.5
								375	340*	250	8/18	54/77	—	—	94[11]	10K[7]	19
6J5	Medium-μ Triode	6Q	6.3	0.3	3.4	3.6	3.4	250	−8	—	—	9	7.7K	2600	20	—	—
6J7	Sharp Cut-off Pent. — A_1 Amp.	7R	6.3	0.3	7	12	0.005	250	−3	100	0.5	2	1 meg.	1225	—	—	—
	Biased Detector							250	10K*	100	Zero signal cathode current = 0.43 mA.				0.5 meg.		
6K7	Variable-μ Pent. — R.f. Amp.	7R	6.3	0.3	7	12	0.005	250	−3	125	2.6	10.5	600K	1650	990	—	—
	Mixer							250	−10	100	Dsc. peak volts = 7						
6K8	Triode — Hexode Conv. — Hexode	8K	6.3	0.3	—	—	—	250	−3	100	6	2.5	600K	350	—	—	—
	Triode							100	50K[8]	—	—	3.8		I_{g2} (Osc.) = 0.15 mA.			
6L6-GB[2]	Beam Pwr. Amp. — A_1 Amp.[1,5]	7AC	6.3	0.9	11.5	9.5	0.9	250	−20	20[10]	—	40/44	1.7K	4700	8	5K	1.4
	A_1 Amp.[5] Self Bias							250	167*	250	5.4/7.2	75/78	—	—	14[10]	2.5K	6.5
								300	218*	200	3/4.6	51/55	—	—	12.7[10]	4.5K	6.5
	A_1 Amp.[5] Fixed Bias							250	−14	250	5/7.3	72/79	22.5K	6000	14[10]	2.5K	6.5
								350	−18	250	2.5/7	54/66	33K	5200	18[10]	4.2K	10.8
	A_1 Amp.[6] Self Bias							250	125*	250	10/15	120/130	—	—	35.6[11]	5K[7]	13.8
								270	125*	270	11/17	134/145	—	—	28.2[11]	5K[7]	18.5
	A_1 Amp.[6] Fixed Bias							250	−16	250	10/16	120/140	24.5[5]	5500[5]	32[11]	5K[7]	14.5
								270	−17.5	270	11/17	134/155	23.5[5]	5700[5]	35[11]	5K[7]	17.5
	AB_1 Amp.[6] Self Bias							360	270*	270	5/17	88/100	—	—	40.6[11]	9K[7]	24.5
	AB_1 Amp.[6] Fixed Bias							360	−22.5	270	5/11	88/140	—	—	45[11]	3.8K[7]	18
								360	−22.5	270	5/15	88/132	—	—	45[11]	6.6K[7]	26.5
	AB_2 Amp.[6] Fixed Bias							360	−18	225	3.5/11	78/142	—	—	52[11]	6K[7]	31
								360	−22.5	270	5/16	88/205	—	—	72[11]	3.8K[7]	47
6L7	Pentagrid — Mixer Amp. — A_1 Amp.	7T	6.3	0.3	—	—	—	250	−3	100	6.5	5.3	600K	1100	−3[14]	—	—
	Mixer							250	−6	150	9.2	3.3	1 meg.	350	−15[14]	—	—
6N7GT	Class-B Twin Triode — B Amp.[9]	8B	6.3	0.8	—	—	—	300	0	—	—	35/70	—	—	82[11]	8K[7]	10
	A_1 Amp.[15]							250	−5	—	—	6	11.3K	3100	—	—	—
6Q7	Dual Diode — High-μ Triode	7V[2]	6.3	0.3	5	3.8	1.4	250	−3	—	—	1	58K	1200	70	—	—
6R7	Dual Diode — Triode	7V[2]	6.3	0.3	4.8	3.8	2.4	250	−9	—	—	9.5	8.5K	1900	16	10K	0.28
6SA7GT	Pentagrid Conv.	8R[2]	6.3	0.3	9.5	12	0.13	250	0[3]	100	8	3.4	800K	Grid No. 1 resistor 20K.			
6SB7Y	Pentagrid Conv.	8R	6.3	0.3	9.6	9.2	0.13	100	−1	100	10.2	3.6	50K	900	—	—	—
								250	−1	100	10	3.8	1 meg.	950	—	—	—
								250	22K[8]	12K[8]	12/13	6.8/6.5	Dsc. Section in 88—108 MHz. Service.				
6SC7	High-μ Dual Triode[5]	8S	6.3	0.3	2	3	2	250	−2	—	—	2	53K	1325	70	—	—
6SF5	High-μ Triode	6AB[2]	6.3	0.3	4	3.6	2.4	250	−2	—	—	0.9	66K	1500	100	—	—
6SF7	Diode — Variable-μ Pent.	7AZ	6.3	0.3	5.5	6	0.004	250	−1	100	3.3	12.4	700K	2050	—	—	—
6SG7	Hf Amp. Pent.	8BK	6.3	0.3	8.5	7	0.003	250	−2.5	150	3.4	9.2	1 meg.	4000	—	—	—
6SH7	Hf Amp. Pent.	8BK	6.3	0.3	8.5	7	0.003	250	−1	150	4.1	10.8	900K	4900	—	—	—
6SJ7[4]	Sharp Cut-off Pent.	8N	6.3	0.3	6	7	0.005	250	−3	100	0.8	3	1 meg.	1650	—	—	—
6SK7	Variable-μ Pent.	8N	6.3	0.3	6	7	0.003	250	−3	100	2.6	9.2	800K	2000	—	—	—
6SQ7GT	Dual Diode — High-μ Triode	8Q	6.3	0.3	3.2	3	1.6	250	−2	—	—	0.9	91K	1100	100	—	—
6SR7	Dual Diode — Triode	8Q	6.3	0.3	3.6	2.8	2.4	250	−9	—	—	9.5	8.5K	1900	16	—	—
6V6GTA	Beam Pwr. Amp. — A_1 Amp.[5]	7AC	6.3	0.45	10	11	0.3	180	−8.5	180	3/4	29/30	50K	3700	8.5[10]	5.5K	2
								250	−12.5	250	4.5/7	45/47	50K	4100	12.5[10]	5K	4.5
								315	−13	225	2.2/6	34/35	80K	3750	13[10]	8.5K	5.5
	AB_1 Amp.[6]							250	−15	250	5/13	70/79	60K	3750	30[11]	10K[7]	10
								285	−19	285	4/13.5	70/92	70K	3600	38[11]	8K[7]	14
1620	Sharp Cut-off Pent.	7R	6.3	0.3	7	12	0.005	250	−3	100	0.5	2	1 meg.	1225	—	—	—
5693	Sharp Cut-off Pent.	8N	6.3	0.3	5.3	6.2	0.005	250	−3	100	0.85	3	1 meg.	1650	—	—	—

* Cathode resistor-ohms.
[1] Screen tied to plate.
[2] No connection to Pin No. 1 for 6L6G, 6Q7G, 6RGT/G, 6S7G, 6SA7GT/G and 6SF5-GT.
[3] Grid bias = 2 volts if separate oscillator excitation is used.
[4] Also type 6SJ7Y.
[5] Values are for single tube or section.
[6] Values are for two tubes in push-pull.
[7] Plate-to-plate value.
[8] Dsc. grid leak — Scrn. res.
[9] Values for two units.
[10] Peak af grid voltage.
[11] Peak af G-G voltage.
[12] Micromhos.
[13] Unless otherwise noted.
[14] G_3 voltage.
[15] Units connected in parallel.

TABLE III – 6.3-VOLT GLASS TUBES WITH OCTAL BASES

(For "G" and "GT"-type tubes not listed here, see equivalent type in Tables II and VI; characteristics and connections will be similar)

Type	Name	Plate Dissipation (Watts)	Base	Fil. or Heater V	Fil. or Heater Amp.	Capacitances pF C_{in}	Capacitances pF C_{out}	Capacitances pF C_{gp}	Plate Supply V	Grid Bias	Screen Volts	Screen mA	Plate mA	Plate Res. Ohms	Transconductance[4]	Amp. Factor	Load Res. Ohms	Watts Output
6AL7GT	Electron-Ray Indicator	—	8CH	6.3	0.15	—	—	—	Outer edge of any of the three illuminated areas displaced 1/16 in. min. outward with +5 volts to its electrode. Similar inward disp. with −5 volts. No pattern with −6 volts grid.									
6AQ7GT	Dual Diode — High-μ Triode	—	8CK	6.3	0.3	2.8	3.2	3	250	−2	—	—	2.3	44K	1600	70	—	—
6AR6	Beam Pent.	—	6BQ	6.3	1.2	11	7	0.55	250	−22.5	250	5	77	21K	5400	—	—	—
6AR7GT	Dual Diode — Remote Pent.	—	7DE	6.3	0.3	5.5	7.5	0.003	250	−2	100	1.8	7	1.2 meg.	2500	—	—	—
6AS7GA	Low-μ Twin Triode — DC Amp.[1]	—	8BD	6.3	2.5	6.5	2.2	7.5	135	250*	—	—	125	0.28K	7000	2	—	—
6AU5GT	Beam Pwr. Amp.[3]	10	6CK	6.3	1.25	11.3	7	0.5	115	−20	175	6.8	60	6K	5600	—	—	—
6AV5GA	Beam Pwr. Amp.[3]	11	6CK	6.3	1.2	14	7	0.5	250	−22.5	150	2.1	55	20K	5500	—	—	—
6BG6GA	Beam Pwr. Amp.[3]	20	5BT	6.3	0.9	11	6	0.8	250	−15	250	4	75	25K	6000	—	—	—
6BL7GTA	Medium-μ Dual Triode[1]	—	8BD	6.3	1.5	4.4	0.9	6	250	−9	—	—	40	2.15K	7000	15	—	—
6BQ6GTB 6CU6	Beam Pwr. Amp.[3]	11	6AM	6.3	1.2	15	7	0.6	250	−22.5	150	2.1	57	14.5K	5900	—	—	—
6BX7GT	Dual Triode[1]	—	8BD	6.3	1.5	5	3.4	4.2	250	390*	—	—	42	1.3K	7600	10	—	—
6CB5A	Beam Pwr. Amp.[3]	26	8GD	6.3	2.5	22	10	0.4	175	−30	175	6	90	5K	8800	—	—	—
6CD6GA	Beam Pwr. Amp.[3]	20	5BT	6.3	2.5	24	9.5	0.8	175	−30	175	5.5	75	7.2K	7700	—	—	—
6CK4	Low-μ Triode	—	8JB	6.3	1.25	8	1.8	6.5	550	−26	—	—	55	1.0K	6500	6.7	—	—
6CL5	Beam Pwr. Amp.[3]	25	8GD	6.3	2.5	20	11.5	0.7	175	−40	175	7	90	6K	6500	—	—	—
6CU6	Beam Pwr. Amp.[3]	11	6AM	6.3	1.2	15	7	0.55	250	−22.5	150	2.1	55	20K	5500	—	—	—
6DG6GT	Beam Pwr. Amp.	—	7S	6.3	1.2	—	—	—	200	180*	125	8.5	47	28K	8000	—	4K	3.8
6DN6	Beam Pwr. Pent.[3]	15	5BT	6.3	2.5	22	11.5	0.8	125	−18	125	6.3	70	4K	9000	—	—	—
6DN7	Dissimilar Dual Triode	—	8BD	6.3	0.9	2.2	0.7	4	350	−8	—	—	8	9K	2500	22	—	—
						4.6	1	5.5	550	−9.5	—	—	68	2K	7700	15	—	—
6DQ5	Beam Pwr. Amp.[3]	24	8JC	6.3	2.5	23	11	0.5	175	−25	125	5	110	5.5K	10.5K	—	—	—
6DQ6B	Beam Pwr. Amp.[3]	18	6AM	6.3	1.2	15	7	0.55	250	−22.5	150	2.4	75	20K	6600	—	—	—
6DZ7	Twin Pwr. Pent.[1]	13.2	8JP	6.3	1.52	11	5	0.6	300	120*	250	15	80	—	—	—	9K[2]	12
6E5	Electron Ray — Triode	—	6R	6.3	0.3	—	—	—	250	—	—	—	—	—	—	—	—	—
6EA7	Dissimilar — Dual Triode	—	8BD	6.3	1.05	2.2	0.6	4	350	−3	—	—	1.5	34K	1900	65	—	—
						6	1.3	8	550	−25	—	—	95	770	6500	5	—	—
6EF6	Beam Pwr. Amp.[5]	—	7S	6.3	0.9	11.5	9	0.8	250	−18	250	2	50	—	5000	—	—	—
6EX6	Beam Pwr. Amp.[4]	22	5BT	6.3	2.25	22	8.5	1.1	175	−30	175	3.3	67	8.5K	7700	—	—	—
6EY6	Beam Pwr. Pent.	—	7AC	6.3	0.68	8.5	7	0.7	350	−17.5	300	3	44	60K	4400	—	—	—
6EZ5	Beam Pwr. Pent.	—	7AC	6.3	0.8	9	7	0.6	350	−20	300	3.5	43	50K	4100	—	—	—
6FH6	Beam Pwr. Pent.	—	6AM	6.3	1.2	33	8	0.4	770	−22.5	220	1.7	75	12K	6000	—	—	—
6GW6	Beam Power Amp.[3]	17.5	6AM	6.3	1.2	17	7	0.5	250	−22.5	150	2.1	70	15K	7100	—	—	—
6K6GT	Pwr. Amp. Pent.	—	7S	6.3	0.4	5.5	6	0.5	315	−21	250	4/9	25 28	110K	2100	—	9K	4.5
6S8GT	Triple-Diode — Triode	—	8CB	6.3	0.3	1.2	5	2	250	−2	—	—	—	91K	1100	100	—	—
6SD7GT	Semi-Remote Pent.	—	8N	6.3	0.3	9	7.5	0.0035	250	−2	125	3	9.5	700K	4250	—	—	—
6SL7GT	High-μ Dual Triode[1]	—	8BD	6.3	0.3	3.4	3.8	2.8	250	−2	—	—	2.3	44K	1600	70	—	—
6SN7GTB	Medium-μ Dual Triode[1]	—	8BD	6.3	0.6	3	1.2	4	250	−8	—	—	9	7.7K	2600	20	—	—
6W6GT	Beam Pwr. Amp.	—	7S	6.3	1.2	15	9	0.5	200	180*	125	2/8.5	46 47	28K	8000	—	4K	3.8
6Y6GA	Beam Pwr. Amp.	—	7S	6.3	1.25	15	1	0.7	200	−14	135	2.2 9	61 66	18.3K	7100	—	2.6K	6
1635	High-μ Dual Triode	—	8B	6.3	0.6	—	—	—	300	0	—	—	6.6 54	—	—	—	12K[2]	10.4
6550	Power Pentode	35	7S	6.3	1.6	14	12	0.85	400	−16.5	225	18	105	27K	9000	—	3K	20
7027A	Beam Pwr. Amp.	—	8HY	6.3	0.9	10	7.5	1.5	450	−30	350	19.2	194	—	6000	—	6K[2]	50
7591	Beam Pwr. Amp.	19	8KQ	6.3	0.8	10	5	0.25	450	200*	400	22	94	—	—	—	9K[2]	28

* Cathode resistor-ohms.
[1] Per section.
[2] Plate-to-plate value.
[3] Horz. Deflection Amp.
[4] Micromhos.
[5] Vert. Deflection Amp.

TABLE IV – SPECIAL RECEIVING TUBES

Type	Name	Plate Dissipation (Watts)	Base	Fil. or Heater V	Fil. or Heater Amp.	Capacitances pF C_{in}	Capacitances pF C_{out}	Capacitances pF C_{gp}	Plate Supply V	Grid Bias	Screen Volts	Screen mA	Plate mA	Plate Res. Ohms	Transconductance[1]	Amp. Factor	Probable Freq. Limit[2] (MHz)	Watts Output
6AV11	Triple Triode	—	12BY	6.3	0.6	1.9	1.5	1.2	250	−8.5	—	—	10.5	7.7K	2200	17	—	—
6B10	Dual Triode	—	12BF	6.3	0.6	—	—	—	250	−8	—	—	10	7.2K	2500	18	—	—
	Dual Diode					Diode current for continuous operation = 5 mA.												
6BW11	Dual Pent. Pent. 1	4.0	12HD	6.3	0.8	7.5	2.8	0.03	125	56*	125	4.8	22	120K	8500	—	—	—
	Dual Pent. Pent. 2	3.1				12	2.8	0.03	125	56*	125	3.8	11	200K	13K			
6C10	Triple Triode	—	12BQ	6.3	0.6	1.6	0.3	1.7	250	−2	—	—	1.2	62.5K	1600	100	—	—
6D10	Triple Triode	—	12BQ	6.3	0.45	2.2	0.5	1.5	125	−1	—	—	4.2	13.6K	4200	57	—	—
6EW7	Dissimilar Dual Triode	—	9HF	6.3	0.9	2.2	0.4	4.2	250	−11	—	—	5.5	8.75K	2000	17.5	—	—
						7.0	1.2	9.0	150	−17.5	—	—	45	800	7500	6	—	—
6F4	Acorn Triode	—	7BR	6.3	0.225	2	0.6	1.9	80	150*	—	—	13	2.9K	5800	17	—	—
6FJ7	Dissimilar Dual Triode	—	12BM	6.3	0.9	2.2	0.48	3.8	250	−8	—	—	8	9K	2500	22.5	—	—
		—				4.0	0.54	5.0	250	−9.5	—	—	41	2K	7700	15.4	—	—
6GE5	Beam Pwr. Pent.	17.5	12BJ	6.3	1.2	16	7	0.34	250	−22.5	150	1.8	65	18K	7300			—
6GJ5	Class C Amp.	22	9NM	6.3	1.2	15	6.5	0.26	500	−75	200	14.9	180	—	—	—	150	62.3
	Class AB_1								500	−43	200	3.8	30 85	—	—	—	150	35[3]
6GT5	Beam Pwr. Pent.	17.5	9NZ	6.3	1.2	15	6.5	0.26	250	−22.5	150	2.1	70	15K	7100	—	—	—
6HB5	Beam Pwr. Pent.	18	12BJ	6.3	1.5	22	9.0	0.4	130	−20	130	1.75	50	11K	9100	—	—	—
6HF5	Class C Amp.	35	12FB	6.3	2.25	24	10	0.56	500	−85	140	12.5	232	—	—	—	60	77
	Class AB_1								500	−46	140	4.5	40/133	—	—	—	60	57.6[3]
6J11	Twin Pentode	—	12BW	6.3	0.8	11	2.8	0.04	125	56*	125	3.8	11	200K	13K	—	—	—

TABLE IV — SPECIAL RECEIVING TUBES — *Continued*

Type	Name	Plate Dissipation Watts	Base	Fil. or Heater V	Fil. or Heater Amp.	Capacitances pF C_{in}	Capacitances pF C_{out}	Capacitances pF C_{gp}	Plate Supply V	Grid Bias	Screen Volts	Screen mA	Plate mA	Plate Res. Ohms	Transconductance[2]	Amp. Factor	Probable Freq. Limit[2] (MHz)	Watts Output
6JB6	Class C Amp.	22	9QL	6.3	1.2	15	6.0	0.2	500	−75	200	13.3	180	—	—	—	145	62.7
	Class AB								500	−42	200	4.2	30/85	—	—	—	145	35[3]
6JE6	Class C Amp.	30	9QL	6.3	2.5	21	11	0.44	500	−85	125	17.2	222	—	—	—	60	76.3[3]
	Class AB								500	−44	125	3.9	40/110	—	—	—	60	46.8[3]
6JE6A	Beam Power Amp.	30	9QL	6.3	2.5	22	11	0.56	175	−35	145	2.4	95	7K	7500	—	—	—
6K11	Triple Triode	—	12BY	6.3	0.6	1.9	1.8	1.3	250	−8.5	—	—	10.5	7.7K	2200	17	—	—
		—				1.8	0.7	1.3	250	−2.0	—	—	1.2	62.5K	1600	100	—	—
						1.8	1.8	1.3	250	−2.0	—	—	1.2	62.5K	1600	100	—	—
6KD6	Beam Pwr. Pent.	33	12GW	6.3	2.85	—	—	—	150	−22.5	110	1.8	120	6K	14K	—	—	—
6JF6	Beam Pwr. Pent.	17	9QL	6.3	1.6	22	9	1.2	130	−20	125	2.5	80	12K	10K	—	—	—
6KM6	Beam Power Amp.	20	9QL	6.3	1.6	22	9.0	1.2	140	−24.5	140	2.4	80	6K	9500	—	—	—
6L4	Acorn Triode		7BR	6.3	0.225	1.8	0.5	1.6	80	150*	—	—	9.5	4.4K	6400	28	—	—
6LF6	Beam Power Pent.	40	12GW	6.3	2	37	18.5	2.5	700	0	160	45	—	—	—	—	—	—
6LQ6	Beam Pwr. Pent.	30	9QL	6.3	2.5	22	11	0.56	175	−35	145	2.4	95	7K	7500	—	—	—
6M11	Twin Triode	—	12CA	6.3	0.77	3.4	0.8	1.8	125	120*	—	—	8	10K	8K	58	—	—
	Pentode	—				12	2.8	0.03	125	56*	125	3.4	11	200K	13K	—	—	—
6Q11	Triple Triode	—	12BY	6.3	0.6	1.9	1.7	1.8	150	0	—	—	22	7K	2500	18	—	—
		—				1.8	0.6	2.0	250	−2	—	—	1.2	62.5K	1600	100	—	—
						1.8	1.7	2.0	250	−2	—	—	1.2	62.5K	1600	100	—	—
6T9	Triode	1.5	12FM	6.3	0.93	3.4	1.1	2.6	250	−2.0	—	—		45K	2100	95		—
	Pentode	12				11	11	0.2	250	−8.0	250	7	39	100K	6500	—	—	4.2
7E5/1201	Hf Triode		8BN	6.3	0.15	3.6	2.8	1.5	180	−3	—	—	5.5	12K	3000	36	—	—
12GJ5	Beam Pwr. Pent.	17.5	9NM	12.6	0.6	15	6.5	0.26	250	−22.5	150	2.1	70	15K	7100	—	—	—
954	Detector Amp. — Pentode (Acorn) A_1 Amp. / Detector	—	5BB	6.3	0.15	3.4	3	0.007	250	−3	100	0.7	2	1 meg.	1400	—	—	—
									250	−6	100	I_b adjusted to 0.1 mA. with no signal.					—	—
955	Medium-μ Triode (Acorn)	—	5BC	6.3	0.15	1	0.6	1.4	250	−7	—	—	6.3	11.4K	2200	25	—	—
									90	−2.5	—	—	2.5	14.7K	1700	25	—	—
956	Remote Cut-off Pent. (Acorn) A_1 Amp. / Mixer	—	5BB	6.3	0.15	3.4	3	0.007	250	−3	100	2.7	6.7	700K	1800	—	—	—
									250	−10	100		Oscillator peak volts −7 min.				—	—
958A	Medium-μ Triode (Acorn)		5BD	1.25	0.1	0.6	0.8	2.6	135	−7.5	—	—	3	10K	1200	12	—	—
959	Sharp Cut-off Pent. (Acorn)	—	5BE	1.25	0.05	1.8	2.5	0.015	135	−3	67.5	0.4	1.7	800K	600	—	—	—
6173	Uhf "Pencil" Diode	—	Fig. 34	6.3	0.135	Plate to K = 1.1			Peak inverse −375 Volts. Peak I_p −50 mA. Max. dc output −5.5 mA.									—
7077	Ceramic Uhf Triode	—	—	6.3	0.24	1.9	0.01	1.0	250	−5	—	—	6.4	8.9K	9000	—	—	—
7360	Beam Deflection	—	9KS	6.3	0.35	—	—	—	For Practical Circuits See Chap. 11									
7695	Beam Pwr. Pent.	16	9PX	50	0.15	14	9	0.75	140	100*	140	14	100	—	—	—	—	4.5
7868	Pwr. Pent.	19	9NZ	6.3	0.8	11	4.4	0.15	300	−10	300	15	75	29K	10.2K	—	—	11

* Cathode resistor-ohms [1] Micromhos. [2] 75% of Self-Resonant Frequency. [3] ICAS 30 MHz.

TABLE V — CONTROL AND REGULATOR TUBES

Type	Name	Base	Cathode	Fil. or Heater Volts	Fil. or Heater Amp.	Peak Anode Voltage	Max. Anode mA	Minimum Supply Voltage	Operating Voltage	Operating mA	Grid Resistor	Tube Voltage Drop
0A2 6073	Voltage Regulator	5BD	Cold	—	—	—	—	185	150	5–30	—	—
0A3A/VR75	Voltage Regulator	4AJ	Cold	—	—	—	—	105	75	5–40	—	—
0A4G 1267	Gas Triode Starter-Anode Type	4V 4V	Cold	—	—	With 105–120-volt ac anode supply, peak starter-anode ac voltage is 70 peak rf voltage 55. Peak dc mA = 100. Average dc mA = 25.						
0A5	Gas Pentode	Fig. 19	Cold	—	—	Plate −750 V, Screen −90 V, Grid +3 V, Pulse −85 V						
0B2 6074	Voltage Regulator	5BD	Cold	—	—	—	—	133	108	5–30	—	—
0B3/VR90	Voltage Regulator	4AJ	Cold	—	—	—	—	125	90	5–40	—	—
0C2	Voltage Regulator	5BD	Cold	—	—	—	—	105	75	5–30	—	—
0C3A/VR105	Voltage Regulator	4AJ	Cold	—	—	—	—	135	105	5–40	—	—
0D3A/VR150	Voltage Regulator	4AJ	Cold	—	—	—	—	185	150	5–40	—	—
2D21	Grid-Controlled Rectifier Relay Tube	7BN	Htr.	6.3	0.6	650	500	—	650	100	0.1–10[4]	8
						400	—	—	—	—	1.0[4]	—
6D4	Control Tube	5AY	Htr.	6.3	0.25	Ep = 350; Grid volts = −50; Avg. mA = 25; Peak mA = 100; Voltage drop = 16.						
90C1	Voltage Regulator	5BD	Cold	—	—	—	—	125	90	1–40	—	—
884	Gas Triode Grid Type	6Q	Htr.	6.3	0.6	300	300	—	—	2	25000	—
						350	300	—	—	75	25000	—
967	Grid-Controlled Rectifier	3G	Fil.	2.5	5.0	2500	500	-5[2]	—	—	—	10–24
1265	Voltage Regulator	4AJ	Cold	—	—	—	—	130	90	5–30	—	—
1266	Voltage Regulator	4AJ	Cold	—	—	—	—	—	70	5–40	—	—
1267	Relay Tube	4V	Cold	—	—	Characteristics same as 0A4G						
2050	Grid-Controlled Rectifier	8BA	Htr	6.3	0.6	650	500	—	—	100	0.1–10[4]	8
5651	Voltage Regulator	5BD	Cold	—	—	115	—	115	87	1.5–3.5	—	—
5662	Thyratron — Fuse	Fig. 19	Htr.	6.3	1.5	200[3]	I_k to fuse — 150 Amp., 60 cycle, half-wave					50 V
5696	Relay Service	7BN	Htr.	6.3	0.15	500[3]	100 ma. peak current; 25-ma. average.					
5727	Gas Thyratron	7BN	Htr.	6.3	0.6	650	—	—	—	—	—	—
5823	Relay or Trigger	4CK	Cold	—	—	Max. peak inv. volts = 200; Peak mA = 100; Avg. mA = 25.						
5962	Voltage Regulator	2AG	Cold	—	—	—	—	730	700	5/55[5]	—	—
5998	Series Regulator	8BD	Htr.	6.3	2.4	250	125	—	110	100	350[6]	—
6308	Voltage Regulator	8EX	Cold	—	—	—	3.5	115	87	—	—	—
6336A	Twin Triode Series-Regulator	8BD	Htr.	6.3	5.0	Ep = 400; Ip 400 mA; Grid volts = − 300						
6354	Voltage Regulator	Fig. 12	Cold	—	—	—	—	180	150	5–15	—	—
KY21	Grid-Controlled Rectifier	—	Fil.	2.5	10.0	—	—	—	3000	500	—	—
RK61	Radio-Controlled Relay	—[1]	Fil.	1.4	0.05	45	1.5	30	—	0.5–1.5	3[4]	30

[1] No base. Tinned wire leads.
[2] At 1000 anode volts.
[3] Peak inverse voltage.
[4] Megohms.
[5] Values in microamperes.
[6] Cathode resistor-ohms.

TABLE VI — RECTIFIERS — RECEIVING AND TRANSMITTING

See Also Table V — Controls and Regulator Tubes

Type	Name	Base	Cathode	Fil. or Heater Volts	Fil. or Heater Amp.	Max. AC Voltage Per Plate	DC Output Current mA	Max. Inverse Peak Voltage	Peak Plate Current mA	Type
0Z4-G	Full-Wave Rectifier	4R	Cold	—	—	300	75	1000	200	GAS
1G3-GT/ 1B3-GT	Half-Wave Rectifier	3C	Fil.	1.25	0.2	—	1.0	33000	30	HV
1K3/1J3	Half-Wave Rectifier	3C	Fil.	1.25	0.2	—	0.5	26000	50	HV
1V2	Half-Wave Rectifier	9U	Fil.	0.625	0.3	—	0.5	7500	10	HV
2B25	Half-Wave Rectifier	3T	Fil.	1.4	0.11	1000	1.5	—	9	HV
2X2-A	Half-Wave Rectifier	4AB	Htr.	2.5	1.75	4500	7.5	—	—	HV
2Y2	Half-Wave Rectifier	4AB	Fil.	2.5	1.75	4400	5.0	—	—	HV
2Z2/G84	Half-Wave Rectifier	4B	Fil.	2.5	1.5	350	50	—	—	HV
3B24	Half-Wave Rectifier	Fig. 49	Fil.	5.0	3.0	—	60	20000	300	HV
				2.5[5]	3.0	—	30	20000	150	
3B28	Half-Wave Rectifier	4P	Fil.	2.5	5.0	—	250	10000	1000	GAS
5AT4	Full-Wave Rectifier	5L	Htr.	5.0	2.25	550	800	1550	—	HV
5AU4	Full-Wave Rectifier	5T	Fil.	5.0	4.5	300[3]	350[3]	1400	1075	HV
						400[3]	325[3]			
						500[4]	325[4]			
5AW4	Full-Wave Rectifier	5T	Fil.	5.0	4.0	450[3]	250[3]	1550	750	HV
						550[4]	250[4]			
5BC3	Full-Wave Rectifier	9NT	Fil.	5.0	3.0	500	150	1700	1000	HV
5R4GY 5R4GYA	Full-Wave Rectifier	5T	Fil.	5.0	2.0	900[3]	150[3]	2800	650	HV
						950[4]	175[4]			
5U4G	Full-Wave Rectifier	5T	Fil.	5.0	3.0	Same as Type 5Z3				HV
5U4GA	Full-Wave Rectifier	5T	Fil.	5.0	3.0	300[3]	275[3]	1550	900	HV
						450[3]	250[3]			
						550[4]	250[4]			
5U4GB 5AS4A	Full-Wave Rectifier	5T	Fil.	5.0	3.0	300[3]	300[3]	1550	1000	HV
						450[3]	275[3]			
						550[4]	275[4]			
5V3A	Full-Wave Rectifier	5T	Htr.	5.0	3.8	425[3] 500[4]	350	1400	1200	HV
5V4GA	Full-Wave Rectifier	5L	Htr.	5.0	2.0	375[3]	175	1400	525	HV
5X4G	Full-Wave Rectifier	5Q	Fil.	5.0	3.0	Same as Type 5Z3				HV
5Y3-G-GT	Full-Wave Rectifier	5T	Fil.	5.0	2.0	Same as Type 80				HV
5Y4-G-GT	Full-Wave Rectifier	5Q	Fil.	5.0	2.0	Same as Type 80				HV
5Z3	Full-Wave Rectifier	4C	Fil.	5.0	3.0	500	250	1400	—	HV
5Z4	Full-Wave Rectifier	5L	Htr.	5.0	2.0	400	125	1100	—	HV
6AF3	Half-Wave Rectifier	9CB	Htr.	6.3	1.2	—	185	4500	750	HV
6AL3	Half-Wave Rectifier	9CB	Htr.	6.3	1.55	—	220	7500	550	HV
6AV4	Full-Wave Rectifier	5BS	Htr.	6.3	0.95	—	90	1250	250	HV
6AX5GT	Full-Wave Rectifier	6S	Htr.	6.3	1.2	450	125	1250	375	HV
6BW4	Full-Wave Rectifier	9DJ	Htr.	6.3	0.9	450	100	1275	350	HV
6BX4	Full-Wave Rectifier	5BS	Htr.	6.3	0.6	—	90	1350	270	HV
6BY5G	Full-Wave Rectifier	6CN	Htr.	6.3	1.6	375[3]	175	1400	525	HV
6CA4	Full-Wave Rectifier	9M	Htr.	6.3	1.0	350[3]	150	1000	450	HV
6DA4A	Half-Wave Diode	4CG	Htr.	6.3	1.2	—	155	4400	900	HV
6DE4	Half-Wave Rectifier	4CG	Fil.	6.3	1.6	—	175	5000	1100	HV
6U4GT	Half-Wave Rectifier	4CG	Htr.	6.3	1.2	—	138	1375	660	HV
6V4	Full-Wave Rectifier	9M	Htr.	6.3	0.6	350	90	—	—	HV
6X4/6063 6X5GT	Full-Wave Rectifier	7CF 6S	Htr.	6.3	0.3	325[3] 450[4]	70	1250	210	HV
6Z3	Half-Wave Rectifier	4G	Fil.	6.3	0.3	350	50	—	—	HV
12DF5	Full-Wave Rectifier	9BS	Htr.	6.3	0.9	450	100	1275	350	HV
				12.6	0.45					
12X4	Full-Wave Rectifier	5BS	Htr.	12.6	0.3	650[3]	70	1250	210	HV
						900[4]	70	1250	210	
25Z5	Rectifier-Doubler	6E	Htr.	25	0.3	125	100	—	500	HV
35W4	Half-Wave Rectifier	5BQ	Htr.	35[1]	0.15	125	60	330	600	HV
35Z4GT	Half-Wave Rectifier	5AA	Htr.	35	0.15	250	100	700	600	HV
35Z5G	Half-Wave Rectifier	6AD	Htr.	35[1]	0.15	125	60	—	—	HV
36AM3	Half-Wave Rectifier	5BQ	Htr.	36	0.1	117	75	365	530	HV
50DC4	Half-Wave Rectifier	5BQ	Htr.	50	0.15	117	100	330	720	HV
50Y6GT	Full-Wave Rectifier	7Q	Htr.	50	0.15	125	85	—	—	HV
80	Full-Wave Rectifier	4C	Fil.	5.0	2.0	350[3]	125	1400	375	HV
						500[4]	125			
83	Full-Wave Rectifier	4C	Fil.	5.0	3.0	500	250	1400	800	MV
83-V	Full-Wave Rectifier	4AD	Htr.	5.0	2.0	400	200	1100	—	HV
117N7GT	Rectifier-Tetrode	8AV	Htr.	117	0.09	117	75	350	450	HV
117Z3	Half-Wave Rectifier	4CB	Htr.	117	0.04	117	90	300	—	HV
816	Half-Wave Rectifier	4P	Fil.	2.5	2.0	2200	125	7500	500	MV
836	Half-Wave Rectifier	4P	Htr.	2.5	5.0	—	—	5000	1000	HV
866-A-AX	Half-Wave Rectifier	4P	Fil.	2.5	5.0	3500	250	10000	1000	MV
866B	Half-Wave Rectifier	4P	Fil	5.0	5.0	—	—	8500	1000	MV
866 Jr.	Half-Wave Rectifier	4B	Fil.	2.5	2.5	1250	250[2]	—	—	MV
872A/872	Half-Wave Rectifier	4AT	Fil.	5.0	7.5	—	1250	10000	5000	MV

[1] Tapped for pilot lamps.
[2] Per pair with choke input.
[3] Capacitor input.
[4] Choke input.
[5] Using only one-half of filament.

TABLE VII — TRIODE TRANSMITTING TUBES

Type	Maximum Ratings: Plate Dissipation Watts	Plate Voltage	Plate Current mA	DC Grid Current mA	Freq. MHz. Full Ratings	Amplification Factor	Cathode: Volts	Amperes	Capacitances: C_{in} pF	C_{gp} pF	C_{out} pF	Base	Typical Operation: Class of Service[1]	Plate Voltage	Grid Voltage	Plate Current mA	DC Grid Current mA	Approx. Driving Power Watts	P-to-P Load Ohms	Approx. Output Power Watts
6J6A†[2]	1.5	300	30	16	250	32	6.3	0.45	2.2	1.6	0.4	7BF	C-T	150	−10	30	1.6	0.035	—	3.5
6F4	2.0	150	20	8.0	500	17	6.3	0.225	2.0	1.9	0.6	7BR	C-T-O	150	−15 550* 2000[4]	20	7.5	0.2	—	1.8
8627	2.7	300	30	6	1.2GHz	70	6.3	0.15	6	—	1.2	12CT	G-G-A	180	−5.5	20	4	—	—	1.2
12AU7A[2]	2.7[6]	350	12[6]	3.5[6]	54	18	6.3	0.3	1.5	1.5	0.5	9A	C-T-O	350	−100	24	7	—	—	6.0
6026	3.0	150	30	10	400	24	6.3	0.2	2.2	1.3	0.38	Fig. 16	C-T-O	135	1300[4]	20	9.5	—	—	1.25
6C4	5.0	350	25	8.0	54	18	6.3	0.15	1.8	1.6	1.3	6BG	C-T-O	300	−27	25	7.0	0.35	—	5.5
2C36	5	1500[5]	—	—	1200	25	6.3	0.4	1.4	2.4	0.36	Fig. 21	C-T-O[10]	1000[5]	0	900[5]	—	—	—	200[5]
2C37	5	350	—	—	3300	25	6.3	0.4	1.4	1.85	0.02	Fig. 21	C-T-O[12]	150	3000[4]	15	3.6	—	—	0.5
5764	5	1500[5]	11.5	—	3300	25	6.3	0.4	1.4	1.85	0.02	Fig. 21	C-T-O[16]	1000[5]	0	1300[5]	—	—	—	200[5]
5675	5	165	30	8	3000	20	6.3	0.135	2.3	1.3	0.09	Fig. 21	G-G-O	120	−8	25	4	—	—	0.05
6N7GT[2]	5.5[6]	350	30[6]	5.0[6]	10	35	6.3	0.8	—	—	—	8B	C-T-O	350	−100	60	10	—	—	14.5
8808	6	1000	75[14]	—	1.2GHz	100	6.3	0.34	9.6	—	2.7	Fig. 15	G-G-A	206	5.8	50	19	1.0	—	5
2C40	6.5	500	25	—	500	36	6.3	0.75	2.1	1.3	0.05	Fig. 11	C-T-O	250	−5	20	0.3	—	—	0.075
5893	8.0	400	40	13	1000	27	6.0	0.33	2.5	1.75	0.07	Fig. 21	C-T	350	−33	35	13	2.4	—	6.5
													C-P	300	−45	30	12	2.0	—	6.5
2C43	12	500	40	—	1250	48	6.3	0.9	2.9	1.7	0.05	Fig. 11	C-T-O	470	—	38[7]	—	—	—	9[7]
6263	13	400	55	25	500	27	6.3	0.28	2.9	1.7	0.08	—	C-T	350	−58	40	15	3	—	10
													C-P	320	−52	35	12	2.4	—	8
6264	13	400	50	25	500	40	6.3	0.28	2.95	1.75	0.07	—	C-T	350	−45	40	15	3	—	8
3C24	25	2000	75	7[13]	60	24	6.3	3.0	1.7	1.6	0.2	2D	C-T	2000	−130	63	18	4	—	100
	17	1600	60										C-P	1600	−170	53	11	3.1	—	68
	25	2000	75										AB_2[7]	1250	−42	24/130	270[9]	3.4[8]	21.4K	112
1623	30	1000	100	25	60	20	6.3	2.5	5.7	6.7	0.9	3G	C-T-O	1000	−90	100	20	3.1	—	75
													C-P	750	−125	100	20	4.0	—	55
													B[7]	1000	−40	30/200	230[9]	4.2[8]	12K	145
811-A	65	1500	175	50	60	160	6.3	4.0	5.9	5.6	0.7	3G	C-T	1500	−70	173	40	7.1	—	200
													C-P	1250	−120	140	45	10.0	—	135
													G-G-B	1250	0	27/175	28	12	—	165
													AB_1	1250	0	27 175	13	3.0	—	155
812-A	65	1500	175	35	60	29	6.3	4.0	5.4	5.5	0.77	3G	C-T	1500	−120	173	30	6.5	—	190
													C-P	1250	−115	140	35	7.6	—	130
													B[7]	1500	−48	28/310	270[9]	5.0	13.2K	340
100TH	100	3000	225	60	40	40	5.0	6.3	2.9	2.0	0.4	2D	C-T C-P	3000	−200	165	51	18	—	400
													B[7]	3000	−65	40/215	335[9]	5.0[8]	31K	650
3-100A2 100TL	100	3000	225	50	40	14	5.0	6.3	2.3	2.0	0.4	2D	C-T C-P	3000	−400	165	30	20	—	400
													G-M-A	3000	−560	60	2.0	7.0	—	90
													B[7]	3000	−185	40/215	640[9]	6.0[8]	30K	450
3CX100A5[15]	100	1000	125[14]	50	2500	100	6.0	1.05	7.0	2.15	0.035	—	G-G-A	800	−20	80	30	6	—	27
	70	600	100[14]										C-P	600	−15	75	40	6	—	18
2C39	100	1000	60	40	500	100	6.3	1.1	6.5	1.95	0.03	—	G-I-C	600	−35	60	40	5.0	—	20
													C-T-O	900	−40	90	30	—	—	40
													C-P	600	−150	100[14]	50	—	—	—
AX9900/ 5866[15]	135	2500	200	40	150	25	6.3	5.4	5.8	5.5	0.1	Fig. 3	C-T	2500	−200	200	40	16	—	390
													C-P	2000	−225	127	40	16	—	204
													B[7]	2500	−90	80/330	350[9]	14[8]	15.68K	560
572B/T160L	160	2750	275	—	—	170	6.3	4.0	—	—	—	3G	C-T	1650	−70	165	32	6	—	205
													G-G-B[7]	2400	−2.0	90 500	—	100		600
810	175	2500	300	75	30	36	10	4.5	8.7	4.8	12	2N	C-T	2500	−180	300	60	19	—	575
													C-P	2000	−350	250	70	35	—	380
													G-M-A	2250	−140	100	2.0	4	—	75
													B[7]	2250	−60	70/450	380[9]	13[8]	11.6K	725
8873	200	2200	250	—	500	160	6.3	3.2	19.5	7.0	0.03	—	AB_2	2000	—	22 500	98[8]	27[8]	—	505
250TH	250	4000	350	40[13]	40	37	5.0	10.5	4.6	2.9	0.5	2N	C-T-O	2000	−100	357	94	29	—	464
														3000	−150	333	90	32	—	750
													C-P	2000	−160	250	60	22	—	335
														2500	−180	225	45	17	—	400
														3000	−200	200	38	14	—	435
													AB_2[7]	1500	0	220/700	460[9]	46[8]	4.2K	630
250TL	250	4000	350	35[13]	40	14	5.0	10.5	3.7	3.0	0.7	2N	C-T-O	2000	−200	350	45	22	—	455
														3000	−350	335	45	29	—	750
													C-P	2000	−520	250	29	24	—	335
														2500	−520	225	20	16	—	400
														3000	−520	200	14	11	—	435
													AB_2[7]	1500	−40	200/700	780[9]	38[8]	3.8K	580

[1] See page V27 for Key to Class-of-Service abbreviations.

TABLE VII — TRIODE TRANSMITTING TUBES — *Continued*

Type	Maximum Ratings: Plate Dissipation Watts	Plate Voltage	Plate Current mA	DC Grid Current mA	Freq. MHz Full Ratings	Amplification Factor	Cathode: Volts	Amperes	Capacitances: C_{in} pF	C_{gp} pF	C_{out} pF	Base	Typical Operation: Class of Service[1]	Plate Voltage	Grid Voltage	Plate Current Ma.	DC Grid Current mA	Approx. Driving Power Watts	P-to-P Load Ohms	Approx. Output Power Watts
PL-6569	250	4000	300	120	30	45	5.0	14.5	7.6	3.7	0.1	Fig. 3	G-G-A	2500	−70	300	85	75[11]	—	555
														3000	−95	300	110	85[11]	—	710
														3500	−110	285	90	85[11]	—	805
														4000	−120	250	50	70[11]	—	820
8875	300	2200	250	—	500	160	6.3	3.2	19.5	7.0	0.03	—	AB_2	2000	—	22 500	98[8]	27[8]	—	505
304TH	300	3000	900	60[13]	40	20	5.0	25	13.5	10.2	0.7	4BC	C-T-O	1500	−125	665	115	25	—	700
														2000	−200	600	125	39	—	900
							10	12.5					C-P	1500	−200	420	55	18	—	500
														2000	−300	440	60	26	—	680
														2500	−350	400	60	29	—	800
													AB_2[7]	1500	−65	1065[8]	330[9]	25[8]	2.84K	1000
304TL	300	3000	900	50[13]	40	12	5.0	25	12.1	8.6	0.8	4BC	C-T-O	1500	−250	665	90	33	—	700
														2000	−300	600	85	36	—	900
							10	12.5					C-P	2000	−500	250	30	18	—	410
														2000	−500	500	75	52	—	810
														2500	−525	200	18	11	—	425
														2500	−550	400	50	36	—	830
													AB_1[7]	1500	−118	270/572	236[9]	0	2.54K	256
														2500	−230	160/483	460[9]	0	8.5K	610
													AB_2[7]	1500	−118	1140[8]	490[9]	39[8]	2.75K	1100
833A	350	3300	500	100	30	35	10	10	12.3	6.3	8.5	Fig. 41	C-T-O	2250	−125	445	85	23	—	780
														3000	−160	335	70	20	—	800
	450[15]	4000[15]			20[15]								C-P	2500	−300	335	75	30	—	635
														3000	−240	335	70	26	—	800
													B^7	3000	−70	100/750	400[9]	20[8]	9.5K	1650
8874	400	2200	250	—	500	160	6.3	3.2	19.5	7.0	0.03	—	AB_2	2000	—	22 500	98[8]	27[8]	—	505
3-400Z	400	3000	400	—	110	200	5	14.5	7.4	4.1	0.07	Fig. 3	G-G-B	3000	0	100/333	120	32	—	655
PL-6580	400	4000[15]	350	120	—	45	5.0	14.5	7.6	3.9	0.1	5BK	G-G-A	4000	−110	350	92	105[11]	—	1080
														2500	−70	350	95	85	—	660
8163	400	3000	400	20[13]	30	350	5.0	14.1	8.0	5.0	0.3	Fig. 3	G-G-B	2500	0	72/400	140	35	—	640
3-500Z	500	4000	400	—	110	160	5	14.5	7.4	4.1	0.07	Fig. 3	G-G-B	3000	—	370	115	30	5K	750
3-1000Z	1000	3000	800	—	110	200	7.5	21.3	17	6.9	0.12	Fig. 3	C-T	3500	−75	300	115	22	—	850
8877	1500	4000	1000	—	250	200	5.0	10	42	10	0.1	—	G-G-B	3000	0	180/670	300	65	—	1360
													AB_2	2500	−8.2	1000	—	57	—	1520

* Cathode resistor in ohms.

[1] KEY TO CLASS-OF-SERVICE ABBREVIATIONS
- A_1 = Class-A_1 af modulator.
- AB_1 = Class-AB_1 push-pull af modulator.
- AB_2 = Class-AB_2 push-pull af modulator.
- B = Class-B push-pull af modulator.
- C-M = Frequency multiplier.
- C-P = Class-C plate-modulated telephone.
- C-T = Class-C telegraph.
- C-T-O = Class-C amplifier-osc.
- G-G-A = Grounded-grid class-C amp.
- G-G-B = Grounded-grid class-B amp. (Single Tone).
- G-G-O = Grounded-grid osc.
- G-I-C = Grid-isolation circuit.
- G-M-A = Grid-modulated amp.

[2] Twin triode. Values, except interelectrode capacitances, are for both sections in push-pull.
[3] Output at 112 MHz.
[4] Grid leak resistor in ohms.
[5] Peak values.
[6] Per section.
[7] Values are for two tubes in push-pull.
[8] Max. signal value.
[9] Peak af grid-to-grid volts.
[10] Plate-pulsed 1000-MHz. osc.
[11] Includes bias loss, grid dissipation, and feed-through power.
[12] 1000-MHz. cw osc.
[13] Max. grid dissipation in watts.
[14] Max. cathode current in mA.
[15] Forced-air cooling required.
[16] Plate-pulsed 3300-MHz. osc.
[17] 1900-MHz. cw osc.
[18] No Class-B data available.

TABLE VIII — TETRODE AND PENTODE TRANSMITTING TUBES

Type	Maximum Ratings: Plate Dissipation Watts	Plate Voltage	Screen Dissipation Watts	Screen Voltage	Freq. MHz. Full Ratings	Cathode: Volts	Amperes	Capacitances: C_{in} pF	C_{gp} pF	C_{out} pF	Base	Typical Operation: Class of Service[1,4]	Plate Voltage	Screen Voltage	Suppressor Voltage	Grid Voltage	Plate Current mA	Screen Current mA	Grid Current mA	Approx. Driving Power Watts	P-to-P Load Ohms	Approx. Output Power Watts
8203	1.8	400	—	—	250	6.3	0.16	4.2	2.2	1.6	12AQ	C-P C-T	155	—	—	14 2700[1]	21	—	5	0.4	—	1.55
6939[3]	7.5	275	3	200	500	6.3	0.75	6.6	0.15	1.55	Fig. 13	C-T	200	200	—	−20	60	13	2	1.0	—	7.5
						12.6	0.375					C-P	180	180	—	−20	55	11.5	1.7	1.0	—	6
												C-M	200	190	—	68K[1]	46	10	2.2	0.9	—	—
7905	10	300	1.5	300	175	6.3	0.65	8.5	5.5	0.14	9PB	C-T	300	185	—	−39	60	4	2.2	1.0	—	7
												C-P	250	250	—	−70	60	2.5	2.1	1.0	—	6.5
												C-M	300	215	—	−80	50	3.4	1.5	0.5	—	3.5
7551	12	300	2	250	175	12.6	0.38	10	0.15	5.5	9LK	C-T	300	250	—	−55	80	5.1	1.6	1.5	—	10
7558						6.3	0.8					C-P	250	250	—	−75	70	3.0	2.3	1.0	—	7.5
5763	13.5	350	2	250	50	6.3	0.75	9.5	0.3	4.5	9K	C-T	350	250	—	−28.5	48.5	6.2	1.6	0.1	—	12
6417						12.6	0.375					C-P	300	250	—	−42.5	50	6	2.4	0.15	—	10
												C-M[2]	300	250	—	−75	40	4	1	0.6	—	2.1
												C-M[4]	300	235	—	−100	35	5	1	0.6	—	1.3
2E26	13.5	600	2.5	200	125	6.3	0.8	12.5	0.2	7	7CK	C-T	600	185	—	−45	66	10	3	0.17	—	27
6893						12.6	0.4					C-P	500	180	—	−50	54	9	2.5	0.15	—	18
												AB_1	500	200	—	−25	9/45	10[7]	0	0	—	15
6360[3]	14	300	2	200	200	6.3	0.82	6.2	0.1	2.6	Fig. 13	C-T	300	200	—	−45	100	3	3	0.2	—	18.5
						12.6	0.41					C-P	200	100	—	15K[L]	86	3.1	3.3	0.2	—	9.8
												C-M[11]	300	150	—	−100	65	3.5	3.8	0.45	—	4.8
												AB_2	300	200	—	−21.5	30, 100	1/11.4	64[8]	0.04	6.5K	17.5

TABLE VIII—TETRODE AND PENTODE TRANSMITTING TUBES—*Continued*

Type	Maximum Ratings: Plate Dissipation Watts	Plate Voltage	Screen Dissipation Watts	Screen Voltage	Freq. MHz. Full Ratings	Cathode: Volts	Amperes	Capacitances: C_{in} pF	C_{gp} pF	C_{out} pF	Base	Typical Operation: Class of Service[14]	Plate Voltage	Screen Voltage	Suppressor Voltage	Grid Voltage	Plate Current mA	Screen Current mA	Grid Current mA	Approx. Driving Power Watts	P-to-P Load Ohms	Approx. Output Power Watts
2E25	15	450	4	250	125	6	0.8	8.5	0.15	6.7	5BJ	C-T-O	450	250	—	−45	75	15	3	0.4	—	24
												C-P	400	200	—	−45	60	12	3	0.4	—	16
												AB_2[6]	450	250	—	−30	44/150	10/40	3	0.9[7]	6K	40
832A[3]	15	750	5	250	200	6.3	1.6	8	0.07	3.8	7BP	C-T	750	200	—	−65	48	15	2.8	0.19	—	26
						12.6	0.8					C-P	600	200	—	−65	36	16	2.6	0.16	—	17
8458	16	600	1	200		6.75	0.8	6.2	0.1	2.7	Fig. 13	C-T	400	190	—	−50	110	5	1.8	1.1	—	26.5
						13.5	0.4															
6252/ AX9910[3]	20	750	4	300	300	6.3	1.3	6.5	—	2.5	Fig. 7	C-T	600	250	—	−60	140	14	4	2.0	—	—
						12.6	0.65					C-P	500	250	—	−80	100	12	3	4.0	—	—
												B	500	250	—	−26	25/73	0.7/16	52[8]	—	20K	23.5
1614	25	450	3.5	300	80	6.3	0.9	10	0.4	12.5	7AC	C-T	450	250	—	−45	100	8	2	0.15	—	31
												C-P	375	250	—	−50	93	7	2	0.15	—	24.5
												AB_1[6]	530	340	—	−36	60/160	20[7]	—	—	7.2K	50
815[3]	25	500	4	200	125	6.3	1.6	13.3	0.2	8.5	8BY	C-T-O	500	200	—	−45	150	17	2.5	0.13	—	56
						12.6	0.8					AB_2	500	125	—	−15	22/150	32[7]	—	0.36[7]	8K	54
4652/ 8042	25	750	250	3	175	1.6	3.2	11	0.24	8.5	Fig. 51	C-T	400	190	—	−60	150	11	2	4.5	—	30
4604	25	750	3	250	60	6.3	0.65	11	0.24	8.5	7CL	C-T	400	190	—	−60	150	11	2	4.5	—	30
6146 6146A	25	750	3	250	60	6.3	1.25	13	0.24	8.5	7CK	C-T	500	170	—	−66	135	9	2.5	0.2	—	48
													750	160	—	−62	120	11	3.1	0.2	—	70
8032 6883						12.6	0.585					C-T[12]	400	190	—	−54	150	10.4	2.2	3.0	—	35
												C-P	400	150	—	−87	112	7.8	3.4	0.4	—	32
													600	150	—	−87	112	7.8	3.4	0.4	—	52
6159B						26.5	0.3					AB_2[6]	600	190	—	−48	28/270	1.2/20	2[7]	0.3	5K	113
													750	165	—	−46	22/240	0.3/20	2.6[7]	0.4	7.4K	131
												AB_1[6]	750	195	—	−50	23/220	1/26	100[8]	0	8K	120
8524[3] 8850	25	600	—	300	100	6.3	1.25	7	0.11	3.4	Fig. 76	C-T	600	200	—	−44	120	8	3.7	0.2	—	56
						12.6	0.625					C-P	500	200	—	−61	100	7	2.5	0.2	—	40
												AB_2	500	200	—	−26	20/116	0.1/10	2.6	0.1	11.1K	40
7984	25	750	3	250	175	13.5[1]	0.58	16	0.16	6.0	12EU	C-P/C-T	375	160	—	−80	150	8.5	4	2	—	32
807 807W 5933	30	750	3.5	300	60	6.3	0.9	12	0.2	7	5AW	C-T	750	250	—	−45	100	6	3.5	0.22	—	50
												C-P	600	275	—	−90	100	6.5	4	0.4	—	42.5
												AB_1	750	300	—	−35	15/70	3/8	75[8]	0	—	72
1625						12.6	0.45				5AZ	B[10]	750	—	—	0	15/240	—	555[8]	5.3[7]	6.65K	120
2E22	30	750	10	250	—	6.3	1.5	13	0.2	8	5J	C-T-O	750	250	22.5	−60	100	16	6	0.55	—	53
6146B/ 8298A	35	750	3	250	60	6.3	1.125	13	0.22	8.5	7CK	C-T	750	200	—	−77	160	10	2.7	0.3	—	85
												C-P	600	175	—	−92	140	9.5	3.4	0.5	—	62
												AB_1	750	200	—	−48	25/125	6.3	—	—	3.6K	61
AX-9903[3] 5894A	40	600	7	250	250	6.3	1.8	6.7	0.08	2.1	Fig. 7	C-T	600	250	—	−80	200	16	2	0.2	—	80
						12.6	0.9															
829B[3] 3E29[3]	40	750	7	240	200	6.3	2.25	14.5	0.12	7	7BP	C-T	500	200	—	−45	240	32	12	0.7	—	83
						12.6	1.125					C-P	425	200	—	−60	212	35	11	0.8	—	63
												B	500	200	—	−18	27/230	—	56[8]	0.39	4.8K	76
3D24	45	2000	10	400	125	6.3	3	6.5	0.2	2.4	Fig. 75	C-T-O	2000	375	—	−300	90	20	10	4.0	—	140
													1500	375	—	−300	90	22	10	4.0	—	105
4D22	50	750	14	350	60	12.6	1.6	28	0.27	13	Fig. 26	C-T	750	300	—	−100	240	26	12	1.5	—	135
						25.2	0.8						600	300	—	−100	215	30	10	1.25	—	100
4D32						6.3	3.75				Fig. 27	C-P	600	—	—	−100	220	28	10	1.25	—	100
													550	—	—	−100	175	17	6	0.6	—	70
												AB_2[6]	600	250	—	−25	100/365	26[7]	70[8]	0.45[7]	3K	125
8117[3]	60	750	7	300	175	6.3	1.8	11.8	3.7	0.09	Fig. 7	AB_1	600	250	—	−32.5	60/212	1.9/25	—	—	1410	76
						12.6	0.9															
814	65	1500	10	300	30	10	3.25	13.5	0.1	13.5	Fig. 64	C-T	1500	300	—	−90	150	24	10	1.5	—	160
												C-P	1250	300	—	−150	145	20	10	3.2	—	130
4-65A	65	3000	10	600	150	6	3.5	8	0.08	2.1	Fig. 25	C-T-O	1500	250	—	−85	150	40	18	3.2	—	165
													3000	250	—	−100	115	22	10	1.7	—	280
												C-P	1500	250	—	−125	120	40	16	3.5	—	140
													2500	250	—	−135	110	25	12	2.6	—	230
												AB_1	2500	400	—	−85	15/66	3[7]	—	—	—	100
7854[3]	68	1000	8	300	175	6.3	1.8	6.7	2.1	0.09	Fig. 7	C-T	750	260	—	−75	240	12.7	5.5	3.5	—	123
						12.6	0.9					C-P	600	225	—	−75	200	7.8	5.5	3.5	—	85
4E27/ 8001	75	4000	30	750	75	5	7.5	12	0.06	6.5	7BM	C-T	2000	500	60	−200	150	11	6	1.4	—	230
												C-P	1800	400	60	−130	135	11	8	1.7	—	178
PL-177A	75	2000	10	600	175	6	3.2	7.5	0.06	4.2	Fig. 14	C-T-C-P	2000	400	0	−125	150	12	5	0.8	—	220
													1000	400	0	−105	150	16	5	0.7	—	100
												AB_1	2000	600	—	−115	25/175	0/7	0	0	—	210

[14] See page V29 for Key to Class-of-Service abbreviations.

Type	Maximum Ratings: Plate Dissipation Watts	Plate Voltage	Screen Dissipation Watts	Screen Voltage	Freq. MHz. Full Ratings	Cathode: Volts	Amperes	Capacitances: C_{in} pF	C_{gp} pF	C_{out} pF	Base	Typical Operation: Class of Service[14]	Plate Voltage	Screen Voltage	Suppressor Voltage	Grid Voltage	Plate Current mA	Screen Current mA	Grid Current mA	Approx. Driving Power Watts	P-to-P Load Ohms	Approx. Output Power Watts
7270	80	1350	—	425	175	6.3	3.1	8	0.4	0.14	Fig. 84	C-T	850	400	—	−100	275	15	8	10	—	135
7271						13.5	1.25					AB_1	665	400	—	−119	220	15	6	10	—	85
8072	100	2200	8	400	500	13.5	1.3	16	0.13	0.011	Fig. 85	C-T-O	700	200	—	−30	300	10	20	5	—	85
6816[9]	115	1000	4.5	300	400	6.3	2.1	14	0.085	0.015	Fig. 77	C-T-O	900	300	—	−30	170	1	10	3	—	80
6884												C-P	700	250	—	−50	130	10	10	3	—	45
						26.5	0.52					AB_1[6]	850	300	—	−15	80/200	0/20	30[8]	0	7K	80
												AB_2[6]	850	300	—	−15	80/335	0/25	46[8]	0.3	3.96K	140
813[13]	125	2500	20	800	30	10	5	16.3	0.25	14	5BA	C-T-O	1250	300	0	−75	180	35	12	1.7	—	170
													2250	400	0	−155	220	40	15	4	—	375
												AB_1	2500	750	0	−95	25/145	27[7]	0	0	—	245
												AB_2[6]	2000	750	0	−90	40/315	1.5/58	230[8]	0.1[7]	16K	455
													2500	750	0	−95	35/360	1.2/55	235[8]	0.35[7]	17K	650
4-125A	125	3000	20	600	120	5	6.5	10.8	0.07	3.1	5BK	C-T-O	2000	350	—	−100	200	50	12	2.8	—	275
4D21													3000	350	—	−150	167	30	9	2.5	—	375
6155												AB_2[6]	2500	350	—	−43	93/260	0/6	178[8]	1.0[7]	22K	400
												AB_1[6]	2500	600	—	−96	50/232	0.3/8.5	192[8]	0	20.3K	330
												GG	2000	0	—	0	10/105[17]	30[17]	55[17]	16[17]	10.5K	145
4E27A/	125	4000	20	750	75	5	7.5	10.5	0.08	4.7	7BM	C-	3000	500	60	−200	167	5	6	1.6	—	375
5-125B													1000	750	0	−170	160	21	3	0.6	—	115
803	125	2000	30	600	20	10	5	17.5	0.15	29	5J	C-T	2000	500	40	−90	160	45	12	2	—	210
												C-P	1600	400	100	−80	150	45	25	5	—	155
7094	125	2000	20	400	60	6.3	3.2	9.0	0.5	1.8	Fig. 82	C-T	1500	400	—	−100	330	20	5	4	—	340
												C-P	1200	400	—	−130	275	20	5	5	—	240
												AB_1	2000	400	—	−65	30/200	35[7]	60[8]	0	12K	250
4X150A	150[9]	2000	12	400	500	6	2.6	15.5	0.03	4.5	Fig. 75	C-T-O	1250	250	—	−90	200	20	10	0.8	—	195
4X150G[15]												C-P	1000	250	—	−105	200	20	15	2	—	140
						2.5	6.25	27	0.035	4.5	—	AB_2[6]	1250	300	—	−44	475[7]	0/65	100[8]	0.15[7]	5.6K	425
8121	150	2200	8	400	500	13.5	1.3	16	0.13	0.011	Fig. 5	C-T-O	1000	200	—	−30	300	10	30	5	—	165
8646	150	2200	8	400	500	26.5	0.64	16	0.13	0.011	—	C-T	1500	200	—	−30	300	5	30	8	—	235
4-250A	250[9]	4000	35	600	110	5	14.5	12.7	0.12	4.5	5BK	C-T-O	2500	500	—	−150	300	60	9	1.7	—	575
5D22													3000	500	—	−180	345	60	10	2.6	—	800
6156												C-P	2500	400	—	−200	200	30	9	2.2	—	375
													3000	400	—	−310	225	30	9	3.2	—	510
												AB_2[6]	2000	300	—	−48	510[7]	0/26	198[8]	5.5[7]	8K	650
												AB_1[6]	2500	600	—	−110	430[7]	0.3/13	180[8]	0	11.4K	625
4X250B	250[9]	2000	12	400	175	6	2.1	18.5	0.04	4.7	Fig. 75	C-T-O	2000	250	—	−90	250	25	27	2.8	—	410
												C-P	1500	250	—	−100	200	25	17	2.1	—	250
												AB_1[6]	2000	350	—	−50	500[7]	30[7]	100[8]	0	8.26K	650
7034/[9]	250	2000	12	300	150	6	2.6	16	0.03	4.4	Fig. 75	C-T-O	2000	250	—	−88	250	24	8	2.5	—	370
4X150A												C-P	1600	250	—	−118	200	23	5	3	—	230
7035/	250	2000	12	400		26.5	0.58					AB_2[6]	2000	300	—	−50	100/500	0/36	106[8]	0.2	8.1K	630
4X150D												AB_1[6]	2000	300	—	−50	100/470	0/36	100[8]	0	8.76K	580
4CX-300A	300[9]	2000	12	400	500	6	2.75	29.5	0.04	4.8	—	C-T	2000	250	—	−90	250	25	27	2.8	—	410
												C-P	1500	250	—	−100	200	25	17	2.1	—	250
												AB_1[6]	2000	350	—	−50	500[7]	30[7]	100[8]	0	8.26K	650
175A	400	4000	25	600	—	5	14.5	15.1	0.06	9.8	Fig. 86	C-T-C-P	4000	600	0	−200	350	29	6	1.4	—	960
													2500	600	0	−180	350	40	7	1.6	—	600
												AB_1	2500	750	—	−143	100/350	1/35	0	0	—	570
4-400A	400[9]	4000	35	600	110	5	14.5	12.5	0.12	4.7	5BK	C-T-C-P	4000	300	—	−170	270	22.5	10	10	—	720
												GG	2500	0	—	0	80/270[17]	55[17]	100[17]	38[17]	4.0K	325
												AB_1	2500	750		−130	95/317	0/14	0	0	—	425
8122	400	2200	8	400	500	13.5	1.3	16	0.13	0.011	Fig. 86	C-T-O	2000	200	—	−30	300	5	30	5	—	300
5-500A	500	4000	35	600	30	10	10.2	19	0.10	12	—	C-T	3000	500	0	−220	432	65	35	12	—	805
												C-T	3100	470	0	−310	260	50	15	6	-	580
												AB_1	3000	750	0	−112	320	26	—	—	—	612
8166/	1000	6000	75	1000	—	7.5	21	27.2	.24	7.6	—	C-T	3000	500	—	−150	700	146	38	11	—	1430
4-1000A												C-P	3000	500	—	−200	600	145	36	12	—	1390
												AB_2	4000	500	—	−60	300/1200	0/95	—	11	7K	3000
												GG	3000	0	—	0	100/700[17]	105[17]	170[17]	130[17]	2.5K	1475
4CX1000A	1000	3000	12	400	400	6	12.5	35	.005	12	—	AB_1[6]	2000	325	—	−55	500/2000	−4/60	—	—	2.8K	2160
													2500	325	—	−55	500/2000	−4/60	—	—	3.1K	2920
													3000	325	—	−55	500/1800	−4/60	—	—	3.85K	3360
8295/	1000	3000	30	600	—	6	8.2	38	.09	18	—	C-T	2000	500	35	−175	850	42	10	1.9	—	1155
172													2500	500	35	−200	840	40	10	2.1	—	1440
													3000	500	35	−200	820	42	10	2.1	—	1770
												AB_1	2000	500	35	−110	200/800	12/43	110[8]	—	2.65K	1040
													2500	500	35	−110	200/800	11/40	115[8]	—	3.5K	1260
													3000	500	35	−115	220/800	11/39	115[8]	—	4.6K	1590

[1] Grid-resistor.
[2] Doubler to 175 MHz.
[3] Dual tube. Values for both sections, in push-pull. Interelectrode capacitances, however, are for each section.
[4] Tripler to 175 MHz.
[5] Filament limited to intermittent operation.
[6] Values are for two tubes
[7] Max.-signal value
[8] Peak grid-to-grid volts.
[9] Forced-air cooling required.
[10] Two tubes triode connected, G_2 to G_1 through 20K Ω. Input to G_2.
[11] Tripler to 200 MHz.
[12] Typical Operation at 175 MHz.
[13] ± 1.5 volts

[14] KEY TO CLASS-OF-SERVICE ABBREVIATIONS
AB_1 = Class-AB_1.
AB_2 = Class-AB_2
B = Class-B push-pull af modulator.
C-M = Frequency multiplier.
C-P = Class-C plate-modulated telephone.
C-T = Class-C telegraph.
C-T-O = Class-C amplifier-osc.
GG = Grounded-grid (grid and screen connected together).

[15] No Class B data available.
[16] HK257B 120 MHz. full rating.
[17] Single tone

TABLE IX — SEMICONDUCTOR DIODES[1]

This list contains but a small percentage of the available diode types. A complete listing would be impractical.

Small-Signal General-Purpose Diodes

Type	Material[2]	Use	Peak Reverse Volts	Max. Forward Voltage at Max. mA	Max. Forward mA at Max. V	Max. Reverse μ-amp
1N34A	G	General Purpose	75	50	5.0	30
1N35	G	General Purpose	50	—	—	2000
1N52A	G	General Purpose	85	50	5.0	100
1N60	G	Video Detector	25	50	5.0	40
1N64	G	Video Detector	20	50	0.1	—
1N64A	G	General Purpose	100	1.0	4.0	5
1N94	S	High-Speed	75	1.0	10.0	5
1N270	G	General Purpose	100	90	—	100
1N634	G	60-Volt Very Low Z	120	—	50.0	45
1N914	S	Fast Logic HF Det.	75	1	75	.025
MBD501	S	Detector Switching	50	1.2	10	200
MBD701	S	Detector Switching	70	1.2	10	200
MMD6050	S	High-Speed Switching	70	1.1	100	.1
MMD6100, MMD6150, MMD7000, MMD7001	S	Dual High-Speed Switching	70	1.1	100	.1
MPN3202	S	Microwave Switching	200	—	1000	10
MPN3208	S	Microwave Switching	800	—	—	10
MPN3209	S	Microwave Switching	900	—	—	10

Microwave Mixer and UHF Diodes

Type	Material[2]	Use	Average Freq.	Noise Figure
1N21B[3]	G	Mixer	3060 MHz	10dB
1N21E[3]	G	Mixer	3060 MHz	7dB
1N21F[3]	G	Mixer	3060 MHz	6dB
1N23C[3]	G	Mixer	9375 MHz	9.8dB
1N23E[3]	G	Mixer	9375 MHz	7.5dB
1N82A	S	Mixer	1000 MHz	14dB
1N830A	S	Video Detector	1000 MHz	—
MBD101	S	Mixer ($V_R = 4v$)	1000 MHz (C_T — 1pF @ 0V)	7dB

Voltage-Variable-Capacitance and Varactor Diodes

Type	Total Nominal C (at 4 V)	Q (at 50 MHz)	Tuning Ratio	Max. Power Diss. (mW)
MV1620	6.8	300	2.0/3.2	400
MV1628	15	250	2.0/3.2	400
MV1636	27	200	2.0/2.5	400
MV1644	56	150	2.0/2.5	400
MV1650	100	150	2.0/2.5	400
MA-4062D	P_{in} 10 watts, f_{in} 400-700 MHz, Junction C 10 pF at 0 V.			
1N4885	P_{in} 25 watts, P_{out} 17 watts, f_{out} 450 MHz, Junction C 16 pF at 40 V, 35 pF at 6 V.			

Zener Diodes

Type	Dissipation in Watts	Nominal Zener Voltage	Max. Zener Current in amp.	Test Current mA	Typical Impedance at Test Current Ohms	Maximum Reverse Current μA	Maximum Reverse Current Volts
1N4370	.4	2.4	.150	20	30	100	1
1N4372	.4	3.0	.120	20	29	50	1
1N748	.4	3.9	.095	20	23	10	1
1N751	.4	5.1	.070	20	17	1	1
1N753	.4	6.2	.060	20	7	1	1
1N958	.4	7.5	.042	16.5	5.5	75	5.4
1N960	.4	9.1	.035	14	7.5	25	6.6
1N963	.4	12	.026	10.5	11.5	5	8.6
1N965	.4	15	.021	8.5	16	5	10.8
1N967	.4	18	.017	7.0	21	5	13
1N970	.4	24	.013	5.2	33	5	17.3
1N972	.4	30	.010	4.2	49	5	21.6
1N975	.4	39	.0078	3.2	80	5	28.1
1N977	.4	47	.0064	2.7	105	5	33.8
1N980	.4	62	.0049	2.0	185	5	44.6
1N982	.4	75	.004	1.7	270	5	54
1N985	.4	100	.003	1.3	500	5	72
1N989	.4	150	.002	0.85	1500	5	108
1N992	.4	200	.0015	0.65	2500	5	144
1N4728	1	3.3	.276	76	10	100	1
1N4735	1	6.2	.146	41	2	10	3
1N4739	1	9.1	.100	28	5	10	7
1N4742	1	12	.076	21	9	5	9.1
1N4744	1	15	.069	17	14	5	11.4
1N4746	1	18	.050	14	20	5	13.7
1N4749	1	24	.038	10.5	25	5	18.2
1N4751	1	30	.030	8.5	40	5	22.8
1N4754	1	39	.023	6.5	60	5	29.7
1N4757	1	51	.018	5.0	95	5	38.8
1N4759	1	62	.014	4.0	125	5	47.1
1N4761	1	75	.012	3.3	175	5	56
1N4764	1	100	.009	2.5	350	5	76
1N2970	10	6.8	1.320	370	1.2	150	4.9
1N2973	10	9.1	.960	275	2.0	25	6.6
1N2976	10	12	.720	210	3.0	5	8.6
1N2979	10	15	.560	170	3.0	5	10.8
1N2982	10	18	.460	140	4.0	5	13
1N2986	10	24	.350	105	5.0	5	17.3
1N2989	10	30	.280	85	8.0	5	21.6
1N2992	10	39	.210	65	11	5	28.1
1N2996	10	50	.165	50	15	5	36
1N3000	10	62	.130	40	17	5	44.6

TABLE IX — SEMICONDUCTOR DIODES[1] — *Continued*

This list contains but a small percentage of the available diode types. A complete listing would be impractical.

Zener Diodes

Type	Dissipation in Watts	Nominal Zener Voltage	Max. Zener Current in amp.	Test Current mA	Typical Impedance at Test Current Ohms	Maximum Reverse Current µA	Maximum Reverse Current Volts
1N3005	10	100	.080	25	40	5	72
1N3011	10	150	.054	17	175	5	108
1N3015	10	200	.040	12	300	5	144
1N3305	50	6.8	6.6	1850	0.2	150	4.3
1N3308	50	9.1	4.8	1370	0.5	25	5.7
1N3311	50	12	3.6	1000	1.0	5	8.6
1N3314	50	15	2.8	830	1.4	5	10.8
1N3317	50	18	2.3	700	2.0	5	13
1N3321	50	24	1.75	520	2.6	5	17.3
1N3324	50	30	1.4	420	3.0	5	21.6
1N3327	50	39	1.05	320	4.0	5	28.1
1N3331	50	50	.830	250	5.0	5	36
1N3335	50	62	.660	200	7.0	5	44.6
1N3337	50	75	.540	170	9.0	5	54
1N3340	50	100	.400	120	20	5	72
1N3346	50	150	.270	150	75	5	108
1N3350	50	200	.200	65	100	5	144

Power Diodes

Type	Material[2]	Max. Reverse Voltage (peak)	Max. Forward Current (amps.)	Average Forward Current (amps.)	Max. Reverse Current (amps.)
1N1612	S	50	15	5	1
1N1613	S	100	15	5	1
1N3193	S	200	6	0.5	0.2
1N3195	S	600	6	0.5	0.2
1N3256	S	800	5	0.4	0.2
1N3563	S	1000	4	0.3	0.2
1N4822	S	600	50	1.5	0.25
1N5054	S	1000	50	1.5	0.25
10B1	—	100	—	1.3	—
10C10	—	1000	—	1.3	—

[1] A bar, plus sign, or color dot usually denotes the cathode end of crystal diodes.
Diode color code rings are grouped toward the cathode end.
[2] S = Silicon. G = Germanium.
[3] Polarity is such that the base is the anode and the tip is the cathode, R-types have opposite polarity.

TABLE X — SEMICONDUCTORS

SMALL-SIGNAL TYPES

No.	Type	Maximum Ratings: Material[1]	Diss. (Watts)	V_{CEO} (Volts)	I_C (dc)	Characteristics: h_{FE} (Min.)	f_T (Typ.)	Noise Fig. (dB)	Use (Typ.)	Other Data: Case Style	Base Conn	Manufacturer[2]	Application
2N706A	NPN	S	0.3*	20	50 mA	20	400 MHz	—	rf	TO-18	8	M	rf, Switching
2N1179	PNP	G	0.080*	−30	−10 mA	100	—	—	hf Amp.	TO-45	5	R	rf Mixer
2N1632	PNP	G	0.080*	—	−10 mA	170	—	—	hf Amp.	TO-1	7	R	rf Amp.
2N2925	NPN	S	0.2*	25	100 mA	170	160 MHz	2.8	Gen. Purpose	—	1	GE	Osc., rf, i-f, af
2N3391A	NPN	S	0.2*	25	100 mA	250	160 MHz	1.9	Audio	—	1	GE	Low-noise Preamps.
2N3663	NPN	S	0.12*	12	25 mA	20	900 MHz	4	rf	—	1	GE	vhf uhf Osc., Amp., Mix.
2N4124	NPN	S	0.3	25	200 mA	120	250 MHz	5	Audio-rf	—	2	M	—
2N4126	PNP	S	0.3	−25	200 mA	120	250 MHz	4	Audio-rf	—	2	M	—
2N4401	NPN	S	0.31*	40	600 mA	20	250 MHz	—	Gen. Purpose	TO-92	2	M	Osc., rf, i-f, af
2N4410	NPN	S	0.31*	80	250 mA	60	250 MHz	—	Gen. Purpose	TO-92	2	M	Osc., rf, i-f, af
2N4957	PNP	S	.2	30	30 mA	20	1600 MHz	2.6	rf Amp.	TO-72	9	M	rf Amp., Mix., Osc.
2N4958	PNP	S	.2	30	30 mA	20	1500 MHz	2.9	rf Amp.	TO-72	9	M	rf Amp., Mix., Osc.
2N4959	PNP	S	.2	30	30 mA	20	1500 MHz	3.2	rf Amp.	TO-72	9	M	rf Amp., Mix., Osc.
2N5031	NPN	S	.2	10	20 mA	25	2000 MHz	2.5	rf Amp.	TO-72	9	M	Low-noise rf Amp.
2N5032	NPN	S	.2	10	20 mA	25	2000 MHz	3.0	rf Amp.	TO-72	9	M	Low-noise rf Amp.
2N5087	PNP	S	0.310*	−50	−50 mA	200	150 MHz	1	rf Amp.	TO-92	2	M	Low-noise rf Amp.
2N5088	PNP	S	0.310*	−30	−50 mA	350	175 MHz	3	rf Amp.	TO-92	2	M	Low-noise rf Amp.
2N5089	PNP	S	0.310*	−25	−50 mA	450	175 MHz	2	rf Amp.	TO-92	2	M	Low-noise rf Amp.
2N5109	NPN	S	3.5*	40	0.4 A	70	—	3	vhf Amp.	TO-39	8	R	Wide-band Amp.
2N5179	NPN	S	0.200*	12	50 mA	25	900 MHz	4.5	rf Amp.	TO-72	9	M	uhf Amp., Osc., Mix.
2N5221	PNP	S	0.310*	−15	—	25	100 MHz	—	Gen. Purpose	TO-92	2	M	Audio Amp.
2N5222	PNP	S	0.310*	−15	−50 mA	20	450 MHz	—	rf Amp.	TO-92	18	M	rf Amp., Mix., Video i-f
2N5829	PNP	S	.2	30	30 mA	20	1600 MHz	2.3	rf Amp.	TO-72	9	M	rf Amp., Mix., Osc.
40231	NPN	S	0.5*	18	100 mA	55	60 MHz	2.8	Audio	TO-104	7	R	Preamps. and Drivers
40235	NPN	S	0.18*	35	50 mA	40	1200 MHz	3.3	rf	TO-104	9	R	vhf/uhf Amp., Osc., Mix.
MPS918	NPN	S	0.310*	15	—	20	200 MHz	6	Amp. Osc.	TO-92	2	M	uhf Amp., Osc.
MPS3563	NPN	S	0.310*	12	—	20	200 MHz	—	Amp. Osc.	TO-92	2	M	uhf Amp., Osc.
MPS3693	NPN	S	0.310*	45	—	40	200 MHz	4	rf Amp.	TO-92	2	M	50 MHz Amp.
MPS3694	NPN	S	0.310*	45	—	100	200 MHz	4	rf Amp.	TO-92	2	M	50 MHz Amp.
MPS3706	NPN	S	0.310*	20	600 mA	600	100 MHz	—	af Amp.	TO-92	2	M	Audio Amp.
MPS6514	NPN	S	.3	25	100 mA	150	480 MHz	2.0	Audio-rf	TO-92	2	M	af rf Amp.
MPS6530	NPN	S	0.310*	40	600 mA	30	390 MHz	—	Amp.	TO-92	2	M	Complementary Amp.
MPS6534	PNP	S	0.310*	−40	−600 mA	60	260 MHz	—	µhf Amp.	TO-92	2	M	Complementary Amp.
MPS6543	NPN	S	0.310*	25	—	25	750 MHz	—	Osc.	TO-92	2	M	uhf Osc.
MPS6569	NPN	S	0.310*	20	—	20	300 MHz	6	i-f Amp.	TO-92	18	M	vhf Amp., Video i-f
MPSA10	NPN	S	0.310*	40	100 mA	40	20 MHz	—	Gen. Purpose	TO-92	2	M	Low-level Amp.
MPSA12	NPN	S	0.310*	20	—	35	—	—	Audio Amp.	TO-92	2	M	High-Z Pre-amp.
TIS48	NPN	—	1.2*	40	500 mA	40	500 MHz	—	rf	TO-92	3	TI	rf, Switching
TIS54	PNP	—	0.25*	−12	−80 mA	30	300 MHz	—	rf	TO-92	3	TI	rf, Switching
TIXM10	PNP	—	0.075*	−20	−30 mA	20	630 MHz	4	rf	TO-72	4	TI	rf, Preamp., vhf uhf

LARGE-SIGNAL TYPES

No.	Type	Maximum Ratings: Material[1]	Diss. (Watts)	V_{CEO} (Volts)	I_C (dc)	Characteristics: h_{FE} (Min.)	f_T (Typ.)	Noise Fig. (dB)	Other Data: Use (Typ.)	Case Style	Base Conn.	Manufacturer[2]	Application
2N1491	NPN	S	3.0*	30	100 mA	15	300 MHz	—	rf Amp.	TO-39	8	R	vhf Amp., Mix.
2N2102	NPN	S	5†	65	1 A	20	100 MHz	6	Gen. Purpose	TO-5	8	R	af, rf Amps. (Linear)
2N2157	PNP	—	170†	—60	—30 A	40	100 kHz	—	af	TO-36	13	M	af, dc Amp., Switch.
2N2270	NPN	S	5†	—	1 A	10	—	6	Amp.	TO-5	9	R	Low-noise Amp.
2N2631	NPN	S	8.75†	60	1.5 A	—	200 MHz	—	rf	TO-39	8	R	Class C rf Amp., Osc.
2N2869	PNP	—	30†	—50	—10 A	50	200 kHz	—	Gen. Purpose	TO-3	11	R	af, Osc., Amp., Switch.
2N2876	NPN	S	17.5†	60	1.5 A	—	200 MHz	—	rf	TO-60	12	R	vhf Class-C Amp.
2N3119	NPN	S	4†	80	500 mA	50	150 MHz	—	Amp.	TO 5	8	R	Switch, Pulse Amp.
2N3512	NPN	—	4	35	500 mA	10	250 MHz	—	Audio-rf	—	7	R	—
2N3553	NPN	S	7†	40	1 A	10	500 MHz	—	rf	TO 39	8	M	Class A, B, C rf Mult., Amp., Osc.
2N3583	NPN	S	35†	175	2 A	10	15 MHz	—	hV Gen. Purp.	TO-66	11	R	rf, af Osc., Amp. dc Amp.
2N3632	NPN	S	23*	65	3 A	—	400 MHz	—	rf Amp.	TO-60	12	R	uhf Pwr. Amp., Osc.
2N3733	NPN	S	23*	65	3 A	—	400 MHz	—	rf Amp.	TO-60	12	R	uhf Pwr. Amp., Osc.
2N3866	NPN	S	5†	30	0.4 A	—	800 MHz	—	rf	TO 39	8	R	Class A, B, C rf Mult., Amp., Osc.
2N3924	NPN	S	7*	18	500 mA	—	350 MHz	—	rf Amp.	TO-39	8	M	uhf Pwr. Amp., Osc.
2N3948	NPN	S	1*	20	400 mA	15	700 MHz	—	rf Amp.	TO-39	8	M	uhf Pwr. Amp., Osc.
2N4012	NPN	S	11.6*	40	1.5 A	—	500 MHz	—	rf Amp.	TO 60	12	R	uhf Pwr. Amp., Osc.
2N4037	PNP	S	7†	—40	—1 A	50	60 MHz	—	Gen. Purpose	TO 5	8	R	Amp., Switching
2N4396	NPN	S	62†	60	5 A	60	4 MHz	—	Gen. Purpose	TO-3	11	R	rf, af Osc., Amp. dc Amp.
2N4427	NPN	S	3.5*	20	400 mA	—	500 MHz	—	rf Amp.	TO-39	8	R	uhf Amp.
2N5016	NPN	S	30*	65	4.5 A	—	600 MHz	—	rf Amp.	TO 60	12	R	uhf Pwr., rf Amp.
2N5070	NPN	S	70†	65	3.3 A	—	30 MHz	—	Amp.	TO-60	12	R	30 MHz Amp.
2N5071	NPN	S	70†	65	3.3 A	—	76 MHz	—	Amp.	TO-60	12	R	50 MHz Amp.
2N5470	NPN	S	3.5†	55	200 mA	—	2GHz	—	uhf Amp.	—	—	R	Microwave Osc., Amp.
2N5636/MM1550	NPN	S	15*	35	1.5 A	5	—	—	rf Amp.	—	23	M	400 MHz, rf Amp.
2N5635/MM1549	NPN	S	7.5*	35	1 A	5	—	—	rf Amp.	—	23	M	400 MHz, rf Amp.
2N5637/MM1551	NPN	S	30*	35	3 A	5	—	—	rf Amp.	—	23	M	400 MHz rf Amp.
2N5641/MM1557	NPN	S	15*	35	1 A	5	—	—	rf Amp.	—	23	M	400 MHz, rf Amp.
2N5642/MM1558	NPN	S	30*	35	3 A	5	—	—	rf Amp.	—	23	M	400 MHz, rf Amp.
2N5643/MM1559	NPN	S	60*	35	5 A	5	—	—	rf Amp.	—	23	M	400 MHz, rf Amp.
2N5913	NPN	S	3.5†	14	330 mA	—	900 MHz	—	uhf Amp.	TO-39	8	R	432 MHz Amp.
2N5914	NPN	S	10.7†	14	1.5 A	—	900 MHz	—	uhf Amp.	—	—	R	432 MHz Amp.
2N5915	NPN	S	10.7†	14	1.5 A	—	800 MHz	—	uhf Amp.	—	—	R	432 MHz Amp.
2N5919	NPN	S	25†	30	4.5 A	—	400 MHz	—	uhf Amp.	—	—	R	220 MHz Amp.
2N5921	NPN	S	8.3†	50	700 mA	—	2.3 GHz	—	uhf Amp.	—	—	R	Microwave Osc., Amp.
2N5941	NPN	S	80	35	6.0A	10	50 MHz	—	rf Amp.	—	25	M	30 MHz rf Amp.
2N5942	NPN	S	140	35	12 A	10	50 MHz	—	rf Amp.	—	26	M	30 MHz rf Amp.
2N5944	NPN	S	5	16	0.4A	20	470 MHz	—	uhf Amp.	—	27	M	432 MHz rf Amp.
2N5945	NPN	S	15	16	0.8 A	20	470 MHz	—	uhf Amp.	—	27	M	432 MHz rf Amp.
2N5946	NPN	S	37.5	16	2.0 A	20	470 MHz	—	uhf Amp.	—	27	M	432 MHz rf Amp.
2N5995	NPN	S	10.7	14	1.5 A	—	175 MHz	—	vhf Amp.	—	23	R	vhf rf Amp.
2N5996	NPN	S	35.7	18	5.0 A	—	175 MHz	—	vhf Amp.	—	23	R	vhf rf Amp.
2N6136	NPN	S	60	18	6.0 A	20	470 MHz	—	uhf Amp.	—	27	M	432 MHz rf Amp.
40081	NPN	S	2*	60	50 mA	—	—	—	rf Amp.	TO-5	8	R	27-MHz, rf Driver
40082	NPN	S	5*	60	330 mA	—	—	—	rf Amp.	TO 39	8	R	27-MHz, rf Pwr. Amp.
40280	NPN	S	7†	36	0.5 A	—	550 MHz	—	rf	TO-39	8	R	Class C rf Mult., Amp., Osc.
40282	NPN	S	23†	18	2 A	—	350 MHz	—	rf	TO-60	12	R	vhf Class-C Amp.
40290	NPN	S	7*	50	500 mA	—	500 MHz	—	rf Amp.	TO 39	8	R	Class-C, rf Amp.
40291	NPN	S	11.6*	50	500 mA	—	500 MHz	—	rf Amp.	TO 60	12	R	Class C, rf Amp.
40292	NPN	S	23.2*	50	1.25 A	—	300 MHz	—	rf Amp.	TO 60	12	R	Class-C, vhf rf Amp.
40310	NPN	S	29†	35	4 A	20	1 MHz	—	Gen. Purpose	TO 66	11	R	Audio, dc Amp. af, rf Osc.
40312	NPN	S	29†	60	4 A	20	1 MHz	—	Gen. Purpose	TO 66	11	R	Audio, dc Amp. af, rf Osc.
40349V2	NPN	S	11.7†	140	1.5 A	25	1 MHz	—	hV Gen. Purp.	—	8	R	af, dc Amps. Switch., Osc.
40405	NPN	S	0.3*	16	500 mA	20	300 MHz	—	rf Amp.	TO 52	8	R	Class-C, vhf rf Amp.
40424	NPN	S	8†	300	150 mA	30	25 MHz	—	hV Gen. Purp.	TO 66	10	R	af rf Osc., Amp.
40675	NPN	S	100†	35	10 A	—	30 MHz	—	h.f. Amp.	—	—	R	2-30 MHz ssb Linear Amp.
MJ480	NPN	S	87†	40	1 A	30	4 MHz	—	Gen. Purpose	TO 3	11	M	af, rf Amp., Osc.
MPS-U01	NPN	S	1.0*	30	1.5 A	70	50 MHz	—	af Amp.	—	20	M	Audio Amp.
MPS-U02	NPN	S	1.0*	40	800 mA	50	150 MHz	—	Gen. Purpose	—	20	M	af Amp.
MPS-U51	PNP	S	1.0*	—30	—1.5 A	70	50 MHz	—	Gen. Purpose	—	20	M	af Amp.
MPS-U52	PNP	S	1.0*	—40	—800 mA	50	150 MHz	—	Gen. Purpose	—	20	M	af Amp.

FIELD-EFFECT TRANSISTORS

No.	Type	Diss. (mW)	V_{DS}	V_{GS}	MIN. μ MHOS	C_{ISS} (pF)	MAX. IDSS (mA)	Top Freq. (MHz)	Case Style	Base Conn.	Manufacturer	Application
2N4416	N JFET	175	30	—6.0	4000	4	15	450	TO-72	15	M	vhf uhf rf Amp., Mix., Osc.
2N4417	N FET	175	30	—30	4500	3.5	15	400	—	22	UC	vhf uhf Amp.
2N5460	P JFET	310	—	40	1000	5	5	—	TO-92	19	M	Gen. Purpose Audio
2N5461	P JFET	310	—	40	1500	5	9	—	TO-92	19	M	Gen. Purpose Audio
2N5462	P JFET	310	—	40	2000	5	16	—	TO-92	19	M	Gen. Purpose Audio
2N5463	P JFET	310	—	40	1000	5	5	—	TO 92	19	M	Gen. Purpose Audio
2N5464	P JFET	310	—	40	1500	5	9	—	TO-92	19	M	Gen. Purpose Audio
2N5465	P FET	310	—	60	2000	5	16	—	TO-92	19	M	Gen. Purpose Amp.
2N5668	N JFET	310	25	0.2	1000	4.7	1	—	TO-92	6	M	Amp. Switching

FIELD-EFFECT TRANSISTORS — *Continued*

No.	Type	Diss. (mW)	V_{DS}	V_{GS}	MIN. μ MHOS	C_{ISS} (pF)	MAX. I_{DSS} (mA)	Top Freq. (MHz)	Case Style	Base Conn.	Manufacturer	Application
2N5669	N JFET	310	25	1.0	1600	4.7	4	—	TO-92	6	M	Amp. Switching
2N5670	N JFET	310	25	2.0	2500	4.7	8	—	TO-92	6	M	Amp. Switching
3N128	N IGFET	100	20	—	5000	5.8	—	200	TO-72	14	R	af, rf, Amp., Mix., Osc.
3N140	N Dual-Gate MOS FET	400	20	—	6000	5.5	50	300	TO-72	16	R	rf Amp.
3N141	N Dual-Gate MOS FET	400	20	—	6000	5.5	50	300	TO-72	16	R	Mix.
3N200	MOS n-channel Depletion type	330	20	−6+6	10,000	8.5	—	500	TO-72	16	R	uhf rf Amp.
40600	N Dual-Gate FET	400	20	−8	10,000	5.5	18	250	TO-72	16	R	uhf rf Amp.
40601	N Dual-Gate FET	400	20	−8	10,000	5.5	18	250	TO-72	16	R	vhf Mixer
40602	N Dual-Gate FET	400	20	−8	10,000	5.5	18	250	TO-72	16	R	vhf Amp.
40603	N Dual-Gate FET	400	20	−8	10,000	5.5	18	—	TO-72	16	R	rf Amp.
40604	N Dual-Gate FET	400	20	−8	10,000	5.5	18	—	TO-72	16	R	rf Mix.
40673	N Dual-Gate FET	330	20	−6	12,000	6	35	400	TO-72	16	R	rf Amp.
E300	N JFET	250	—	1	9000	5.5	30	100	—	4	SI	vhf Amp.
MFE3001	N FET	300	20	±30	700	5	6	—	TO-72	17	M	Low Pwr., af Amp.
MFE3006	N Dual-Gate MOS FET	300	25	±35	8000	6	18	100	TO-72	16	M	vhf rf Amp., Mix.
MFE3007	N Dual-Gate MOS FET	300	25	±35	10,000	4.5	20	200	TO-72	16	M	vhf rf Amp., Mix.
MFE3008	N Dual-Gate MOS FET	300	25	±35	8000	4.5	20	200	TO-72	16	M	vhf rf Amp., Mix.
MMT3823	N JFET	225	30	−30	3000	4.0	20	—	—	21	M	rf Amp., Mix.
MPF102	N JFET	200	25	−2.5	2000	4.5	20	200	TO-92	6	M	af, rf Amp., Mix., Osc.
MPF103/ 2N5457	N JFET	310	25	−25	1000	4.5	5	—	TO-92	6	M	Gen. Purpose Audio
MPF104/ 2N5458	N JFET	310	25	−25	1500	4.5	9	—	TO-92	6	M	Gen Purpose Audio
MPF105/ 2N5459	N JFET	200	25	−4.5	2000	4.5	16	100	TO-92	6	M	af, rf Amp., Mix., Osc.
MPF106/ 2N5484	N JFET	200	25	−25	2500	5	30	432	TO-92	6	M	af, rf Amp., Mix., Osc.
MPF107/ 2N5486	N JFET	310	—	−25	1000	5	20	400	TO-92	6	M	vhf-uhf rf Amp.
MPF120	N Dual-Gate MOS FET	500	25	±20	8000	4.5	18	105	—	24	M	rf Amp.
MPF121	N Dual-Gate MOS FET	500	25	±20	10,000	4.5	30	200	—	24	M	rf Amp.
MPF122	N Dual-Gate MOS FET	500	25	±20	8000	4.5	20	200	—	24	M	rf Mix.

* = Ambient Temp. of 25°C (No heat sink). † = Case Temp. of 25 C (with heat sink).
[1] S = Silicon. G = Germanium. [2] GE = General Electric. M = Motorola. R = RCA. SI = Siliconix. TI = Texas Instuments. UC = Union Carbide.

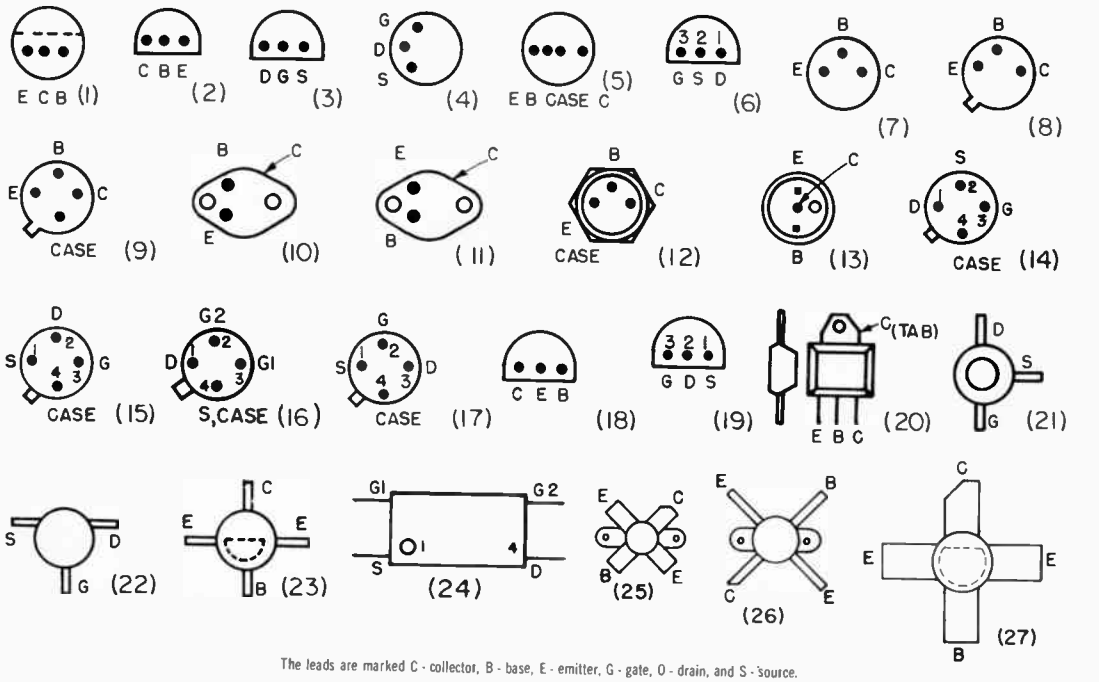

The leads are marked C - collector, B - base, E - emitter, G - gate, O - drain, and S - source.

ABBREVIATIONS USED IN TEXT AND DRAWINGS

A – ampere
ac – alternating current
A/D – analog-to-digital
af – audio frequency
afc – automatic frequency control
afsk – audio frequency-shift keying
agc – automatic gain control
alc – automatic load (or level) control
a-m – amplitude modulation
anl – automatic noise limiter
ARC – amateur radio club
AREC – Amateur Radio Emergency Corps
ARPSC – Amateur Radio Public Service Corps
ATV – amateur television
avc – automatic volume control
bc – broadcast
BCD – binary-coded decimal
bci – broadcast interference
bcl – broadcast listener
BFO – beat-frequency oscillator
BPL – Brass Pounders League
CAM – content-addressable memory
CB – Citizens band
CCIR – International Radio Consultative Committee
ccw – counterclockwise
c.d. – civil defense
CD – Communications Department (ARRL)
CMOS or COSMOS – complimentary-symmetry metal-oxide semiconductor
coax – coaxial cable, connector
COR – carrier-operated relay
CP – Code Proficiency (award)
CR – cathode ray
CRT – cathode-ray tube
ct – center tap
cw – continuous wave (code), clockwise
D/A – digital-to-analog
dB – decibel
dc – direct current
DCTL – direct-coupled transistor logic
DF – direction finder
DOC – Department of Communications (Canadian)
dpdt – double-pole double-throw
dpst – double-pole single-throw
dsb – double sideband
DTL – diode-transistor logic
DX – long distance
DXCC – DX Century Club
EC – Emergency Coordinator
ECO – electron-coupled oscillator
ECL – emitter-coupled logic
EME – earth-moon-earth
emf – electromotive force (voltage)
FAX – facsimile
FCC – Federal Communications Commission
FD – Field Day
FET – field-effect transistor
FF – flip-flop
fm – frequency modulation
FMT – frequency measuring test
fsk – frequency-shift keying
GDO – grid-dip oscillator
GMT – Greenwich Mean Time
H – henry
hf – high frequency
HFO – heterodyne frequency oscillator
Hz – hertz
IARU – International Amateur Radio Union
IC – integrated circuit
ID – inside diameter
i-f – intermediate frequency
in./s – inch per second
IRC – International Reply Coupon
ITU – International Telecommunication Union
IW – Intruder Watch
JFET – junction field-effect transistor
k – kilo
kc – kilocycle
kHz – kilohertz
kW – kilowatt
lf – low frequency
LMO – linear master oscillator
LO – local oscillator
lsb – lower sideband
LSB – least-significant bit
LSD – least-significant digit
LSI – large-scale integration
luf – lowest usable frequency
mA – milliampere
MARS – Military Affiliate Radio System
Mc – Megacycle
mf – medium frequency
MG – motor-generator
mH – millihenry
MHz – Megahertz
mic – microphone
mix – mixer
MO – master oscillator
MOSFET – metal-oxide semiconductor field-effect transistor
MOX – manually-operated switching
ms – millisecond
m.s. – meteor scatter
MSB – most-significant bit
MSD – most-significant digit
MSI – medium-scale integration
muf – maximum suitable frequency
MUX – multiplex
mV – millivolt
mW – milliwatt
nbfm – narrow-band frequency modulation
n.c. – no connection
NC – normally closed
NCS – net control station
NO – normally open
npn – negative-positive-negative
NTS – National Traffic System (ARRL)
OBS – Official Bulletin Station
OD – outside diameter
OO – Official Observer
op amp – operational amplifier
OPS – Official Phone Station
ORS – Official Relay Station
osc – oscillator
OVS – Official VHF Station
oz – ounce

PA – power amplifier
pc – printed or etched circuit board
PEP – peak-envelope power
PEV – peak-envelope voltage
pF – picofarad
PIV – peak-inverse voltage
pk – peak
pk-pk – peak-to-peak
PLL – phase-locked loop
pm – phase modulation
pnp – positive-negative-positive
pot – potentiometer
PRV – peak-reverse voltage
PSHR – Public Service Honor Roll
PTO – permeability-tuned oscillator
PTT – push-to-talk
RACES – Radio Amateur Civil Emergency Service
RAM – random-access memory
RCC – Rag Chewers Club
rcvr – receiver
rf – radio frequency
rfc – radio-frequency choke
RFI – radio-frequency interference
RM – Route Manager
RM-(number) – FCC rulemaking
rms – root-mean-square
RO – Radio Officer (c.d.)
ROM – read-only memory
RST – readability-strength-tone
RTL – resistor-transistor logic
RTTY – radio teletype
s.a.e. – self-addressed envelope
s.a.s.e. – stamped s.a.e.
SCM – Section Communications Manager
SCR – silicon-controlled rectifier
SEC – Section Emergency Coordinator
SET – simulated emergency test
SNR – signal-to-noise ratio
spdt – single-pole double-throw
spst – single-pole single-throw
SS – Sweepstakes (contest)
ssb – single sideband
SSTV – slow-scan TV
SWL – short-wave listener
SWR – standing wave ratio
sync – synchronous, synchronizing
TCC – Transcontinental Corps
TD – transmitting distributor
TE – transequatorial (propagation)
tfc – traffic
tpi – turns per inch
T-R – transmit-receive
TTL or T^2L – transistor-transistor logic
TTY – Teletype
TV – television
TVI – television interference
usb – upper sideband
uhf – ultra-high frequency
V – volt
VCO – voltage-controlled oscillator
VCXO – voltage-controlled crystal oscillator
VFO – variable frequency oscillator
vhf – very high frequency
vlf – very low frequency
VOM – volt-ohm-milliammeter
VOX – voice-operated break-in
VR – voltage regulator
VTVM – vacuum-tube voltmeter
VXO – variable crystal oscillator
W – watt
WAC – Worked All Continents
WAS – Worked All States
wpm – words per minute
ww – wire wound
wv – working voltage
xtal – crystal
μ – micro (10^{-6})

Index

A

B

C

D

E

F

G

H

I

J

K

L

M

N

O

P

Q

R

S

T

U

V

W

XYZ