J 20 419 F

A Publication for the Radio-Amateur

Especially Covering VHF, UHF and Microwaves

VHF communications

Volume No. 11 · Winter · 4/1979 · DM 5.00

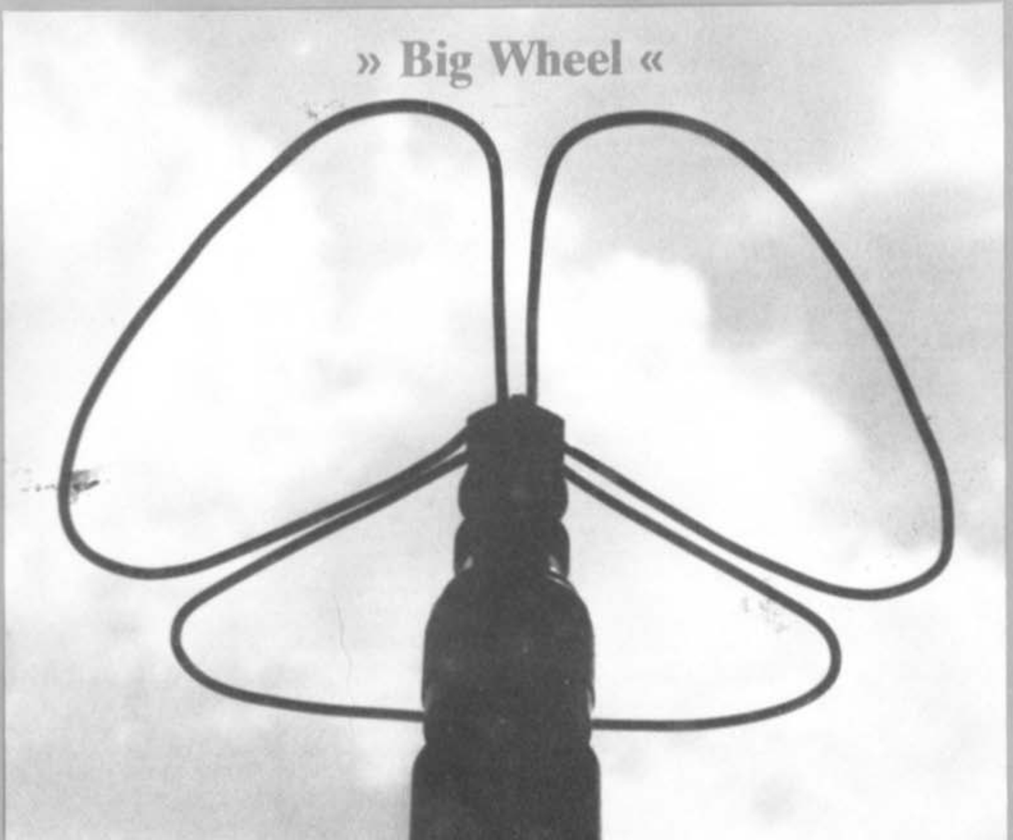

» Big Wheel «

Another Volume of VHF COMMUNICATIONS draws to a close. We hope that you have enjoyed reading the magazine, and hope that you will also enjoy reading it in 1980. Please send your subscription order to your representative as soon as possible to ensure that you receive your first edition without delay. Please do not forget to mention the magazine to your friends and invite them to join our family of readers throughout the World. Remember that all back copies to 1970 are still available and it is possible to replace all those magazines lent out to friends and never received back. A very Happy New Year to all.

Published by:
Verlag UKW-BERICHTE,
Hans J. Dohlus oHG,
Jahnstrasse 14
D-8523 BAIERSDORF
Fed. Rep. of Germany
Telephones (0 91 33) 855, 856.

Publishers: T. Bittan, H. Dohlus

Editors: Terry D. Bittan, G 3 JVQ/DJ 0 BQ, responsible for the text
Robert E. Lentz, DL 3 WR, responsible for the technical contents

Advertising manager: T. Bittan

VHF COMMUNICATIONS the international edition of the German publication UKW-BERICHTE, is a quarterly amateur radio magazine especially catering for the VHF/UHF/SHF technology. It is published in Spring, Summer, Autumn, and Winter. The subscription price is DM 18.00 or national equivalent per year. Individual copies are available at DM 5.00 or equivalent, each. Subscriptions, orders of individual copies, purchase of PC-boards and advertised special components, advertisements and contributions to the magazine should be addressed to the national representative.

Printed in the Fed. Rep. of Germany by R. Reichenbach KG. Krelingstr. 39 · 8500 Nuernberg.

We would be grateful if you would address your orders and queries to your representative.

VERTRETUNGEN · REPRESENTATIVES :

Austria
Hans J. Dohlus, Creditanstalt Bankverein WIEN
Kto.17-90.599, PSchKto. WIEN 1.169.146

Australia
WIA PO Box 150, TOORAK, VIC. 3142, Tel.24-8652

Belgium
Stereohouse, Brusselsesteenweg 416, B-9218 GENT,
PCR 000-1014257 CCP, Tel. (091) 31 21 11

Denmark
E.Halskov, OZ 7 LX, Sigersted Gl. Skole,
DK-4100 RINGSTED, Postgiro 7 296 800, Tel. 03-616162

France
Christiane Michel, F 5 SM, F-89 PARLY, Les Pillés

Finland
Timo Nopanen, OH 3 YW, Metsäter 10, SF-15610 LAHTI

Germany
Verlag UKW-BERICHTE, H.Dohlus oHG, Jahnstr. 14,
D-8523 BAIERSDORF, Tel. (09133) 855, 856.
Konten: Postscheckkonto Nürnberg 304 55-858,
Commerzbank Erlangen 820-1154

Holland
MECOM, PA 0 AER, PO Box 40, Coendersstraat 24,
NL-9780 AA BEDUM, Tel.05900-4390, Postgiro 39 86 163

Israel
Z. Pomer, 4 X 4 KT, PO Box 222, K. MOZKIN
26 100, Tel. 974-4-714078

Italy
Franco Armenghi, I 4 LCK, Via Sigonio 2,
I-40137 BOLOGNA, Tel. (051) 34 56 97

Luxembourg
P. Wantz, LX 1 CW, Télévision, DUDELANGE,
Postscheckkonto 170 05

New Zealand
E. M. Zimmermann, ZL 1 AGQ, PO Box 85,
WELLSFORD, Tel. 8025

Norway
Henning Theg, LA 4 YG, Postboks 70,
N-1324 LYSAKER, Postgirokonto 3 16 00 09

South Africa
SA Publications, PO Box 2232, JOHANNESBURG 2000, Telephone 22-1496

Spain + Portugal
Julio A. Prieto Alonso, EA 4 CJ, MADRID-15,
Donoso Cortès 58 5°-B, Tel. 243.83.84

Sweden
POLY RADIO, Östervärnsgatan 10,
S-21218 MALMÖ, Bo Nilsson, SM 7 FJE,
Tel. 040-292420, Pg: 431 56 99-1, Bg: 317-2939

Switzerland
Hans J. Dohlus, Schweiz. Kreditanstalt ZÜRICH,
Kto. 469.253-41; PSchKto. ZÜRICH 80-54.849

UK North
SOTA Communication Systems Ltd., 26 Childwall
Lane, Bowring Park, LIVERPOOL L 14 6 TX

UK South
VHF COMMUNICATIONS, Dept. 802, 20 Wallington
Square, WALLINGTON Surrey SM 6 8 RG

Yugoslavia
Tito Cvrković, YU-56000 VINKOVCI, M. Gupca 27

A PUBLICATION FOR THE RADIO AMATEUR
ESPECIALLY COVERING VHF, UHF AND MICROWAVES
VOLUME No. 11 WINTER EDITION 4/1979

CONTENTS

The next editions of VHF COMMUNICATIONS will include the following articles:

DC 3 NT : A System for Reception and Display of METEOSAT Images
Part 3: Local Oscillator Module and Image Processing
DK 2 RY : A Microprocessor for Amateur Applications
DJ 7 VY : A Noise Blanker for Large Signal Applications
DJ 6 PI : 2-stage Low-Noise Preamplifiers for 24 to 12 cm Bands
DC 3 QS : Receive Converter for the 6 cm Band in Cavity Technology
DF 5 QZ : Transmit Mixer and Amplifier for the 9 cm Band with Tubes
DC 8 UG / DB 1 PM : Equipment for SSB on the 10 GHz Band
DC 6 AO : Various 10 GHz Modules

A SYSTEM FOR RECEPTION AND DISPLAY OF METEOSAT IMAGES

Part 2

by R. Tellert, DC 3 NT

The whole system was discussed in part 1 of this article which was published in edition 3/79 of VHF COMMUNICATIONS. This description included details for construction of the parabolic dish. The following article is to describe the 1.7 GHz converter and the VHF receiver. Part 3 is to describe a matching (scanning) oscillator for the receiver, as well as the electronic video processing circuits.

Since the whole system was discussed in general in part 1, the individual modules are now to be described in detail.

2. THE METEOSAT CONVERTER

The following description is only to give ideas for construction of a converter; the oscillator chain is not to be discussed in detail, since the DC 0 DA local oscillator for 13 cm converters described in (1), can easily be modified for this application. Crystals having a frequency of **86.306 and 86.500** MHz can be used and these frequencies subsequently multiplied by: x 3, x 2, x 3. Frequencies of just over 500 MHz are present in the stage before last, which can still be indicated on amateur frequency counters. The final tripling can be made with the aid of a diode type 1 N 4148, or Schottky diode. The final frequencies of 1553.50 and 1557.00 MHz can be measured with the aid of a frequency meter as described in (2).

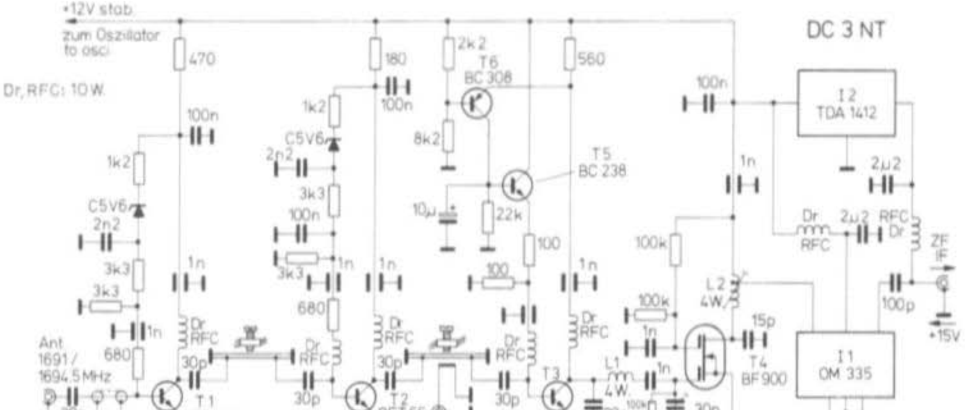

Fig. 11: Circuit diagram of the 1.7 GHz Converter with BFR 14 B as input transistor

2.1. Circuit and Construction

The circuit diagram of the converter is given in **Figure 11**. It will be seen that it comprises a two-stage preamplifier (T 1, T 2), an active mixer (T 3), and two IF-amplifiers (T 4 and I 1).

Two preamplifier stages were chosen in order to ensure that mixer noise was negligible. The first preamplifier stage is equipped with the silicon transistor BFR 14 B (Siemens). This transistor is rated to have a noise figure of 2 to 2.5 dB at 2 GHz. The antenna cable is connected directly to the base, which means that the transistor is presented with a source impedance of 50 Ω. This type of input coupling resulted in a lower noise figure than when using the previously planned matching with a λ/2 input circuit. Even if this does not represent the most favorable method with respect to the noise figure, the selected input coupling will ensure a reliable neutralization of this critical first stage.

A transistor BFR 34 A (Siemens) or even type BFT 65 (Siemens) have sufficiently low-noise characteristics for use in the second stage. A mixer stage following these two preamplifier transistors will no longer be very critical, and a BFT 65 will operate satisfactorily.

The stabilization of the operating point with respect to operating voltage and temperature fluctuations is neglected in many publications using common-emitter circuits. It is, however, very easy to obtain an excellent stability: As can be seen in Figure 11, three resistors and a zener diode are all that is required for each of the two preamplifier stages. A circuit using two cheap AF transistors was developed for the mixer stage, which matches the operating point automatically to the oscillator level.

All operating voltages are stabilized at 12 V (I 2); the converter is fed with a voltage of 15 V or more via the IF feeder cable. Splitting filters for DC and 137.5 MHz can be provided at both ends using, for instance, a 22 μH choke and a 2.2 nF capacitor.

A low-noise DG-MOSFET type BF 900 is used in the first IF stage, and is matched to the mixer transistor with the aid of a Pi-network. A three-stage wideband amplifier is used as second IF-amplifier, which amplifies the required signal by 23 dB (OM 335: Philips). This stage (I 1) will only be necessary when required to compensate for the high loss of a long, thin cable between converter and VHF receiver. The output voltage of this stage will amount to approximately 1 mV during METEOSAT reception using the described antenna.

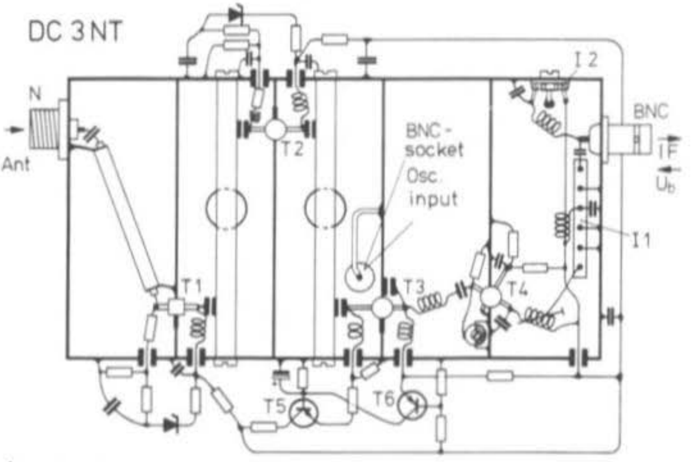

Fig. 12: Construction of the 1.7 GHz converter using λ/2 circuits

2.2. Mechanical Construction

The mechanical arrangement of the converter is given in the form of a drawing in **Figure 12**. The drawing is to scale, which means that the various lengths in the drawing need only to be compared to the length of the λ/2 resonators which are of 70 mm in length. The dimensions of an individual chamber are given in **Figure 13**. The converter comprises five identical chambers constructed from silver-plated brass and is 140 mm long by 70 mm wide. This does not include the oscillator which is built up separately.

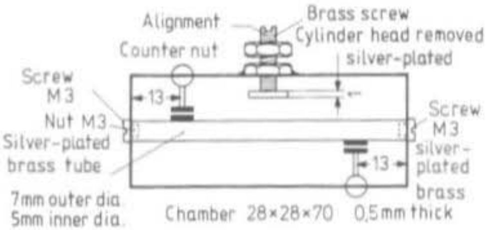

Fig. 13: Details of a λ/2 resonator

3. THE VHF RECEIVER

The VHF receiver to follow the described converter does not really need an especially high input sensitivity. However, since the VHF receiver is also to be used for direct reception of satellites transmitting in the satellite band of 136 to 138 MHz, two low-noise preamplifier stages equipped with the transistor BF 900 were used. These transistors require no neutralization, and very few external components, since source and gate 1 are grounded, and the bias voltage for gate 2 of all five amplifier stages of this type is generated commonly.

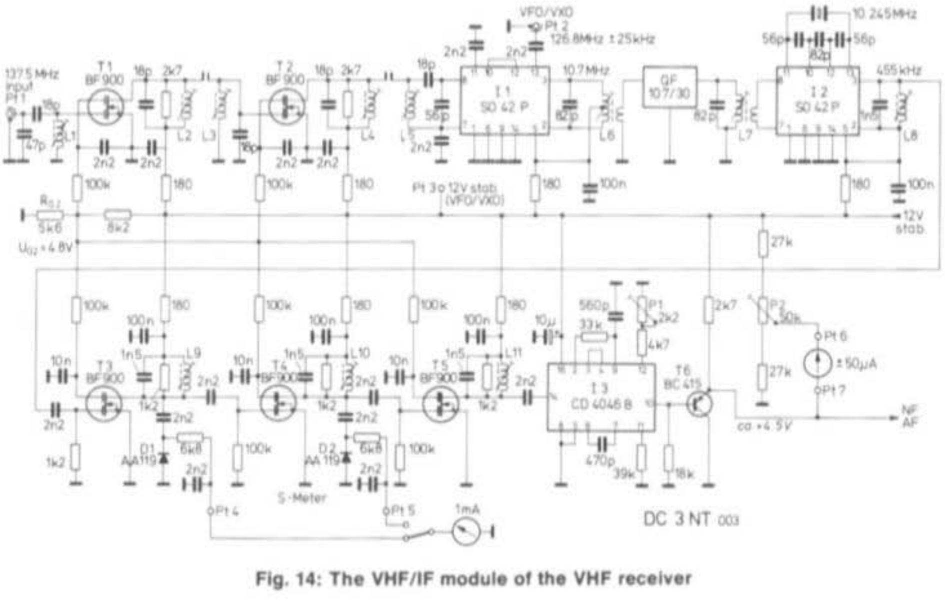

Fig. 14: The VHF/IF module of the VHF receiver

The circuit diagram of the VHF/IF portion of this receiver is given in **Figure 14**. The two band-pass filters for the input frequency (L 2 to L 5), whose coupling is given by their locations on the PC-board, can be tuned so that the whole VHF satellite band can be received. The high preamplification, and the active mixer are only advisable when, as in the case of the planned application, large-signal problems are not to be expected. The integrated mixer type SO 42 P (Siemens) allows a multiplicative conversion using very few components and low oscillator power.

The oscillator frequency should be 10.7 MHz below the input frequency, and its output voltage should be approximately 50 mV.

The various methods that can be used as oscillator were described in part 1. It was also mentioned there that a fixed, crystal oscillator was not advisable. The oscillator module to be described in part 3 uses a voltage-controlled oscillator (VCO), whose long-term stability will, of course, not be sufficient when used in a simple circuit. For this reason, the oscillator is swept when the squelch is closed, which means that the receiver will scan a frequency range of approximately 500 kHz when no input signal is present. When a signal is received, the squelch will open and the oscillator will be switched from the search to AFC mode. It will then tune automatically to the center of the discriminator characteristic. The only condition when using this concept is that no other signals are present in the frequency range of interest.

At the first intermediate frequency of 10.7 MHz, only a crystal filter having a bandwidth of 30 kHz, and two resonant circuits for matching are used. This is followed by a second, crystal-controlled mixer. The subsequent three 455 kHz amplifier stages are also equipped with the previously mentioned DG-MOSFET BF 900, and use resonant circuits having a bandwidth of approximately 40 kHz. No reactive problems are present, wideband noise is avoided, and limiting under overload conditions is made very symmetrically.

The following PLL-FM demodulator equipped with integrated circuit type 4046 (I 3) is to be discussed in more detail, since this technology seems to be hardly known in amateur applications. The advantage of this type of circuit is briefly that a higher AF signal-to-noise ratio will be achieved at low RF signal-to-noise ratios than when using conventional coincidence demodulators or ratio detectors. This advantage increases together with the modulation index. In the case of narrow-band FM communications (M = 1), a PLL-demodulator will not bring any great advantages, however, the gain in the case of APT-transmissions from satellites (M = 3.75) is considerable. For this reason, the author was able to measure a AF signal-to-noise ratio of 30 dB in conjunction with the described receiver when the IF signal-to-noise ratio was only 11 dB. For this reason, PLL-demodulators should offer great advantages for FM communications on the GHz bands. For example, modulation indexes of M = 10 to M = 15 are used at present on the 10 GHz band and represent ideal conditions for using a PLL demodulator.

In order to explain how this signal-to-noise gain is obtained, let us assume an extreme example: a VHF-carrier is modulated with a 1 kHz signal and a frequency deviation of 1 MHz. This means that a bandwidth of approximately 1 MHz is required and that a noise power with a bandwidth of 1 MHz is present at the input of the conventional FM demodulator together with the required signal **(Figure 15)**. Of course, it is possible to suppress the resulting AF noise voltage in a low-pass filter, but not completely. This is entirely different in the case of a PLL demodulator, whose block diagram is given in **Figure 16**.

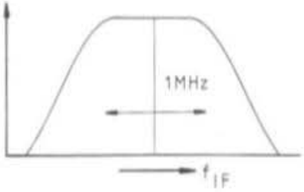

Fig. 15: Noise bandwidth = IF bandwidth

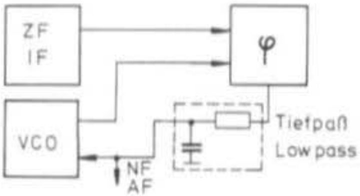

Fig. 16: PLL-FM demodulator

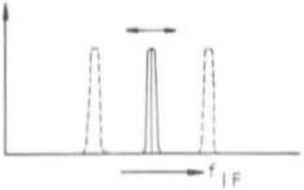

Fig. 17:
Noise bandwidth ≈ 2 x cutoff frequency of the lowpass filter

Without IF-signal, the VCO frequency will be at the center of the IF-passband curve; the low-pass filter connected to the phase discriminator will limit the noise-bandwidth to approximately twice the cutoff frequency of the low-pass filter. If a frequency modulated IF-signal appears, it will approach the VCO frequency, after which the control loop will lock in and the VCO-frequency will follow the IF-signal. This means that the modulation frequency thus appears as a control voltage. Due to the automatic following, it is possible for the cutoff frequency of the low-pass filter to be less than the IF-bandwidth (see **Figure 17**). This is the advantage of the PLL circuit and it can be seen how the advantages with respect to conventional FM demodulators will increase the higher the modulation index.

In the described METEOSAT-VHF receiver, an integrated MOS-circuit (I 3) is used as PLL-demodulator. The VCO frequency can be adjusted approximately from 400 to 500 kHz with the aid of potentiometer P 1. The low-pass filter is connected between connections 2 and 9. The output (connection 10) is connected via a buffer to the discriminator meter. The electrical center-point can be adjusted with the aid of P 2.

Now to the S-meter: The field strength of METEOSAT transmissions will be in a relatively narrow range, inspite of the different antennas and converters. For this reason, a conventional S-meter with an indication range of 80 to 100 dB will no longer be suitable. The very low differences in the indication would not be very helpful in adjusting the various parts of the system. For this reason, an S-meter with a linear scale is to be used. Two ranges are available: in the case of a high preamplification, it should be connected to Pt 4, if the gain is low or if high cable losses are present between the converter and VHF-receiver, the S-meter should be connected to Pt 5.

Figure 18 shows the circuit diagram of the AF-module. The most important part is a AF-filter that is formed by using a low-pass filter having a cutoff frequency of approximately 700 Hz, and a high-pass filter with a cutoff frequency of approximately 4 kHz. The APT-signal is present on a subcarrier of 2.4 kHz, with a maximum frequency deviation of 9 kHz. The frequency deviation determines the grey value: white = 9 kHz deviation; black approx. 1.8 kHz deviation. Since the highest modulation frequency of the subcarrier amounts to 1680 Hz, it is necessary for a AF-frequency band of 720 to 4080 Hz to be passed linearly subsequent to the FM-demodulator. The 2.4 kHz carrier together with its sidebands are present (with approximately 1 V at 9 kHz deviation) at connection Pt 8, which is connected to the AM-demodulator in the video processing unit. This completes the tasks of the receiver.

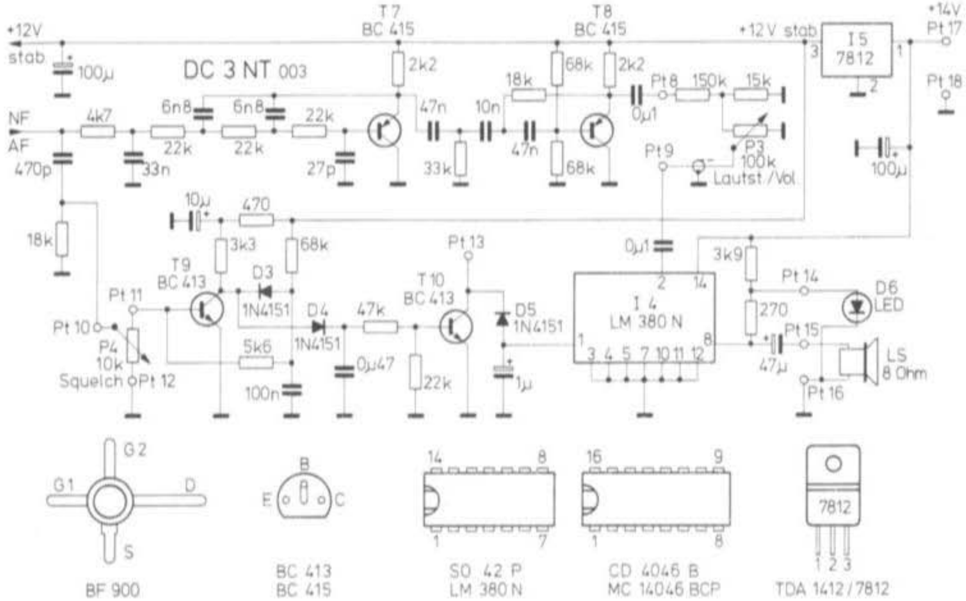

Fig. 18: AF-module of the VHF receiver

A cheap integrated AF-amplifier (I 4) is provided for monitoring the modulation of the input signal. Virtually no external components are required. In order to suppress the noise under no-signal conditions (squelch), a well-proved circuit using two transistors (T 9, T 10) is used. It is possible, for instance, to switch the video processor on and off with the aid of connection Pt 13. An LED (D 6) will light dimly when the squelch is closed, and will become bright when a signal is present.

3.1. Construction

A PC-board was developed for the VHF receiver. This board comprises components given in Figures 14 and 18. **Figure 19** shows the component locations and the conductor lanes of this single-coated board of 140 mm x 100 mm. The designation is DC 3 NT 003.

Figure 20 shows a photograph of the author's prototype. In order to simplify construction, ready-wound types were used for the 11 filter inductances. It is necessary to connect the two 2.7 kΩ damping resistors on the conductor side of the board below two of these inductances (L 2 and L 4). Since the remaining ground surfaces are rather small, it is important that the three ground bridges given in the component location plan are not forgotten. Furthermore, it is important to adhere exactly to the components information given in the following section, and possibly use a socket for I 3.

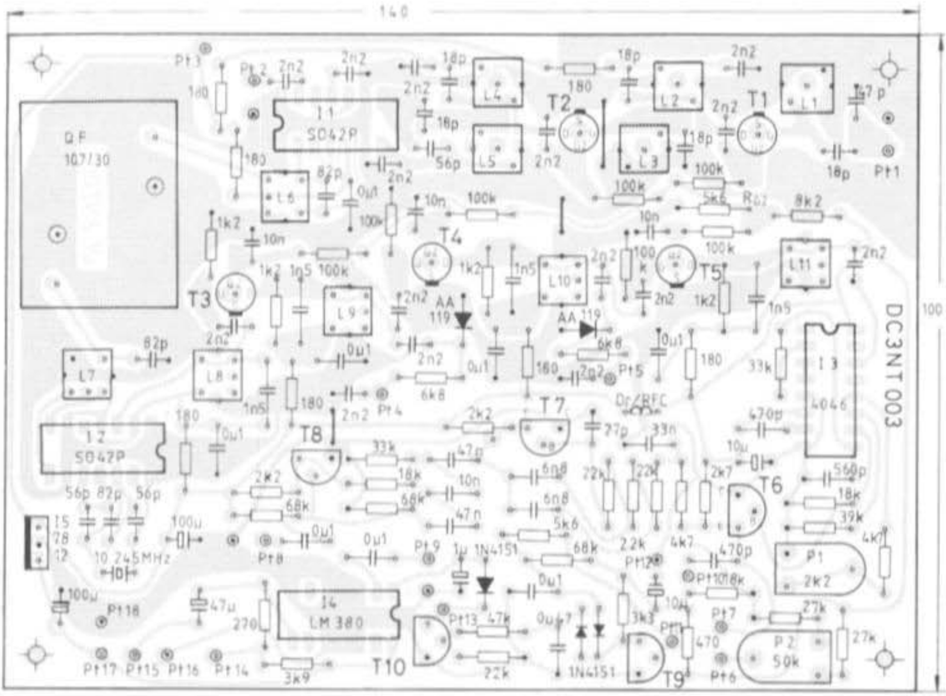

Fig. 19: Component location plan for the VHF-receiver DC 3 NT 003

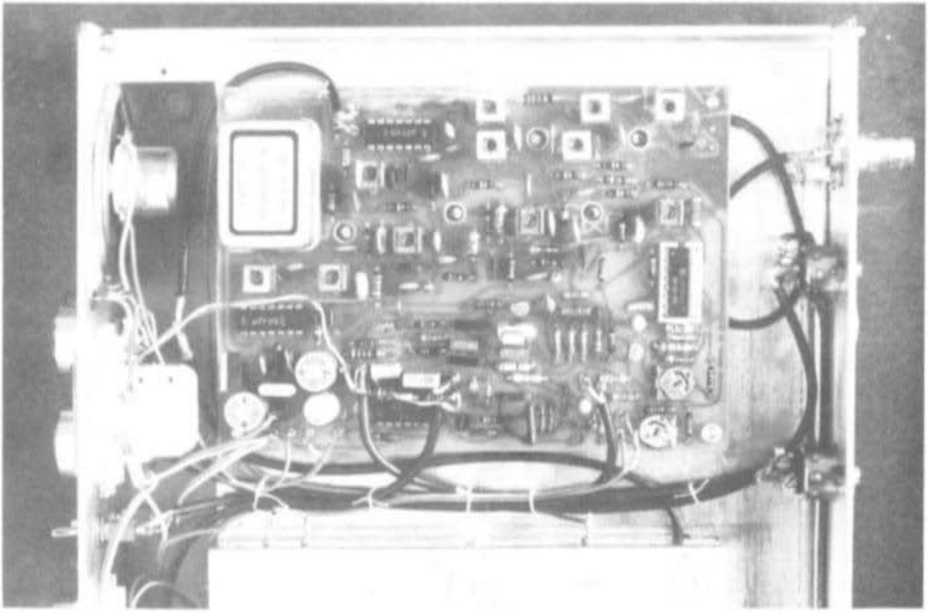

Fig. 20: Photograph of the author's prototype

3.2. Special Components for DC 3 NT 003

T 1 - T 5:	BF 900 (Texas Instruments)
T 6 - T 8:	BC 415, BC 308 or similar PNP-AF transistors
T 9, T 10:	BC 413, BC 238 or similar NPN-AF transistors
D 1, D 2:	AA 119 or similar germanium diode
D 3 - D 5:	1 N 4148, 1 N 4151 or similar silicon diode
D 6:	Any LED
I 1, I 2:	SO 42 P (Siemens)
I 3:	CD 4046 B (RCA) MC 14046 BCP (Motorola)
I 4:	LM 380 N (National Semicond.)
I 5:	7812 or TDA 1412 or similar 12 V stabilizer
RFC:	Miniature choke, value uncritical
L 1 - L 5:	Pre-aligned, screened filter inductances (NEOSID 005118 silver)
L 6, L 7:	as L 1, with tap and coupling link (NEOSID 005138 blue, red, white)
L 8 - L 11:	as L 1, for 0.1 - 3 MHz (NEOSID 005960 black, red, red)
Crystal filter:	Center frequency 10.7 MHz; bandwidth: 30 kHz
Crystal:	10.245 MHz, HC-18/U, parallel resonance 30 pF
P 1, P 2:	Trimmer potentiometer, horizontal mounting, spacing 10/5 mm
P 3, P 4:	Potentiometers on the front panel

All fixed resistors: carbon resistors, for 10 mm spacing.
All capacitors below 100 pF: ceramic disk types with low TC-value, spacing 5 mm.
All capacitors from 470 pF to 1500 pF: Styroflex, spacing 7.5 or 10 mm.
Capacitors between T 6 and T 9: Plastic foil capacitors, spacing 7.5 mm.
Bypass and coupling capacitors between 2.2 nF and 100 nF: ceramic, spacing 5 mm.

Tantalum electrolytics, drop-type, 1 x 1 µF, 2 x 10 µF
Aluminium-electrolytics, round, spacing 5 mm: 1 x 47 µF, 2 x 100 µF (16 V)

3.3. Alignment of the VHF-Receiver

The IF-chain is aligned firstly. This is achieved by feeding in a 10.7 MHz signal to the coupling link of L 6 in the vicinity of the crystal filter. If the calibration of the signal generator is not exact enough, it should be used in conjunction with a frequency counter since the injected frequency should be exact to within ± 1 kHz. A tube voltmeter or oscilloscope provided with a 10 : 1 probe can be used for monitoring the signal. The probe is firstly connected to gate 1 of transistor T 3 and L 7 and L 8 tuned for maximum reading. The indicated voltage should not exceed approximately 1 V (peak-to-peak value). Reduce the output voltage from the signal generator on achieving this value.

A 5 kΩ potentiometer is now soldered temporarily in parallel to R_{G2} (5.6 kΩ). This allows the gain of the five RF-transistors to be reduced. The probe is connected to gate 1 of T 4, and inductance L 9 aligned for maximum reading. If the indicated voltage is greater than 3 V (peak-to-peak), it is necessary for the gain to be reduced with the aid of the potentiometer.

Inductances L 10 (probe to G 1 of T 5) and L 11 (probe to pin 14 of I 3) are now aligned one after another in the same manner for maximum reading. The circuits have a very wide resonance; it is not intended for them to provide adjacent selectivity. However, attention must be paid during alignment to achieve a flat top. Of course, this alignment is simplified greatly using a swept-frequency generator, and such an alignment is carried out in the same manner. The output coupling is then made via approximately 1 kΩ, and the alignment made to obtain a flat top of the passband curve.

This is followed by aligning the PLL-demodulator. For this, a signal of exactly 10.7 MHz is injected, and a high-impedance DC-voltmeter connected to pin 2 of I 3. The VCO frequency is now aligned with the aid of P 1 to the frequency of the signal generator. Half the operating voltage (6 V) will appear at pin 2 when both frequencies coincide. Finally the reading of the discriminator meter should be adjusted to provide a center reading with the aid of P 2.

The VHF-stages can now be aligned after connecting a local oscillator to Pt 2 and ground. The signal generator is aligned to 137.5 MHz and connected between Pt 1 and ground. It is only necessary to align inductances L 1 to L 6 for maximum reading on the S-meter. A swept-frequency alignment will only then be required when the receiver is to be used over the whole satellite band from 136 to 138 MHz.

REFERENCES TO PART 2

(1) J. Dahms: A Converter for the 13 cm Band
Part 2: The Local Oscillator Module
VHF COMMUNICATIONS 10, Edition 1/1978, pages 18 - 22

(2) K. Hupfer: An SHF Wavemeter
VHF COMMUNICATIONS 7, Edition 2/1975, pages 90 - 92

(3) R. Best: Theorie und Anwendung des PLL
AT-Verlag Stuttgart

BIG WHEEL
An Omnidirectional Antenna for the 23 cm Band

by Th. Morzinck, DD 0 QT

A BIG WHEEL antenna for the 23 cm band was mentioned in a previous article dealing with repeater stations on the 23 cm band (1). The large number of letters requesting further information on this antenna showed that there was great interest in this special type of antenna.

Unfortunately, omnidirectional antennas for horizontal polarization are more difficult to achieve than their vertical counterparts, and they are used far less (5). Canted dipoles, halos, maltese crosses, double helicals (2), slotted antennas (3), and groups of antennas (4), as well as the Big Wheel are all known constructions. Many of these antennas exhibit a poor omnidirectional characteristic, have a negative »gain«, or are very difficult to construct, as is the case with the double helix or slotted antenna.

The Big Wheel has proved itself as a good compromise on the 23 cm band since it can be constructed easily with a soldering iron, wire, and a pair of pliers. It is also possible for the individual antenna to be extended to form a compact stacked array.

The designation »Big Wheel« comes from the shape of the antenna. In principle, the antenna comprises three full-wave loops that are connected in parallel at the feedpoint. The outer circumference of the wheel comprises three $\lambda/2$ radiators, and the »spokes« of the wheel are the $\lambda/4$ feeders to the central feedpoint of the antenna. Actually, the antenna is not round but is more in the form of a three-leaf clover.

Each of the loops is connected in parallel, with one end of the loop connected to the center conductor and the other end grounded to the outer conductor. This can be seen easily in the drawing given in **Figure 1**. It is then matched to 50 Ω using a stub.

CONSTRUCTION

All the author's prototype antennas have been constructed in conjunction with a BNC-connector for single-hole mounting, (UG-1094, UG-625). Of course, it is just as easy to use a similar TNC-type (similar to BNC but with a screw fitting instead of a bayonet); this connector is somewhat more stable due to the screw fitting. Larger connectors such as N, C, 3.5/9.5 or 6/16 would probably require the antenna to be redimensioned, since it has been found that the connector has a considerable effect on the feedpoint impedance of the antenna. The following dimensions are therefore only valid for construction when using a BNC or TNC connector.

Firstly, a nut and the supplied spring washer are screwed right onto the connector, and can be used later for mounting. A second nut is screwed onto the thread so that only the PTFE part protrudes (see **Figure 2**). Attention should be paid that only connectors with PTFE insulation are used, since other insulating materials may not be able to stand the heat effects during soldering. The second nut is then soldered around the edge of the thread with sufficient solder so that it forms a type of flange, onto which the ground ends of the three loops can be soldered.

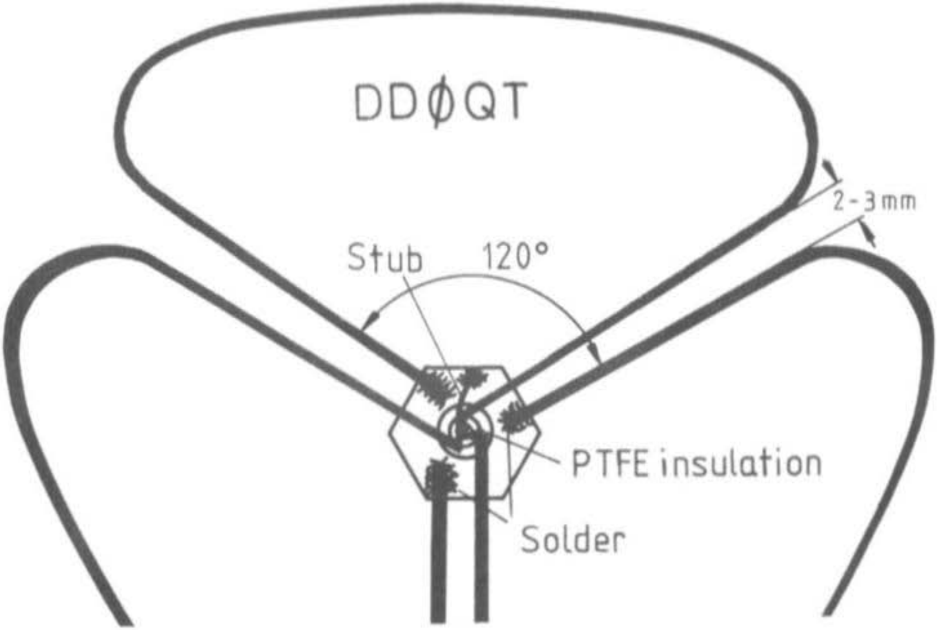

Fig. 1: A Big Wheel antenna for the 23 cm band as seen from above. Individual elements to scale. The ground ends are soldered to the flange (nut); the hot ends are soldered into place at the side of the inner conductor

The actual λ-loops are constructed from 1.5 mm diameter silver-plated copper wire, which can be easily bent into the required shape. However, this is only valid for antennas that are to be built up inside some form of weather-proofing. A Big Wheel constructed in such a manner was used at the repeater station DB 0 YM unprotected. The antenna was only able to stand this treatment for one week, after this, rain, storm and birds (!) had completely destroyed this copper-wire antenna. This means that if the antenna is not to be protected in some form of plastic covering, it will be necessary for it to be constructed from a stronger material.

Each of the λ-elements is made from a length of 22.2 cm. Attempts made with 23.5 cm, 23.0 cm and 22.5 cm showed that the length must be accurate to within a mm ! It was only possible to obtain resonance in the 23 cm band after shortening the elements from 22.5 to 22.2 cm.

Firstly, the three straight wires are soldered to the flange (nut) at an angle of 120° to another :

- The wires should not point directly to the inner conductor, but slightly to the side. Only then will it be possible to obtain the correct spacing of the λ/4 feeders (spokes) of 2 to 3 mm (see Fig. 1).
- The wires should be placed right up to the teflon portion and soldered into place on the nut flange. This is important with respect to the length.

After this, the straight wires should be bent to the required shape according to the drawings. The »hot« ends are not simply soldered to the inner conductor, but are fed parallel and at the same height as the ground end of the neighbouring loop up to the conductor and bent up just before the flange. This construction will be seen more clearly in **Figure 2**. After placing the three hot ends into place at the side of the inner conductor, they can be soldered into position. The antenna should now be approximately as shown in Figure 1.

This description has been made rather extensively since it has been found that most of the queries have been made about this, or this is where most of the faults have been made.

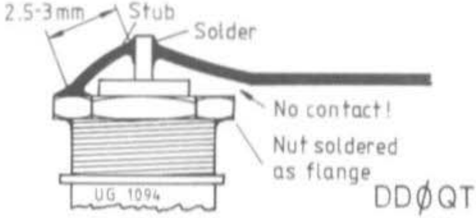

Fig. 2:
Side view of the connector: showing the hot end of an element and the stub

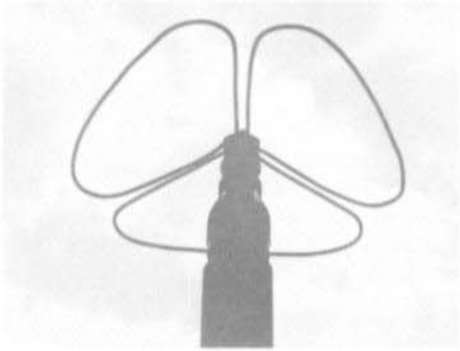

Fig. 3: Photograph of the author's prototype

ALIGNMENT

In order to match the three parallel-connected loops to an impedance of 50 Ω at the connector, a stub is connected between the inner conductor and ground flange (nut). In the case of such an antenna for 144 MHz, this part is made from a U-shaped strip. Experiments made with such miniature stubs were not successful at 23 cm. Correct matching was not obtained until a silver-plated copper wire of 1 mm diameter was connected just like a short circuit between inner and outer conductor as can be seen in Figure 2.

A somewhat longer piece of wire is firstly bent slightly and soldered into place beside one of the three ground ends of the loop on the flange. The wire is then placed over the »hot« end of the same loop directly adjacent to the inner conductor of the BNC-connector and soldered into place. The protruding ends can then be removed.

This should result in an effective »free space« length of 2.5 to 3 mm (uncritical). This »short circuit« stub was not readily accepted by a number of constructors, but has been proved in practice since by the large number of constructed antennas.

The antenna is completed after mounting the stub in the described manner. The resonance will be in the order of 1270 MHz, which means that it is in the center of the band. A large number of constructions made without measuring means have shown that both the resonant frequency and standing wave ratio are reproducible **(Figure 3)**.

A fine alignment can now be made in conjunction with the required measuring equipment by bending the loops towards, or away from another. The following relationships result:

- Bending together: In this case, the λ/4-pieces (spokes) remain parallel up to the end. The resonant frequency will fall, and the antenna will become narrow-band (several MHz).
- Pulling out: In this case, the loops are brought from their triangular shape more towards a round circle; this increases the bandwidth of resonance, and the frequency will increase !

It was not possible for the author to measure the effects this had on the omnidirectional characteristic. When using this antenna at 1296 MHz, the author recommends that a wire length of 22.0 cm to be used and for the loops to be bent somewhat together. For other applications such as ATV, and repeater communications, the shape and sizes given in the diagram and photograph should be favorable.

NOTES

Unfortunately, measurements of the omnidirectional characteristic and gain of the antenna could not be carried out. A stacked array of two Big-Wheel antennas exhibited approximately the same gain as a HB 9 CV antenna. The gains given in (2) of 3 or 5.7 dB respectively are most certainly too high.

At present, a stacked array is being tested whose BNC-connectors face another. The stacking distance amounts to 14.5 cm. The author used two BNC-connectors for connection of the somewhat thicker cable RG-59/U (75 Ω) which are then mounted with the aid of a bracket as shown in **Figure 4**. The cable between the two plugs is used as matching transformer using the 75 Ω cable RG-59/U. The overall length is an electrical 1.5 λ (velocity factor 0.66). An impedance of 50 Ω is present at the center, i.e. at 3/4 λ, where it can be connected to a 50 Ω feeder.

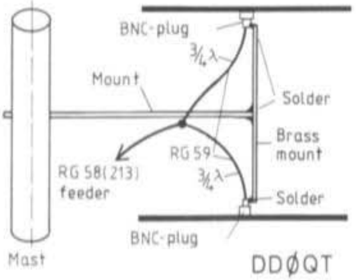

Fig. 4: Side view of a stacked array of two Big Wheels

Special attention must be paid that the two antennas are excited at the same phase when viewed from above or below. This means that the loops must be in the same direction from ground to inner conductor. In the case of the construction shown in Figure 4, it is necessary for the two antennas to be constructed in an opposite manner, so that the loops have the same phase, even though the connectors are opposite. The matching of such an array was such that the reflected power at 1270 MHz was only one thousandth of the forward power.

Of course, it is also possible for other mountings to be made that are able to utilize the two additional nuts on the BNC-connectors.

A protective case should always be used when the antenna is to be mounted outdoors. In its simplest form, this can comprise a plastic bag, however, this will not last very long. An individual Big Wheel antenna can easily be mounted in deep-freeze boxes, and the stacked array in a plastic bucket (both should be mounted with the cover below). However, the rings that are provided on the bottom of such containers for stability should be removed so that no water, snow etc. is captured. An antenna protected in such a manner was mounted by the author in an aggressive atmosphere at the side of chimneys and ventilation shafts. The antenna was as good as new after being removed from the »bucket«. This also ensures that the Big Wheel is not inoperative for several months during the winter due to icing.

The effects of different material thicknesses, as well as the characteristics of a very interesting antenna comprising four stacked antennas were not examined.

A very interesting construction was made by a number of Bochum radio amateurs who held a rally to increase activity on the 23 cm repeater. In the case of these mobile antennas, the »spokes« were not placed beside each other but above each other. In the case of this type of construction, both ends of the loop can directly face the central point, i.e. the inner conductor, and not to the side of it. However, the spacing between each of the $\lambda/4$ pieces was also maintained at 2.5 to 3 mm.

The author feels that this article can form the basis of further experiments in this field.

The author would like to thank DC3QS for assistance during measurements and experiments.

REFERENCES

(1) Th. Morzinck: Technology and Frequency Plan for Repeaters in the 23 cm Band
VHF COMMUNICATIONS 11, Edition 2/1979, pages 97 - 102

(2) K. Rothammel: Antenna Book
Stuttgart 1973, pages 377 - 389

(3) G. Körner: A Stacked Tubular Slot Antenna for the 23 cm Band
VHF COMMUNICATIONS 7, Edition 2/1975, pages 103 - 105

(4) H. Spreckelmann: 13 cm Wide-angle and Omnidirectional Antennas
DUBUS-Info 4/1978, pages 246 - 247

(5) Information: DX-Repeater DB 0 DX on the Feldberg (Taunus)
cq-DL 1/1974, page 46

(6) A. Schoening: Die Ballon-Starts der Mirabel-Transponder in Frankreich
cq-DL 8/1974, pages 471 - 477

(7) R. Olsson: SK 7 VHF
DUBUS-Info 2/1976, page 63

A TRANSCEIVER FOR THE 10 GHz BAND

by J. Reithofer, DL 6 MH

An increasing activity will be noted on the GHz-bands such as 23 cm and 13 cm, especially during SHF contests. A questionaire sent to the readers of UKW-BERICHTE showed that there was a great interest in the SHF-bands. The increase in interest in the 10 GHz-band (3 cm), rose considerably after it was introduced into Germany by Dr. Dain Evans, G 3 RPE at the Munich VHF/UHF convention in 1976. At the following VHF/UHF convention in 1978, G 3 RPE showed an extremely simple, but reliable transceiver for the 3 cm band, whose concept was the result of years of experience and numerous experiments. This transceiver is now to be described in a manner that can be constructed practically by any radio amateur that is able to use simple tools. It is only necessary for him to purchase the waveguide profile, mixer diode and Gunn element. All other parts can be made in the shack. This is the reason why the 3 cm band can be classed as a real »amateur band«.

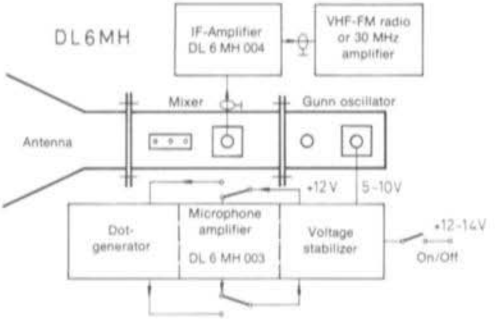

**Fig. 1:
A 10 GHz transceiver
for wideband FM**

Figure 1 shows the overall simple transceiver in the form of a block diagram, and **Figure 2** shows the photograph of the author's prototype. A free-running, mechanically-tuned Gunn oscillator is in operation both in the transmit and receive modes. A receive mixer is screwed on, which consumes a portion of the oscillator power. The rest is transmitted with the aid of an antenna. The antenna is also operative in the receive mode.

A PC-board accommodates the circuits for the voltage supply, and modulation of the Gunn oscillator. An integrated voltage-stabilizer is used whose output voltage is adjustable, and the modulation voltage is fed to its control electrode. Modulation can be made either from a microphone, or dot-generator. These dots are pulses having a duration of approximately 150 ms at a frequency of 500 Hz. They are used for finding the frequency and direction of the distant station. One will hear one's own dots when a carrier is received in the 3 cm band.

This means that it is possible to find even very weak signals. If the partner station possesses an identical transceiver, one will hear one's own dots when the partner station is tuned to the correct frequency. When the dots are audible at both ends of the system, the transmit frequencies will be spaced from another at the value of the intermediate frequency used, and it will then be possible to switch to the voice mode and carry out duplex communications.

An IF-amplifier for improvement of the sensitivity of the subsequent receiver, as well as an FM-receiver, complete the 3 cm station. Now to the intermediate frequency: Technically speaking, the two intermediate frequencies used at present of 30 MHz and 100 MHz are equally good. (In order to obtain a sufficient image rejection, it would be necessary to use a far higher intermediate frequency). A 100 MHz IF can be realized easily since any good VHF-FM broadcast receiver can be used. A cheap car radio is especially suitable since its metal case forms an effective screening and allows 10 GHz operation to be made even in the vicinity of VHF-FM broadcast transmitters.

When using equipment similar to the concept described here in conjunction with conventional transistorized radios, the author and many other radio amateurs have carried communications on a number of occasions over distances of up to 250 km from mountain to mountain.

However, if the partner station is equipped with a commercially available 10 GHz transceiver (so-called Gunnplexer), it is recommended that an IF of 30 MHz is also used since these units are only designed for this intermediate frequency, and cannot be tuned over a wider range.

If a wideband IF-preamplifier is used that is able to work on 30 MHz and 100 MHz, it will be possible to connect a receiver for both frequencies.

The construction of the 10 GHz transceiver is now to be described: For clarity, it is to be split into the various modules: microwave module, power supply and modulator, and IF-preamplifier.

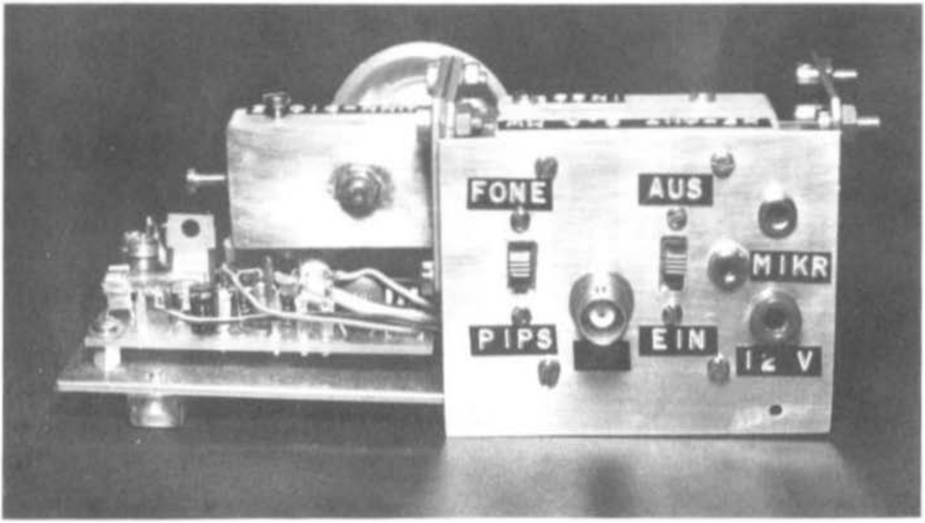

Fig. 2: Photograph of the author's prototype

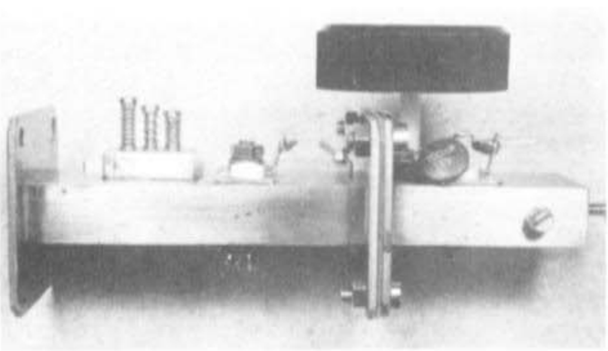

Fig. 3:
The microwave portion:
Gunn oscillator and mixer

1. MICROWAVE MODULE

Figure 3 shows the photograph of the author's prototype, and **Figure 4** gives the positions of the individual parts and the main dimensions. The individual parts – without standard parts such as screws and nuts – are given in **Figure 5**; the screws, nuts and waveguide (R 100 / WG 16 / WR 90) are made from brass. The only exception to this is the tuning screw (part L), which is made from PTFE. In addition to this, four plastic screws and two pieces of mica or PTFE-foil are required. The latter is now often used by plumbers for sealing the screw connections between pipes.

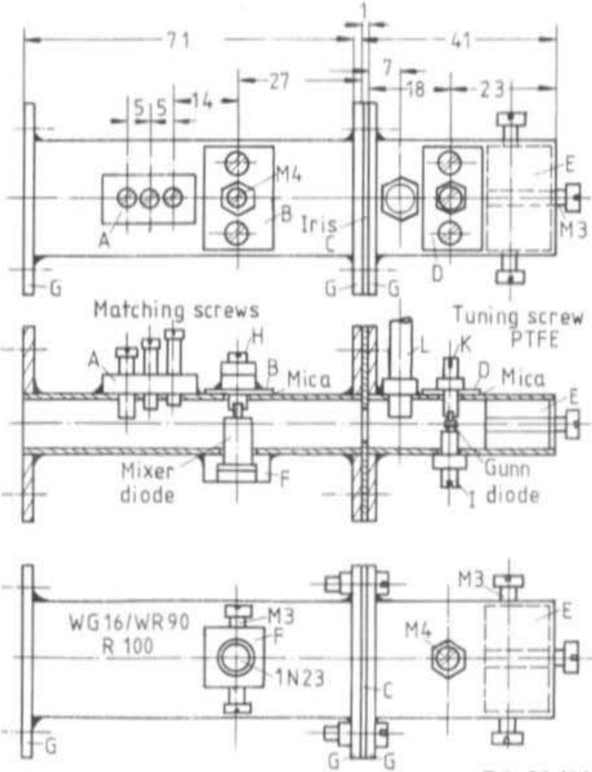

Fig. 4:
Individual parts and dimensions of the microwave module

DL6MH

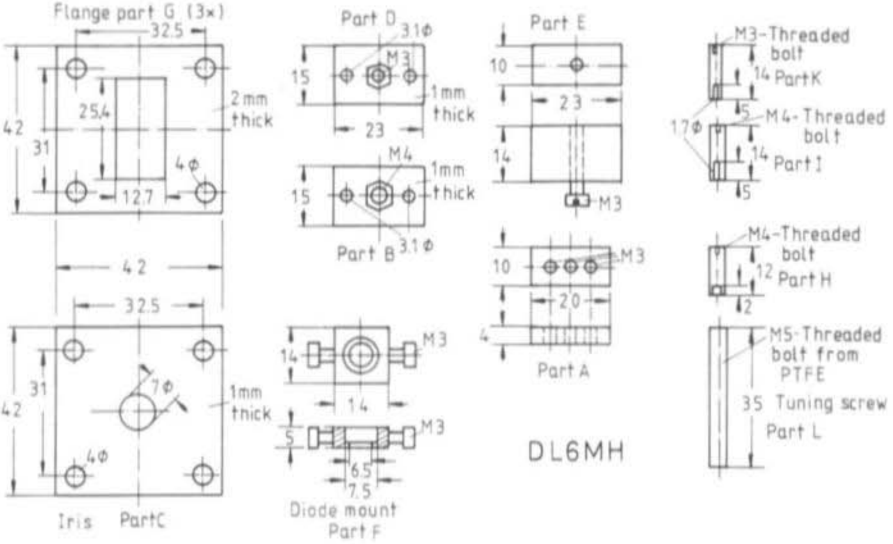

Fig. 5: Parts of the microwave module of the 10 GHz transceiver

The given dimensions must be maintained during construction. The frequency-determining cavity of the Gunn oscillator is between the Gunn element and the iris (part C). The iris covers a certain portion of the resonator; a large aperture results in a higher output power, a small aperture will offer a higher frequency stability. A diameter of 7 mm represents a good compromise.

The cavity behind the Gunn element is sealed with a variable plunger made from a brass block (part E). After aligning for maximum output power, this part is clamped into position with the aid of the two M 3 screws at the side. These plungers should fit as tight as possible in the waveguide. For this reason, it should be worn down with emery cloth on a flat surface after cutting with a metal saw so that it fits exactly into the waveguide.

The Gunn-element is placed in an axial, 5 mm deep hole of 1.7 mm diameter between the two threaded bolts I and K. The two bolts must be exactly in the same axis so that the Gunn element is not mechanically loaded and destroyed when inserted into place. This is made by firstly drilling a 2.5 mm hole in a single process through both walls of the waveguide, and extending the hole for part I to a diameter of 3.5 mm. This is followed by cutting a M 3, or M 4 thread respectively. The nut for the M 4 bolt is soldered into place on the outside of the waveguide. Do not forget to screw the nut tightly into place before soldering. The M 3 nut should now be soldered into place on the small brass plate »D«.

This part is insulated from the waveguide with the aid of a mica disk or PTFE-foil, and mounted into place using two plastic screws (M 3 or M 4). The capacitor formed in this way bypasses the Gunn oscillator for the highest frequency. In order to avoid excitation at lower frequencies, and also to protect against any voltage peaks, a RC-link of 100 nF and 100 Ω is connected between this plate and ground (waveguide). Finally, it should be mentioned that the plastic screws should not protrude into the waveguide, but should be shortened so that they are a level with the inner surface of the waveguide. A solder tag should be soldered to the brass plate to feed in the operating voltage of the Gunn-element.

The Gunn oscillator is tuned with a PTFE M 4 or M 5 bolt. This part »L« is placed in a guide which is provided by a suitable nut soldered to the outside of the waveguide as shown in Figure 4. A further nut at the side of the flange will improve the guide. It is then possible for a large knob to be provided, or, if preferred, a slow-motion drive can be used. In the case of the author's prototype, a M 5 PTFE screw provided a frequency range of 10.2 to 10.5 GHz.

The screwing of the waveguide flange (part G) to the iris is only shown briefly in Figure 4, otherwise has been deleted for clarity. Normal soft-soldering is completely sufficient for mounting the flange to the waveguide. The rectangular cross-section of the flange should be kept as small as possible so that it fits tightly onto the waveguide. This simplifies soldering into the correct position.

The front, left-hand part of the waveguide module is the mixer. This module mixes the frequency of the Gunn oscillator with the receive frequency from the antenna.

The passive mixer operates with point-contact diodes of the well-known series 1 N 23 C - F. The higher the last letter is in the alphabet, the lower will be the noise-figure of the diode. The spacing of the iris to the center line of the diode amounts to 27 mm. It can be seen from the illustrations that one end of the diode (cap) is placed in a brass block (part F) and is grounded (waveguide). The other end (pin) is placed in a threaded bolt (part H), which possesses a hole of 2.5 mm diameter in an axial direction. This threaded bolt is held in a M 4-nut that is soldered onto a small brass panel (part B). A second nut is used for countering. Part »B« is insulated from the waveguide in a similar manner to part »D« of the Gunn oscillator using a mica disk or PTFE-foil, and this also provides the bypass for SHF. Two plastic screws (M 3 or M 4) are also used here for mounting the metal plate to the waveguide, and these should also not be allowed to protrude into the waveguide. Suitable threaded holes should be provided in the waveguide for them.

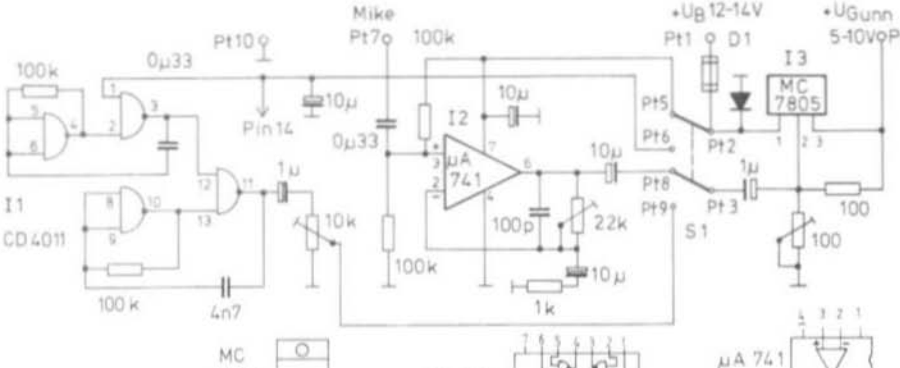

Fig. 6: Voltage stabilizer with modulator and dot-generator

Three M 3 screws are provided in the brass block (part A) between the mixer diode and the antenna flange, which are used for optimizing the matching of the mixer diode. As can be seen in Figure 3, it is possible for these screws to be spring-loaded so that the adjustment is not altered by shock or by vibration.

A DC-current of 1 to 2 mA should flow through the mixer diode, which can be aligned with the aid of the matching screws. After optimizing the receive sensitivity, a few mW of oscillator power will be consumed by the mixer diode, which means that approximately 2 to 6 mW remain for transmitting according to the Gunn element used. One may think that this is too low, but experience has shown, and confirmed by calculation (1) that even the furthest line-of-sight communication can be made when antennas with a gain of up to 30 dB are used.

Finally, it should be mentioned that Gunn elements with a higher power than approximately 15 mW are not suitable for use in this transceiver concept. Furthermore, this unit is also suitable for amateur television communications after a few modifications and additions. The author has already transmitted CCIR-standard colour television transmissions using this system.

2. POWER SUPPLY AND MODULATOR

The simple circuit of this module is given in **Figure 6**. The dot-generator operates using an integrated four-gate circuit in C-MOS technology (I 1); the two upper gates in the circuit diagram are used to generate the slow pulse sequence and the two lower ones for the fast mode. Both are added and fed via the level potentiometer P 1 to the voltage stabilizer I 3, which is »misused« here as modulator. A cheap operational amplifier type 741 (I 2) is used for amplifying the NF-signal from the microphone. A frequency-dependent feedback is adjustable with the aid of P 2. A protection against incorrect polarity is provided at the voltage stabilizer and the most favorable operating voltage for the Gunn element used can be set with the aid of P 3. **Figure 7** shows a small single-coated PC-board with the designation DL 6 MH 003 which is designed for accommodation of these circuits.

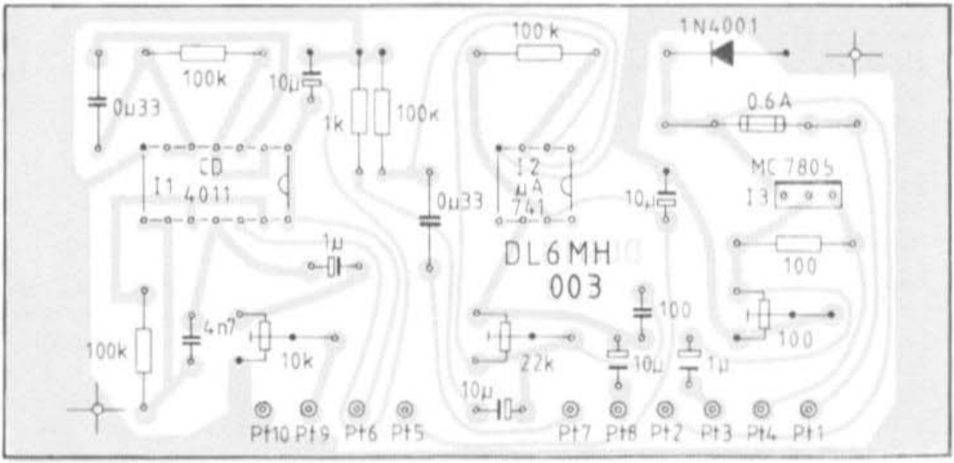

Fig. 7: PC-board of the voltage stabilizer and modulator

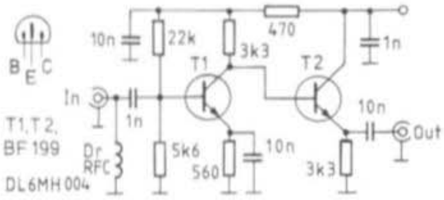

Fig. 8:
An aperiodic IF-preamplifier

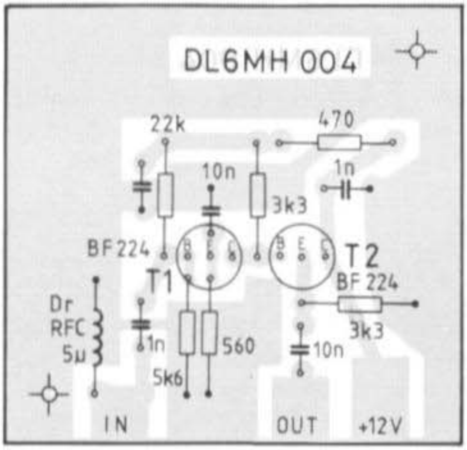

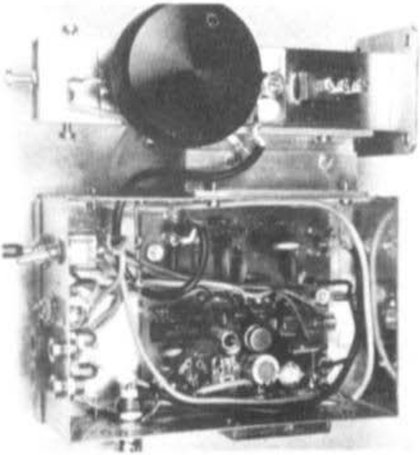

Fig. 9:
PC-board for the IF-amplifier

Fig. 10:
One of several possibilities to construct the 10 GHz transceiver

3. IF-PREAMPLIFIER

Since the sensitivity and gain of most VHF-FM radios, and 30 MHz amplifiers is too low, a preamplifier is provided between the mixer diode and the IF-receiver. Since this preamplifier is mounted directly adjacent to the mixer diode, the adverse effects of the coaxial cable to the subsequent receiver are avoided. **Figure 8** shows the circuit diagram of a very simple, two-stage, untuned amplifier that can be used for all intermediate frequencies. The DC-current for the mixer diode flows via the choke at the input; it is possible for this current to be measured at the ground-end after this has been disconnected and bypassed. A small PC-board suitable for accommodating this preamplifier is shown in **Figure 9**.

Editorial Note: The amplifier equipped with a FET transistor type E 300 described in (2) is also very suitable for use as IF-preamplifier for 100 MHz. A lower-noise, wideband amplifier is the two-stage preamplifier equipped with transistor types BFT 66 and BFR 34 A described in (3). However, if the lower limit frequency is to be reduced to less than 30 MHz, the inductance values of the chokes should be increased to approx. 3.3 µH or more, as well as the capacitance values of the coupling and bypass capacitors (100 pF or 10 nF), and furthermore the number of turns on the ferrite transformers should be doubled (from m = 3, n = 5, R = 1 to m = 6, n = 10, R = 2).

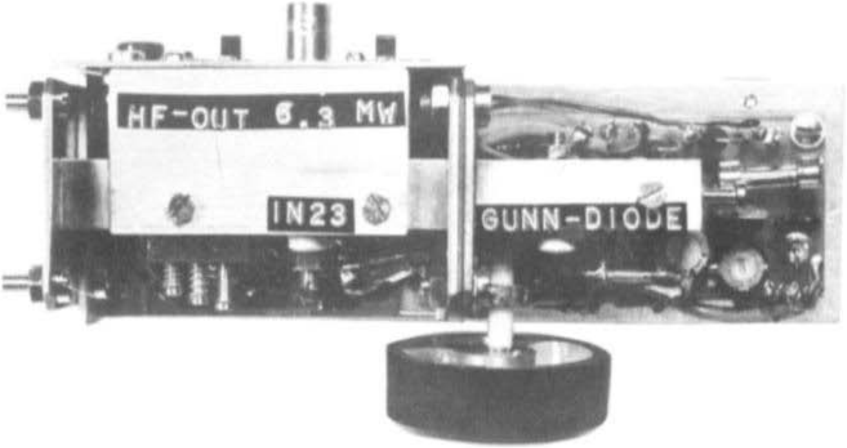

Fig. 11: Another form of construction

4. FINAL NOTES

The PC-board, switches and connectors can be accommodated in a metal case **(Figure 10)** or grouped around the waveguide **(Figure 11)**. A 5 mm thick metal plate can be provided with a thread suitable for a camera tripod onto which the transceiver can be mounted. For radio amateurs new to this technology, it is recommended that a horn-radiator as described in (4) be used. This can be made from tin plate, or from single-coated PC-board material. If there is sufficient interest, the construction of a highly-efficient parabolic antenna will be described later.

5. REFERENCES

(1) D. Vollhardt: The 10 GHz Amateur Band –
Considerations of Present and Future Technology
VHF COMMUNICATIONS 10, Edition 4/1978, pages 244 - 251

(2) B. Heubusch, Dr. Ing. A. Hock, H. Knauf: A Transceiver for 10 GHz – Part 3
VHF COMMUNICATIONS 9, Edition 4/1978, pages 247 - 255

(3) M. Martin: A New Type of Preamplifier for 145 MHz and 435 MHz
VHF COMMUNICATIONS 10, Edition 1/1978, pages 30 - 36

(4) T. Kölpin: Further Data for the Construction of Horn Antennas for the 10 GHz Band
VHF COMMUNICATIONS 9, Edition 3/1977, page 167

SINGLE-STAGE 15 W LINEAR AMPLIFIER for the 2 m BAND

By M. Ulbricht, DB 2 GM

There are a large number of small portable and mobile transmitters having an output power of 2 to 3 W. Since there is a requirement to increase this to a higher output power for certain applications, the author designed a small linear amplifier having an output power of approximately 15 W at an operating voltage of 12 to 14 V. This amplifier is suitable for all operating modes and can be used universally due to its built-in RF-VOX circuit and antenna change-over relays. Since the linear amplifier was mainly to be used in the SSB mode, special attention has been paid to obtain good linearity. The description is to be given in more detail than would be absolutely necessary for experienced VHF amateurs, so that even newcomers will be able to construct this amplifier without problems.

1. CIRCUIT DESCRIPTION

As will be seen in **Figure 1**, a portion of the drive power is fed via the coupling capacitor C 1 to a voltage doubler circuit. The positive DC-voltage at the base of T 1 allows transistors T 1 and T 2 to conduct and energizes the three miniature relays Rel 1 to Rel 3. This connects the input and output connectors to the power amplifier equipped with transistor T 3, and the base voltage divider of this transistor will receive the operating voltage via relay Rel 2.

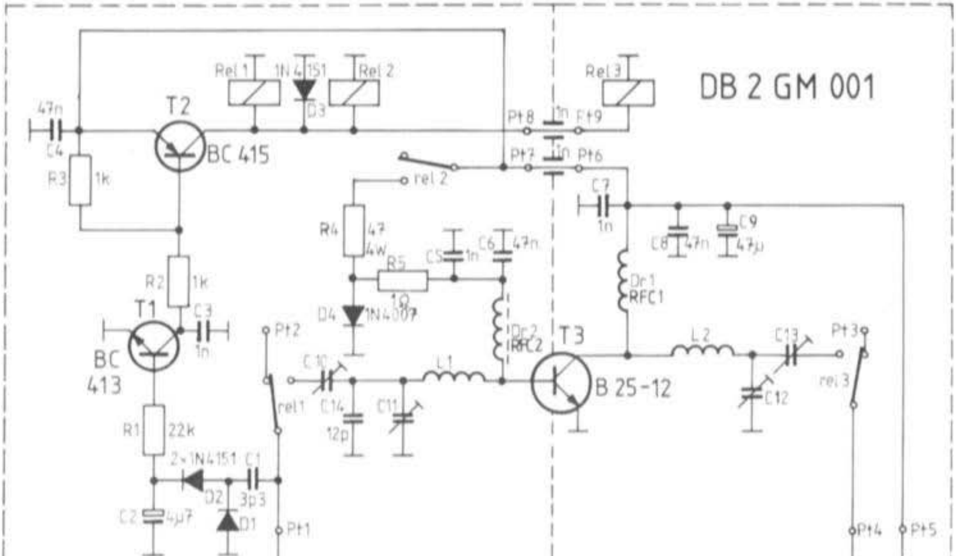

Fig. 1: Circuit diagram of the single-stage 15 W linear amplifier

It is now possible for the main component of the drive power to be fed via Rel 1 and the input matching network (C 10, C 11/C 14, L 1) to the power transistor T 3. The network comprising L 2, C 12, C 13, at the collector matches the output impedance of T 3 to the antenna (50 Ω). The operating voltage of the transistor is fed via choke RFC 1, and all frequencies that can occur on the voltage line are bypassed using capacitors C 7 to C 9.

The power transistor requires a base bias voltage of approximately 0.7 V in order to operate in the linear mode. This voltage must be very stable, if the input signal is to be amplified at low distortion. For this reason, a low-impedance voltage divider comprising the dropper resistor R 4 and diode D 4 allow a relatively high pass current of 300 mA to flow. This means that the fluctuating base current caused by the voice modulation will only cause a small variation of the bias voltage.

The pass current for the base bias voltage is switched off by relay Rel 2 in the pauses between transmission (receive mode). It is assumed that the provision of an extra relay is more favorable under battery-driven operation than to have a continuous power consumption of 4 W. In addition to this, resistor R 4 will have a chance to cool.

If the power amplifier is only to be used in the FM or CW mode, it would not be necessary for it to be linear, and class C operation can be aligned. This can be achieved easily by deleting relay Rel 2 so that the base is no longer biased. The transistor will then operate in class C with a threshold voltage of 0.7 V due to its base-emitter diode.

2. COMPONENTS

T 1:	BC 413 or similar NPN-AF transistor
T 2:	BC 415 or similar PNP-AF transistor
T 3:	B 25-12 (CTC)
D 1 - D 3:	1 N 4148, 1 N 914 or 1 N 4151
D 4:	1 N 4007
Rel 1 - Rel 3:	RH-12 V or RS-12 V
C 1:	approx. 3.3 pF ceramic disk capacitor (see text)
C 2:	4.7 μF / 16 V tantalum
C 6, C 7:	1 nF disk capacitors
C 9:	47 μF / 16 V electrolytic capacitor
C 10, C 11:	Plastic foil trimmer, green, 7.5 mm dia. 1.8 - 22 pF
C 12, C 13:	Tronser air-spaced trimmer 30 pF

3 feedthrough capacitors of approx. 1 nF
All other capacitors: ceramic disk types

L 1:	2 turns of 1.5 mm dia. silver-plated copper wire, inner diam.: 7 mm,
0	pulled out to the length between the holes in the PC-board
L 2:	3 turns, otherwise as L 1
RFC 1:	5 turns of 0.5 mm dia. enamelled copper wire, inner dia. 4 mm, 5 mm long
RFC 2:	6-hole ferrite core (Philips)
R 4:	47 Ω / 4 W

Case bent from tin plate: 145 mm x 70 mm x 27 mm
2 BNC connectors; 1 heat sink of approx. 120 mm x 100 mm x 25 mm

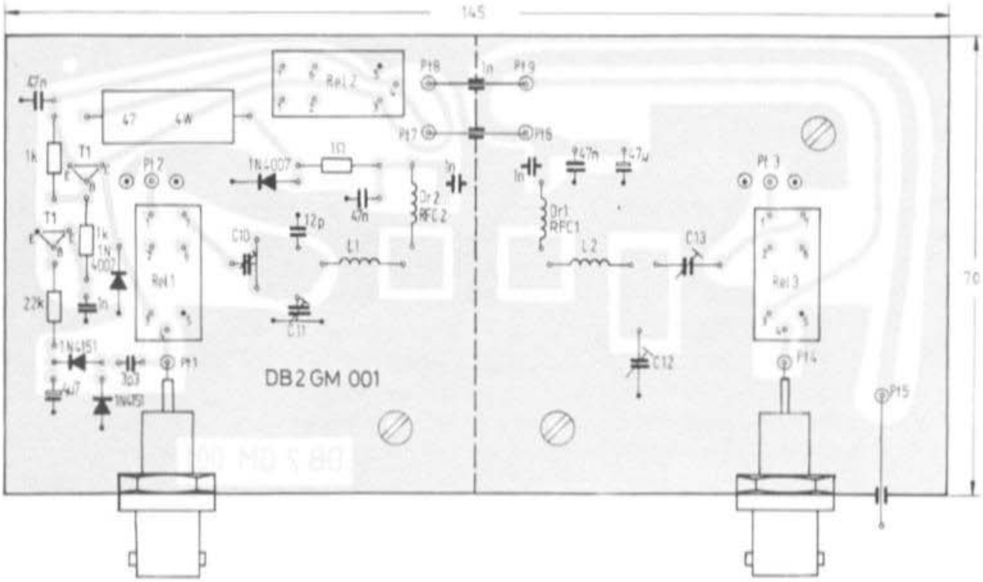

Fig. 2: Component locations of the single-coated PC-board DB 2 GM 001

3. CONSTRUCTION

The PC-board DB 2 GM 001 ensures that the linear amplifier can be constructed easily. The dimensions of this board are 145 mm x 70 mm. The component locations and the conductor lanes of this single-coated board are given in **Figure 2**.

The required holes are made in the board after which it is provided with two approx. 1.5 mm wide slots for the two ceramic disk capacitors C 6 and C 7 so that they fit tightly to the board. Further slots must be made for the two tronser trimmers C 12 and C 13. The holes for inductances L 1 and L 2 are drilled out to 1.5 mm diameter, and to 1.3 mm for the connection pins. A further hole should be drilled at the position of transistor T 3. It is now possible for all components with the exception of T 3 to be mounted onto the board.

The individual parts of the case can now be provided with the required holes according to **Figure 3**. The screening panel is manufactured from thin tin plate and provided with the holes for the two feedthrough capacitors, and a cutout for the coaxial cable interconnecting Pt 2 and Pt 3.

It is now possible for the PC-board to be soldered to the two side panels of the case. This is firstly made at certain points and then soldered all around the board to the ground surface. The base and top covers must have a tight fit to the case. The top cover is removed again and the PC-board, base cover, and heat sink bored at the position of T 3 **(Figure 4)**. This is made with the same drill as was used previously to drill the hole in the PC-board. After this, the base panel and heat sink (but not the board) are drilled out to 4 mm diameter so that the mounting screw of T 3 can be passed through them.

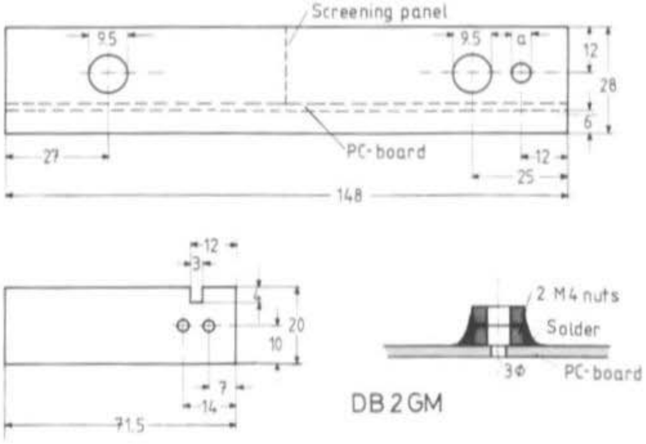

Fig. 3: Metal parts

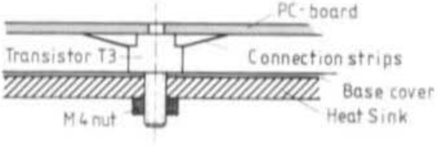

Fig. 4: Installation and cooling of the power transistor

This is followed by placing T 3 onto the lower side of the board and soldered into place. Attention should be paid that it fits well through the hole, without mechanical tension.

This must be tried out in practice. It is advisable for the emitter strips of the transistor to be firstly soldered temporarily, so that it can be shifted slightly if required.

The PC-board is screwed to the heat sink at the three points marked in the component location plan. M 3 threads should be cut into the heat sink for this. Spacing bushings of 6.5 mm in length must be provided between the PC-board and the base cover. These can be made from two M 4 nuts or from actual bushings (see diagram in Figure 3). It is now possible for the connectors and feedthrough capacitors to be screwed into place. The screening panel is now mounted into place as shown in Figure 2. Attention should be paid that the BNC-connectors are well grounded to the case. It is preferable to solder them to the case after mounting.

It is now possible for the wiring of the power amplifier to be completed. A thin coaxial cable, e.g. RG-174, can be used for the interconnection of the path from Pt 2 to Pt 3. Attention should be paid when soldering this cable that the soldering process is carried out very quickly since the dielectric of the cable is liable to melt and cause a short-circuit between inner and outer conductor.

Before final assembly, the base of transistor T 3, both sides of the lower cover, and the heat sink are provided with heat-conductive paste so that a good heat dissipation from T 3 is guaranteed.

The photograph given in **Figure 5** shows the author's prototype whose specifications were measured in the laboratory of VHF COMMUNICATIONS.

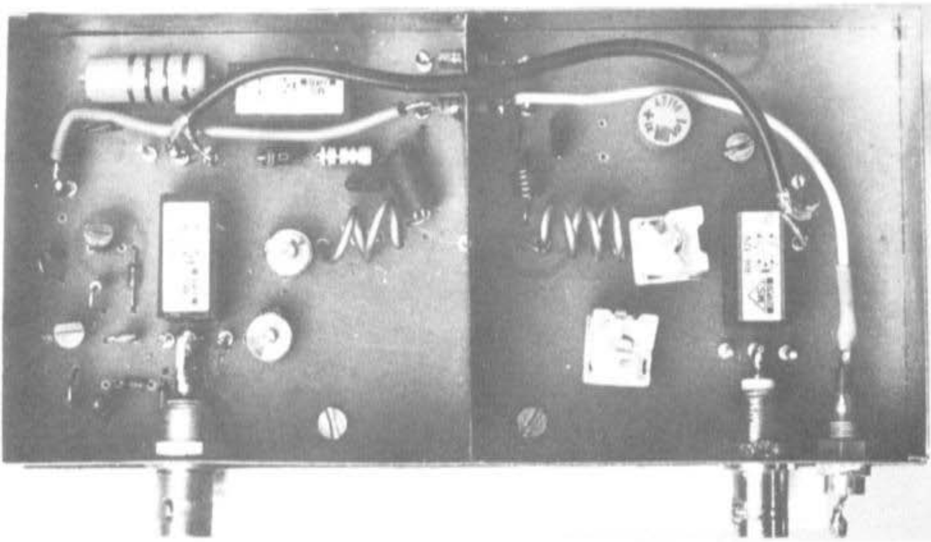

Fig. 5: Photograph of the author's prototype

4. ALIGNMENT

The following equipment is required for alignment of the power amplifier: Ampèremeter (3 A), power supply (13.5 V / 3 A), a 2 m transmitter, VSWR-meter, and a terminating resistor, or well-matched antenna. These are interconnected as shown in **Figure 6**. If available, it is advisable to connect a 2 m bandpass filter (1) between the power amplifier and VSWR-meter.

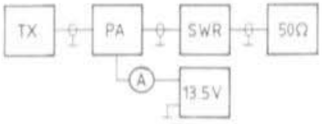

Fig. 6: Measuring set-up for alignment

Only approximately 1 mA current should flow when the operating voltage is connected to the power amplifier. If possible, the power amplifier should firstly be driven with a lower drive power (0.5 W). The RF-VOX should now energize the three relays. This will be seen as an increase of the current drain to the power amplifier, which can be up to approximately 1 A, according to the position of the trimmers. If this is not the case, it is necessary for the RF-VOX to be checked. In this case, the possible cause is coupling capacitor C 1, whose value may be too low so that the VHF voltage is not sufficient to switch T 1. In this case, the value of C 1 should be increased until the RF-VOX switches reliably. In the case of the two author's prototypes, C 1 had a value of 3.3 pF.

It is now possible for the power amplifier to be aligned. This is commenced by adjusting the output trimmers C 12, C 13. After these have been aligned for maximum power, the same alignment is made using the input matching C 10, C 11. A clear maximum should be found for all trimmers. After completing this preliminary alignment, it is possible for the power amplifier to be driven with the full input power. The four trimmers are now aligned alternately several times for maximum on the power meter, since there is a certain amount of interaction. The receive path can be checked by switching off the operating voltage to the linear amplifier. The power meter should now indicate approximately the drive power from the exciter, since this is now switched through via the receive path. If this level is not indicated, the fault will probably be in the coaxial cable. This completes the alignment of the power amplifier. It is now possible for the delay time of the RF-VOX circuit to be adjusted as required by altering the value of C 2. The larger the capacitance value, the larger will also be the delay.

The linear amplifier is now ready for practical operation.

Attention should be paid that the power amplifier is not overdriven using too much drive power. No problems were found when using this amplifier in conjunction with an IC 202. It is favorable, if the drive power can be adjusted, to obtain the most favorable drive level.

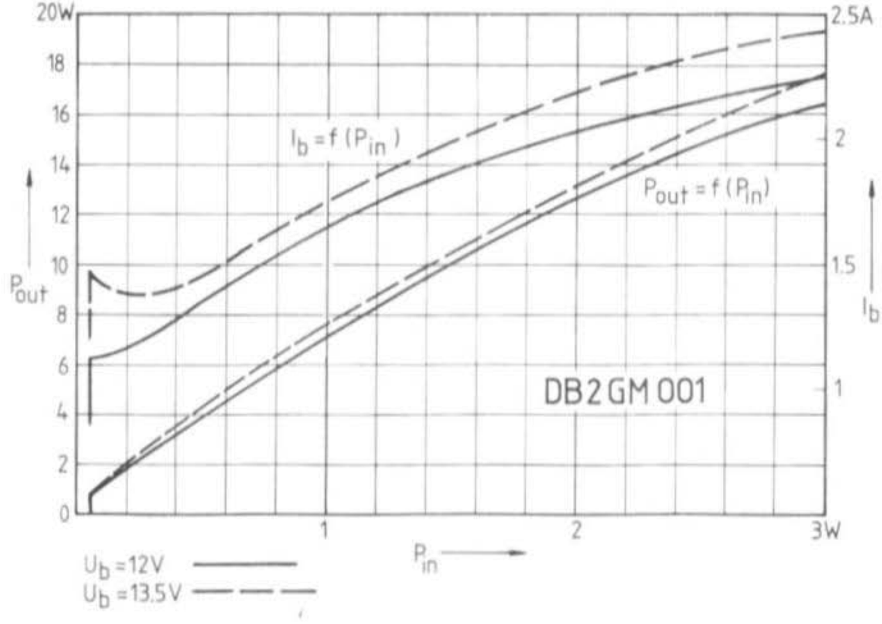

Fig. 7: Output power and current drain as a function of drive power

5. MEASURED VALUES

The values given in **Figure 7** were measured at operating voltages of 12 V and 13.5 V on the author's second prototype. The RF-VOX was switched independent of the operating voltage at a drive power of 60 mW. The 1 dB bandwidth amounted to 2.1 MHz; and the 3 dB bandwidth to 3.8 MHz.

6. MODIFICATIONS

If the power amplifier is only to be used in the FM or CW mode where no linearity is required, it is possible for Rel 2, D 4 and R 4 to be deleted, R 5 is increased to 20 Ω and grounded.

For lower output powers (1 W) it is possible for a CTC transistor type B 12-12 to be used for T 3, which is then able to provide an output power of 10 to 12 W. This transistor can also be well matched using the given networks. However, this transistor is not recommended for SSB, since it possesses a lower drive range. Furthermore, it is not able to handle the higher quiescent current. During experimental operation, the power dropped rapidly after approximately 10 s, and the transistor became too hot.

The next larger transistor in this family, the B 40-12, should also be suitable, but was not tested experimentally.

7. REFERENCES

(1) H. J. Dahms: A Simple Bandpass Filter for the 2 m Band
VHF COMMUNICATIONS 7, Edition 4/1975, pages 244 - 249

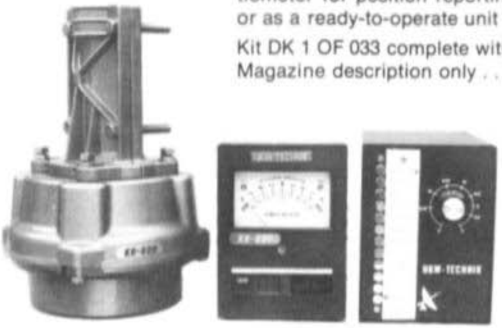

DESIGN OF CRYSTAL OSCILLATOR CIRCUITS
Concluding Part 2

by B. Neubig, DK 1 AG

5. FREQUENCY STABILITY OF CRYSTAL OSCILLATORS

5.1. Long-term Stability

The long-term stability is dependent on the aging characteristics of the external components, especially on the Q of the resonant circuits and the damping effect of the transistors on the Q of the crystal. It is also dependent, of course, on the aging of the crystal, which differs according to the type of crystal and its drive level in the oscillator, and will amount to a typical value of 1 to 3 x 10^{-6}/year during the first year. Since the aging is reduced logarithmically as a factor of time, it is possible to reduce this by previously aging the crystal, if possible at the manufacturer,at a temperature of between 85°C and 125°C.

The drive level of the crystal should be as low as possible for an oscillator that is to have a good long-term stability (1 to 20 µW). Due to their better temperature characteristics, AT-crystals are preferable. When very stable crystal oscillators are required, relatively low-frequency overtone AT-crystals should be used due to their higher Q and higher L_1/C_1 ratio. In this case, crystals operating at their third or fifth overtone of 5 or 10 MHz are used.

5.2. Short-term Stability

The short-term stability of crystal oscillators was only of interest in the past for high-precision oscillators such as secondary frequency and time standards. In recent times, however, this has become more and more important due to the widespread use of synthesizers in HF, and especially in VHF and UHF receivers, as well as for oscillator chains for the microwave frequencies.

The noise-content at the output of a crystal oscillator

$$U(t) = (U_0 + \varepsilon(t)) \sin(\omega_0 t + \varphi(t)) \qquad (20)$$

will have a mean amplitude U_0, which will vary in the order of a noise component ε (t), and an overall phase with the center frequency ω_0, which has a noise component φ (t). Since a phase variation $\frac{d\varphi}{dt}$ as a function of time is correlated with a frequency, this means that:

$$f(t) = f_0 + \frac{1}{2\pi} \cdot \frac{d\varphi}{dt} \qquad (21)$$

The oscillator signal will thus be modulated by the phase noise, and will possess noise sidebands, which will be visible on a sensitive, selective spectrum analyzer.

In the receive mixer, the input signals are mixed with the oscillator signal and its noise sidebands. This means that a noise-signal will be present in the passbands in addition to the selected input signal. This noise-component can be so large that it is able to block the receiver (6), (7).

Methods of measuring phase noise with amateur means were described in (8) and (9). Further details were given in (10). The measuring and evaluation method described by the IEC in (11) has found international recognition.

Details regarding the noise-behaviour of crystals are given in (12) and (13). The following aspects should be considered during the design of short-term, stable crystal oscillators:

In contrast to extremely long-term, stable crystal oscillators, the drive level to the crystal should be relatively high (100 to 500 μW) for this application.

The Q of the crystal will be dampened in any oscillator; in the case of single-stage, self-limiting oscillators, the effective Q will amount to only 15 % to 20 % of the Q of the crystal. Usually, series-resonance oscillators are more favorable than parallel-resonance oscillators.

In the case of bipolar transistors, the noise will be mainly dependent on the base-emitter path. In this case, the noise of PNP-transistors will be lower than a complementary NPN-transistor. MOSFETs have a very high noise level, where 1/f-noise dominates at low frequencies, and thermal noise of the drain-source path at higher frequencies. Junction-FETs possess lower noise levels in comparison to bipolar transistors and MOSFETs. For this reason, a high-current power FET such as type CP 643, or P 8000 (14) is recommended for low-noise crystal oscillators.

If bipolar transistors are to be used, then one should select types with the highest possible DC-gain (h_{FE}), but with very low base resistance ($r_{bb'}$), in other words, typical VHF transistors, which should then be used at the lowest collector current.

However, the short-term stability can be improved more using the following means than by the above methods (even including especially designed crystal):

Single-stage crystal oscillators should be avoided. They possess a very high phase noise, since the transistor is driven into limiting. In this case, the collector base-voltage will be virtually zero during parts of the cycle, and the base-emitter threshold voltage (silicon: 0.6 V) will be exceeded. The transistor impedance that is »seen« by the crystal, will fluctuate in time with the RF-signal, which will generate strong noise sidebands on the oscillator signal.

This means that the limiting function of an amplifier stage connected to a crystal oscillator must be avoided. However, an amplitude control loop is unfavorable, since this could generate additional phase noise.

The best means of improving the short-term stability is to use a strong RF-feedback. A well-proved circuit was introduced in 1972 by M. M. Driscoll (15), which uses a third overtone 5 MHz crystal. Since then, several circuits based on this have been published that possess very good short-term characteristics up to 100 MHz (16) to (19). The basic circuit is given in **Figure 15**. It comprises a two-stage, three-pole oscillator with the resonant circuit L_2/C_2. A cascade circuit is used as amplifier (low internal feedback !), in which the first transistor is provided with feedback in the emitter circuit by the crystal (compensated with L_0). Transistor T_1 operates stably in class A (I_C = 5 mA). Transistor T_2 is isolated from the crystal, and operates at a quiescent current of only 0,8 mA. This means that this stage is firstly limited and will determine the oscillation amplitude. The higher the series-resonance resistance R_1 (for a given Q !) of the crystal, the better will be the short-term stability, since this will increase the negative feedback of T_1.

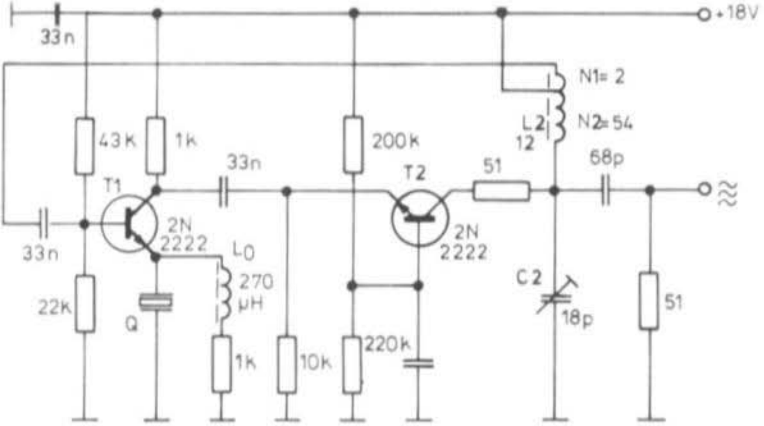

Fig. 15: Crystal oscillator (5 MHz/third overtone) with large short-term stability

The crystal dissipation amounts to 85 µW in this oscillator, the RF output level will be in the order of 4 dBm, and the effective Q will amount to approximately 50 % of the crystal Q. **Figure 16** shows the results of measurements of phase noise, that were given by U.L. Rohde in (21).

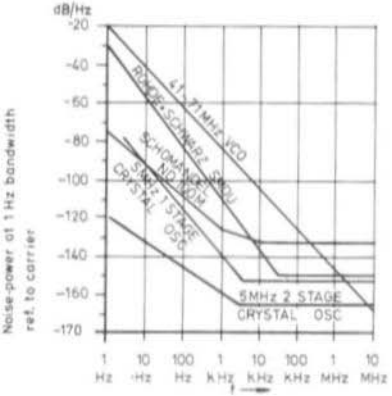

Fig. 16a:
Sideband noise of various signal generators in comparison to the 5 MHz oscillator shown in Fig. 15 according to (21)

The amplitude limiting can also be achieved when biased Schottky diodes are connected in anti-phase at the output of T_2 (due to the low 1/f-noise of these diodes).

A low-noise oscillator which has been designed for use with a 96 MHz crystal according to this principle is given in **Figure 16 b**. Power-FETs type P 8000 are used and adjusted for stable class A (R 1, R 2, R 3). The circuit is provided with a low feedback with the aid of C 1 by selecting a relatively high capacitance value. The value of L_p is calculated according to equation 13, with C_0 = 5 pF. Inductance L 1 should have approximately 0.25 µH, and diode D used for amplitude limiting is a Schottky diode such as HP 2800.

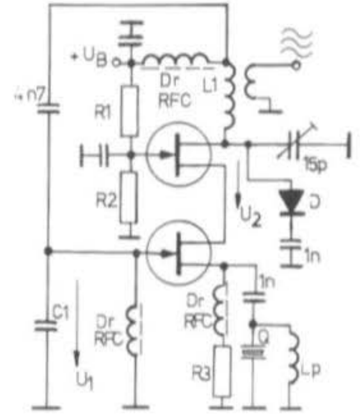

Fig. 16b:
Recommended circuit for a short-term stable VHF-crystal oscillator (96 MHz)

For alignment, the limiting diode should be disconnected and the crystal short-circuited. With the aid of the trimmer, the self-excited frequency is aligned to approximately 96 MHz. After connecting the crystal, compensation coil L_p is aligned to 96 MHz with the aid of a dipper with the oscillator switched off. The oscillator must commence crystal-controlled oscillation immediately on connecting the operating voltage. The RF-amplitude will drop to approximately half the value of the self-limiting oscillator on connecting the diode (U_{limit}).

It is also possible to use the limiting characteristics of a subsequent differential amplifier instead of this (19).

Stable short-term crystal oscillators up to 100 MHz can be constructed according to this cascade principle with the crystal in the emitter circuit. A further reduction of the noise sidebands is obtained by placing a simple crystal filter after the crystal oscillator, as is shown in **Figure 17**. L_2 is wound bifilar on a toroid core and aligned to the center frequency with the aid of C_2. The capacitance C_3 should be selected so that it is equal to the static capacitance C_0 of the crystal. The terminating impedance (22) is:

$$R_T = \frac{1}{2\pi f_0 C_0} \qquad (22)$$

where the bandwidth is dependent on the ratio $C_1 : C_0$:

$$b_{ges} = f_0 \frac{C_1}{2 C_0} \qquad (23)$$

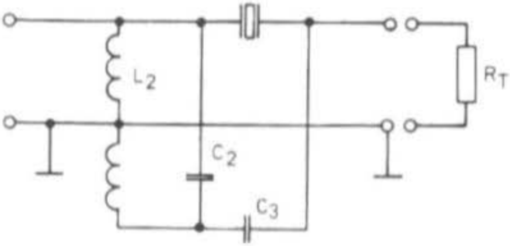

Fig. 17:
Simple crystal filter for reducing phase noise

6.DIODE SWITCHING OF SEVERAL CRYSTALS

Poor practices in this respect are even to be found in professional equipment. A »worst case« -circuit is given in **Figure 18 a**, which possesses all typical faults:

The switching diodes have RF-voltage at both connections, and the blocking voltage is 0 V. This means that the diodes are opened in time with the RF-voltage and the interaction over the junction capacitance of the diodes can then cause:

- A pulling of the frequency due to the adjacent crystal
- Jumping of the oscillator frequency during the pulling process
- Finally a non-selected crystal having a higher Q, or a lower-impedance spurious resonance of any of the crystals can determine the frequency.

Since these effects often only occur at certain temperatures or operating voltages, it is often difficult to localize such faults. In some cases, the crystals are simply short-circuited by the parallel-connected diode, which may not have any effect if the diode impedance is far less than the impedance of the crystal.

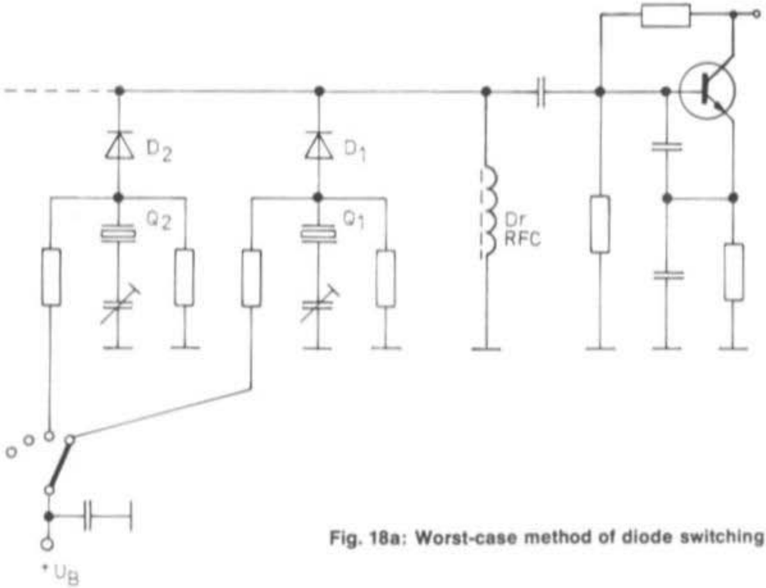

Fig. 18a: Worst-case method of diode switching

A favorable circuit is given in **Figure 18 b**. The diodes are »cold« with respect to RF-voltages at one pole and are biased with half the operating voltage. When diode D_1 is opened, D_2 will be blocked with half the operating voltage ($U_{B/2}$). A further improvement of the isolation is obtained when an additional short-circuit diode is connected in parallel to the crystal (dashed). The disadvantage is, of course, the large number of components. Suitable, low-capacitance, fast switching diodes are, for instance, types BAY 67, 1 N 4148, or 1 N 4151.

The most reliable method of switching crystals is to use separate crystal oscillators !

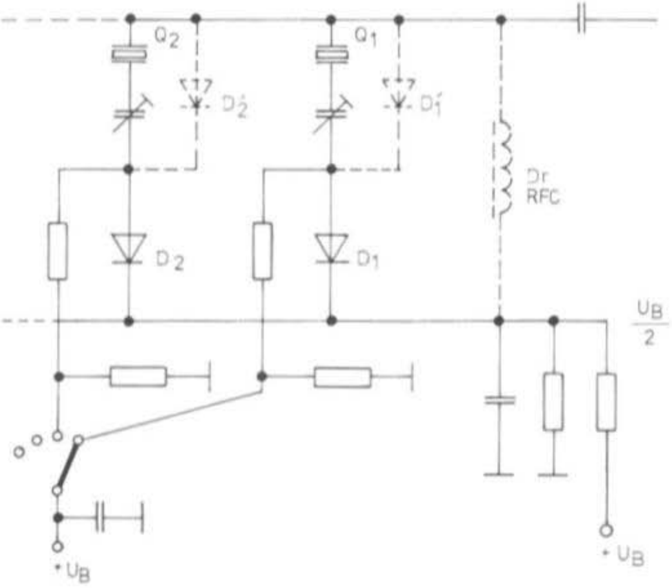

Fig. 18b: Improved diode switching circuit for crystal oscillators

7. MODERN CRYSTAL OSCILLATORS USING INTEGRATED CIRCUITS

7.1. TTL and CMOS Gate Circuits

These oscillators are usually used where they are least suitable: in frequency and period counters, clocks and other measuring equipment.

The well-known basic circuits for parallel and series-resonance oscillators using TTL and CMOS gates are given in **Figure 19** (23), (24), (25). The feedback resistors are necessary for linearizing the gates; if these were deleted, the oscillator would have difficulties in commencing oscillation, if at all.

TTL and CMOS gates are digital components and are optimized to switch cleanly between two limit values. It is true that they can be linearized using feedback, however, this linear behaviour is not reproducible and most certainly does not represent an optimum.

Let us consider, for instance, the amplitude and phase response of two series-connected, linearized Schottky-NAND gates SN 74 S 00 as a function of frequency **(Figure 20)**. The theoretical phase shift of 0° will only be achieved in the vicinity of zero Hz (!), and in excess of this will achieve any phase angle between 0° and 160°, and will virtually represent and ideal inverter (26) at the upper frequency limit.

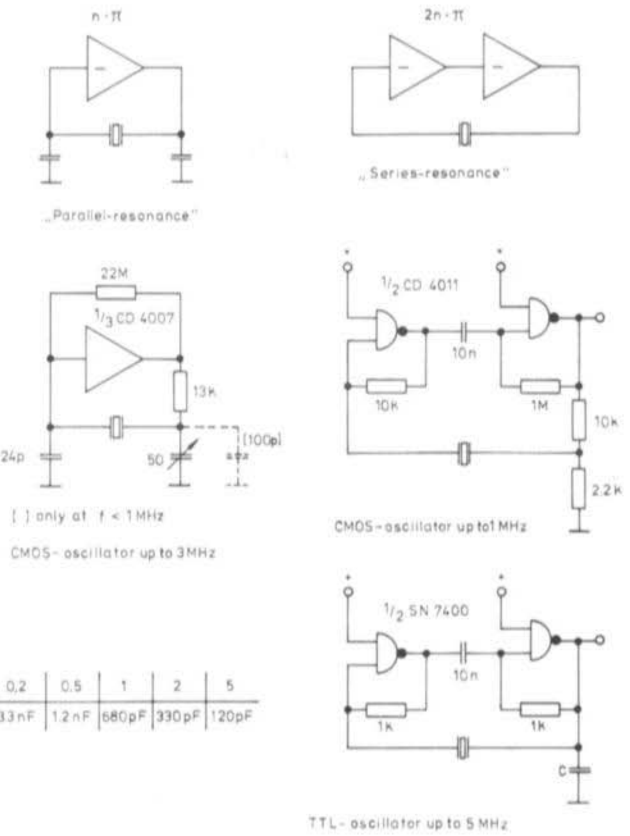

f (MHz)	0.2	0.5	1	2	5
C	3.3 nF	1.2 nF	680pF	330pF	120pF

Fig. 19: Oscillators with logic gates

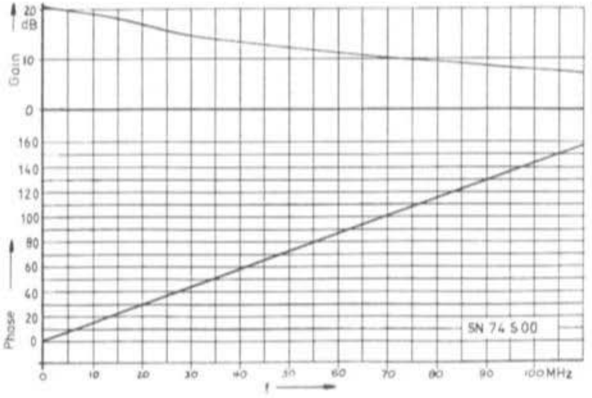

Fig. 20: Amplitude and phase response of a linearized SN 74 S 00

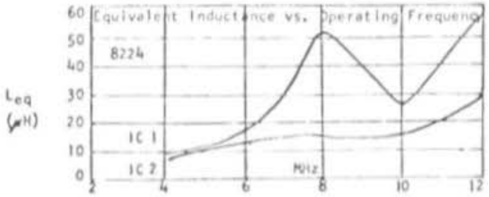

8224 IC1

fs (MHz)	Δf (Hz)	Δf (PPM)	L_{eq} (µh)	*C_L' To Cancel Leq(pf)
2	OPERATES ON 3RD. OVERTONE			
4	-156	-39	6.8	233
8	-2958	-370	13.8	29
10	-6776	-678	18.1	14
12	-12200	-1017	28.2	6
16	-59318	-3637	—	—
18	NOT CRYSTAL CONTROLLED			

8224 IC2

fs (MHz)	Δf (Hz)	Δf (PPM)	L_{eq} (µh)	C_L' To Cancel Leq(pf)
2	OPERATES ON 3RD. OVERTONE			
4	-214	-53	9.4	170
8	-7455	-932	50.8	8
10	-8506	-851	25.2	1
12	-16503	-1376	54.8	3
16	-171947	-10541	—	—
18	NOT CRYSTAL CONTROLLED			

Fig. 21:
Equivalent gate inductance L_{eq} and frequency error Δf with various samples of clock IC type 8224 (for microprocessor 8080)

Holmbeck (27) examined several samples of the clock IC 8224 of the microprocessor system 8080. The measured values of two samples are given in **Figure 21**. Generally speaking, the inverters have an inductive behaviour, in other words, react in a similar manner as when an inductance L_{eq} were connected in series; a strong fluctuation was found between the individual samples. The frequency response of this equivalent inductance is shown in the upper diagram for two samples of the same integrated circuit. The effects of this on a crystal oscillator can be seen in the two tables:

- At low frequencies (2 MHz) both oscillators will operate stably at the third overtone instead of the fundamental mode;
- The frequency shift with respect to series resonance will become greater and greater on increasing frequency and will attain thousands of ppm, with fluctuations of also thousands of ppm due to the spread from IC to IC.
- Sometimes, a capacitor is connected in series in order to compensate for the effect of L_{eq}. The values of such a capacitor are given in the last column. If, for instance, 14 pF are required by one IC at 10 MHz, it may be that only 1 pF (!) will be required with another IC. At frequencies in excess of 12 MHz, a capacitor will no longer be able to help.
- Finally, at 18 MHz, both crystal oscillators are no longer crystal-controlled. The cause of this is the second resonance position formed by L_{eq} and C_0 of the crystal (see section 4). If this is far above the crystal frequency, this excitation can only be avoided when a small capacitor (lowpass) is connected in parallel to the feedback resistor of the gate.

- Since the loop gain is very high, it is also possible for spurious parasitic resonances to be present together with the parasitic external capacitances.
- In the case of LF-crystals, it is often easier to excite higher-frequency modes than the fundamental.
- Finally, it is also possible for the drive level of the crystal to become so high that the crystal will operate in an unstable manner.

This information is also valid for circuits equipped with integrated dividers such as CD 4060, MC 14521, MC 14410, E 1115, as well as the clock IC MC 6875 (for μP 6800), etc.

7.2. Survey On Integrated Circuits as Crystal Oscillators

7.2.1. ICs with Digital Outputs

The TTL-VCO circuits such as 74324, 74325, 74326, 74327, as well as their Schottky and low-power Schottky derivations fall under the same category as the gate oscillators. They operate more or less by chance when a crystal is provided instead of the frequency-determining capacitor.

Measurements made by the author gave the following results:

Figures 22 a and 22 b show the frequency error (difference between the oscillator frequency and the series-resonance frequency of the crystal) of several samples of types SN 74 LS 324 and SN 74 LS 325. The first ones oscillated wildly in excess of 3 or 4 MHz, and oscillated several 1000 ppm below the crystal frequency in excess of 2 MHz. IC type SN 74 LS 325 stopped oscillation, according to the sample in question, at 5, 6 or 8 MHz, and showed similar frequency errors, but at a higher frequency. Type SN 74 LS 326 only operated in a crystal-controlled manner at 1 MHz, only between 1 and 2 MHz, or only at 2 to 2.5 MHz.

During these measurements, the high »range« input (pin 2 of 324) was directly connected to + 5 V, and »frequency control« inputs (pin 13 of 324, pins 6 and 11 of 325, pins 9 and 10 of 326) were grounded. According to subsequent information from the manufacturer, better results should be possible if only + 4 V is present at these inputs instead of + 5 V and a bias voltage of + 1 V instead of 0 V.

Two integrated circuits which are especially designed as crystal oscillators are now to be introduced:

Plessey SP 705 B: This is a Butler oscillator (1 to 10 MHz) with anti-phase outputs of f/2 and f/4. According to the data sheet, the frequency error at 10 MHz is typically -50×10^{-6}. However, the spread of this value is not given.

The results measured by the author are given in **Figure 23**: None of the oscillators operated below 1 MHz. From 1 MHz the well-known inductive behaviour (reduction of frequency) was noticed until oscillation ceased, according to the sample, in excess of 2.5 MHz, 3 MHz, or 4 MHz. In excess of 8 MHz, oscillation commenced again with a positive frequency error, and ceased again in excess of 10 MHz or 12 MHz. Furthermore, the built-in frequency divider did not work reliably. In the case of integrated circuits No. 2 and 3, the full, undivided frequency appeared at the output in the lower frequency range !

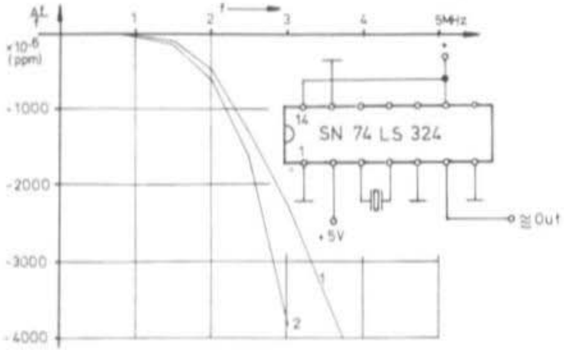

Fig. 22a:
Frequency error
of an oscillator
equipped with SN 74 LS 324 (TI)

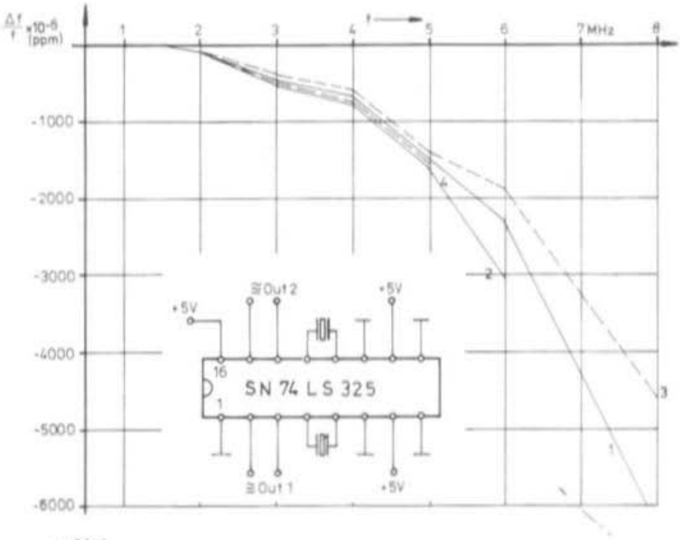

Fig. 22b:
Frequency error
with SN 74 LS 325 (TI)

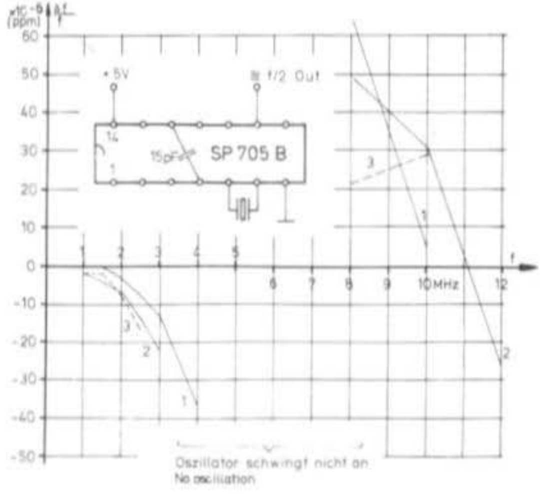

Fig. 23:
Frequency error
with SP 705 B (Plessey)

Motorola MC 12060/12061 : IC type 12060 is designed for the frequency range from 0.1 MHz to 2 MHz, and type MC 12061 from 2 to 20 MHz. Both types are in the form of Butler circuits with built-in AGC. They supply two anti-phase sinewave, as well as TTL and ECL signals.

Measuring results:

MC 12060: All samples oscillated reliably up to in excess of 2 MHz, but provided considerable frequency errors of between -550×10^{-6} and -1100×10^{-6} at 2 MHz **(Figure 24)**. At 1.5 MHz, these frequency errors are still between -110×10^{-6} and -200×10^{-6}. This large spread limits the applications of this IC to a large degree if a reproducible oscillator frequency is required.

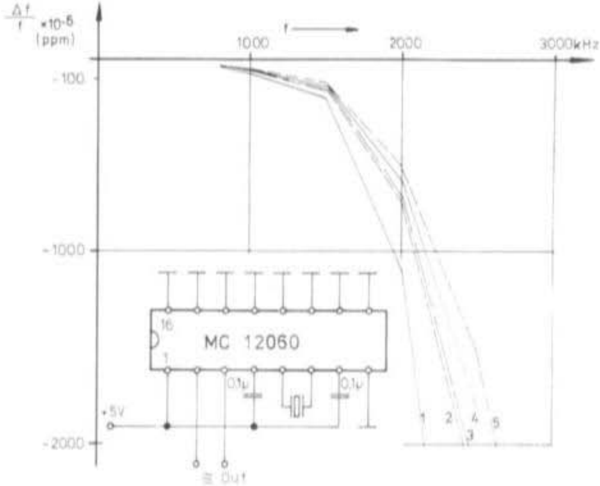

Fig. 24:
Frequency error
with MC 12060
(Motorola)

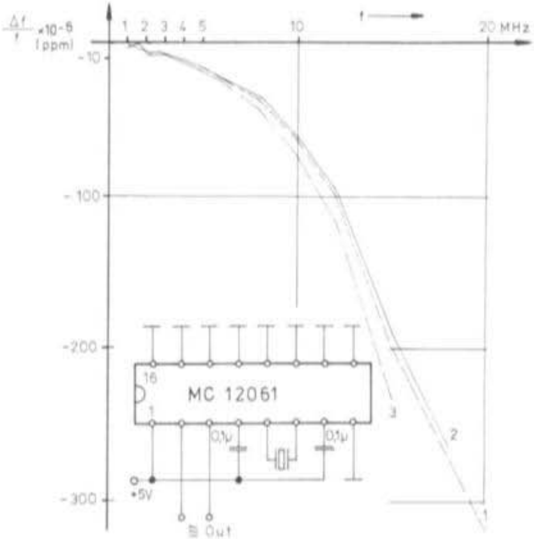

Fig. 25:
Frequency error
with MC 12061
(Motorola)

MC 12061: Up to 15 MHz, all oscillators operate with frequency errors of up to -235×10^{-6} **(Figure 25)**, which is very good in comparison to other oscillator ICs. The frequency error of the individual oscillators in comparison with another is approximately 45×10^{-6} (at 15 MHz) which can satisfy moderate demands. IC No. 2 stopped oscillation in excess of 18 MHz, and IC No. 1 in excess of 20 MHz. All samples operated excellently at 1 MHz (frequency error only -1 to -3×10^{-6}).

7.2.2. Analog ICs

National Semiconductors LM 175/275/375

According to the data sheet, this type is a differential amplifier that can be used in series and parallel-resonance in a frequency range of 800 kHz to 20 MHz. The IC requires a large number of external components. As is also given in the data sheet, it is not possible for an aperiodic oscillator to be constructed ! It is always necessary to provide a resonant circuit. On the other hand, no resonant circuit should be provided in the buffer stage (e.g. for harmonic suppression), since the stage could otherwise break into oscillation. This was also confirmed by Harrison in (4).

Only the series-resonance circuit was tested according to the data sheet. The crystal was fed back from the output to the non-inverting input of the differential amplifier, and an additional capacitor was inserted to ground. The inverting input is provided with a neutralizing voltage via a capacitive divider in order to ensure that the oscillator will not oscillate wildly together with the static capacitance of the crystal.

The oscillator can be pulled by several hundred ppm with the aid of the output circuit. If the circuit is aligned for maximum output voltage, a frequency error of between -760 ppm and $+210$ ppm with respect to the crystal frequency will be obtained when using crystals of between 800 kHz and 20 MHz. These frequency errors can always be corrected by detuning the output circuit. The required detuning was usually in the vicinity of the upper limit of stable commencement of oscillation, but this could possibly be improved by altering the compensation capacitors.

The frequency shift on varying the operating voltage between 5 V and 24 V amounted up to ± 5 ppm. The DTL/TTL logic divider did not operate satisfactorily with any of the ten samples tested.

Plessey 680/1680

This is a series-resonance oscillator (emitter crystal) with AGC for the frequency range of 100 kHz to 100 MHz (an older data sheet listed: 150 MHz). The drive level of the crystal is very low at 0.5 µW. The feedback link is broken to allow insertion of a resonant circuit in the case of overtone oscillators. A disadvantage of the series-resonance oscillator: it is true, that the crystal is grounded at one side, but if the frequency is to be pulled slightly, it will be necessary to isolate the crystal, or pulling trimmer from ground. Both are inadvisable, and can be avoided when using a parallel-resonance oscillator. In practice, it was also found that approximately 20 % of the integrated circuits were not suitable since they were very temperature dependent. In addition to this, the data sheets list differing pin connections (!!).

The measuring results are shown in **Figure 26**. The samples operated reliably up to 18 MHz. The frequency error with respect to the series-resonance frequency increased continuously and attained values between -540×10^{-6} and -630×10^{-6} at 18 MHz. At higher frequencies, especially in conjunction with overtone crystals, a resonant circuit should be inserted between pin 2 and pin 3 so that an impedance matching of the stages can be made using a suitable coil tap.

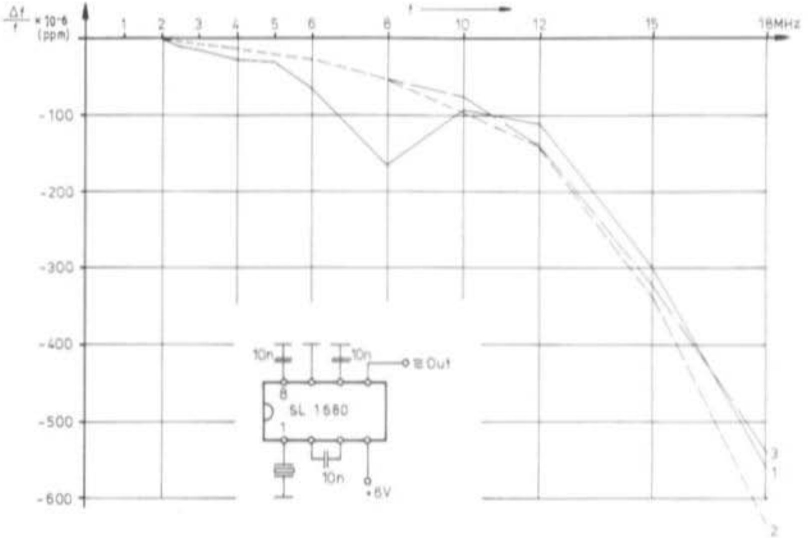

Fig. 26: Frequency error with SL 1680 (Plessey)

KVG IXO-01

Recently, KVG offers a special crystal oscillator IC of their own manufacture **(Figure 27)**. This is a parallel-resonance oscillator using a Darlington-Colpitts oscillator similar to that discussed in section 2. The IC also has an extensive voltage-stabilizer circuit, which is also externally accessible, as well as a multi-stage buffer amplifier. This IC is accommodated in an eight-pin CERDIP-case. Two alternative outputs are available: an open collector to which a resonant circuit can be connected (an output voltage of more than 3 V (peak-to-peak) across 500 Ω can be adjusted by selection of the divider ratio), or a low-impedance emitter output. The oscillator operates in the whole fundamental range up to 30 MHz (even without external circuit).

The external circuitry of the oscillator can be made in a similar manner as given in Figure 5 by placing a capacitance of approximately 40 pF in series with the crystal. In the case of overtone crystals, C_2 is replaced by a resonant circuit. Further details can be taken from the original data sheet.

Suitable crystals for the whole frequency range are available (specification XA-050 at KVG) especially for this oscillator. This means that all problems in specifying the crystal are avoided.

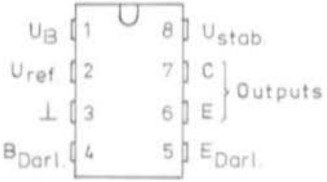

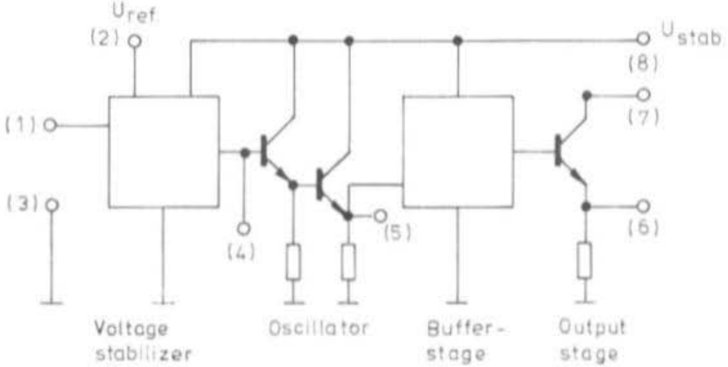

Fig. 27: Crystal oscillator IC IXO-01 (KVG)

LITERATURE to Part 2

(6) B. Priestley: Oscillator noise and its effect on receiver performance
Radio Communications, 7/1970, page 456

(7) M. Martin, DJ 7 VY: Empfängereingangsteil mit großem Dynamikbereich und sehr geringen Intermodulationsverzerrungen
CQ-DL, 6/1975, page 326

(8) M. Martin, DJ 7 VY: Rauscharmer Oszillator für ein Empfängereingangsteil mit großen Dynamikbereich
CQ-DL, 12/1976, page 418

(9) U. L. Rohde, DJ 2 LR: Evaluating noise sideband performance in oscillators
HAM RADIO 10/1978, page 51

(10) Proceedings on the IEEE-NASA Symposium on Short-Term Frequency Stability
Goddard Space Flight Center, Greenbelt, Maryland (1964)
Document NASA SP-80 (1964)

(11) Paper IEC Working Group 49 (Secr.) 83

(12) A. E. Wainwright, F. L. Walls, W. D. McCaa: Direct Measurements of the Inherent Frequency Stability of Quartz Crystal Resonators
Proceedings of the 28th Annual Symposium on Frequency Control (ASFC), Atlantic City, (1974), page 177

(13) T. Musha: 1/f-resonant Frequency Fluctuation of a Quartz Crystal
Proceedings of the 29th Annual Symposium on Frequency Control (ASFC), Atlantic City, (1975), page 308

(14) M. Martin, DJ 7 VY: A Modern Receive Converter for 2 m Receivers Having a Large Dynamic Range and Low Intermodulation Distortion
VHF COMMUNICATIONS 10, Edition 4/1978, pages 218-229

(15) M. M. Driscoll: Two-stage Self-limiting Series Mode Type Quartz Crystal Oscillator Exhibiting Improved Short-term Frequency Stability
Proc. 26th ASFC (1972), page 43

(16) M. M. Driscoll: Q-multiplied Quartz Crystal Resonator for Improved HF and VHF Source Stabilization
Proc. 27th ASFC (1973), page 157

(17) D. J. Healey III: Low-Noise UHF Frequency Source
Proc. 27th ASFC (1973), page 170

(18) D. J. Healey III: L (t) Measurements on UHF Sources Comprising VHF Crystal Controlled Oscillator Followed by a Frequency Multiplier
Proc. 28th ASFC (1974), page 190

(19) U. L. Rohde: Mathematical Analysis and Design of an Ultra Stable Low Noise 100 MHz Crystal Oscillator with Differential Limiter and its Possibilities in Frequency Standards
Proc. 32nd ASFC (1978), page 409

(20) D. Firth: Quartz Crystal Oscillator Circuits Design Handbook
Magnavox Co., (1965)

(21) U. L. Rohde, DJ 2 LR: Effects of Noise in Receiving Systems
HAM RADIO 11/1977, page 34

(22) W. Herzog: Siebschaltungen mit Schwingkristallen
Wiesbaden 1949

(23) TTL-Kochbuch; hrsg. Texas Instruments, Freising

(24) S. S. Eaton: Timekeeping Advances through COS/MOS Technology
RCA Application Note ICAN-6086

(25) S. S. Eaton: Micropower Crystal-Controlled Oscillator Design Using RCA COS/MOS Inverters
RCA Appl. Note ICAN-6539

(26) T. Luxmore, D. E. Newell: The MXO-monolithic Crystal Oscillator
Proc. 31st ASFC (1977), page 396

(27) J. D. Holmbeck: Frequency Tolerance Limitations with Logic Gate Clock Oscillators
Proc. 31st ASFC (1977), page 390

ELECTRONIC CONTROL OF ANTENNA ROTATORS
Part 2: Digital Programming with BCD-Inputs

by J. Kestler, DK 1 OF

5. INTRODUCTION

A purely digital antenna control as is used, for instance, in satellite ground stations, can hardly be realized with amateur means. The tracking accuracy required for such applications will most certainly not be required for amateur antenna systems, which means that inexpensive rotating systems that are available on the market can be used. These all operate with analog indication of the actual antenna position. The linearity of the potentiometer used for this, and the precision of the required gearing determine the accuracy of the system.

W. Kurz, DK 2 RY, is developing a universal microcomputer system for amateur radio applications, which can also be used for antenna control (1). Such a computer, of course, provides data in digital form, whereas the antenna rotator represents an analog component. The following article is to describe a rotator control unit that can be controlled digitally via BCD-inputs and internally using numerical switches. It is also possible for the rotator to be controlled manually using a simple left/right switch. It was designed especially for operation with the rotator series KR 400/500/600 (UKW-TECHNIK), however, it can possibly be used with slight modifications for other rotator types.

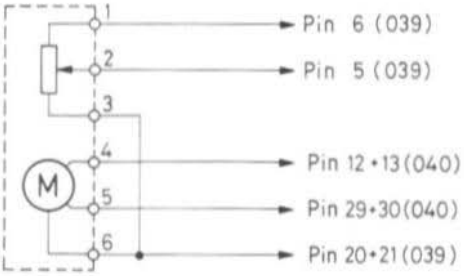

Fig. 14:
Connection diagram for rotators KR 400/500/600

6. CIRCUIT AND CONSTRUCTION OF THE CONTROL UNIT FOR USE IN CONJUNCTION WITH AN AZIMUTH ROTATOR

Various possibilities exist for the selection of the data format for the input signal: Since the computer operates in a binary manner, a binary programming of the control unit, as well as hardware (components) and software (program) will be most favorable. On the other hand, the manual programming would be very difficult due to the 1-2-4-8-16 ... coding, and would require quite a bit of re-thinking during operation. If, on the other hand, a BCD-format is selected, the required angular value can easily be selected by numerical switches. Since the microcomputer is also to be equipped with a display, it will require a converter binary → BCD in any case, and this can also be used for our application. For this reason, the author has selected the second method and BCD code is to be used.

The next question is the resolution of the system, in other words which is the lowest angular step that is to be made. In the case of shortwave beams and simple VHF/UHF antennas, a resolution of 10° would most certainly be satisfactory. However, it seems advisable for the reproducibility of approximately ± 2° of the mechanical system to be utilized to the full also electrically and to provide 1°-steps.

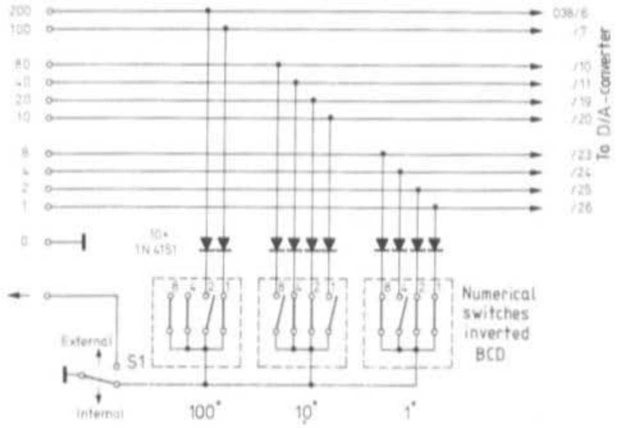

Fig. 6: Data input

6.1. Data Input

A number of input connections are given on the left-hand side of Figure 6; these are connected to the output of the computer. The numerals on the connections represent the valency of the input in question. If, for instance, input 80 is at »H« level (+ 5 V) and all others are at »L« level (ground) this will mean that the antenna direction is programmed to 80° (compass direction).

Switch S 1 allows the control to be switched from external to internal control. If it is in its lower position (as shown), the output drivers in the computer will be blocked (»tristate«) via connection »←«, and the numerical switches in the control unit will determine the programming. Numerical switches with inverted BCD code are required for this application, which means that the contact in question is open at the given valency (1, 2, 4 or 8). Switches of type Contraves M 140 L with extended connection board provide sufficient room for the diodes required for decoupling. The following table shows the connection diagram for this type of switch:

Valency	Connection No.
1	2
2	1
4	4
8	7
ground	3

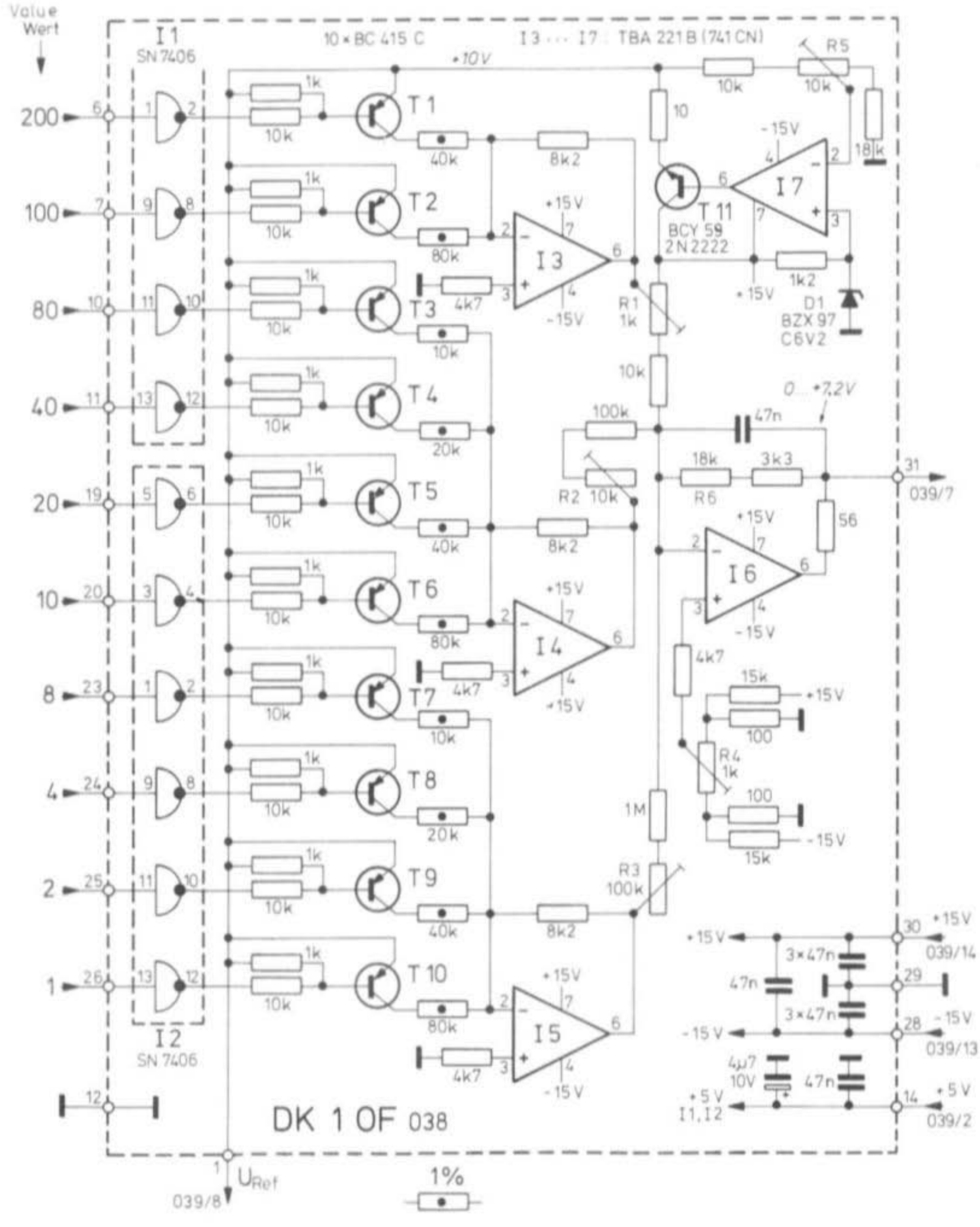

Fig. 7: Digital/analog converter

6.2. The Digital/Analog Converter

The task of the module to be described in this section is to convert the digital information from the computer or numerical switches into an analog voltage. Of course, complete modules are available on the market for this application, however, since none of the offered types has been really successful on the market, the prices are relatively high due to the low quantities. If one is willing to invest a certain portion of time during alignment, it is possible for a sufficiently accurate digital/analog converter to be constructed for this application using cheap standard components.

6.2.1. Circuit

The circuit diagram of the D/A-converter is given in **Figure 7**. Each data input is fed via an inverter with open-collector output (I 1, I 2) to a switching transistor (T 1 to T 10). These transistors have the task of generating defined currents via low-tolerance (1 %) resistors from the stabilized reference voltage (+ 10 V). These are then added in the decade-adding amplifiers I 3, I 4 and I 5 and fed to the output stage I 6; R 4 is provided for the zero-alignment. The output signal is available at connection 31 (note: the numerals given in the circuit diagram for the input and output connections represent the pin numbers on the 31-pin connector to be used in conjunction with the board).

The reference voltage is generated with the aid of D 1 and I 7; due to the relatively high current flow via pin 1, an emitter follower (T 11) has been provided. It is possible for an exact alignment of the generated voltage to be adjusted with the aid of R 5. The following voltages are required: ± 15 V (for I 3 to I 7) and + 5 V (for I 1 and I 2). In order to avoid ground loops, separate ground leads were selected: pin 12 for the digital, and pin 29 for the analog portion.

6.2.2. Construction

A single-coated PC-board with the designation DK 1 OF 038 was developed for accommodation of the D/A-converter. This is in the form of a shortened Europa-board with the dimensions 120 mm x 100 mm and can be used in conjunction with a standard 31-pin connector. The component locations and conductor lanes are given in **Figure 8**. Due to their better long-term stability, it is advisable for trimmer resistors to be used having a ceramic substrate (Cermet). The alignment of this module is to be dealt with during the description of the other circuits.

As can be seen in the component location plan, the PC-board has the facility for two further (non-equipped) input channels which means that it can be used for three complete decades. This means that the resolution can be improved, if required (for instance for large parabolic antennas) down to approximately 0.3°, but this will require a correspondingly exact mechanical system. On the other hand, the numerical value of the input signal will no longer coincide with the angular value (360° ≙ »999«).

6.2.3. Special Components

T 1 - T 10:	BC 415 C or similar silicon PNP transistors
T 11:	BCY 59, 2 N 2222 or similar silicon NPN transistors

I 1, I 2: SN 7406 N (FLH 481) or SN 74 LS 06 N
I 3 - I 7: TBA 221 B or 741 CN

D 1: BZX 97/C 6 V 2 or other 6.2 V zener diode

Trimmer potentiometer: for horizontal mounting, spacing 10/5 mm

Designated resistors: metal-layer, tolerance ± 1 %, spacing 12.5 mm
(2 x 10 kΩ, 2 x 20 kΩ, 3 x 40 kΩ, 3 x 80 kΩ)
All other resistors: carbon, spacing 10 or 12.5 mm

Capacitors 47 nF: Ceramic disk types (≧ 30 V)
Capacitor 4.7 µF: Tantalum drop type, 10 V

Connector strip: e.g. Siemens C 42334-A 55-A 08

Socket: e.g. Siemens C 42334-A 56-A 2 or C 71334-A 10-A 2

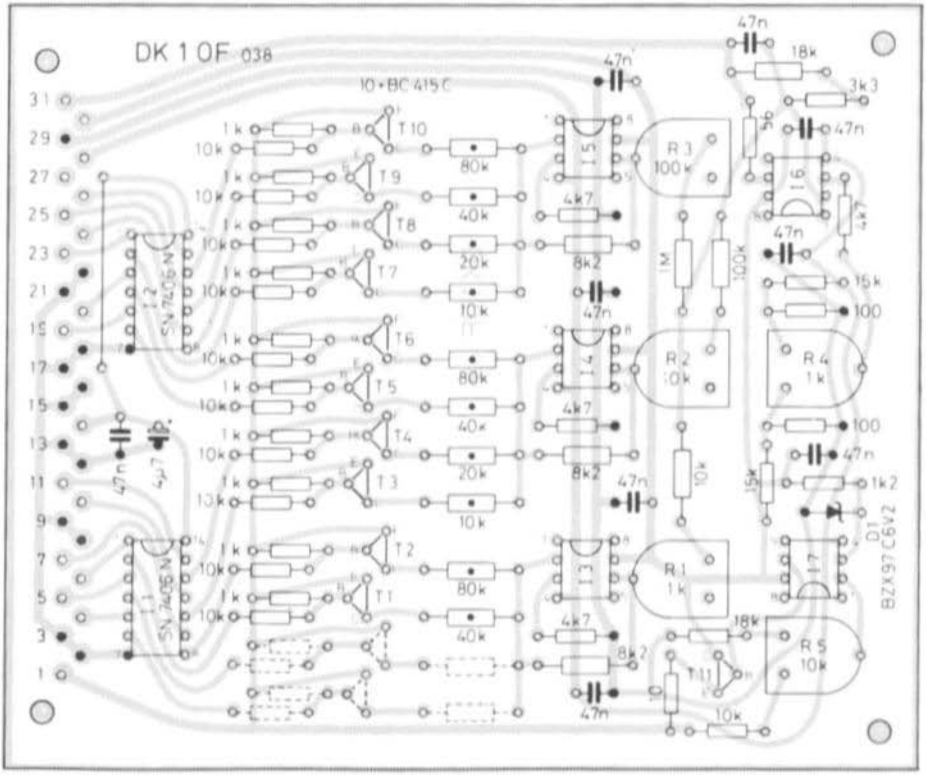

Fig. 8: PC-board for the D/A converter DK 1 OF 038

6.3. Control Amplifier, Protective Circuits and Power Supply

6.3.1. Circuit Details

Figure 9 shows the circuit diagram of the other stages of the controller. The reference voltage of ± 10 V is fed from the previously mentioned module via pin 8; it is then fed via an adjustable dropper resistor of 150 Ω (R 1) to the position potentiometer (500 Ω) in the rotator. It should be noted, that both the D/A converter and the indicator circuit are fed from the same reference voltage, which means that the absolute value has practically no effect on the accuracy of the system. The voltage tapped off on the potentiometer is proportional to the angle. This voltage is fed via pin 5 and fed via a filter link to stage I 2 as actual value; the nominal value (= output voltage of the D/A converter) is fed in via connection 7. I 2 forms the differential voltage between both values and controls the double comparator I 3 / I 4, which actuates the clockwise or anti-clockwise operation of the motor via the switching transistors T 1 and T 2 and relays Rel 1 and Rel 2. The same circuit was also used in part 1 of this article (2), which means that it need not be discussed in detail here.

The integrated circuit I 1 is also connected as a comparator and compares the nominal and maximum actual value. If an angle of more than 360° is programmed in error (even computers make errors sometimes), the nominal value will be greater than the maximum possible actual value. In this case, the supply voltage for the relays will be disconnected via T 3 and T 4 so that the motor rotation is stopped. If this protective circuit was not provided, the rotator could run to its stop and it is possible that the motor winding could be damaged if this was not noticed in time.

It is possible with the aid of switch S 2 to switch off the automatic control, and to manually control the rotator with the aid of switch S 3. Diodes LED 1 and LED 2 will indicated clockwise or anti-clockwise rotation of the rotator.

Now a few words regarding the power supply:

All required voltages are taken from the two series-connected 12 V secondary windings of the power transformer Tr. Since the previously mentioned rotators require an operating voltage of 24 V ~ for the motor, it is possible for the total secondary voltage to be used for this directly. For rotators requiring a higher supply voltage for the motor, it is possible for the higher voltage to be obtained with the aid of a third winding, or for a separate transformer to be used.

Diodes D 1 and D 2 generate a positive and a negative DC-voltage of approximately 32 V each which are then stabilized with the aid of diodes D 3 / D 4 and the Darlington transistors T 5/ T 6 to ± 15 V, and used for the supply of the analog circuits. The relays are provided with the unstabilized positive voltage. D 5 is connected to the center tap of the transformer and provides a positive voltage of approximately 16 V, which is stabilized to 5 V with the aid of D 6 and T 7 and used for supplying the input stages of the D/A-converter.

The whole operating current of the control unit flows via three parallel-connected 1Ω resistors (pins 26/27) where it generates a proportional voltage drop. If this exceeds a threshold that is adjustable with the aid of R 3, relay Rel 3 will be actuated via T 9 - T 8, and LED 3 will light. Rel 3 possesses a self-holding contact and remains energized, and the supply of the other two relays is disconnected so that the motor receives no voltage. In this manner, it is protected against excessive current flow. This overload circuit can be reset by temporarily switching the control unit off and on, using switch S 4.

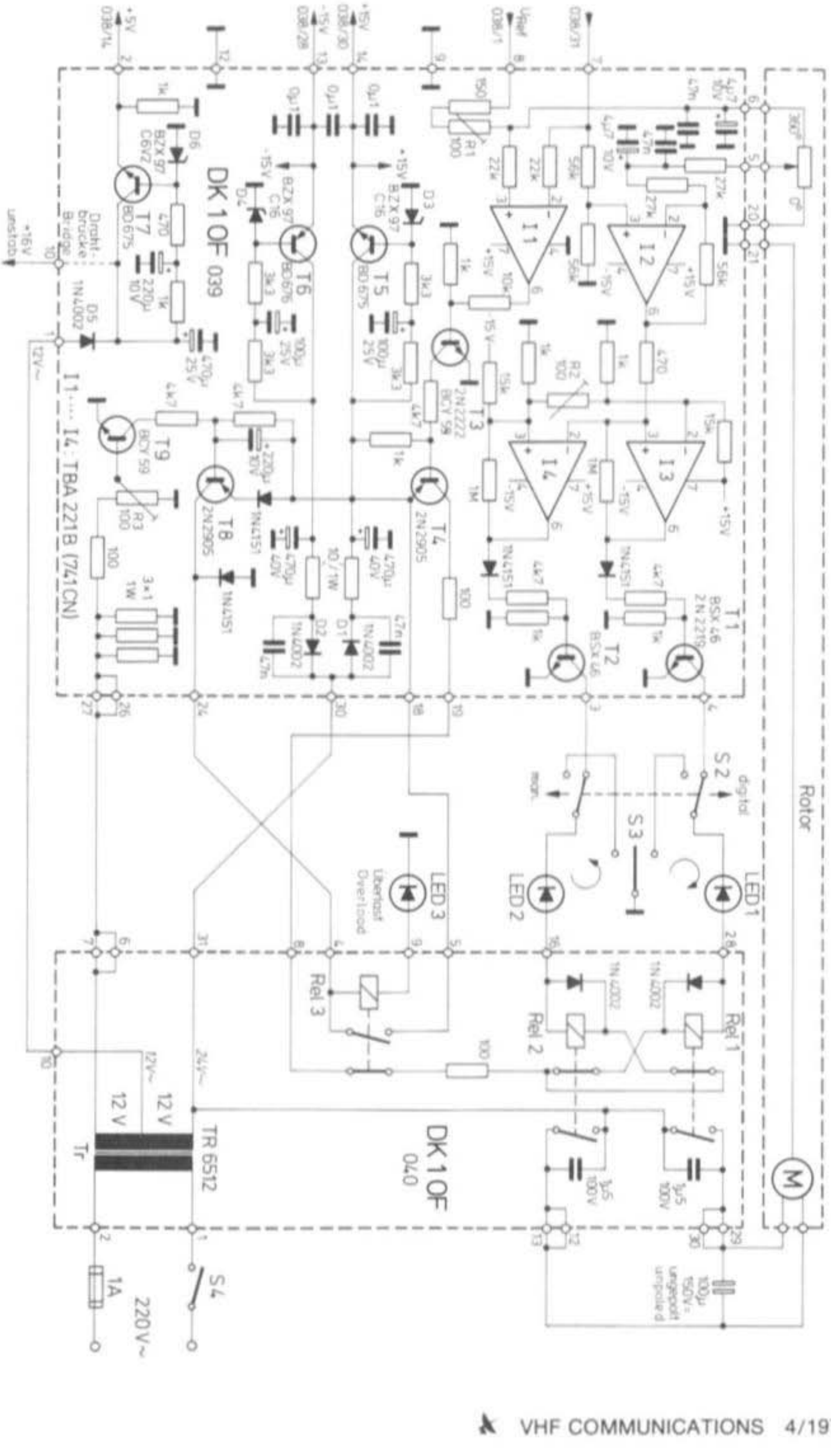

Fig. 9: Control amplifier, protective circuits and power supply

6.3.2. Construction

The circuit given in **Figure 9** can be accommodated on two 120 mm x 100 mm large PC-boards designated DK 1 OF 039 and 040. These are also single-coated and can also be provided with 31-pin connectors.

The component location plans are given in **Figure 10** and **Figure 11**. Transistors T 5, T 6 and T 7 are mounted on a common heat sink of approx. 95 mm x 25 mm with large cooling fins (do not forget the mica insulation !). No sockets are provided for the three relays, since they can be directly soldered into place if the appropriate holes are drilled out to approximately 2.2 mm.

6.3.3. Components

T 1, T 2:	BSX 46 or 2 N 2219 or similar (TO 5) NPN
T 3, T 9:	BCY 59 or 2 N 2222 or similar (TO 18) NPN
T 4, T 8:	BC 160 or 2 N 2905 or similar (TO 5) PNP
T 5, T 7:	BD 675 or similar (NPN-Darlington) SOT 32
T 6:	BD 676 or similar (PNP-Darlington) SOT 32

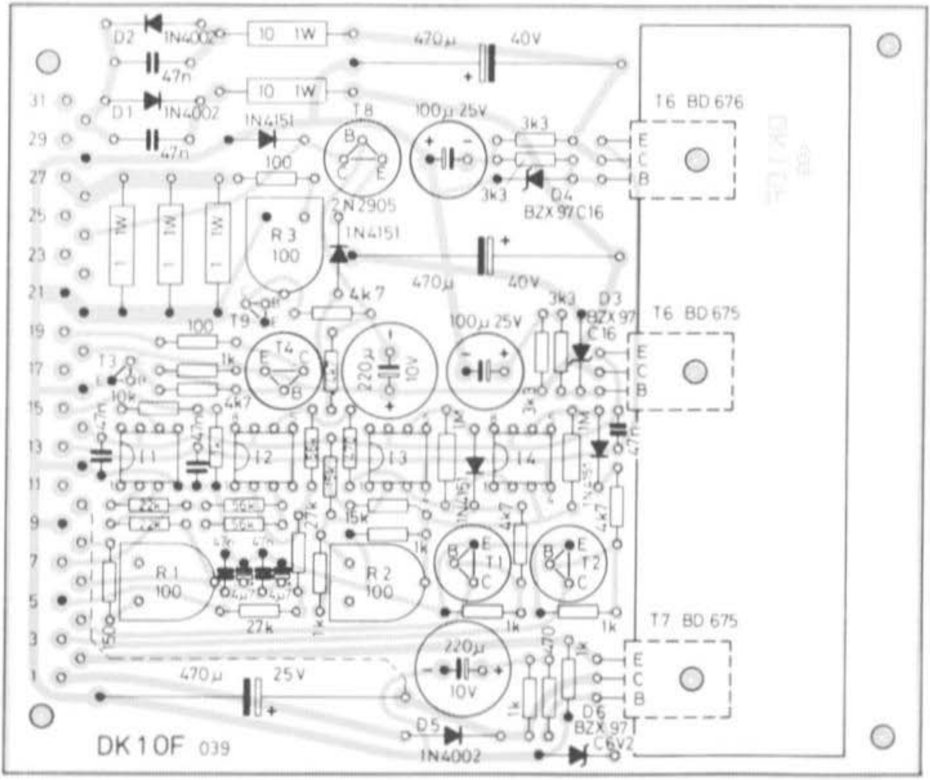

Fig. 10: PC-board DK 1 OF 039

I 1 - I 4:	TBA 221 B or 741 CN
D 1, D 2, D 5:	1 N 4002 or similar (30 V, 1 A)
D 3, D 4:	BZX 97/C 16 or other 16 V zener diode
D 6:	BZX 97/C 6 V 2 or other 6.2 V zener diode
LED 1, 2:	e.g. LD 57 (green)
LED 3:	e.g. LD 52 (red)
Rel 1-3:	V 23100 - V 7213 - F 104 (Siemens)
Tr :	Power transformer, primary 220 V, sec. 2 x 12 V at 2 A each; suitable for mounting on the PC-board TR 6512

Trimmer resistors: for horizontal mounting, spacing 10/5 mm

47 nF capacitors parallel D 1, D 2: min. 100 V = (plastic foil)
All other 42 nF capacitors: ceramic disk types 30 V =

Electrolytics 4.7 µF: tantalum drop type, 10 V =
Electrolytics 100 µF / 25 V and 220 µF / 10 V: vertical mounting, cylindrical, spacing 5 mm
Electrolytics 470 µF / 25 V, 40 V: Aluminium tubular capacitors, axial, spacing 35 mm

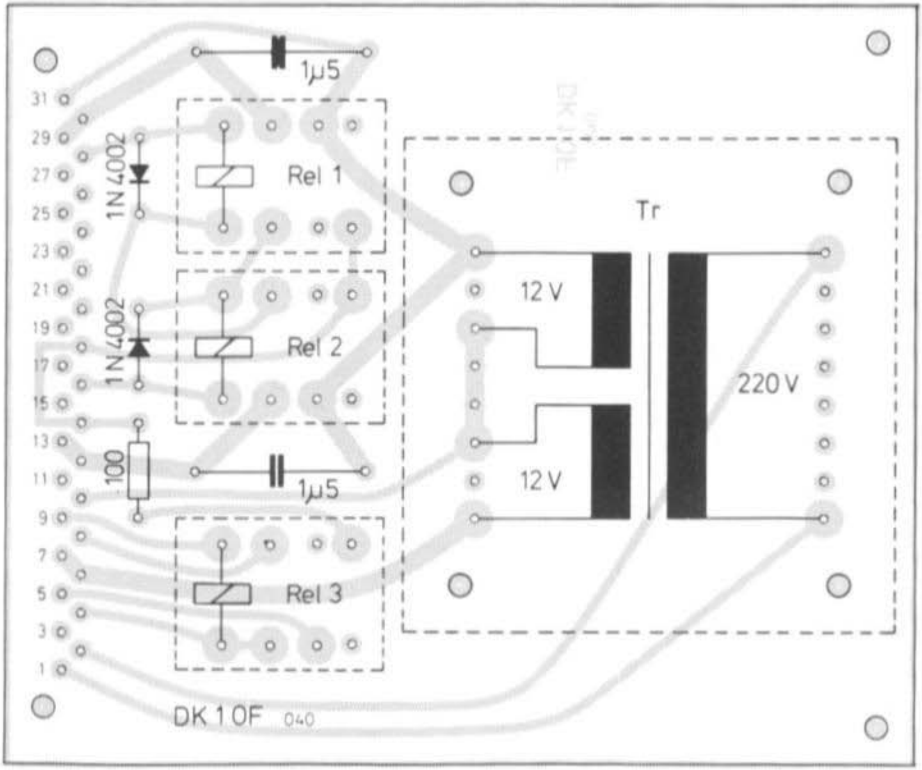

Fig. 11: PC-board DK 1 OF 040

6.4. Alignment of the Control Unit

Firstly place switch S 1 to the »internal« position and S 2 to »manual«. After switching on the unit (S 4), firstly check the stabilized voltages of ± 15 V and + 5 V. The connected rotator should be controllable using S 3. If the overload protection is actuated, R 3 (module 039) should then be adjusted to the ground (fully clockwise) stop.

If the high accuracy of the system is to be utilized to the full, it is advisable for a digital voltmeter to be available for alignment of the D/A converter. It should then be connected to pin 1 of module 038, and the reference voltage set to exactly 10 V with the aid of R 5. The numerical switches should be set to »000« and the voltmeter connected to the output of the circuit, pin 31. The reading is set to zero (± 10 mV are sufficiently accurate) with the aid of R 4. After this, »300« should be set and the output voltage adjusted to exactly 6 V with the aid of R 1, R 2 to 1.8 V at »90«, and R 3 to 180 mV at »009« with the aid of R 3. This means that the D/A-converter is completely aligned; at a setting of »360«, a voltage of exactly 7.20 V should be present at the output.

Resistor R 1 of module 039 is adjusted so that a voltage of 7.18 V can be measured at pin 6. If a digital voltmeter is not available, it is possible to set »359« on the numerical switches and for the voltage difference between pin 6 and pin 7 (039) to be aligned to zero; in this case, a meter in the voltage range of 0.5 V will be sufficiently accurate.

The programming is now made in any direction, and S 2 placed to the »digital« position. The rotator should now run to the required position and stop. Resistor R 2 (039) is now adjusted so that oscillation just stops. R 3 is now adjusted so that the overload protection just does not actuate during normal operation. These two last alignments should, however, not be made until the antenna construction is completed.

6.5. Direction Indication

Although the previously described system allows a correct operation of the rotator, one usually requires an optical indication of the actual antenna direction. Of course, it is possible to use the moving-coil meter of the original control unit. However, a more elegant and clear indication can be made in the form of a compass with North at the top, East to the right and so on. Such an indication using 16 light-emitting diodes in a circular array is now to be described:

As can be seen in **Figure 12**, the voltage proportional to the angle is taken from the potentiometer of the rotator and fed via connection 4 and a variable divider (R 2 / R 4) to amplifier I 1 to obtain the correct level. The whole LED driver circuit is accommodated in I 2; when the control voltage at pin 11 increases, the light-emitting diodes D 1 to D 16 will light up in sequence (with some overlap). The previously mentioned reference voltage of the D/A-converter is used as reference voltage (pin 12 and 13). The operating voltage for the light-emitting diodes is taken from D 5 (039), and need not be stabilized.

R 3 is a photo resistor and has the task of matching the LED-current (and thus their brightness) to the ambient light conditions. If this is not required, R 3 can be replaced by a bridge.

A 80 mm x 65 mm PC-board has been developed for accommodation of the LED-indicator. This board has been designated DK 1 OF 041 and is single-coated. The component locations are given in **Figure 13**. The light-emitting diodes D 1 to D 16 as well as the photo resistor are mounted on the conductor side of the board, and D 1 is at the top (North).

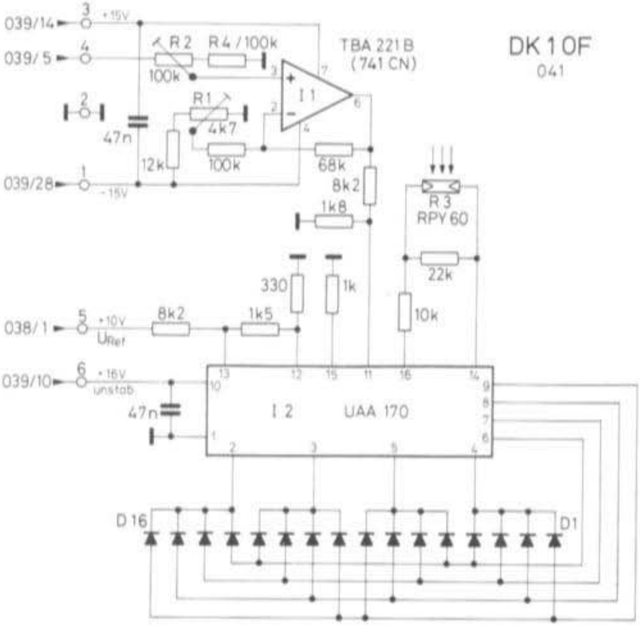

Fig. 12:
Directional indication using 16 light-emitting diodes

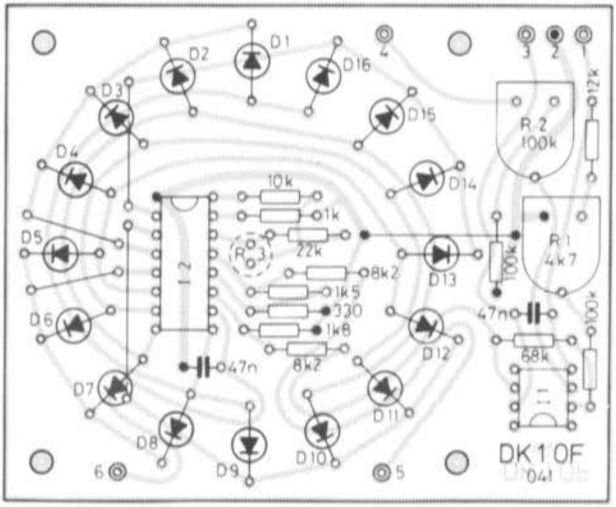

Fig. 13:
PC-board
DK 1 OF 041

6.5.1. Components

I 1:	TBA 221 B or 741 CN
I 2:	UAA 170 (Siemens)

D 1 - D 16:	e.g. LD 32 (red) or LD 37 (green)
R 3:	Photo resistor RPY 60 or RPY 61

Trimmer resistors: for horizontal mounting, spacing 10/5 mm

47 nF capacitors: ceramic disks ≧ 30 V

The alignment of the indicator module is simple. After connecting it to the rest of the unit, a direction of 45° is selected (»045«) and R 1 adjusted so that D 3 lights. After this, 315° is programmed and R 2 aligned so that D 15 lights. Both steps should be repeated several times since the adjustments interact. It should be noted that D 16 will light up at angles just below 360° and there will be no transition from D 16 to D 1.

7. OPERATION TOGETHER WITH AN ELEVATION ROTATOR

If the described control unit is to be used in conjunction with an elevation rotator (e.g. KR 500), it is advisable to make a few modifications. Since the rotation angle of such an elevation rotator only amounts to 180°, the highest valency bit of the data inputs will not be required. T 1 and the adjacent resistors (Figure 7) can therefore be deleted. In order to obtain the full output voltage of the D/A-converter of 7.2 V, R 6 should be increased to 39 kΩ. No further modifications are required.

It is, of course, possible for all 16 light-emitting diodes to be mounted in a semi-circle (180°) with D 1 and D 16 horizontal. However, if the PC-board is to be used, it is possible for only D 1 to D 9 to be provided, and for D 10 to D 16 to be deleted. R 4 (Figure 12) can be replaced by a bridge. The alignment is made in the same manner as described.

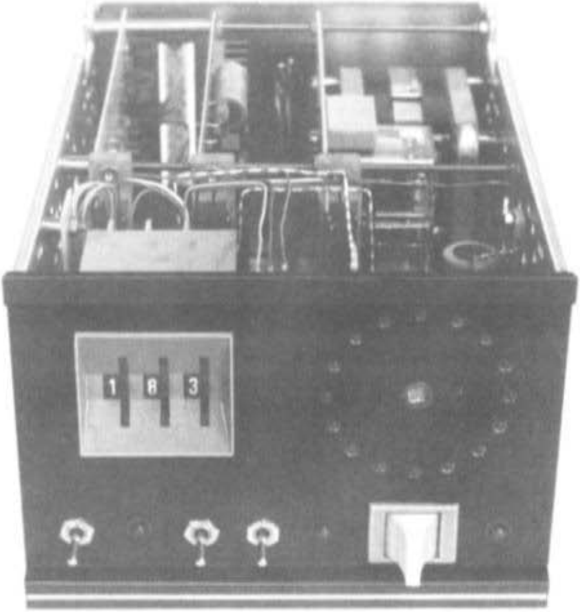

Fig. 15: Photograph of the author's prototype

8. FINAL NOTES

Not every amateur is interested in satellite communication, automatic tracking or EME communications. Although the described control unit is especially designed for these applications together with the computer system under development (1), the author feels that this system is also able to fulfill other requirements. For instance, it should be possible to adjust the antenna direction automatically to the required direction during shortwave communication by just entering the prefix of the required station. For VHF/UHF application, it is possible to enter the QTH-locator of the partner station to set the direction of the antenna, and possibly also obtain the distance to that station. Whether this can be realized in practice, depends on the experts in this field.

9. REFERENCES

(1) W. Kurz: Part 1: In this edition of VHF COMMUNICATIONS

(2) J. Kestler: Electronic Control of Antenna Rotators – Part 1
VHF COMMUNICATIONS 10, Edition 2/1978, pages 114 - 118

USING 3 " SILICON SOLAR CELLS FOR CONSTRUCTION OF SOLAR BATTERIES FOR PORTABLE OPERATION

After reading about DL 2 AM's operation of his portable station from solar cells during the Bavarian Mountain Field Day (BBT), it was thought that it would be of interest to study these components in more detail.

The technical details are based on silicon cells manufactured by Siemens, and were published in the Siemens Components Report No. 17 (1979), edition 2.

Silicon solar cells are suitable for the construction of solar batteries that allow direct conversion of sunlight into electrical energy. The basic material of these solar cells is P-doped, mono-crystaline silicon, which receives a N-conductive layer with the aid of a diffusion process. This technology allows a high resistance to damage, caused by high-energy particles such as electrons and protons.

The operating voltage of a solar cell is independent of the area and amounts to a maximum of approximately 0.5 V. The generated current is, however, dependent on the surface area of the solar cell. Light intensity determines both magnitudes. The higher the ambient temperature, the lower will be the voltage.

Solar cells are provided with tinned contact surfaces on the back and front that allow a reliable soft-solder connection to be made. The soldering temperature should not exceed 220 °C (10 s).

According to the required current, either round disks of 3 inch in diameter (SFH 120), half disks (SFH 121) or quarter disks (SFH 122) are used. The characteristic specifications are given in the tables and diagrams.

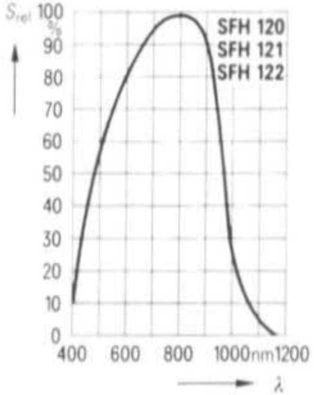

Fig. 1: Relative spectral sensitivity S_{rel} as a function of wavelength λ

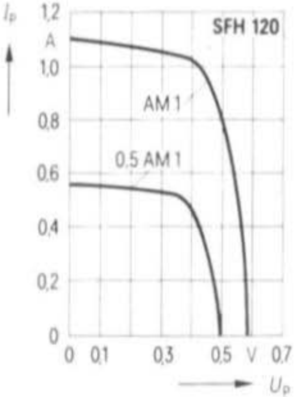

Fig. 2: Typical output characteristic for a SFH 120

$I_p = f(U_p)$; parameter: Illuminiation strength E_e: 100 mW/cm² ≙ AM 1

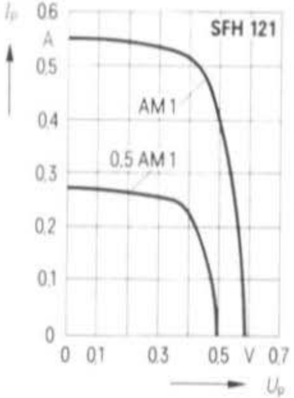

Fig. 3: Typical output characteristic for a SFH 121

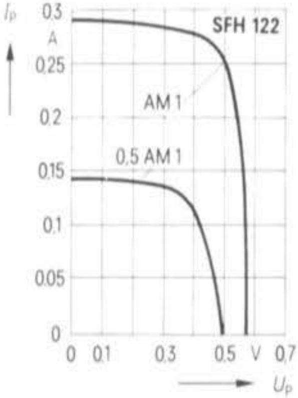

Fig. 4: Typical output characteristic for a SFH 122

Specifications *) SFH 120, SFH 121, SFH 122 (TU = + 25°C)

	SFH 120	SFH 121	SFH 122	
Short-circuit current I	1120	558	290	mA
Non-load voltage U_{nl}	580	570	570	mV
Photo current at I_p U_{out} = 400 mV	1050 (≧1020)	536 (≧520)	280 (≧270)	mA
Dimensions in mm	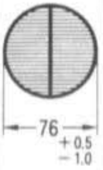	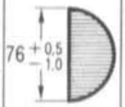	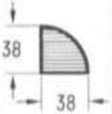	

*) The characteristic specifications were measured with sunlight having an illumination strength of 100 mW/cm²; 100 mW/cm² = AM 1 (Air Mass One). At AM 1, the sun will be 90° with respect to the horizon (i.e. in its zenith).

SOLAR PANEL SFH 120-36

The solar panel SFH 120-36 comprises 36 round solar cells type SFH 120 connected in series. In order to protect them against environmental effects and for easy handling, they have been mounted on an aluminium frame, which is provided with a transparent protective plastic cover on the sun side, and hermetically sealed. The space in between the plastic plate and solar cells is filled with a transparent plastic material.

The passified aluminium framework ensures that the intrinsic heat of the solar cells remains low, thus making it possible for the panel to be used even at higher ambient temperatures. Several panels can be combined to form larger solar batteries. The stable wiring allows simple interconnection. A built-in protective diode ensures that a connected accumulator cannot discharge itself via the panel.

The solar panel must undergo a temperature change, humidity and salt-water test, as well as a wind test before leaving the factory. The most important specifications are given in the following tables and diagrams.

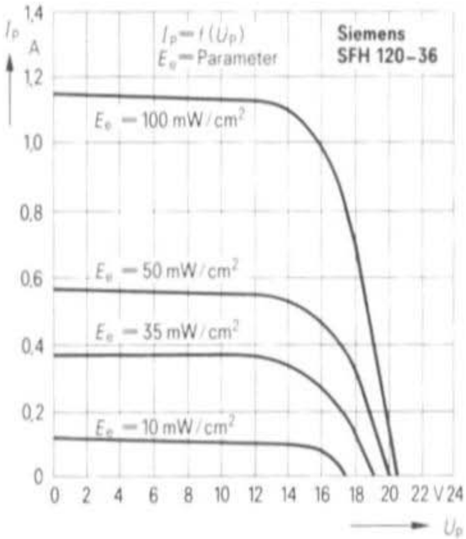

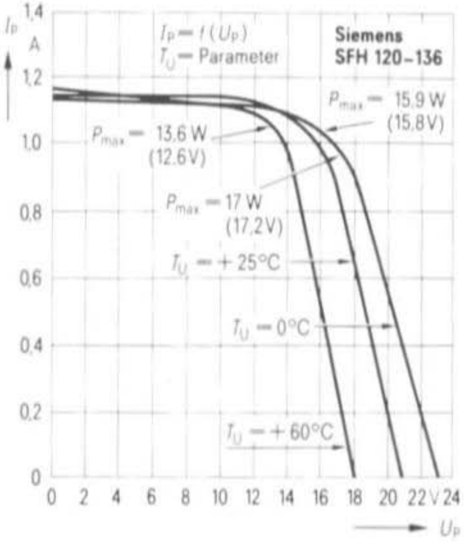

Most important specifications of solar panel SFH 120-36

Limit specifications		
Ambient temperature range	T	−30 bis +80°C
Storage temperature range	T_{st}	−30 bis +80°C
Specifications *) (T = + 25°C)		
Short-circuit current	I_{sc}	1100 mA
Non-load voltage	U_{nl}	20 V
Output current (U_{out} = 15.8 V)	I_p	1050 mA
Output power (U_{out} = 15.8 V)	P_{out}	15 W
Temperature coefficient of I_p	TC_{ip}	+ 90 µA/K
Temperature coefficient of U_p	TC_{up}	−75 mV/K
Weight	*G*	≈ 4 kg

Dimensions: 560 mm x 480 mm x 13 mm

***Die Kenndaten wurden bei Sonnenlicht mit einer Bestrahlungsstärke von 100 mW/cm² ermittelt; 100 mW/cm² ≙ AM 1; AM 1 = Air Mass One. Bei AM 1 steht die Sonne 90° über dem Horizont, d.h. im Zenit.**

*) The specifications were determined with sunlight having an illumination strength of 100 mW/cm²; 100 mW/cm² ≙ AM 1. At AM 1, the sun is 90° with respect to the horizon, i.e. in its zenith.

MATERIAL PRICE LIST OF EQUIPMENT
described in Edition 4/1979 of VHF COMMUNICATIONS

DL 6 MH 003	**10 GHz TRANSCEIVER POWER SUPPLY, MODULATOR, DOT-GENERATOR**		**Ed. 4/1979**
PC-board	DL 6 MH 003	single-coated with plan	DM 11.—
Semiconductors	DL 6 MH 003	3 IC's, 1 diode	DM 7.—
Minikit	DL 6 MH 003	3 trimmer pot., 6 resistors, 2 plastic foils, 2 ceramic caps., 6 tantalum electrolytics	DM 14.—
Microwave dev.	DL 6 MH 003	1 Gunn-Diode DGB 6844 A (15 mW) 1 1 N 23 E	DM 62.—
Metal and plastic pieces cut and drilled as shown in Figures 4 and 5 including waveguide, but without flange			DM 155.—
Flange	3 pieces	for waveguide R 100	DM 51.—
Kit	**DL 6 MH 003**	**complete with above parts**	**DM 295.—**
DK 1 OF 038-041	**PROGRAMMABLE DIGITAL ROTATOR CONTROLLER**		**Ed. 4/1979**
1. DIGITAL/ANALOG-CONVERTER			
PC-board	DK 1 OF 038	single-coated, undrilled, with plan	DM 15.—
Semiconductors	DK 1 OF 038	11 transistors, 7 IC's, 1 zener diode	DM 24.—
Minikit	DK 1 OF 038	5 trimmer pot., 10 metal-layer resistors, 40 carbon resistors, 9 ceramic caps., 1 tantalum electrolytics	DM 24.—
Connectors	DK 1 OF 038	one 31 pin connector set	DM 22.—
Kit	**DK 1 OF 038**	**with above parts**	**DM 84,—**
2. CONTROL AMPL., SWITCHING CIRCUIT, POWER SUPPLY			
PC-board	DK 1 OF 039	single-coated, undrilled, with plan	DM 15.—
PC-board	DK 1 OF 040	single-coated, undrilled, with plan	DM 15.—
Semiconductors	DK 1 OF 39/40	9 transistors, 4 IC's, 7 diodes, 3 zener diodes, 3 LED's	DM 38.—
Minikit	DK 1 OF 39/40	3 trimmer pot., 35 carbon resistors, 5 power resistors, 4 foil caps., 5 ceramic caps., 2 tantalum and 7 alu. electrolytics, 1 unpoled cap., 3 relays, 1 power transformer	DM 140.—
Connectors	DK 1 OF 39/40	two 31 pin connector sets	DM 44.—
Kit	**DK 1 OF 39/40**	**with above parts**	**DM 248.—**
3. DIRECTIONAL INDICATOR			
PC-board	DK 1 OF 041	single-coated, undrilled, with plan	DM 10.—
Semiconductors	DK 1 OF 041	16 LED's, 1 photo-resistor, 2 IC's	DM 38.—
Minikit	DK 1 OF 041	2 trimmer pot., 12 resistors, 2 ceramic caps.	DM 5.—
Kit	**DK 1 OF 041**	**with above parts**	**DM 52.—**

4. CASE AND CONTROLS

Case	DK 1 OF 38-41	comprising 1 plug-in, undrilled, 150 mm wide, front-panel alu., side and rear panels nickel-plated steel, with orange-coloured insert	DM 79.—
Controls	DK 1 OF 38-41	3 thumb-wheel switches, 10 diodes, 3 miniature toggle switches, 1 3-pos. switch, 1 13-pin connector set (BCD-input)	DM 89.—
Kit	**DK 1 OF case**	**with above parts**	**DM 166.—**

Complete kits for programmable Digital Rotator Controller complete with all parts DK 1 OF 039 - 041	**DM 540.—**

DC 3 NT	**METEOSAT VHF RECEIVER for 137.5 MHz**		**Ed. 4/1979**
PC-board	DC 3 NT 003	single-coated, with plan	DM 16.50
Semiconductors	DC 3 NT 003	10 transistors, 5 diodes, 1 LED, 5 IC's	DM 68.—
Minikit 1	DC 3 NT 003	11 ready-wound coils with screening cans, 1 miniature choke, 1 crystal filter, 1 crystal	DM 95.—
Minikit 2	DC 3 NT 003	2 trimmer pots., 52 resistors, 12 ceramic caps. with low TC, 7 styroflex caps., 9 plastic-foil caps., 24 ceramic bypass caps., 3 tantalum and 3 alu. electrolytics	DM 46.—
Kit	**DC 3 NT 003**	**complete with above parts**	**DM 220.—**

DB 2 GM	**SINGLE-STAGE 15 W LINEAR AMPLIFIER for 144 MHz with RF-VOX**		**Ed. 4/1979**
PC-board	DB 2 GM 001	single-coated, with plan	DM 15.—
Semiconductors	DB 2 GM 001	one each B 25-12, BC 413, BC 415, 1 N 4007 and three 1 N 4151	DM 59.—
Minikit 1	DB 2 GM 001	2 pl. foil trimmers, 2 airspaced trimmers, 8 ceramic caps., 1 tantalum, 1 alu. electrolytic and 3 bypass caps., 5 resistors, 1 six-hole ferrite choke	DM 24.—
Minikit 2	DB 2 GM 001	1 metal case, 2 BNC-conn., 3 miniature relays, 1 heat-sink	DM 62.—
Kit	**DB 2 GM 001**	**complete with above parts**	**DM 158.—**

Verlag UKW-BERICHTE, H. Dohlus oHG
Jahnstraße 14 – D-8523 BAIERSDORF
West-Germany · Telephone (0 91 91) 91 57 or (0 91 33) 855, 856

Bank accounts: Postscheck Nürnberg 30455-858 · Commerzbank Erlangen 820-1154 ·
Stadtsparkasse Erlangen 5-001.451 · Raiffeisenbank Erlangen 410.080

Professional Weather Satellite Reception Systems

We offer a complete system of inexpensive modules for professional applications. These are of special interest for meteological offices at smaller airports, for harbour and similar applications. They are also suitable for instruction at universities, and scientific institutes. A number of image processing systems and receivers are available to suit the application in question. Equipment is available, or under development for:

- The METEOSAT and GOES/GMS satellites in Geostationary orbit, or
- The NOAA and TIROS M satellites in polar orbits (136 - 138 MHz).

Technical specifications of the basic METEOSAT system:

PARABOLIC ANTENNA:
1.2 m dia., 24 dB gain

SHF-CONVERTER:
2-stage low-noise preamplifier with noise figure 3 dB

VHF-RECEIVER:
Noise figure 2 dB
AF-bandwidth:
800 - 4000 Hz
Subcarrier output:
2.4 kHz/1 V

VIDEO PROCESSOR:
Monitor tube and Polaroid camera

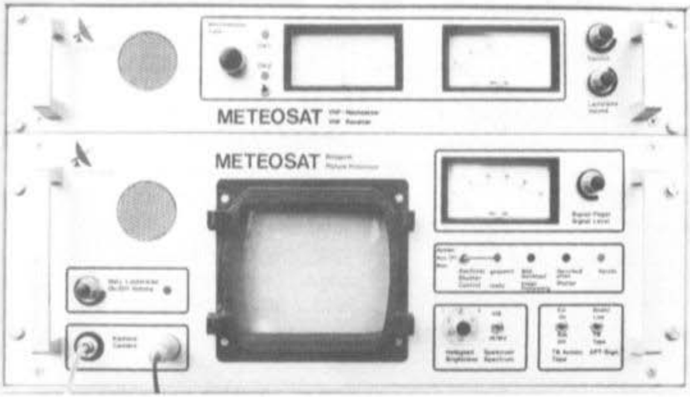

WIDEBAND OMNIDIRECTIONAL DISCONE ANTENNA

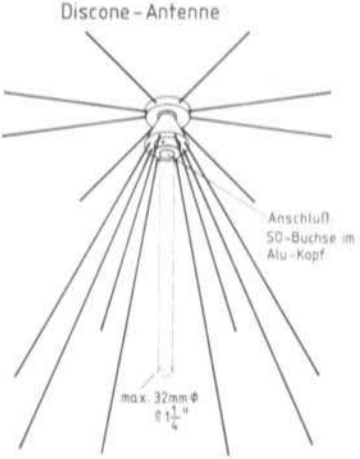

Frequency range:	80 - 480 MHz
Gain:	3.4 dB / λ/4
Impedance:	50 Ω
Power rating:	500 W
Polarisation:	Vertical
Connection:	SO 239 socket in the head
VSWR:	< 1.5 : 1
Weight:	3 kg
Dimensions:	Height: 1.00 m / Diameter: 1.30 m
Material:	Aluminium
Mounting:	Antenna head is put onto a 32 mm (1 ¼") dia. mast and secured by a screw.

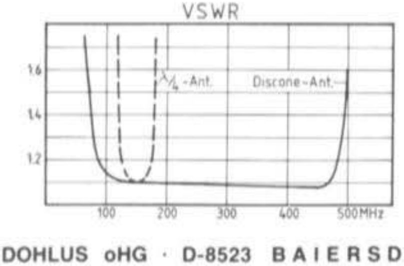

UKW-TECHNIK / UKW-BERICHTE · Hans DOHLUS oHG · D-8523 BAIERSDORF · Postfach 80 · Jahnstr. 14 · Telefon (09133) 855 + 856 (Anrufbeantworter) · Telex: 629 887

ANTENNA ROTATING SYSTEMS

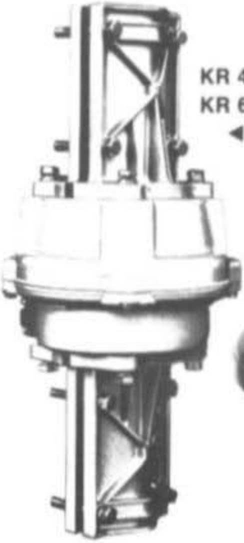
KR 400
KR 600
◄


KR 2000
◄


MX
1000
◄


ART 8000
◄

SPECIFICATIONS

Type of Rotator	KR 400	KR 600	KR 2000	MXX 1000	ART 8000	
Load	250	400	800	1000	2500	kg
Pending torque	800	1000	1600	1650	2450	Nm *)
Brake torque	200	400	1000	1200	1400	Nm *)
Rotation torque	40	60	150	180	250	Nm *)
Mast diameter	38 - 63	38 - 63	43 - 63	38 - 62	48 - 78	mm
Speed (1 rev.)	60	60	80	60	60	s
Rotation angle	370°	370°	370°	370°	370°	
Control cable	6	6	8	7	8	wires
Dimensions	270 x 180 ∅	270 x 180 ∅	345 x 225 ∅	425 x 205 ∅	460 x 300 ∅	mm
Weight	4.5	4.6	9.0	12.7	26.0	kg
Motor voltage	24	24	24	42	42	V
Line voltage	220 V / 50 Hz	220 V / 50 Hz	220 V / 50 Hz	220 V / 50 Hz	220 V / 50 Hz	
	50	55	100	150	200	VA

*) 1 kpm ≙ 9.81 Nm

Getting ready for OSCAR 9 ?
Then you need the Vertical Rotor KR 500

Especially designed for vertical tilting
of antennas for EME, OSCAR etc.

Type	KR 500
Load	ca. 250 kg
Brake torque	197 Nm *)
Rotation torque	40 Nm *)
Horiz. tube diam.	32 - 43 mm
Mast diameter	38 - 63 mm
Speed (1 rev.)	74 s
Rotation angle	180° (+ 5°)
Control cable	6 wires
Line voltage	220 V/50 Hz 30 VA
Weight	4.5 kg

UKW-TECHNIK / UKW-BERICHTE · Hans DOHLUS oHG · D-8523 BAIERSDORF ·
Postfach 80 · Jahnstr. 14 · Telefon (09133) 855 + 856 (Anrufbeantworter) · Telex: 629 887

CRYSTAL FILTERS OSCILLATOR CRYSTALS

SYNONYMOUS FOR QUALITY AND ADVANCED TECHNOLOGY

NEW STANDARD FILTERS

CW-FILTER XF-9NB see table

SWITCHABLE SSB FILTERS

for a fixed carrier frequency of 9.000 MHz

XF-9B 01
8998.5 kHz for LSB

XF-9B 02
9001.5 kHz for USB

See XF-9B for all other specifications
The carrier crystal XF 900 is provided

Filter Type		XF-9A	XF-9B	XF-9C	XF-9D	XF-9E	XF-9NB
Application		SSB Transmit	SSB	AM	AM	FM	CW
Number of crystals		5	8	8	8	8	8
3 dB bandwidth		2.4 kHz	2.3 kHz	3.6 kHz	4.8 kHz	11.5 kHz	0.4 kHz
6 dB bandwidth		2.5 kHz	2.4 kHz	3.75 kHz	5.0 kHz	12.0 kHz	0.5 kHz
Ripple		< 1 dB	< 2 dB	< 2 dB	< 2 dB	< 2 dB	< 0.5 dB
Insertion loss		< 3 dB	< 3.5 dB	< 3.5 dB	< 3.5 dB	< 3.5 dB	< 6.5 dB
Termination	Z_t	500 Ω	500 Ω	500 Ω	500 Ω	1200 Ω	500 Ω
	C_t	30 pF	30 pF	30 pF	30 pF	30 pF	30 pF
Shape factor		(6:50 dB) 1.7	(6:60 dB) 1.8	(6:60 dB) 1.8	(6:60 dB) 1.8	(6:60 dB) 1.8	(6:60 dB) 2.2
			(6:80 dB) 2.2	(6:80 dB) 2.2	(6:80 dB) 2.2	(6:80 dB) 2.2	(6:80 dB) 4.0
Ultimate rejection		> 45 dB	> 100 dB	> 100 dB	> 100 dB	> 90 dB	> 90 dB

XF-9A and XF-9B complete with XF 901, XF 902
XF-9NB complete with XF 903

KRISTALLVERARBEITUNG NECKARBISCHOFSHEIM GMBH
D 6924 Neckarbischofsheim · Postfach 7