J 20 419 F

VHF COMMUNICATIONS

A PUBLICATION FOR THE RADIO AMATEUR
ESPECIALLY COVERING VHF, UHF AND MICROWAVES

VOLUME NO. 8 SPRING 1/1976 DM 4.50

VHF
COMMUNICATIONS

Published by:
Verlag UKW-BERICHTE, Hans J. Dohlus oHG, 8521 Rathsberg/Erlangen, Zum Aussichtsturm 17
Fed. Rep. of Germany. Tel. (0 91 91) 91 57, (0 91 33) 33 40

Publishers:
T. Bittan, H. Dohlus

Editors:
Terry D. Bittan, G3JVQ DJOBQ, responsible for the text and layout
Robert E. Lentz, DL3WR, responsible for the technical contents

Advertising manager:
T. Bittan

VHF COMMUNICATIONS,
the international edition of the German publication UKW-BERICHTE, is a quarterly amateur radio magazine especially catering for the VHF/UHF/SHF technology. It is published in Spring, Summer, Autumn and Winter. The subscription price is DM 16.00 or national equivalent per year. Individual copies are available at DM 4.50, or equivalent, each. Subscriptions, orders of individual copies, purchase of P. C. boards and advertised special components, advertisements and contributions to the magazine should be addressed to the national representative.

Printed in the Fed. Rep. of Germany by R. Reichenbach KG, 85 Nuernberg, Krelingstraße 39

We would be grateful if you would address your orders and queries to your representative :

VERTRETUNGEN	REPRESENTATIVES:
Austria	Hans J.Dohlus, Creditanstalt Bankverein WIEN Kto.17-90.599; PSchKto.WIEN 1.169.146
Australia	WIA PO Box 150, TOORAK, VIC.3142, Tel.24-8652
Belgium	see Germany, PSchKto. 30455-858 Nürnberg
Canada	see USA
Denmark	Sven Jacobson, SM7DTT, Gamlakommungarden 68, S-23501 VELLINGE, Tel.Malmö 420430 Postgiro: Köpenhamn 14985
France	Christiane Michel, F5SM, F-89 PARLY, Les Pillés
Finland	see Sweden
Germany	Verlag UKW-BERICHTE H.Dohlus oHG, D-8523 BAIERSDORF, Jahnstraße 14, Tel.09133-3340 Konten: Postscheckkonto Nürnberg 30455-858, Commerzbank Erlangen 820-1154, Deutsche Bank Erlangen 76-40360
Holland	see Germany, Postscheckkonto Nürnberg 30455-858
Italy	STE s.r.l.(I2GM) Via Maniago 15, I-20134 MILANO, Tel.(02) 215 7891, Conto Corr.Post. 3/44968
Luxembourg	P.Wantz, LX1CW, Télévision, DUDELANGE, Postscheckkonto 17005
New Zealand	E.M.Zimmermann, ZL1AGQ, P.O.Box 56, WELLSFORD, Tel.8024
Norway	Henning Theg, LA 4 YG, Postboks 70, N-1324 LYSAKER, Postgirokonto 3 16 00 09
South Africa	SA Publications, PO Box 2232, JOHANNESBURG 2000, Telephone 22-1496
Spain + Portugal	Julio A.Prieto Alonso, EA4CJ, MADRID-15, Donoso Cortès 58 5º-B, Tel.243.83.84
Sweden	Sven Jacobson, SM7DTT, Gamlakommungarden 68, S-23501 VELLINGE, Tel.040-420430 Postgiro: 430965-4
Switzerland	Hans J.Dohlus, Schweiz.Kreditanstalt ZÜRICH, Kto.469.253-41; PSchKto.ZÜRICH 80-54.849
UK	ARBBG, 20 Thornton Cres.OLD COULSDON, CR3 1LH
USA-East Coast	VHF COMMUNICATIONS Russ Pillsbury, K 2 TXB, & Gary Anderson, W 2 UCZ, 915 North Main St., JAMESTOWN, NY 14701, Tel. 716 - 664 - 6345
USA-West Coast	C. Graff, K 7 CHV, 2501 148th Ave. SE No.E-11, BELLEVUE, Wash. 98007
Yugoslavia	Tito Cvrković, YU-56000 VINKOVCI, Lenjinova 36

A PUBLICATION FOR THE RADIO AMATEUR
ESPECIALLY COVERING VHF, UHF AND MICROWAVES
VOLUME NO. 8 SPRING EDITION 1/1976

Home construction of amateur radio equipment is becoming more and more limited to the UHF and microwave bands. There is, for instance, an increasing interest in ATV transmissions on the 24 cm and 13 cm bands. Unfortunately, the former band cannot be used in some areas due to interference from high-power radar stations. VHC COMMUNICATIONS is to continue to try and bring professional technology to the radio amateur, and to assist him in the home construction of equipment and antennas for these higher bands.

It is hoped that the experience gained at the higher microwave frequencies, especially by British amateurs, can also be placed at the disposal of our readers. Dr. Dain Evans, G 3 RPE has offered to assist us especially with respect to the 3 cm band (10.0 to 10.5 GHz).

SALZBURG 1 - A FOX-HUNT RECEIVER FOR THE 2 m BAND

by P. Göschlberger, OE 2 JG and G. Herr, OE 2 HXL

The authors have designed a fox hunt (DF) receiver that is so easy to construct that even beginners can expect no difficulties. The design of this receiver resulted from considerable practical experience during fox hunts (DF-competitions) and fulfills all mechanical and electrical demands made upon it. Special attention has been paid to the ease of operation required during such activities.

As has been shown in Salzburg/Austria, the receiver is very suitable for construction as a club project. Since no special components are required, the cost of construction is very low, making it suitable for younger amateurs and SWL's. For this reason, no commercially available case is used, but rather a very detailed description is to be given for the construction of all parts including case.

Of course, all radio amateurs and constructors have full rights to copy the design and construct this receiver. However, the construction and sale of this receiver for profit is not allowed.

A 9 V transistor battery is used as power supply. The current requirements are in the order of 12 to 15 mA. The battery is accommodated in the handle of the receiver. An HB 9 CV antenna is mounted on top of the receiver; the outer parts of the elements can be exchanged so that flexible elements are used in difficult country such as in woods and forests, whereas stiffer elements are used when in the open (see **Figure 1**).

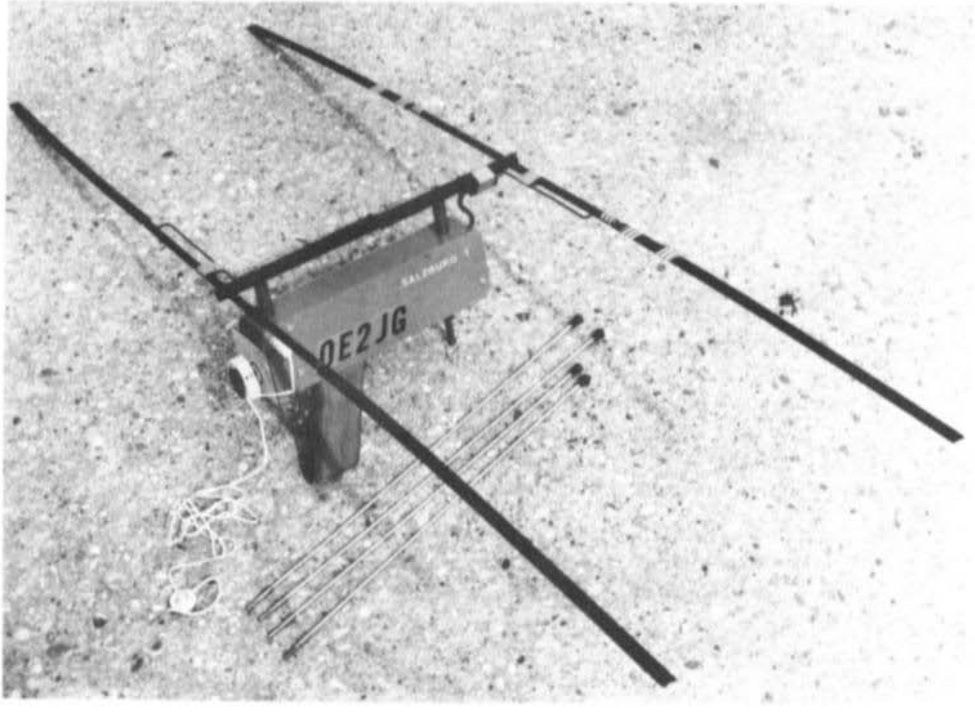

Fig. 1: DF-receiver SALZBURG 1 for 2 m

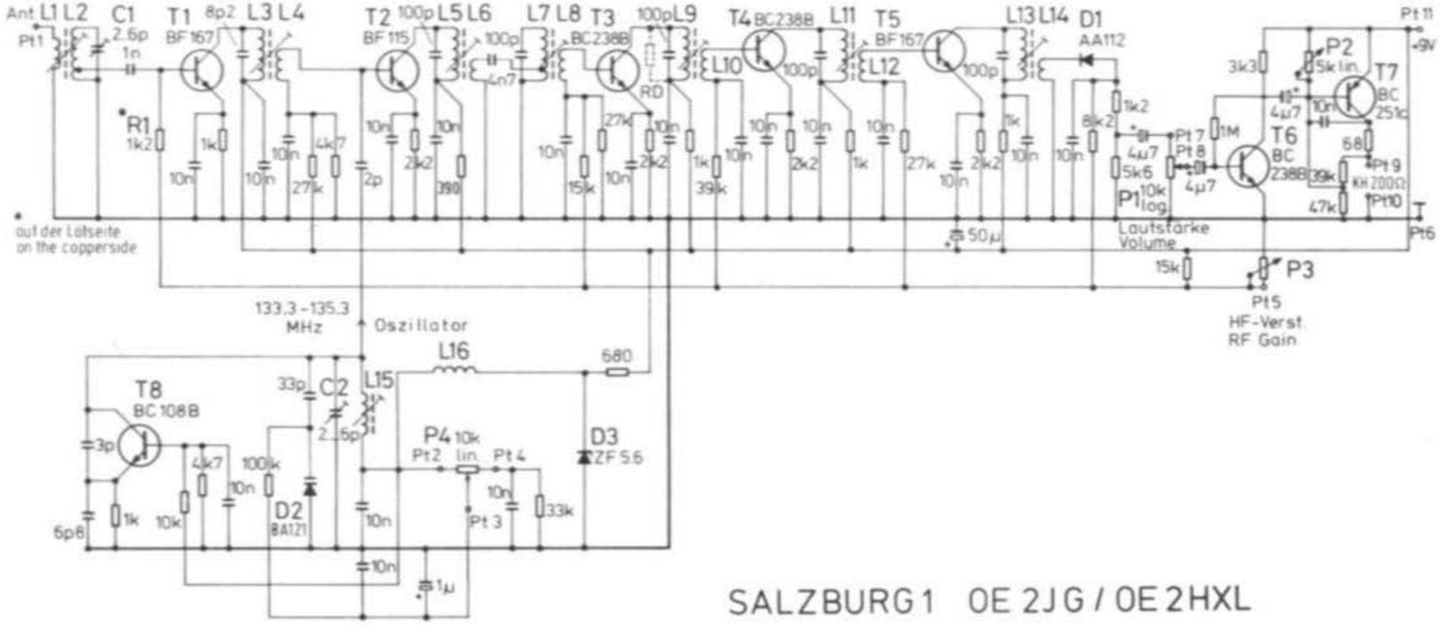

Fig. 2: Circuit diagram of the foxhunt receiver

1. CIRCUIT DESCRIPTION

The relatively simple circuit of this receiver is given in **Figure 2**. The fox-hunt receiver is a single conversion superhet with varactor tuning of the 133 MHz local oscillator. A 10.7 MHz intermediate frequency is used.

The VHF-preamplifier stage comprising transistor T 1 and two resonant circuits is followed by the mixer (T 2), an inductively coupled bandpass filter and three resonant circuits for selectivity. The signal is demodulated in the AM-detector (D 1) and is passed via the volume control (P 1) and fed to a two-stage AF-amplifier suitable for feeding a headset (T 6 and T 7). The trimmer potentiometer T 2 is used to adjust the operating point of the AF-output stage. The dynamic range of the automatic gain control has been designed to be relatively small so that it is mainly the manual RF gain adjustments (P 3) that provides the large dynamic range of the receiver. The adjustment of potentiometer P 3 is a measure of the field strength of the »fox« transmitter. Since the volume of the demodulated signal is not kept constant by use of an automatic gain control having a large dynamic range, the direction of the transmitter can easily be found according to the volume of AF-signal. This means that an S-meter is not required. This improves the mechanical stability of the receiver.

The local oscillator (T 8) is tuned with the aid of the varactor diode D 2, and operates in the order of 134 MHz. It is fed with a stabilized voltage of 5.6 V from diode D 3.

2. CONSTRUCTION OF THE CASE

The case comprises a bent frame with two aluminium side panels. One of these panels is glued into place, the other held by screws. Firstly, a metal strip of 508 mm by 35 mm by 1.5 mm thick is bent as shown in **Figure 3**. This is made commencing at the intersection above the handle and the four 90° bends are made in the direction of the arrow, each having a radius of approx. 8 mm. The join is then a glued with a dual-component adhesive (e.g. UHU-Plus). It is not necessary to wait until the adhesive has hardened completely before this framework is a glued to the left side plate (as seen from the front) of 203 mm by 63 mm by 1 mm thick.

Of course, the side panel should be cleaned thoroughly and roughened slightly and then placed on a flat surface. Adhesive is now provided around the edge of the framework after which it is placed on to the side panel and weighted. After hardening, the inner join between framework and side panel is sealed with adhesive after which this part of the case is hardened in an oven at approx. 120°C. The edges of the side panel protruding over the framework are then finally removed with the aid of a file.

After constructing the base plate for the handle **(Figure 4)** and the two spacers **(Figure 5)**, the following holes are provided in the case:

Upper side: For the two spacers for the antenna
Front: For the antenna cable
Lower side: For P 3, P 1, the sliding ON-OFF switch and base plate for the handle with holes for the battery connections **(Figure 6)**
Rear cover: For the tuning potentiometer P 4
Side plate: For the headset connector

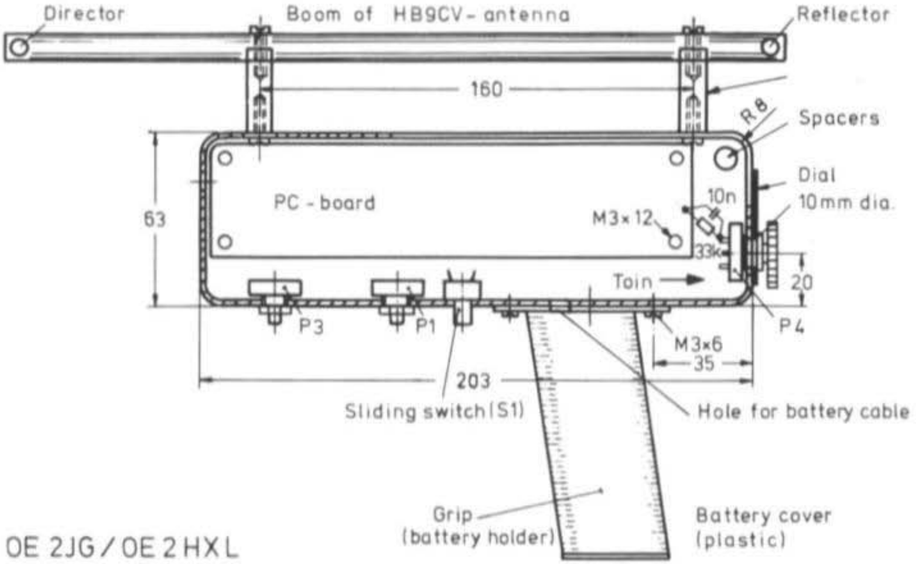

Fig. 3: Side view and dimensions of the DF-receiver

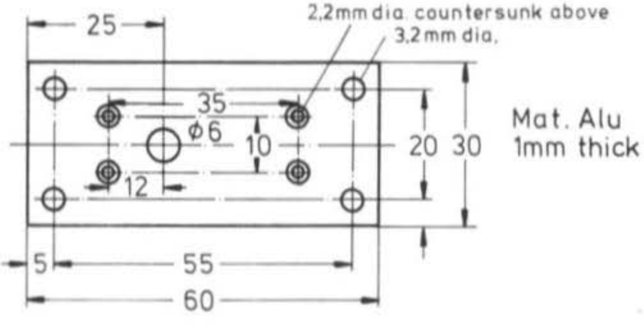

Fig. 4: Base plate of grip

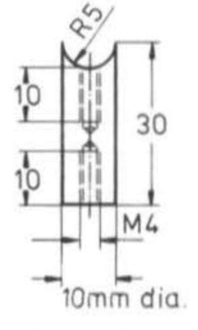

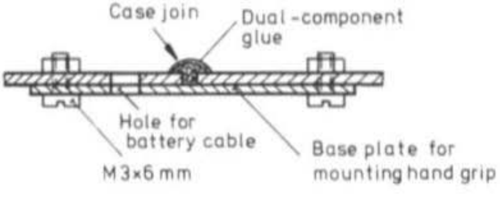

Fig. 5:
Spacer

Fig. 6:
Mounting of the base plate in main frame

After this, the scale should be constructed and glued to the frame as shown in **Figure 7**. This scale is made from plastic (Formica) having a matt surface. No markings are made on this scale so that it is possible for the frequency of each »fox« to be marked with the aid of a wax pencil after which the marking can be removed easily after the fox has been found. This is to ensure that a transmitter that has already been found is not hunted for the second time.

The corners of the second side panel (not shown) is also filed so that it fits on to the frame. **Figure 8** shows how this plate and the PC-board are screwed to the frame.

Finally, the handle of the receiver, which is also battery holder, should be made. The plywood parts are sawn as shown in **Figure 9** and glued together. After this, the corners should be rounded so that the handle fits comfortably in the hand. After this, it is cut somewhat diagonally as shown in **Figure 9** similar to a pistol grip. On the other side, the base plate of the handle is connected with adhesive and four countersunk wood screws.

The handle can now be screwed to the case using four screws (M 3 by 6 mm) below the join of the frame. The cover at the lower end of the handle is screwed into place using two wood screws: A countersunk screw is used on one side, whereas a screw with a ring or similar should used on the other sides so that the cover can be removed without tools in order to exchange the battery.

2.1. Parts required for the case and handle

Number	Material	Dimensions in mm	Required for part (see figure)	
1	Alu. plate	508 x 35 x 1.5	Case framework	
2	Alu. plate	203 x 63 x 1	Cover	(Fig. 3)
1	Alu. plate	65 x 30 x 1	Base plate	(Fig. 4)
2	Plastic rods	10 mm dia. x 30	Spacers	(Fig. 5)
1	Plastic, matt	60 x 40	Scale plate	(Fig. 7)
1	Plastic	40 x 26	Battery cover	(Fig. 9)
3	Alu. rods	6 mm dia. x 29	Spacers	(Fig. 8)
2	Plywood	100 x 40 x 4	Handle	(Fig. 9)
2	Plywood	100 x 18 x 6	Handle	(Fig. 9)

3. ELECTRICAL CONSTRUCTION

The circuit of the DF receiver SALZBURG 1 is accommodated on a single-coated PC board of 180 mm by 50 mm which has been designated OE 2 JG 001. This PC board and the components locations are given in **Figure 10**. The upper left corner of the PC board should be rounded to fit into the case. The VHF preamplifier, mixer and oscillator stages, are screened from another with the aid of a T-shaped screening panel of 25 mm in height (tin plate). The IF inductances L 7 to L 14 are accommodated in four screening cans of 15 by 15 mm. The construction and installation of all IF-inductances is shown in **Figure 11**. The first IF coil L 5 with coupling link L 6 is not screened.

The three VHF inductances for the preamplifier and oscillator stages are constructed from silver-plated copper wire wound on a 5 mm diameter coilformer **(Figure 12)**. With a few exceptions, all resistors and electrolytic capacitors are mounted vertically. A photograph showing the construction of the receiver is given in **Figure 13**; the VHF-input Pt 1 is to be seen on the upper right.

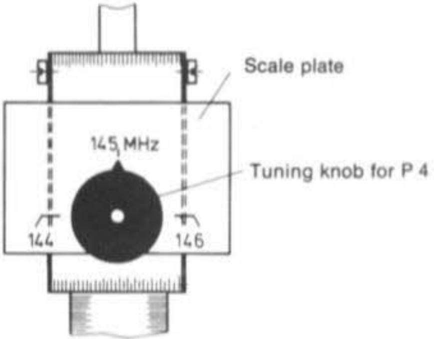

Fig. 7: Rear view of DF-receiver

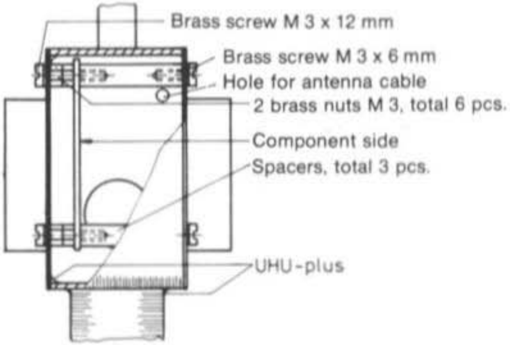

Fig. 8: Front view of DF-receiver

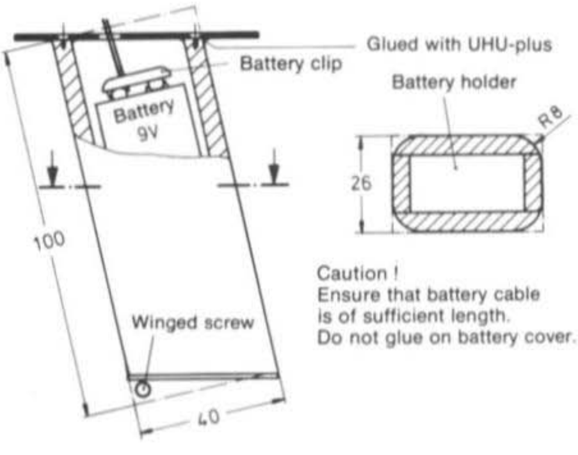

Caution !
Ensure that battery cable
is of sufficient length.
Do not glue on battery cover.

Fig. 9: Wooden grip (battery holder)

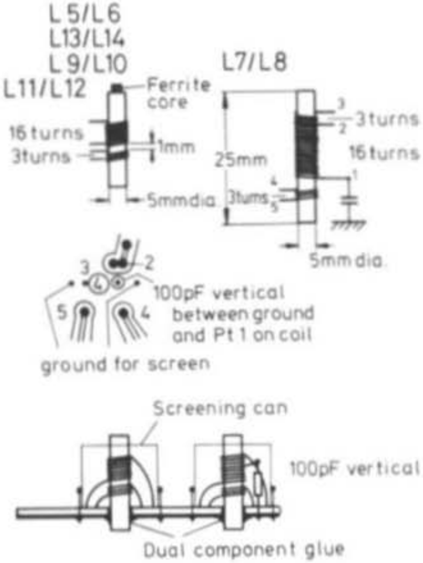

Fig. 11: IF-inductances

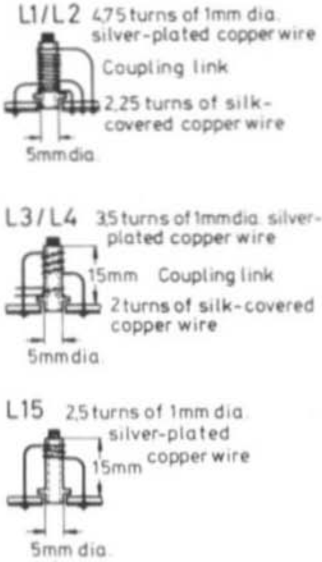

Fig. 12: VHF-inductances

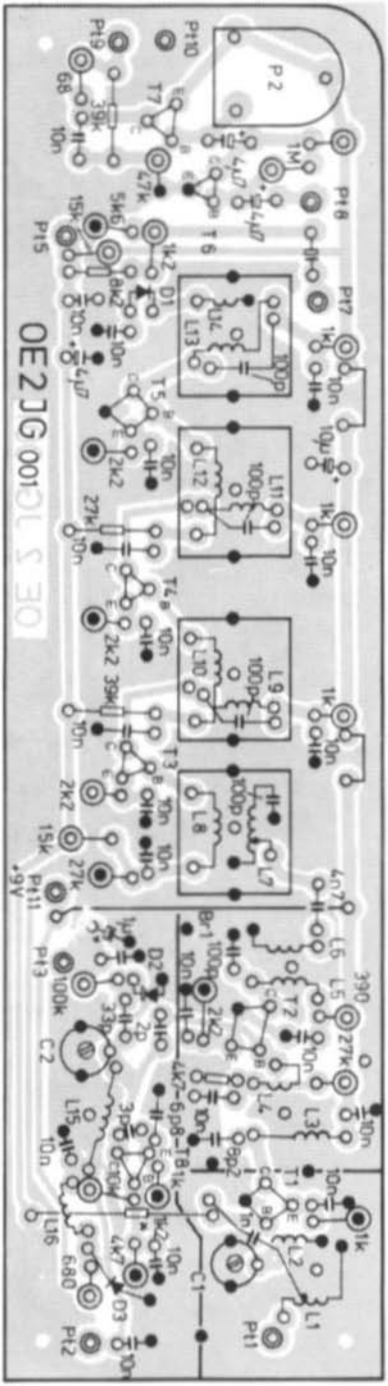

Fig. 10: PC-board OE 2 JG 001 and component locations

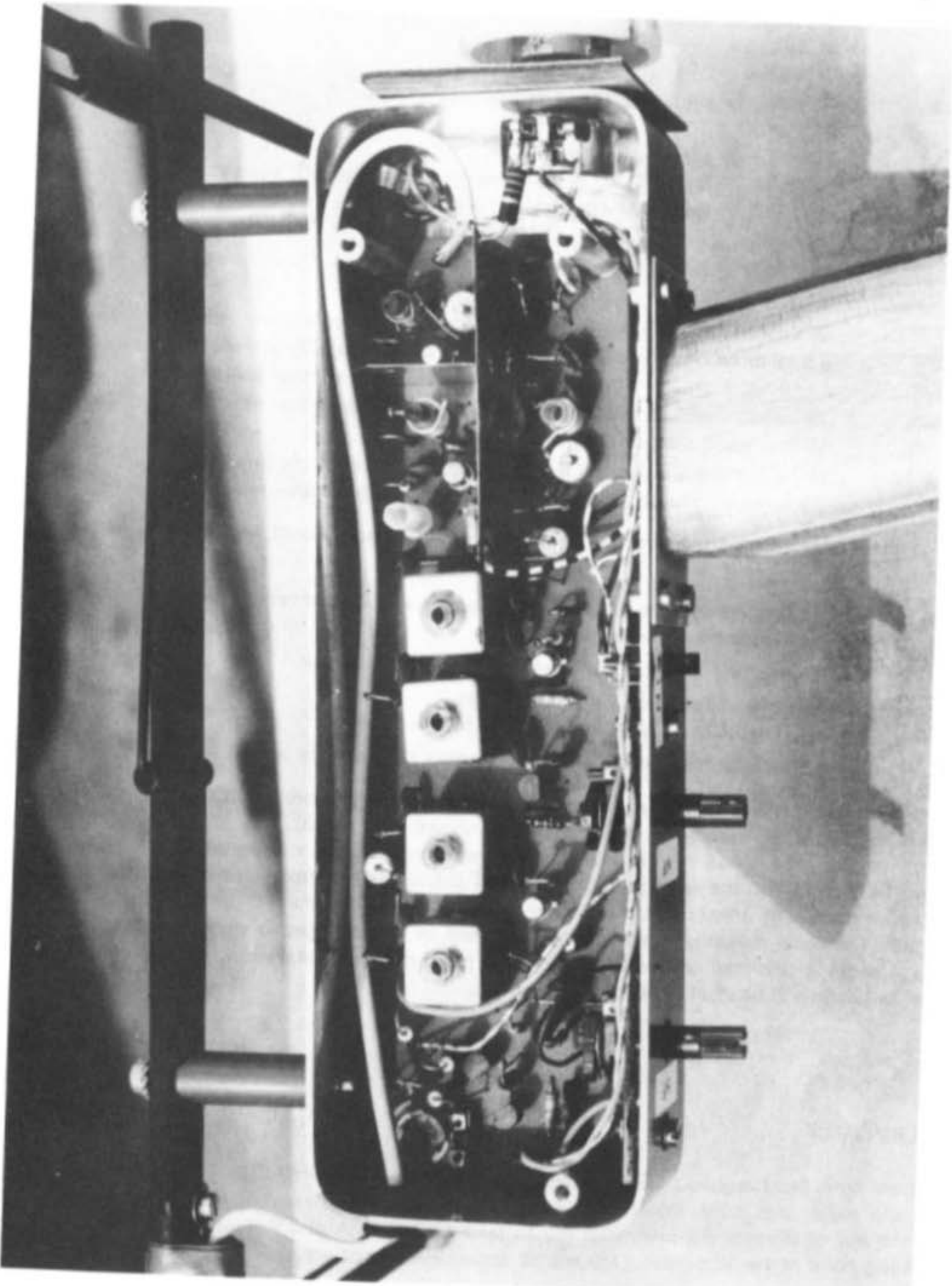

Fig. 13: Photograph of the author's prototype

3.1. Component details

T 1: BF 167
T 2: BF 115

T 3 - T 4: BC 238 B or similar AF-transistors in plastic case
T 5: BF 167
T 6: BC 238 B or similar AF-transistor
T 7: BC 251 C (ITT) or BC 307 B (Siemens) or similar PNP-AF transistor
T 8: BC 108 B or similar AF-transistor in a metal case

D 1: AA 112 or AA 116 or similar germanium diode
D 2: BA 121 (Tfk) or BB 109 (Siemens) or similar (approx. 20 pF / 4 V)
D 3: 5.6 V zener diode

L 1, L 2: 4.75 / 2.25 turns wound on a 5 mm diameter coilformer with VHF-core
L 3, L 4: 3.5 / 2 turns wound on a 5 mm diameter coilformer with VHF-core
L 5, L 6: 16 / 3 turns on a 5 mm coilformer with VHF-core, without screening

L 7, L 8: 16 turns wound on a 5 mm coilformer in a screening can of 15 mm by 15 mm, coil tap at 3 turns.

L 9 - L 14: 16 / 3 turns wound on a 5 mm coil former in screening can
L 15: 2.5 turns wound on a 5 mm coilformer, if possible without core

Silk-covered enamelled-copper wire of approx. 0.2 mm diameter should be used for the IF coils;

L 16: 10 turns of 0.4 mm dia. (26 AWG) copper wire wound on a 3 mm former, self supporting

C 1, C 2: 6 pF plastic foil or ceramic trimmer of 7 mm diameter.

5 pieces 100 pF styroflex capacitors for the IF circuits.
Ceramic disc capacitors with a low TC are required for the oscillator.

P 2: trimmer potentiometer, 5 kOhm, spacing 12. 5 mm by 10 mm.

In order to ensure that the ground surface of the PC board is not broken in the VHF and IF range, the operating voltage is fed via three bridges (Br 1 - Br 3). The locations of the mounting holes are found on the PC board before mounting the components. The board should be placed into the case so that it touches the upper and front part of the case. As has been previously mentioned, the upper lefthand corner of the PC board should be rounded. The three mounting holes are then marked, or drilled together with the PC board. Enough room is provided on the lower side and rear panel for installation of the potentiometer, switches and headset connector **(Figure 13)**.

4. ALIGNMENT

The only equipment required for alignment of the foxhunt receiver SALZBURG 1 is a modulated dip meter and a mA meter. The total current drain of the receiver is firstly adjusted with the aid of trimmer potentiometer P 2 to read 12 to 15 mA at 9 V. This means that the operating point of the AF output stage will be approximately correct.

After this, the IF circuits, L 5 to L 13 are aligned to 10.7 MHz. This is made by modulating the dip meter and aligning each of the stages for maximum volume of the modulated AF. If any tendency to self-oscillation is found, the IF inductance L 9 should be damped with a 6.8 kOhm resistor as indicated in the circuit diagram.

After this, the oscillator circuit should be aligned to 134.3 MHz at the central position of the tuning potentiometer P 4. This corresponds to an input frequency of 145 MHz. Finally the tuning range is checked: if it is too large, the core of L 15 should be slightly extracted, and the capacitance of trimmer C 2 slightly increased. In this case, the capacitance of the varactor diode has less effect on the capacitance of the resonant circuit. If this measure is still not sufficient, a smaller value than 33 pF should be used for the coupling capacitor. The opposite measures should be used when the tuning range is found to be too small. It should amount to approximately 180° on the scale, in order to ensure a slight reserve is available at both ends of the tuning range.

Finally the two resonant circuits of the VHF preamplifier are aligned at 145 MHz for maximum gain. The two coupling links are both close-wound and are placed near to the cold end of the coils of the resonant circuits.

5. THE HB 9 CV ANTENNA

Since the foxhunt receiver should be kept as small as possible when not in use, it is provided with a detatchable two-element HB 9 CV antenna. This type of antenna is so well-known that only a few details regarding the material used for manufacture are to be given.

When operating in difficult country such as in woods and forests it is very advisable for the outer parts of the elements to be flexible. For this reason, flexible steel measuring tapes are used that ensure that the elements spring back into place immediately after each obstruction. In free country, stiffer elements are more favourable that do not bend whilst running. It is important that all elements are marked (e.g. with coloured insulating tape) so that the director and reflector elements are placed in the correct positions. If they are incorrectly mounted, the antenna will squint considerably.

The inner parts of all elements are of equal length and are manufactured from brass tube with an outer diameter of 6 mm. They are placed into holes on the boom at position A and B (see **Figure 14**). The elements can be soldered into place more easily on an electric cooker than when using a soldering iron. If the solder is fed to the joint on the inside, a good joint with a flat outer surface will be made. The inner diameter of the elements is 4 mm which means that the outer parts of the elements can be plugged in using banana plugs **(Figure 15)**.

Approximately 52 cm of 2 mm diameter copper wire is required for the matching line, which should be straightened before use. The wire is placed through the feedthrough in the boom and the bending is commenced at one end **(Figure 14)**. After the matching line has been soldered into place, the feedthrough and line itself are glued into place.

The feedpoint of the antenna on the matching line is in the vicinity of the director to boom connection. A ceramic capacitor of 20 pF is soldered between this point and the inner conductor of the coaxial cable. This capacitor should be enclosed in plastic and made waterproof. The outer conductor of the coaxial cable is soldered to a solder tag mounted on the boom of the antenna. Further details are given in **Figure 16**.

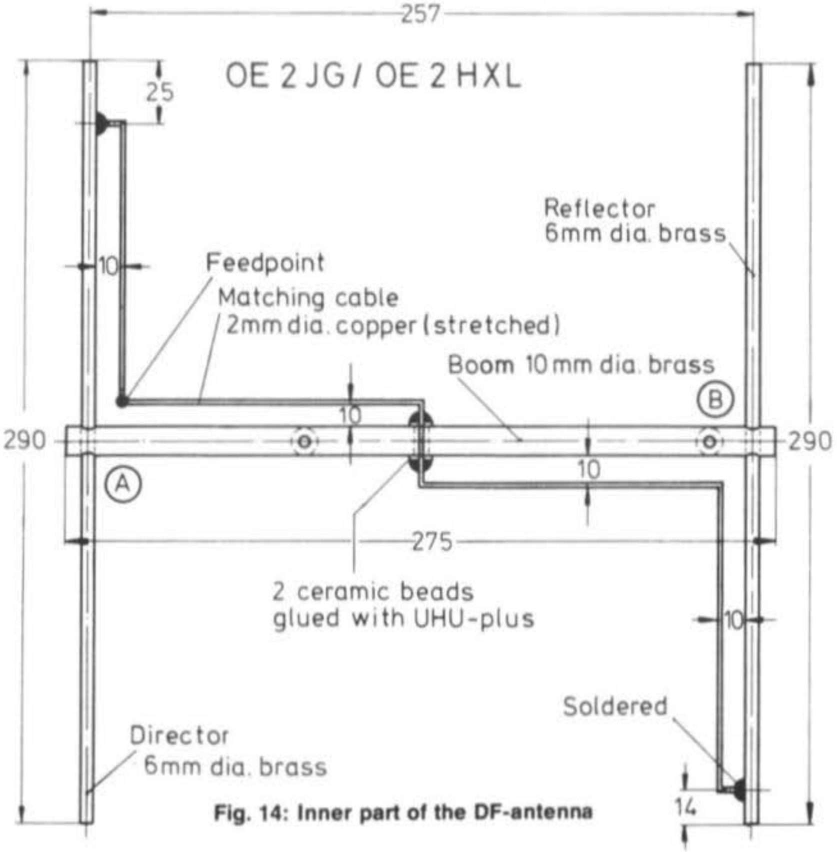

Fig. 14: Inner part of the DF-antenna

Fig. 15: The two different outer parts of the elements

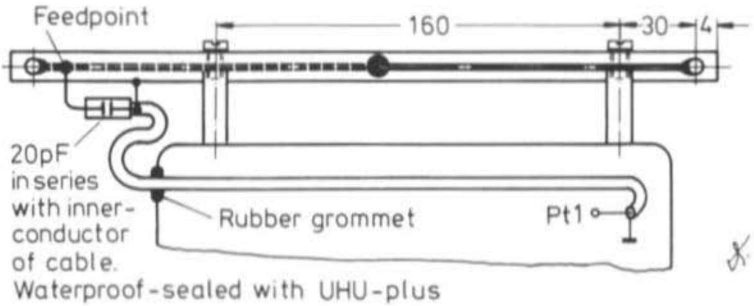

Fig. 16: Construction and connection of the HB 9 CV - antenna

MATCHING CIRCUITS FOR SCHOTTKY RING MIXERS

by J.Kestler, DK 1 OF

1. INTRODUCTION

Mixer circuits equipped with Schottky ring mixers have considerably better large signal characteristics than unbalanced mixers using bipoler transistors, FET's or MOSFET's. However, the criterion is that the Schottky ring mixer is terminated with the correct impedance (usually 50 Ohms) at all ports. This termination must be provided not only for the required frequency, but for all possible conversion products. Only when this criterion is fulfilled will it be possible to achieve the data given in the data sheets for intercept point and spurious rejection ($3 f_1 \pm f_2$). The problems involved were discussed in detail in (1).

The following article is to give several practical circuits, that can be calculated easily, and designed for a given application.

2. CIRCUITS

2.1. Low-pass filter coupling

Application: A ring mixer is to be matched to a signal source having the output impedance R upto a cutoff frequency f_{co}. In addition to this, the mixer must be correctly terminated upto very high frequencies, in other words loaded with the resistance R. A suitable circuit is given in **Figure 1**.

Fig. 1: Low-pass filter coupling to a ring mixer

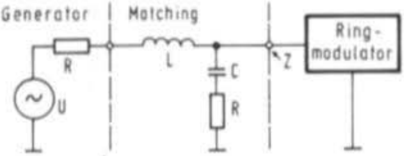

The ring mixer will be provided with the impedance Z at the output of the matching network:

$$Z = \frac{1}{\frac{1}{R + j\omega L} + \frac{1}{R + \frac{1}{j\omega C}}}$$

According to our requirements, Z must correspond to R for all values of ω. This leads to the following conditions:

$$\frac{L}{C} = R^2. \qquad \text{(Equ. 1)}$$

Naturally, there are an infinite number of combinations of L and C. The product L x C determines the cutoff frequency above which the output power from the generator will not be passed to the mixer:

$$f_{co} = \frac{1}{2\pi \times \sqrt{LC}} \qquad \text{(Equ. 2)}$$

There are cases where the inductance L is an integral part of the output impedance of the signal source, e.g. in the case of a signal generator with output transformer(stray inductivity).

Example: The output of an emitter-follower is to be matched over a wide frequency band to a Schottky ring mixer. The output impedance of this stage amounts to 30 Ohms; a choke of 1 µH in series with the output is required for neutralization. The question is now how to design the matching circuit, and upto which cutoff frequency the circuit can be used. Slight losses are permissible, but the mixer must be terminated with 50 Ohms at all frequencies.

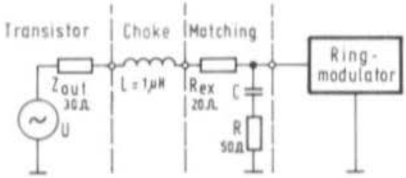

Fig. 2: Example of a wideband coupling between ring mixer and emitter-follower

The solution to this problem is given in **Figure 2.** Since the output impedance of the emitter-follower is lower than the nominal input impedance of the ring mixer it is necessary to provide the resistor R_{ex}. This causes additional losses, but also provides an additional neutralization of the circuit. The value of the capacitor C is obtained according to equation 1:

$$C = \frac{L}{R^2} = \frac{10^{-6}\ \mathrm{H}}{2500\ \Omega^2} = 0,4 \times 10^{-9}\ \mathrm{F} = 400\ \mathrm{pF}$$

The cutoff frequency obtained using Equation 2 is:

$$f_{co} = \frac{1}{2\pi \times \sqrt{10^{-6}\ \mathrm{H} \times 0,4 \times 10^{-9}\ \mathrm{F}}} = 8 \times 10^{6}\ \mathrm{Hz} = 8\ \mathrm{MHz}.$$

2.2. High-pass filter coupling

If L and C are exchanged in **Figure 1**, the result will be a matching network with high-pass filter characteristics. The given equations remain valid. The cutoff frequency f_{co} is, of course, now the lower cutoff frequency. Since such applications are rare, no calculations are to be made.

2.3. Bandpass filter coupling

It is usually of interest to have a single frequency or a narrow frequency band at the output of the ring mixer (e.g. the intermediate frequency). Of course, this circuit must have as wide a bandwidth as possible so that higher and lower frequencies are terminated correctly. In such cases, a bandpass filter coupling as shown in **Figure 3** will be suitable.

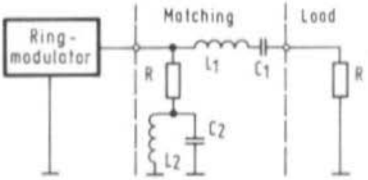

Fig. 3: Bandpass filter coupling between ring mixer and load

Both resonant circuits, the series circuit L_1C_1 and the parallel circuit L_2C_2, should be tuned to the required frequency f_s. The input impedance of the circuit as seen by the mixer is:

$$Z = \frac{1}{\frac{j\omega C_1}{1 + j\omega C_1 (R + j\omega L_1)} + \frac{1 - \omega^2 L_2C_2}{R (1 - \omega^2 L_2C_2) + j\omega L_2}}$$

The condition that R must be provided for all values of ω remains valid. The following equation provides the conditions for this:

$$R^2 = \frac{L_2}{C_1} \times \frac{1 - \omega^2 L_1C_1}{1 - \omega^2 L_2C_2}$$

Since both resonant circuits are tuned to the same frequency (L_1C_1 – L_2C_2), the previous expression can be simplified to:

$$R^2 = \frac{L_2}{C_1} = \frac{L_1}{C_2} \qquad \text{(Equ. 3)}$$

As is the case with all bandpass filters, the center frequency f_s and the bandwidth B can be selected separately. The bandwidth of the described circuit is determined by the Q of series circuit L_1C_1:

$$Q = \frac{2 \pi f_s L_1}{R} \qquad \text{(Equ. 4)}$$

The parallel circuit is of high impedance in the vicinity of its center frequency and therefore not effective. It only serves to compensate for the reactive impedances outside of the passband range.

The following relationship exist between bandwidth and Q:

$$B = \frac{f_s}{Q} \qquad \text{(Equ. 5)}$$

If equations 3 to 5 are combined, the following design equations result:

$$L_1 = \frac{R}{2\pi \times B} \qquad \text{(Equ. 6)} \qquad L_2 = \frac{B \times R}{2\pi \times {f_s}^2} \qquad \text{(Equ. 7)}$$

$$C_1 = \frac{B}{2\pi \times {f_s}^2 \times R} \qquad \text{(Equ. 8)} \qquad C_2 = \frac{1}{2\pi \times B \times R} \qquad \text{(Equ. 9)}$$

Example: The IF-output of a Schottky ring mixer is to be matched to a high-current FET (S = 2 mA/V) in a common-gate circuit. The intermediate frequency is 9 MHz. The required bandwidth is 300 kHz. The ring mixer must be terminated with 50 Ohms at all frequencies.

The values calculated in Equations 6 to 9 are given in **Figure 4.** It will be seen that the parallel resonant circuit has an extremely low L/C ratio. In spite of this, the circuit can be realized in practice. In this example it has been assumed that the input impedance of the FET amounts to 50 Ohms (R_{in} – 1/S). This condition can also be realized in practice; if necessary several identical FET's having a lower slope can be connected in parallel.

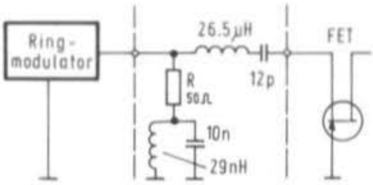

Fig. 4:
Example of a bandpass filter coupling between ring mixer and common-gate FET circuit

All previously discussed matching links represent »ideal« matching networks since they load the ring mixer with the correct impedance over the whole frequency range from DC to infinity. However, this demand is not required in practice since the ring mixer itself only possesses a limited frequency range, and it is satisfactory for the matching to be made only within this range. This limitation then allows components to be matched of a wide frequency range even when they have a parallel capacitance.

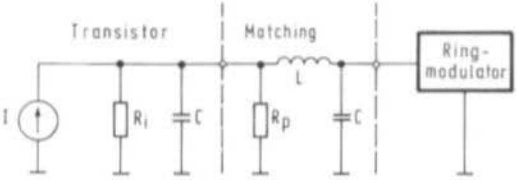

Fig. 5: Matching a power transistor to a ring mixer

2.4. Coupling the output of a transistor to a ring mixer

Schottky ring mixers require considerably more local oscillator power (between 5 and 500 mW according to type) than active mixers. This means that they must be driven by relatively efficient (power) transistors whose system capacitance is rather high. This means that it is not possible to directly connect the output of the transistor to a ring mixer. It is possible, however, to use this unwanted capacitance as part of a low-pass π-filter as shown in **Figure 5.** The value of the parallel resistor R_p is selected so that the nominal impedance of the ring mixer results together with the output impedance R_{out} of the transistor. The input impedance Z of the circuit then coincides to R below the cutoff frequency of the low-pass filter.

When using the following equation for calculating the low-pass π-filter

$$L = \frac{R}{\pi \times f_{co}} \quad \text{und } C = \frac{1}{2\pi \; f_{co} \times R}$$

the following equations are required for designing the matching networks for given values of R, R_{out} and C:

$$R_p = \frac{R_{out} \times R}{R_{out} - R} \quad \text{(Equ. 10)} \qquad L = 2\,R^2\,C \quad \text{(Equ. 11)}$$

The cutoff frequency f_{co} is:

$$f_{co} = \frac{1}{2\pi \times RC} \quad \text{(Equ. 12)}$$

Example: A local oscillator output stage is to be designed for driving a high-level Schottky ring mixer. This stage must be able to provide a level of + 23 dBm (– 200 mW) in the frequency range of 5 MHz to 300 MHz and a termination of 50 Ohms throughout this range.

As can be seen in **Figure 5,** the load of the transistor is formed by the parallel connection of R_p and the input impedance of the ring mixer. This amounts to approximately 50 Ω / 2 = 25 Ω. Since the RF-power is distributed equally to both loads, the transistor must produce an output power of 400 mW. This means that the output RF-voltage at the collector will be:

$$U_c = \sqrt{P_{tot} \times R_{tot}} = \sqrt{0,4\ W \times 25\ \Omega} = 3,16\ V\ (rms)$$

The collector RF-current is therefore:

$$J_c = \frac{U_c}{R_{tot}} = \frac{3,16\ V}{25\ \Omega} = 0,126\ A\ (rms)$$

The peak values of the collector voltage ($\hat{U}_C$) and current ($\hat{I}_C$) are higher to the value of factor $\sqrt{2} \approx 1.4$. This means:

$$\hat{U}_C = 3.16\ V \times 1.4 = 4.42\ V$$
$$\hat{I}_C = 126\ mA \times 1.4 = 178\ mA.$$

This determines the DC-operating point of the transistor:

U_{CE} = 10 V (residual voltage)
I_C = 250 mA

Since the upper frequency limit can be in the order of 100 MHz, the transit frequency of the transistor should be at least 400 MHz. A transistor 2 N 3375 was selected and the circuit diagram is given in **Figure 6.**

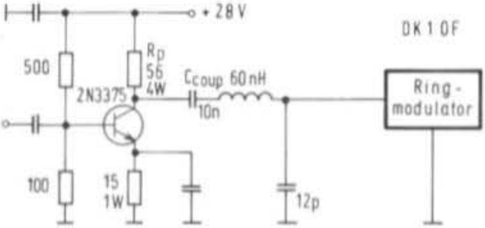

Fig. 6: Final amplifier of a local oscillator chain for a high-level ring mixer

The following values are given in the data sheet of the transistor for I_C = 250 mA and f = 100 MHz:

C = 12 pF
R_{out} = 500 Ω
f_T = 400 MHz

The following results according to Equations 10 and 11:

$$R_p = \frac{R_{out} \times R}{R_{out} - R} = \frac{50\ \Omega \times 500\ \Omega}{500\ \Omega - 50\ \Omega} = 55,6\ \Omega$$

$$L = 2\ R^2 C = 2 \times 50^2 \Omega^2 \times 12 \times 10^{-12}\ F = 60 \times 10^{-9}\ H = 60\ nH.$$

According to Equation 12, the cutoff frequency of the circuit is:

$$f_{co} = \frac{1}{2\pi RC} = \frac{1}{6,28 \times 50\ \Omega \times 12 \times 10^{-12}\ F} = 2,65 \times 10^8\ Hz = 265\ MHz.$$

The coupling capacitor C_{coup} is required for DC-blocking. Its reactive impedance should be low with respect to 50 Ω at the lowest frequency of interest. With $X_{C\ coup} = 5\ \Omega$ and $f = 5$ MHz, the following will result:

$$C_{coup} = \frac{1}{2\pi\ 5 \times 10^6 \times 5\ \Omega} = 6,4\ nF.$$

3. REFERENCES

(1) M.Martin: Empfängereingangsteil mit großem Dynamikbereich und sehr geringen Intermodulationsverzerrungen. CQ-DL 1975, Edition 6, pages 326 - 336.

ATV INFORMATION

by J. Grimm, DJ 6 PI

The ATV transmitter described by DJ 4 LB in (1) was easy to build and gave a big boost to the ATV mode. A vestigial sideband filter is to be described in this article which is to be followed by further information on ATV techniques in one of the following editions of VHF COMMUNICATIONS.

1. VESTIGIAL SIDEBAND FILTER

1.1 Postal regulations

According to the postal regulations, the video and sound signals must not exceed the frequency ranges of 430 MHz to 440 MHz or 1250 MHz to 1260 MHz.

CCIR Standard B is usually used for ATV transmissions, and the following frequencies have been standardized:

Video carrier	434.25 MHz or 1252.5 MHz
Sound carrier	439.75 MHz or 1258.0 MHz

1.2. Frequency spectrum of the TV camera

The frequency spectrum at the composite video output of the TV-camera is from 0 MHz to 5 MHz **(Fig.1)**. The upper frequency limit varies considerably between cameras, and some cheaper cameras do not go higher than 3.5 MHz.

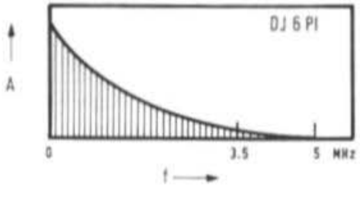

Fig. 1:
Mean amplitude distribution of the composite video signal of a TV-camera

1.3. Frequency spectrum after the video modulator

The amplitude modulation of the video carrier doubles the video bandwidth (upper and lower sidebands), immaterial whether low-level (IF) or high level amplitude modulation is used **(Fig.2)**.

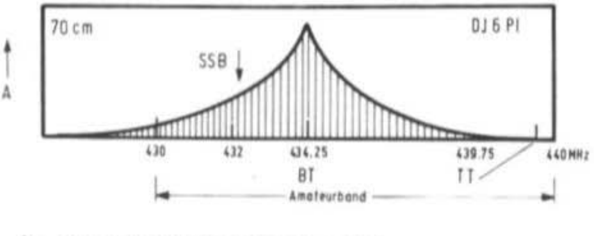

Fig. 2:
Unfiltered spectrum of an ATV-signal in the 70 cm Band

This means that it is possible to exceed the band limits of the 70 cm band, as well as to cause interference to the communications band just under the video carrier. The video information will be heard as a wideband, interference type signal.

In the case of the 23 cm band, part of the lower sideband is bound to be outside of the amateur band.

1.4. Bandwidth requirements of CCIR-standard B

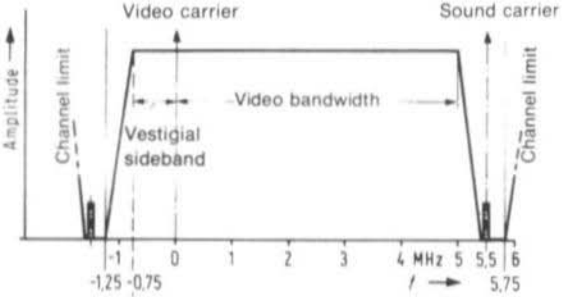

Fig. 3: Amplitude characteristics of a TV-signal according to CCIR-B

Due to the passband curve of the TV-receiver (Nyquist slope), the lower sideband signal must be transmitted at full amplitude up to 0.75 MHz below the video carrier, should then fall at a constant rate and disappear completely 1.25 MHz below the video carrier. At frequencies higher than the video carrier, the upper video sideband will be 5 MHz in bandwidth, and the sound carrier is to be found 5.5 MHz above the video carrier.

1.5. Realization of CCIR-Standard B

1.5.1. Limiting the video bandwidth to 5 MHz

Cheaper TV-cameras have a bandwidth of about 3.5 MHz, but some frequency components of more than 5 MHz can also be present. A 5.5 MHz trap should be provided at the input of the video modulator to ensure that no video signal can appear in the sound channel.

Such an absorption circuit is given in **Figure 4**. It is easy to construct and can be aligned with the aid of a dipmeter.

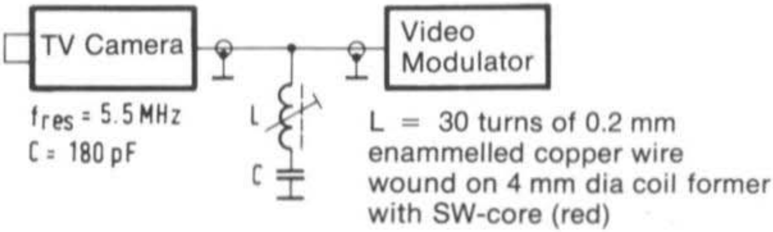

Fig. 4: Trap for the sound carrier (5.5 MHz)

1.5.2. Vestigial sideband filter

In order to ensure that the transmitted ATV-signal conforms to CCIR-Standard B, it is necessary to suppress the lower (vestigial sideband) in one of the following ways:

a) Suitable alignment of the UHF circuits of the 70 cm transmitter. This is necessary both for low-level and high-level modulation, but is difficult to realize in practice.

b) Active LC-filtering at IF level, which is only possible when modulating at IF (low-level).

c) Passive LC-filtering at IF level, also only possible for modulation at IF-level.

A passive LC-filter as in c) was selected in order to ensure that no unwanted frequency products were generated due to non-linearities of the active elements. An acceptable compromise between reflection factor, stopband attenuation, and extent of circuitry to obtain the required slope is provided by a Cauer Low-pass filter (2). The method of calculation is also given in (2). The passband and stopband characteristics of this filter are given (not to scale) in **Figure 5.**

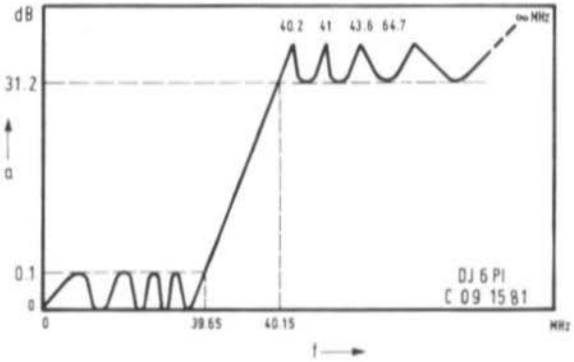

Fig. 5: Calculated characteristics of a Cauer low-pass filter

The filter slope conforms to CCIR-Standard B; the maximum insertion loss (passband) is 0.1 dB, and the minimum stopband attenuation is 31.2 dB; these are calculated values. Input and output impedance is 60 Ω.

Only orientation values can be given for the components. The preliminary alignment of the resonant circuits to the frequencies given in **Figures 5 and 6** can be made with the aid of a dipmeter. The capacitance values are selected so that the calculated value is obtained using a trimmer and fixed capacitor. All coils are wound with 1 mm diameter, silver plated or enamelled copper wire.

L 2: 9.5 turns, on a 5 mm coilformer, green core
L 4: 6 turns, 4 mm dia., self-supporting
L 6: 3.5 turns, 4 mm dia., self-supporting
L 8: 6 turns, 4 mm dia., self-supporting

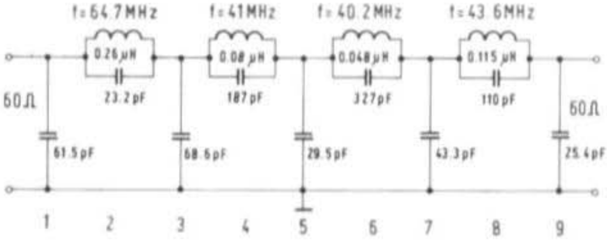

Fig. 6: Circuit diagram of the Cauer low-pass filter

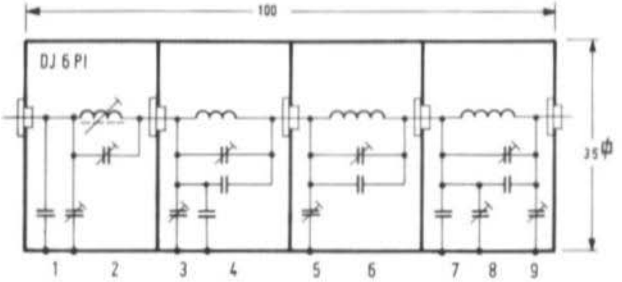

Fig. 7: Construction of the low-pass filter

The box can be made from brass plate or PC-board material. The intermediate panels are cut from thin brass plate; the feedthroughs (not feedthrough capacitors) are located at the center of these panels. A sweep measuring system is required for the final alignment **(Figure 8)**. Any TV-wobbulator (sweep generator and oscilloscope) can be used. The alignment requires some patience, since it is necessary to align all elements alternately in order to obtain the required passband curve. **Figure 9** shows the characteristics of an aligned filter (not to scale).

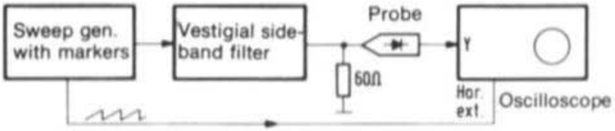

Fig. 8: Alignment set-up

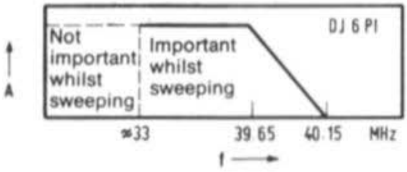

Fig. 9: Nominal passband curve of the sideband filter

The filter should be placed into circuit between the video/sound combining circuit (DJ 4 LB 001) and the input of the UHF-mixer (DJ 4 LB 004).

1.5.3. Alignment of the Mixer and Linear Amplifier (DJ 4 LB 004)

Of course, the UHF module can be aligned by trial and error but its performance can be improved considerably using a sweep-frequency system. The TV sweep generator is connected to the IF-input of the module (Pt 402) and the UHF-probe of the oscilloscope to a terminating resistor at the UHF-output (Pt 405). Simple probes are not suitable for UHF use but provide a sufficiently good indication of the characteristic curve. Most probes will provide relatively constant characteristics (linear or not linear) within the frequency range of 430 MHz to 440 MHz. Module DJ 4 LB 005 can also be used as demodulator for the oscilloscope. The passband curve given in (1) should be achieved.

Further articles on ATV are to appear in one of the next editions of VHF COMMUNICATIONS.

2. REFERENCES

(1) G. Sattler: A Modular ATV transmitter
VHF COMMUNICATIONS (5), Edition 1/1973, Pages 2 - 15
VHF COMMUNICATIONS (5), Edition 2/1973, Pages 66 - 80

(2) Prof. Saal: Der Entwurf von Filtern mit Hilfe des Katalogs: Normierte Tiefpässe
Telefunken, Backnang, W. Germany.

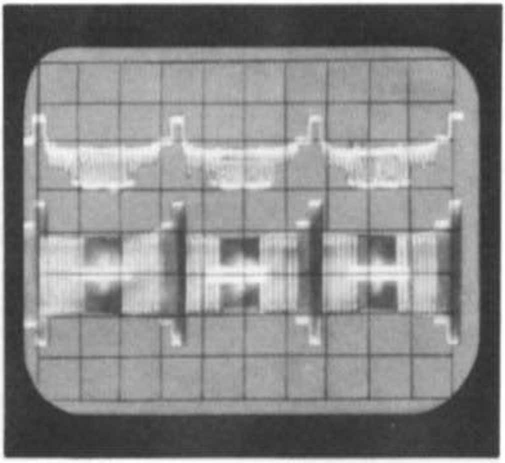

FM - HANDHELD - TRANSCEIVER FOR THE 2-m-BAND

by R. Tellert, DC 3 NT

A handheld FM transceiver is to be described that provides a total of 33 receive and 22 transmit channels in the 2 m band using frequency synthesis with only 5 crystals. The receiver can be switched from repeater output to repeater input at the touch of a switch. The transceiver comprises a BFO for netting, 1750 Hz calling tone oscillator, fine tuning (RIT) for the receiver of + 30 kHz and provides an output power of at least 1.5 W at an operating voltage of approximately 13 V. The audio output power of 2 W is sufficient for mobile use. A built-in loudspeaker is also provided. The chassis and case were homemade; the overall dimensions of the author's prototype are 220 mm by 95 mm by 58 mm. The weight of the transceiver with built-in NiCd-accumulator (15 V / 225 mAh) amounts to 1125g. A photograph of the author's prototype is given in **Figure 1**.

Fig. 1: One of the transceivers from the second prototype series

The most important specifications are as follows:

Receiver

Number of channels:	33 channels with a spacing of 25 kHz using only 3 crystals
Sensitivity:	0.35 uV for 20 dB S/N ratio
The suppression of spurious reception ± 300 kHz from selected channel:	> 60 dB
Image rejection:	> 75 dB
Bandwidth of the second IF:	15 kHz
Current drain in standby mode:	33 mA

Transmitter

Number of channels: 22 channels with a channel spacing of 25 kHz using only 2 crystals
Output power: 2 W at 13.5 V
The suppression of spurious signals: > 60 dB
Modulation characteristics: 300 Hz to 3 kHz with a preemphasis of approx. 6 dB/octave
Current drain: approx. 350 mA

The described transceiver is the result of further development of the original prototype series which have improved it electrically, and have improved the reproduceability and ease of construction. The first series of four units manufactured as a club project worked immediately after construction. A further 13 pieces are now being constructed for other club members. There are a few important points which should be noted, however, which will be given in the following description.

1. DETAILS OF THE RECEIVER CIRCUIT

The receiver **(Figure 2)** is double conversion superhet having a first IF of 10.575 to 10.825 MHz and a second IF of 455 kHz. The first local oscillator comprising (T 3) is crystal controlled; the three switchable crystals of this oscillator operate at a third of the required local oscillator frequency and determine the receive frequency ranges. The frequency spacing of these crystals at the local oscillator frequency amounts to 250 kHz, which provides a range of 11 channels having a spacing of 25 kHz. The second oscillator (part of I 1) operates in conjunction with inductor L 10 and can be switched from 10.120 to 10.370 in 11 steps of 250 kHz with the aid of the channel switch S 2 and 11 trimmer capacitors. This means that 33 receive channels result (3 x 11 = 33).

A spindle trimmer capacitor (C 35) of 6 pF is used for fine tuning. A contact on the transmit receive relais Rel 1 connects a further trimmer (C 36 or C 37) in the transmit mode which compensates for the frequency spacing between transmitter and receiver (IF). This is because the same oscillator is also used in the transmit mode. The transmit signal is frequency modulated using the varactor diode D 1 which is coupled to the resonant circuit of the oscillator.

It is mainly the stability of this oscillator and its resetability on switching channels that determines the quality of this transceiver. The great advantage of this system is that it requires only a very small number of crystals. The two most important fixed capacitors C 40 and C 41, are styroflex capacitors having a working voltage of 100 V or more. In the case of all previously constructed transceivers, the frequency does not vary by more than 1 kHz after switching on, and the temperature dependence is in the order of + 300 Hz/°C.

Two VHF preamplifier stages (T 12 and T 1), two bandpass filters, and a resonant circuit are provided in front of the mixer (T 2) which provide a very good ultimate selectivity and image rejection. The VHF bandwidth amounts to approximately 0.8 MHz, which means that SSB-signals in the lower part of the band will be slightly suppressed. The first three transistors are silicon-PNP-types (BF 324), which has the advantage that the cold ends of the collector circuits are grounded. It would be possible for germanium-transistors such as AF 106 or AF 139/239 to be used here, however, no attempts were made in this direction. The second stage (T 1) possesses a little feedback due to the low value of the base by-pass capacitor (220 pF). This is provided to compensate for the losses in the bandpass filter.

The selectivity in the first IF in the order of 10.7 MHz is provided using two resonant circuits (L 5, L 6) and a ceramic filter F 1. The required signal is not amplified, but it is fed directly to the second mixer which is accommodated together with the second oscillator in the integrated circuit I 1 (TBA 120).

The selectivity in the second IF of 455 kHz is provided by the ceramic filter F 2 having a bandwidth of 15 kHz. The ultimate selectivity of the used filter type only amounts to approximately 45 dB. If this is not sufficient, an additional LC-circuit (L 14), which is shown within dashed lines in the circuit diagram given in **Figure 2**, can be added.

The necessity of this additional resonant circuit will be seen if a signal spaced 50 - 200 kHz from the selected frequency is strong enough to drive the wideband amplifier I 2 and open the squelch.

A special feature is provided in the power supply of the two integrated circuits I 1 and I 2: Since each of these integrated circuits required 15 to 18 mA at 12 V, but are able to operate successfully at 6 V, they have been connected in series with respect to the operating voltage. This means that both integrated circuits only require a power of 12 V and 12 mA.

The beat frequency oscillator (BFO) is mainly used to adjust the received frequency to the exact center frequency of the channel (zero beat). The transistor T 6 oscillates in conjunction with the 455 kHz resonant circuit comprising C 49 - C 51 / L 12 and is very loosely inductively-coupled to the discriminator L 11. This loose coupling ensures that the frequency is not pulled. The BFO is switched on together with the calling-tone-oscillator with the aid of switch S 4 (Pt 9 - Pt 20 - Pt 10). The calling tone has no effect in the receive mode, and BFO does not interfere in the transmit mode. The advantage of this is that only one push button switch is required for both modes: the frequency spacing from the opened repeater will be observed immediately in the receive mode and the BFO can be switched off after the receiver has been adjusted to the correct frequency.

The AF-signal is fed via the potentiometer P 2 to the AF amplifier, as well as potentiometer P 3 and a highpass filter to the squelch circuit. The highpass filter is mainly provided so that only the high-frequency noise components are passed. Diode D 2 shifts the DC voltage at the base of T 8 in a negative direction when only noise voltages are present so that the mean value of the DC-voltage and the noise voltage become more positive at the collector. This signal closes transistor T 11 with the aid of the rectification by Diode D 3.

The operational amplifier I 3 is provided as AF amplifier, which feeds the complementary transistor T 9 - T 10. Half the operating voltage is present at the output if I 3, as well as at the interconnected emitters of the output stage so that the output transistors operate in class C without bias. Due to the feedback via the RC-link R 29 / C 71, and due to the low voltage of the germanium transistors (approx. 150 mV), the distortion factor remain low inspite of the class C conditions. The advantage is the very low current of approx. 2 mA.

2. CIRCUIT DESCRIPTION OF THE TRANSMITTER

The circuit diagram of the transmitter is given in **Figure 3**. The transmit signal results by mixing the VFO signal (10.120 to 10.370 MHz in 11 steps of 25 kHz) obtained from the receive board with a crystal-controlled signal of 134.880 or 135.2058 MHz. This allows 2 x 11 = 22 transmit channels to be obtained. The two crystals (Q 4 and Q 5) oscillate at one third of the required frequency, in other words in the 45 MHz range. The crystal oscillator (T 101) is built up in a similar manner to the first local oscillator of the receiver. A somewhat higher output power is obtained by using a smaller emitter resistor.

The crystal frequency is tripled in transistor T 102, passed through the bandpass filter and resonant circuit for selectivity. The VFO voltage is amplified, filtered in the resonant circuit L 105 - C 112 - C 114, separated into two antiphase signals (180°) and fed to the push-pull mixer.

Resistor R 107 limits the VFO signal together with the low collector current of T 104 in order to ensure that the mixer is not overdriven. Resistor R 150 in the 135 MHz circuit is provided for the same reason.

The push-pull mixer comprising T 105 - T 106 is not provided with external balancing since this would require additional measuring equipment. Measurements have shown that the resonant circuit L 106 can have such a high Q, which can cause the voltage gain to be too high and cause limiting. This, in turn, will cause spurious signals and harmonics. Resistor R 151 has been provided to avoid this.

A four-stage selective amplifier is provided after the mixer, which amplifies the required signal to approx. 1.5 W output. An harmonic filter is provided at the output in addition to the required impedance transformation circuit.

2.1. Modulator

The modulator consists of transistor T 113 and the operational amplifier I 4. The RC-values are been selected so that a reduction of the lower frequencies and a preamphasis of the higher frequencies takes place. This is also to compensate for the reduction in gain of the operational amplifier at higher frequencies. The gain is high enough that the integrated circuit will limit the AF voltage. The harmonics generated during the limiting process are suppressed in the subsequent RC links sufficiently so that no interference appears in the adjacent channel. The bias voltage for the varactor diode D 1 is provided by the voltage stabilizer via Pt 111 and the voltage divider comprising R 140 / R 142. The sensitivity must be adjusted according to the microphone, and potentiometer P 101 is provided for this. The maximum frequency deviation can be adjusted on potentiometer P 102.

2.2 1750-Hz-Calling tone

The calling tone oscillator is accommodated on the receiver board, and the circuit is given in **Figure 2**. Transistor T 7 operates as a RC-oscillator; frequency and amplitude are adjustable. If the oscillator should not commence operation immediately, this will mean that the gain of transistor T 7 is too low. In this case, the value of resistor R 17 should be decreased to 39 or 27 Ohm. However, it is not advisable for the value of this feedback resistor to be always this low since the oscillator will provide a distorted voltage if the gain is too high. The calling tone oscillator is switched on together with the BFO.

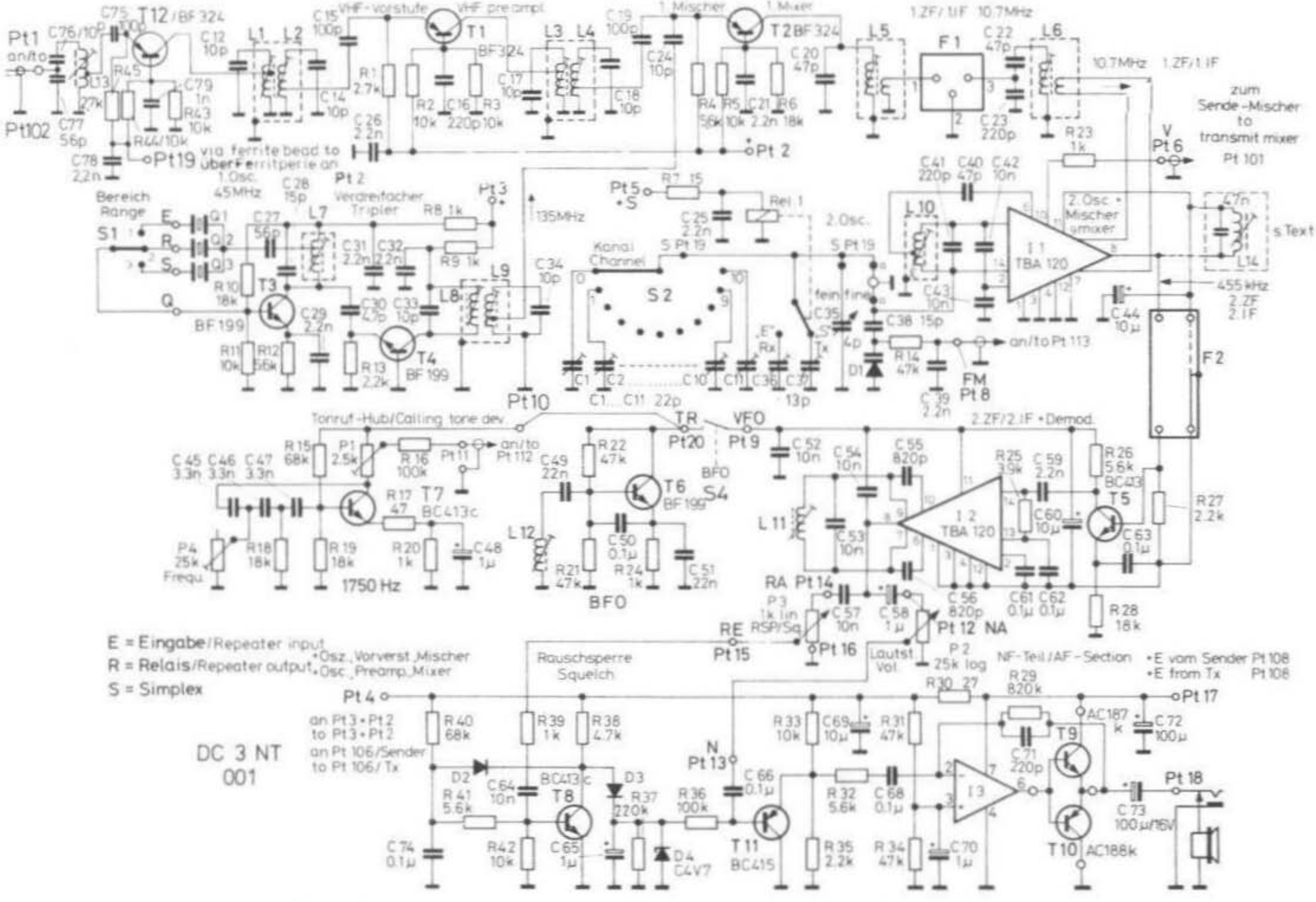

Fig. 2: Circuit diagram of the receive module and the calling-tone oscillator

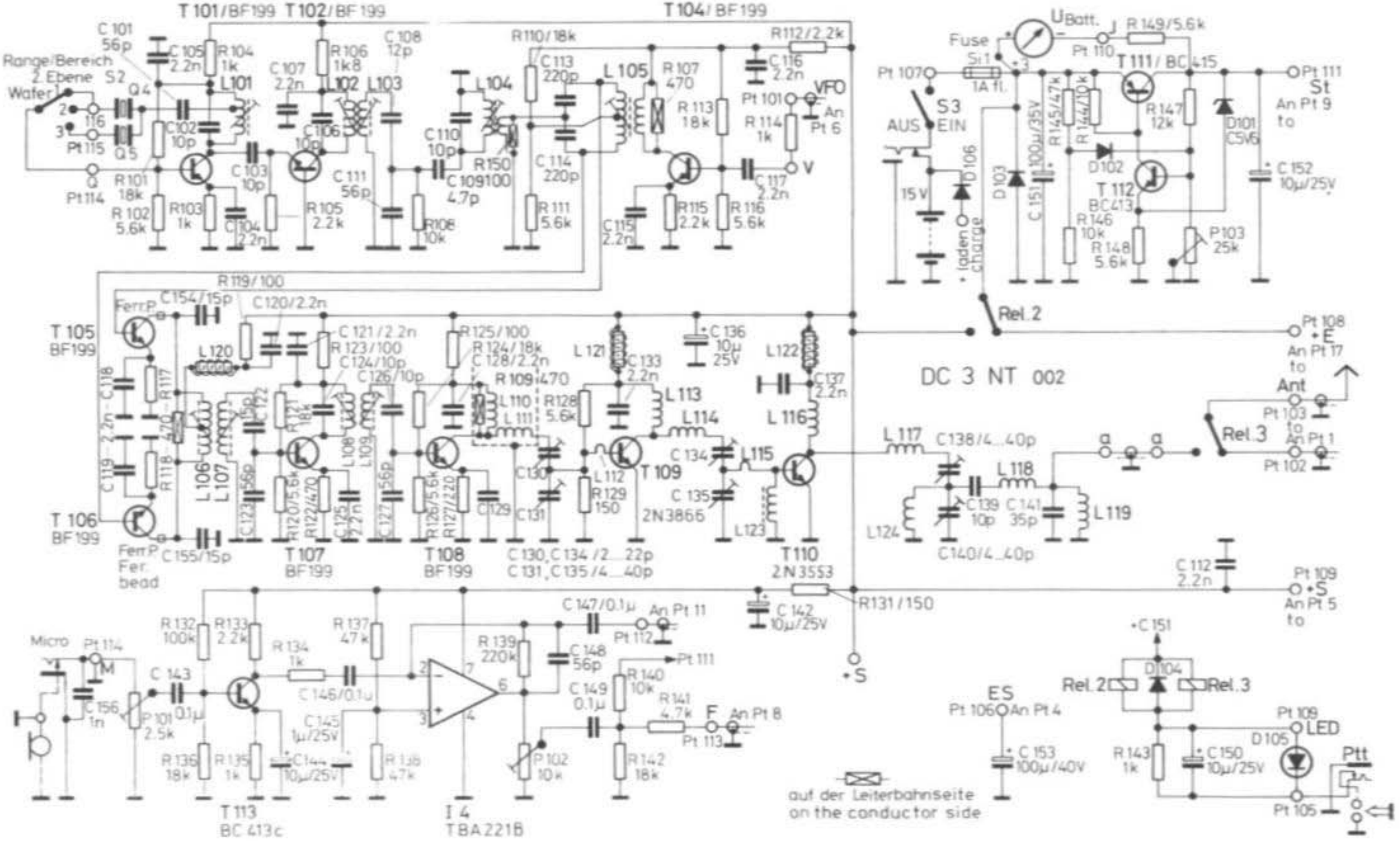

Fig. 3: Circuit diagram of the transmit module and voltage stabilizer circuits

3. OTHER PARTS OF THE CIRCUIT

The voltage stabilizer is also accommodated on the transmit board (see **Figure 3**). Transistor T 111 is a PNP-type; the unstabilized voltage is fed to the emitter. This circuit has the advantage that a difference voltage of approx. 0.2 V between input and output voltage will still be controlled. Even when the control circuit is no longer be able to operate at fairly low battery voltages, the voltage difference will still not be more than 0.2 V. The voltage divider comprising R 145 / R 146 and the diode D 102 switch on the voltage stabilizer. As soon as the output voltage is more than approx. 3 V this will block diode D 102.

The battery-check meter measures the difference between the input voltage and the stabilized output voltage. This ensures that the voltage range of interest is spread over the scale of the meter without a zener diode been required. The full scale deflection (approx. 15 V) is adjusted with resistor R 149.

The transceiver is provided with 3 relays: Rel 1 switches the frequency correction of the VFO between transmit and receive; Rel 2 switches the operating voltage between transmit and receive (it is only the VFO and the second IF amplifier that remain connected to the stabilized voltage). Rel 3 switches the antenna between transmitter and receiver, and its energizing coil is connected in parallel with that of relay Rel 2. The LED D 105 is connected in series with these energizing coils to indicate the transmit mode. In order to ensure that all energizing coils obtain the full operating voltage for energizing, the LED is bridged by C 150. The relay current will charge C 150 up to the threshold voltage of the LED. The relays will not become deenergized – since the voltage required for holding the relais is always far lower than the voltage required for energizing it. This circuit ensures that the current required by the LED will not load the accumulators. The electrolytic capacitor C 153 is accommodated on the transmit board for space reasons. This capacitor is used for filtering the operating voltage of the VHF preamplifier stages.

4. COMPONENTS

4.1. Receiver

T 1, T 2, T 12:	BF 324 (Siemens, Philips)
T 3, T 4, T 6:	BF 199 (Siemens) or BF 224 (TI)
T 5, T 7, T 8:	BC 413 (Siemens) or BC 108
T 9:	AC 187 K or AC 175
T 10:	AC 188 K or AC 117
T 11:	BC 415 C (Siemens) or BC 308 C
D 1:	BA 138 (approx. 11 pF / 4 V, Siemens) or BB 105
D 2, D 3:	1 N 4448 or similar silicon diode
D 4:	C 4 V 7 zener diode
I 1, I 2:	TBA 120 (not TBA 120 S !)
I 3:	TBA 221 B or 741 CM
F 1:	SFE 10, 7 MA (Murata)
F 2:	CFM 455 E (Murata)
Q 1:	44.808 MHz HC-18/U (or HC-25/U)
Q 2:	45.008 MHz HC-18/U (or HC-25/U)
Q 3:	44.9166 MHz HC-18/U (or HC-25/U)

Inductance	Turns	Wire enam.copper	Direction of winding	Tap from cold end	Facing board
L 1, L 3	4.25	0.8 mm	left	3	end
L 2	4.25	0.8 mm	left	1	start
L 4	4.25	0.8 mm	right	1	start
L 5	35	0.1 mm	-	coupling: 12 / 0.1	-
L 6	40	0.1 mm	-	coupling: 6 / 0.1	-
L 7, L 10	15	0.25 mm	right	5	start
L 8	4.75	0.8 mm	right	-	start
L 9	4.75	0.8 mm	left	2	end
L 11, L 12	60	0.1 mm	right	-	start
L 13	5.2	0.8 mm	left	0.8	start
L 14	30 - 40	0.1 mm	-	-	-

Coil formers: 4.2 mm diameter, 14 mm long, SW-core (red) with the exception of L 13: VHF-core (brown)

C 1 - C 11: 22 pF plastic foil trimmer 7 dia. (Philips, Dau)
C 20, C 22, C 40: 47 pF Styroflex (Siemens)
C 23, C 41, C 71: 220 pF Styroflex (Siemens)
C 35: approx. 4 pF ceramic spindle trimmer (Philips)
C 36, C 37: 13 pF (or 22 pF) plastic foil trimmer dia. 7 mm (Philips, Dau)
C 55, C 56: 820 pF Styroflex (Siemens)

Ceramic disc capacitors should be used for all other pF and nF values.

C 50, C 61 - C 63, C 66, C 68, C 74: 0.1 µF plastic foil capacitor, spacing 7.5 mm
C 72: 100 µF / 25 V aluminium electrolytic
C 73: 100 µF / 16 V, max. 8 mm diameter

Tantalum drop type electrolytics should be used for all other values.

P 1: 2.5 kOhm trimmer potentiometer, spacing 5/10 mm
P 2: 25 kOhm log. miniature potentiometer
P 3: 1 kOhm lin. miniature potentiometer
P 4: 25 kOhm trimmer potentiometer, spacing 5/10 mm

S 1: 2 wafers, 3 contacts miniature rotary switch (Elma)
S 2: 1 wafers, 11 contacts miniature rotary switch (Elma)

Rel 1 ... Rel 3: RS - 12 V or RH - 12 V (National)

4.2. Transmitter

T 101, T 102, T 104 - T 108: BF 199 (Siemens)
T 103, T 112: BC 413 B or C (Siemens) or BC 109 C
T 109: 2 N 3866
T 110: 2 N 3553
T 111: BC 415 (Siemens) or BC 308 C

D 101: C 5 V 6 zener-diode
D 102, D 104: 1 N 4148 or similar Silicon diode
D 103: 1 N 4003 or similar rectifier diode
D 105: LED

I 4: TBA 221 B or 741 CM

Q 4: 44.960 MHz HC-18/U (or HC-25/U)
Q 5: 45.06833 MHz HC-18/U (or HC-25/U)

C 113, C 114: 220 pF Styroflex (Siemens)
C 130, C 134: 22 pF plastic foil trimmer, 7 mm dia. (Philips, Dau)
C 131, C 135, C 138, C 140: 40 pF plastic foil or ceramic trimmer

Ceramic disc capacitors, 5 mm spacing for all other pF and nF values.

C 143, C 146, C 147, C 149: 0.1 μF plastic foil capacitors, spacing 7.5 mm
C 151, C 153: 100 μF / 25 V aluminium electrolytics

Drop-type tantalum electrolytics for all other uF-values.

Inductance	Turns	Wire enam.copper	Direction of winding	Tap from cold end	Facing board
L 101	15	0.25 mm	right	5	start
L 102	4.75	0.8 mm	right	-	-
L 103	4.75	0.8 mm	right	-	-
L 104	4.2	0.8 mm	right	coupling 0.8 t 0.8 mm copper	coupl. below
L 105	22/coupl.25	0.1	right	11	coupl. above spacing 1.5 mm
L 106	4.6	0.8 mm	right	2.3	-
L 107	3.75	0.8 mm	right	-	-
L 108	4.2	0.8 mm	left	-	-
L 109	4.5	0.8 mm	right	-	-
L 110 L 111 L 113 L 114 L 116	4	0.8 mm	left	-	4.2 mm former
L 112	1.2	0.8 mm	right	-	4.2 mm former
L 115	2.6	0.8 mm	left	-	3 mm former
L 117	2.6	1.3 mm	left	-	8 mm former
L 118	7	0.8 mm	right	-	4.2 mm former
L 119	3	0.8 mm	right	-	4.2 mm former
L 120 - L 123	10 - 12	0.25 mm	on resistor 1 kOhm / 0.5 W		
L 124	5	0.8 mm	right	-	3 mm former

P 101: 2.5 kOhm trimmer potentiometer, spacing 5/10 mm
P 102: 10 kOhm trimmer potentiometer, spacing 5/10 mm
P 103: 25 kOhm trimmer potentiometer, spacing 5/10 mm

Si 1 microfuse 1 A with holder (Wickmann)

Further details regarding the PC-boards, component locations, construction and alignment are to be brought in the second part of this article in one of the next editions of VHF COMMUNICATIONS.

A NUMERICAL INDICATION SYSTEM

Part II

by K. Wilk, DC 6 YF

The principal of operation of this numerical indication system was described in part I (1). The system is now to be described in more detail together with the block diagram given in **Figure 1**, and the individual modules discussed (**Figures 2, 3, 5 and 6**). The complete system comprises the following functional groups:

1. Pulse Generator
2. Horizontal and vertical deflection
3. Formation of the individual image segments
4. Recoding
5. Segment selection
6. Selection switches
7. Video signal synthesis
8. Power supply

With the exception of the power supply, these groups are accommodated on the following printed circuit boards:

DC 6 YF 008: Pulse generator and video signal synthesizer (1 and 7)
DC 6 YF 009: Selector switches (6)
DC 6 YF 010: Numerical generator (2, 3, 4 and 5)

A PC-board has not been designed for the simple power supply since this can be constructed as required.

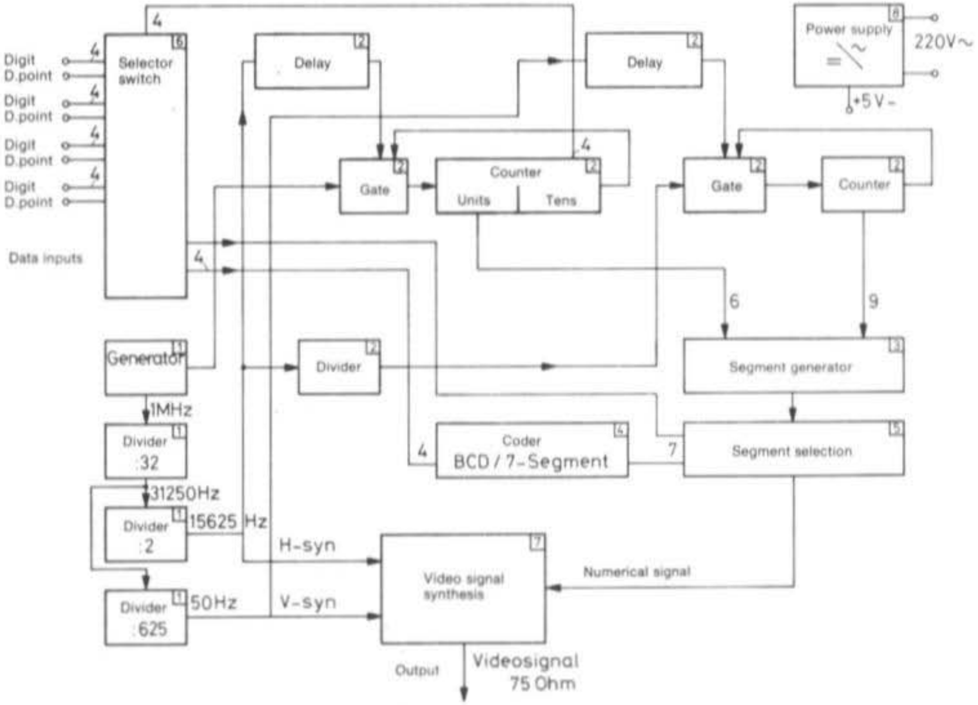

Fig. 1: Diagram of the numerical indication system

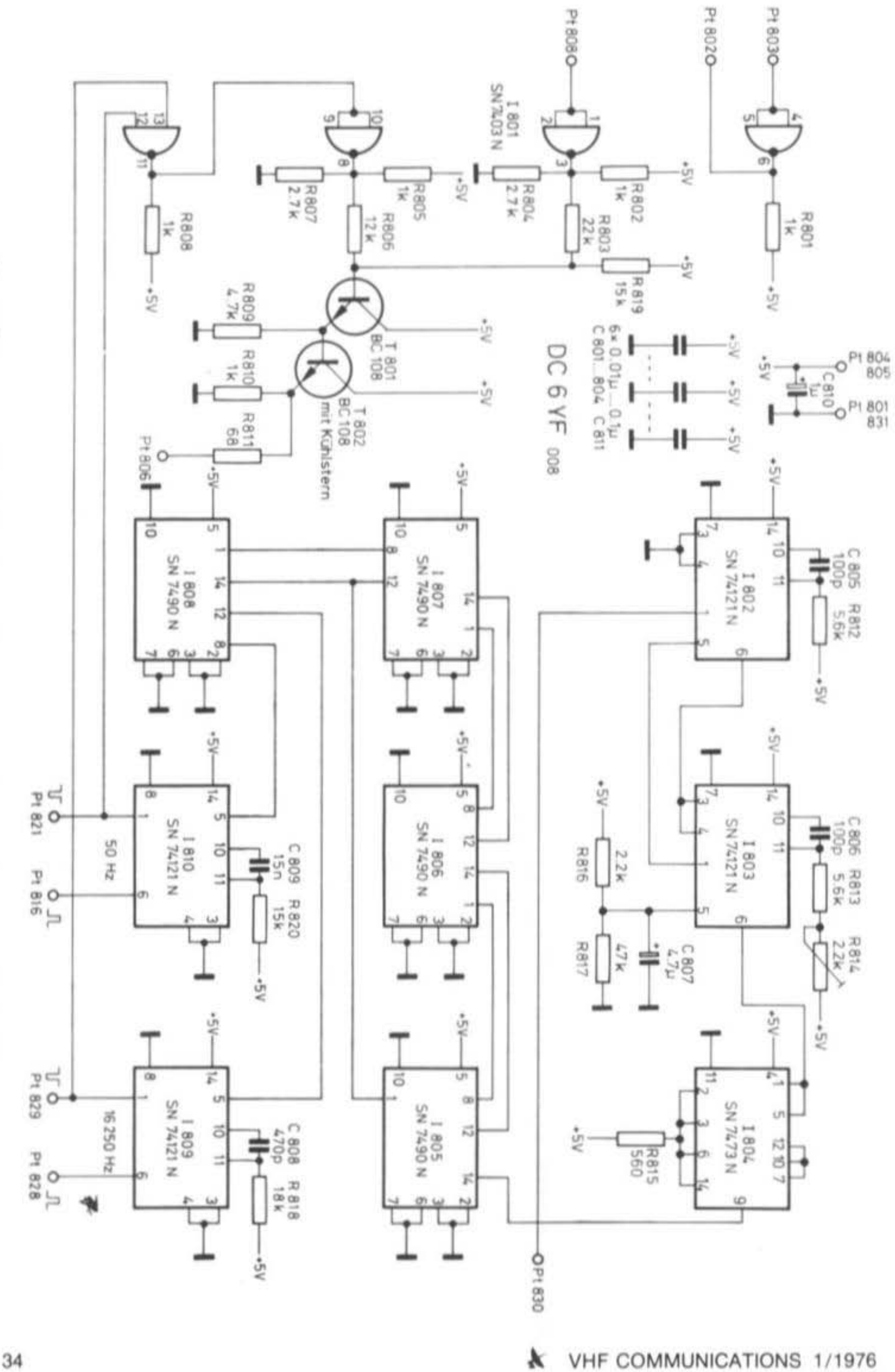

Fig. 2: Circuit diagram of pulse generator and video signal synthesizer (DC 6 YF 008)

1. CIRCUIT DESCRIPTION

1.1 Pulse generator

The blocks designated with 1 in the upper right hand corner in the block diagram given in **Figure 1** are used in the pulse generator. Further details are given in the circuit diagram for PC-board DC 6 YF 008 **(Figure 2)**.

An exact clock generator is formed by the monostable multivibrator I 802 and I 803 which alternately key each other at the end of the monostable state. The output frequency of the clock generator can be adjusted to 1 MHz with the aid of resistor R 814. The clock frequency is the highest frequency present in the system, and all other pulse trains are derived from it. This clock pulse determines the width of a segment in the horizontal plane. The period duration of 1 μs corresponding to 1 MHz results in a segment with of approximately 1/50 of the picture tube width. The clock frequency is firstly divided by 32 in the double-flip-flop I 804 and the decade counters I 805, I 806, I 807 and I 808 to twice the horizontal deflection frequency of 31 250 Hz, and then by two to obtain the horizontal deflection frequency of 15 625 Hz, and then divided by 625 to obtain the vertical deflection frequency of 50 Hz. The monostable multivibrators I 809 and I 810 are used to form the required standardized synchronizing pulses for the horizontal and vertical deflection. These pulses can be taken as positive or negative going pulses and further processed as required.

1.2. Deflection of the video image

The groups designated with 2 in the upper right-hand corner of the block diagram are required for this: (see Figure 1). The circuit diagram of this group is given in module DC 6 YF 010 in **Figure 3.**

The video image is divided into a large number of approximately square fields: the horizontal length of a field is determined by the clock frequency of 1 MHz, whereas the vertical height results from 10 of a total of 312 lines. From this large number of possible squares, it is only a small number at the center of the picture tube that are used for indication of the digits. These fields or segments are numbered from the edge of the picture tube, and the commencement of the count is delayed. After obtaining the required number of fields, the count will be stopped. The following time sequence must be maintained for formation of the segments in the vertical plane:

a) Vertical synchronizing pulse: Reset of the counter.

b) Delay of the count commencement; adjustable and determines the upper edge of the selected fields.

c) Count.

d) Disablement of the count until the next vertical synchronizing pulse appears.

The same time sequences are also valid in the horizontal plane; the above information then is referred to the horizontal synchronizing pulse and the horizontal plane.

In the circuit diagram given in **Figure 3**, the horizontal synchronizing pulses are fed to the decade divider I 1009 via connection point Pt 1029, buffer I 1002a and the gate I 1008c. This determines the height of the segment, since it is only each 10th pulse that is passed via a further gate I 1008b to counter I 1010. After the vertical synchronizing pulse appears, which

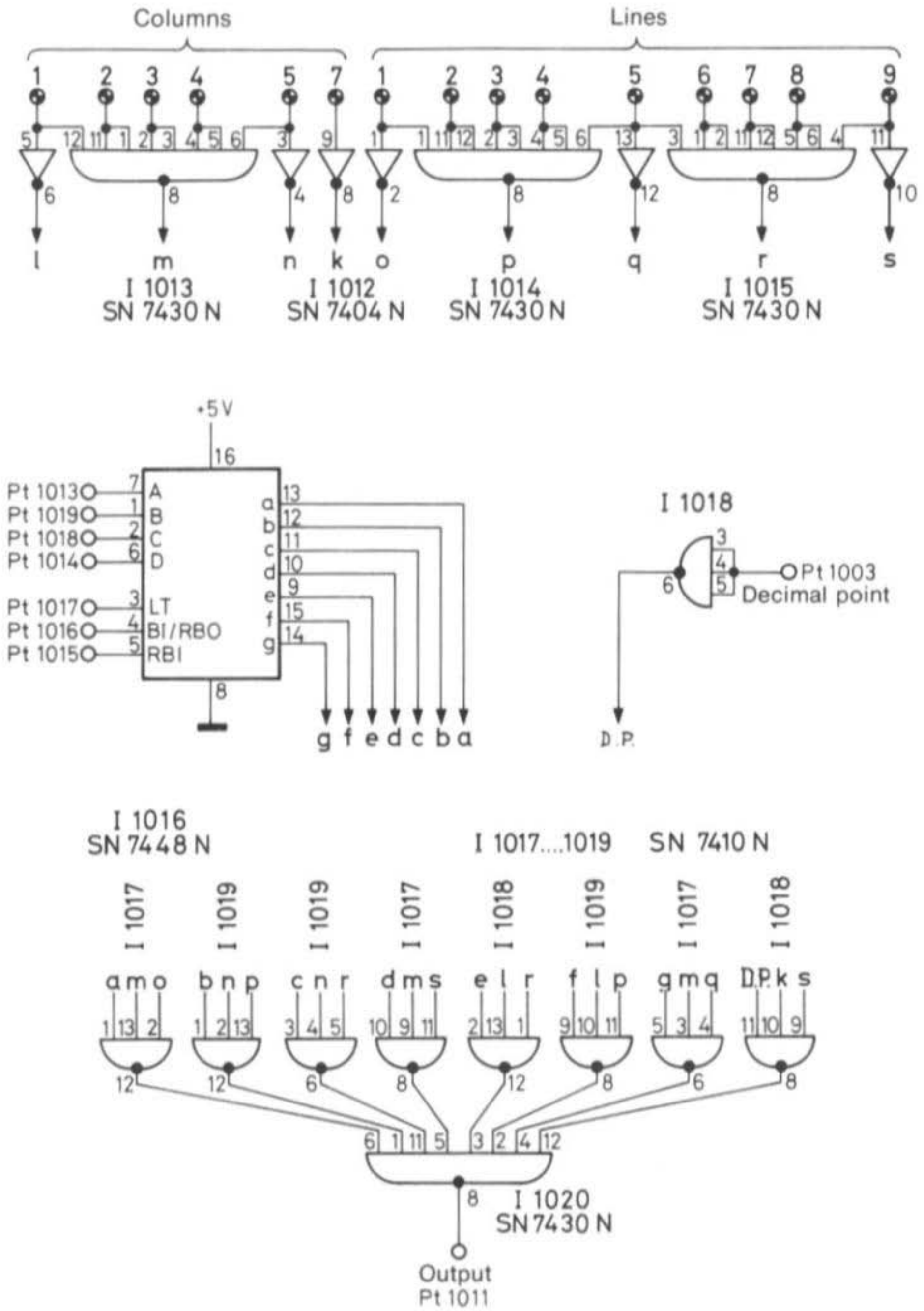

Fig. 3a: Circuit diagram of the numerical generator (DC 6 YF 010)

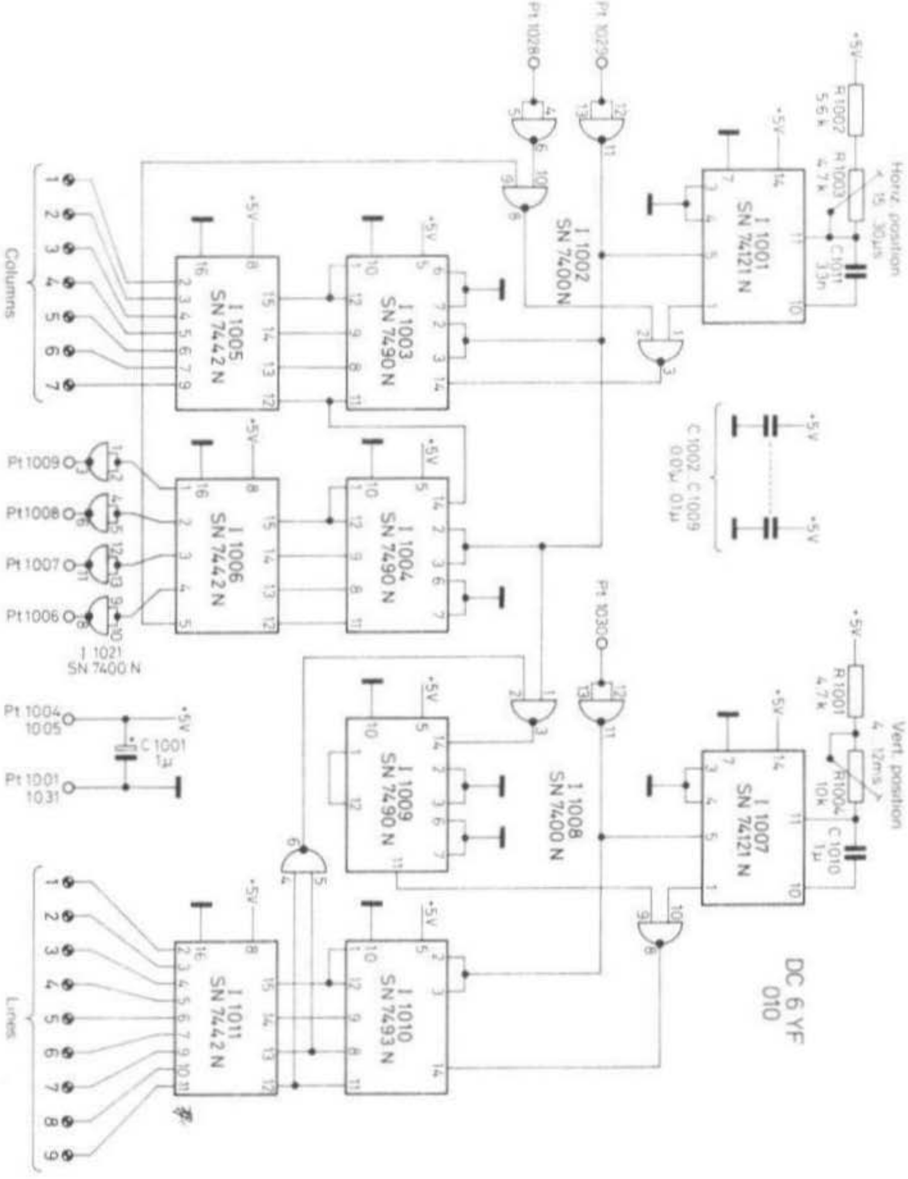

Fig. 3b: Circuit diagram of the numerical generator (DC 6 YF 010)

is fed via Pt 1030 and buffer I 1008a to the reset inputs of clock I 1010, the counter will be reset to 0; this means that a logic I level will be present at the outputs of gate I 1008d, and thus open gate 1008c. At the same time the vertical synchronizing pulse will commence the delay of the monostable multivibrator I 1007, which controls the gate I 1008b via the Q output. It is only after the delay of I 1007 is completed that each 10th horizontal pulse is passed to the counter. This means that the monoflop I 1007 determines the position of the image in the vertical direction. After the 12th pulse is fed to the counter, the horizontal synchronizing pulses are blocked via I 1008d, I 1008c. This means that only a limited number of pulses are fed to the counter, whose BCD values are decoded in the code-converter I 1011. After the blocking period signals are present at the outputs of I 1011 for lines 1 to 9, which will then disappear.

Four lots of seven vertical columns are now generated in a similar manner to the nine horizontal lines. The 1 MHz clock pulses are used instead of the horizontal synchronizing pulses, and the horizontal synchronizing pulses are used instead of the vertical synchronizing pulses. The count is made up to 40, and 10 steps are provided for each of the four adjacent digits. The digits and the decimal points require a total of seven steps, whereas the other three steps form the spacing between the digits. The BCD-signals of the units counter I 1003 are converted into decade signals in the coder circuit I 1005. Signals with the order of 1 to 7 are then available in a sequence at the outputs of I 1005. The output signals of the tens-counter are fed from the outputs Pt 1006 to 1009 to the selector switch for driving the four adjacent numerical signals.

1.3. Formation of the image segments

See the blocks designated with 3 in the upper right hand corner of the block diagram (see Figure 1). The circuit diagram of this module is given in Figure 3 for DC 6 YF 010.

Nine lines and seven columns result in a area of 63 fields for each digit including decimal point (DP). A number of gates are used so that different widths of horizontal and vertical bars result, which are designated with l...s (see **Figure 4**).

The following results from left to right:

l : Narrow vertical bar in column 1
m : Wide vertical bar in columns 1, 2, 3, 4, 5
n : Narrow vertical bar in column 5
k : Narrow vertical bar in column 7 (DP)

From above:

o : Narrow horizontal bar in line 1
p : Wide horizontal bar in lines 1, 2, 3, 4, 5
q : Narrow horizontal bar in line 5
r : Wide horizontal bar in lines 5, 6, 7, 8, 9
s : Narrow horizontal bar in line 9

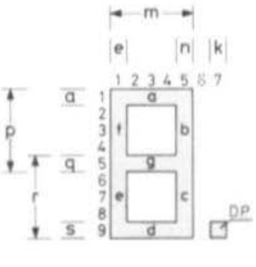

Fig. 4: A 7-segment digit

These bars are generated at the outputs of gates I 1012, I 1013, I 1014 and I 1015. These are used to form the seven segments of the digits and decimal points. They are designated with a - d, or DP. For example, the segment »a« is formed from bars m and o. The AND-configuration used for this comprising gates I 1017, I 1018 and I 1019 are used simultaneously for switching on and switching off the segment.

1.4. Recoding

See the blocks designated with 4 in the block diagram (see Figure 1). The circuit diagram is given in Figure 3 for DC 6 YF 010.

The numerals to be indicated are fed to the data inputs in the form of BCD-code. This code is usually used for data transmission. Digital measuring equipment such as frequency counters, or digital voltmeters usually have BCD-outputs; they can be directly connected to this point. However, since the indication is made in the 7-segment-mode, a code conversion is required which is made in integrated circuit I 1016.

The seven segments are designated with a to g **(Figure 4)**. The following table compares the decimal number (step), BCD-inputs and 7-segment-outputs of the integrated circuit SN 7448 to another.

Step	**BCD - Code**				**7-segment-code**						
	A	**B**	**C**	**D**	**a**	**b**	**c**	**d**	**e**	**f**	**g**
0	0	0	0	0	1	1	1	1	1	1	0
1	1	0	0	0	0	1	1	0	0	0	0
2	0	1	0	0	1	1	0	1	1	0	1
3	1	1	0	0	1	1	1	1	0	0	1
4	0	0	1	0	0	1	1	0	0	1	1
5	1	0	1	0	1	0	1	1	0	1	1
6	0	1	1	0	0	0	1	1	1	1	1
7	1	1	1	0	1	1	1	0	0	0	0
8	0	0	0	1	1	1	1	1	1	1	1
9	1	0	0	1	1	1	1	0	0	1	1

1.5. Segment selection

Blocks designated with 5 in the block diagram (Figure 1). The circuit diagram is given for DC 6 YF 010 in Figure 3.

As has been previously mentioned, the signal to be displayed is selected with the aid of an AND-configuration using gates I 1017 to I 1019. The integrated circuit I 1020 forms a numerical signal (OR-configuration) from the output signals of the gate.

1.6. Selector switches

See the blocks designated with 6 in the block diagram (Figure 1), The circuit diagram is given for DC 6 YF 009 in **Figure 5**.

The selector switches (multiplexer) switch one of the four 5-Bit words to the output. In order to do this, the control input of the required word must at logic 1 level, and the control inputs for the other words at logic 0. The control inputs are designated with the roman numerals I to IV. They correspond to the numerals indicated on the screen (1st to 4th position). The operation of the multiplexer is taken over by the AND-configurations of integrated circuits I 901 to I 905. The integrated circuits I 906 and I 907 combine the corresponding outputs of gate I 901 to I 905 (or A, or B in order to form an OR-configuration. Input and output are of the same phase. Exception: the signal for the decimal point is also available in inverted form. For the application in question, four lines A, B, C and D for each digit, as well as the appropriate decimal point signal is switched to the output.

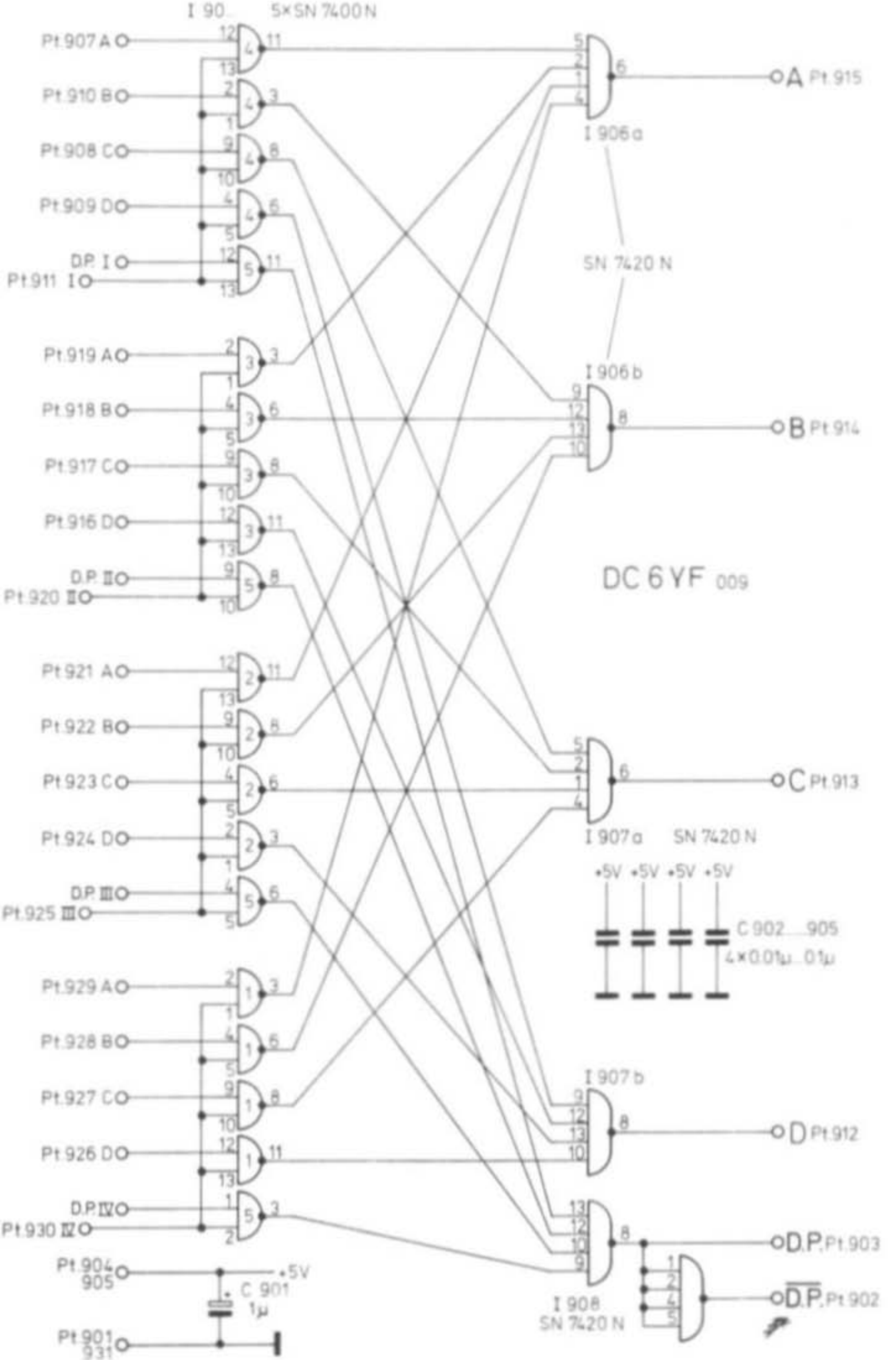

Fig. 5: Circuit diagram of the selector switch module (DC 6 YF 007)

1.7. Video signal synthesis

See the blocks designated with 7 in the block diagram (Figure 1). See circuit diagram given for DC 6 YF 008 in Figure 2.

A video signal with an amplitude of approx. 1 V / 75 Ohm can be taken from connection point Pt 806. The video signal comprises the horizontal and vertical synchronizing pulses, as well as the numerical signal. The synchronizing pulses are combined in gate I 801d, which is available in a negative going form at the output of I 801c. The numerical signal fed to the input Pt 808 appears at the output of I 801b as a positive going signal for white numerals on a dark background. The outputs of I 801 represent open collectors. The combined synchronizing signals of differing amplitude are added at the base of transistor T 801. This simple adding circuit ensures that no video signal appears during the duration of the synchronizing pulses. This is achieved without additional measures by the method of numerical signal generation. I 801a is used for inverting the numerical signal. Transistors T 801 and T 802 monitor the signal at the base of T 801 at high impedance and pass it via resistor R 811 to output Pt 806. The output impedance amounts to approx. 75 Ohm.

1.8. Power supply

See the blocks designated with 8 in the block diagram (Figure 1). See the circuit diagram given in **Figure 6**.

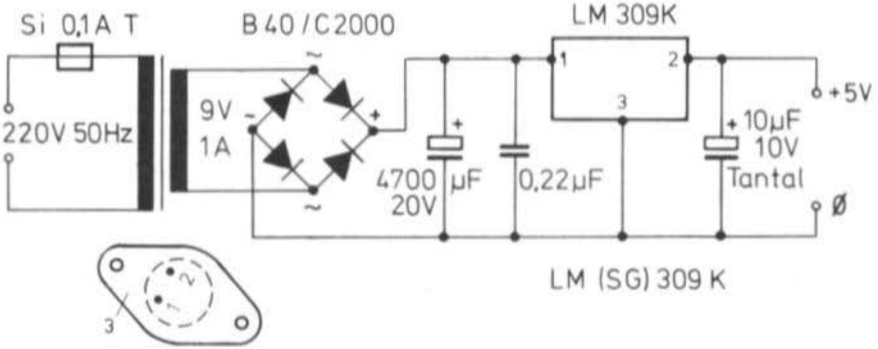

Fig. 6: Circuit diagram of the power supply

The current drain of the whole system amounts to approx. 600 mA at an operating voltage of 5 V. The circuit of the power supply is greatly simplified by use of an integrated power supply. In the author's prototype, the integrated circuit LM 309 K (or SG 309 K) is used. The integrated circuit is mounted on the case for heat dissipation.

The connection diagram of the LM 309 K is also given Figure 6. This integrated circuit has been especially developed for the power supply of TTL-circuits. It is protected by both current limiting, and a circuit against thermal overload (1). Even with the most unfavourable ambient conditions, the permissable voltage tolerances of TTL circuits will not be exceeded.

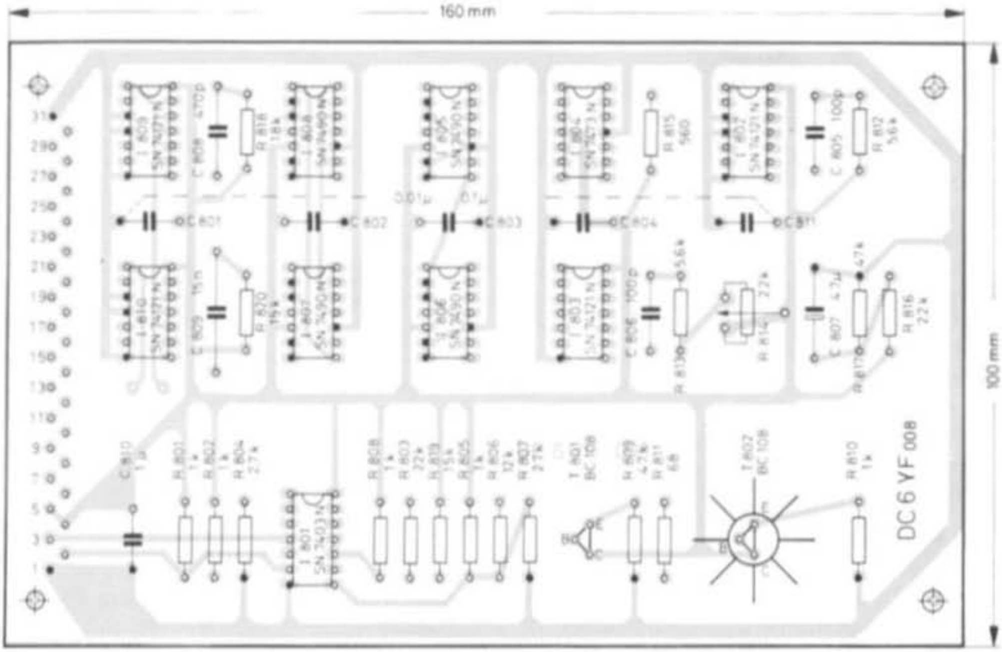

Fig. 7: Component locations on PC-board DC 6 YF 008

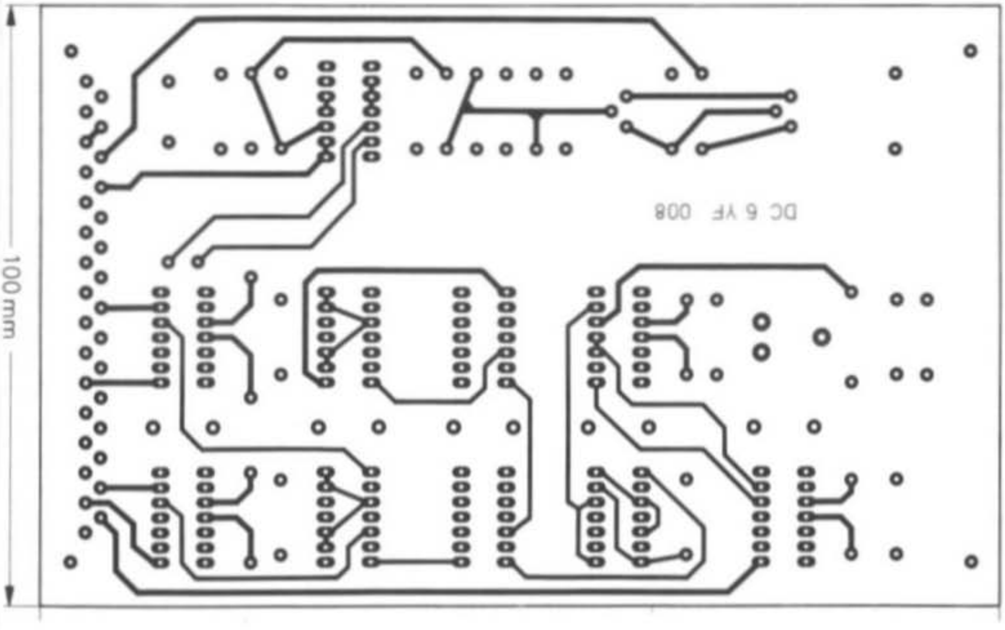

Fig. 8: Conductor side of PC-board DC 6 YF 008

2. MECHANICAL CONSTRUCTION

The three printed circuit boards of the numerical indication system are all double coated, with through contacts and conform to the European standard size of 160 mm by 100 mm. The connections are in the form of a 31 pin plug. The following component location plans show the component side of the boards, whereas the other side of the board is given separately for clarity.

2.1. PC-board DC 6 YF 008

Pulse generator and video signal synthesizer. The component location plan and the component side of the PC-board are given in the **Figure 7**. The other side of the PC-board DC 6 YF 008 is given in **Figure 8**. A photograph of the autor's prototype is given in **Figure 9**.

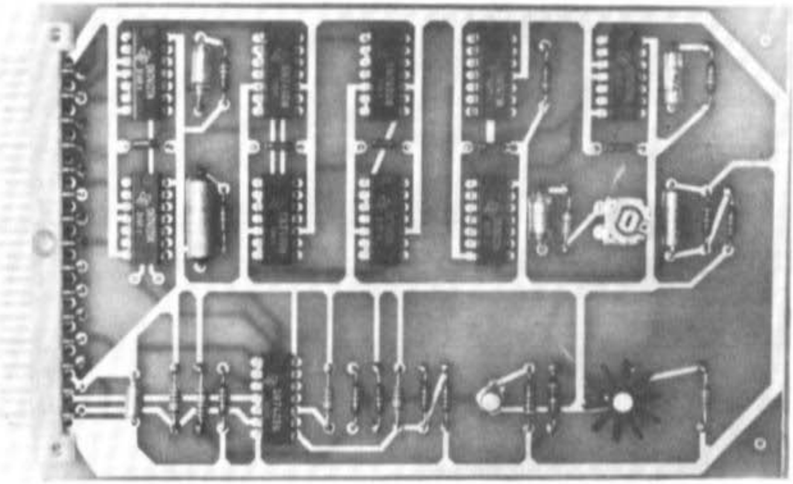

Fig. 9: Photograph of the author's prototype DC 6 YF 008

The connection points are as follows (in – input; out – output):

Pt 801:	Reference (0)	Pt 816:	Out. vertical synch. pulses
Pt 802:	Out. inverter	Pt 821:	Out. vertical synch. pulses
Pt 803:	In. inverter	Pt 828:	Out. horizontal synch. pulses
Pt 804, Pt 805:	+ 5 V	Pt 829:	Out. horizontal synch. pulses
Pt 806:	Out. video signal	Pt 830:	Out. clock pulses
Pt 808:	In. video or numerical signal	Pt 831:	Reference (0)

I 801 - I 810:	Integrated TTL circuits in DIL-case
T 801, T 802:	BC 108, BC 413 or similar silicon AF transistor
C 801 - C 804:	Ceramic capacitors
C 805, C 806, C 808:	Styroflex capacitors
C 807, C 810:	Tantalum electrolytic capacitors
C 809:	Plastic foil capacitor
R 801 - R 820:	Carbon resistors, max. spacing 12.5 mm

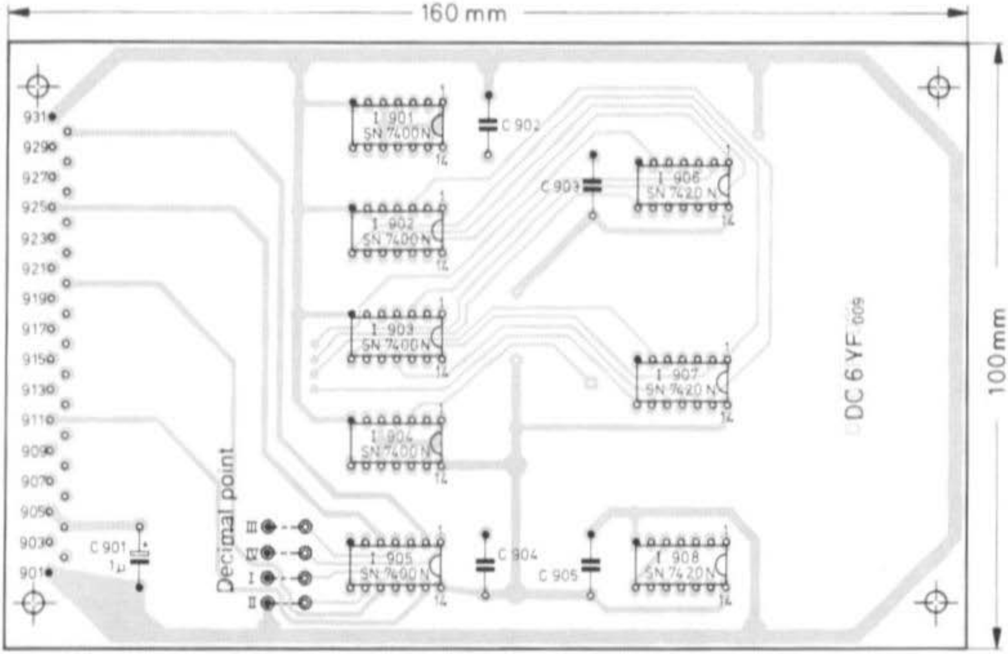

Fig. 10: Component locations on PC-board DC 6 YF 009

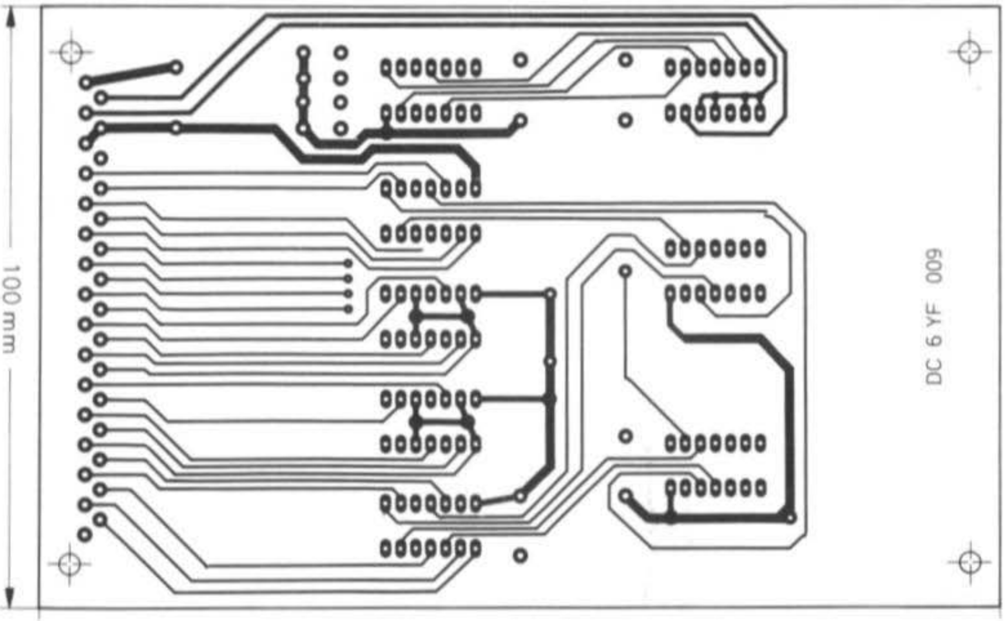

Fig. 11: Conductor side of PC-board DC 6 YF 009

2.2. PC-board DC 6 YF 009 (Selector switch)

The component location plan and conductor side of the board are given in **Figure 10.** The other side of the PC-board is shown in **Figure 11**. A photograph of the author's prototype is given in **Figure 12.**

The connection points are as follows (In. = input; Out. = output):

Pt 901: Reference point (0)
Pt 902: Out. inverted DP-signal
Pt 903: Out. DP-signal
Pt 904, Pt 905: + 5 V
Pt 907 - Pt 910: In. data 1st digit
Pt 911: In. control 1st digit
Pt 912 - Pt 915: Out. data 2nd digit
Pt 916 - Pt 919: In. data 2nd digit

Pt 920: In. control 2nd digit
Pt 921 - Pt 924: In. data 3rd digit
Pt 925: In. control 3rd digit
Pt 926 - Pt 929: In. data 4th digit
Pt 930: In. control 4th digit
Pt 931: Reference (0)
DP I, DP II, DP III, DP IV:
In. DP-signal (1st, 2nd, 3rd, 4th digit)

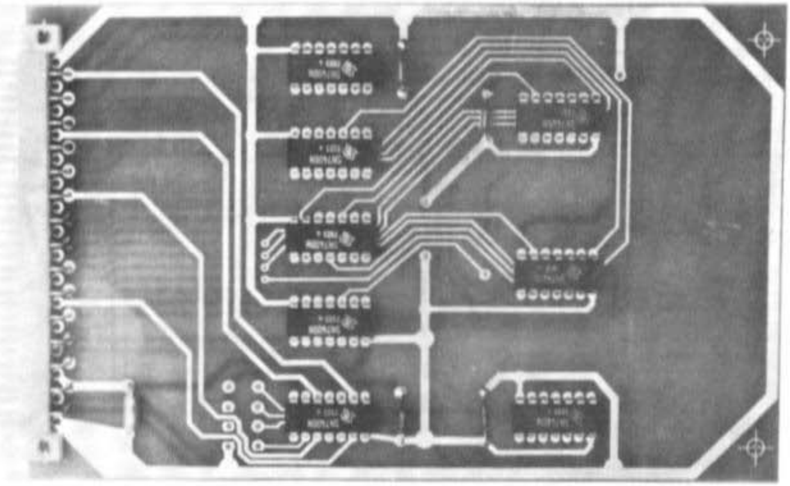

Fig. 12: Photograph of the author's prototype DC 6 YF 009

2.2.1. Component details

I 901 - I 908: Integrated TTL circuits in DIL-case
C 901: Tantalum electrolytic capacitors
C 902 - C 905: Ceramic capacitors

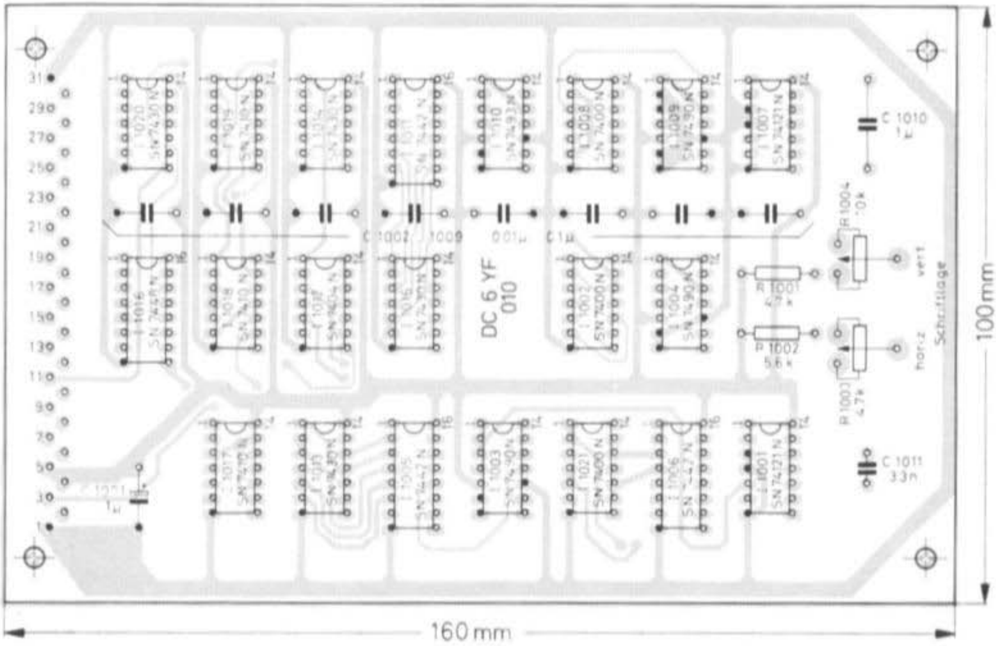

Fig. 13: Component locations on PC-board DC 6 YF 010

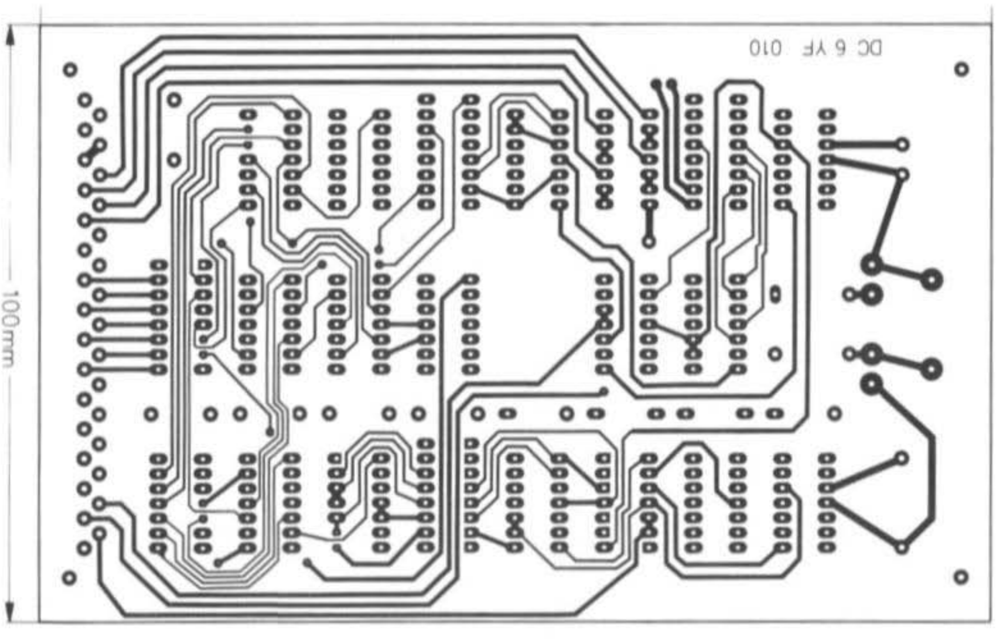

Fig. 14: Conductor side of PC-board DC 6 YF 010

2.3. PC-board DC 6 YF 010 (numerical generator)

The component location plan and the components side of the PC-board are given in **Figure 13**. The other side of the PC-board is given in **Figure 14**. A photograph of the author's prototype is given in **Figure 15**.

The connection points are as follows:
(In. = input; Out. = output):

Pt 1001: Reference (0)
Pt 1003 In. DP-signal
Pt 1004, Pt 1005: + 5 V
Pt 1006 - Pt 1009: Out. control of the selector switch
Pt 1011: Out. numerical signal
Pt 1013, Pt 1014, Pt 1018, Pt 1019: In. numerical data
Pt 1015, Pt 1016, Pt 1017: In. 7-segment module
Pt 1028: In. clock pulses
Pt 1029: In. horizontal synchronizing pulses
Pt 1030: In. vertical synchronizing pulses
Pt 1031: Reference (0)

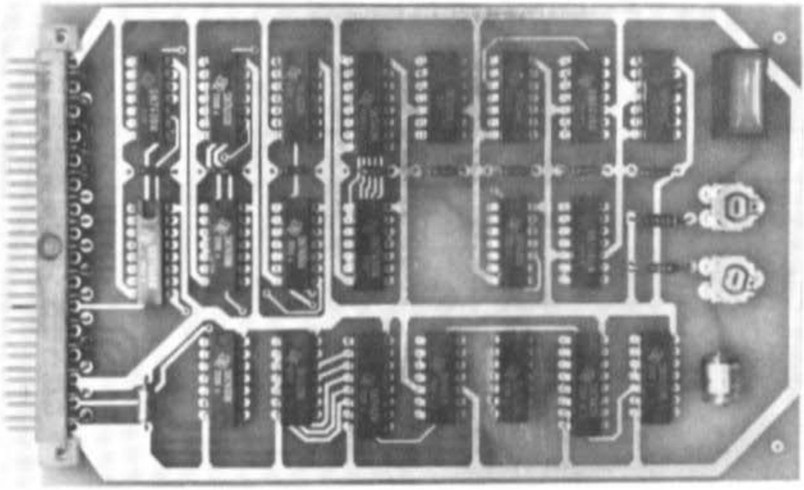

Fig. 15: Photograph of the author's prototype DC 6 YF 010

2.3.1. Component details

I 1001 - I 1020: Integrated TTL-circuits in DIL-case
C 1001: Tantalum electrolytic capacitor
C 1002 - C 1009: Ceramic disc capacitors
C 1010, C 1011: Plastic foil capacitors
R 1001, R 1002: Carbon resistors, max. spacing 12.5 mm
R 1003, R 1004: Trimmer resistor

3. COMPLETE SYSTEM

The wiring plan given in **Figure 16** shows the interconnection of the three PC-boards and the power supply. The power supply connections are designated with O (0 V) and + 5 (+ 5 V).

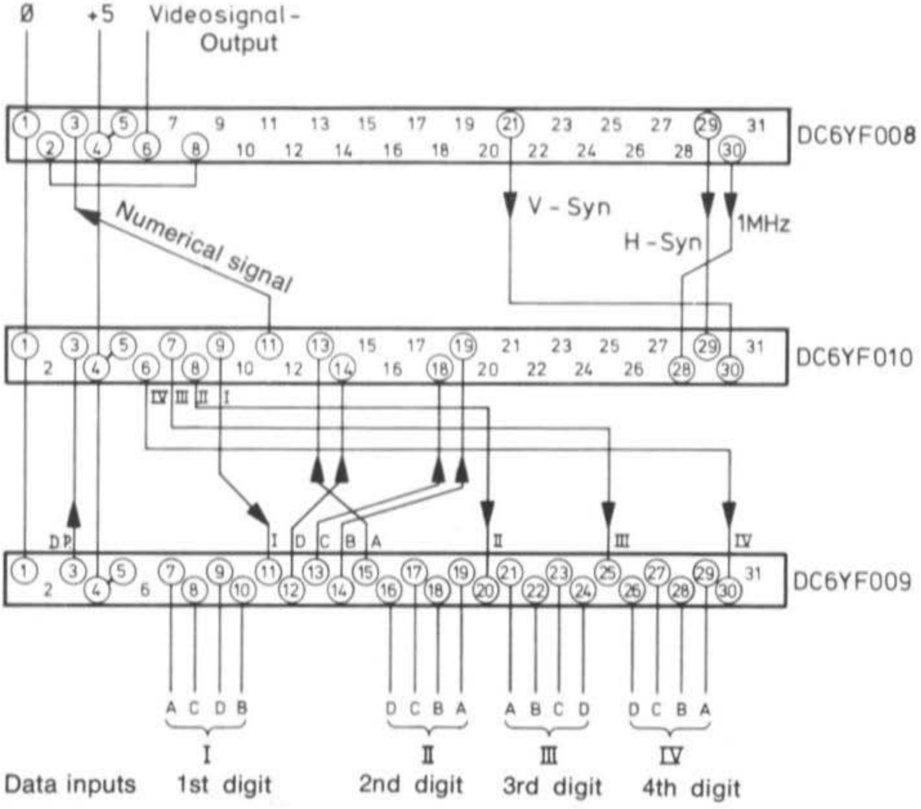

Fig. 16: Interconnection of the three modules

4. PREPARATIONS FOR OPERATION

After checking the components and wiring of the PC-board, the clock frequency is adjusted with the trimmer resistor R 814 to 1 MHz. This is done to the aid of frequency counter or an oscilloscope with calibrated deflection.

Firstly ensure that the various dividers are working correctly; the frequency at the end of the divider chain can be used for frequency measurements. It is possible for instance to check the pulse train at Pt 816 or Pt 821 having a frequency of 50 Hz, to the power line frequency. After connecting this system to a video monitor, a digit and a decimal point should be similated at BCD-inputs of the numerical generator instead of using the selector switch module DC 6 YF 009.

In this case the similated digit will appear four times on the monitor.

Example: Connections Pt 1013, Pt 1014, Pt 1018, Pt 1019, and Pt 1003 are connected to the 0-point Pt 1001. This will cause 0.0.0.0. to appear on the monitor. The position of numerals can be adjusted with the aid of R 1003 and R 1004. They will usually appear in the center of the picture tube.

5. NOTES

Various circuits are to be described in the next editions of VHF COMMUNICATIONS that can be connected to this numerical indication system. An AF-counter, a digital clock (hours and minutes) and a numerical selector circuit are under development. A digital voltmeter has already been described in (2).

6. REFERENCES

(1) U. Tillmann: An Integrated 5 V Voltage Stabilizer for 1 A
VHF COMMUNICATIONS 6, Edition 3/1974, pages 174 - 176

(2) K. Wilk: A Simple Digital Voltmeter
VHF COMMUNICATIONS 6, Edition 1/1974, pages 18 - 29

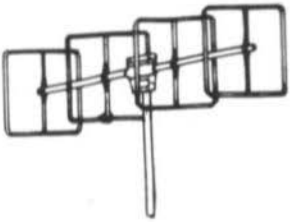

Introducing the new JAYBEAM Quad Antennas

Compact, high-gain, and robust

Technical specifications :	Q 4 / 2 m	Q 6 / 2 m
Gain (dBd)	10	12
Horizontal beamwidth (- 3 dB)	44	36
Maximal power rating (kW)	1	1
Length (m)	1.5	2.5
Weight (kg)	2.7	3.5
Wind loading (kg) at 160 km/h	22	33
Boom diameter (mm)	32	32

Verlag UKW-BERICHTE, H. Dohlus oHG
D-8523 BAIERSDORF, Jahnstraße 14
West-Germany - Telephone (0 91 91) 91 57 or (0 91 33) 33 40
Bank accounts: Raiffeisenbank Erlangen 22411, Postscheckkonto Nürnberg 30455-858

A SIMPLE DIGITAL CLOCK

by K. Wilk, DC 6 YF

The circuit of this digital clock is very easily constructed using TTL-integrated circuits. The BCD-coded output signals can be used to drive various different indicator circuits. This means that it is also suitable for use with the numerical indicator system described in (1), for which it was actually designed. The power line frequency (50 Hz) is used as clock. Outputs are available for four digits: two each for hours (upto 24) and minutes.

1. OPERATION

The operation of the circuit is to be described with the aid of the block diagram given in **Figure 1.** The sinusoidal power line frequency of 50 Hz is converted into a suitable square-wave signal with a period of 20 ms in the pulse shaper. This signal is then passed through a 30 : 1 (0.6 ms) and a 100 : 1 divider in order to obtain one pulse every 60 s (1 minute). During normal operation, the minute pulses are passed to the minute and hours counters. The BCD-coded outputs of these counters can be directly fed to the required indicator system. An intermediate storage as used in frequency counters and digital voltmeters is not required, since the state of the counter does not change between the minute pulses.

Circuits are provided to set the hours and minutes. These comprise a setting switch, suppression circuit, and switching circuit. The suppression circuit ensures that no extra pulses are provided due to contact bounce when changing from the setting to clock mode. The setting frequency was found experimentally; too low a frequency results in a long setting time, whereas it will be difficult to set the clock if the setting frequency is too high.

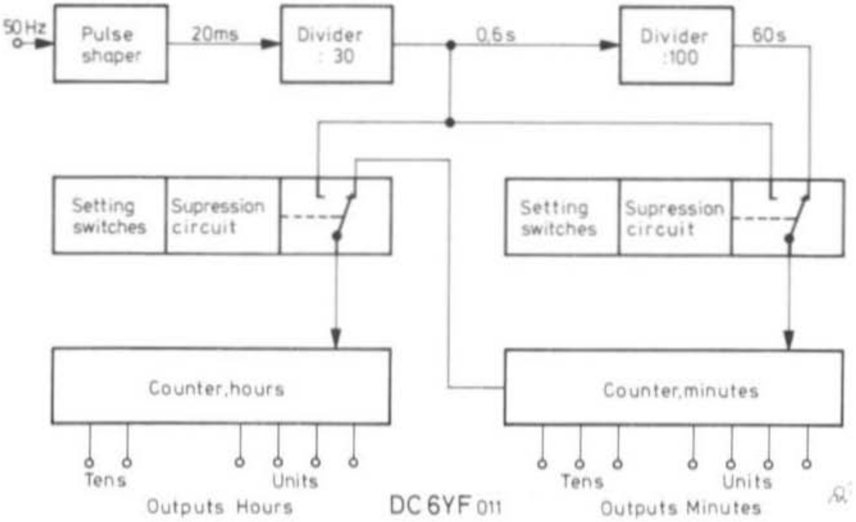

Fig. 1: Block diagram of the simple digital clock DC 6 YF 011

2. CIRCUIT DESCRIPTION

The circuit diagram of the digital clock is given in **Figure 2.** A matching circuit comprising transistor T 1101 is provided at the input of the pulse shaper. The signal at the collector of this transistor is at TTL-level. The slope of the pulses is increased without jitter in the Schmitt-trigger inputs of the subsequent inverter I 1107 a/b.

The 30 ÷ 1 divider comprises the two decade counters I 1101 (÷ 3) and I 1102 (÷ 10); I 1101 is connected so that it is reset to 0 via the reset inputs after repetition every third step of the counter. The pulse time at the output of the divider (30 ÷ 1) amounts to 0.6 s.

The 100 ÷ 1 divider comprises counters I 1103 (÷ 10) and I 1104 (÷ 10). The pulse repetition time at the output of the 100 ÷ 1 divider amounts to 60 s = 1 minute.

The minute counter is formed by the decade counters I 1111 for the units and I 1110 for the tens. I 1110 is connected so that it is reset to 0 after every sixth pulse of the counter.

The hour counter comprises the decade counters I 1109 for the units and I 1108 for the tens. The counter will be reset to 0 after the 24th step via the reset inputs.

The setting circuits for both minutes and hours are identical. Each comprises a suppression circuit for the setting switches and the switches themselves. When the clock is operating in the normal clock mode, connections Pt 1117 (1121) and Pt 1118 (1122) of the setting circuits are connected together. In this case, the gate outputs will be at the following level:

I 1106 c (I 1106 a) : Logic 0 (L)
I 1106 d (I 1106 b) : Logic 1 (H)
I 1105 c (I 1105 a) : Logic 1 (H)

This means that the minute (or hour) pulses are fed from I 1104 (1110) to the input of the minute (or hour) counters.

Whilst setting the time, connection Pt 1119 (1123) and Pt 1118 (1122) are connected together. The flip-flop circuit comprising I 1106 c/d (a/b) ensures that the state of the flip-flop outputs changes at the first contact of the mechanical contacts of the setting switch so that any contact bounce will have no effect. A simple flip-flop circuit is often used for suppressing mechanical contact bounce. Setting pulses with a pulse repetition time of 0.6 s are now fed to the counter instead of the minute or hour pulses.

3. MECHANICAL CONSTRUCTION

The digital clock is built-up on a double coated PC-board of 100 mm by 160 mm (European standard size) with through contacts **(see Fig.3).**
The connections are as follows (In = Input; Out = Output):

Pt 1101, 1131:	Reference level
Pt 1102, 1103:	In, 10 to 20 V, 50 Hz
Pt 1104, 1105:	In, + 5 V DC
Pt 1117 - 1119:	Setting, minutes
Pt 1121 - 1123:	Setting, hours
Pt 1107 - 1110:	Out, minute units
Pt 1112 - 1115:	Out, hour units
Pt 1125 - 1126:	Out, hour tens
Pt 1128 - 1130:	Out, minute tens

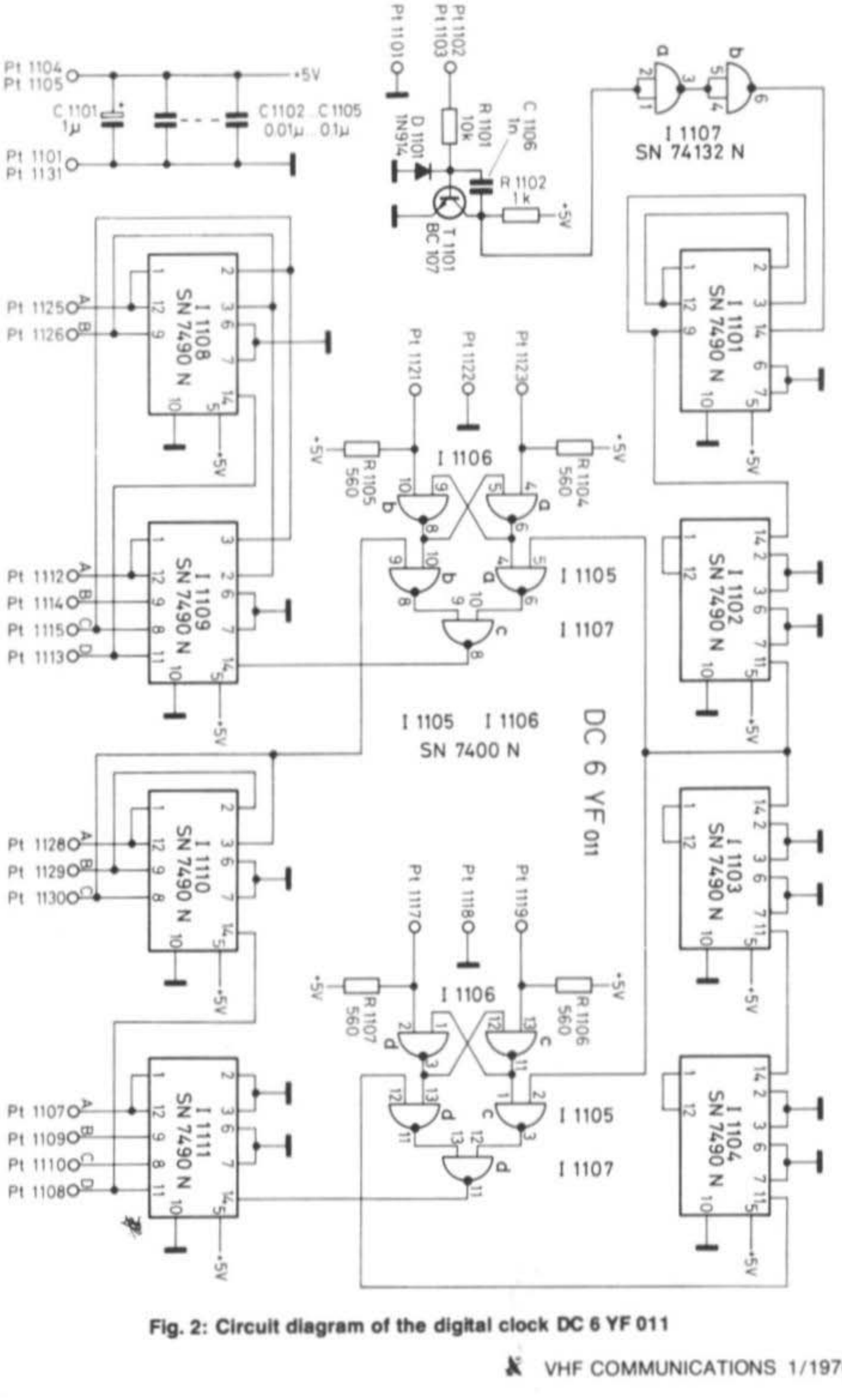

Fig. 2: Circuit diagram of the digital clock DC 6 YF 011

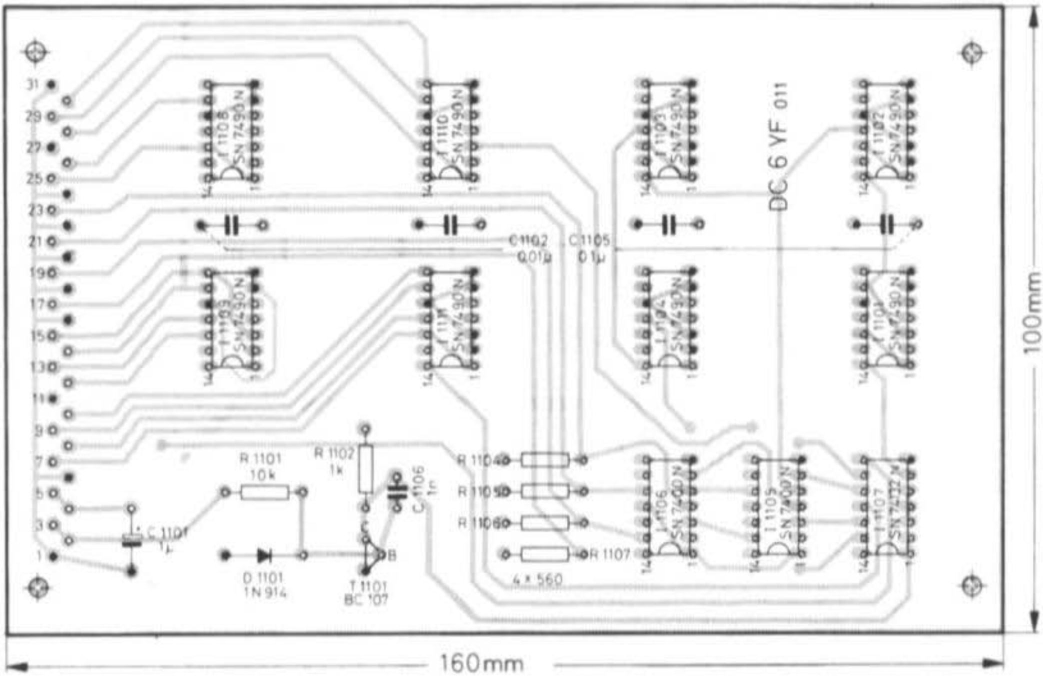

Fig. 3: PC-board DC 6 YF 011

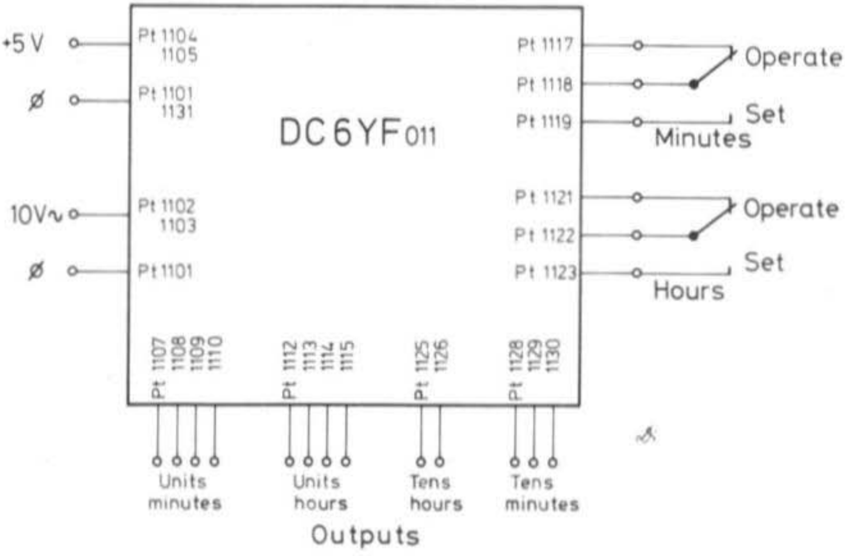

Fig. 4: External connections

4. COMPONENT DETAILS

All integrated circuits are digital TTL-types.

I 1101 - 1104, I 1108 - 1111:	Decimal counters SN 7490 N
I 1105, 1106:	Gate SN 7400 N
I 1107:	Gate (Schmitt-trigger inputs) SN 74123 N
T 1101:	Transistor BC 107 or similar
C 1101:	Tantalum electrolytic capacitor 1 μF / 10 V
C 1102 - 1105:	Ceramic capacitor 0.01 - 0.1 μF

5. EXTERNAL CIRCUIT

The required external wiring and components are given in **Figure 4.** The setting switches are change-over types. Due to the built-in suppression circuits, no special demands are placed on the contacts. The minute and hour outputs can be connected to any indicator system with BCD-input.

6. PREPARATIONS

An operating voltage of + 5 V should be connected to Pt 1104 and Pt 1105. The current drain is approximately 250 mA. An AC voltage of 10 to 20 V (50 Hz) is now required. No alignment or adjustment is required. The time readout is set by depressing the setting button until the required time is indicated.

7. ACCURACY

The accuracy of the digital clock depends on the stability of the power line frequency. As is known, the long-time stability is better than the short-time stability since the frequency is controlled by the electrical authorities. An accuracy of ± 0.025 % (2.5×10^{-4}) per week is usually obtained, however, the network permits short-time fluctions of ± 2 %. In West Germany, the regional power stations must disconnect from the main network if the frequency deviation is more than 5 %.

8. REFERENCES

(1) K. Wilk: Numerical Indication System, Part I
VHF COMMUNICATIONS (7), Edition 4/1975, pages 250 - 251.

(2) K. Wilk: Numerical Indication System, Part II
in this edition of VHF COMMUNICATIONS

ANTENNA NOTEBOOK
Antennas for Mobile Telecommunications, Part II

by T. Bittan, DJ 0 BQ / G 3 JVQ

4. DEVELOPMENT OF A CIRCULAR-POLARIZED MOBILE ANTENNA

The demands placed on such an antenna were: Omnidirectional characteristics in all polarization planes, as well as acceptance of all polarization angles. This was found to be difficult to achieve in practice, and several different configurations were tried before suitable antennas were found. The first group of antennas that satisfied these demands are shown in **Figures 1 to 3**. They are of similar design to those used later on OSCAR 7.

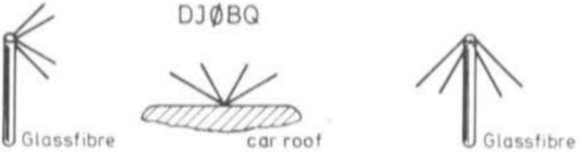

Figures 1 - 3: Various types of canted crossed-dipoles used

All three antennas consisted of two canted dipoles fed 90° out-of-phase which were mounted in a plane 90° from another. There are two methods of matching these antennas to the feeder cable: Firstly to use a gamma-match for each antenna and feeding the antennas with a 90° phasing cable; secondly direct feed of each dipole with coaxial cable with appropriate matching and phasing cable. The author prefers the second method, especially for mobile operation where soiling and contact problems are sometimes severe. The problem was to match and phase two canted dipoles each having an input impedance of 30 - 40 Ohm at the center. Since no lower impedance cable than 50 Ohm was available, the author used a matching and phasing harness as shown in **Figure 4**. It will be seen that each of the canted dipoles is interconnected via an electrical $\lambda/4$ - length ($\lambda/4 \times VF$) comprising two parallel-connected 75 Ω cables. This results in an interconnection cable impedance of $75/2 = 37.5\ \Omega$ which is suitable for connection to the canted dipole. The resulting feedpoint impedance of the interconnected dipoles now amounts to $37.5/2 = 18.75\ \Omega$ which can be matched to a 50 Ω cable using a $\lambda/4$ - matching transformer of 30 Ω. A suitable $\lambda/4$ - transformer link can be made from parallel-connecting two $\lambda/4$ pieces of 60 Ω cable.

These antennas were developed several years ago and satisfied the actual demands placed upon them. However, the »gain« of the antenna of - 6 dB on the test range (- 3 dB for omnidirectional characteristic and further - 3 dB for circular-polarization) did not satisfy the author, although the full advantages of such an antenna were realized for non-line-of-sight applications.

Since mainly vertical polarization is used for mobile communications, and since a vertical whip provides an omnidirectional characteristic, it was decided to use such an antenna instead of a canted dipole in the vertical plane. The author also decided to use a halo rather than the canted dipole for the horizontal plane due to its better omnidirectional characteristics. A coaxial dipole was used for the vertical element due do the ease of mounting it on a ski-rack or similar, and also because no additional mast was required.

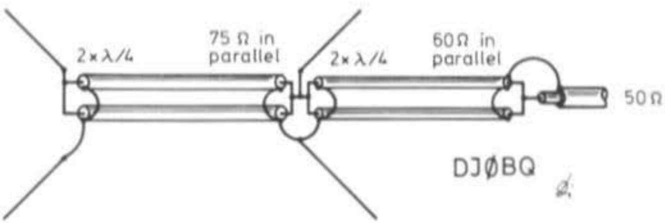

Fig. 4: Matching cable used for interconnecting two canted dipoles

5. MECHANICAL CONSTRUCTION

5.1. Vertical Element

The vertical element can be made from aluminium or similar metal tubing. The author used 25.5 mm (1") aluminium tubing for the lower part of the coaxial antenna. With a velocity factor of 0.95 due to the vicinity of the coaxial cable and mounting structure, a length of $\lambda/4 \times 0.95 = 49.4$ cm results. The upper element is somewhat longer due to its velocity factor of 0.97: $\lambda/4 \times 0.97 = 50.45$ cm. A stainless steel whip and base of a Jaybeam TA 4 mobile antenna were used by the author, but a suitable base and upper element can be constructed at home, for instance, from brass tubing and an epoxy casting. The dimensions are given in **Figure 5**.

Fig. 5:
Dimensions and construction
of the vertical element

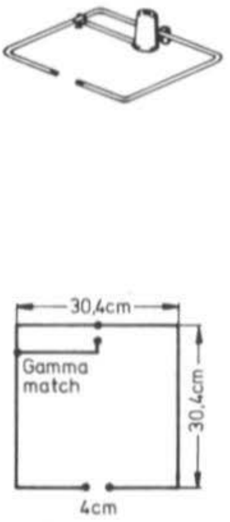

Fig. 6:
Dimensions and construction
of the horizontal element

5.2. Horizontal Element

The horizontal element is basically a conventional square halo similar to the Jaybeam HM/2 m. This halo is so inexpensive that it is not really worthwhile constructing it from aluminium or brass tubing. It uses a gamma match as feed. The dimensions and a drawing of the halo are given in **Figure 6**.

5.2. Mounting of the Antennas together

The halo is mounted to the coaxial antenna at the cold upper end of the lower element of the vertical antenna, as shown in **Figure 7**.

Since the Jaybeam HM/2 m is designed for mounting in upto a 25.5 mm (1") mast, this can be easily achieved by drilling a hole just below the top of the lower element of the coaxial antenna through which the mounting screw can be placed.

The combined antenna can be mounted to a car rack, mast etc. with the aid of a suitable clamp.

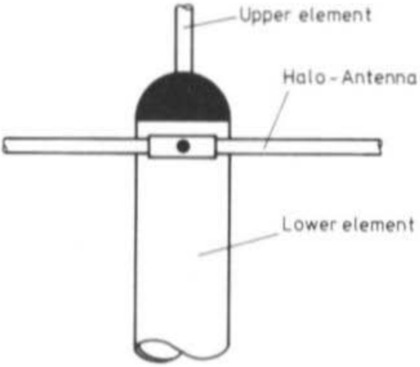

Fig. 7: Mounting of the vertical and horizontal elements

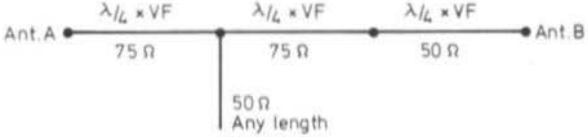

Fig. 8: Phasing cable for interconnection of the vertical and horizontal elements

6. ELECTRICAL CONNECTION

There are several ways of interconnecting the antennas. Any of the phasing systems described in VHF COMMUNICATIONS for crossed yagis can be used with these antennas. For instance, it will be possible to select six polarization modes if the switching system described in (2) is used. However, since this antenna is mainly to be used for mobile applications where continuous switching is not worthwhile, a phasing arrangement as shown in **Figure 8** would be suitable.

This phasing cable can be accomodated within the lower element of the coaxial antenna so that only the actual feeder to the station can be seen leaving the base of the antenna. If the diameter of the lower element is too narrow for this, the interconnection shown in **Figure 9** would also be possible.

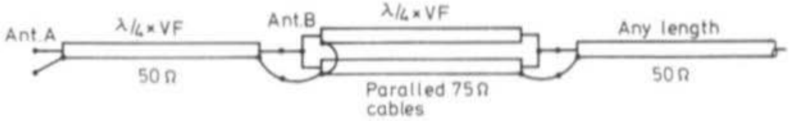

Fig. 9: Alternative method of interconnection the vertical and horizontal elements

In this case, the two antennas are firstly interconnected with an electrical λ/4 length of 50 Ω cable, and the resulting feedpoint impedance of 25 Ω transformed up to approximately the correct impedance using a λ/4 matching transformer of two parallel-connected 75 Ω cables (e.g. RG-59/U).

The final version developed by the author possessed a 3/4 λ phase difference between the two planes to further increase the diversity effect. Measurements made on the antenna in comparison to 5/8 λ and λ/4 whip antennas have shown it to be considerably superior to conventional whip antennas, and at no time was it found inferior. However, one word of warning when using such an antenna in conjunction with circular polarized stations: The polarization of the mobile signal changes constantly according to whether the car is driving towards or away from this station, as well as depending on whether the direct signal, a signal with one reflection or two reflections is received. In this case, it is advisable for circular polarization to only be used at one end of the circuit rather than both.

Such an antenna would also be very suitable for fixed station use, especially as receive antenna for repeaters. Further development is being made to obtain a similar antenna for fixed stations that possesses the same characteristics, but higher gain.

7. PHASING OF VERTICAL ANTENNAS FOR MOBILE AND FIXED OPERATION

This development ran together with the development of the circular-polarized mobile antennas. The main aim was to obtain a diversity effect to avoid the large fluctuations between in-phase and out-of-phase signals received due to multipath propagation. It was found that the previously described antenna was more suitable for this application. However, several interesting findings resulted in this experimental program which make it useful for a number of mobile and fixed station applications.

It should be noted that a phased arrangement of two or more antennas will **always** have a certain directional characteristic in the **transmit** mode which can be changed by altering the phasing between these antennas. The reason why the transmit mode is underlined, is because it was found that differing characteristics were present in the **receive** mode. It was found that the directional characteristic is only strictly present when the received signal provides an equal amplitude to both antennas. In the extreme case where only one antenna receives a certain signal (e.g. when a multipath signal is being cancelled out in one antenna), the other antenna will provide a virtually omnidirectional characteristic. Although there are an infinite number of combinations of spacings and phasing angles, the author is to select only a few specific spacings and phase angles that provide useful characteristics. The aim is, to obtain bi-directional characteristics that can be switched for endfire or broadside radiation.

The best patterns are obtained with an antenna spacing of 3/8 λ (0.375 λ), λ/2 (0.5 λ) and 5/8 λ (0.625 λ) and only these spacings are to be considered in this article. Since only a broadside or endfire characteristic is required it is only necessary to consider phase differences between the antennas of 0° and 180°. The phasing cable required to achieve this, is given in **Figure 10 and 11.**

These phasing cables can be used for all spacings. The phasing can be switched by using the circuit given in **Figure 12**. The extra λ/2 cable will not interfere when the 0°phase difference is selected, since it forms a λ/2 open stub at the design frequency.

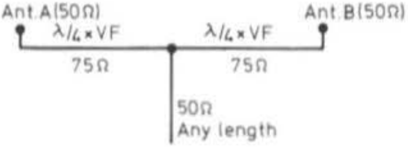

Fig. 10: Phasing cable required to obtain a broadside characteristic

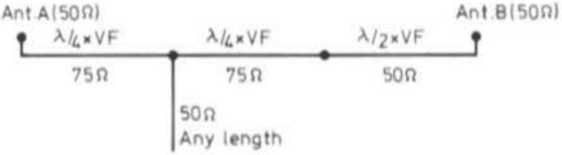

Fig. 11: Phasing cable required to obtain an endfire characteristic

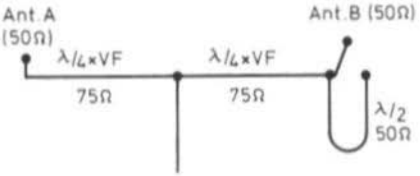

Fig. 12: Arrangement for switching the phasing for an endfire or broadside characteristic

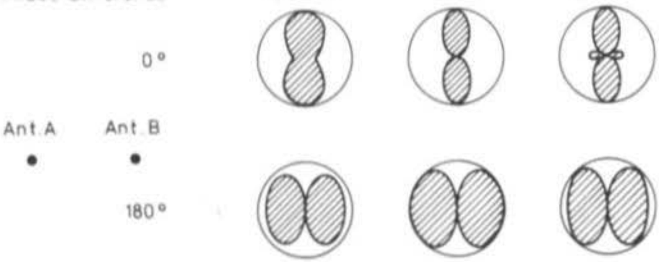

Fig. 13: Radiation patterns obtained at various spacing and phase differences

7.1. Radiation Patterns Obtained

The radiation patterns obtained using the above phasing cable at spacings of 0.375 λ, 0.5 λ and 0.625 λ are given in **Figure 13.**

It will be seen that the most favourable pattern for two omnidirectional antennas is obtained at a spacing of 0.5 λ. The reduction in beamwidth provides a gain over a single, omnidirectional antenna of approximately 3 dB depending on the spacing.

This means that it is possible to obtain a very efficient array for mobile, portable or fixed station use that is able to provide a gain of 3 dB (two λ/4 groundplanes), 6 dB (two 5/8 λ antennas) or 8 dB (for two stacked 5/8 λ colinears) without mechanical rotation.

Naturally, it is also possible to use two of the described circular-polarized antennas in such a phasing arrangement.

8. REFERENCES

(1) T. Bittan: Antennas for Mobile Telecommunications – Part I
VHF COMMUNICATIONS (7), Edition 3/1975, Pages 168 - 173

(2) T. Bittan: Further details on Circular Polarization
VHF COMMUNICATIONS (7), Edition 1/1975, Pages 21 - 25

MATERIAL PRICELIST OF EQUIPMENT
described in Edition 1/1976 of VHF COMMUNICATIONS

OE 2 JG 001	**FOXHUNT RECEIVER FOR 2 m**		**Ed. 1/1976**
PC-board	OE 2 JG 001	(with printed plan)	DM 13,—
Coilset	OE 2 JG 001	(4 coilsets, 4 coilformers)	DM 10,—
Kit	**OE 2 JG 001**	**with above parts**	**DM 23,—**
DC 3 NT 001/002	**FM TRANSCEIVER**		**Ed. 1+2/1976**
PC-board	DC 3 NT 001	(with printed plan)	DM 15,—
PC-board	DC 3 NT 002	(double coated)	DM 24,—
Semiconductors	DC 3 NT 001/002	(24 transistors, 9 diodes, 4 ICs)	DM 114,—
Minikit	DC 3 NT 001/002	(3 relays, 23 coilformers, 19 foil trimmers, 1 spindle trimmer, 10 styroflex capacitors	DM 74,—
Ceramic filters		SFE 10.7 MA and CFM 455 E	DM 40,—
Crystals	HC-25/U	(5 crystals, see mag.)	DM 120,—
Kit	**DC 3 NT 001/002**	**with above parts**	**DM 380,—**

Verlag UKW-BERICHTE, H. Dohlus oHG
D-8523 BAIERSDORF, Jahnstraße 14
West-Germany - Telephone (0 91 91) 91 57 or (0 91 33) 33 40
Bank accounts: Raiffeisenbank Erlangen 22411, Postscheckkonto Nürnberg 30455-858

INDEX TO VOLUME 7 (1975) OF VHF COMMUNICATIONS

SPRING EDITION 1/1975

SUMMER EDITION 2/1975

AUTUMN EDITION 3/1975

J. Kestler DK 1 OF	A Stereo VHF/FM Receiver with Frequency Synthesizer Part II : Construction	130 - 145
R. Jux, DJ 6 UT H. Dittberner, DL 3 MH	A Transmit Mixer and Linear Amplifier for 23 cm using four 2 C 39 Tubes	146 - 160
A. Schädlich DL 2 AS	A Receive Converter for the 13 cm Band with Diode Mixer	161 - 167
Editors	Notes and Modifications	167
T. Bittan DJ 0 BQ/G 3 JVQ	Antenna Notebook : Antennas for Mobile Telecommunications	168 - 173
R. Niefind DK 2 ZF	Preliminary Evaluation of the Telemetry from OSCAR 7	174 - 188

WINTER EDITION 4/1975

F. Weingärtner DJ 6 ZZ	A Transmit Converter for 144 MHz with Schottky Ring Mixer	194 - 199
J. Kestler DK 1 OF	A Stereo VHF-FM Receiver with Frequency Synthesizer	200 - 202
R. Lentz DL 3 WR	Constant-Amplitude SSB Advantageous or Not ?	203 - 208
E. Zimmermann HB 9 MIN	A Four-Digit Frequency Counter for 250 MHz using a 7-Segment LED-Readout	209 - 214
D. Hull VK 3 ZDH	AMSAT Phase III Program	215 - 216
R. Lentz DL 3 WR	Noise in Receive Systems	217 - 235
K. Hupfer DJ 1 EE	A Colinear Antenna for the 13 cm Band	236 - 238
G. Rühr OH 2 KT	A Miniature Receiver for the 2 m Band	239 - 243
H. J. Brandt DJ 1 ZB	A Simple Bandpass Filter for the 2 m Band	244 - 249
K. Wilk DC 6 YF	A Numerical Indication System	250 - 251

Verlag UKW-BERICHTE, H. Dohlus oHG
D-8523 BAIERSDORF, Jahnstraße 14
West-Germany - Telephone (0 91 91) 91 57 or (0 91 33) 33 40
Bank accounts: Raiffeisenbank Erlangen 22411, Postscheckkonto Nürnberg 30455-858

LINEAR AMPLIFIER FOR 70 cm USING A 2 C 39 TUBE

Further development of the amplifier described in edition 3/72 VHF COMMUNICATIONS

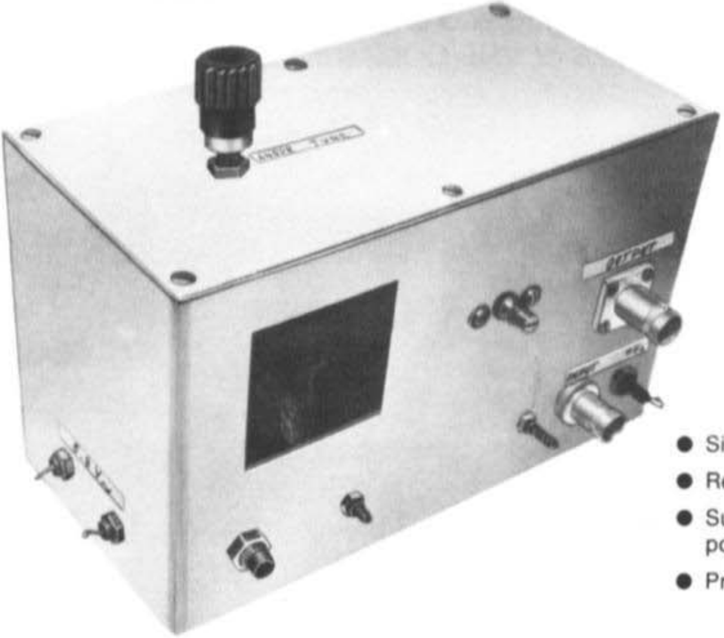

- Silver-plated
- Ready-to-operate
- Supplied without tube, power supply and blower
- Price DM 438,—

INTERDIGITAL BANDPASS FILTER FOR 23 cm

Similar to that described in edition 3/71 VHF COMMUNICATIONS

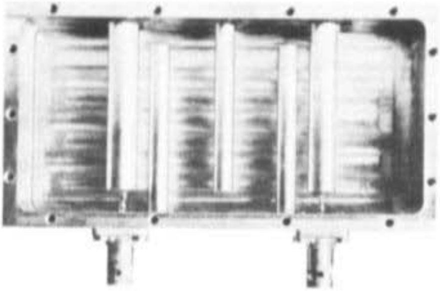

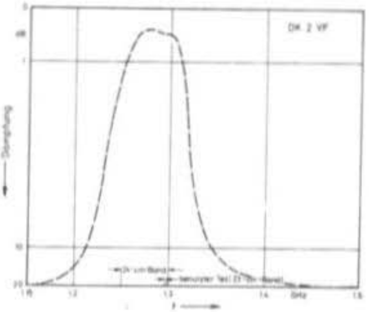

The advantages of interdigital filters is well known: High stopband attenuation and low insertion loss. The curve and insertion loss values are virtually independent of the matching (the filter can be shorted or have an open circuit when an isolation of at least 6 dB exists between this point and the filter).

Price with BNC sockets	DM 92.00
Price without sockets	DM 86.50

STANDARD FREQUENCY OSCILLATOR WITH AN ACCURACY OF 10^{-8}

Ready-to-operate, aged and aligned as described in edition 2/1975 of VHF COMMUNICATIONS

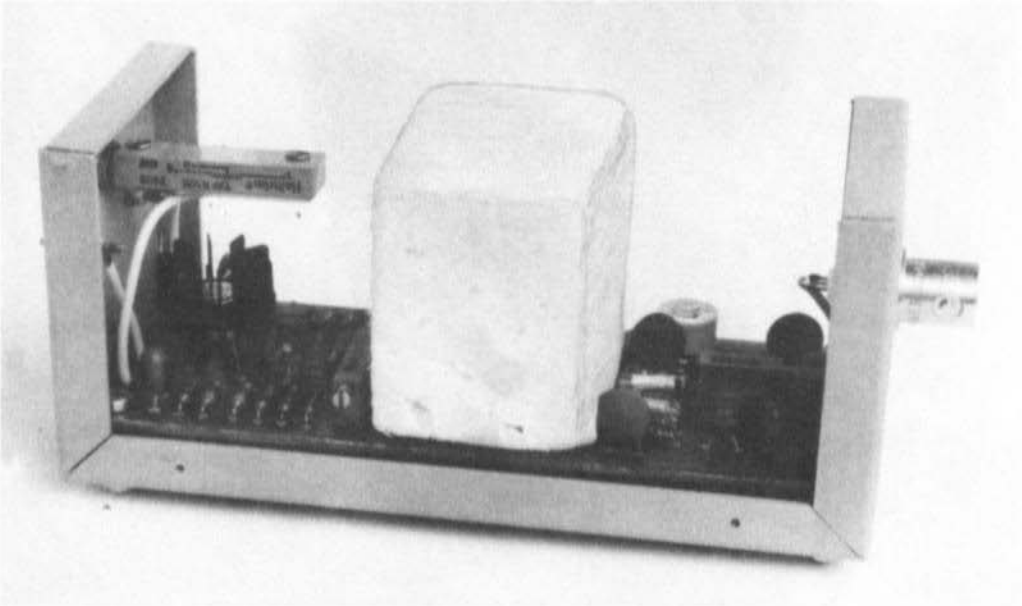

View with cover removed

Frequency:	5 MHz (optimal 1 MHz to 20 MHz)
Crystal:	AT-cut, fundamental
Crystal holder:	HC-36U
Frequency adjustment:	Mechanical: approx. 3×10^{-5} $\frac{\Delta f}{f}$
	Electrical: approx. 1×10^{-6} $\frac{\Delta f}{f}$
Output voltage:	approx. 1 V, sinusoidal
Output impedance:	approx. 200 Ω
Ambient temperature range:	-20 to +40 °C
Frequency deviation:	
Due to aging:	less than 1×10^{-8} $\frac{\Delta f}{f}$ /day after 24 h period
Due to temperature:	less than 1×10^{-9} $\frac{\Delta f}{f}$ /°C
Due to supply voltage fluctuations of ±10% at 18 V:	less than 5×10^{-9} $\frac{\Delta f}{f}$
Due to loading (no-load/short):	less than 1×10^{-8} $\frac{\Delta f}{f}$

Frequency error after switching on at a temperature of 25 °C and a supply voltage of 18 V:

Deviation $\frac{\Delta f}{f}$ from the required frequency after 3 min.: less than 10^{-6}
after 6 min.: less than 10^{-7}
after 10 min.: less than 10^{-8}

Operating voltage:	+ 14 V to + 28 V to ground
Heating current:	700 to 900 mA
Operating current:	Less than 150 mA at 18 V
Dimensions:	125 mm x 55 mm x 55 mm
Weight:	Approx. 200 g
Price :	**DM 495,—**

Braun

NEW

High-Performance VHF Equipment

2-m-SSB/FM-Transceiver SE 400 digital

Astounding that such a high-quality Braun product is available at such a low price.

There is no competition with respect to the sensitivity, cross modulation rejection and selectivity of the Braun SE 400 digital. The required mode: CW, USB, LSB, FM or FM-repeater is selected at the push of a button. Continuous tuning from 144 MHz to 146 MHz. Digital frequency readout. Automatic frequency shift of 600 kHz in the FM-repeater mode. Automatic sideband reversal can be selected for satellite communications (OSCAR 7).

Fully solid state with silicon transistor complement. Output power 10 W.
12 V operating voltage, and built-in AC power supply.

Built-in loudspeaker, S meter, Wattmeter, receiver fine tuning (RIT), squelch, and calling tone.

Write for full technical details

Karl Braun
Communications Equipment

D-85 Nürnberg
Deichslerstr. 13, W. Germany

CRYSTAL FILTERS OSCILLATOR CRYSTALS

SYNONYMOUS FOR QUALITY AND ADVANCED TECHNOLOGY

NEW STANDARD FILTERS

CW-FILTER XE-9NB see table

SWITCHABLE SSB FILTERS

for a fixed carrier frequency of 9.000 MHz

XF-9B 01

8998.5 kHz for LSB

XF-9B 02

9001.5 kHz for USB

See XF-9B for all other specifications
The carrier crystal XF 900 is provided

Filter Type		XF-9A	XF-9B	XF-9C	XF-9D	XF-9E	XF-9NB
Application		SSB Transmit	SSB	AM	AM	FM	CW
Number of crystals		5	8	8	8	8	8
3 dB bandwidth		2.4 kHz	2.3 kHz	3.6 kHz	4.8 kHz	11.5 kHz	0.4 kHz
6 dB bandwidth		2.5 kHz	2.4 kHz	3.75 kHz	5.0 kHz	12.0 kHz	0.5 kHz
Ripple		< 1 dB	< 2 dB	< 2 dB	< 2 dB	< 2 dB	< 0.5 dB
Insertion loss		< 3 dB	< 3.5 dB	< 3.5 dB	< 3.5 dB	< 3.5 dB	< 6.5 dB
Termination	Z_t	500 Ω	500 Ω	500 Ω	500 Ω	1200 Ω	500 Ω
	C_t	30 pF	30 pF	30 pF	30 pF	30 pF	30 pF
Shape factor		(6:50 dB) 1.7	(6:60 dB) 1.8	(6:60 dB) 1.8	(6:60 dB) 1.8	(6:60 dB) 1.8	(6:60 dB) 2.2
			(6:80 dB) 2.2	(6:80 dB) 2.2	(6:80 dB) 2.2	(6:80 dB) 2.2	(6:80 dB) 4.0
Ultimate rejection		> 45 dB	> 100 dB	> 100 dB	> 100 dB	> 90 dB	> 90 dB

XF-9A and XF-9B complete with XF 901, XF 902
XF-9NB complete with XF 903

KRISTALLVERARBEITUNG NECKARBISCHOFSHEIM GMBH
D 6924 Neckarbischofsheim · Postfach 7