HOME STUDY TELEVISION SERVICING COURSE

PREPARED BY
RCA INSTITUTES, INC.
A SERVICE OF RADIO CORPORATION OF AMERICA

HOME STUDY DEPARTMENT
350 West 4th St., New York 14, N. Y.

UNIT ONE

HOME STUDY

TELEVISION SERVICING COURSE

Prepared by
RCA INSTITUTES, INC.
A Service of Radio Corporation of America
350 West 4th Street, New York 14, N.Y.

Introduction

The purpose and background of this Home Study Course in Television Servicing, its organization and approach and the mailing procedure that will be followed are explained briefly in this Introduction. Read it carefully before you start to read the lessons and do the Home Assignments.

This is a practical, down-to-earth TV home study course that explains the theory and practices needed to do a good job in the daily work of installing and servicing television receivers. No extensive TV experience is necessary to take the course. It is only necessary that you be working in radio or television or have previous training in this field. A man just starting in the television field can learn the business from this home study course in TV servicing, and the experienced serviceman will also find detailed explanations of installation practices and troubleshooting techniques that will be very useful in his work. The purpose of the course is not only to help train *new* men but to make *better* television servicemen.

The course combines "how to do it" techniques field tested by practical servicemen, with "how it works" information planned and written by instructors of RCA Institutes, Inc. This highly specialized experience has produced a training course successfully employed for several years in training television technicians. Revised and expanded to include information on circuits for all the principal types of receivers, the course provides training that can be used to supplement your work on the job, from antenna installation to advanced servicing problems.

The sequence of the material parallels an apprentice's training. The course makes it possible for an inexperienced man to learn TV installation techniques first and then progress toward the problems of the service technician, including troubleshooting receivers in the customer's home, and bench work.

BACKGROUND OF THE COURSE

Development of this course was begun in 1948 to provide a training program for television service apprentices. The course *had* to be truly practical. For more than a year the writers worked side by side with apprentices, technicians and field engineers in service shops and on installation jobs. From this day-to-day study was obtained the knowledge required for a home study course directly related to the technician's job assignments. As a result of the continual contact with the work in the field, and constant re-editing to keep the material up to date, this practical television training course has been developed for the radio and television industry.

Approved by the Department of Education of New York State, the course is designed to meet the special needs of the television servicing industry.

ORGANIZATION OF THE COURSE

The entire course is presented in ten Units, each Unit consisting of several individual lessons. The first two lessons give the student in everyday language an overall picture of what the television system does and what is involved in the installation and operation of the TV receiver. Then the lessons present step-by-step procedures for installing antennas and receivers. In addition, elementary routine service work that may be necessary during an installation is explained.

Exactly what you must do in an installation, the best way to do it, the materials available, and the tools you need are explained in detail. Problems connected with satisfying the all-important customer, who pays for the work, are explained *concretely* as they are handled by a large service organization. Not only does this give you specific answers to definite problems but these procedures, which have been used successfully on a national scale, can be carried over and applied to your own service work, with appropriate modifications.

After a very detailed description of many different types of installation, including special installation problems, several lessons are devoted to a review of basic electric principles and circuits. This is necessary for a fuller understanding of the TV receiver circuits described in the later lessons.

Troubleshooting TV receivers starts with Unit Six of the Course. The lesson *Localizing Troubles* shows how to pinpoint the trouble to a section or stage of the TV receiver. Then the *Troubleshooting Techniques* that can be used to find the defective component causing the trouble are explained in detail. This material describes principles of troubleshooting that can be applied to any stage in the receiver.

The succeeding Units explain the circuits of each receiver section and the troubleshooting procedures for these circuits. A complete lesson is devoted to *Troubleshooting Low Voltage Power Supplies.* For each section of the receiver the principles of the circuits are explained first, then typical circuits and practical troubleshooting procedures are described. One topic leads to the next in the sequence of the signal as it goes through the receiver to reproduce the picture and sound. The sequence of the lessons is: *R-F Unit, Picture I-F Section and Video Detector, Video Amplifiers, AGC Circuits, Sync Circuits, Deflection Oscillators and Circuits,* and the *FM Sound Channel.* Ultra-high-frequencies and UHF converters for TV receivers for the new UHF television broadcast channels are explained in the lesson on the r-f section.

After all sections of the receiver have been explained, with the troubleshooting, this is followed by individual lessons on the important servicing problems of *Receiver Alignment* and *Methods of Reducing TV Interference.*

The use of *Test Equipment,* such as the oscilloscope, multimeter, vacuum tube voltmeter, and signal generators is thoroughly described.

APPROACH TO THE MATERIAL

In preparing this course, it has been our aim to make television intelligible to the least experienced apprentice, and at the same time to cover the subject matter thoroughly so that even the experienced technician can derive benefit from it.

We have purposely avoided trying to tell everything at once. The first time a topic is covered, only its main outlines may be indicated, leaving the details, the secondary points and the exceptions until later. Each topic may be covered several times, therefore, each time in greater detail until the whole subject has been exhausted. For this reason, you may often find yourself reading familiar material. You will find on careful reading, however, that this is done to emphasize an important point, or to expand a point previously touched on briefly. In this way, the beginner is enabled to expand his knowledge gradually, digesting the main substance of each new topic before being required to master all the refinements.

The sequence of topics has been carefully considered. It follows as closely as possible the job sequence of the newly employed apprentice. Background information is given in sufficient detail to enable the reader to grasp the reasons for the operations he is performing in his daily work, and how each operation is related to the others and to television as a whole. As the intricacy of the installation and servicing techniques discussed becomes greater, additional background material and theory are introduced gradually.

HOME ASSIGNMENTS

At the back of each Unit is printed a Home Assignment. The pages containing the Home Assignment are so arranged that they may be cut from the Unit without destroying any of the text. You are required to complete these assignments and mail them to RCA Institutes, Inc. as instructed below. Each assignment will be carefully read, corrected and graded. The corrected assignment will then be returned to you.

The first page of the Home Assignment provides spaces for you to fill in: (1) your name, (2) your address, (3) your student number, (4) your employer and (5) the date. Print your name and address so it is clearly legible. Your assignment will be returned to you in a window envelope – the address read by the mailman will be the one you write. Use your full name, not just initials. If you have moved since receiving the last Unit call attention to the fact by marking "NOTE NEW ADDRESS" at the top of the Assignment sheet.

Each assignment consists of questions of the following types: (1) multiple-choice questions, answerable by merely making marks as directed on the question sheet itself; (2) essay questions, and (3) numerical problems.

In answering the multiple-choice questions, *follow exactly the instructions printed on the question page.* Don't put down your answer in some other place than the exact place instructed. If your answer isn't in the right place the grading instructor may miss it.

Each essay question requires you to write about 100 words of well considered explanation, of a principle, operation or reasoning process. Write your answer *neatly and legibly,* on one side only of a standard (8½ × 11) sheet of paper. You may use ink, a soft pencil or a typewriter as you prefer. Number your answers to correspond with the question numbers. In writing your answer, it is equally important that you show a full understanding of the material, are able to reason correctly, and that you *express your answer clearly, concisely and completely.*

Solutions to numerical problems should also be written on one side only of an 8½ × 11 sheet. Number each solution to correspond with the printed problem.

Your solution of each problem should show clearly the various steps by which you arrive at your answer. Steps should be put down in logical sequence, with enough information in words or standard symbols to indicate exactly what you are expressing. The final answer should be clearly indicated. *It should never be necessary for the grader to guess how the problem was solved or to hunt for the answer.*

A student may receive a low grade for the correct answer if it is impossible for the grading instructor to interpret what is on the paper.

Write your name, the Unit number, and a page number in the upper right-hand corner of each additional answer sheet. The printed question pages are already numbered, starting with "1". If there are seven such pages, your first additional page should therefore be numbered "8". Secure all your answer sheets together at the upper left corner, with the first printed page on top, using a paper clip or staple. You should avoid writing too close to the upper left corner, so your writing will not be obscured by the fastening.

Mail the completed Home Assignment in the envelope furnished you, which is addressed to:

RCA Institutes, Inc.,
Home Study Department
350 West 4th Street,
New York 14, N.Y.

MAILING

This introduction is included with Unit One, which is the first of a series of ten Units that will be mailed for the complete Course. Each Unit is punched with standard holes for ring binders taking 8½ × 11 sheets. In addition, each lesson is stapled as an individual booklet, so that you can remove a lesson from the Unit to carry around with you in your work.

Unit Two will be mailed when we receive the Unit One Home Assignment. This procedure will be followed for all the Units. You should allow one to two weeks from the time you send us your Home Assignment for receipt of the next Unit.

Two to four days are normally required for the grading. Your Home Assignment for each Unit will be graded and returned to you separately by first class mail.

To avoid any unnecessary mail delays, be sure to give your correct address, and notify us of any changes. Make sure that you use enough postage when mailing us your Home Assignment. This must be mailed first class, which now requires three cents per ounce. Generally, four sheets of your Home Assignment will weigh about one ounce, so that the six to eight pages you return should require six cents postage for two ounces.

If you fail to receive the next Unit or your graded Home Assignment within a reasonable time, you may notify us directly. Give your name and address as it last appeared on the Units mailed to you, and your correct address if the old one was in error or if you have moved.

HOW TO STUDY

There is a technique to learning from books, just as there is to using a hammer or aligning a television receiver. Most of you may have been out of school for some time, and study may come a little hard at first. It is the purpose of these paragraphs to pass out a few tips that will help make studying easier, and your study time more fruitful.

First, be regular in your study. Don't leave it until the last possible moment. Set aside a definite time each day or each week to study, and then make your schedule stick. You will benefit more from a half-hour a day, every day, than from six or eight hours of study all jammed together.

Second, make sure that the conditions for study are as good as you can make them. You probably will be able to study better if you sit at a desk or table and provide a good light for the work. Quiet surroundings always helps – you can concentrate better without any distractions by other people or radio and TV programs. It pays to take the studying seriously because then you can get more done in less time.

It's a good idea to read over each lesson quickly, first. Then go back and study it carefully. In your second time through the lesson, don't skip over material that seems familiar – chances are there's at least one new point you can learn.

Just reading is *not* studying. There are several little devices that will help you to remember the material you are studying. As you come to the end of a paragraph or a section, stop and think what was its principal point. Then try to classify in your mind the various subdivisions of the information you just read. It often helps to write out, in your own words, the meaning of what you have read. When you've finished reading a major section of a lesson, it's a good idea to write out a topical outline of its contents, classifying them into main division, subdivisions and minor details.

You will sometimes come to a point you don't quite grasp, or which raises a question not answered in the text. Make a note of the point or question and watch for the answer further along in the lesson, or in a later lesson.

When you have finished a lesson, try to summarize its contents in your mind, and relate it to the information learned in previous lessons. In this way your fund of information will grow systematically into a well-rounded useful and integrated whole, rather than a hodge-podge of unrelated facts and half-facts.

Only after you have mastered the contents of each lesson, and stowed away its information in the proper mental pigeon-holes, should you tackle the Home Assignment.

◆

TELEVISION SERVICING COURSE

PREPARED BY

RCA INSTITUTES, INC.

A SERVICE OF RADIO CORPORATION OF AMERICA

HOME STUDY DEPARTMENT
350 West 4th St., New York 14, N. Y.

LESSON ONE

THE TELEVISION SYSTEM

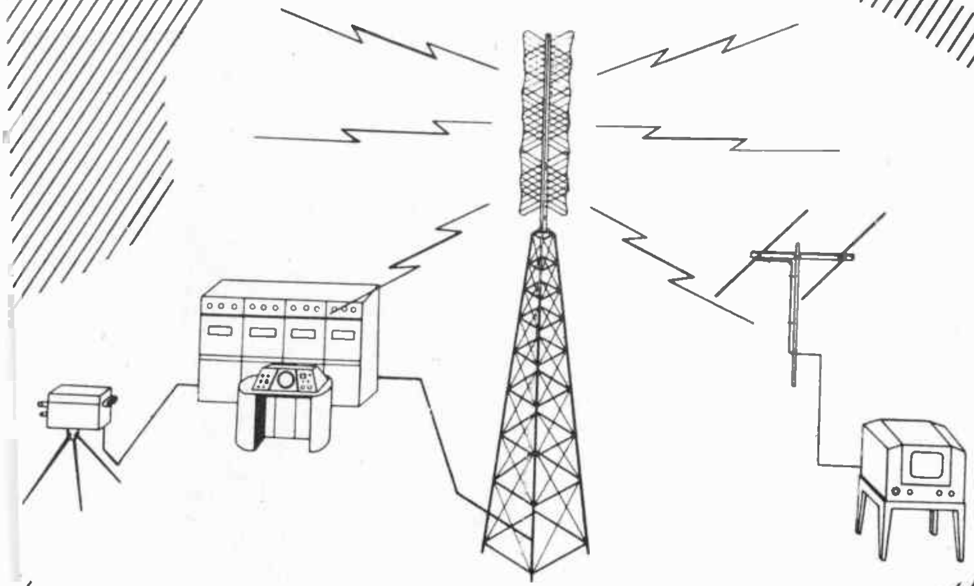

Lesson 1

This lesson is an introduction to the entire television system. In it you will learn how the picture and sound of a TV program is translated into a series of electrical impulses or signals, and broadcast over a given service area. You will then see how these electrical signals are converted by a series of circuits in the receiver to the picture and sound of the original program.

As a serviceman, you may be primarily concerned with the installation and service of TV receivers and antennas. Before studying receiver circuits, however, a basic knowledge of the formation and transmission of TV signals is necessary. In the first place, it is easier to determine whether or not a receiver is operating properly if something is known about the nature of the signals that make it function. Then, too, in the course of installation and service calls, you will be asked many questions. TV set owners are likely to be curious about many aspects of television. They may want to know how pictures can be sent all the way across the country, why all antennas aren't equally effective, and how UHF will affect them. Reasonably enough, they think you should know – and certainly you should be able to offer at least some general information.

Let's begin our study of the television system by trying to define it, in terms of what it must do. We might say that it is a combination of devices for the transmission and reproduction of stationary and moving images. Of course, it must, also transmit and reproduce the sound that accompanies these images. It is convenient to divide the complete system into two groups or sections: the transmitting section and the receiving section.

1-1. CONVERTING LIGHT TO ELECTRICITY

Suppose we first consider the operations that take place at the transmitter. The first problem is that of changing the scene or picture to be televised into some form of electrical signal. This is done by making use of the phenomenon known as *photoelectric effect.*

Photoelectric Effect. – When light strikes certain substances, it causes electrons to be emitted. This property is known as photoelectric effect. Selenium, sulfur, cesium, and many other substances display this effect, and are said to be *photosensitive.* Some materials are much more photosensitive than others, and also display different degrees of sensitivity to different colors.

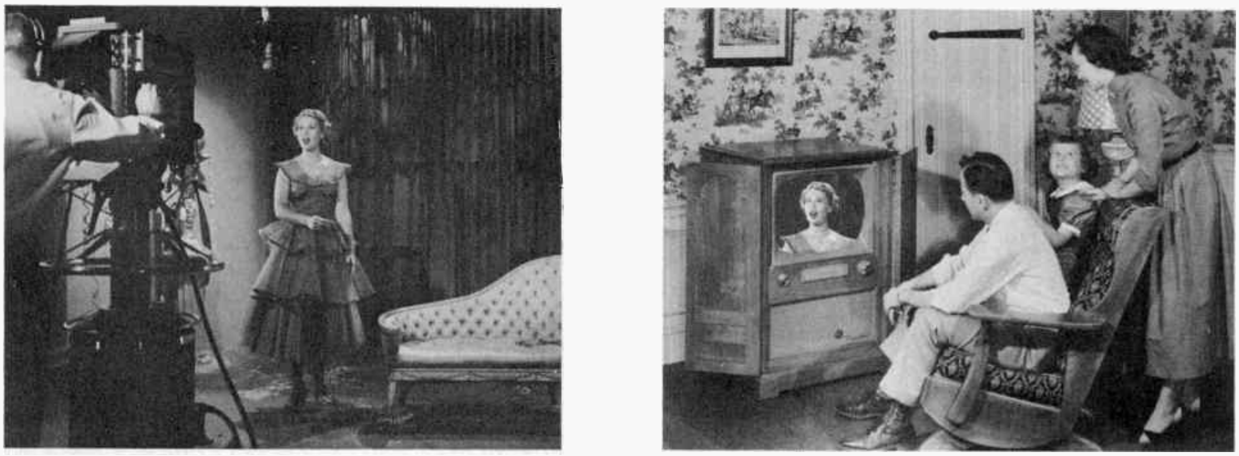

Fig. 1-1

(a) (b)

Fig. 1-2

How many electrons are emitted per seconds by a photosensitive material depends, first of all, upon the characteristics of the material. Also — and this is very important — it depends upon the intensity of the light striking it. If a light continually varying in intensity falls upon a plate coated with a photosensitive material, the number of electrons emitted by the plate will vary according to the variations in strength of the light. When the light is intense, many electrons per second will be emitted; when it is dimmer, fewer electrons will be released.

Picture Elements. — It is not practicable to reproduce instantaneously a picture or scene as the eye sees it. Instead, we must find a means of breaking the total brightness of the scene into all the tiny *variations* of light — the whites, the grays, the blacks — that make up the picture details. This can be done by dividing the scene into many tiny areas or elements. You are probably familiar with this process, which is used to reproduce photographs in newspapers and magazines. Figure 1-2*a* shows a picture reproduced by this method. Note that the picture is composed of many tiny dots. If the dots are very small compared to the size of the complete picture, the eye sees only areas of relative lightness and darkness. Parts of the picture in which the dots are large and close together appear dark; parts in which the dots are small and far apart appear lighter, or even white. Figure 1-2*b* is a small section of the same picture, enlarged to show the individual dots. It can be seen from the enlargement that any shade from black, through gray, to white, may be reproduced simply by varying the size and spacing of the dots.

Suppose that a flat plate is covered with a thin layer of a photoelectric material. If the light from a scene to be televised is focused by a lens on this plate, the photoelectric material will emit electrons, and the number of electrons released from each tiny area of the plate will be proportional to the amount of light falling on that area. Areas corresponding to very bright portions of the scene will emit many electrons; areas corresponding to dimly-lighted portions will emit fewer electrons. The net result, therefore, is a pattern of electrical charges that corresponds exactly to the variations of light on the scene.

1-2. SCANNING

The charges produced by photoelectric effect may be taken from the plate by a process called *scanning*. This means that the individual charges are taken off *sequentially*, or one after the other. Assume that an electron beam is caused to sweep very rapidly back and forth across the photosensitive surface. As each particle in turn is touched by the beam, a varying electrical current is formed. We might say that the beam is *modulated* by the charges, since it is caused to change in amplitude or strength in accordance with the relative strength of successive charges. If the photosensitive plate is divided into many horizontal lines, or strips, and the electron beam is made to sweep across each line, one after the other, a current representing all the elements of the entire line is produced. This current is known as the *video signal* or *picture information.*

The principle of sequential scanning is illustrated in Fig. 1-3. Assume that the electron beam starts at the upper left corner of the photosensitive plate, at point *A*. It sweeps across and slightly downward, to point *B*. During this sweep, or *trace,* a current proportional to the light intensity of the elements scanned is produced.

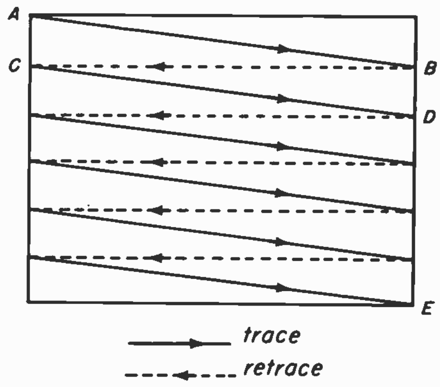

Fig. 1-3

At point *B*, the electron beam is cut off, or *blanked out,* so that no current is produced. While blanked out, it sweeps back and slightly downward to point *C*. This return sweep, or *horizontal retrace,* is indicated in the diagram by dashed lines. During the retrace, no picture information is reproduced and no current is produced. The beam then sweeps to the right to point *D*, again scanning the elements in its path. If the speed of the beam is much greater during the retrace, the intervals during which no picture information is transmitted are only a small fraction of the total scanning time. If the sweep and retrace takes place many times per second, the scanning motion becomes unnoticeable, and the effect is that of a complete picture.

Reproducing Motion. – Now suppose that when the electron beam reaches the lower right corner of the plate (point *E* in the drawing), it is again blanked out, returned very rapidly to point *A*, and caused to repeat the scanning process. By contniuing this process, a rapid succession of complete pictures are traced and converted to current variations. If the complete pictures so traced – called *frames* – are repeated rapidly enough, motion can be reproduced, just as in motion pictures. The period during which the beam is blanked out between point *E* and point *A* is called the *vertical retrace.*

Interlaced Scanning. – In practice, one refinement is added to this scanning process. Instead of tracing the entire picture or scene one horizontal line after the other, the electron beam first traces *every other line,* then returns to the top of the screen and traces the remaining lines. This method, called *interlaced scanning,* is illustrated in Fig. 1-4.

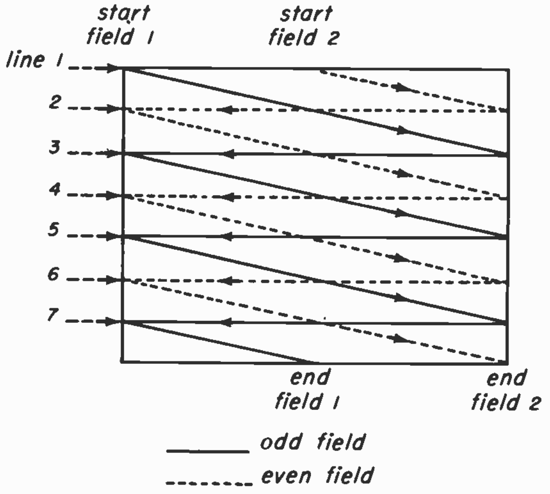

Fig. 1-4

Referring to the illustration, assume that the electron beam begins its trace at the upper left corner, marked *Start Field 1*. The beam traces the entire picture, except that it traces only every other line. When it reaches the bottom of the plate, midway between left and right, at the point marked *End Field 1*, it has traced every other line of a complete picture. This half-picture is known as a *field*. Sometimes, for the sake of convenience, it is further classified as the *odd field*, since only the odd-numbered lines are traced. In the diagram, both the trace and retrace lines of the first field are indicated by solid lines. Remember, however, that the beam is blanked out during the horizontal retrace.

The electron beam is then returned to the top of the screen, midway between left and right, at the point marked *Start Field 2*, and traces the remaining, or even-numbered lines of the picture. This half-picture is called the *even field*, since only the even-numbered lines are traced. The trace and retrace lines of this field are indicated in the diagram by dotted lines. When the beam completes the second field, it is returned to the upper left corner and repeats the scanning action. The beam is blanked out during the vertical retrace time, or when it is moving from the bottom to the top of the plate after each field.

By this method, each picture or frame is divided into two fields since it is traced twice by the electron beam. The effect is almost the same as if each frame were scanned twice as fast. This greatly reduces the effect of flicker.

Scanning Standards. – Naturally, all television stations must scan at the same rate; otherwise, receivers would not receive the pictures from all stations equally well . For this reason, the FCC (Federal Communications Commission) established a set of standards, by which all television stations are governed. Since these standards will be referred to many times in following lessons, some of the more important are listed below.

1. The scene to be televised is broken into 525 horizontal lines. Only about 480 of these carry picture information, however, since the remaining 45 lines are blanked out during the two vertical retrace times per frame.

2. The *frame frequency*, or rate at which complete pictures are scanned, is 30 per second.

3. Since the beam must trace each of the 525 horizontal lines to form one complete picture, it must sweep 525 x 30, or 15,750 horizontal lines per second. The *horizontal scanning frequency*, or *horizontal sweep frequency*, is therefore 15,750 cycles per second.

4. Since each frame is divided into two fields, the *field frequency*, or rate at which complete fields are scanned, must be twice the frame frequency, or 60cycles per second. This is the number of times per second the electron beam must sweep from the top to the bottom of the plate, and is sometimes referred to as the vertical sweep frequency.

1-3. SYNCHRONIZING SIGNALS

So far, we have seen how light can be converted into an equivalent electrical signal, and how a scene can be scanned to produce a current that varies in accordance with the light intensity of each element of the scene. One very important problem remains: to insure that the transmitted image and the image reproduced by the receiver are *synchronized*. The electron beam in the kinescope of the receiver must begin or end each scanning line at exactly the same time as the beam in the camera tube. If it does not, the picture on the receiver screen cannot be an exact replica of the scene being televised, but will appear distorted. Some means must be provided to cause the beam at the receiver to follow that of the camera tube, both horizontally and vertically. This is accomplished by *synchronizing pulses*.

Synchronizing Pulses. – Synchronizing pulses, often abbreviated to *sync pulses*, are pulses of electrical energy, generated at the transmitter. They are applied to the circuits that cause the sweep and retrace of the electron beam in the camera tube, and thus control the vertical and horizontal scanning motion of the beam. They are also transmitted *with the video signal*, and picked up with it by the receiver. In the receiver, they control the vertical and horizontal sweep frequencies of the electron beam in the kinescope, so that its position is at every instant the same as that of the beam in the camera tube.

How this control is accomplished can best be understood by considering the electron beam in the camera tube. The beam is formed in the electron-gun section of the camera tube, and focused so that the beam is of the proper size when it strikes the surface to be scanned. To provide horizontal and vertical scanning, the beam must be *deflected* up and down and across the scanned surface at the vertical and horizontal scanning rates.

In general, two methods may be used for deflection: the *electrostatic* method and the *electromagnetic* method. To establish the principle of operation, we will consider the electrostatic system. Figure 1-5*a* shows a *deflection plate* placed on either side of the electron beam. If a positive voltage is applied to plate *A*, the electrons in the beam, which are negative charges of electricity, will be attracted toward the plate. If plate *A* is made negative with respect to plate *B*, the beam will be attracted to plate *B* and repelled from plate *A*. Thus, by applying a voltage of the proper polarity, the beam can be deflected from side to side. Similarly, another pair of plates can be placed along the path of the beam to provide vertical deflection, as shown in part (b) of the figure. This permits the beam to be deflected both horizontally and vertically. By applying voltages that alternate at the proper rates to the two sets of plates, the beam can be caused to sweep the scanned surface horizontally 15,750 times per second and vertically 60 times per second.

To provide a constant or linear sweep across and down the scanned surface, and a relatively rapid retrace up and to the left, a *sawtooth* voltage is used. This is illustrated in Fig. 1-5*c*. During the slow, constant rise of voltage marked "trace", the electron beam is deflected steadily across the scanned surface. As the end of the trace is reached, the voltage abruptly reverses itself and drops rapidly to its original value, causing the electron beam to snap to the left. This is indicated in the figure by the portion of the wave marked "retrace". In the case of vertical deflection, the sudden drop in deflection voltage causes the beam to snap back to the top of the scanned surface.

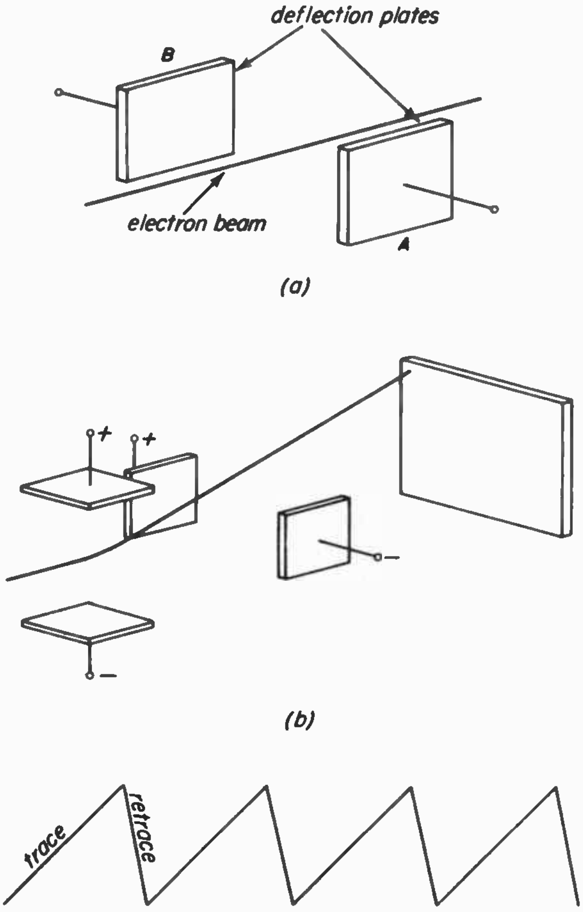

(a)

(b)

(c)

Fig. 1-5

The voltages required for vertical and horizontal deflection are generated at the transmitter by *deflection generators*. The synchronizing signals, also generated at the transmitter, are applied to the deflection circuits in such a way as to keep each deflection signal at the proper scanning frequency. Since the deflection generators at the transmitter and those that control the kinescope beam in the receiver are controlled by the same set of sync pulses, the scanning rates of the electron beam in the camera tube and that in the kinescope must remain, under normal conditions, in synchronization.

The operation of electromagnetic deflection systems is essentially the same, except that deflection is accomplished by a sawtooth *current* wave flowing through deflection coils. "The Kinescope" lesson will explain electromagnetic deflection in detail.

Blanking. – The electron beam in the camera tube is cut off during the horizontal retrace time, while it is moving from right to left across the photosensitive plate, so that no picture information is transmitted during these intervals. It is also blanked out during the vertical retrace time, while moving from the bottom of the plate to the top before beginning a new field.

In the same way, the electron beam in the kinescope of the receiver must be blanked out during horizontal and vertical retrace. This is accomplished by another set of pulses, called *blanking pulses.* They also are transmitted with the picture signal. By cutting off the electron beam in the kinescope during vertical and horizontal retrace, they prevent *retrace lines* from appearing on the screen.

How they do this is explained more fully in a later lesson; however, the general principle may be seen in Fig. 1-6. The *composite video* signal – which is the video information, synchronizing pulses, and blanking pulses – is shown for two horizontal lines, just as it is radiated from the transmitter. When the voltage applied to the kinescope reaches the amplitude indicated in the drawing as the "black level", the electron beam is cut off. Note that the picture signal itself – that part of the composite video signal that represents the details of the scene or picture – never extends above the black level; that is, it never becomes "blacker than black". Since the blanking pulses do extend to the black level, the kinescope is cut off during the width of each pulse. Note also that the sync pulses extend into the blacker-than-black region, which means that they cannot normally be seen on the kinescope.

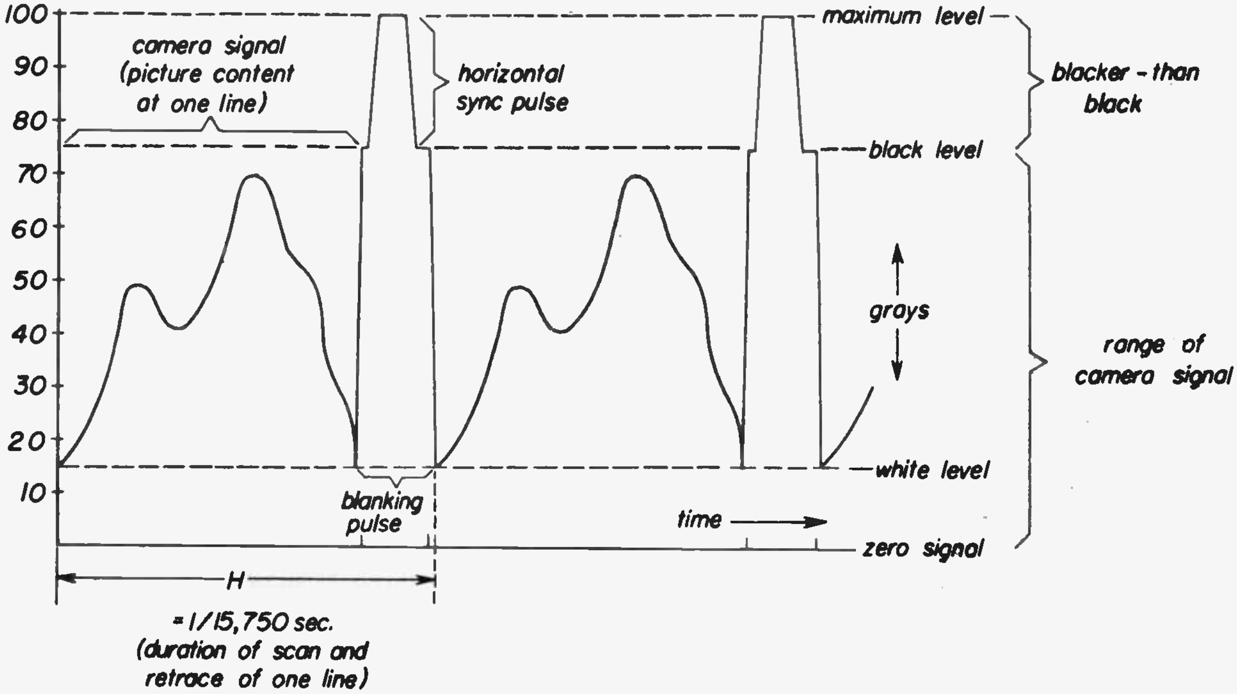

Fig. 1-6

1-4. TELEVISION CAMERAS

We have learned how light can be converted to electrical energy, how a scene can be scanned by an electron beam to produce an accurate electrical reproduction of its details, and how pulses can be transmitted to keep the transmitter and receiver in step with each other and to blank out the electron beam during vertical and horizontal retrace. Now suppose we take a closer look at the television camera itself.

In general, a television camera may be said to be composed of three parts: the *camera tube,* which includes the photosensitive plate and the electron gun which furnishes the electron beam for scanning; the *lens,* which focuses the scene to be televised on the photosensitive plate; and the *electronic viewfinder,* which allows the camera operator to see the scene he is televising just as it is to be transmitted.

Camera Tubes. – Many types of camera tubes have been developed. Each newer model, for the most part, offers certain advantages over older types. However, all utilize the same principle – that photosensitive materials emit electrons when excited by a light source. At present, the *image orthicon* camera tube is used extensively. A photograph of an image orthicon camera tube is shown in Fig. 1-7*a*, and a simplified diagram of its construction in Fig. 1-7*b*.

Briefly, the operation of the image orthicon is as follows. The scene to be televised is focused by a lens on a glass plate coated with a thin layer of photosensitive material. The variations in light from different areas of the scene cause this material to emit electrons, in amounts corresponding to the intensity of the light from each area. These electrons strike a glass target plate and cause other electrons in corresponding amounts to be dislodged from the target plate. Since electrons are negative charges of electricity, each tiny spot on the target plate from which an electron is released becomes *positive*. Thus a pattern of positive charges is established on the glass target plate, the pattern varying in accordance with the intensity of the light from each minute area of the scene. The dislodged electrons are attracted and removed by the *target mesh.*

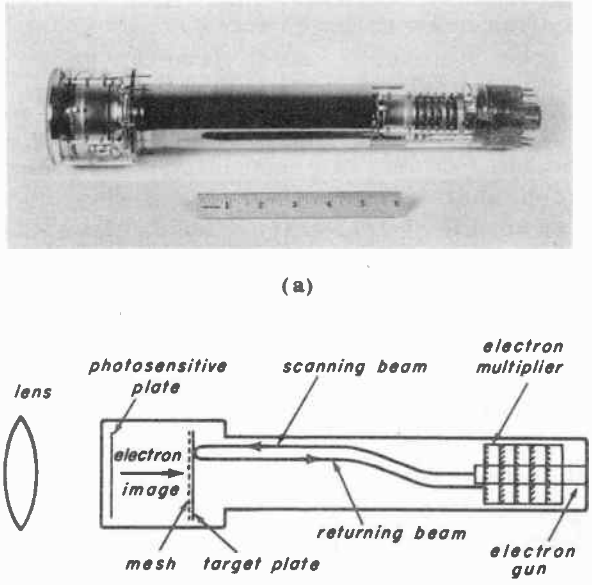

(a)

(b)

Fig. 1-7

An electron gun in the neck of the camera tube provides a very fine beam of electrons. The beam is caused to scan the target plate, using the interlace method previously discussed. Since the target plate is very thin and reasonably conductive, the positive charge pattern appears on both the lens side and the electron-gun side. As the beam scans, some of the electrons in the beam are neutralized by the positive charges on the plate, and a current that varies in accordance with the relative strength of successive charges is formed. This current is the video signal.

Lenses. – In order to focus the scene to be televised on the photosensitive plate of the camera tube, a system of lenses must be used. Many different lenses, and combinations of lenses, are used in television cameras. In fact, several may be used for a single telecast, each lens producing a particular effect. Many television cameras employ a "turret mount", which allows the cameraman to select any

Fig. 1-8

one of several lenses simply by rotating the mount. A typical turret mount can be seen in Fig. 1-8, which illustrates a television camera used for studio productions.

When distant objects must be televised, a *telephoto lens* sometimes is used. This lens has the effect of bringing far-off objects closer, much like the lens of a telescope.

At times, scenes such as room interiors must be televised. Ordinary lenses cannot always be used in such cases, since their field of focus near the camera is very narrow. Instead, a *wide-angle lens* is employed. This lens has the effect of extending the field of view of the camera to either side.

The *Zoomar* lens, which is illustrated in Fig. 1-9, is used for rapid changes from close-ups to distant shots. It is particularly useful in televising outdoor events. For instance, it may be used to make the camera "zoom" to the outfield of a baseball diamond for a close-up of a catch.

***Electronic Viewfinder*.**— So that the cameraman may see the scene he is televising exactly as it is transmitted, an *electronic viewfinder* is attached to the camera. This is actually a video monitor, which reproduces the picture information as it is transmitted.

Fig. 1-9

1-5. PICTURE AND SOUND TRANSMISSION

***Video Transmission*.**— The varying electric current taken from the photosensitive plate of the camera tube is, as we have seen, an accurate reproduction of the details of the scene being televised. However, it is extremely weak, and must be amplified many times before it can be radiated as a broadcast signal.

It is first amplified in a section of the camera tube itself. The image orthicon contains a structure called an *electron multiplier*, which amplifies the weak signal taken from the target plate many times. The signal then passes through a series of video amplifiers, sometimes referred to as a *preamplifier stage*. It is then sent, by a connecting cable or other means, to the studio control room. There it is passed through still another series of video amplifiers, and the sync and blanking pulses are added to it.

Figure 1-10 shows these steps, in block-diagram form. Note that the synchronizing signals produced by the sync generators are applied to the camera tube to control the scanning and blanking of

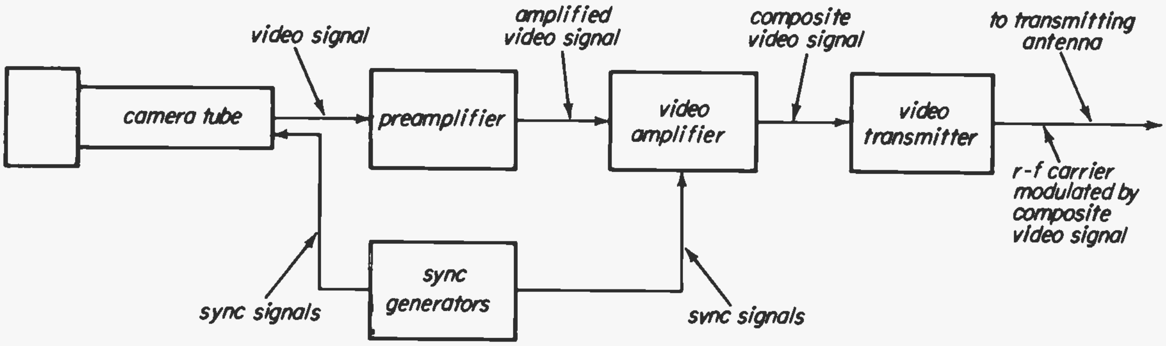

Fig. 1-10

the electron beam, and are also sent to the video amplifier stage to be added to the video signal.

The combination of picture information, sync, and blanking pulses is called the *composite video signal.* This composite signal is sent to the video transmitter. How it is sent to the transmitter depends upon the distance between studio and transmitter; usually, either special cable or a separate radio link is used. Both methods are discussed in Section 1-6 of this lesson.

Modulation of the Carrier. – The composite video signal is caused to modulate a radio-frequency carrier generated at the main transmitter. This is accomplished by the same process as that used in standard AM radio broadcasting. One important difference does exist, however; the range of frequencies containing the picture information. A bandwidth of four megacycles is needed to handle the full video signal. Thus the band of frequencies required by the video signal from just one television channel is several times wider than the band allocated to all AM broadcasting stations. Also, the carrier frequencies are much higher than those used for radio broadcasting.

Summarizing, the video output of the main transmitter is a radio-frequency carrier wave, amplitude-modulated by the composite video signal. The composite video signal includes all the information necessary to reproduce the televised scenes, including synchronizing and blanking pulses.

Sound Transmission. – The video signal is considerably more complex than the associated sound signal. Also, it is less familiar to most of us. For these reasons, we have given the video signal most of our attention so far. Now let's look at the sound, or *audio,* section of the transmitter.

The sound section of the transmitter operates much like a standard FM broadcast station. We need not go into the differences between AM and FM just now, since these are discussed fully in following lessons. Most of us know, at least, that in the case of AM, information is transmitted by varying the *amplitude* of a carrier wave, while in the FM system the *frequency* of the wave is varied. Many advantages are claimed for the frequency-modulation or FM system of sound transmission, the most important of which is less interference from noise. Because of this and other advantages, television systems transmit the sound portions of programs by FM.

Transmitting Antennas. – Both the composite video signal and the associated sound signal are usually radiated by a single transmitting antenna. This is accomplished by the use of a *diplexer;* a filter system that isolates the two signals from each, thus preventing interaction. Some transmitting antennas employ a *triplexer:* a circuit that enables a single antenna to radiate not only the video and sound signals of a television station but those of an FM broadcast station as well.

Any antenna designed for TV trans-

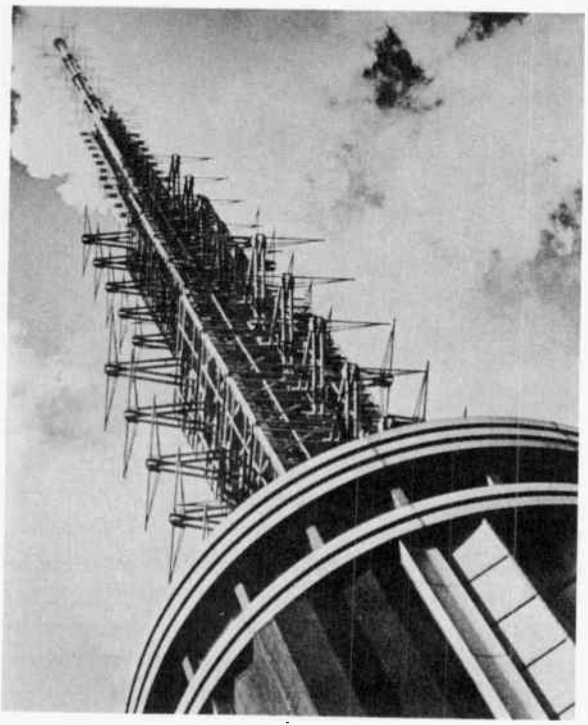

Fig. 1-11

mission must have certain characteristics. It must radiate well horizontally in all directions, and expend as little power as possible in upward radiation. It must have enough bandwidth to handle the entire band of frequencies required for the composite video signal plus the associated sound signal. Finally, it must be sturdy enough to withstand extreme weather conditions. A multiple transmitting antenna system located atop the Empire State building is shown in Fig. 1-11.

Television Spectrum. – Twelve VHF (very-high-frequency) television channels, numbered from two through thirteen, are used for commercial television broadcasting in the United States. The frequencies assigned to them by the FCC are shown in Table A. Note that a break occurs between Channels 6 and 7. The upper frequency of Channel 6 is 88 mc, and the lower frequency of Channel 7 is 174 mc. The frequencies between these two sets of channels are used by FM broadcast stations, amateurs, police, and other radio services.

TABLE A

CHANNEL NO.	FREQUENCY RANGE MC
2	54-60
3	60-66
4	66-72
5	76-82
6	82-88
7	174-180
8	180-186
9	186-192
10	192-198
11	198-204
12	204-210
13	210-216

In general, alternate channels are assigned in each city or area, to prevent interference between channels. However, Channels 4 and 5, and Channels 6 and 7, are separated in frequency. These may therefore be assigned in the same or nearby areas without danger of interference. Since the VHF channels were assigned, however, the television industry has grown very rapidly. The demand for station assignments soon outstripped the supply, since stations could not be authorized if any possibility of interference to other stations existed. This problem was solved in 1952, when the FCC authorized the use of an additional part of the radio spectrum for television broadcasting. In addition to the twelve VHF channels already assigned, seventy UHF (ultra-high frequency) channels, numbered from 14 through 83, were allocated. These channels are located in the frequency range from 470 to 890 mc. UHF channel frequencies are listed in Table B.

Basically, UHF television differs from VHF only in the frequencies used. Propagation characteristics are somewhat different at the higher frequencies, however, and antenna installation for UHF reception may be considerably more critical than for VHF. This is explained in detail in a following lesson. On the other hand, UHF offers certain advantages over VHF, notably its relative freedom from certain types of interference. Receivers designed primarily for VHF reception can receive UHF channels by the

TABLE B

CHANNEL NO.	FREQUENCY RANGE MC	CHANNEL NO.	FREQUENCY RANGE MC
		48	674-680
		49	680-686
14	470-476	50	686-692
15	476-482	51	692-698
16	482-488	52	698-704
17	488-494	53	704-710
18	494-500	54	710-716
19	500-506	55	716-722
20	506-512	56	722-728
21	512-518	57	728-734
22	518-524	58	734-740
23	524-530	59	740-746
24	530-536	60	746-752
25	536-542	61	752-758
26	542-548	62	758-764
27	548-554	63	764-770
28	554-560	64	770-776
29	560-566	65	776-782
30	566-572	66	782-788
31	572-578	67	788-794
32	578-584	68	794-800
33	584-590	69	800-806
34	590-596	70	806-812
35	596-602	71	812-818
36	602-608	72	818-824
37	608-614	73	824-830
38	614-620	74	830-836
39	620-626	75	836-842
40	626-632	76	842-848
41	632-638	77	848-854
42	638-644		
		78	854-860
43	644-650	79	860-866
44	650-656	80	866-872
45	656-662	81	872-878
46	662-668	82	878-884
47	668-674	83	884-890

addition of tuning devices that will select the higher-frequency channels. This may be accomplished by either of two methods: the use of *selectors*, which are external tuning units, or by UHF inserts added to the tuners of receivers having provision for such inserts.

1-6. PROGRAM SOURCES

Television programs may originate in the main studio, or at points far removed from the studio. They may also originate "canned" as motion-picture films or kinescope recordings. A typical "live" studio production is shown in Fig. 1-12.

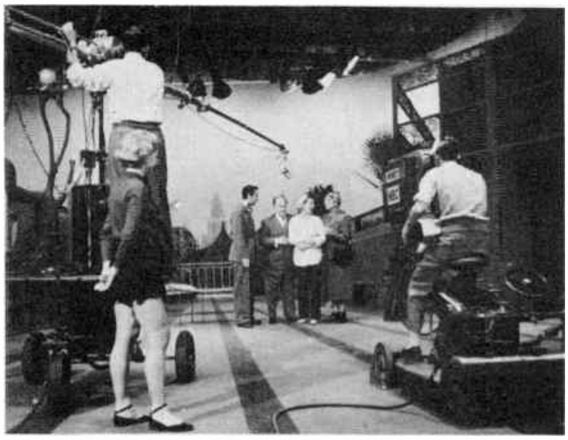

Fig. 1-12

Portable Equipment. – Mobile units, which contain almost as much equipment as a small studio, are used to provide coverage of events removed from regular facilities, such as parades, disasters, and sports events. Figure 1-13 is a photograph of an RCA mobile transmitter truck used for spot-news coverage.

Fig. 1-13

Such mobile units often use two or more cameras. They also contain switching units, power supplies, synchronizing generators, and other equipment. This equipment, including the television cameras, is basically the same as that for studio programs, except that it may be lighter, more rugged, and more compact.

The composite video signal from a mobile unit is sent to the control room of the main studio by *coaxial cable* or *micro-*

wave radio. If the scene of the telecast is not too far from the studio, coaxial cable is used. For more remote telecasts, the video output of the mobile unit may be sent to the main studio by a microwave-radio link. In this method, the video signal produced and amplified in the camera tube is broadcast directly to the main studio, where it is picked up by a receiving antenna, amplified further, and re-broadcast by the main transmitting antenna.

This is made possible by the extremely high frequencies involved in microwave transmission, which permit sending the video signal as a very narrow, concentrated beam, aimed directly at the receiving antenna of the main transmitter. This is, of course, exactly the opposite effect from that produced by the main transmitting antenna, which radiates the broadcast signal over as wide an area as possible. A typical microwave transmitting antenna, used for mobile telecasts, is shown in Fig. 1-14.

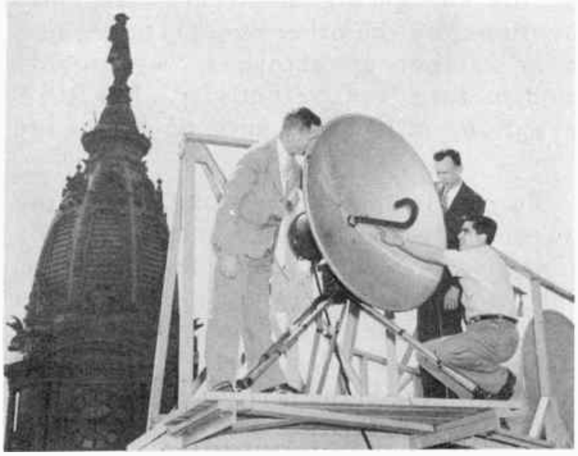

Fig. 1-14

***Radio Relays*.**– Both coaxial cable and microwave-radio links are used to relay television programs, so that cities many hundreds of miles apart may receive telecasts originating in other stations. In the case of radio relays, a system of repeater stations is employed. The program to be relayed is transmitted by microwave radio from one station to the next. Since microwave frequencies can be used only for short distances, many repeater stations are needed – usually, one every twenty or thirty miles along the distance to be covered. Frequently these repeater stations are completely automatic, in that no operators are needed to control them except for maintenance checks and emergency repairs. The signal received from one such station is automatically retransmitted to the next station.

***Film Pickups*.**– Motion-picture films are used extensively as television material. However, since the frame frequencies for motion-picture films are not the same as those used for television scanning, special projectors are needed. The film studios of large stations usually include projectors for televising 16- and 35-mm films and stationary slides.

***Kinescope Recordings*.** – It is also possible to make films directly from the kinescope of a receiver. The sound portion of the program is recorded on the film at the same time. By using these recordings, stations may reproduce programs originating in other stations, to which they are not connected by cable or radio.

1-7. FUNCTIONS OF THE RECEIVER

Now that we have seen how a scene and the associated sound is converted to an electrical signal that can be broadcast by a transmitting antenna, let's look at the other end of the television system: the receiver.

For convenience, a receiver may be considered to be made up of a number of sections, each section performing a definite function or functions, and usually associated with one particular part or form of the composite video signal For instance, the r-f unit or tuner section selects, amplifies, and converts the r-f signal entering the receiver; the sync section deals primarily with the sync signals; and so on. Other lessons of this course take up each section individually, including both theory and troubleshooting.

First, however, a knowledge of the overall operation of the receiver is necessary. This is presented in the following paragraphs, which consider the general requirements of each section and how they are met.

Roughly, a television receiver may be said to have seven major functions.

1. From the signals picked up by the antenna, it must accept those from the channel to be received, and reject those from other channels.

2. The picture information, sound information, and synchronizing signals must be separated from each other and fed to the proper circuits.

3. The video signal, which contains the picture information, must be amplified, detected, and applied to the kinescope.

4. The vertical and horizontal deflection signals must be developed and applied to the kinescope.

5. The synchronizing signals must be amplified, separated into horizontal and vertical signals, and applied to the deflection circuits.

6. The sound signal must be amplified, detected, and applied to the loudspeaker.

7. The proper operating voltages must be supplied to all stages.

These functions are illustrated in the block diagram of Fig. 1-15. In this diagram, receiver operating controls, and adjustments that are normally made or checked at the time of installation, are indicated by appropriate symbols.

It should be noted that controls and adjustments are not the same in all receivers. Some receivers, for instance, use a variable resistor for the horizontal drive adjustment; in other receivers it is a variable capacitor, as shown in Fig. 1-15. For exact circuitry, the Service Data for the receiver should be consulted.

The Antenna. – The composite video signal and the sound signal, as we have seen, are transmitted in the band of frequencies allotted to one channel, usually by a single transmitting antenna. The function of the receiving antenna is, of course, the reception of these signals.

To provide adequate reception of picture and sound, the receiving antenna must meet several requirements, some of which differ with the location of the receiver and the stations to be received. It may be necessary to pick up signals from stations widely separated in direction, from stations so far distant that very little of the radiated signal reaches the receiving antenna, and from stations widely separated in frequency. At the same time, the antenna must be directive enough to eliminate or at least reduce interference from reflected signals. To meet these contradictory requirements, various types of antennas and antenna mounts are used. In most areas, a simple dipole with reflector will provide a suitable signal. However, in areas farther from the transmitter, high-low combinations, conicals, or even stacked arrays may be necessary to provide the necessary gain and directivity. In fringe areas, it is frequently necessary to erect tall masts or towers to provide enough signal strength. In some locations, on the other hand, simple built-in or cabinet-top antennas may provide enough gain and selectivity. For UHF reception, still other antenna types are used.

To couple the signal picked up by the antenna to the receiver some form of *transmission line* is used. Transmission line, which may be either a pair of conductors insulated from each other or coaxial cable, is designed to carry the signal from the antenna to the r-f unit of the receiver with as little loss as possible.

The R-F Unit. – The r-f unit of a receiver, often called the *tuner* or *front end,* performs a number of functions. First, it must accept the signals of the channel to which the receiver is tuned. At the same time, it must reject all other signals. The ability of the r-f unit to reject unwanted signals is known as selectivity; this term is used in television just as it is in radio.

The r-f unit also provides some amplification. This usually takes place in a

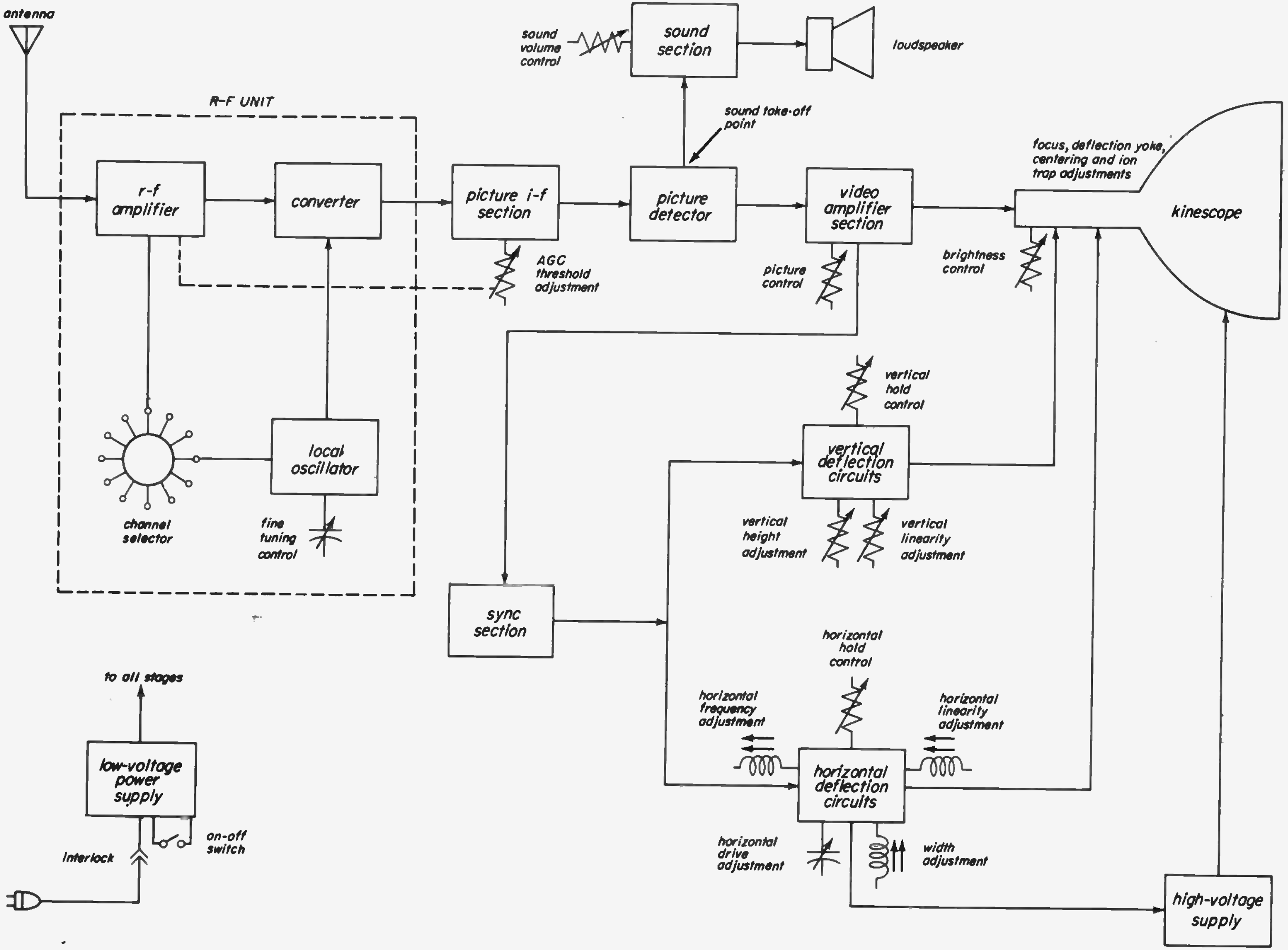
antenna
R-F UNIT
r-f amplifier
converter
channel selector
local oscillator
fine tuning control
picture i-f section
AGC threshold adjustment
sound volume control
sound section
loudspeaker
sound take-off point
picture detector
video amplifier section
picture control
focus, deflection yoke, centering and ion trap adjustments
kinescope
brightness control
vertical hold control
vertical deflection circuits
vertical height adjustment
vertical linearity adjustment
sync section
horizontal hold control
horizontal frequency adjustment
horizontal linearity adjustment
horizontal deflection circuits
horizontal drive adjustment
width adjustment
high-voltage supply
to all stages
low-voltage power supply
on-off switch
interlock

Fig. 1-15

single stage. The amplified r-f signal is fed to the *converter*, where it heterodynes with an r-f signal generated in the *local oscillator*. This process is the same as that which takes place in the converter stage of any superheterodyne receiver. The result is also the same: an intermediate-frequency, or *i-f*, signal is produced. At present, two intermediate frequencies are in common use: 41 mc (41.25-mc sound i-f and 45.75-mc picture i-f) and 21 mc (21.00-mc sound i-f and 25.5-mc picture i-f).

The CHANNEL SELECTOR, indicated in the diagram by a multicontact switch, switches in tuned circuits, so that at each position of the switch the beat frequency between the incoming r-f signal and the local-oscillator signal is the intermediate frequency of the receiver. For example, when the Channel Selector is at the Channel 2 position, the local oscillator of sets using a 41-mc i-f is at 101 mc. The differences between 101 mc and the Channel 2 sound and picture carriers (55.25 mc and 59.75 mc) are 41.25 mc and 45.75 mc, the sound and picture i-f's of the receiver.

The FINE TUNING CONTROL, shown as a variable capacitor, varies slightly the frequency of the local oscillator, making possible a more precise adjustment than can be attained with the Channel Selector.

The r-f section of a television receiver usually is a self-contained unit, mounted on its own subchassis. This affords additional shielding and prevents radiation by the local oscillator, which might otherwise occur. A photograph of the RCA KRK-12, a combination VHF-UHF, turret-type tuner, is shown in Fig. 1-16.

The Picture I-F Section. -- The output of the converter is an intermediate-frequency signal carrying both sound and picture information. It passes to the picture i-f section, in which it is amplified. Most of the signal amplification of the receiver takes place in this section. The amplified i-f signal is fed to the *picture detector* (which may be either an electron tube or a germanium diode) where it is detected. The output is an amplified version of the original video signal. At the *sound-takeoff* point, the sound signal is separated from the video signal and fed to the sound circuits. The remaining portion of the composite video signal, containing the picture information and sync and blanking pulses, is passed to the video amplifier stage.

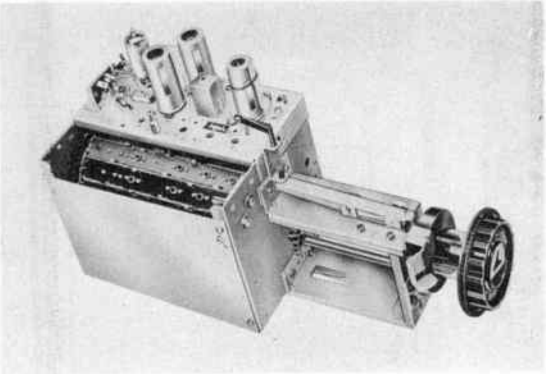

Fig. 1-16

The output of the i-f amplifiers is kept relatively constant over a wide range of input signals by an AGC (automatic-gain-control) circuit, which increases the gain of the i-f and r-f amplifiers for weak signals and decreases it for strong signals.

The Video Amplifier Section. -- The video signal at the output of the picture detector is still not strong enough to drive the kinescope. Therefore, it is amplified further in one or more video-amplifier stages. Since the video signal covers a range of about 4 mc, the video amplifiers must pass this band of frequencies without undue distortion. The output of the video amplifier section, which includes the video signal and the blanking pulses, is applied to the kinescope. The PICTURE CONTROL governs the contrast of the picture: the difference in intensity between light and dark portions of the picture. It does this by controlling the signal level to the kinescope. The synchronizing signals are separated from the composite video signal by *sync separator* circuits in the *sync section*.

Synchronizing and Deflection Circuits.

– The synchronizing pulses fed to the sync section from the video amplifier are separated into horizontal sync pulses and vertical sync pulses, amplified, and applied to the deflection circuits.

The deflection circuits provide the current that moves the electron beam in the kinescope across and up and down the screen. Two signals must be generated: the *vertical deflection signal,* which moves the electron beam vertically, and the *horizontal deflection signal,* which moves the beam horizontally. These signals are generated by *deflection oscillators.*

The VERTICAL HOLD CONTROL, indicated on the diagram by a variable resistor, adjusts the vertical oscillator frequency to the vertical repetition rate of 60 cycles per second. The output of the oscillator, which is the sawtooth waveform required for vertical scanning, is amplified and fed to the vertical deflection coils, which control the scanning of the electron beam in the kinescope. The VERTICAL HEIGHT ADJUSTMENT adjusts the height of the raster, by increasing or decreasing the input to the output amplifier tube. The VERTICAL LINEARITY ADJUSTMENT governs the vertical linearity of the raster, usually by varying the bias on the vertical amplifier tube.

The horizontal oscillator operates at a frequency of 15,750 cycles per second, the horizontal scanning frequency. The output of the oscillator is amplified and fed to the horizontal deflection coils. The HORIZONTAL HOLD ADJUSTMENT allows adjustment, over a limited range, of the oscillator frequency. Coarser adjustments are made with the HORIZONTAL FREQUENCY ADJUSTMENT, which is usually a tuning slug in the core of the oscillator coil.

The deflection oscillators are controlled by the vertical and horizontal sync pulses. Therefore, the rate of scanning at the receiver is the same as that at the transmitter.

The WIDTH ADJUSTMENT is a variable control across part of the horizontal output stage. It allows adjustment of the width of the raster. The HORIZONTAL LINEARITY ADJUSTMENT permits slight changes in horizontal linearity.

An additional function of the horizontal deflection circuits is that of supplying high voltage for the kinescope. The HORIZONTAL DRIVE ADJUSTMENT, shown in the diagram as a variable capacitor, controls the amount of high voltage supplied. It is used to obtain the brightest possible picture consistent with good linearity.

The Kinescope. – We learned while discussing the camera tube at the transmitter that certain substances emit electrons when struck by light, and that this property is used in converting light to electricity. At the receiver, this process is reversed, and the electrical signal is converted back to light to produce a picture on the kinescope screen. Therefore materials that emit light when struck by electrons are used. This property of emitting light when struck by electrons is called *fluorescence.*

However, in order to trace a picture on the screen of a kinescope, we need a material that not only emits light when struck by electrons, but that continues to glow after the beam is removed. This property is called *phosphorescence.* For picture tubes, materials that continue to glow just long enough to give the impression of a complete picture on the screen are used.

We know that a great deal of light causes more electrons to be emitted from a photosensitive plate than only a little light. In the same way, many electrons striking the fluorescent screen of the kinescope cause it to glow more brightly than just a few electrons. Thus, by allowing the video signal, which is a varying electric signal, to control the number of electrons striking the kinescope screen, we can reproduce the light and dark elements of the original scene.

The major portions of a kinescope and its associated parts are shown in Fig. 1-17.

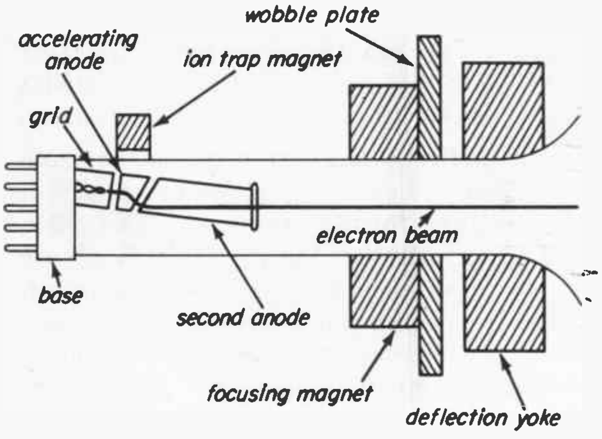

Fig. 1-17

The Electron Gun. – The *electron gun,* which is mounted in the neck of the tube, provides a continuous supply of electrons. These electrons pass through a tiny hole in the grid of the tube, and are formed into a narrow beam. This beam is given a high velocity by an *accelerating anode,* and speeded up even more in its passage toward the screen by a second, or *high-voltage,* anode. Thousands of volts are applied to this second anode, to give the electron beam the extremely high speed needed to excite the fluorescent material of the screen.

Focusing. – To produce the very small spot of light needed to trace out the details of the picture, the electron beam must be focused. This may be done by one of two methods: *magnetic or electrostatic.* Both systems are used in modern kinescopes. The electrostatic method usually involves the use of a special focusing electrode in the gun of the tube. A focusing voltage, applied to this electrode, controls the focus of the beam.

Electromagnetic focusing is also used. In this method, the electron beam is focused by causing a current to flow through a focus coil. More often, however, permanent magnets are employed. An iron ring, or magnetic shunt, is mounted so that it can be moved back and forth along the neck of the tube. This provides the focusing adjustment. The position of the focusing magnet is shown in Fig. 1-17. If electrostatic focusing is used, no such ring or coil is necessary.

Deflection. – The focused beam must be swept across and up and down the the screen to provide the scanning action that traces out the picture. This is done electromagnetically in most modern picture tubes, although some kinescopes use an electrostatic method. The electromagnetic method requires a deflection current through a deflection yoke, and the electrostatic method requires a deflection voltage applied to deflection plates.

The deflection yoke shown in Fig. 1-17 contains two sets of coils: one set for horizontal deflection and the other set for vertical deflection. Current passing through them sets up magnetic fields, which cause the electron beam to be deflected vertically and horizontally. This current is produced by the deflection generators. We have seen that the timing of these generators is controlled by the synchronizing pulses transmitted with the video signal. Since the current produced by the deflection generators, applied to the deflection coils, controls the movement of the electron beam, the beam must remain in step or synchronization with the beam in the camera tube.

Ion-trap Magnet. – The *ion-trap magnet* used with many kinescopes prevents the formation of *ion spots* or *burns* on the screen. How ion burns are formed and how the ion trap eliminates them is discussed in "The Kinescope" lesson.

Centering Control. – To center the raster on the kinescope screen, some kinescopes use a *wobble plate* in conjunction with the focus magnet. The position of this plate is shown in Fig. 1-17. In some electromagnetic-focus types, centering is accomplished by adjusting the position of the focus coil.

Operation. – We now have seen that an electron beam may be focused to form a spot of light on the fluorescent screen, and deflected to provide a scanning pattern. With no video signal applied, this results in the *raster* – a rectangle of white light on the screen.

To reproduce the light and dark areas of the picture being televised, the intensity with which the electron beam strikes the fluorescent screen must be varied, so that the screen will glow brightly, less brightly, or not at all, depending upon the picture elements being reproduced. This is done by applying the video signal – which, as we know, is a constantly varying electrical signal – to the grid or cathode of the kinescope. Since the electron beam, to reach the screen, must pass through a small hole in the grid, the video signal can control the number of electrons that reach the screen. When a light area of the picture is being scanned, the video signal lets many electrons strike the the screen, and the screen glows brightly. When a very dark area is being scanned, the video signal cuts off most or all of the electrons in the beam, and the screen glows very dimly or not at all. In this way, the electrical signal produced by the camera tube is re-converted to light, tracing out pictures or scenes on the kinescope screen. The BRIGHTNESS CONTROL, indicated in the diagram by a variable resistor, governs the amount of d-c bias applied to the kinescope, and therefore the *over-all brightness* of the picture. Note the difference between this control and the PICTURE CONTROL, which varies the signal level applied to the kinescope and thus the *contrast* of the picture. A typical picture tube is shown in Fig. 1-18.

The Sound Circuits. – The sound circuits of a television receiver are, for the most part, the same as the circuits of an FM radio receiver. Although separate carriers are used for the sound signal and the composite video signal, they are both within the band of frequencies of one television channel, and both are accepted by the r-f section of the receiver. The sound signal is amplified in the r-f section, converted to a sound intermediate-frequency signal, and fed to the sound section of the receiver.

Two general types of sound systems are in use: the *intercarrier* type and the *dual i-f,* also called *split-sound,* type. An entire later lesson is devoted to sound systems; therefore only the major differences will be pointed out at this time.

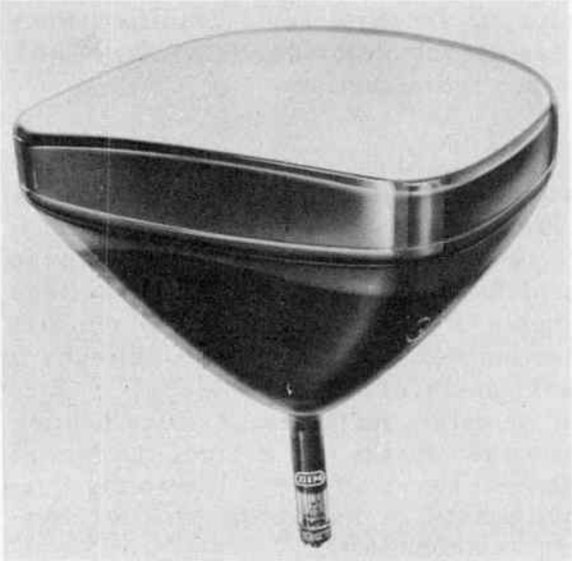

Fig. 1-18

In dual i-f receivers the picture i-f signal and the sound i-f signal are amplified separately. The tuned circuit by which picture and sound are separated may be at the output of the mixer or following the first or second picture i-f stages. After passing through the sound i-f amplifiers, the sound signal is detected, amplified in an *audio* stage or stages, and fed to the loudspeaker.

In intercarrier sets, the picture and sound i-f's are amplified *together,* in common i-f stages. Sound is taken off after the picture detector, and fewer sound i-f amplifiers are therefore required. In *all* intercarrier sets, sound and picture are separated by a 4.5-mc trap, since the sound carrier is exactly 4.5 mc away from the picture carrier. The other important differences between intercarrier and dual i-f receivers will be discussed in the "FM Sound Channel" lesson.

No matter which system is used, the amplified i-f signal is passed to a sound detector. The output of the detector, just as in radio receivers, is an audio-frequency, or *a-f,* signal. Two types of detectors are in general use: the *ratio detector,* and the *discriminator.* The output of the detector is amplified and applied to the loudspeaker. The SOUND VOLUME CONTROL is simply a potentiometer that varies the amount of audio voltage applied to the first audio amplifier. Many receivers also provide a TONE CONTROL in the audio section.

Power Supplies. – The low-voltage supply is similar to that of a transformer-type a-c radio receiver. A power transformer with several secondary windings supplies the voltage for the low-voltage supply and tube heaters. The rectifier section is usually a full-wave circuit; it may consist of one or more rectifier tubes or selenium rectifiers. A filter section smoothes out the ripple. Since the various stages have different low-voltage requirements, a voltage-distribution system is necessary.

Most modern receivers use the *fly-back* or *kick-back* method to provide the high voltage necessary for the kinescope. This method makes use of the sharp change in scanning current required for horizontal retrace. The high voltage developed across the horizontal output transformer by the sudden change in scanning current is stepped up, rectified, filtered, and applied to the kinescope.

1-8. SUMMARY

This has been a very general picture of the television system: a sort of guided tour of the system as a whole. Now that you understand the fundamentals of picture and sound transmission, and are acquainted with some of the more common terms, you are ready for the more practical, detailed information presented in the lessons to follow.

To be sure that we haven't missed any important steps in the chain of operations from transmitter to receiver, let's follow the paths of the sound and picture signals in the block diagram of Fig. 1-19. The operations that take place are summarized in the following paragraphs.

1. The details of the scene to be televised are converted, in a camera tube, to a constantly varying electrical signal. This video signal is amplified in a preamplifier stage. Scanning and blanking rates of the electron beam in the camera tube are controlled by synchronizing and blanking pulses applied to the camera deflection circuits. At the same time, the associated sound is picked up by a micro-

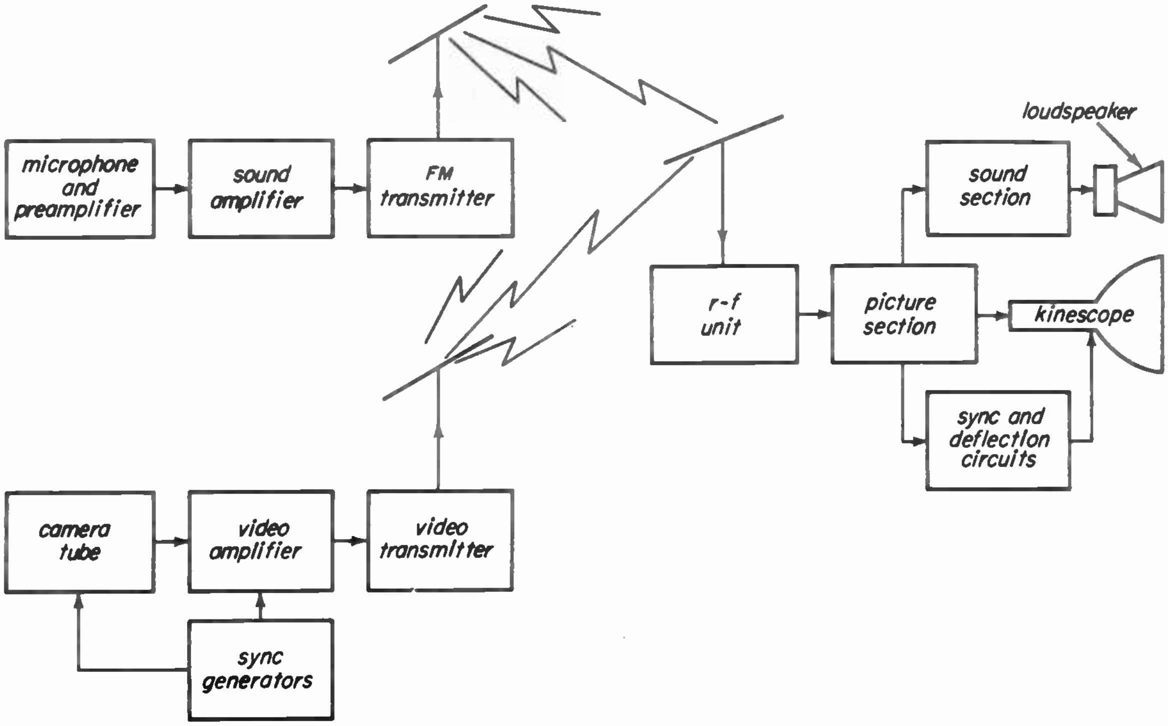

Fig. 1-19

phone, converted to an electrical signal, and amplified in a preamplifier stage.

2. The signals carrying picture and sound information are amplified.

3. The amplified sound and composite video signals are sent to the main transmitter. The sound signal is caused to frequency-modulate a carrier wave, and the composite video signal to amplitude-modulate another carrier wave. Both are radiated in the band of frequencies allotted to one television channel.

4. The transmitted signals are picked up by the receiving antenna, and coupled to the receiver by a transmission line.

5. The r-f unit of the receiver accepts the signals from the channel to which it is tuned, rejecting signals from all other channels. The signal is amplified, and caused to heterodyne with an r-f signal generated by the local oscillator, producing an i-f signal. This i-f signal contains the composite video signal and the sound signal.

6. In intercarrier sets, the sound and picture i-f's are amplified together in a series of picture i-f amplifiers. The sound signal is separated by a trap, amplified further in one or more sound i-f amplifiers, detected, and fed through an audio amplifier section to the loudspeaker.

7. The video signal is detected, amplified in a video amplifier section, and applied to the kinescope. The blanking pulses are also applied to the kinescope.

8. The synchronizing signals are separated, amplified, and applied to the vertical and horizontal deflection circuits to control the scanning rates of the kinescope.

◆

NOTES

NOTES

NOTES

TELEVISION SERVICING COURSE

PREPARED BY

RCA INSTITUTES, INC.
A SERVICE OF RADIO CORPORATION OF AMERICA

HOME STUDY DEPARTMENT
350 West 4th St., New York 14, N. Y.

LESSON TWO

RECEIVING THE PICTURE SIGNAL

Lesson 2

THE AIM OF AN INSTALLATION JOB.

2-1. The aim of every installation job is a *satisfied customer.* Seems pretty obvious, doesn't it, when you come right out and say it? It's very easy for all of us to think about the job of installing a television receiver as a minor engineering problem – how to get the antenna fastened up on the peak of the roof, what kind of transmission line to use, or which way to point the antenna for best reception. Those are all part of it, of course, but they're just means to an end. And the end objective of all the engineering – from the design engineers and the broadcasting station engineers right through to *you* – is to make a *satisfied customer.*

Customer Satisfaction. – You'd be surprised how many ways there are of making a *dis*satisfied customer. Some of them have little or nothing to do directly with the actual installation itself. If you appear at the customer's door with a two-day growth of beard, or if you track mud across the living room rug that just came back from the cleaner's, or if your ladder slips and falls into the customer's pet rose bush, or ... well, you get the idea. If any of those things, or hundreds of others, happens, your name is *mud,* and the customer is unlikely to like your installation job even if it *is* good. So of course, you just don't *let* such things happen.

Whether you work for a large company, or operate a small television service of your own, you should think about such matters as a part of *customer relations,* and recognize them as an extremely important part of your job. We'll have more to say about customer relations in this and other lessons, and we'll have one entire lesson devoted to gathering together all the little things to keep in mind under that heading. But we can summarize the whole thing as – *neatness and courtesy.* Those are the two things housewives appreciate most. And so far as we're concerned, it is the housewife – who is usually the one home when the serviceman shows up – whom you have to please.

However, we *do* have an installation job to do, so let's get on with it. Aside from behaving in a manner calculated to keep the customer on friendly terms, what do we have to do to make her – or him – a satisfied customer?

What Is a Good Picture? – What she wants and expects from a television set is a *good picture* – at all times, and on all stations. Sometimes that's a large order, but it is our job to come as close to it as possible. But what constitutes a good picture? That is the subject of the next numbered section of this lesson, in which we'll go into such matters as focus, aspect ratio and linearity. But for now, let's stick to describing a good picture in layman's language – the terms in which the customer thinks of it.

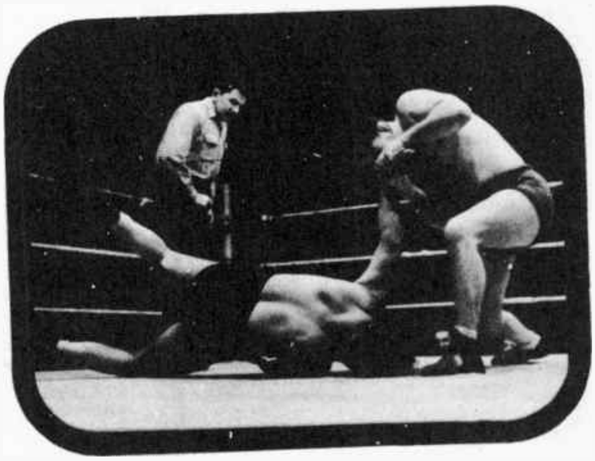

Fig. 2-1

In the first place, he (and from now on, we mean he *or* she) wants to be able to tune in any station within reasonable range of his receiver, without too much fiddling with dials. He wants the picture to stand still on the screen, and to show as much detail of the scene being televised as possible. It should be clear and sharp; when DiMaggio smacks the ball, he wants to be able to follow it with his eyes and see where it goes; or when a lovely lady smiles, her mouth should show a lovely smile and not look like the entrance to Mammoth Cave. He also wants the lady's shape to be as nature designed it, and not as it might appear in one of those curved mirrors they put in amusement parks. He wants the picture to be free from those jagged rips, herring bone patterns, snowstorms and meandering dark streaks that so delight the cartoonists these days, but give no pleasure to anyone else. He wants the picture to be as big as possible, in natural-looking tones of black, gray and white. And he'd like it to be visible from any part of his living room.

Presently, we'll translate these wishes of the customer into terms of adjustments on the receiver appropriate to produce the desired results. But right now we're just getting a preview of our job. And a part of that preview is an important idea on how the installation job finally got accomplished. That idea is *team work.*

Teamwork in Television. – In a sense, every television technician is a member of a team. This teamwork idea extends all the way from the inventors and design engineers, right through the production staff at the factory, the broadcasting personnel, including the people who put on the programs, to the dealer, to YOU, and finally, to the customer. This is true because essentially, you are all vitally interested in one final purpose to provide pleasing, satisfying television service to the customer. The customer *wants* this kind of service, and from one viewpoint he is the most important member of the team. He pays the bills! And right next to him in this teamwork chain is you, for you are the fellow who installs the set, the final act that puts the whole television system in operation for his enjoyment. Also, and perhaps most important of all, you're the man he calls in when something goes wrong, the time when he's most likely to be dissatisfied.

Naturally you're not expected to take care of all the customer's difficulties by yourself. You are really backed up by other members of the team, all the way from your partner on the installation job (if you have one) back to the people who make the sets, the designers, and to some extent everyone connected with the business of bringing satisfactory television to the public. All these people (including the writer of these words) are getting their daily bread and butter from television, and thus have a good personal reason for wanting to help you.

However, some people on this team are in a better position to help you directly than others. Every maker of television receivers and accessories has full information about installation and repair of his products that is available to you. This can be obtained either directly from the maker, through the distributor, or through one of the firms specializing in providing such information, such as John F. Rider Publisher, Inc., or Howard W. Sams & Co., Inc. There are also many magazines and service publications that provide up-to-date information on new methods and short-cuts in television installation and service. All these things are a part of the industry's team effort, and all you have to do is take the information and apply it in a common-sense way.

The whole development of television broadcasting has been a record of teamwork. The inventors and designers, the manufacturers through the Radio and Television Manufacturers Association (RTMA), and the government through the Federal Communications Commission (FCC) have cooperated in establishing the present uniform standards, so that any receiver in the whole country can receive any broadcast program, providing only that the signal from the transmitter reaches the receiving antenna in sufficient strength. We accept this as commonplace, yet in Europe widely differing standards are found within small geographical areas. Imagine if you can the situation if Ohio, Indiana, and Kentucky all had different television standards!

Admittedly, your job has headaches, for you are on the firing line, so to speak. It is you whom the customer sees during the installation, and you who gets called in when something goes wrong. It takes a good man to handle your job. But even the best man should make full use of the help his teammates can provide. Make sure you keep familiar with the makers of service data on the receiver or accessory you are working on, and contact the distributor or some other source for more information when you need it. Remember, nobody can help you if you don't let them know you *need* help.

REQUIREMENTS FOR A GOOD PICTURE

2-2. To get back to that "customer relations" angle again, you'd be surprised how super-critical Mrs. Customer can get about the picture quality if you've carelessly backed into a favorite lamp, or left dirty hand marks on a clean painted wall. Conversely, if you have impressed her as a considerate, courteous and careful young man, she's a lot more likely to accept what you say is the best picture that can be gotten on her new television receiver.

What Is a Good Picture? – Not every customer has a very definite idea of what to expect of the picture. But unless he gets a good picture, he won't be satisfied. This is true even though he only knows that it doesn't look as good as Neighbor Jones gets across the street. So we can't just depend on the customer to tell us when the picture is good enough. We have to have some definite standards of our own. If anything, we should be even more critical of picture quality than the customer. So let's see what some of these standards of judgment are.

When everything is properly adjusted, we can expect the test pattern to look sharp and clear like this:

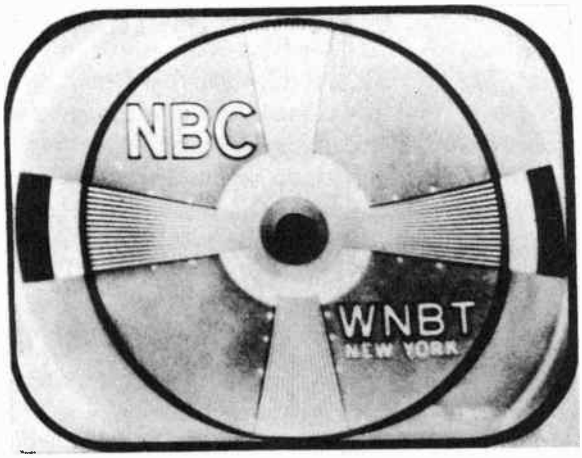

Fig. 2-2

If the receiver is not properly *focused*, however, the pattern will be blurred all over, like this:

Fig. 2-3

If you're not sure just what it is that isn't focused in the receiver, don't worry about it now. We'll get to that presently. But we're all familiar with the blurred effect that we get in photographs when the camera is not focused on the object. The result of bad focus is just about the same in a television picture.

The Test Pattern. – This is as good a place as any to introduce the test pattern, and why we use it for checking picture quality instead of using Milton Berle or the wrestlers of Fig. 2-1.

Each television broadcasting station has a *test pattern* that it broadcasts at certain hours for the purpose of helping service men to adjust receivers properly. There are many such test patterns in use, and we shall illustrate only a few in this entire course. But they are all similar in one respect. They are carefully designed to show up each of the various possible picture defects as clearly as possible.

Take the matter of focus, for instance. If our receiver is bringing in those wrestlers thrashing about on a mat, there is practically no part of the picture that stays in one place long enough for us to decide accurately just when we have the best focus. Also, it is difficult to check focus if the details of the picture are large, or blend into each other instead of being sharply defined.

On the other hand, the test pattern stands docilely still while we examine it, it has both large and small details, and it has sharply defined border lines between black and white areas. Under these conditions, we can make more precise adjustments of the set than would be possible if we used a moving scene.

Proper Synchronization. – It practically goes without saying that the picture as a whole is supposed to stay still on the screen. We said in Lesson 1 that when the picture moves vertically across the screen, it is usually because of a faulty adjustment of the *vertical sync control.* And we showed a photograph of the distortions or tearing of the picture that result from faulty or insufficient *horizontal sync.* These, we shall find, are adjustable from the front panel of the receiver in most sets and the customer himself must be taught how to make the adjustment.

Noise and Interference. – The modern television receiver is a relatively sensitive and complex instrument. It will pick out of the air just the television signal we want, and reject those from all other stations. It will, that is, if the installation has been properly made and the receiver properly adjusted. But there are other kinds of signals floating through the air that we definitely don't want in our receiver, but some of them do manage to sneak by in spite of us.

There is, for instance, the kind of random signal we call *noise*. In a sound radio, it would show up as a scratchy noise coming out of the loud speaker. In television, it shows up when the desired signal is too weak to override the "noise", and appears as *snow*, like this:

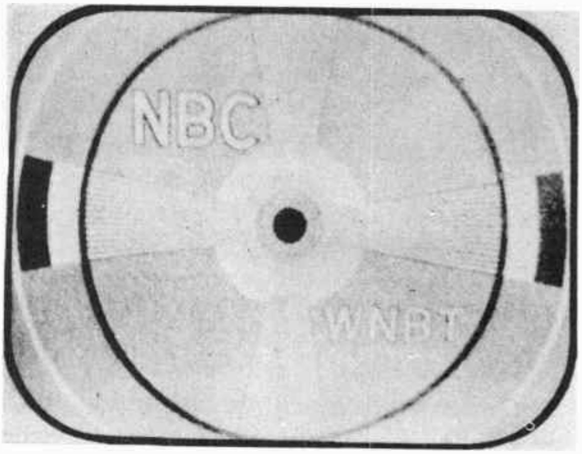

Fig. 2-4

Sometimes the wanted signal will be received twice – once directly, and once after it has been reflected by some big building. The result is a *ghost*, or multiple image showing on the kinescope. We showed a picture of this phenomenon in Lesson 1.

Automobile ignition systems, amateur radio transmitters, diathermy machines and a variety of other devices send out signals which appear in characteristic and annoying ways on the television screen.

All such unwanted signals that get through to the kinescope are referred to as *interference*. It is not always possible to eliminate them completely, or at all times. But there are precautions that can be taken to minimize them to a point where they don't cause active annoyance to the the customer. A few examples are as follows:

Fig. 2-5-a Ignition noise.

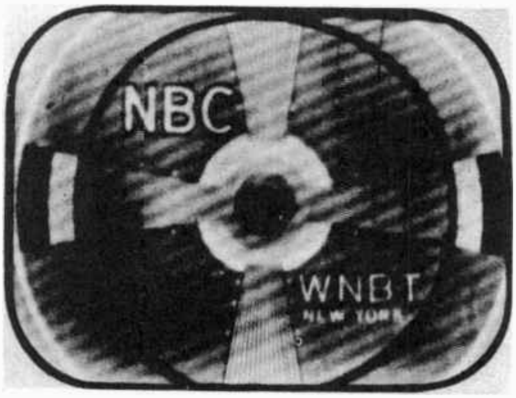

Fig. 2-5-b R-f interference.

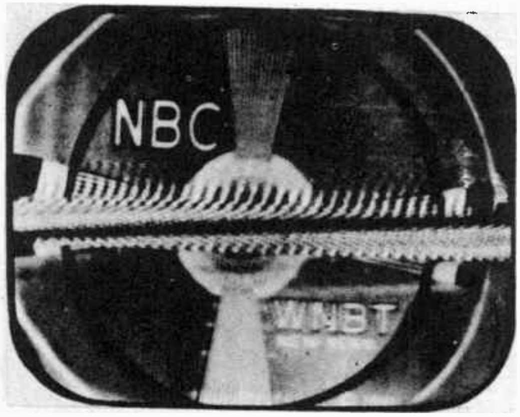

Fig. 2-5-c Diathermy interference.

There are also forms of interference that originate within the set itself. If the sound signal somehow gets into the video system, for instance, it shows up as light and dark horizontal bars moving across the screen. These *sound bars*, as they are called, can appear when the fine tuning control is slightly out of proper adjustment. The customer must therefore be shown how to tune the the set properly — another job for the installer, which we'll get to presently.

Size and Aspect Ratio. — Turn back to Fig. 2-2, and you will notice that the NBC test pattern shown there has two large concentric circles — a white one with its top and bottom clipped off, and a black one inside it. When the size of the picture is properly adjusted, both vertically and horizontally the white circle will just touch the sides of the picture, and the black circle will just touch the top and bottom. When this is done, the picture will not only be the proper size, but it will also be properly proportioned.

The relation of the width to the height of the picture is called the *aspect ratio*. It is set by the FCC standards at 4/3 — that is, the width of the picture is 4/3 of its height. This ratio was chosen because it happens to be pleasing to the eye, and because it is the same as that used in motion picture films — which are often televised.

What is more important to the service man, however, is the fact that the broadcasting station transmits a signal for a picture having a 4/3 aspect ratio. Therefore the picture on the kinescope must have the same aspect ratio. Otherwise, the shapes of objects in the picture will be distorted, appearing either too fat or too thin.

This is easily seen in the test pattern by looking at the black circle, because any departure from a true circle is easily detected by the eye. The test pattern shown below is too wide.

Fig. 2-6

Linearity. — A similar distortion can be caused by a faulty adjustment of the *linearity control*. In such a case, however, the circle not only appears stretched out, but its center is shifted toward one side or the other, so it appears egg-shaped rather than oval, thus:

Fig. 2-7

Don't worry now if you don't understand why these distortions take place in the receiver, or why they are called by the names we use. In due course such things will be explained. In the meanwhile, just realize that you don't have to know all about how television works in order to do a good installation job. You do, however, have to know what picture defects to look for, and what to do to correct them. In this section, we are showing you what to look for. In this and the next few lessons you will be told how to correct the faults.

Brightness and Contrast. — It might be well to point out right here that once you have left the customer's home, he is going to have the job of operating the set himself. A television set is not difficult to operate, *if you know how*. It is, however, a little more involved than a sound radio. It is therefore part of the installer's job to *make sure* that the customer knows how to manipulate the controls. No matter how good a job you have done on the installation, if the customer doesn't know how to make the picture stand still, or how to adjust the brightness of the picture so it is pleasing to look at, your work will have been practically wasted. The two controls the customer uses to adjust the quality of the picture are the brightness control and the picture control (also called the contrast control). We will discuss the proper use of both in some detail later in this lesson.

Signal Needed for Good Picture. – Now that we have discussed the standards by which we judge picture quality, let us consider how we obtain this "good picture" we've been talking about.

The first requirement is that a strong, clean signal be delivered to the receiver terminals.

That statement bears a little examination. By "strong", we mean a signal that not only has enough amplitude to operate the circuits in the receiver, but is strong enough to override the noise that invariably comes along with it. It must, in other words, have a high *signal-to-noise ratio.* Otherwise, the result is a snowstorm like that shown in Fig. 2-4.

Incidentally, it is possible to get *too* strong a signal. In such cases, it is necessary to take special steps to weaken the signal. Otherwise it overdrives the receiver, and the picture is liable to look like this:

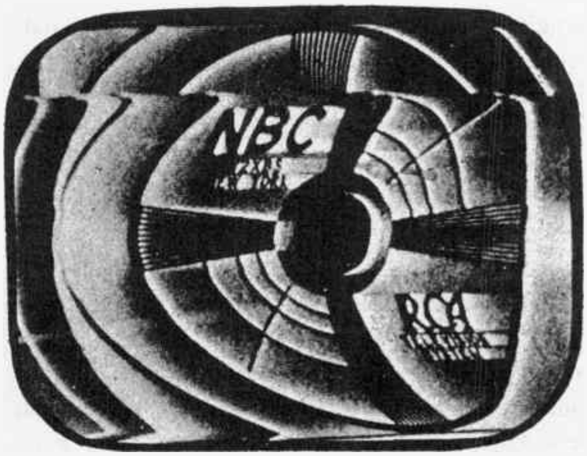

Fig. 2-8.

By "clean", we mean that there should be a minimum of interference, ghosts and multiple signals. It is not always possible to achieve this goal as closely as we might like, but a careful installation job can often go a long way toward it.

Now consider those words "delivered to the receiver terminals". No matter how strong and clean the signal is across the antenna, if it doesn't get to the receiver terminals, it will not produce a good picture. A large part of this course is going to be concerned with the mechanics of installing television antennas so they will stay put. You might, from this apparent emphasis, get the idea that the antenna installation was the really important job, and that the receiver would more or less take care of itself. But don't lose sight of the fact that the only reason for the antenna – and the transmission line – is to deliver that strong, clean signal *to the receiver terminals.* That is what you must supply in order to get a good picture on the kinescope. And that, in turn, is what it takes to make a satisfied customer.

Summary, and Where We Go From Here. – So far, we have pointed out the end objective of every receiver installation – customer satisfaction. We have shown that this requires a good picture, and we've defined the standards by which we judge picture quality. And we've shown that to achieve a good picture, we need a strong, clean signal at the receiver terminals.

In the remainder of this lesson, we want to give you a kind of preview of how your daily work fits into these requirements. First, we'll discuss the roles played by the various sections of the receiver, by the antenna, and the transmission line, and making it into a picture on the customer's kinescope. In doing so, we shall tell a little about what goes on inside that kinescope. Then we'll take a quick trial run through the job of installing a typical receiver and its antenna. There's a lot more to both jobs than we could possibly cover in this lesson, but this is just to give you the bare framework of the body of information you will soon be expected to have at your fingertips. In later lessons, we will fill in the holes with specific details of the installation technique.

THE RECEIVING SYSTEM

2-3. Now let's take a look at the receiving system. First we shall consider what the television signal consists of, and then how it is received. This is where *you* come in, for it is your job to see that the signal is received properly, and thus make the customer satisfied.

The Television Signal. – You will remember from Lesson 1 that the television signal is in two parts – the *picture signal* and the *sound signal* (or *voice* as the customers usually call it). Both are radiated from the transmitting antenna of the television broadcast station as very high frequency electromagnetic waves. We'll say a little more about the physical nature of the waves in Sec. 2-5, but for now let's concentrate on several important facts:

(1) Both the sound and picture signals travel through space as a radio wave from the transmitter antenna, horizontally in all directions. Although the sound and picture signals from a television broadcast station do not contain the same frequencies, their frequencies are so close together that the same antenna picks up both at the same time. Naturally the customer expects to get good sound along with a clean, clear picture.

(2) The amount of energy in the radiated picture signal is made to vary in accordance with the information to be transmitted. As a result, the picture signal carries all the information that is needed at the receiver to reproduce an excellent picture on the screen of the picture tube. This includes the details of *picture information* in the image, *synchronizing pulses* to control the timing of the receiver scanning circuits, and the *blanking pulses* needed to blank out the beam during the return time

(3) A small part of the total energy radiated from the transmitter can be intercepted at a distance from the transmitter by means of the antenna at the receiver. The further the receiving antenna is from the transmitter, the weaker the signal, since its strength decreases as it travels away from the transmitter. There is a *normal service area*, surrounding the transmitter, where you can expect to have the amount of signal needed to provide a good picture and good sound. Normally this is about 50 miles. If you are in the fringes of this service area, it will be more difficult to get enough signal and you probably will have to install an elaborate antenna in order to pick up sufficient signal for the receiver.

The television signal is radiated by each broadcast station within its own assigned *channel*. As listed in Lesson I, there are 12 channels available now for television broadcast stations, each with a band six megacycles wide. For instance, the signal broadcast by a station using Channel 4 contains practically all frequencies between the definite limits of 66 mc and 72 mc – but none higher or lower. The 6 mc band for each channel includes the picture signal and sound signal for each station. The sound signal is included in the upper half megacycle in each channel, and the picture signal in the remaining frequencies.

Usually there are many stations broadcasting at the same time, so that the antenna picks up signals from all stations on the air – and in many cases interfering signals that we definitely do not want from other sources. However, the receiver can *tune in* to the desired channel to receive the desired picture and sound signals, selecting this from all other signals.

The picture signal not only has the picture information corresponding to the image we want to see, but includes the blanking pulses and synchronizing pulses as a part of the picture signal. Because of this, you have to pick up enough picture signal to produce good synchronization so that the picture will hold steady on the screen. Normally, there is good synchronization when there is enough signal for a clean picture without snow.

Relation of Receiver, Antenna and Transmission Line. – We have stated that the energy in the television signal is radiated outward horizontally from the transmitting antenna. That means that *some signal exists at any given point in space*. So why can't the receiver pick up this signal directly, without the help of an antenna? We could write a complicated answer to this. The simple fact is that the antenna may be considered the part of the receiver whose function it is to pick up from the air the signal that we need to operate the rest of the receiver.

The matter of where to locate the antenna depends on how we can best pick up signal for the receiver. If we can get good results with an antenna built into the receiver cabinet, or an indoor antenna near the receiver, or an antenna mounted outside the window, that's the kind of antenna we'll use.

However, the signal strength is often greater at some distance above the receiver itself, so we can intercept more signal energy if we put the antenna up on the roof. In many cases, therefore, it is necessary to use a roof antenna so that there will be enough signal at the receiver for good results.

This brings us to the need for a transmission line. Remember, the important thing is to get that strong, clean signal applied to the *receiver terminals*. The transmission line is simply the connecting link whose function is to carry the desired signal from the antenna to the receiver *with as little loss as possible*.

THE RECEIVER, AND HOW IT WORKS

2-4. Now that we have a more definite idea of what the television signal is like, let us exexamine what it is supposed to accomplish in the receiver. The receiver is a complex device, but its major sections are relatively few. We can show their relation to each other by a simple block diagram like this:

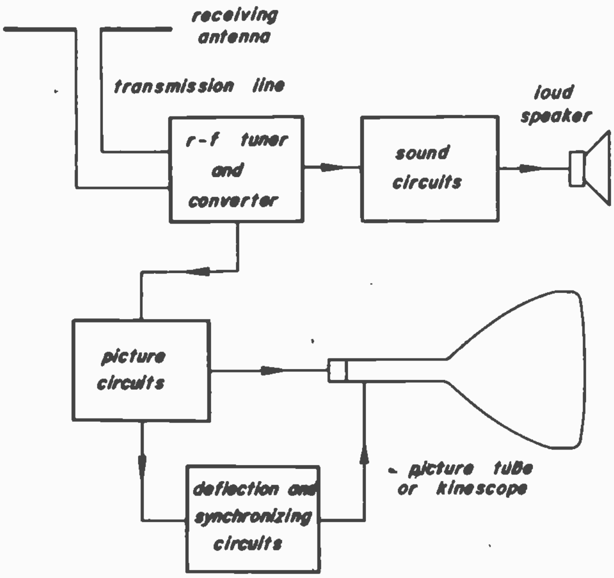

Fig. 2-9

We see that the antenna and transmission line feed the received signal into the input of the *r-f tuner*. The sound signal is then separated from the picture signal, and each is applied to the appropriate part of the receiver. We shall concentrate for now on the picture signal in the receiver.

We won't be able to explain now how all the circuits work. Fortunately, that won't be necessary to enable you to do your job well. A member of an installation team, however, must know enough about the receiver to understand the operation of the various controls, and how to adjust them to obtain the best possible reception.

The heart of a television receiver is the picture tube, or *kinescope*. This is where the picture finally appears. Everything else in the receiver is there to enable the kinescope to function. So let us examine first how the kinescope works.

The Kinescope. – A typical kinescope looks like this:

Fig. 2-10

It is an evacuated glass tube, with an electron gun in the narrow part, and a fluorescent screen on the large glass face at the front.

Operating Principle of the Kinescope. – The function of the *electron gun* in the narrow neck of the tube is to furnish a continuous supply of electrons – infinitesimally small particles, each carrying an electric charge – and form them into a stream directed at high velocity toward the fluorescent screen at the other end of the tube. The screen is a coating on the inner surface of the front face of the tube. The screen glows wherever the electron stream strikes it – brightly if there are many electrons in the stream, dimly if there are fewer electrons.

The stream of electrons – which may be thought of as similar to the stream of water particles from a hose, or of bullets from a machine gun – is called the *beam*. The beam is made to move rapidly across the screen in a zig-zag pattern, as explained in Lesson 1. In doing so, it covers in rapid succession every point on the screen that is included within the picture area. This rectangular area of the screen covered by the moving beam is called the *raster*.

Deflection Yoke. – The beam is caused to move in the proper manner across the screen by the action of a varying magnetic field. This field is set up by varying currents that flow in coils placed around the neck of the tube. There are four such coils, but they are mechanically fastened together in a single doughnut-shaped unit called the *deflection yoke* (or just plain *yoke*), through which the tube is passed. Two of the coils control the vertical motion of the beam, while the other two control its horizontal motion.

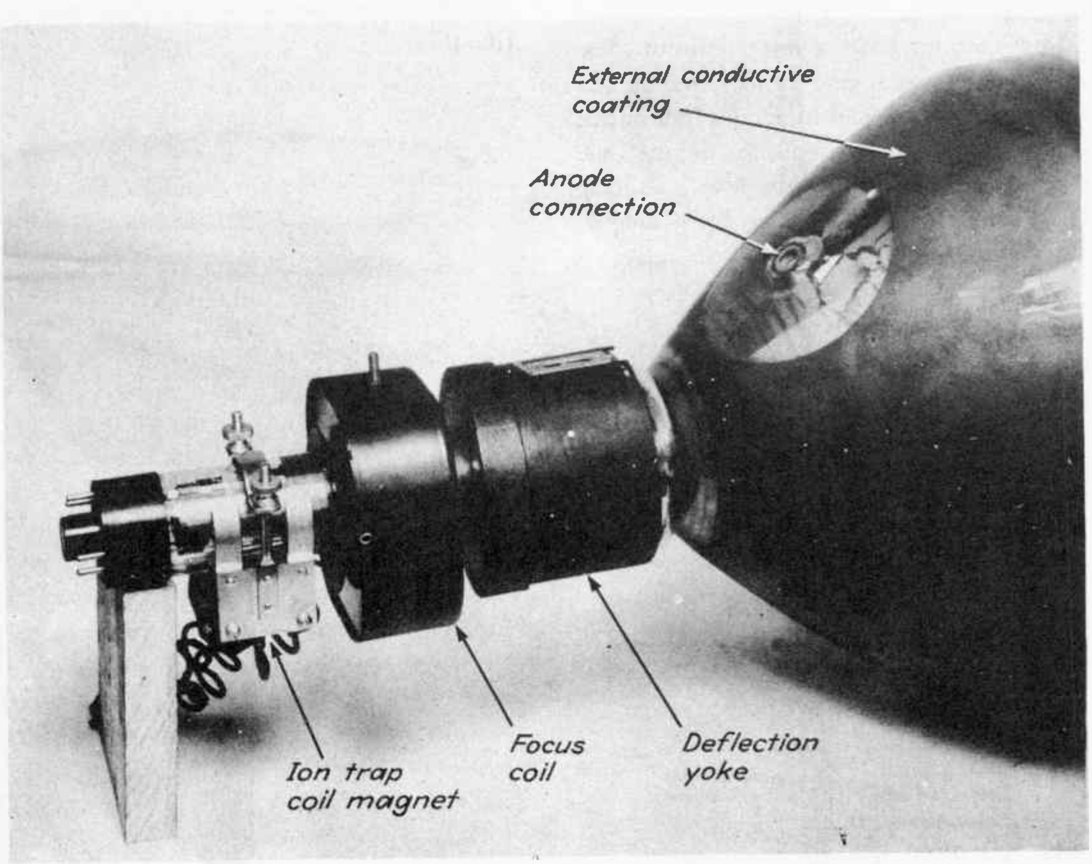

Fig. 2-11

When current flows in the deflection coils, the electron beam is bent, or *deflected,* from the position it would otherwise take. If the current is made to vary in just the right way, the amount of this bending also varies in such a way that the beam traces out the raster on the screen, like a brush moving with successive horizontal strokes down a wall.

The Focus Coil. – The electron gun forms the electrons into a beam, but it does not, by itself, make the beam concentrate on a small spot at the screen. This is accomplished by another magnetic field, furnished by the *focus coil,* also placed around the neck of the tube. Without it, the electron paths would diverge so much that the beam would cover too large an area of the screen at one instant. The result would be like that of an artist trying to paint a finely detailed picture with a big brush suitable only for painting barn doors. The focus coil bends the paths of the individual electrons so that they all converge on the same point on the screen. Thus they produce a small, sharply defined *spot* of light, instead of a blurred smear.

The kinescope, with the deflection yoke and focus coil in place, is shown in Fig. 2-11.

Also shown in this picture is something called the *ion trap magnet.* To explain what this is for, we'll have to go back and examine the electron gun a little more carefully.

The Electron Gun. – The electron gun consists of several cylindrical electrodes. In cross section, they would look something like this:

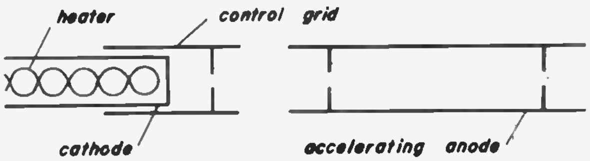

Fig. 2-12

The *cathode* is coated with a material that is an efficient source of electrons when it is heated. When a source of electrical power is connected to the ends of the *heater* inside the cathode, the cathode emits electrons from its surface.

The electrons are attracted toward the *accelerating anode* by a voltage applied to it. But to get there, the electrons must pass through a small hole in the *grid,* which completely surrounds the cathode except for that small hole. Many of the emitted electrons pass through the hole in the grid, and thus are formed into a beam. By the time they get near the anode they are going so fast that they pass right through it, and so are propelled toward the screen.

The Ion Trap. – Unfortunately, the electron gun also sprays out some much larger particles – *negatively charged ions* – which can damage the fluorescent coating on the face of the tube if something is not done to remove them. This damage usually shows up as a brown spot permanently burned into the center of the screen. This is called an *ion spot,* and is why we need an ion trap.

The trap works on the principle that the heavier ions are not deflected by a magnetic field as much as the lighter electrons. The beam from the cathode, containing both ions and electrons, is aimed at such an angle that neither kind of particles would hit the screen. But the ion trap magnet is placed around the neck of the tube, in just the right position relative to the electron gun, so that its magnetic field bends the stream of electrons back into line to reach the screen, while the heavier ions are allowed to strike a surface installed in the gun to trap them.

In the older receivers, the ion trap magnet was an electromagnet with two coils, and it is so shown in Fig. 2-11. Current models, however, employ a permanent magnet. It is ring-shaped, and slips over the narrow neck of the tube. The front of the magnet is usually indicated by an arrow pointed toward the screen. When it is set in exactly the right position, the screen attains its maximum brilliance. This adjustment is very critical. If the magnet is even a little off, no electrons will reach the screen and no light will appear on it.

High Voltage Anode. – Refer back to Fig. 2-11, and you will notice a terminal on the back of the large bulb of the tube, marked "anode connection." This is connected to a conducting coating on the *inner* surface of the tube. This coating forms a second accelerating anode. It is supplied with a high voltage – several thousand volts – that gives the electrons in the beam the final high speed needed for a bright picture. Remember that the beam moves so rapidly across the screen that it stays on any one spot only a *fraction of a millionth of a second.* In order to cause the fluorescent coating to become luminous in that brief time, the electrons in the beam must be given a terrific velocity. This velocity is imparted by the high voltage on the inner conducting coating.

The *outer* conductive coating shown in Fig. 2-11 is *not* the second anode. It is merely grounded to the chassis. (In metal envelope tubes, the metal envelope itself is the second anode.)

So far, we have a finely focused, high velocity beam, with ions removed, sweeping in just the right way across the kinescope screen. But we still don't have a picture – only the raster, showing as a luminous rectangle.

Modulating the Beam. – We obtain the picture by applying the *video signal* to the *grid* of the kinescope. Remember that the video signal is an electrical signal that varies in accordance with the light and dark areas of the scene being scanned by the camera beam. Applied to the kinescope grid, it varies or *modulates* the beam *intensity* – the number of electrons that are permitted to get through the hole in the grid and reach the screen. This varies the brightness of the spot as it sweeps across the screen. When the camera beam covers a light spot, the transmitted signal causes the kinescope grid to let more electrons through, and the screen glows brightly. And when the camera beam covers a dark spot, the signal reduces the number of electrons in the kinescope beam, and makes the screen glow dimly or not at all. In this way, the kinescope beam traces out a duplicate of the light and dark areas scanned by the camera beam.

It might be well to mention here that the kinescope screen is *not black.* It is white, or nearly so. There is no beam of "black light" to make part of the white screen dark. The "black" areas of the picture merely look that way by contrast with the luminous or "white" parts.

We can summarize all that we have said about the structure and operation of the kinescope by the following cross section drawing, in which we have represented each of the parts we have discussed:

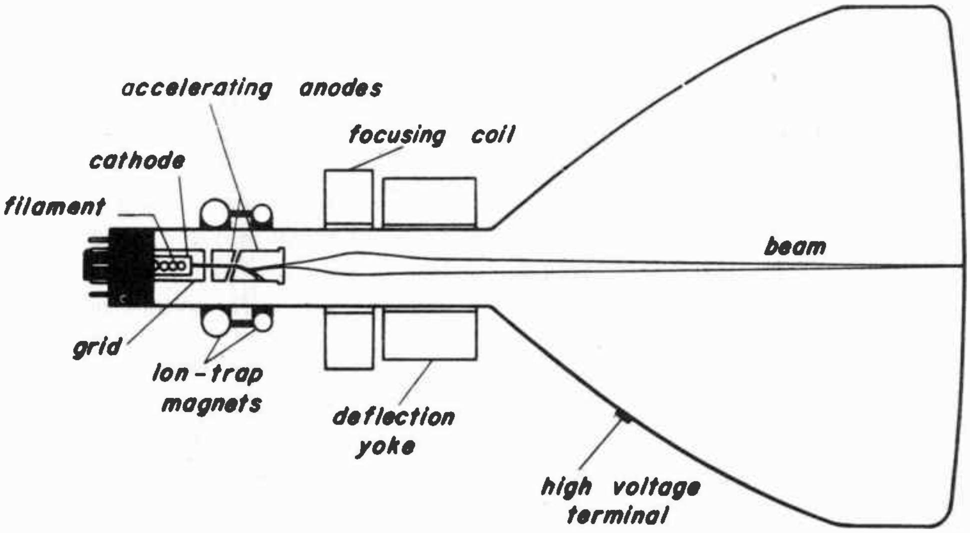

Fig. 2-13

Now that we have a notion of what goes on inside the kinescope, we are in a better position to consider the functions of the other sections of the receiver. Let's keep in mind the reason for all this explanation. It is the job of the installer to adjust a number of controls, and to instruct the customer in the use of others. If he understands clearly just what each control does to the kinescope, he is pretty likely to do a better job of both adjusting and instructing.

Associated Circuits. – Suppose we re-draw our block diagram of the receiver, in the light of what we have just learned about the operation of the kinescope. We would find it now looks something like this:

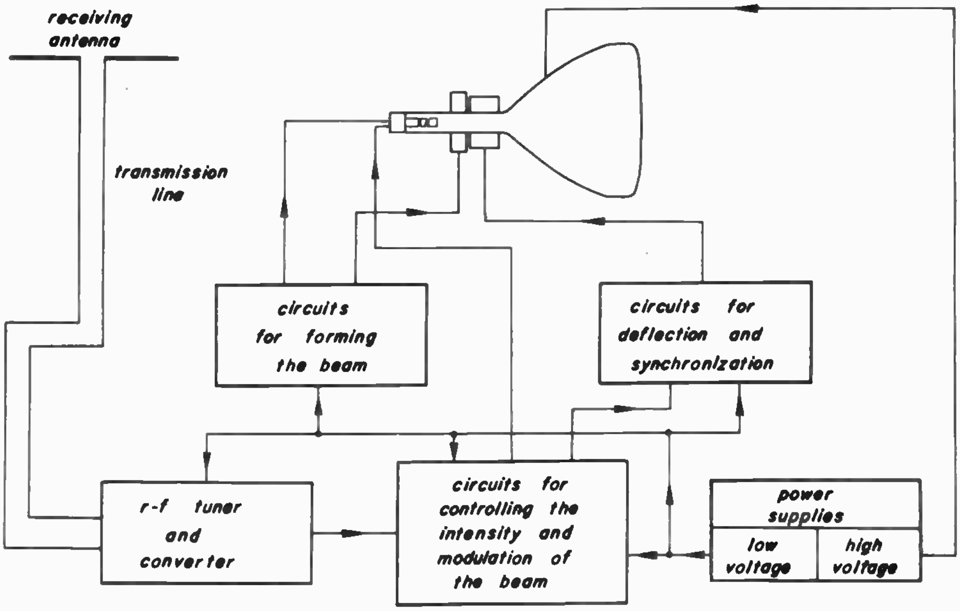

Fig. 2-14

Let's go over this diagram, and see what voltages, currents and signals must be supplied to it. Remember that each of these presents a possible need for an adjustment or control with which you must be familiar.

To cause the cathode to emit electrons for the beam, we must first, of course, supply power to the heater. That done, we find the following groups of circuits are needed to operate the tube:

(1) Circuits for forming the beam, to supply the voltages for the accelerating anodes, and the current for the focus coil,

(2) Circuits for deflecting the beam, to supply the currents for the deflection coils,

(3) Circuits for synchronizing the beam, to insure that the kinescope beam scans the raster in exact step with the camera tube beam. This the circuits accomplish by taking the sync pulses from the video signal, and applying them to the deflection circuits;

(4) Circuits to supply the kinescope grid with the video signal, blanking pulses, and a voltage needed to regulate the brightness of the picture, in order to control the intensity and modulation of the beam;

(5) The r-f tuner and converter, to select the desired station and convert its signal into a form that is usable by the receiver;

(6) Two power supplies, to supply the power required to operate all the circuits.

The Controls. – There are two groups of controls that affect the operation of these various circuits: (1) the *operating controls*, located on the front panel of the receiver, which the customer manipulates in normal use of the set; and (2) the *set-up controls*, which you adjust when installing the receiver. They are located on the chassis but out of reach of the customer.

There are seven operating controls:

(1) The OFF-ON switch, which turns on the power to all circuits, and also acts as a VOLUME control for the sound, just as in an ordinary AM radio receiver.

(2) The STATION SELECTOR, to select the desired channel. It operates by switching in the proper section of the r-f tuner.

(3) The FINE TUNING control, to adjust the tuning more precisely than can be done with the station selector.

(4) The VERTICAL hold control, which adjusts the vertical synchronization to keep the picture steady on the screen.

(5) The HORIZONTAL control, which regulates the horizontal synchronization to keep the picture from "tearing".

(6) The BRIGHTNESS control, to set the brilliance of the picture. It does this by regulating a steady voltage applied to the kinescope grid.

(7) The PICTURE control (or contrast control), to regulate the amplitude of the video signal applied to the kinescope grid.

The set-up controls are both more numerous and more complex. Their adjustment will be taken up in Lesson 3. But just to give you an idea, here are *some* of the things they regulate: beam focus, height and width of picture, centering of picture, horizontal synchronizing circuits, and vertical and horizontal deflection circuits. Before we get to these let's go back to the receiver sections shown in Fig. 2-14, and consider how they affect the installer's job.

Electrical Connections to Kinescope. – When you place the kinescope in the receiver chassis, the tube prongs fit into a socket through which circuit connections are completed to the heater, cathode, grid and accelerating anode of the electron gun.

An a-c voltage of 6.3 volts supplies the heater power, which in turn heats the cathode to the temperature at which it emits electrons. A relatively low direct voltage – 330 volts – applied to the anode (sometimes an accelerating grid) in the electron gun itself is sufficient to start the beam electrons on their way. A much higher voltage, however, is needed on the inner conducting coating to give brilliance to the picture. The intensity of the beam is controlled by a voltage applied to the grid. Still another d-c voltage applied to the focus coil produces the current that sets up the magnetic field to focus the beam.

The ion trap magnet requires no electrical connection. The focusing coil and the deflection yoke are already connected in the receiver chassis.

One more supply connection has to be made – the high voltage lead must be connected to the high voltage terminal on the kinescope. There are two separate power supplies. The *high voltage supply* furnishes the voltage for the high voltage terminal on the kinescope. The *low voltage supply* furnishes all other voltages required by the set.

The high voltage of several thousand volts is dangerous! Do not mess around with the high voltage connection while the power is on.

Beam-Forming Controls. – When the power plug is connected to the 110 to 120-volt a-c line, and the power switch turned to ON, the kinescope should work.

There are two controls directly affecting the beam-forming circuits, shown in Fig. 2-15.

The BRIGHTNESS control is connected to the cathode of the kinescope in such a way as to set the voltage between the cathode and grid. This voltage is connected in such polarity that an increase in the voltage results in a decrease in brightness.

The focus control varies the amount of current flowing in the focus coil. This sets the strength of the magnetic field that determines the amount of bending of the paths of the individual electrons in the beam. This, together with the position of the focus coil on the neck of the tube, determines the point at which the beam will focus. In practice, the coil's position is set as accurately as possible first, and then the focus control is varied for a fine adjustment.

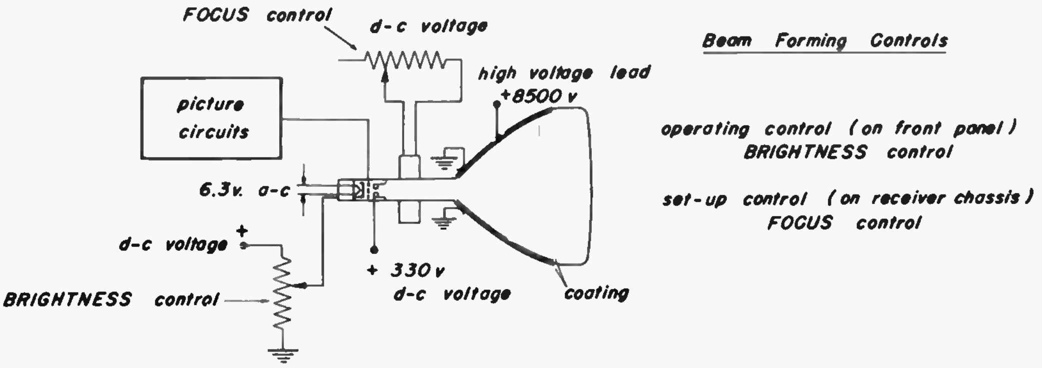

Fig. 2-15

Deflection and Sync Controls. – The voltages and currents required to deflect the electron beam are supplied by the deflection circuits in the receiver. These contain two separate *deflection generators*, one to move the beam vertically, and one horizontally. These generators are kept in exact step with the signal by means of the sync pulses transmitted with the picture information. The sync pulses are separated from the rest of the composite video signal by the *sync separation* circuits in the receiver. Then the vertical sync pulses are separated from the horizontal sync pulses, and each is applied to the appropriate deflection generator. This is shown diagramatically thus:

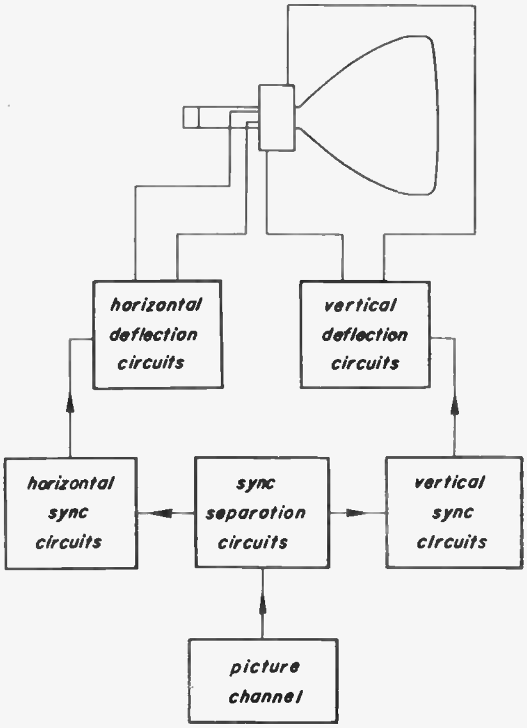

Deflection and Sync Controls

operating controls (on front panel)
- *HORIZONTAL HOLD*
- *VERTICAL HOLD*

set-up controls (on receiver chassis)
- *horizontal centering*
- *vertical centering*
- *width*
- *height*
- *horizontal linearity*
- *horizontal drive*
- *horizontal oscillator frequency*
- *horizontal oscillator waveform*
- *vertical linearity*

Fig. 2-16

The circuits that accomplish all this are fairly complex. Again, however, it is not necessary for the installer to know just how they work. It is necessary only that he know which controls are to be adjusted when putting the set in operation.

There are only two operating controls affecting the deflection and sync circuits. These are the HORIZONTAL hold control and the VERTICAL hold control. What each of these controls does is to regulate the frequency of the corresponding deflection generator, setting it at a frequency that will most easily fall into step with the sync pulses applied to it. When they are so set, the effect is to *hold* the picture in place, preventing it from moving up and down the screen, or being distorted horizontally.

The operating controls will function properly only if the set-up controls are properly set. While the names and locations of these controls may differ somewhat on different models of receivers, in general they are listed in Fig. 2-16.

Beam Intensity and Modulation Controls. – The two controls that directly affect the beam intensity are the BRIGHTNESS control and the PICTURE control. Both are operating controls.

We have already referred to the BRIGHTNESS control. When no picture signal is being received, this regulates the total illumination or brightness of the kinescope screen. It does not depend on the picture signal for its operation. But when a picture signal *is* applied, the BRIGHTNESS control regulates the *average* brightness of the picture.

What the PICTURE control does is to regulate the *amount* by which the maximum brightness of the spot is reduced by the "black" parts of the picture signal. In most sets, this is accomplished in the *intermediate-frequency* section of the picture channel. The PICTURE control varies a voltage that regulates the amount by which the picture signal is *amplified* in this section. Without amplification, it would be too weak to have any appreciable effect on the beam intensity. The signal is amplified some more in the *video amplifiers;* these circuits follow the *video detector*, where the video signal is recovered in its original form.

The effect of the PICTURE control is to alter the *contrast* between the lightest and darkest parts of the picture. For this reason, it is sometimes referred to as the *contrast control.*

Note carefully, however, that the BRIGHTNESS and PICTURE controls must be adjusted together. For instance, if the BRIGHTNESS control is turned up, the contrast seems to become less. For the same apparent contrast with the brighter picture, it would be necessary to turn up the PICTURE control too. The reason for this is best explained by a simple illustration. If you are in a room lit by a hundred lighted candles, you can blow out two of them and hardly notice the difference. But if only three candles had been burning in the first place, and you blew out two, the difference would be considerable. The eye thus senses changes in illumination relative to the light already present.

On some models there is one more control that affects the picture channel. It is the *AGC Threshold Control.* When properly adjusted, this control sets the level at which the *automatic gain control* operates to prevent sudden changes in picture contrast when the received signal strength at the antenna changes. If you have ever seen a television picture flicker on the screen as the signal fades in and out because of airplanes passing nearby, you will appreciate the value of AGC in the receiver to minimize this *airplane flutter.* Another value of AGC is when changing from one station to another of different signal strength.

The Sound Channel. – Up to now, we have neglected the sound signal while trailing the picture signal through the receiver. The *audio signal* applied to the loud speaker is the output of a sound channel whose circuits are not much different than those of a standard frequency-modulated broadcast receiver. The sound signal is separated from the picture signal in the earlier stages of the intermediate-frequency amplifier circuits. Then it passes through the sound intermediate-frequency amplifiers, the sound detector and the audio amplifier, in that order.

On most sets, there is only one sound channel control – the SOUND control. This is nothing more nor less than our old friend the volume control of the broadcast radio receiver. It presents no problems to either the installer or the customer. On some television receivers, it is mounted on the same shaft with the OFF-ON switch. Also, some TV receivers have a TONE control, but its adjustment is purely a matter of customer preference.

R-f Tuner and Converter. – The television signals received at the antenna and carried to the receiver by the transmission line are applied to the input terminals of the *head-end*, or *front-end*, of the set. This is usually a separate subchassis, containing the r-f tuner and converter.

The term *r-f tuner* is probably fairly familiar, and its meaning fairly obvious. It is a device that can be adjusted to enable the receiver to select, or tune in, one band of radio-frequency signals, and suppress all others. The word *converter*, as we are using it here, can stand a little explaining.

In general, a *converter*, as applied to radio and television, is an electronic device, usually containing one or more vacuum tubes, that can *convert* an r-f input signal to a different frequency. It does this by actually generating the new frequency, and then suppressing the original frequencies by means of a tuned circuit in its output. If the input is a *band* of r-f signals, then the output will also be a band of frequencies, each frequency differing from an input frequency by some fixed amount, but the entire output band having the same bandwidth as the input. Thus, if the input contains frequencies between 60 and 66 megacycles, the output might contain the frequencies between 21 and 27 megacycles.

The converter in a television receiver consists of an *oscillator* and a *mixer.* Never mind now just how they work. Just remember that they work together to convert the band of input radio-frequencies to a band of lower frequencies – the *intermediate-frequency*, or *i-f* band. To be more exact, it produces two i-f bands, one carrying the video information, and one carrying the audio. These i-f bands are the signals that are fed to the picture channel and sound channel in the receiver respectively.

In addition to the converter and the r-f tuning coils, the head-end assembly usually contains an r-f amplifier, which steps up the signal fed to the converter, and separates the wanted signal from the unwanted signals.

This has been a bit of a digression from our main point of tuning controls. But as long as you are going to hear the word "converter" used, you might as well know what is being converted into what.

There are *two tuning controls* on a television receiver. These are the CHANNEL SELECTOR and the FINE TUNING control. Both are operating controls, located on the front panel of the receiver.

The CHANNEL SELECTOR switch enables the customer to pick the particular station he wants to see and hear. It differs from a broadcast radio tuning control in that it does not permit continuous tuning over the entire television band – it just tunes to the channels in use, like a radio receiver with push-button tuning.

In television, however, tuning must be much more precise than in sound radio. Therefore an additional control, the FINE TUNING control, is provided to enable the customer to shift the tuning of a particular channel continuously over a very narrow range, in order to get the station tuned in exactly.

There are a number of alignment adjustments that affect the tuning section of the receiver. But if the receiver has been properly adjusted at the factory, which it almost always is, these do not have to be touched by the installer. In fact, *you should never try to align the set in the customer's home*, even if you think it needs it. That is a job for the technicians in the shop. Therefore, so far as the installer is concerned, there are no set-up controls for the r-f tuner and converter. There is one exception to this – an oscillator adjustment that may occasionally be made, and which will be discussed in Lesson 3.

FUNCTION OF THE RECEIVING ANTENNA

2-5. We've gone to some pains to emphasize that the important thing in an installation job is to deliver a strong, clean signal to the receiver terminals, in order to get a good picture on the kinescope. In so doing, we hope we've put over the idea that the antenna is an accessory to the receiver, and not the important thing in itself. This is true. But having made the point, we must now mention that the antenna is a very important accessory.

The antenna is the device that literally picks the signal out of the air. If the antenna doesn't do its job well, that strong, clean signal can't get to the receiver terminals. So maybe we'd better take another look at this antenna business, and find out what makes the difference between a good antenna installation and a bad one.

Let's start by considering how the signal gets to the antenna in the first place.

Propagation of Television Waves. – You will recall that this was the title of one of the numbered sections of Lesson 1. So some of this is likely to be review. Here are the fundamental facts to be remembered about the television signal:

1. A very high frequency electric current flows in the transmitting antenna. It reverses its direction millions of times a second. This sets up a *field* around the antenna. A field is merely a region of space in which a force of some kind exists. Thus the space around the earth would be called the earth's gravitational field, since any body in it would experience the force of the earth's gravity. The field around an antenna is an *electromagnetic field*. Its force would be experienced in some way by an electrically charged particle, such as an electron, or by all the electrons in a conducting body. It differs from the gravitational field also in that it reverses its direction at the same *frequency* as the current in the antenna. *Frequency* is the number of complete *cycles*, or series of values, that the current

goes through in a second. A *megacycle* is a million cycles. Thus, when we speak of a 50-megacycle signal, we mean one that goes through 50 million cycles every second.

2. This alternating electromagnetic field exists not only right near the antenna, but at a great distance from it as well. But it takes a definite length of time for the changes in the field – which changes constitute our television signal – to reach a particular point. These changes travel through space, out from the antenna, at the speed of light: 186,000 miles or 300,000,000 meters per second. (A meter is 39.37 inches.) This travelling field of force, alternating its direction as it travels, thus moves as *electromagnetic waves*.

3. The strength of the travelling field, or wave, or signal – for our purposes, we can consider the three terms as different names for the same thing – diminishes as it gets further and further from the transmitting antenna.

4. Electromagnetic waves consist of two components – an alternating electric field, and an alternating magnetic field, at right angles to each other. If the transmitting antenna is horizontal, then the electric component of the wave is also horizontal, and the magnetic component is vertical. Such a wave is said to be *horizontally polarized*. Hang onto this idea, for that is the kind of waves we deal with in commercial television. We'll return to it in a moment.

5. The transmitted television signal, or wave, follows approximately a line-of-sight path, out from the transmitter in all directions. Unlike lower frequency radio waves, it is not reflected from the upper ionized layers of the atmosphere, and it does not (except under very unusual conditions) follow the curvature of the earth.

6. Television waves, like radar waves, are reflected by objects in their path, much as light waves are reflected. Since the reflected television wave travels a longer distance than the direct wave in getting from the transmitter to the receiver, it arrives a little later. The difference in time is only a few millionths of a second. But that is long enough to produce a second image, or *ghost*, as shown in Fig. 1-22, of Lesson 1.

7. Television signals, as we said in item 1, alternate millions of times per second, and we can therefore refer to the frequency of the signal. But the television signal has *not just one frequency but many*, at the same time. This may not seem to make sense right now. If it doesn't, just take it on faith for a while. The signal from any one station, as we said in Sec. 2-3, has all the frequencies within a band six megacycles wide.

8. Other electromagnetic radiating sources – such as automobile ignition systems, diathermy machines, amateur radio transmitters and thunderstorms – may radiate waves containing some or all of the same frequencies as those of the television station we want to tune in. These interfering signals, unfortunately, can be a major annoyance to the television technician, for they can mar or even destroy the picture if strong enough.

So much for the vital facts about this thing we call the television signal. Now let's relate them to our antenna installation problem.

What the Antenna Does. – So far, our signal consists of a rapidly alternating field of electrical force, travelling in waves out from the antenna. These waves contain actual electrical energy. An antenna is simply a device that will catch a small bit of that energy, and convert it into a form we can use – a high frequency electric current.

Essentially the receiving antenna is simply an electrical conductor to which the alternating electrical force of the radiated waves can be applied, causing a current to flow back and forth in it. Thus if a straight rod of copper is suspended in midair in such a way that the electrical force of the wave can act along its length, a current will flow in the rod.

Remember we said in item 4 that the electric component of the wave is horizontal. So to get the most current in the rod, it too must be horizontal. Also, the direction of the electric force is perpendicular to the direction in which the wave travels. So again, to get the most current in the rod, it must be broadside to the wave, as illustrated in Fig. 2-17.

If the rod is pointed at the transmitting antenna like a spear, the electric force of the wave does not act along its length, and practically no current is made to flow in it.

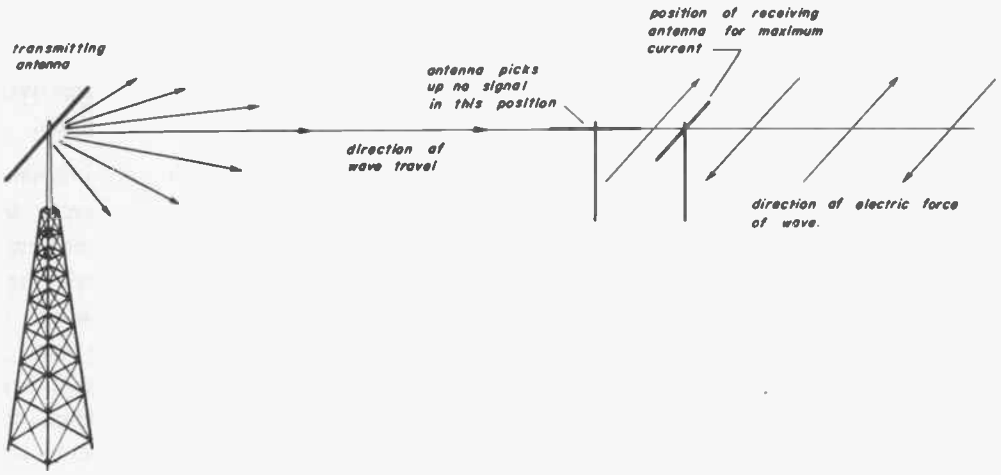

Fig. 2-17

Even if current is flowing in the rod, it does us no good unless we can lead it to the receiver terminals. So we cut the rod in the middle, and attach a transmission line to the cut ends. We then have the simplest kind of television receiving antenna, called a *dipole*.

Dipole Antenna. – A dipole antenna (or just dipole) is a metal rod cut in the center and suitably mounted, like this:

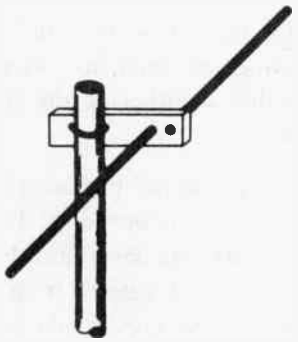

Fig. 2-18

Subject to certain limitations, it will pick up television signals. As we have shown, it picks up the most signal when it is *oriented* so the electric forces act along its length.

In addition, it picks up signals best at a *particular frequency*. This best frequency is determined by the length of the antenna. However, it will pick up signals fairly well at other frequencies – which is fortunate for us, for otherwise we'd have to have a separate antenna for each television channel. The dipole picks up signals at frequencies *higher* than the "best frequency" more effectively than at lower frequencies. Therefore the *length of the dipole antenna to be used is determined by the frequency of the lowest television channel desired.*

Now let's turn to that matter of *orientation* – the position of the antenna relative to the direction of the station whose signals we want to pick up.

Suppose we have a dipole antenna cut to a length that will pick up Channel 2 best, and it is mounted so it points East and West. We can represent the direction of its best reception for Channel 2 by arrows pointing North and South, thus:

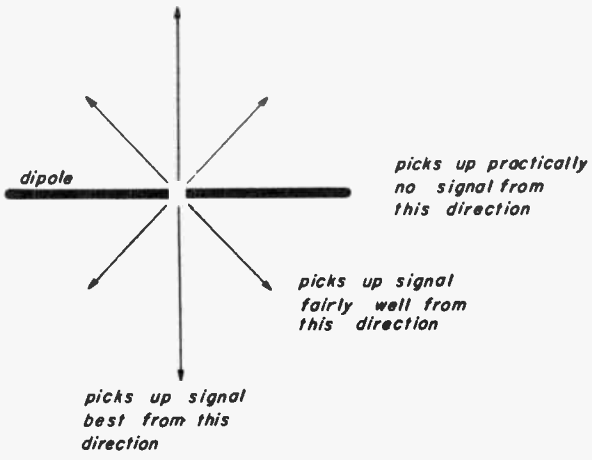

Fig. 2-19

The shorter arrows indicate other directions from which it will pick up signals, but not quite so well.

However, this *directivity pattern* holds good only for signal frequencies close to the "best frequency" of the dipole. If the signal frequency to be picked up is considerably higher than this "best frequency", then the direction of the best pickup is no longer broadside to the dipole as shown in Fig. 2-19. A dipole cut for Channel 2 would pick up only a small amount of signal from a high band station (Channels 7 to 13) located broadside to it. Instead, it would pick up higher frequency signals equally well from the four directions shown here:

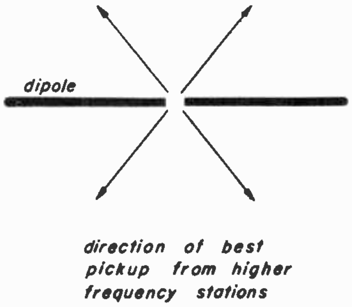

Fig. 2-20

This characteristic can be helpful if the high and low-band stations desired happen to be located in the directions of best pickup. But if the Channel 2 and Channel 9 stations, for instance, are both located in the same direction, the antenna often cannot be oriented to pick up both stations well — that is, not unless we add something to the antenna.

In such a case, we would add *loading wings* to the dipole, so it would look like this:

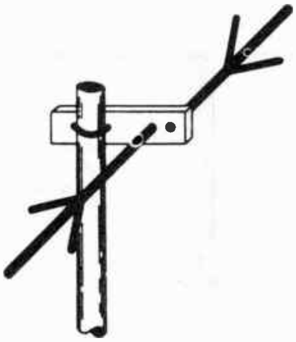

Fig. 2-21

With this addition, the antenna will pick up *both* high-band and low-band stations best from the broadside direction, and the directivity pattern of Fig. 2-19 will hold for all stations.

This use of loading wings is just one example of the complications that frequently arise. We won't pursue the matter any further now. We just didn't want you to think that a simple dipole would *always* work satisfactorily. Things just don't work out that easy. There are many other expedients that can be used to meet special sets of conditions — and before you finish this course, you will be familiar with the directivity patterns and other characteristics of a fairly wide variety of antenna types from which you will have to select the one most effective for each job.

GETTING THE SIGNAL FROM THE ANTENNA TO THE RECEIVER

2-6. Back in our summary of how television waves are propagated, we said they could be reflected by objects, like light. It follows from this that those same objects can block off reception, just as a building blocks off sunlight, casting a shadow on the lower buildings around it. To avoid this cutting off of the television signal by surrounding buildings, hills and the like, television receiving antennas are often mounted as high as possible — either on the roof, or on top of a tall mast.

Since very few of our customers spend much time on their roofs, it is our job to lead the signal from the rooftop antenna down into the living room where the receiver is located. It might seem that any old piece of lamp cord would do for the purpose, providing it were long enough. Unfortunately, this just ain't so. At the frequencies used in television, electricity is very choosy about the path it follows, and misbehaves badly when the path we provide isn't just right.

Indoor Antenna?— This is a good opportunity to inject a note of optimism. There are many installations where it is *not* necessary to put up an outdoor antenna on the roof. *If* the receiver is located near enough to the broadcasting stations, and *if* reception isn't shadowed by nearby tall buildings, and *if* a number of other things, it may be possible to get very satisfactory reception with an antenna located right in the living room. It may be on a convenient pedestal placed on top of the receiver, or hid under the rug. Or it may even be built right into the cabinet, which is the case for many receiver models.

In any of these cases, the transmission line problem almost ceases to exist. But in many other cases, the rooftop antenna is a necessity. And for these cases we must use a suitable transmission line, properly installed.

What a Transmission Line Is. – We can't go into all the deep theory of transmission lines at this point. We just aren't ready for it. But we can indicate by means of a definition what we expect the transmission line to do for us in the way of discouraging misbehavior by the signal. Here it is:

A transmission line is a system of electrical conductors with uniformly distributed characteristics, designed to convey electrical energy from one place to another with as little loss and distortion as practicable. Tuck that definition away in your mind, for we'll refer back to several points contained in it.

There are several kinds of transmission line commonly used in television receiver installation. The simplest, and the only one we shall consider in this lesson consists of two stranded copper conductors, embedded in a plastic insulating material so they are held in a uniform distance apart, thus:

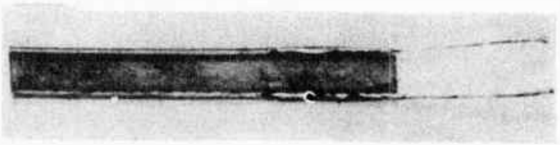

Fig. 2-22

This type is called *parallel wire transmission line*, or more commonly, simply *twin lead.*

Transmission Line Characteristics. – Look back at that definition we gave at the beginning of this section, and notice those final words: "...with as little loss and distortion as possible."

Any transmission line will dissipate some of the energy fed into it, and deliver less at the receiver than it takes from the antenna. Naturally, we want to keep this loss as low as possible. The parallel transmission line ordinarily used has a few disadvantages. For instance, it can pick up interfering noises where local electrical disturbances are bad. This is one of the cases in which it may be necessary to choose a different type of line. In installing the parallel wire line, it is very important to keep it away from other lines, conduits, metal surfaces and wet walls – any of which can "steal" energy from the line if they are too close, and so reduce the strength of the signal delivered to the receiver terminals.

Impedance Matching. – So far as the ordinary kitchen-mechanic-electrician is concerned, if current flows into one end of a wire, the same current exists all along the wire, and comes out the other end. But this is another one of those things that doesn't hold true at television frequencies. In order for all the signal in the transmission line to come out at the receiver terminals, it is usually necessary to satisfy a condition called *impedance match. Impedance,* for those of you who may not know, is the opposition offered by an electrical device, line or circuit to the flow of an alternating current, such as our television signal. It is measured in *ohms.*

Practically all receivers are designed for an impedance of either 72 ohms or 300 ohms at the signal input terminals. The parallel wire type of line has a *characteristic impedance* of 300 ohms. Let's skip over what "characteristic impedance" is for now. So far as we are concerned at present it means that if, for example, a transmission line with a characteristic impedance of 300 ohms is connected to a 300 ohm receiver input, the line will deliver all of its energy to the receiver and you will get the best signal.

If this condition is *not* met – that is, if the receiver impedance and the characteristic impedance of the line are not *matched* – some of the signal energy is *reflected* back up the line. Is this bad? Well, yes – just how bad depending on one other thing. If the reflected signal is strong, and encounters another *mismatch* at the antenna, it will be reflected back down the line to the receiver.

We now have two signals arriving at the receiver, one lagging the other slightly, just as when the radiated signal was reflected from a building to produce a ghost image on the kinescope, as explained in Lesson 1. The effect here is just the same, except that there may be *several* ghosts instead of just one, depending on how many times the signal is reflected up and down the line before it becomes too weak to affect the receiver circuits. This phenomenon of a ghost caused by mismatching of the transmission line is called *line bounce* or *line reflection*. Whether enough reflection takes place to cause the multiple images depends on the degree of mismatch. To complicate things further, if the line and receiver are matched at one frequency, they may be mismatched at a greatly different frequency. However, since the spacing of the multiple images depends on the length of the transmission line, they are not generally noticeable if the line is less than about 150 feet long.

This is getting complicated, isn't it? Well, we've mentioned before that television isn't simple. But if you take the complications one at a time, and learn what to do to correct the resulting difficulties, they shouldn't bother you too much.

A TYPICAL INDOOR ANTENNA INSTALLATION

2-7. Before the performance of the receiver can be checked thoroughly, some form of antenna is necessary. Although a rough check of the receiver can be made with a temporary antenna, it isn't usually worth while. When the installation is being made by a two man team, the general practice is for one man to begin unpacking and setting up the receiver, while the other starts the antenna installation. At some points, the men may have to assist each other. Or the entire job may be done by one man. This is especially likely in areas where it is known that an indoor antenna usually gives satisfactory reception.

There are several types of indoor antenna in use. One of them will be described in this section, and its installation explained briefly. Later lessons on antennas will cover other types of indoor antennas, including any that may be built into the receiver cabinet.

Preliminary Steps. – Before going into the details of an indoor installation, however, let us take the time to review briefly some preliminary steps for all installations. The installation job starts at the service shop. When there are two men on the installation team, the senior team member is responsible for the truck and is in charge of the installation. Naturally, he will do most of the talking whenever that is necessary in the customer's home. When you are the whole one-man installation crew you will have to take care of everything.

The first thing to do is check the installation truck and everything in it to be sure that nothing is missing for the day's work. The truck should have a complete complement of parts – usually enough for a full week. In general, the truck should have enough parts for from 10 to 15 complete antenna installations of the type generally used in your district. After the work orders for the day are picked up, you are on your way to the installation job.

Assume for now that conditions are just right for making an indoor antenna installation. The customer is willing to have an indoor antenna, the location is no more than about 10 miles from the television stations so that there is enough signal, there are no multiple path reflections to produce ghosts in the picture and interference is negligible.

Here is an opportunity to use the indoor antenna and obtain its advantages. And there are plenty of advantages. With an indoor antenna there is no long transmission line to pick up interference, no lightning arrestor is needed because there is no danger from lightning with the antenna indoors, no one has to climb up to the roof and there are no worries about the antenna falling or changing position in a high wind, and there is no problem of obtaining the landlord's permission. With the extended rod type of indoor antenna decribed in the next paragraph, the customer can adjust the length and orientation of the antenna himself.

Extended Rod Antenna. – The simplicity of an indoor installation is illustrated in Fig. 2-23.

Here an extended rod dipole antenna is placed on the receiver, where the rods can easily be adjusted. Their lengths can be changed and their angle adjusted to give the sharpest possible

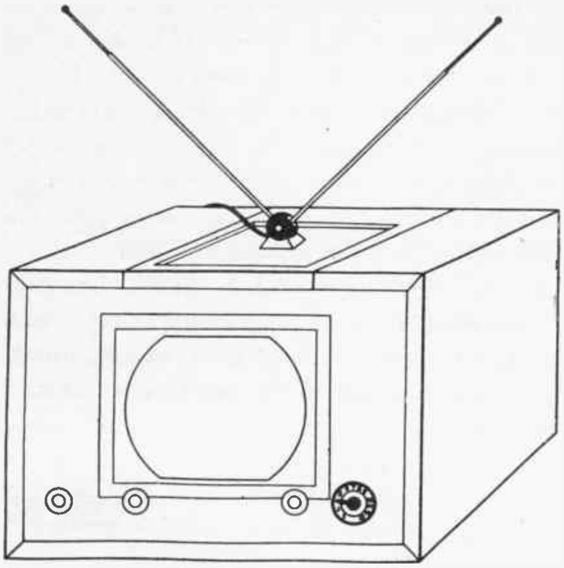

Fig. 2-23

tuning for the best picture and sound on each station. Very often a ghost in the picture can be eliminated by turning the antenna to favor the direct signal. A short length of Bright Picture transmission line comes with the antenna. Simply connecting it to the antenna posts on the receiver completes this indoor installation.

The position of the receiver in the room should be determined early in the installation because it will affect either the placement of an indoor antenna or the way the transmission line will run for an outdoor antenna. When you expect to put an indoor antenna on the receiver, it is a good idea to have the set against a wall that faces in the direction of the broadcast stations. However, placement of the set depends a great deal on customer preference. When the customer's choice is obviously going to produce poor results, you should convince her of this fact.

Remember that the antenna location is what is important, and it doesn't have to be on the receiver. If you find a spot for the indoor antenna that produces good results you can always add the required length of transmission line. The line is routed neatly to the receiver and kept out of sight as much as possible by running it along the baseboard of a wall or under the edge of the wall-to-wall carpeting. It is kept in place by fibre-headed tacks.

A SIMPLE OUTDOOR INSTALLATION.

2-8. When the picture and sound are not good enough with an indoor antenna, you will have to mount the antenna on the roof. It is usually possible for an experienced installer to tell in advance whether he will have to do this in a particular location. Just how to decide what kind of antenna will be needed is discussed fully in a later lesson. There are many possible complications, but for now we shall take the common case of a simple dipole antenna and see what is required in this outdoor installation. In many cases where an outdoor antenna is required, a simple dipole will furnish plenty of signal for the proper operation of the receiver.

A typical installation of an outdoor antenna on a two-story frame house looks like this:

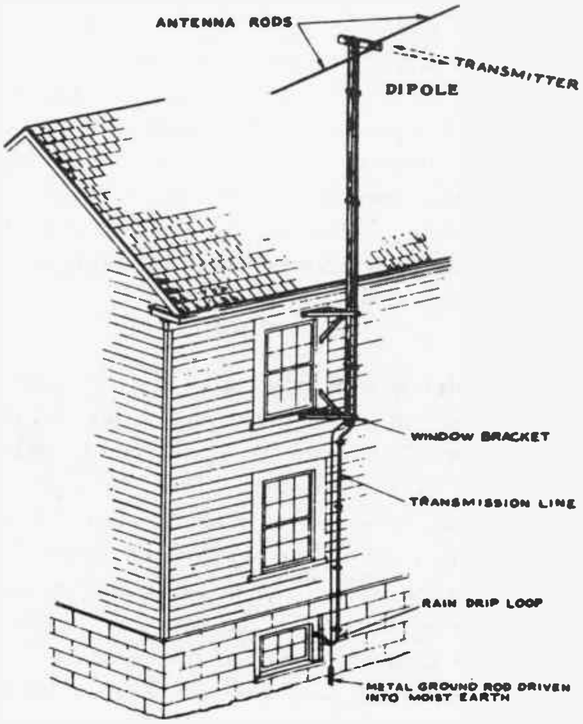

Fig. 2-24

Let's examine the installation step by step, and see what has to be done. First comes the assembly of the antenna itself. For the simple dipole this is pretty easy. Each rod of the dipole slips through a hole in the support arm and is held tight with washers and a nut that screws onto the end. With both rods attached, and the support arm clamped to the mast, the antenna assembly is completed.

Mounting Brackets. – To mount the type of window brackets shown in Fig. 2-24, mounting holes are marked on the window sills and frames, and then the brackets are removed to drill 3/16 in. holes for 1 in. lag screws. After the brackets are mounted, the mast can be slipped in.

Of course, you should tell the customer in advance how and where you are going to make the antenna mounting so that there will not be any complaints later on this score. Presumably, the spot was chosen because you know that the location will be a good one for the antenna. Once in the brackets, the mast can then be rotated easily for the best orientation of the antenna, and clamped tight with U-shaped bolts.

As you can see, with an outdoor antenna installation it is usually necessary for you to climb a ladder and use tools such as drills, pliers and a hammer. That is a good time for you to think about safety – your own and the safety of others. Use your common sense and don't take any chances when using the ladder and the tools. It is smart to be careful in your work; it's plain dumb to take unnecessary chances of hurting yourself.

Transmission Line Routing. – For the transmission line run, small round lugs at the end of the line are slipped onto the dipole rods to make connection to the antenna. Then the line is brought down by means of standoffs attached to the mast pipe. Screw eye standoff insulators are attached to the wall of the house to support the line and bring it down to the basement window. Always do a neat job on the transmission line run, with no slack, and keep the line as unobtusive as possible. Run it straight down a wall – not sloping or draped across – and keep down to a minimum the length of the line that is horizontal. The line should be kept away from rain gutters and other metal parts of the house.

Whenever possible, it is best to run the transmission line down to the basement and then up through the floor to the receiver location. As shown in Fig. 2-25, a 7/16 in. hole is drilled for the line at the side of the basement window. The hole is drilled to slope *downward toward the outside* so that no water can seep in when it rains. The transmission line is run through an insulating bushing or loom, and then both ends of the hole are plugged with plastic wood or a rubber stopper to make a neat professional appearing job. Then run the line in the basement to a point under the set. A 7/16 in. hole can be drilled through the bottom moulding of the baseboard at the receiver location to bring the line up to the set, where it is finally attached to the antenna terminals on the receiver.

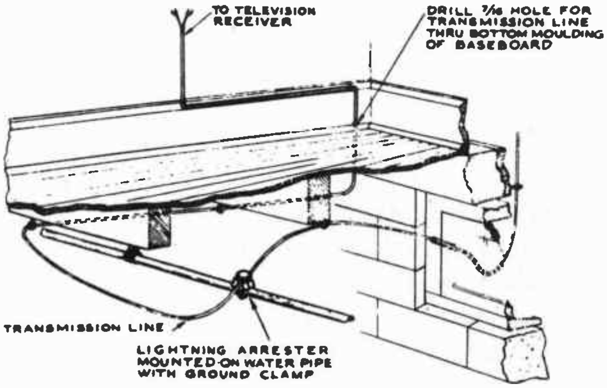

Fig. 2-25

Lightning Protection. – There are two more important steps in the installation job: (1) the need for grounding the antenna mast, and (2) inserting a lightning arrestor in the transmission line run. A connecting wire must be run from the mast to a good ground connection like a cold water pipe, or to a metal ground rod driven into moist earth as shown in Fig. 2-24. The lightning arrestor for the transmission line is mounted as near as possible to the point where the line enters the building.

These two precautions are very important, although it may not seem so when you are making the installation on a clear, sunny day. They prevent static electrical charges that tend to build up on the antenna after a period of time, and protect the receiver and antenna from serious damage by lightning.

Possible – and Probable – Complications. – This completes our overall view of a simple outdoor installation. However, not all installations are as easy as this. The complications will be explained in detail in later lessons on antennas. As an example, to pick up more signal or place the antenna further away from a source of interference, the antenna may have to be mounted higher than shown here. Then it will be necessary to run sturdy guy wires to the mast in order to hold the antenna steady in a strong wind. Different mountings may be used for the mast, depending on whether it is mounted on a chimney, a flat roof, an elevator penthouse of an apartment house roof or on a brick wall.

In many locations it is desirable to use an antenna that has an added rod mounted behind the dipole antenna. The additional rod is called a *reflector*. It makes the antenna receive signals best from the front, with little pickup from behind, to help eliminate ghosts in the picture caused by a reflected signal that might be received from the back of the antenna. Loading wings may be added to improve the reception of high band stations. In some locations it may be necessary to use a dual-band antenna with the normal antenna for the low band television stations, and a shorter antenna added for the high band stations. Besides the more elaborate assembly, there is then a "matching harness" consisting of sections of line to match both antennas to a common transmission line. If the noise picked up by the transmission line is very severe, it may be necessary to use special shielded coaxial cable for the transmission line run.

PUTTING THE RECEIVER IN OPERATION

2-9. Now we can talk about the job of putting the receiver in operating order so we can see a picture on the screen. Assume you are in the customer's home, ready for the installation job. Either you've already installed the antenna and transmission line, or your team mate is doing this job, and it will be finished by the time you need it to check the reception. We'll outline briefly now the following parts of the installation job: (1) unpacking (if any), (2) setting up the picture tube for proper operation, and (3) correct use of the front panel operating controls in tuning the receiver. The complete explanation of these operations, and of the adjustment of the set-up controls, will be given in Lesson 3.

The first thing to do toward putting the receiver in operation is *check the model number and serial number of the set*, because there are important differences among various models. Before even going to the customer's home, you should have read the Service Data notes, instruction book and unpacking instructions for the receiver model being installed. Don't wait until you're in the customer's living room to read instructions – the customer could easily get the idea that you don't know too well what you're doing, and that's hardly the way to win the customer's confidence.

If the set has not been unpacked yet, follow the specific unpacking instructions that are available for each receiver model. By doing this you can be saved a lot of headaches. Something as simple as failure to remove all the packing material can cause trouble in operation of the set.

Installing the Kinescope. – This can be considered in two parts: putting the picture tube in its mounting on the receiver chassis, and making the kinescope adjustments necessary for getting a good picture on the screen. At the present time some receivers are shipped with the picture tube in place, which means that it will not be necessary for you to insert the kinescope. However, this is only a convenience for shipping and does not mean that the kinescope is ready for operation. The installation adjustments for the picture tube still have to be made.

For those receivers that need to have the picture tube inserted, remove the kinescope from its carton, following the unpacking instructions. The kinescope is inserted in its chassis mounting from the front of the receiver, like this:

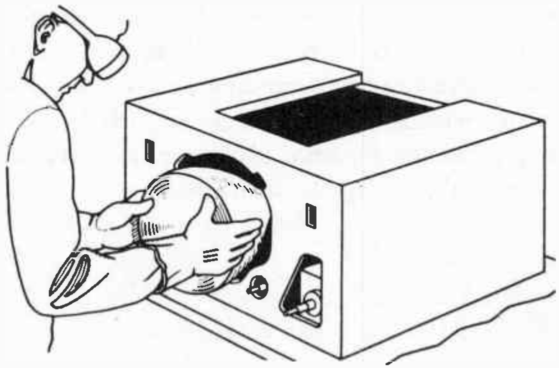

Fig. 2-26

Check with the Service Data manual of the specific receiver for exact instructions on removing the shipping screws and inserting the kinescope because this can be a little tricky and you can waste a lot of time if you don't know exactly what to do. The detailed procedure will be explained in Lesson 3. After inserting the tube, set the front of the kinescope on its cushion rest or support brackets and the tube can then support itself.

When putting back the panels it is generally a good idea to leave the mounting screws a little loose to make sure that the picture tube is centered and straight with respect to the mask before the final tightening. The customer will be very critical on this point because it spoils his enjoyment of the picture if he can see an edge of the kinescope. Do not force any panels against the kinescope, and don't forget to clean the face of the picture tube and the front panel safety glass.

The insertion of the kinescope requires that you first remove the front panel; but to center the kinescope you'll need the mask over the front of it for a reference, and that requires that the front panel be replaced before adjusting the support brackets.

The ion trap magnet can then be slipped over the base onto the narrow end of the tube, and the kinescope socket attached to the tube base. The center of the tube base has a guide that fits into a notch in the socket. With these in line, the socket can be pressed firmly home to make good connections with the tube base. Then connect the high voltage lead to the picture tube.

Kinescope Precautions. – There are several important safety points for you to keep in mind when installing the picture tube. First of all, always remember that if the tube breaks someone may be hurt pretty badly by the flying glass. Because of the large surface area of a picture tube and the vacuum within, the kinescope is more liable to breakage than a small vacuum tube. So handle the tube gently and use common sense when working with it. *Always wear safety glasses* to protect your eyes from flying glass in case the tube breaks. Keep the customer and the children away from you when handling the tube, for their own protection and so they will not distract you while you are working. However, you don't have to be afraid of the picture tube. If handled with reasonable care it will not break.

Another important point to remember for your safety with a kinescope is that the anode voltage is very high – approximately 9000 volts or more. There is danger of an electric shock if you touch the metal connector on the high voltage lead, or the anode connection of the picture tube. Besides the danger of injury from the shock, you may get so excited as to drop the tube or anything else you may have in your hand, which might cause more trouble than the shock itself. Modern television receivers use a specially designed high voltage supply so that normally there is not enough power to produce death from shock. But, anyway, *never* touch the high voltage circuits when the the power is on; and be sure that the high voltage condensers are discharged with the power off before touching any high voltage connection.

Kinescope Adjustments. – With the kinescope inserted and the leads connected, you can plug the line cord into the 110-120 volt a-c power outlet and then turn the receiver on to make the picture tube adjustments. These include positioning the deflection yoke, focus coil and the ion trap magnet. The exact adjustments for specific receiver models will be explained in Lessons 3 and 4 but we can go over the general procedure here to emphasize some important points.

The first adjustment to make is positioning the ion trap magnet. When this is not set right, the screen may be completely blank because the electron beam is not striking the screen.

To adjust the focus coil, you can move it after loosening it in its mounting. The focus coil is adjusted for fine focus in the raster, with the raster approximately centered and without any shadowed corner. You can tell when the focus is good by adjusting for clear thin scanning lines. In receivers that do not have any controls to center the picture, the position of the focus coil has to be adjusted for centering.

The deflection yoke is positioned to align the raster on the screen with respect to the mask. When they are not aligned, the picture looks like this:

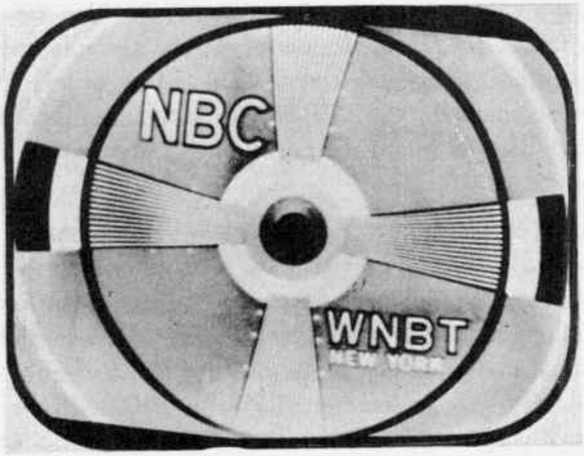

Fig. 2-27

You can rotate the yoke in its mounting to straighten the picture after loosening the holding screws. The yoke can also be moved back and forth, and it is normally placed far enough forward to be flush against the flare of the tube envelope. If the yoke is too far back, the corners of the picture may be shadowed or missing. This is because, when the beam is aimed at a corner of the picture, the electrons strike the neck of the tube and are prevented from going on to illuminate points nearest the edge of the screen.

After the kinescope adjustments have been made properly, the screws and wing nuts for the coil mountings should be tightened so that the settings will stay the same. Be careful not to disturb these settings while you are making them tight.

Simple Preliminary Check of Reception. – Before proceeding too far with the details of the installation you can make a simple preliminary check of reception to see that the receiver is operating properly. Once the picture tube has been installed it is possible to see on the screen various aspects of normal receiver operation.

The first requirement is that there be a raster. Assuming that the kinescope adjustments have proceeded normally you will have a clear raster with sharp scanning lines. If all you can get is a horizontal line on the screen, there is trouble in the vertical scanning circuits of the receiver. If no light at all can be obtained on the screen there may be trouble in the kinescope high voltage circuits, or the picture tube may be defective, assuming that the kinescope installation adjustments have been made properly and the ion trap magnet is correctly adjusted and working properly. If there is any such trouble with the receiver the best thing for you to do is to follow the advice of your branch office on what to do about it.

When you have a perfect raster on the screen a large part of the job of obtaining a picture is done, because all that remains is the signal circuits for the picture and sound. Even without an antenna this can be checked to some extent by the following very simple procedure. With the volume control turned all the way up (clockwise) you should hear loud rushing noise from the loudspeaker. Similarly, when the picture or contrast control is turned fully clockwise there should be noise in the raster. This shows as speckled dots throughout the raster. In a strong signal area, the noise in the raster will not show by turning the PICTURE control fully clockwise, because the circuit will be overloaded. The picture will be very much distorted, if the channel selector switch happens to be positioned correctly. These checks indicate that at least the tubes are working in the signal circuits.

To check further and see that you can actually get the desired picture and sound, you will have to turn the channel selector switch to a station that is broadcasting at the time and supply some signal to the antenna binding posts. For just a preliminary check of reception you may get enough signal for sound and a picture by putting your finger on the antenna binding post, or setting up a simple indoor antenna. It may be that the sound will be noisy and the picture moving or torn apart in diagonal segments, indicating that additional tuning adjustments have to be made. But with this preliminary check of reception at least you know that the receiver is operating and you can continue the installation with the expectation of obtaining a good picture and good sound.

Front Panel Controls. – With the receiver operating normally, an antenna installed, and the set-up adjustments on the receiver chassis made correctly, it will be possible to obtain the desired picture and sound for all television broadcast stations in the locality by proper use of the front panel controls. In order to have a specific case in explaining the controls and tuning, we'll discuss the model 9T-240 as a typical receiver. The front panel looks like this:

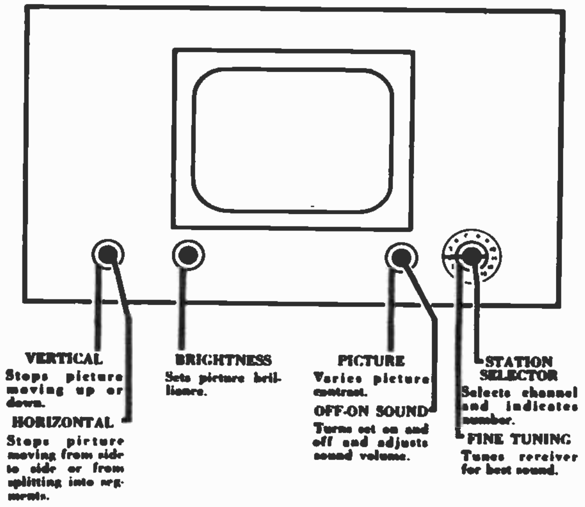

Fig. 2-28

Only four positions are used for the seven controls because the dual control shafts and the dual knob arrangement makes a neater appearance than having the controls spread out. Starting at the right of the panel, as you would face it to operate the receiver, there is a dial with the channel numbers for the STATION SELECTOR switch. This is a bar knob that you turn to tune in any channel from 2 to 13. The round knob with the selector switch is the FINE TUNING control. As its name implies, it provides fine tuning for any channel selected to bring in the best sound and picture.

Next to the tuning controls there is another dual control on this model with the OFF-ON SOUND volume as one control (a small knob) and a larger round knob for the PICTURE or contrast control. The sound control is adjusted to make the sound louder or softer, as in AM broadcast radios. The picture control is adjusted for the desired contrast in the picture.

At the left side of the front panel, the next control is the BRIGHTNESS, which adjusts the overall brightness of the picture. In this receiver model, the BRIGHTNESS control is by itself and not paired with any other control.

At the extreme left are the dual controls consisting of the HORIZONTAL hold control in the inner position (small knob), and the VERTICAL hold control on the outside (large knob). The HORIZONTAL hold control holds the picture together by keeping the horizontal line scanning synchronized. The VERTICAL hold control holds the picture in frame, preventing it from moving vertically.

The position of the controls will of course be a little different in various receiver models because of the chassis layout. In receivers earlier than the 9T240 model the BRIGHTNESS control was at the extreme left, with the HOLD controls next to it. In later receivers the PICTURE control may be grouped with the BRIGHTNESS so that it is more convenient to adjust these together, as is usually necessary. The OFF–ON SOUND control may then be by itself or grouped with a tone control when there is one.

Tuning the Receiver. – If you don't know already, it will not take long for you to find out that correct use of the front panel operating controls can easily be the difference between very bad results and a beautiful picture with excellent sound. Of course, you may know how to adjust a receiver to get the best results from it. But you probably do this intuitively, and when called upon to instruct a customer you may be at a loss to know how to express in words those little things you do to obtain peak performance. You can study the tuning steps that follow and try to adapt them to your style, going over the process in your mind and practicing what you will say to the customer so that she can understand and remember your instructions.

Assuming that the picture tube has been installed, the set-up controls on the receiver chassis have been adjusted and the antenna is connected, what we'll do next is make a trial run of tuning the model 9T 240 receiver, paying special attention to the effects you may observe while tuning. The steps given here follow the procedure given in the customer's instruction book that comes with the set. Since you will have to instruct the customer, it is a good idea to read the instruction book carefully, even though you are entirely familiar with the operating procedure yourself.

The receiver is turned on and tuned as follows:

1. Making sure that the line cord is plugged

in, first turn the OFF—ON SOUND control slightly clockwise to switch the receiver on. After you hear the switch click, turn the control about one-half turn further.

2. Set the STATION SELECTOR switch to the desired channel number. Of the 12 positions there will be stations broadcasting on only some channels. You ought to be familiar with the television stations in your locality and when they are on the air.

3. Allow about a half-minute for the set to warm up. The sound may come in before the picture does, and there may be diagonal bars on the screen for a moment before you see the picture, but this is normal.

4. Assuming that the desired station is broadcasting, music, speech or tone should be heard. Now the FINE TUNING control should be varied for the best sound. This is where the sound comes in clear and loud with minimum background noise. The SOUND volume control can then be adjusted for the desired volume. After the receiver has been on for a few minutes, it may be necessary to readjust the FINE TUNING control a little, as the oscillator in the front end of the receiver changes frequency slightly when it warms up.

It may be possible to obtain sound at three adjacent positions of the FINE TUNING control. The middle of the three is the correct tuning position, which eliminates any sound bars appearing in the picture. The sound bars look like this:

Fig. 2-29

They usually change in width with the sound volume, since they are caused by the sound signal in the picture amplifier circuits of the receiver.

Adjusting the FINE TUNING control just right is very important in receiving the best picture and sound. *If the control is far from the correct setting there will be no sound at all.* Sometimes there are very small wiggly lines in the picture because the fine tuning is not exactly right, and they clear up as soon as this control is set properly. *Always adjust the FINE TUNING for the best sound with minimum background noise.* If this does not seem to provide the best picture, either something is wrong with the set or there is not enough signal for the receiver and you'd better start doing something about a better antenna.

5. If necessary, adjust the PICTURE control for the desired contrast in the picture.

When shutting off the set, just turn the OFF—ON SOUND control to OFF, (counterclockwise), noting the click of the switch as it is turned off. The screen illumination may persist for a moment on some picture tubes after the set is turned off but don't worry about this, as it is entirely normal.

When the other front panel operating controls have to be adjusted, the following additional steps should be taken. Don't be afraid to turn the knobs but do not force them beyond their stops. After turning the set on and setting for the desired channel, as explained previously in steps 1 to 4, you can proceed as follows:

With the PICTURE control at approximately its mid-position, adjust the BRIGHTNESS control until light just barely shows on the kinescope screen. Then set the PICTURE control for the desired contrast in the picture, and the BRIGHTNESS control is re-adjusted to make the retrace lines just disappear from view. Fig. 2-30 on the next page shows the retrace lines as they appear in the picture when the BRIGHTNESS control is set too high.

It is important to remember the difference in function between the BRIGHTNESS and the PICTURE controls. The PICTURE control affects both the brightness and the contrast you see on the screen, and should be adjusted for a pleasing picture. The BRIGHTNESS control should be at the point where the retrace lines are blanked out, with the picture control set for the best contrast and brightness in the picture.

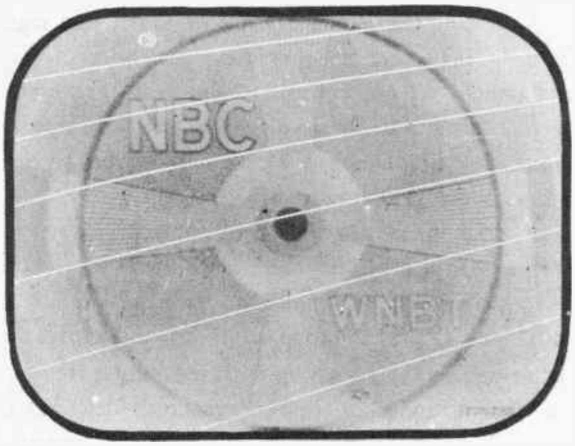

Fig. 2-30

8. Adjust the VERTICAL hold control to make the pattern on the screen stop moving up or down. When the picture drifts vertically with a black horizontal bar showing, or there are several pictures moving up or down the screen, as shown below, adjust the VERTICAL hold control to stop the motion.

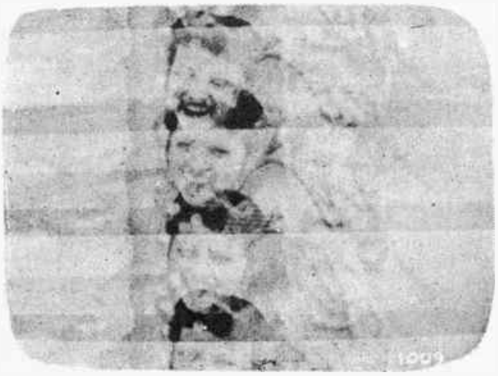

Fig. 2-31

If the VERTICAL hold control is completely out of adjustment you may not recognize the picture, as it appears sliced into many horizontal segments running up or down the screen. Anytime you see duplicate images one above the other rolling on the screen, adjust the VERTICAL control to the point that just stops the picture and holds it in frame.

9. Adjust the HORIZONTAL hold control to eliminate diagonal bars and synchronize the picture horizontally. The HORIZONTAL control should require little attention unless disturbed. The picture will usually pull itself into synchronization in less than a minute after the set is turned on, and will stay synchronized for the duration of the program. If the HORIZONTAL control is misadjusted counterclockwise from its correct position, the picture may remain synchronized for a time but only until some disturbance throws it out of synchronization. The picture will then be sliced diagonally into segments running upward from left to right, as shown in Fig. 2-32-a. To correct this condition, turn the HORIZONTAL control slowly clockwise until the picture snaps into synchronization, and then turn the control slightly beyond (20 or 30 degrees).

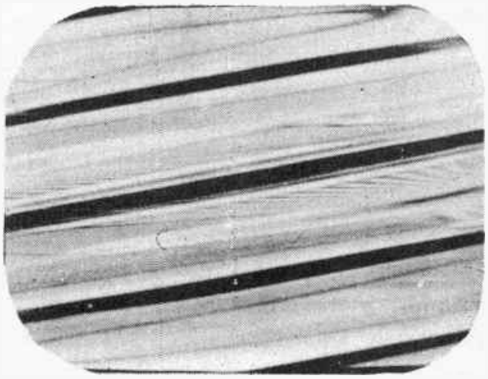

Fig. 2-32-a

If the HORIZONTAL hold control is misadjusted clockwise from its correct position, the picture may bend and shift toward the right, or split into diagonal segments running downward from left to right as shown in Fig. 2-32-b.

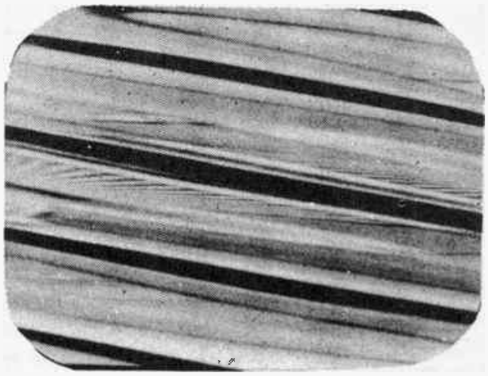

Fig. 2-32-b

To correct this, turn the HORIZONTAL control counterclockwise until the picture falls into synchronization, and then turn it about 90 degrees beyond. This will give approximately the same setting as for the adjustment just described to eliminate the upward diagonal bars.

The HORIZONTAL control, once set correctly, should require resetting only under conditions of extreme variations in temperature or humidity, or unusual changes in tube characteristics due to aging. The reason for this extremely stable horizontal synchronization is the *synchroguide* circuit used in this receiver, which automatically holds the horizontal scanning circuit synchronized in the presence of all but the most severe noise.

9. To change from one station to another all you will have to do is switch the channel selector, adjusting the fine tuning slightly for the best sound. Usually, the picture slips vertically for one frame when changing stations, but this is normal, and the vertical synchronizing circuit will hold the picture steady for the new station after it moves into frame. This happens often when a switch in program is made at the broadcast station, and is nothing to worry about. If the sound and picture do not come in just right on the new station, however, you can go through the fine tuning procedure again.

Summary. – We have tried in this Lesson to explain what goes on at the receiver end of the television system, and how this affects the installation job. If you now realize that the aim of every installation job is to make a satisfied customer, and if you know what a good picture is, know the main steps in setting up the receiver, and can see the factors involved in an antenna installation, this lesson has accomplished its purpose.

◆

NOTES

TELEVISION SERVICING COURSE

PREPARED BY

RCA INSTITUTES, INC.
A SERVICE OF RADIO CORPORATION OF AMERICA

HOME STUDY DEPARTMENT
350 West 4th St., New York 14, N. Y.

LESSON THREE

RECEIVER INSTALLATION (PART 1)

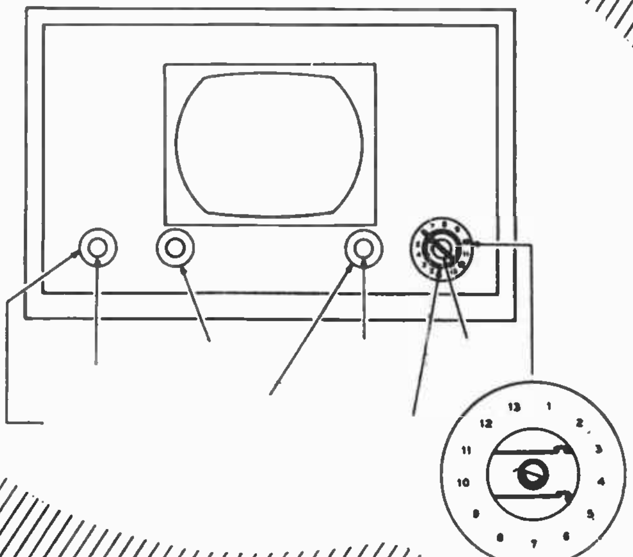

Lesson 3

RECEIVER INSTALLATION PROCEDURE

3-1. There is more to the job of setting up the receiver in the customer's home than just plugging in the line cord and turning on the power. In Lesson 2 we outlined the essential steps involved in receiving the television signal, from the time it leaves the transmitter to the reproduction of the televised picture on the kinescope screen and sound by the loud speaker. That covered considerable territory since the overall picture had to include, in addition to the operation of the receiver itself, the television signal and how it got to the receiver location, by means of the antenna and transmission line. In this lesson we will concentrate on the receiver, and how it should be set up and adjusted to get the best possible picture.

Steps of the Installation Job. – Installation of a television receiver in a customer's home involves these essential steps:

1. Contacting the customer
2. Unpacking the receiver
3. Putting the receiver in operating condition
4. Installing the antenna and line
5. Instructing the customer
6. Cleanup and departure

Each of these steps has several details, of course, and these will be taken up as we discuss each step in order. In describing the whole procedure, it will be convenient to choose a typical receiver to use as an example, such as the RCA Model 9T240 shown in Fig. 3-1. However, you should keep in mind that this is merely an example, and that there will be differences between sets of various makes and models. These differences need not upset you, though, if you will study the manufacturer's service notes for the particular receiver you are going to install. After all, in spite of individual differences, receivers are doing essentially the same job – providing a television picture. You'll find that this same set of steps can be followed in installing any set, barring an occasional exception, as when, say, the set is already unpacked. Naturally you can't unpack it again!

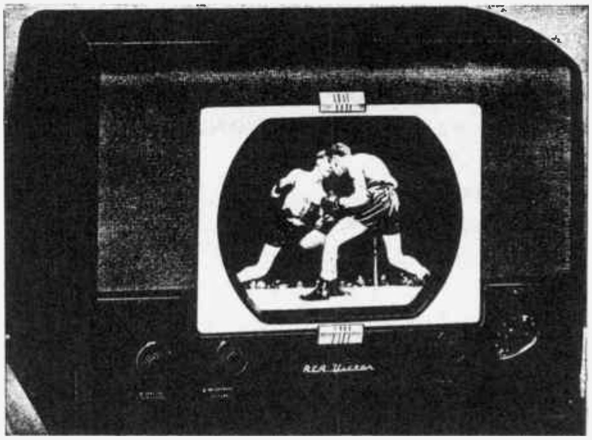

Fig. 3-1

Contacting The Customer. – The job of making an installation begins as you approach the front door, or even as you pull up to the curb with the truck. This is true because the minute the customer becomes aware of you, you are making an impression, and the impression you make has a lot to do with the customer's ultimate satisfaction. No matter how good your installation job, and no matter how well the set works, if you run over the customer's dog when you drive up, or drop the ladder into the new flower bed, you're not going to be a popular man. On the other hand, if you are considerate and thoughtful, and do a good efficient job, you'll find the customer will be a lot more reasonable about some defect beyond your control, like a bad smear at the transmitter... or bum jokes on a program.

Introduction and Identification. – When you go to the door, it is important to let the customer know who you are and what you are there for pretty early in the conversation. There are, unfortunately, quite a number of petty door-to-door rackets and swindles. Some customers will be overly suspicious, others will not be sufficiently cautious for their own good.

Your best move is to present your identification card, if you have one (showing your name and occupation, of course), with a normal greeting, and a brief remark or two explaining why you have come. This usually results in an answer from the customer, and an invitation to come in and begin your work. This little point of establishing confidence with the customer by showing that you have a legitimate reason for calling will not often become important, but should be properly done, nevertheless. In many cities, sales and service personnel making door-to-door calls must have an identification card issued by the Police Department, or some other agency of the local government. If you're operating your own business, better check up on this. If you're working for someone else, chances are they are responsible for taking care of this detail.

Having identified yourself and upon being asked in to begin your work, make sure you don't track in mud or dirt, or bang your tool kit into walls or furniture.

Fig. 3-2

The Customer's Wishes. – In almost every installation, the customer will have some ideas about where the receiver is to be placed, and perhaps also where the antenna can be mounted, if an outside antenna is used. This latter point is usually based on the appearance of the building, or perhaps the landlord's restrictions on such structural alterations. These are pieces of information you should get right away, so you can see how they are going to affect the job, providing of course that it is practical to follow the customer's wishes. Also, if the customer is not the owner of the building, it is necessary to have the signed permission of the owner or his legal agent if an outside antenna is to be erected. Failure to obtain this permission on the part of the owner may result in trouble later in which you may be involved, so make sure the tenant *has* obtained permission before you start putting up the outside antenna.

PLACING THE RECEIVER AND ANTENNA

3-2. The dealer usually unpacks the receiver from its carton or crating when he delivers it to the customer. However, this isn't always the case, so sometimes you'll have to unpack it yourself. If you are not familiar with the way a particular set is packed, it is quite possible to damage it by carelessness in unpacking. There is little you can do to offend him more. About all that's really required here is to use common sense and be careful, but make sure you do, every time.

Factors Affecting Receiver Placement. – In addition to the customer's personal wishes, there are some other things that influence the placement of the receiver. Whenever possible, it's best to put the receiver right where the customer wants it. But some of the factors taken up here will have considerable effect on the service life and performance of his set, and some will affect the appearance of the picture. Naturally, it's your job to point these things out to him, and explain why they may make a given spot less desirable than some other one.

With a television set, the picture is the main thing, of course. So be sure the spot chosen by the customer is one in which the set can provide a good picture, that can be seen from as much of the usable part of the room as possible. Don't put it where a glaring light shines on the screen, or where there's a glaring light right next to the set, for that matter. Either arrangement will interfere seriously with the customer's enjoyment of the picture, and very likely will result in a callback for relocation. Remember also that things are sometimes much different at night than in the daytime (other lights on, etc.), and vice versa. Strong sunlight through a nearby window, or even outside advertising sign may cause trouble.

Mechanically, there are also a few points worth remembering. The line run and power cord must be protected from accidental damage, and they should also be reasonably short and convenient. Also, they should usually permit moving the set for cleaning around it. These things are seldom a problem, but should not be forgotten.

Electrically, the only serious consideration is the use of either an indoor or internal antenna. When one of these *must* be used, other considerations in placing the set, will often have to be given secondary importance, if reasonable reception is to be had. In case you are doing one of these jobs, you'd better try out reception first, and *then* choose the final spot with the customer's aid and approval.

Fig. 3-3

Choice of Indoor vs. Outdoor Antenna. – For proper receiver operation it is important to deliver a strong clear signal to the receiver input terminals. In most areas within 10 miles of a television transmitter and in many cases even farther away, an indoor antenna can pick up and deliver a satisfactory signal to the receiver. You can usually use an indoor antenna if:

1. The pictures are clean and of good quality on the channels the customer wants.
2. These stations can be had with *simple* relocation or turning of the antenna.
3. In a console model receiver, the AM and FM broadcasting reception is satisfactory with the indoor installation.
4. The customer or landlord will not permit an outdoor installation. The reception may or may not be good. In some cases, an indoor antenna will have to be used, even though its performance is poor. The customer will have to put up with the reception obtainable, good or bad, and this fact must be made clear to him.

In the following cases an outdoor antenna must be used:

1. The customer expresses reluctance or opposition to the use of an indoor antenna.
2. Reception with an indoor antenna is too weak on stations the customer desires.
3. The signals, when using an indoor antenna, are affected seriously by ignition and other types of local interference.
4. The picture is affected by persons walking about the room.
5. The location of the indoor antenna presents a hazard to children or pets.
6. A console set with AM or FM does not operate well with the indoor antenna.

A good policy to follow, from the point of view of both the customer and the company, is to use the most economical installation that will deliver a satisfactory signal . For this reason the indoor installation should be used wherever it will work well.

In many metropolitan areas, where the space on the roof of apartment houses is restricted, there are already too many outdoor antennas to give interference-free reception. Fortunately, many of these apartment houses are in strong signal areas where an indoor antenna may work well.

If there are other outdoor antenna installations in the neighborhood, you may have a selling job to do. Your customer may feel that if Joe Doakes down the street has an outdoor antenna, he needs one too. And he may be right. But if you have satisfied yourself that an indoor antenna will give satisfactory reception under all ordinary conditions, there are a number of selling arguments you can use to convince the customer.

You can point out that with an indoor antenna the customer can move the set around the room or even to another room. Men, particularly, like the idea of experimenting. Then, again, there are many homes in which the ideal place for the set is in the living room during most of the year; but, in the summer the family spends most of the time in the sun parlor or porch. With an indoor antenna it is a simple matter to shift the set from one location to another. Another selling point is that an indoor antenna is not exposed to the elements. There are no storm worries – and no lightning arrestor is needed. (Avoid implying, however, that outdoor antennas are dangerous, or a legitimate cause for worrying.)

Installation methods for both indoor and outdoor antennas have already been outlined in

Lesson 2, and will be studied in detail in later lessons. Whether we use an indoor or an outdoor antenna, it is essential that we have a good signal available at the receiver input terminals for the proper adjustment of the receiver set-up controls.

UNPACKING AND ASSEMBLY OF THE RECEIVER

3-3. Most dealers selling television sets have a policy of delivering the receiver to the customer's home or other establishment, unpacking it, and inspecting it for damage or loss in shipment and handling. However, you will occasionally find yourself on an installation job where this is not the case, or where the receiver has been purchased from a private party, and transported by the seller, the purchaser, or a professional moving firm. In such cases, it will be up to you to check the set over carefully to see that it is really complete, and that all parts are in good order before you begin the installation.

Preliminary Inspection. – In most cases you will find that the dealer has fully lived up to the terms of this policy. But, in the rush of a busy season, he may have left some things undone. It is up to you to inspect the set as soon as you enter the customer's home.

Be particularly careful in looking for concealed cabinet damage. It may be necessary to do some polishing or touching up; but if damage to the cabinet or the receiver chassis is beyond your repair facilities, you should call the Branch Office for instructions.

Shipping procedures have improved to the point where most present day sets are shipped with the kinescope already installed. A special tube rest and yoke built into the receiver chassis holds the kinescope securely in place. In earlier sets the kinescope was shipped separately, and that is still true for some makes and models. When you run into a case where the kinescope needs to be installed, be sure to observe all the necessary precautions.

Unpacking the Receiver. – In the event you find the receiver has not been unpacked, you should look over the unpacking instructions for that particular model to be sure that you note any precautions required. Particularly, note whether there are any shipping screws and guards or supports that must be removed. There are such screws that hold the kinescope cushion in place during shipment. Also, guards are placed around the tubes and other parts that need special protection. *These must be removed* before you can proceed with certain adjustments. If you forget them you may run into plenty of grief.

Lay out your drop cloth in a convenient spot before starting any work. This not only looks neat and professional to the customer, but it is a real time saver for you. You can now set out your tool box and tools without danger of soiling the carpet or floor. In addition the drop cloth serves as a good place to drop any packing material, shavings, filings or stripped insulation in the course of the job. It is a great help in keeping your work neat, and preventing damage to the customer's property.

Fig. 3-4

The best method for removing a particular model of receiver from the carton in which it is packed will depend mainly upon the size and weight of the set. A small table model set can be lifted out of the carton by one man; but a larger, heavier model may require two men.

When unpacking a set too heavy to handle readily, it is best not to lift the set at all. The procedure to follow is: (1) place the carton on its side; (2) open up the flaps on the *bottom;* (3) fold them up along the sides of the carton; (4) turn the carton back to the upright position; (5) lift the carton up and off the receiver.

Incidentally, this is a good point to check up on your method of lifting heavy objects. Figure 3-5 (a and b) shows the wrong and the right way.

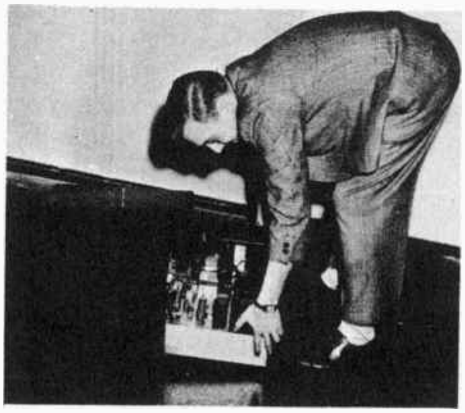

Fig. 3-5a THE WRONG WAY

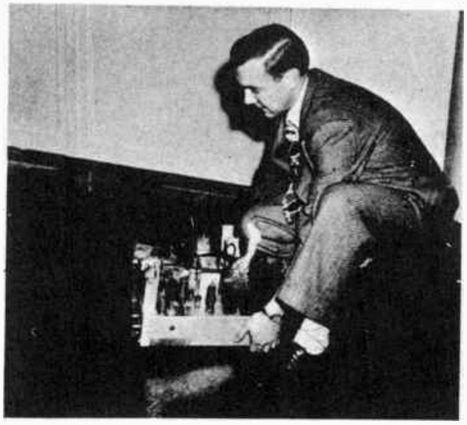

Fig. 3-5b THE RIGHT WAY

Maybe you are used to lifting things by stooping over. Brother, that ain't good! It's a swell way to develop a strained back or a hernia.

The right way, shown in Figure 3-5b, is to crouch beside the chassis, set or whatever it is that you want to lift, with your body upright from the hips up and the muscles flexing in your legs. Then, when you straighten your legs, up comes whatever you are lifting without strain on your back or abdominal muscles.

You can handle a table model television receiver this way; but when you want to move a heavy console don't be ashamed to ask for help. Two men can do a better and safer job than one — and with less danger of scratching or damaging the cabinet.

Inspection of Chassis. — Regardless of whether or not the kinescope comes already installed, you will have to look inside the cabinet as a routine inspection. That will require the removal of the back of the cabinet and, in some sets, also the top. It is best to refer to the manufacturer's instructions for the location of the screws or wing nuts that hold the front panel in place. This panel must be removed for proper inspection of the kinescope, or for installing a kinescope which has been shipped in a separate carton. The operating control knobs, normally found in a paper bag inside the cabinet, must be removed and set aside for later use.

Look for all screws and shields that have been added just for shipping purposes. In many direct view type sets (as differentiated from the projection type, which we will study in later lessons), there may be shipping screws on the kinescope cushion which *must* be removed. Their location in the RCA Model 9T240 we have chosen as an example is shown here:

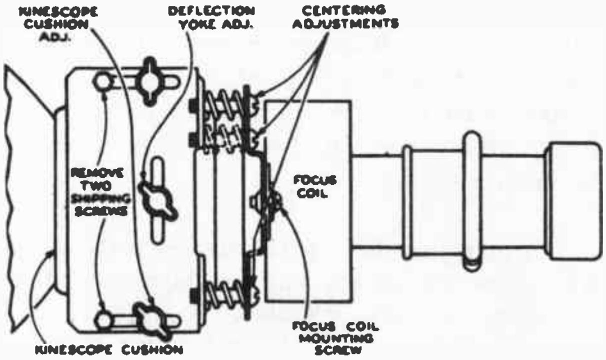

Fig. 3-6

On practically all receiver models, there is a protective cardboard shield around the rectifier tube. This must be removed. For those models in which the kinescope comes already installed, there usually is a cardboard shield around the neck of that tube. Remove this shield also.

Make certain that all tubes are in place, undamaged and firmly seated in their sockets. To seat the tubes, press them straight down. *If you have to wiggle miniature glass tubes in their sockets, be very careful.* These tubes are so small that there is very little spacing between the pins on the tube or the corresponding socket contacts on the chassis. In wiggling the tubes it is possible to press the contacts together, causing a short circuit of the tube elements – and a servicing call that could be avoided.

Care of the Kinescope. – In the event that you have to install or replace a kinescope, be careful to follow all the necessary handling precautions listed in this section. Remember that there is a high vacuum within the kinescope bulb. That is true for ordinary tubes, too, but the kinescope has a much larger surface area on which the atmosphere is constantly pressing. If the tube were accidently dropped or struck and the glass broken, air would rush into the tube with sufficient force to shatter the tube and send glass splinters in all directions. What happens is properly called an *im*plosion rather than an *ex*plosion – but, whatever you call it, it presents a serious hazard to your hands and eyes if you are not careful.

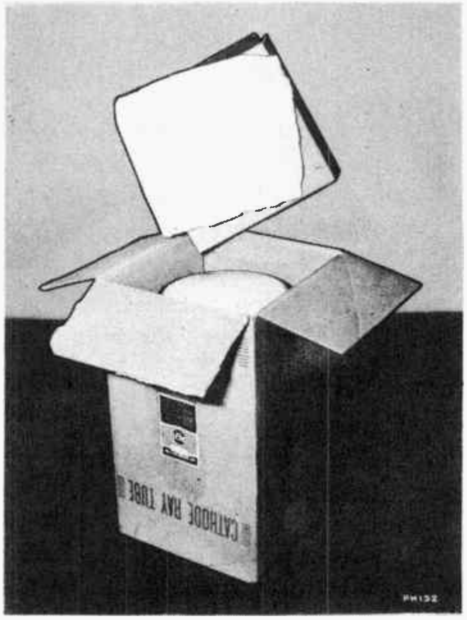

Fig. 3-7

There is a right and wrong way to remove a kinescope from its carton. A kinescope packed for shipment is placed so that, when the carton is in the normal shipping position, the screen and heavy envelope are down – and the lighter, fragile neck of the tube is up. The tube must *never* be handled by the fragile neck. It is therefore important that the carton be opened with the tube face up, as shown in Fig. 3-7.

To unpack the kinescope: (1) turn the carton so that the lettering is upside down; (2) cut the paper tape along the edges and tear open the carton flaps; (3) remove the cardboard covering the face of the tube; (4) grasp the side of the tube with both hands and lift up; (5) place the tube face down on soft clean padding.

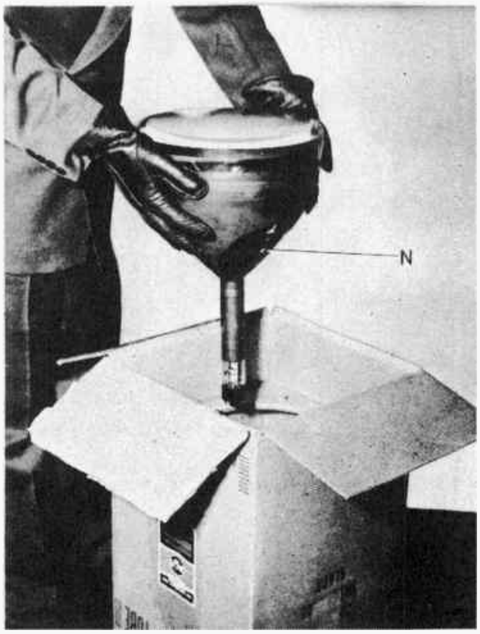

Fig. 3-8

In Fig. 3-8, showing how the tube should be lifted out of the carton, the use of gloves is shown. While gloves are desirable as a protection for the hands, their use makes the handling of the tube a little awkward. Present practice sanctions handling without gloves, but you must be extremely careful. *It is really best not to handle a kinescope without safety glasses.* A cut hand could heal without too much trouble; but an eye injury may lead to blindness.

The RCA record for handling kinescopes has been exceptionally good; but that is so because of a healthy respect for the kinescope and continued care in handling it. The rules to remember are:

1. Don't expose the picture tube until you are ready to use it.
2. Always wear goggles when handling a naked tube.
3. Keep people away at a safe distance when a picture tube is exposed.
4. Always keep the picture tube in the protective container whenever possible. Always place an exposed tube on some sort of clean soft padding when necessary to set it down.
5. Don't leave any picture tubes lying around.
6. If a kinescope is defective, it must be brought back to the ship for disposal.
7. The weakest parts of the kinescope are the neck of the tube and the rim of the viewing surface. These parts must not be struck, scratched or subjected to more than moderate pressure at any time.

INSTALLING THE KINESCOPE

3-4. In sets shipped with the kinescope packed separately, the mounting arrangements will naturally vary with different manufacturers. We will discuss here the proper steps in installing the kinescope in the typical receiver chosen for illustration purposes, the RCA 9T240. For other makes and models, the steps may vary somewhat, and the manufacturers' instructions should be studied for these variations.

1. Prepare the mount on the receiver chassis.
2. Insert the neck of the kinescope through the deflection yoke and focus coil.
3. Slip the ion trap magnet on the neck of the kinescope.
4. Rotate the tube to the proper position, determined by the high voltage connection.
5. Connect the high voltage lead and the kinescope socket.
6. Center the kinescope in the center of the cabinet opening.
7. *Clean the kinescope face and the safety glass.*
8. Replace the cabinet front panel and place the control knobs on control shafts.
9. Complete the mechanical positioning of the kinescope.

The neck of the kinescope must be inserted through the kinescope cushion, the deflection yoke and the focus coil, which are already in position on the receiver chassis. For shipping, these have all been tightened in place.

Inserting the Kinescope. – Allow plenty of room for the kinescope to be inserted in place by moving back both the kinescope cushion and the deflection yoke. Loosen the kinescope cushion adjustment wing screws and slide the cushion toward the rear of the chassis. Loosen the deflection yoke adjustment and slide the yoke toward the rear of the chassis and tighten it. See Fig. 3-6 for the location of these parts.

Next, from the front of the cabinet, look through the deflection yoke and check the alignment of the focus coil with the yoke. If the focus coil is not in line, loosen the two focus coil mounting screws and adjust the coil until alignment is obtained. Then tighten in this position. The opening must be clear, as shown here.

Fig. 3-9

The rim of the kinescope must rest on a prepared support. In many models, this consists of kinescope face centering slides, shown in Fig. 3-9. There are four such slides; two at the bottom on which the kinescope face rests, and two at the top to tighten and hold the kinescope firmly in place. Set the two lower slides at approximately mid position.

With the mount ready, insert the neck of the kinescope through the deflection yoke and the focus coil until the base of the tube sticks out approximately two inches beyond the focus coil. If the tube sticks, or fails to slip into place smoothly, find the cause of trouble and correct it. If you have already done a good job of aligning the deflection yoke and focus coil, there should be little trouble in slipping the tube into place. Incidentally, during this installation procedure, *be sure to hold one hand over the face of the tube to prevent it slipping out of the mount.*

The Ion Trap Magnet. – Now slip the ion trap magnet assembly over the neck of the kinescope, with the large magnet toward the base of the tube and with the arrow mark on the assembly up and pointing forward like this:

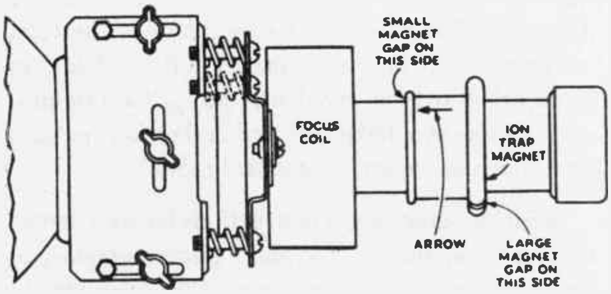

Fig. 3-10

The position for the magnet is on the narrow neck of the kinescope, about an inch from the tube base, over two small metal "flags" you can see through the glass envelope.

The front magnet is movable on the assembly. The correct position of the front magnet is with the gap on the side toward the high-voltage compartment. The gap of the large rear magnet should be on the opposite side and 180 degrees from the gap on the small magnet.

High-Voltage Connection. – Rotate the tube so that the high voltage contact, a recessed metal well in the side of the bulb, is up and turned about 30 degrees toward the high voltage compartment on the receiver chassis as in Fig. 3-11.

Insert the clip on the high voltage lead into the high voltage contact on the kinescope. The glass-to-metal seal of the connector on the kinescope is rather delicate and the connection should be made with care, using little pressure. If the clip does not slip easily into place, take a pair of pliers and bend the fingers of the clip together slightly to make an easier connection. But be sure that there is sufficient tension on the fingers for a good electrical connection.

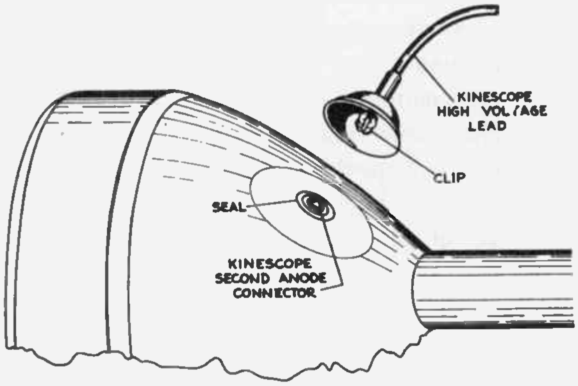

Fig. 3-11

Now connect the kinescope socket to the tube base and the tube is in position for adjustment.

High-Voltage Precautions. – The inner and outer conductive coatings of the tube's envelope form a condenser. When the power has been on, therefore, these coatings carry a charge. This charge can be sufficient to be dangerous even after the tube has been removed from the receiver for some time. *So before touching the anode connection on the tube, always discharge the tube itself with an insulated jumper wire from the high voltage terminal to the chassis.*

When the power has once been turned on, the high voltage filter condensers become charged and hold that charge for some time after the circuit is disconnected. Before handling the high voltage lead, make it a practice always to discharge the filter condenser by shorting the lead to the receiver chassis. Leave the lead in contact for several seconds. *Make this precaution a habit,* even when you know the power has not been turned on. Then you won't overlook it sometime when you *have* had the power on.

Centering Adjustment. – Center the kinescope so that the face of the tube is in the center of the cabinet opening. This is done in most models by adjusting the four centering slides that support the rim of the tube.

With the tube in place, before you replace the cabinet front panel, *make sure that the face of the kinescope and the front panel safety glass are clean.*

This is another time when you have to think of your customer. To the housewife cleanliness is next to godliness. Once you have installed the tube, she cannot reach behind the safety glass to remove any specks of dust or fingerprints that have been left inside. These can spoil the appearance of the television picture; but to the housewife, they are a particular cause of annoyance because she can't get at them. So, you'll be called back for a tube cleaning job.

It takes only a few minutes with a soft cloth moistened with "Windex" or a similar cleaning agent to do a thorough cleaning job on the face of the kinescope, and both the inside and outside of the safety glass. It is also a good idea to dust the inside of the cabinet and the chassis thoroughly, to be sure that you have not left dust inside that can get on the face of the tube.

You can then go ahead and install the cabinet front panel, and press the control knobs in place on the control shafts. With the front panel in place, the mechanical positioning of the kinescope can be completed.

Positioning the Kinescope. – You slip the kinescope as far forward as possible and slide the kinescope cushion firmly up against the flare of the tube. *Watch to see that the wire springs at both sides of the kinescope cushion makes a good contact with the coating on the outside of the kinescope.*

These springs ground the kinescope outside coating to the receiver chassis. If the contact is not properly made – for example, the springs might be loose or accidently bent back – then, when the tube is put in operation, static discharges or arcing will result. That, of course, means interference in the picture.

When the kinescope cushion and spring contacts are firmly in place, tighten the adjustment wing screws on the cushion support. Next slide the deflection yoke as far forward as possible, and tighten in place.

Then check the connection of the high voltage lead to the kinescope, plug the line cord into the power line and connect the antenna – and you are ready to turn on the power for electrical adjustments on the set.

A TYPICAL RECEIVER

3-5. A television receiver is a complex piece of equipment. It contains as many tubes and parts as three or four standard broadcast receivers. While many of the tubes and parts are similar to those used in a radio receiver, others are entirely different. The circuits of some parts of the television receiver are very similar to those found in a superheterodyne receiver, but other circuits, such as the synchronizing and deflection circuits, have no counterpart in standard radio.

Most manufacturer's instructions for each model receiver contain the complete circuit diagram of the receiver. This is information that you should study at your leisure, because you will need it later on. But for the present, stick to the receiver set-up procedure.

To set up the adjustments on a television receiver so that the customer can get the best possible picture, you must know the controls that should be checked and adjusted, where they are located, how the adjustments are to be made, and the order in which they are to be made.

The installation man has this advantage to start with. He knows that all receivers have been checked and adjusted at the factory and are in good working order before being shipped out. The adjustments that normally have to be made in the customer's home are those required for the proper operation of the picture tube, and those that may be necessary for the receiver to work best at the particular location.

Block Diagram of the Television Receiver. – In Lesson 2, we outlined the essential parts of the receiver and how each unit contributes to the reception. The typical receiver is made up of the circuit units shown in the block diagram of Fig. 3-12.

The Operating and Set-up Controls. – We are not presently concerned with the receiver circuits,

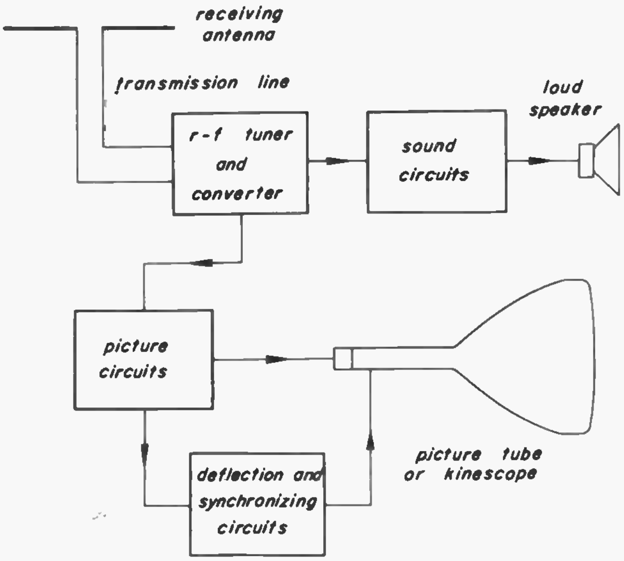

Fig. 3-12

and how and why they work. Right now, for the purpose of setting up a new receiver fresh from the factory, the important thing is to get the controls adjusted just right.

There are *two sets of controls* on the television receiver; (1) the operating controls, on the front panel where the customer can adjust them; and (2) set-up controls, on the receiver chassis, where the customer won't get at them, (we hope).

Obviously, the operating controls should be as few in number and as simple to operate as possible. If you could have only a push button to turn on the set and a selector switch or push buttons to pick the station you want to see and hear, that would be swell. But at the moment of writing, that is something for the future.

The set-up controls on the receiver chassis, once adjusted properly at the customer's home, should not require further adjustments. Unless some new trouble develops, such as tube aging, tube replacement, circuit failure and installation of new parts, you should not expect a call back for receiver adjustment. That is, provided no one not qualified to do so has disturbed the set-up controls.

The particular controls and their location will vary with different makes and models of television receiver; so you will have to study your manufacturer's instructions for that new model. For our typical receiver in this lesson, the 9T240, the controls and their locations are listed on the following page.

Location of the Operating Controls. – For most models of the T240 series the operating controls on the front panel of the receiver are in the positions shown below:

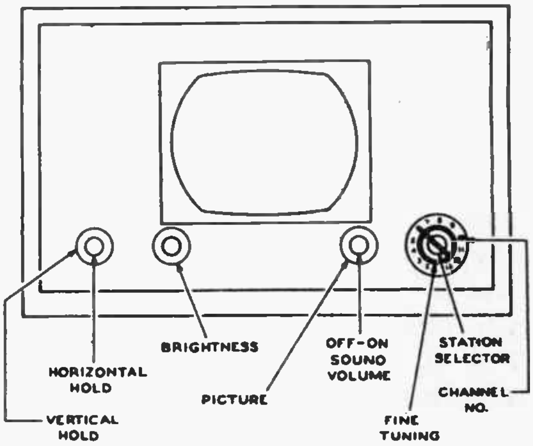

Fig. 3-13

Location of Set-up Controls. – Most of the set-up controls are located at the rear of the receiver chassis, where you can easily reach them to make adjustments. Others are located on top of the chassis, or on the under side of the chassis, or behind the station selector dial. Where each set-up control is to be found is shown in the following figures and text. For convenience, we have grouped the controls here according to their location. Our purpose here is to show what each control is like physically, where it is on the receiver, and what tool (if any) is needed to adjust it. The actual adjustment procedures are explained later in this lesson, starting with Sec. 3-6.

1. There are seven set-up controls located at the back of the chassis. Three of these – the *height, focus* and *vertical linearity* controls – are small knobs that are adjusted by hand. The *locking range* and *horizontal drive* controls are slotted screws that can be set with any small screwdriver. The *width* and the *horizontal linearity* controls must be reached through holes in the chassis. To set these, it is best to use an insulated tool. The screw slot on these controls

Operating and Set-up Controls of 9T240 Receiver

Part of Receiver	Operating Controls	Set-Up Controls	Location	Others
Picture Tube	BRIGHTNESS Control	Focus Control	Back of chassis	
		Focus coil adjustment and centering	Around kinescope neck	
		Ion trap magnet adjustment	Around kinescope neck	
		Deflection Coils adjustment	Around kinescope neck	
Picture Channel	PICTURE Control	AGC threshold control	Top of chassis	Alignment and trap adjustments (not included in set-up procedure.)
Deflection and Synchronizing Circuits	HORIZONTAL hold control	Horizontal Oscillator frequency	Under side of chassis	
	VERTICAL hold control	Horizontal locking range	Back of chassis	
		Horizontal Drive	Back of chassis	
		Horizontal Linearity	Back of chassis	
		Horizontal Centering (on some models)	Back of chassis	
		Vertical Centering (on some models)	Back of chassis	
		Width Control	Back of chassis	
		Height Control	Back of chassis	
		Vertical Linearity	Back of chassis	
		Horizontal Oscillator Waveform	Side of chassis	
Sound Channel	OFF-ON SOUND CONTROL			Controls for alignment of sound i-f and discriminator stages. (Not included in set-up procedure)
	TONE control (on some receivers)			
R-f Tuner	Channel Selector	Oscillator Frequency Adjustments	Behind Station Selector Dial	Alignment and trap adjustment (Not included in set-up procedure)

is most easily gripped by using the recessed end of a special insulated tool called a *neut stick.* The location of these controls are shown in the following diagram:

Also visible in Fig. 3-14, are the *focus coil* mounting screws and *centering adjustment* screws. These can be reached from the rear of the chassis or from the top of the set, when the cover is removed. They are Phillips-head screws and require the use of Phillips-head screwdrivers for adjustment. Use a long shaft Phillips-head screwdriver when adjusting from the rear of the chassis, and a short shaft screwdriver when making the adjustment from the top.

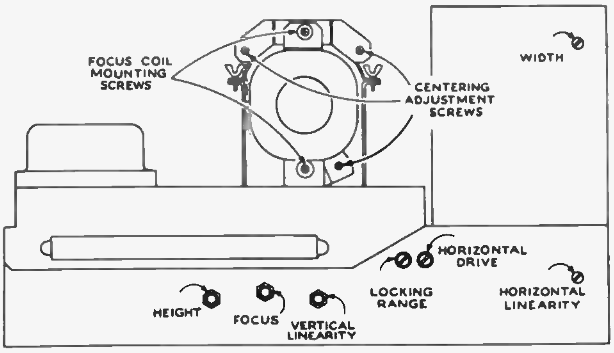

Rear Chassis Adjustments

Fig. 3-14

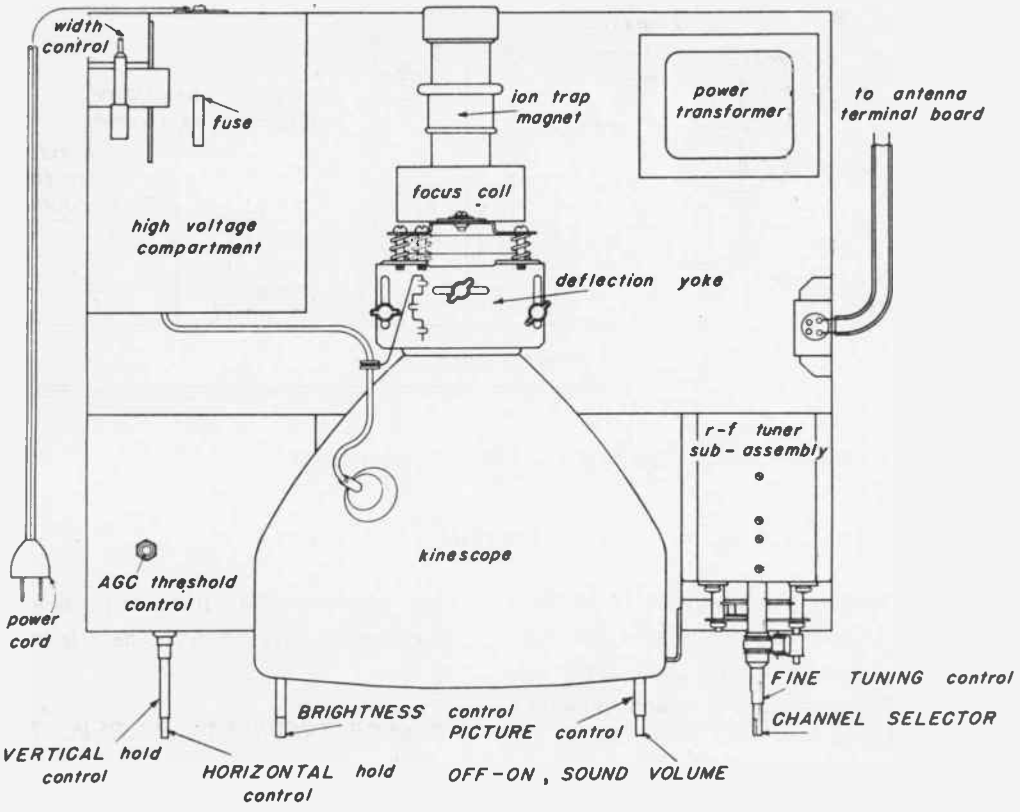

TOP VIEW OF CHASSIS

Fig. 3-15

2. The controls for adjusting the *deflection coil*, the *focus coil* and the *ion trap magnet* are most readily reached from the top of the chassis. On many models the *AGC threshold control* is also reached from the top of the chassis; although in later models it is expected that this control will be placed at the rear for better accessibility. Fig. 3-15 is a top view of the chassis showing the positions of these controls.

As previously mentioned, the focus coil adjustments are of the Phillips-head screw type. Adjustment of the ion trap magnet and the deflection coil is done by moving each unit by hand. The ion trap magnet fits on the neck of the kinescope and holds the position in which it is placed. The deflection yoke is held in position by tightening the wingnut adjustment by hand.

3. The *horizontal oscillator frequency adjustment*, which you must check and adjust, is located underneath the chassis. To reach it, you place the whole receiver on its side, with the high voltage compartment down, *without removing the chassis from the cabinet*. The removal of a metal panel at the bottom of the cabinet exposes the control. This is shown in Fig. 3-16 on the next page.

The horizontal oscillator frequency adjustment should be made with an insulated screwdriver (bakelite or nylon) or a neut stick.

4. *The r-f oscillator adjustments* for most channels are located just behind the STATION SELECTOR dial as shown in Fig. 3-17 on the following page.

The adjustments for channels 2 through 5 and 7 through 12 are available from the front of the cabinet by removing the STATION SELECTOR dial (or escutcheon). You do this by first removing the knobs from the shaft. This exposes the slide spring clip that holds the dial in place. Then slide the spring clip to the left to release the dial.

The adjustment for channel 13 is on top of the

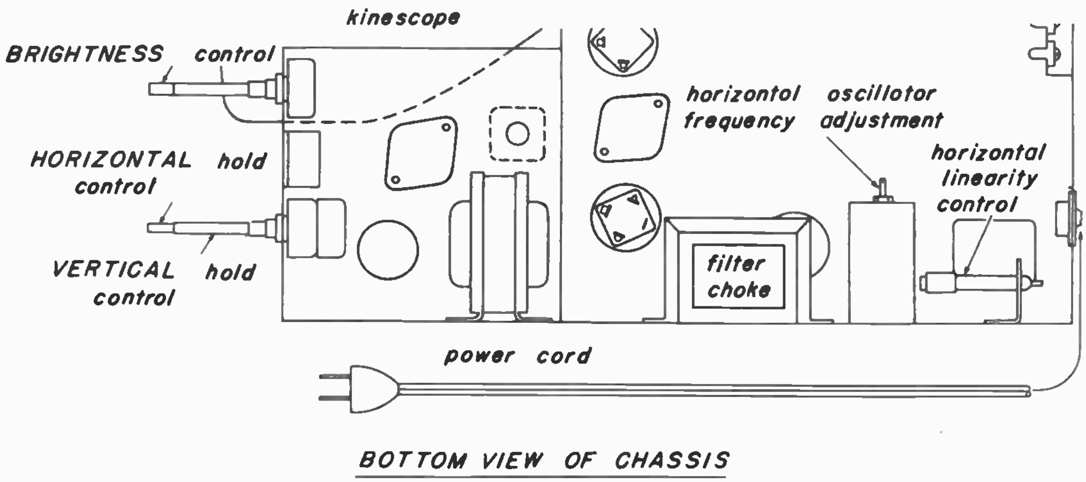

Fig. 3-16

chassis and the channel 6 adjustment is in the kinescope well. It is best to refer to your Service Data notes for the exact location, since there is some variation in different models – and *because there are other adjustments near them that must not be touched.*

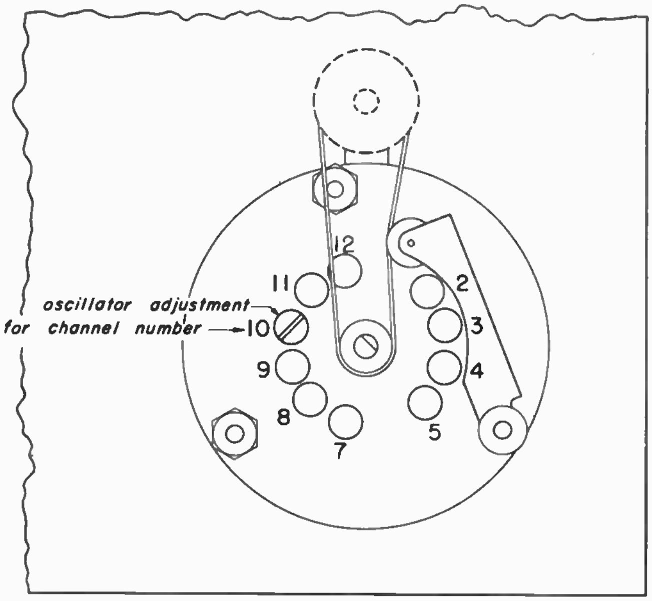

Fig. 3-17

The r-f oscillator adjustment should be made with a thin bakelite or nylon screw driver. You will probably find that your neut stick will not fit into the holes in the chassis that lead to these adjustments.

Become familiar with the various controls and their locations. We will refer to them in the set-up procedure described in the next lesson.

COMMON TROUBLES AND REMEDIES

3-6. If the world were full of perfect materials, processes and mechanisms, this section probably wouldn't be needed. In fact, a lot less technicians would be needed, and there would be a definite shortage of picturesque profanity. But since materials, processes and mechanisms are far from perfect, including human beings, it's necessary to know what to do when some imperfection shows up. All of which means that now and then you're going to encounter a set which just doesn't act right, even though it's a new one, right off the dealer's floor. There are many reasons why this can happen, such as rough handling, faulty inspection at the factory, a defective component, etc.

When it *does* happen, some of the troubles that arise will be of a kind you can't be expected to handle when you're out on an installation job. In such cases, where your tests show that there is something wrong with the set which you can't fix, call your office and get instructions, if you have not already been told what to do. You also then have a very delicate and important customer relations problem to handle, which will be covered thoroughly in Lesson 5. The best thing to do is explain that, while every receiver is carefully tested and inspected at the factory before being packed, sometimes one can be badly jarred or bumped in shipment, and thus arrive damaged, even though the carton is not broken. Naturally you're sorry it has had to happen to them, etc., but you're calling in to the office about it, and the whole thing will be taken care of as fast as possible. And of course, if you've got quite a lot of the actual installing job done, you put things away as neatly as you can, and generally go a little further in leaving the customer with a good impression. Remember, he was expecting to be looking at wrestlers or a ball game when you left, and he's bound to be a bit disappointed.

But unfortunately, even though you do run into some defective receivers, most of them will have troubles that you can take in your stride and cure right on the spot. Here's a list of the more common ones.

Picture, But No Sound. – Most of the time this is not even the result of a defect at all. It can result from not having the volume control turned up, which sounds silly, but can cause you trouble if you're sure it *is* turned up, when it isn't.

Probably the most common cause of this condition is mistuning with the fine tuning control, especially on the higher channels. It is quite possible to be tuned so far off that the sound carrier is completely out of the pass band of the receiver, and still have a fairly good picture. Of course the way to check and correct this is to swing the fine tuning over its entire range until the sound comes in at best quality. Busy housewives often unknowingly move the fine tuning control to one end of its travel when dusting, and then fail to readjust the fine tuning when the set is turned on again, particularly if they leave it switched to the same channel. It's part of your job so to instruct the set owner that some little thing like that doesn't result in a service call, so be sure that you not only keep this point in mind yourself, but make it clear to the owner as well.

Fig. 3-18

There's another easy way to get a picture without sound in several receiver models like the 9T240. That is to forget to plug in the loudspeaker after having it out of the set for some reason. In some receivers, you won't get any picture with the speaker plug out, either. This is because the field coil of the dynamic speaker used is also acting as part of the low voltage B plus filter, and with the plug out, no B plus can reach certain tubes in the set. In either case, the correction is pretty obvious. And when you are making your final check inside the set, be sure the speaker is plugged in securely so the cable can't work loose later and result in a preventable service call.

If a check reveals that none of these causes are responsible for the lack of sound, check the seating of all the tubes, giving them a *gentle* wiggle in their sockets. (We know Lesson 2 said *never* wiggle them. But if you don't try to force a tight tube, it's ok.) If this produces sounds in the speaker, you may be on the right track, as a poor contact with a tube base pin in the sound channel might be the defect you're looking for. Also, inspect all the tubes in the sound channel for open filaments. In the glass ones you can see the glow and feel the warmth with your hand, but in metal tubes you'll have to rely on the heat alone. If these tests show up no defect, carefully inspect the wire of the speaker leads and the speaker itself for broken voice coil leads, etc. If there is still no solution, the chances are you have a job for a service man on your hands, and of course, you should report it at once and ask for instructions.

Picture and Sound Do not Track. – This is almost invariably the result of a weak signal on the channel in question. If other channels show no such difficulty, this is pretty definitely what is wrong. The answer may be to reorient the antenna, move it to a different location where the signal from the weak station is stronger, or extend the mast higher. If all channels show the effect, you may either have a defective receiver, or something may be preventing the signals picked up by the antenna from reaching the input terminals of the set. Of course, it is also possible that you are in an area where all signals are very weak, but if this is the case, you probably found it out while locating and orienting the antenna. In any case, check carefully to see that you actually have good, solid connections from the receiver input through the transmission line to the antenna.

If the fault is still not located, try changing the r-f amplifier tube, and after that, the converter tube, being careful to seat each tube gently but firmly each time. A good rule to follow when making any sort of test is to change only one thing at a time, so you can be sure just what is defective when you have cured the trouble. When changing tubes, always replace the tube originally in the socket when you have definitely established that it is *not* the source of the trouble. In quite a few circuits in television receivers, the circuit may require realignment for optimum performance if a different tube is used, and this is no job to tackle while making an installation.

If the receiver seems normal on all other channels and nothing can be done to help matters on the weak channel, you have another delicate customer relations job on your hands. It is mostly a matter of explaining that in some areas, the signal strength from certain stations is simply not great enough to provide proper reception without special antenna systems. Incidentally, before you go into this with the set owner, you should have checked as well as you can to find out if other sets in the area have any trouble with the station in question. Don't rely on the customer's report of the remarks of his neighbor down the street who says he has a "perfect picture on every channel", for most of us are all too human, and tend to brag and exaggerate the performance of something new we have bought, if we are pleased with it. Don't suggest this to the set owner, of course. Just be courteous and listen politely, and try to get a chance to see for yourself how well the neighbor's set brings in the station. Chances are you will be able to see the neighbor's set in action, aided by your customer's desire to have everything perfect in *his* installation.

If the same trouble shows up, the explanation is obvious to your customer, and if it doesn't, check on the height, type, and orientation of the neighbor's antenna. Incidentally, don't be fooled because one house is further up a hill than another. See which antenna is actually higher, and make sure there isn't a billboard, a bridge, or some other structure shadowing your antenna. Almost always you'll find that you can either solve the problem or at least leave the customer with a satisfactory explanation of the trouble, if you try these methods, and others your own experience and ingenuity suggest to you.

Contrast Too High. – The effect of having the contrast control set too high is to compress the tone range of the picture, so that the white areas look chalky and washed out, and the dark areas go completely black, with no detail showing.

Fig. 3-19

The obvious remedy is to turn down the contrast control, at the same time readjusting the brightness control.

Brightness Too High. – If the contrast is about right but the brightness control is up too far, the whole screen will be too light, detail will be lost in the lighter areas, and there will be a tendency toward "bloom", in which the line structure of the raster becomes blurred and inde-

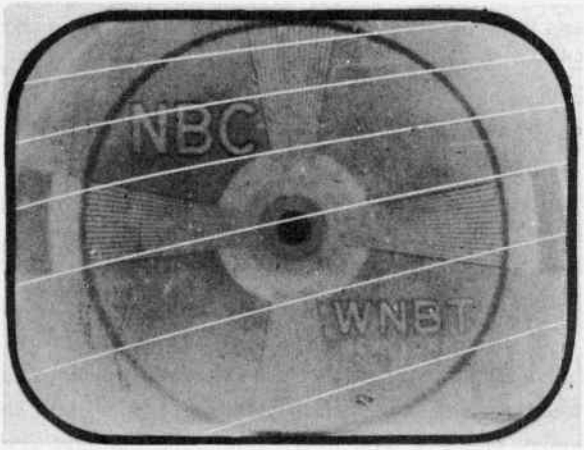

Fig. 3-20

finite, in spite of good focus adjustment. Again the obvious cure is to back down on the control, at the same time testing the contrast control for optimum adjustment. You must make clear to the set owner that both these controls affect the picture greatly, and one can seldom be readjusted without touching up the other. The owner's Instruction Book covers this, but you must not expect it to do the whole job, for there are many people who have great difficulty learning from books alone, no matter how good the book may be. (Are you having any trouble of this kind?) It's up to you to show the customer carefully how the two controls should be manipulated to get the optimum picture, and how the settings needed on different stations may vary slightly due to differences between transmitters and operators. And of course, you should get the customer actually to operate the controls a bit to get the feel of them and overcome any timidity he may feel toward them.

Hold Controls Set Wrong. – If the horizontal hold control is set wrong, the raster will be torn into parts, or held out of frame so the black bar at the right shows. This effect is illustrated in Fig. 3-21.

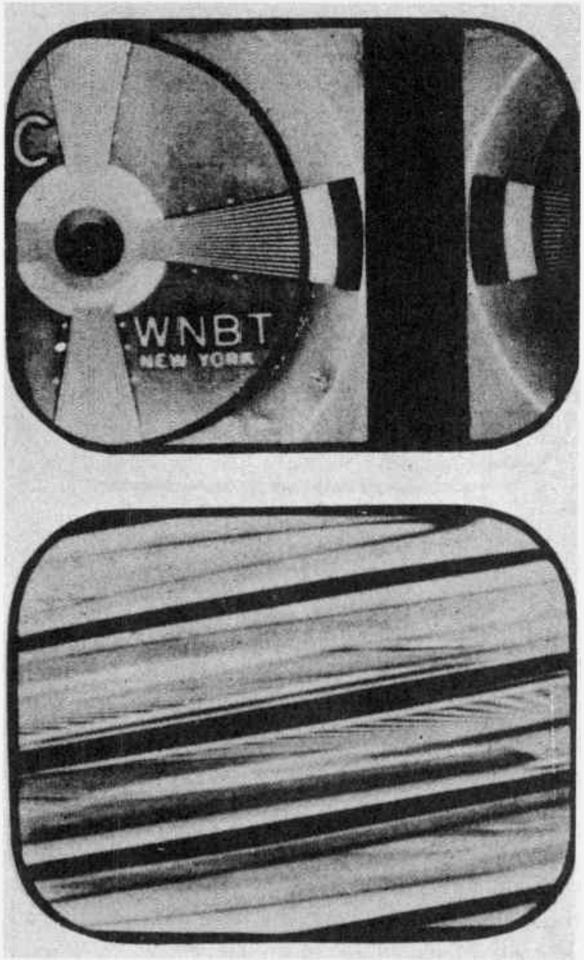

Fig. 3-21

If the vertical control is set wrong, the picture may move up or down out of frame, or it may even roost half-way in and half-way out, and stay there like a politician straddling some issue half-way through an election. Housewives seem to have an almost incredible knack of achieving this adjustment, so you must be very careful to explain that in setting the control it is not enough to just turn it until the picture quits moving, but that the control should be carefully advanced a little past the point where it locks into frame. Fig. 3-22 shows the picture out of sync vertically.

In either case, the answer lies in really getting the customer used to manipulating the controls, and being tactful and patient while you do it. Some fellows seem to get the idea that a customer is less intelligent than they are, simply because he is slow to catch on to the knack of setting the control properly. You, of course, won't make any such foolish and tactless mistake, because you know that anyone is likely to be timid and cautious when asked to tackle a new stunt under the critical eye of an expert. If you'd never before tuned a piano, and were asked to tackle the job before a master of that craft, you'd probably

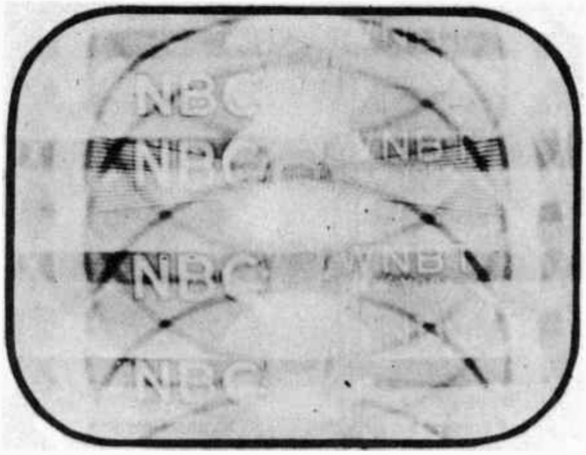

Fig. 3-22

have the same hesitation and lack of confidence. This is why it's part of your job to make the customer feel that he's just as capable of handling the controls as you are, once he's got the feel of them. Chances are he *is*.

Miscellaneous Troubles. – There are some other annoying little troubles that can happen out on the job that will cost you time and work if you overlook them. One of them is the TV-Phono switch used in many sets such as Model 9T240. The switch is located on the rear apron of the set, and cuts off television operation when set in the Phono position. If you can't get any picture, better check the position of this switch, if the set has one.

If you seem to have no power at all, make sure you have the set plugged in – and that the plug hasn't slipped out of the socket again. Lesson 4 has more details on difficulties with the electric power line.

If the set works, but all signals seem to have become suddenly weaker than they were when you were making your first checks, take a look to make sure that you haven't left the antenna disconnected while moving the set to work behind it, or something similar. It's quite possible to forget to replace a tube also, say the r-f amplifier, and of course that will affect reception seriously. In general, it pays to be methodical and systematic in your work, and to keep parts and tools well "picked up" as you go along, using the drop cloth as a sort of home base to which things get returned after use. The practice will pay off in improved efficiency, and lessened accidents and damage to the set owner's property.

Finally, there is one other point to be remembered in connection with the more elaborate receivers having a radio and phonograph. The Function switch on the front panel must be set in the correct position for the use desired.

◆

NOTES

NOTES

TELEVISION SERVICING COURSE

PREPARED BY

RCA INSTITUTES, INC.

A SERVICE OF RADIO CORPORATION OF AMERICA

HOME STUDY DEPARTMENT
350 West 4th St., New York 14, N. Y.

LESSON FOUR

RECEIVER INSTALLATION (PART 2)

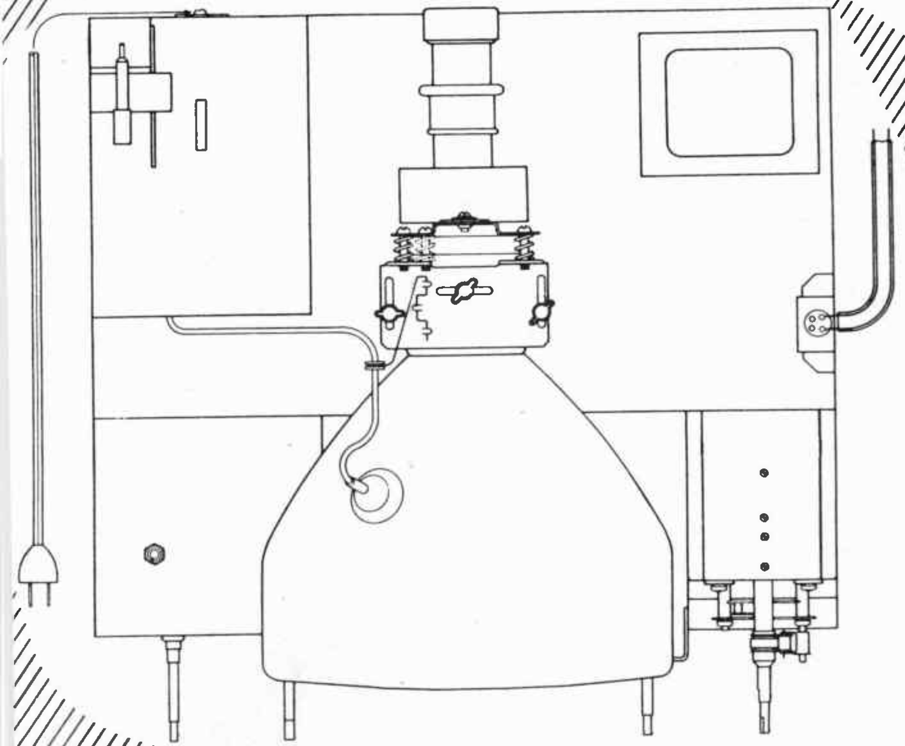

Lesson 4

INTRODUCTION

4-1. In the previous lesson, we discussed the preliminary steps in installing a television receiver. These involved such factors as locating the receiver and antenna, unpacking and assembling the receiver, and locating the various controls and adjustments. We also discussed some simple troubles and their remedies.

In this lesson, we are continuing our discussion of receiver installation with specific instructions for the model 9T240 as a typical receiver. We now know what the various controls and adjustments are and where they will usually be found. Our objective now is to actually see how these various adjustments are made to insure correct operation of the television receiver. In so doing, we shall cover the following specific points.

1. Adjustments of the picture tube assembly.
2. Adjustment of the so-called "set-up" controls. This has been divided into three sections: (a) Sync Adjustments, (b) Picture Quality Adjustments, (c) Tuning adjustments.
3. Difficulties with the electric power source.
4. Instructing the customer in the operation of the receiver.

Since we are going to begin our discussion with adjustments of the picture tube assembly, a photograph of this is shown in Fig. 4-1.

PICTURE TUBE ADJUSTMENTS

4-2. With the kinescope installed in its proper position on the receiver chassis, it is necessary to turn on the power before proceeding with picture tube adjustments. It is your job to determine the proper setting for the *ion trap magnet,* the *deflection yoke,* the *focus coil* and the *FOCUS control* to get the picture tube to operate just right.

Ion Trap Magnet Adjustment. – When you look down at the kinescope electron gun structure in the neck of the tube, you will see two small metal flags on the second cylinder from the base, thus:

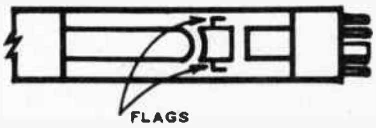

Fig. 4-2

With the kinescope positioned so that the metal flags are horizontal, the ion trap rear magnet poles should be approximately over the ion trap flags.

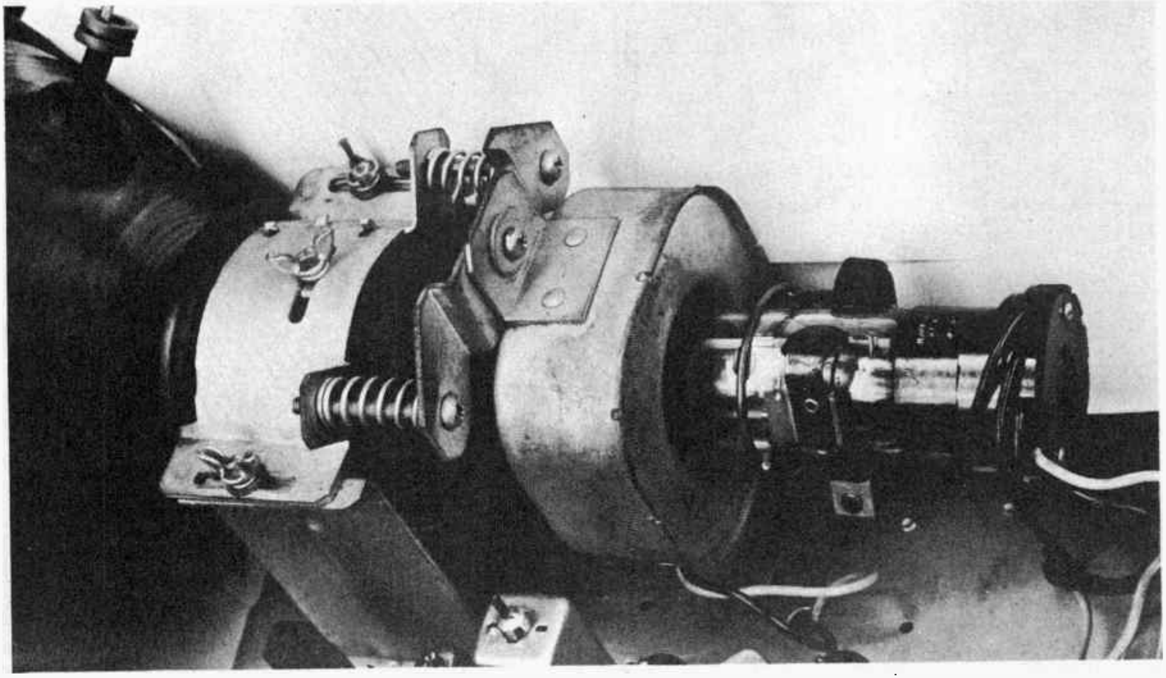

Fig. 4-1

You must adjust the ion trap magnet for the position that will give the brightest raster on the kinescope screen. Set the stage for this adjustment by turning the power switch "on", the BRIGHTNESS control fully clockwise, and the PICTURE control counterclockwise. Incidentally, check to see whether there is a TV-PH (Television-Phonograph) switch included on the chassis. If there is such a switch, it must be in the TV position; otherwise, the picture tube may not operate.

Now adjust the ion trap magnet by moving it forward or backward; at the same time rotating it slightly around the neck of the kinescope, until you reach the position that will give the brightest raster on the screen.

Do not keep the BRIGHTNESS control in the fully clockwise position for a longer period than necessary to make the adjustment. This might result in damage to the screen. Reduce the BRIGHTNESS control setting until the raster is slightly above average brilliance.

Focus Adjustments. —To obtain a sharp focus, so that the line structure of the raster on the kinescope screen is clearly visible, you must adjust both the focus coil and the FOCUS control, and readjust the ion trap magnet.

The focus coil should be concentric around the neck of the tube. For best overall focusing, it should be moved as far toward the rear of the receiver as the supports will permit. Mechanically center the coil by adjusting the coil mounting and centering screws indicated in Fig. 3-6 (Lesson 3).

This gives an approximate focusing adjustment. Fine adjustment of the electron beam is made by varying the current in the focus coil. You do this by setting the FOCUS control. This control is at the back of the chassis, as shown in Fig. 3-14 (Lesson 3).

The change in focus requires a readjustment of the ion trap magnet for maximum raster brilliance. Make the final touches on the adjustment of the ion trap magnet with the BRIGHTNESS control at the maximum position with which good line focus can be maintained. Fig. 4-3 shows the effect on the test pattern of misadjustment of the focus coil and ion trap magnet.

Fig. 4-3

Because of the inter-relationship between the action of the ion trap magnet and the focusing adjustments, whenever you change the setting of one you must recheck the setting of the other. Except during the initial setting of the ion trap magnet, keep the BRIGHTNESS control setting down to a level that is pleasing to the eye. If the brightness control is set too high the raster may bloom – that is expand in size and go out of focus. If this happens, the lines are not easily distinguished and this will make focusing adjustment difficult, or impossible to accomplish.

Adjusting the Deflection Yoke. – The deflection yoke must be adjusted if the lines of the raster (or edges of the test pattern) are not horizontal and squared with the picture mask. The picture frame should line up with the mask, like this:

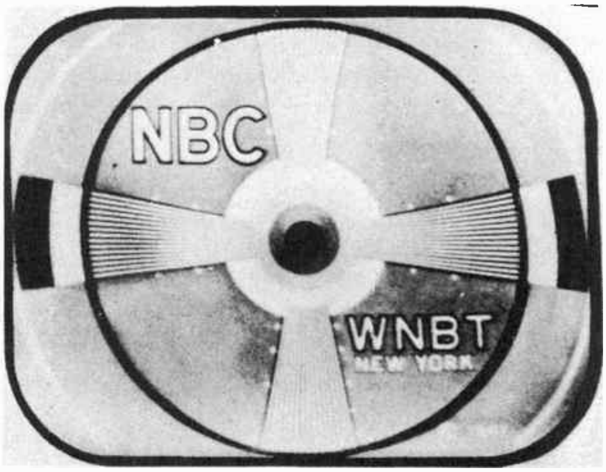

Fig. 4-4

Rotate the deflection yoke to that position in which the raster or picture is properly squared. In making this adjustment be sure to keep the deflection yoke as far forward as possible. Tighten the yoke adjustment wing screws to hold the yoke firmly in the position where the raster or picture is horizontal and properly squared.

With the picture tube operating properly, you are ready to check the picture quality to see what additional adjustments of the set-up controls on the receiver chassis you will have to make.

ADJUSTMENT OF SET-UP CONTROLS

4-3. For the picture tube adjustments described in the previous section, it is not necessary to tune in a television station. The receiver itself generates a raster on the kinescope screen, whose line structure is sufficient indication for the adjustment of the picture tube controls.

When you tune in a station, the lines traced out on the kinescope screen are modified by the video signals and the synchronizing pulses to form a televised picture. The quality of the picture depends upon the proper adjustment of the receiver operating and set-up controls.

The proper settings for the receiver operating controls on the front panel – the controls which the customer will use, and sometimes abuse – have been explained in Lesson 2. If the operating controls are to work properly, the set-up controls on the receiver chassis must first be properly adjusted.

These controls are checked and adjusted in the following order.

1. Check horizontal oscillator alignment.
2. If necessary, align the horizontal oscillator.
3. Check picture centering and, if necessary, adjust the focus coil and centering controls (if any).
4. Check the height and vertical linearity on the picture or test pattern and, if necessary, adjust the height and vertical linearity controls.
5. Check the width and horizontal linearity on the picture or test pattern and, if necessary, adjust the horizontal drive, the horizontal linearity and the width controls.
6. Check the focus and, if necessary, readjust the focus control.
7. Check and, if necessary, adjust the AGC threshold control.
8. Tune in all available stations to see if the receiver r-f oscillator is adjusted to the proper frequency on all channels.

In the following three sections, we have grouped the various set-up adjustments for convenience as follows: (1) Sync Adjustments, (2) Picture Quality Adjustments, and (3) Tuning Adjustments.

SYNC ADJUSTMENTS

4-4. When the receiver is put into operation, following the procedure given in Lesson 2, a picture or test pattern should be obtained from a station operating at the time. For test purposes it is best to pick a station that is showing a test pattern (if it is available at the time).

Conditions Affecting Sync. – If the horizontal oscillator and AGC systems are operating properly, it should be possible to sync the picture so that it holds steady on the screen. But, if the AGC threshold control is not adjusted properly and the receiver is delivering too much signal (overloading), you can have a condition in which it is impossible to get a steady picture.

Make sure that you first try all the normal operating adjustments to synchronize the picture. If that won't work you can reduce the receiver overloading by adjusting the AGC threshold control.

We mention receiver overloading as a possibility that could happen. If it does, it must be corrected before other adjustments can be properly made. However, remember that inability to sync the picture may be due to other causes than an incorrect setting of the AGC control. If the trouble is *overloading*, the AGC threshold adjustment will have to be made. But to be sure that the trouble is not something else, first recheck the operating controls and check the horizontal oscillator alignment. If at any time you can get the picture to synchronize, even for a brief period, the trouble may not be due to overloading.

The Horizontal Oscillator. – There is normally very little trouble with *vertical* sync, so no standard set-up adjustment is necessary. However, improper alignment of the *horizontal* oscillator at the time of installation is a frequent cause of service calls that could have been avoided. It would be fine if synchronizing circuits could be made so foolproof that no front panel controls would be needed. The next best thing is to reduce as far as possible the range in which misadjustment of the operating controls can take place, and to put the HORIZONTAL control on the front panel where the set owner *can* readjust it when and if it is necessary.

The horizontal oscillator is the circuit that generates the deflection signal which determines the rate of horizontal sweep. Its frequency must be locked exactly with the frequency of the horizontal sync pulses in the composite video signal. The closer the frequency, the easier this is to accomplish. In our typical receiver there are three adjustments affecting this: (1) *the horizontal frequency* adjustment; (2) the *horizontal locking range* adjustment, and (3) the *horizontal drive* adjustment. The process of making all three adjustments so that the oscillator pulses are synchronized, or lined up with, the sync pulses, is called *alignment* of the horizontal oscillator.

Checking the Horizontal Oscillator Alignment. – The horizontal oscillator alignment must be checked to see that the picture pulls into sync within the proper limits of rotation of the HORIZONTAL hold control. With present oscillator circuits the picture will remain synchronized while the HORIZONTAL hold control is rotated over the greater part of its range. This is the *locking range*, which is the horizontal oscillator's frequency range wherein the picture stays synchronized if the signal is not interrupted. But if for some reason the picture is disturbed and thrown out of synchronization, it will not be pulled back into sync until the control is adjusted within a much narrower range. This is called the *pull-in range*.

In order to see if the HORIZONTAL hold control operates properly, use the following procedure for checking the horizontal oscillator alignment:

1. Turn the HORIZONTAL hold control to the extreme counterclockwise position. The picture should remain in horizontal sync.
2. Momentarily remove the signal by switching off the channel being viewed and then switching back to the same channel. Normally this will throw the picture out of sync.
3. Slowly turn the HORIZONTAL hold control clockwise. This gradually reduces the number of diagonal black bars visible on the kinescope screen. The proper pull-in condition will vary somewhat for different receiver models. For the 9T240 receiver this condition is reached when only three bars sloping downward to the left are obtained, as in Fig. 4-5, below, and then the picture pulls into sync when you rotate the control just a bit farther clockwise.

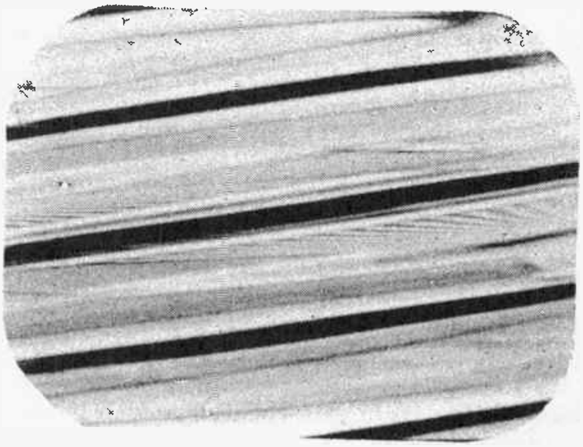

Fig. 4-5

4. Observe the position of the control where the picture pulls into sync. When the horizontal oscillator is properly aligned this pull-in point is approximately 90 degrees from the extreme counter-clockwise position.
5. Continue to rotate the control clockwise. The picture should remain in sync for approximately 90 degrees of additional clockwise rotation.
6. Continue rotating the control to the extreme clockwise position. At this extreme position the picture may go out of sync, and show one diagonal black bar sloping down toward the right or one vertical like this:

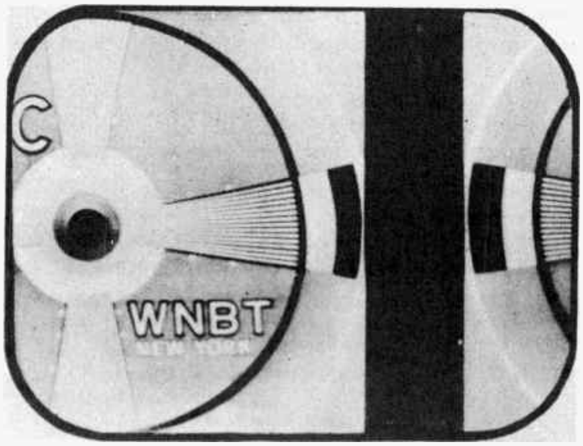

Fig. 4-6

These checks of the limits of stable sync operation, with a normal and steady picture within those limits, indicate that the horizontal oscillator is properly aligned. If the receiver fails to pass these tests, the horizontal oscillator must be adjusted.

Procedure for Adjusting the Horizontal Oscillator. – If there is trouble with the horizontal oscillator, there are three controls that you must check and adjust. These are the horizontal frequency adjustment, the horizontal locking range adjustment and the horizontal drive control. In this receiver, the horizontal oscillator frequency control is located under the chassis; but you can get at it through the bottom of the receiver cabinet, In other receivers this control may be found on top or at the rear of the chassis. The horizontal locking range and the horizontal drive controls are usually at the rear of the chassis.

1. *Horizontal Oscillator Frequency Adjustment.* – To reach this control turn the receiver on its side with the high voltage compartment down. Remove the metal panel and the control can be reached in the position shown in Fig. 3-16 (Lesson 3).

Now turn the HORIZONTAL hold control on the front panel to the *extreme clockwise position.* Tune in a television station. The extreme clockwise position of the HORIZONTAL hold control is an important control point for the horizontal oscillator adjustment. When the adjustment is correct, as explained in the previous section on "Checking the Horizontal Oscillator Alignment", the picture should be out of sync and should show a vertical or diagonal black bar. But a slight movement of the HORIZONTAL hold control counterclockwise should bring the picture into sync.

If the picture does not check that way, adjust the horizontal oscillator frequency adjustment and repeat the checking procedure until the picture checks normally.

The frequency of the horizontal oscillator may shift slightly as a result of the aging of the oscillator tube. The adjustment we have outlined is the best way of knowing that it is set right.

2. *Horizontal Locking Range Adjustment.* – In normal operation the picture should remain in sync as the HORIZONTAL hold control is rotated clockwise, all the way to the extreme position. But within 90 degrees of rotation at the counterclockwise end of the control the picture will normally go out of sync *when you remove the signal* by switching off channel and then back. This pull-in range is less than the locking range because it is more difficult to pull the horizontal oscillator into sync than it is too keep the oscillator synchronized once it has been locked in.

When the HORIZONTAL hold control does not sync the picture over a wide enough range, you can make the correct locking range adjustment as follows:

1. Set the HORIZONTAL hold control at the full counterclockwise position.
2. Momentarily remove the signal by switching off channel and then back.
3. Slowly turn the HORIZONTAL hold control clockwise and note the least number of diagonal bars obtained just before the picture pulls into sync.
4. If more than three bars are present just before the picture pulls into sync, adjust the horizontal locking range control slightly clockwise.
5. If less than three bars show, the adjustment of the horizontal locking range control is made in the opposite direction, counterclockwise.
6. Turn the HORIZONTAL hold control again counterclockwise, momentarily remove the signal and recheck the number of bars present at the pull-in point.
7. Repeat the adjustment until the correct condition of three bars present at the pull-in point is obtained.

The adjustment of the horizontal locking range control may affect the frequency of the horizontal oscillator. So you must *go back and recheck* the operation of the HORIZONTAL control at the extreme clockwise position and readjust the horizontal oscillator frequency control, under the chassis, if that is necessary.

If you have to change the setting of the horizontal oscillator frequency control, that in turn requires a recheck of the operation of the HORIZONTAL hold control at the counterclockwise end of its range. If the check at this end does not show correct operation, you have to readjust the horizontal locking range control.

With care, you should reach the correct adjustment within one or two checks at both ends of the HORIZONTAL hold control range.

3. *Other Adjustments that Affect the Horizontal Oscillator.* – Later in the set-up procedure you may adjust the setting of the horizontal drive control to get the proper picture width. Since this setting has some effect on the horizontal oscillator frequency, you must follow this with a recheck and readjustment of the horizontal oscillator.

In rare cases it may be impossible to obtain synchronization by the normal adjustments given above. As previously mentioned, the trouble could be in the AGC system. This adjustment will be explained later. However, the trouble could also be in the horizontal oscillator circuit.

Where such trouble is at all possible – and it very rarely happens in a new receiver – refer to your Service Data notes for the particular model of receiver concerned for special methods for horizontal oscillator frequency adjustment. Since such methods may require the use of a cathode ray oscilloscope, they will be studied later in the servicing section of this course.

PICTURE QUALITY ADJUSTMENTS

4-5. When the picture synchronizes properly you can go ahead with adjustments to improve picture quality. To judge whether the picture is the right height and width and whether it is distorted or out of focus in any part of the screen, it is best to tune in a test pattern.

This NBC test pattern is typical.

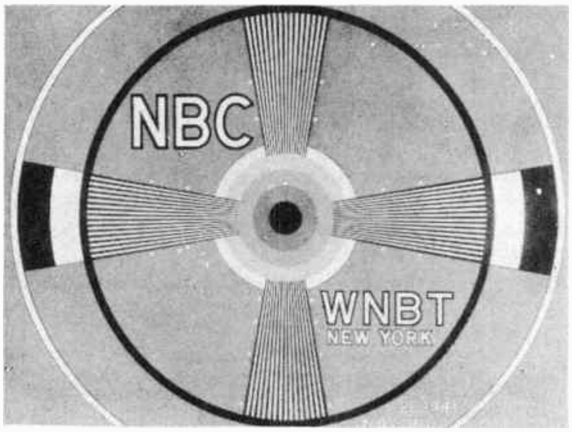

Fig. 4-7

The picture should be 3/4 as high as it is wide. Therefore, in the test pattern the inner circle has a diameter only 3/4 that of the outer circle. You must adjust the picture controls so that the outer circle just touches the sides of the frame, while the inner circle touches the top and bottom.

The converging lines enable you to judge how well the focus controls are set, and in what part of the picture there is distortion that must be corrected.

To improve the sharpness and general appearance of the picture, the following controls are checked and adjusted in the order given:

1. Centering adjustments.
2. Focus coil adjustments.
3. Recheck ion trap magnet.
4. Height and vertical linearity adjustments.
5. Width, drive and horizontal linearity adjustments.
6. Recheck alignment of the horizontal oscillator.
7. Adjust the focus control.

1. Centering Adjustment. – The picture may be off center as shown in Fig. 4-8.

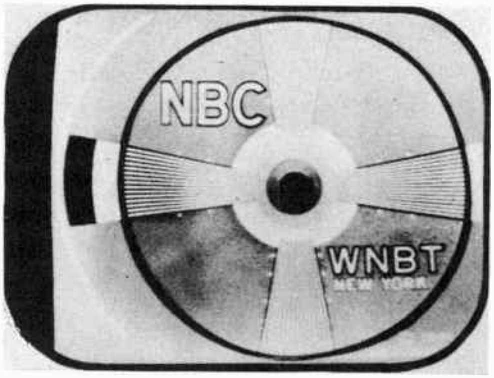

Fig. 4-8a Picture off center horizontally.

Fig. 4-8b Picture off center vertically.

Centering of the picture is obtained in some models by *mechanically positioning the focus coil* by means of the three centering adjustments screws shown in Fig. 3-14 (Lesson 3). Some models have electrical centering controls, located at the rear of the chassis, and others accomplish centering by means of a separate plate just forward of the focus magnet.

Center the picture on the screen by adjusting the three centering screws, or by whatever means are provided. If the focus coil has been properly positioned when the kinescope was installed, only minor adjustments will be needed now. It is important that the focus coil be concentric with the neck of the kinescope to prevent curvature of the picture; and as a general rule it should be placed as far toward the rear of the receiver as its supports permit, for best overall focusing results.

If a corner of the picture remains shadowed after the centering adjustments are made, the position of the focus coil will have to be changed.

Loosen the focus coil mounting screws and readjust the position of the coil to eliminate the shadow. Then recenter the picture.

As previously mentioned, every time you adjust the focusing coil you must also recheck and readjust the ion trap magnet for the position that gives maximum brilliance on the screen.

2. *Height and Vertical linearity Adjustments.* – Two adjustments control the height of the picture. These are the *height* and the *vertical linearity* adjustments, usually located on the rear of the chassis. Misadjustments of these controls show up in distorted patterns such as these:

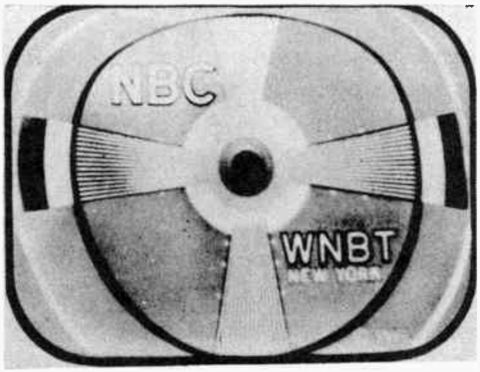

Fig. 4-9 a Vertical non-linearity.

Figure 4-9a shows the picture crowded at the top. The top and bottom are not symmetrical. This is a *non-linear* condition and must be corrected by adjusting the linearity control.

Figure 4-9b shows the picture stretched out vertically. The linearity appears to be alright. In this case it is the height of the picture that must be reduced. However, the linearity and height controls are so closely interlocking that a change in one requires a check and usually a readjustment of the other.

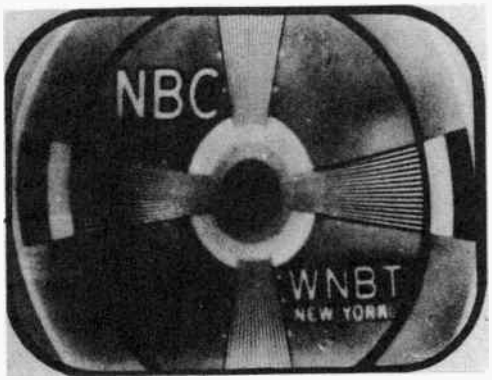

Fig. 4-9b Excessive height.

Watch out for any change in linearity when you change the height of the picture. You will have to readjust the linearity control if the top and bottom wedges don't look alike.

The procedure is:

1. Adjust the height control until the picture just fills the frame or mask vertically.
2. Adjust the vertical linearity control until the test pattern appears symmetrical from top to bottom.
3. Adjustment of either control will require a readjustment of the other.
4. You may also have to recenter the picture to align it with the frame over the kinescope screen.

3. *Width, Drive and Horizontal Linearity Adjustments.* – There are three controls that affect the width of the picture. They are the horizontal drive, horizontal linearity and width controls usually located at the rear or top of the chassis. See Fig. 3-14 (Lesson 3).

When you see distorted patterns that look like those in Fig. 4-10 they indicate improper adjustment of these controls.

Figure 4-10a shows the picture cramped in the middle. The horizontal linearity control may be adjusted to correct this.

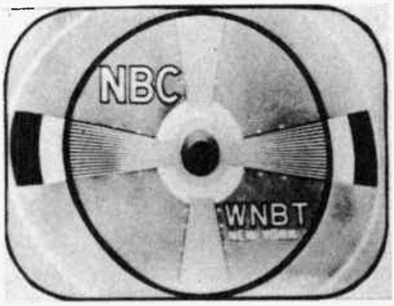

Fig. 4-10a

In Figure 4-10b the picture is too wide. The picture width must be reduced by adjusting the width control.

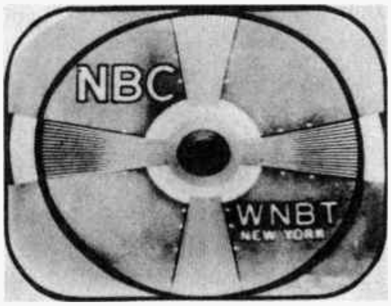

Fig. 4-10b

In Figure 4-10c the picture is non-linear, with the circles in the test pattern definitely egg shaped. This condition can be corrected by adjusting the horizontal drive control.

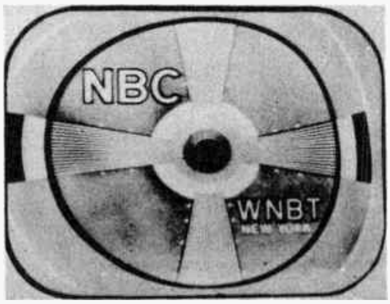

Fig. 4-10c

The best order to follow in adjusting the horizontal controls for picture quality follows:

1. Adjust the horizontal drive control to give a picture of maximum width within the limits of good linearity. Don't worry about the picture width at this point.
2. Adjust the horizontal linearity control to make both sides of the test pattern symmetrical, and provide the best overall linearity.
3. Adjust the width control until the picture just fills the frame or mask over the kinescope screen.

If you change the adjustment of the horizontal drive control, you must remember that this control also affects the horizontal oscillator alignment. So you have to go back and check the oscillator alignment as explained in Sec. 4-4 and make any slight readjustments you find to be necessary.

4. *Final Focus Adjustment.* – You can usually touch up the picture to give sharper definition, after picture quality controls have been adjusted to give the right height, width and linearity to the test pattern.

Adjust the focus control, at the rear of the chassis, to give the sharpest definition of the vertical wedges of the test pattern, and the best focus in the white areas of the pattern.

To make sure that the picture tube does not get out of adjustment due to handling of the receiver, *check to see that the kinescope cushion and deflection yoke adjustment screws and the focus coil mounting screws are tight.*

5. *AGC Threshold Control.* – The AGC threshold control adjustment determines the level at which the automatic gain control (AGC) system begins to operate.

The function of the AGC system is to reduce variations in the brightness and contrast of the picture due to variations in the signal strength at the antenna. It is thus associated directly with picture quality. In the 9T240 receiver, the AGC control is a potentiometer and is therefore continuously variable. In other receivers, this control may be a switch with several positions.

You must check the AGC operation and in some receiver locations you may find that an adjustment is needed. To check the setting of the AGC threshold control, tune in the strongest signal, sync the picture and then proceed as follows:

1. Turn the PICTURE control to the maximum clockwise position.
2. Turn the BRIGHTNESS control counterclockwise until the vertical retrace lines just disappear.
3. Momentarily remove the signal by switching off channel and then back.
4. *When the AGC threshold control is properly set the picture* reappears immediately following this test. But *if the picture takes longer than half a second to reappear, the control should be adjusted.*

If adjustment is required, check to see that the PICTURE control is at the maximum clockwise position.

5. Then turn the AGC threshold control in the direction that reduces the gain of the receiver. In some models this is fully counterclockwise. In this position the picture may remain O.K. or the top one-half inch of the picture may be bent slightly.
6. Now turn the control slowly clockwise until there is a very slight "bend" or change of bend in the top one-half inch of the picture like this:

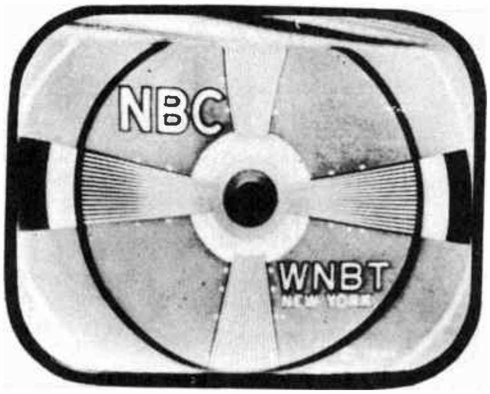

Fig. 4-11

7. Then turn the AGC threshold control counterclockwise just far enough to remove the bend or slight tearing in the picture. This is the proper setting of the control.

The AGC threshold control adjustment should be made on the strongest signal received, if you are to be sure that the receiver will not overload when a strong signal is received.

The method of adjustment outlined may not work in areas where the received signal is very weak, because it may be impossible to get the top of the picture to bend. In this case you make the adjustment by continuing to turn the AGC threshold control clockwise to increase gain until the snow in the picture becomes more pronounced. This snow is an indication of noise interference originating within the receiver. You back down the gain of the receiver by turning the AGC threshold control counterclockwise until you get the best obtainable signal to noise ratio in the picture.

After the AGC threshold control has been properly set, replace the cabinet top. Any metal on the cabinet top, for example the speaker, may affect the focus coil action in centering the picture. So, be sure to check and, if necessary, readjust the picture centering after the cabinet top has been replaced.

TUNING ADJUSTMENTS

4-6. Now, with the replacement of the cabinet back panel, the normal set-up adjustment of the receiver is almost completed. But there is one more routine test of the receiver you must make. You must *check to see whether all available stations can be tuned in properly.*

In the 9T240, if any station does not tune in properly within the middle third range of adjustment of the FINE TUNING control, that channel will have to be realigned.

Realignment that requires the use of test equipment is normally not done in the customer's home. In such a case the set must be taken back to the shop where all necessary equipment is available.

R-f Oscillator Adjustments. – If the FINE TUNING control does not bring in a station at a setting near the middle position of that control, the condition can be corrected by a slight adjustment of the r-f oscillator.

The procedure is:

1. Tune in all available stations and note the position of the FINE TUNING control at which the station comes in properly. The setting is made by listening to the sound for best sound quality. It may be possible to get sound at three different positions of the control. The middle position of the three is the correct tuning position. At the two extreme positions of the FINE TUNING control where it is possible to get sound you may also get sound bars in the picture.
2. Note those stations that do not come in within the middle third of the range of the FINE TUNING control. These are the channels that have to be adjusted.
3. Remove the knobs and the STATION SELECTOR dial to expose the r-f oscillator adjustments (See Fig. 3-17 (Lesson 3).
4. If more than one channel is to be adjusted, correct the higher frequency channel first.

Remember that a change in the adjustment of a higher frequency will affect the r-f oscillator adjustment of all lower channels.

Now let's take a close look at the r-f oscillator adjustments. Not all of the adjustments are located behind the STATION SELECTOR dial. In that position we find the adjustments for Channels 2 through 5 and Channels 7 through 12.

Note the numbered holes through which the r-f oscillator adjustments can be reached. A rotary plate attached to the STATION SELECTOR shaft closes all holes except that for the channel to which the STATION SELECTOR is set. This prevents you from touching any other adjustment than the right one for the station to which you are tuned.

The adjustment for Channel 13, the highest frequency of the high frequency television band, and the adjustment for Channel 6, the highest frequency of the low frequency band, are critical adjustments that affect the settings of all the other channels in their respective bands. These adjustments are on the r-f tuner assembly and are reached from the top of the receiver chassis.

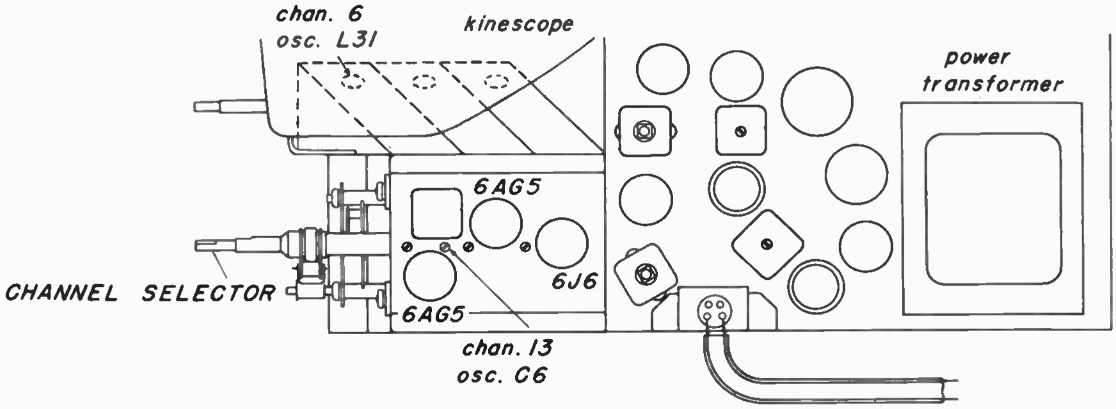

TOP VIEW OF CHASSIS

Fig. 4-12

A word of caution is in order here. DO NOT TOUCH ANY OTHER ALIGNMENT ADJUSTMENTS THAN THOSE SPECIFIED. While it is O.K. for you to make slight adjustments of the r-f oscillator controls, using only the station signal and the sound to check the setting, other r-f tuner adjustments require the use of special test equipment.

Let's assume, as an example, that our receiver is in the New York area and that Channels 13 and 5 are not properly aligned. Other channels come in at the correct setting of the FINE TUNING control. These are Channels 11, 9, 7, 4 and 2.

Now, to go ahead with the adjustment, proceed as follows:

1. Turn the STATION SELECTOR to Channel 13 and tune in the station by adjusting the FINE TUNING control for the best sound quality.
2. Check to see if the station tunes within the middle third of the range of the FINE TUNING control.

   With the STATION SELECTOR dial removed you can see that the FINE TUNING control shaft is coupled by a belt to a wheel which controls the FINE TUNING adjustment. At the factory a pencil mark is normally placed on this wheel to indicate the middle of the range of the control. This is shown in Fig. 4-13 on the next page.
3. Check to see whether the mark has been placed properly. If there is no mark, turn the control to both ends of its range and carefully note the middle position. Also mark off the middle third of the range.
4. If Channel 13 tunes within the middle third of the range of the FINE TUNING control, don't try to make the setting any better if all the other high-frequency stations are alright. Remember that any adjustment of the Channel 13 r-f oscillator will require readjustment of all the lower channels.
5. If Channel 13 needs alignment, carefully set the FINE TUNING control at the mid position. Then with the STATION SELECTOR at Channel 13 slowly adjust the Channel 13 r-f oscillator adjustment at the top of the r-f tuner assembly (Fig. 4-12) for best sound quality. Since the location of this adjustment has not been made foolproof, you will have to be particularly careful to pick the right adjustment screw and not to touch anything else. The setting of Channel 13 sets the basic adjustment for the high frequency band. The adjustments for the other high frequency channels can now be made through the appropriate holes indicated in Fig. 4-13.
6. Set the proper r-f oscillator adjustment for Channels 11, 9 and 7, doing the highest frequency channel first.

   In general it should be possible to get the correct adjustment within the range of the particular r-f oscillator control. But in case this cannot be done, for example with the Channel 7 adjustment, remember that higher frequency adjustments will affect Channel 7. A slight adjustment of the control for Channels 10, 9 and 8 might serve to bring the Channel 7 r-f oscillator control within a range in which it can be properly adjusted.
7. After adjusting Channel 7, go back and check the

tune-in points for the other high frequency channels on the air — Channels 13, 11 and 9. Readjust if necessary.

8. Proceed in a similar manner with the adjustment of the low frequency channels. The basic adjustment for these channels is the Channel 6 adjustment on the r-f assembly. In general the adjustments for the individual channels from Channel 5 down to Channel 2 can be made by the r-f oscillator adjustments indicated in Fig. 4-13. Do not change the Channel 6 adjustment unless Channel 5 can not be properly tuned without such a change.
9. On completing the adjustment for the lowest channel, Channel 2, go back and recheck the tune-in points on all channels that are on the air. All channels should come in properly with the FINE TUNING control set within the middle third of its range.

This procedure applies specifically to the 9T240 receiver. However, many receivers have a similar front end. Be sure to check the Service Data for each receiver you adjust, to make sure you do it properly.

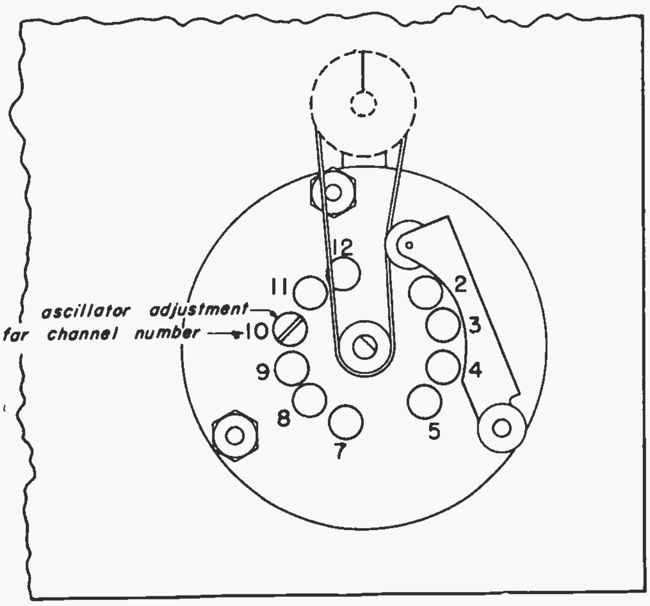

Fig. 4-13

ELECTRIC POWER DIFFICULTIES

4-7. We must have electric power of the proper frequency and voltage to operate standard television sets, and usually this is just a matter of putting the power cord plug into a convenient wall socket and throwing the power switch to "ON". However, this is a big country, and for various reasons the kind of electric current supplied to homes and business buildings is not the same in all parts of it. Since television sets may need to be installed in practically *any* part of the country before long, we'd better cover the principal kinds of electric power supplied, so that installation crews will be prepared to handle the problems presented.

Kinds of Current Encountered. – Here is a list of the types of electric current supply you are actually likely to find at wall sockets, when making television installations.

1. 120 volt, 60 cycle a-c.
2. 120 volt, 50 cycle a-c.
3. 120 volt, d-c.
4. 120 volt, 25 cycle a-c.
5. 230 volt, 60 cycle a-c.
6. 230 volt, 50 cycle a-c.
7. 230 volt, d-c.

There are probably a few small areas served by other non-standard electric systems, but for our present purpose we need only consider the first three listed in detail. In areas where a serious problem of non-standard electric supply exists, your shop manager will undoubtedly have full information about it, and will tell his installation crews where it exists in their district, and what to do about it.

Getting back to the first three types of supply current listed, we can note that the first kind, *120 volt, 60 cycle alternating current*, is by far the most common. It is so nearly universally used in fact, that this is regarded as the standard for home and office building electric supply. Accordingly, most radios and other electric appliances are designed to work on this sort of current, including the majority of television receivers. Of course, the design of television receivers and other appliances allows for reasonable variations in the supply current, say up to ten percent difference in voltage and perhaps four or five percent in frequency. This is done to allow for variations in the supply current at any point caused by such things as the changing load on the line at different times of the day, etc. The voltage particularly is likely to drop below that specified in the franchise of the power company, because of local conditions, and it is important that appliances be able to work satisfactorily even then.

So far, so good. Standard sets are built for 120 volt, 60 cycle a-c, as we have seen. Next, we find that some cities are at least partially supplied by electric lines carrying 120 volt, *50* cycle a-c to dwellings and business buildings. Most regular television sets meant for 60 cycle current will operate satisfactorily on 50 cycle supply, *except for the record changer.* The changers are turned by a motor dependent upon the power line frequency, so if we put a 60 cycle changer on 50 cycle power, it turns one sixth too slow. Dennis Day slides down to baritone, and Nelson Eddy disappears into the lower depths, among the bullfrogs.

Naturally this has been taken into account, and alternate sets are available for service in areas served by 50 cycle current, the only difference in their design being provision for normal operation from 50 cycle current. Incidentally, while most appliances meant for 60 cycle operation will function on 50 cycle supply, they may show a tendency to overheat, and in general it is better to check with the Underwriter's label on the device before you assume it is safe.

How to Identify D-c. – The next most likely variation of electric supply is 120 volt direct current, which is still quite widely used, particularly in the older parts of some large cities. Here there will definitely be bad trouble if you plug in a standard television set and switch it on. At the very least, a fuse will blow in the circuit concerned, and there is a fine chance of seriously damaging the television set's power transformer, or the ON-OFF switch. If you happen to plug in the set with the switch in the "ON" position, you may get a nasty hand burn, or an eye full of molten copper droplets. All of which means you should check with some person in the building who *knows* before you plug into a doubtful socket, or better still, check with a neon bulb.

This simple gadget is so useful it deserves a word of mention here. It consists of a small neon lamp with a suitable resistor in series. When hooked across a power line, the lamp will glow with a reddish brillance, the shade depending partly on the voltage across the lamp. On d-c, the glow is almost entirely confined to the electrode in the lamp which happens to be connected to the negative side of the power line, On a-c, *both* electrodes will glow equally. Incidentally, it doesn't matter which way you plug the lamp in, as both electrodes have similar characteristics. A suitable test lamp is sold by the General Cement Company as their Type 5100 Ne-o-lite test lamp, and other companies serving technicians and engineers offer similar devices. The General Cement lamp is mounted in a convenient holder, with the resistor already wired in place, and short test leads attached.

Getting back to the d-c supply problem it is obvious a standard set can't work from d-c supply, However, in many modern business and industrial buildings, both d-c and a-c supply is available. To prevent confusion, the wall outlets for both lines are usually marked for identification, or are equipped with different types of sockets. However, *don't just assume that this is so. Check first before you plug in.* The building superintendent can give you the right dope on which lines and outlets carry the a-c you want, or quite often the customer or a tenant can be of help. But don't guess, *find out.*

Another fairly common situation in large cities is to find adjacent buildings supplied with different kinds of electric power, perhaps one on d-c and the next on a-c, or even two neighboring buildings on a-c of different frequencies. This is particularly likely to turn up in districts where buildings are gradually being converted over from one system to another, and you'll just have to be on the alert to avoid trouble. There isn't any simple, handy gadget to tell you the difference between 50 and 60 cycle a-c, but you can check that it *is* a-c with your neon lamp, and if a record changer turntable turns at the right speed, it is 60 cycle, all right. And of course, you can usually find someone who knows definitely, anyhow, in case you have no other way to check.

Trouble From Defective Wiring. – You'd think that because of the danger of fire, everybody would be extra careful about all electric wiring in their homes or offices, but this just isn't the case. Quite often you'll find that on plugging the television set in, the plug just won't make contact in the socket, or it will be very loose and sloppy, making only a kind of intermittent, insecure contact. This usually results from bent or broken fingers inside the outlet box, or loose or broken wires, and it is not up to you to repair such defects. They are something of a fire hazard, and it's usually well to mention it to the customer, being careful to be diplomatic about it, of course. The main thing for you to do is find another outlet which can be reached with the set in the chosen location, or in a pinch, get an extension cord. Usually the customer will have one about the house somewhere, or in an office building the customer can secure one from the building superintendent, or otherwise. In any case, it is better not to leave the set operating from a really bad, insecure wall socket, because such an installation is almost certain to result in an unnecessary service call later, if not in something more serious.

Overloaded Electric Circuits.– Suppose, that on plugging in and turning on the television set, a fuse in the line blows out. This will be indicated by no power at the set, and usually by some lamps or other electric devices going off. Once in a great while this will happen on a line that is not overloaded, if the fuse happens to have been in service several years. But usually, it indicates that the circuit in question is already supplying all the current it is fused to carry. You can make a rough check on this by counting up the other devices that went off when the fuse blew out. If there is a refrigerator, several lamps, and perhaps milady's electric iron or a heater also on that circuit, chances are the line is overloaded. You must explain this carefully to the customer, and get at least a few of the loads moved to another circuit. An average television set will draw about as much current as three or four hundred watt lamps. This is only about one third as much current as the average electric heater or iron, so if a heater or iron can be moved to another circuit, your problem is solved. Of course, it may be possible to move the television set itself to another circuit (even small homes usually have two inside wire circuits), but this will depend on the desires of the customer. In a pinch, and if no other solution seems possible, it may be feasible to get the fuse replaced with one of five amperes greater current capacity. But don't *you* make the decision on that. Such a change usually must be authorized by the building superintendent or landlord in a rented building, otherwise you are responsible for any damage that may result from the change, such as a fire! You can get an idea of whether or not a larger fuse is practical by looking at the marking of the one that blew out. If it is a ten or fifteen ampere fuse, chances are good that it can be replaced safely with a twenty ampere one, but in any case, get permission. And its usually necessary to get it in writing, although your employer will be the person to ask about that. If the problem comes up, don't hesitate to consult your office by phone about it.

TESTING AND ADJUSTING ACCESSORY UNITS

4-8. Some of the television sets have AM-FM radio tuners and a record changer or changers in addition to the television receiver itself. These more elaborate units require some special care in setting up, which is described in the Service Data for each model. Since the number of such sets you handle will be small in proportion to the simpler ones, it isn't very practical to try to remember all the details of each. Instead, you should remember certain general instructions and cautions, and consult the Service Data carefully for details.

In unpacking such sets, remember they have many more parts that can be damaged in shipment, and as a consequence must be better protected from severe mechanical shocks and jars. For instance, those having radio receivers that swing out are sure to have special brackets or some other device to prevent this happening accidentally during shipment. Refer to the drawing of Fig. 4-14 as an illustration.

Various models will differ in the location of such shipping brackets and cardboard packing material, but the point to remember is that record changers, tone arms, radio tuners and such accessories do have packing material around them that must be removed before they can be operated. Check the unpacking instructions carefully before you attempt to operate any set with which you are not completely familiar.

These sets also have interconnecting cables between various units, which must be firmly plugged in to insure proper operation. It is quite

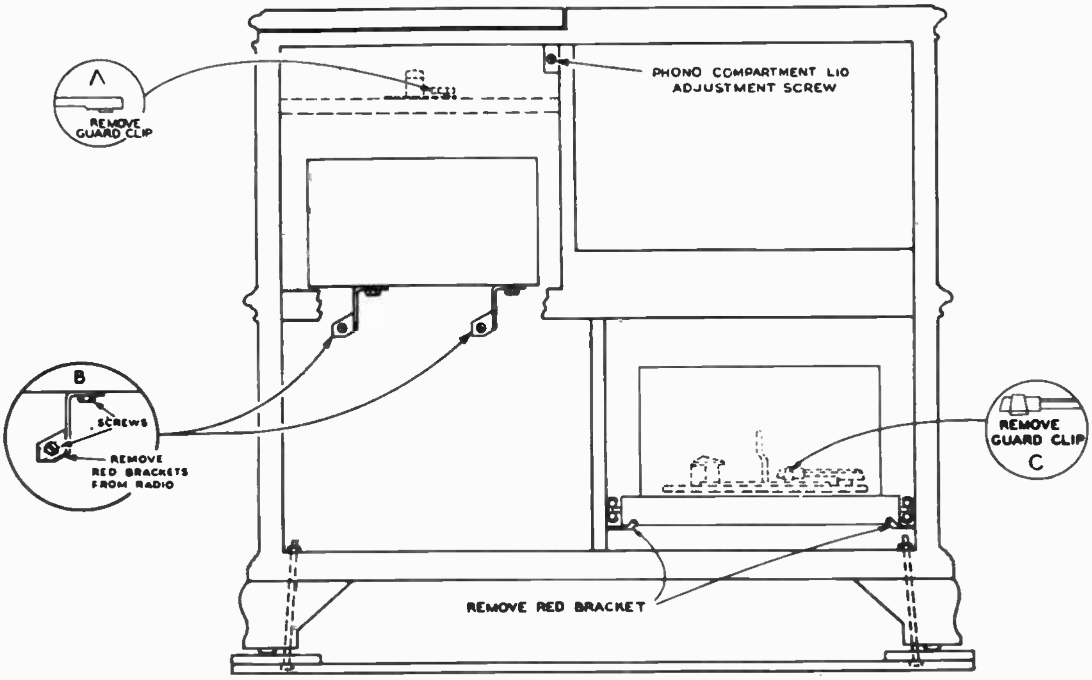

Fig. 4-14

possible for them to be loosened in shipment, so check them against the appropriate drawing in the Service Data to see that they are all properly connected. Fig. 4-15 showing the cabling will give you an idea of what to expect.

The same precautions about tube seating and damage apply to the radio tuners as to the television receiver chassis. Also, in certain sets that include radio tuners, the radio chassis is directly under the front panel which carries the kinescope mask. When this panel is removed for installation of the kine, the radio dial lights must be carefully removed from the bracket on the panel before it is taken clear out of the set. Don't forget to put them back when replacing the panel. The dial cord in AM-FM tuners must also be checked by tuning from end to end of the range to make sure it does not slip, and that stations come in at their proper place on the dial. If they do not, it will usually be because the pointer has slipped or been improperly set on the cord. With an AM station of known frequency tuned in accurately, you can reset the pointer so that it registers correctly. This adjustment is best done in the upper part of the scale between 1000 and 1500 kcs.

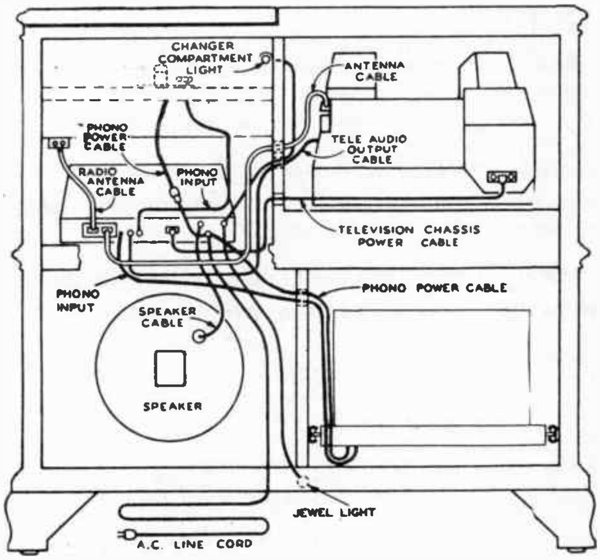

Fig. 4-15

TEACHING THE CUSTOMER TO OPERATE THE RECEIVER

4-9. With the completion of the set-up adjustments on the receiver and a final check of all stations on the air, your installation job is almost but not quite finished. You still have your customer to think of, to leave a good impression and to be sure that she knows how to operate the set.

Telling Isn't Teaching. – Before going into your final responsibility of teaching the customer to operate the receiver, let's get one thing straight. Just *telling* the customer how to operate the set is not *teaching* her. Neither is demonstrating.

You have operated a television receiver so often that you've probably forgotten that it's not as simple to a beginner as it is to you. A mere explanation of what each control does isn't enough – it's too easy for the customer to forget. She must actually turn the set on, tune it in, and manipulate the controls for best results until she has confidence in her ability to get good results after you have left.

A thorough job of teaching the customer involves the following steps:

1. Demonstrating the final result.
2. Explaining the steps involved, from turning power on to turning it off again.
3. Having the customer go through the procedure herself.
4. Showing the customer the Instruction booklet, and pointing out passages that will enable her to correct her own mistakes.
5. Repeating step 3 until she can get a good picture without help.
6. Explaining possible reception difficulties.
7. Checking other stations, and explaining any interference, etc., encountered.

Bear in mind that omission of any of these steps may result in a return service call.

Before you call the customer in for instruction, be sure you clean up thoroughly. You want to leave a perfect job, that not only works right but really shines. Brush up any shavings, stripped insulation or other dirt that resulted from the job. See that windows are closed and screens replaced, remove any empty cartons or packing material. And then, as a final gesture, take your polishing cloth and shine up the receiver cabinet.

Now you are ready to call the customer to look over your handiwork.

Demonstrating the Finished Job. – It is good psychology not to show a perfect picture right at the start. If the customer first sees a picture that looks perfect to her; and then in handling the controls the picture goes out of sync, she immediately thinks that you have done something wrong.

So before calling your customer for operating instructions, turn the HORIZONTAL hold control completely counterclockwise. Then you will be sure that when the set is turned on and a station tuned in, the picture will appear out of sync and will stay out of sync until you are ready to demonstrate the right way to correct it.

The customer will be so happy to get a good picture after seeing the mess the picture out of sync looks like, that she will be much more easily pleased with the set performance – and, in her eyes, you have proved yourself to be an expert.

Explaining the Operating Controls. – Go through the operating procedure step by step and explain why each step is taken.

1. Turn the OFF–ON SOUND volume control slightly clockwise to switch the receiver on. Then turn one-half turn clockwise to get the proper sound volume. Better remind the customer at this point to check whether the set has been plugged into the line, and to look to see if the set has a TV–PH switch and that the switch is in the TV position.
2. Now set the STATION SELECTOR to the station which showed up best in your tests. Music or speech should be heard in a few seconds, but you have already made certain that the picture will come in out of sync.
3. Set the FINE TUNING control for best sound quality. It is important at this point to explain the use of the FINE TUNING control to bring in a station at the correct frequency setting. The setting can be made much more accurately by listening to the sound than by watching the picture. It may be possible to get sound at three different positions of the control. The middle position of the three is the correct tuning position. At the two extreme positions of the FINE TUNING control where it is possible to get sound you may also have sound bars in the picture.
4. Turn the PICTURE control to approximately its mid-position. Explain that the setting of the PICTURE control determines the contrast between the light and dark parts of the picture.
5. Turn the BRIGHTNESS control fully counterclockwise to cut off the electron beam, and then slowly turn it clockwise until light with activity shows on the screen. Explain the action of the BRIGHTNESS control to set the maximum level for the light parts of the picture. It is important to keep the brightness down to a pleasing level. Too much brightness, if continued for too long a period, can damage the fluorescent coating of the picture screen.

6. Turn the VERTICAL hold control until the pattern on the screen stops moving up or down, or the moving horizontal dark bar disappears. Explain to the customer the operation of the VERTICAL and HORIZONTAL hold controls to synchronize the picture. Show that the picture can be thrown out of sync vertically, by turning the control either to the extreme counter-clockwise or extreme clockwise position and switching the station off channel and back again. Make her feel that there is no mystery about this loss of synchronization. She can easily stop the picture from moving vertically by moving the VERTICAL hold control to approximately its mid-position.
7. All this time the picture has been out of sync horizontally. Now turn the HORIZONTAL hold control clockwise to a position that will synchronize the picture. Show the customer that the picture can be thrown out of sync horizontally by turning the control either to the extreme counterclockwise or clockwise position and switching the station off channel and back again. Then show how easy it is to sync the picture by moving the HORIZONTAL hold control to approximately its mid-position. It is important to explain at this point that when a picture is first tuned in, it takes some time for the circuits to warm up. During the warm-up period of about 15 to 20 seconds you cannot expect the picture to remain steady. Also in switching from one station to another the picture may not immediately come into synchronization. Tell the customer that, in general, she should leave the VERTICAL and HORIZONTAL hold controls in their mid-positions. *But she must not be afraid to adjust them* to synchronize the picture.

By this time the customer feels that she knows just how to operate the receiver. Never let it go at that. Make *sure* that she knows how.

Let the Customer Take Over. – Shut off the receiver and change the positions of all the operating controls. Then ask her to go through the steps you have just shown. In most cases she will go right to it.

But in case she hesitates and shows fear of this new and complex gadget that has been set up in her home, you have to convince her right then and there that it is no more dangerous than a lamp or a vacuum cleaner.

Ask her to place her hand on the OFF–ON SOUND control and to turn on the set. Explain that this first control is no different from the switch on her radio. Just the fact of touching this strange gadget helps to overcome that initial fear of the unfamiliar. Then let her handle the controls, step by step. Don't criticize, but encourage her efforts. Give advice only to correct an improper adjustment.

Have the customer go through the procedure three or four times to be sure that she knows how to operate the controls. Before she starts her second or third trial run, turn over to her the copy of "Operating Instructions" that generally goes with the set. Show her where to find the controls that will correct common operation mistakes. so she will be able to correct her own errors if she forgets something after you leave.

◆

NOTES

NOTES

NOTES

TELEVISION SERVICING COURSE

PREPARED BY

RCA INSTITUTES, INC.
A SERVICE OF RADIO CORPORATION OF AMERICA

HOME STUDY DEPARTMENT
350 West 4th St., New York 14, N. Y.

LESSON FIVE

CUSTOMER RELATIONS

Lesson 5

WHAT THE CUSTOMER EXPECTS

5-1. "As Gabriel Heatter would say, 'There's good news tonight.' Having in despair written to you regarding trials and tribulations attending my purchase of a (Name) television receiver, I now make haste to let you be the first to hear of my satisfaction and renewed enthusiasm for television.

You may now close your files on the S_____ case with my assurance that the television we have viewed for the past week has been without a flaw and is a credit to the (Name) Company. There has been no interference or any other complication to complain of and the set is truly a joy now. I am grateful that your organization has such fine men as Mr. O______ and Mr. T____ who are not afraid to exert themselves just a little beyond the call of duty."

The above quotation is an excerpt from a letter from a satisfied customer. Let's compare it with a letter from a dissatisfied customer.

Gentlemen:

I am a thoroughly dissatisfied owner of a (Name) television set. For your information I am listing the causes which have changed my opinion.

1. The set was delivered with a broken cabinet leg.
2. The signals are weak and polluted by reflections.
3. Today I get only sound and no picture reception.

I am embarrassed because I insisted on the purchase against the wishes of my family.

Your truly,
Mr. E.B ______
New York

Of course, these troubles have been corrected. But a careful job of initial installation would have saved the customer much embarrassment, not counting the time lost in extra service needed to convert him again to a satisfied customer.

What Is Meant by "Customer Relations." – We pointed out in Lesson 2 that the prime objective of every receiver installation is the creation of a *satisfied customer,* and that it takes a lot more than a technically perfect installation to achieve this objective. We could define the subject of *Customer Relations* as the *sum total of all things we do or avoid doing in order to create good will* – that is, to keep customers friendly.

There are two distinct aspects of this problem. One is a company responsibility, and is concerned with such broad topics as company policy on service contracts, advertising and personnel. The other is the impression that you, personally, make on the individual customer. Actually, in your contact with the customer as an installation or service man, you carry *both* responsibilities. To the customer, *you are the Company,* and he looks to *you* to fulfill all that he expects of the company.

The Company's Responsibility. – The customer naturally expects the company to live up to all the terms that are included in the Service Contract and to carry out all of the provisions of its established installation and service policy. The customer expects you to know these things and to be able to answer any question about which he is in doubt. You have to know all the answers, if you are to understand all that has been promised to the customer and the limitations of these promises. Specifically, this includes such matters as:

1. The provisions of a typical Service Contract
2. Installation zones, – and the *standard* charge for each zone.
3. *Standard* and *special* installations
4. Indoor antenna installations
5. Surveys
6. Legal requirements
7. Fire Underwriters and Local Building Codes.

These matters ordinarily are covered in detail in the Service Contract. It should be studied carefully so that you will know what is permissible.

Particularly important to remember is that there are certain legal requirements that must be met in the installation of a television receiver. These legal restrictions may seem to make it harder for you to carry out the contract, and they will be discussed in Sec. 5-3. The basic requirement is that such installation shall not in any way damage the premises or the customer's property or become a safety hazard.

Your Responsibility. – Besides understanding all these provisions thoroughly so that you can explain them to the customer, it is very important that you personally make a good impression. The customer expects many things from you that are not stated in any contract. Promptness, courtesy, neatness and respect and care of his property are obvious – and there are lots of others.

To keep the customer happy and give him satisfactory service you have to think of and live up to the highest standards in such things as;

1. Your personal appearance
2. Your conduct in the customer's home
3. The neatness and assurance with which you carry out the installation job.

But with all of this, the customer may still find cause for complaint. The successful completion of your job can be judged only by the degree of continued satisfaction that the customer finds in the performance of his television receiver. You may not be able to please all of the customers, in every respect, all of the time. But you can go a long way toward that end when you do a good job in such essentials as: (1) instructing the customer in the operation of the set; (2) Giving courteous and clear answers to customer questions that seem to be foolish. Remember, they don't seem so foolish to the customer!

We will consider all of these items in detail in this lesson. But it must not stop here. Customer relations is so important in all our dealings that it must be kept in mind at all times. We will keep on referring to it, wherever it fits in, in all the remaining lessons in this course.

The installation of a television receiver is a very serious matter to your customers. To many it may be just that they want their money's worth

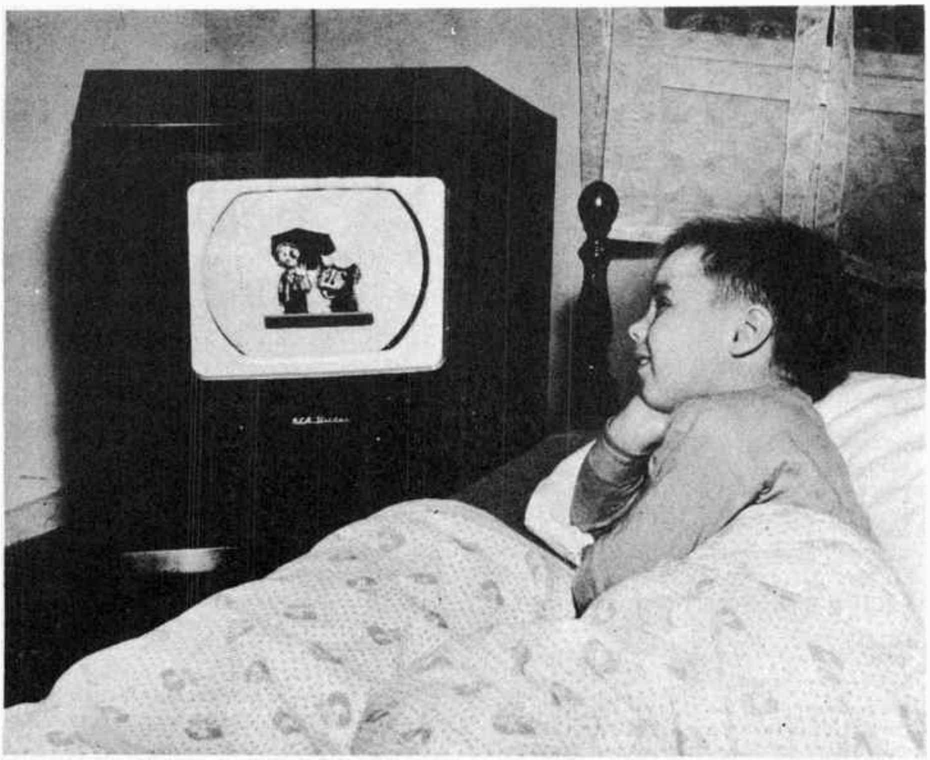

Fig. 5-1

in pleasure—they must not miss that World Series game. To others the important thing is to impress the neighbors – they just must have it for that Saturday night party.

But there are other reasons why a television installation can be important. The following letter makes one realize what it can mean to those who are shut in.

> Dear A_____
>
> I want you to know how deeply appreciative I am of the exceptionally fine job that was done by the installation group that put a television set in the home of Mr. J. G_____, one of our employees.
>
> Frankly when I spoke to you, I never dreamed that it would be possible to reach men whose day's work had perhaps been assigned maybe days or weeks in advance. However, an anxious daddy sometimes resorts to expecting the unexpected when the youngster is seriously ill. It was the senior G_____'s idea that doctors had done as much as they could, and possibly the thrill of a television set might be able to do more than the skill of a family physician. Believe me, you and the installation group did just that.
>
> Early this morning, actually before nine, there was a bouyant dad who popped his face into my office and said, "That did it. The kid's better."
>
> This means just one thing, the set was installed and ready for operation Saturday morning and your organization has a new junior booster.
>
> Please relay to everyone my appreciation of what was truly an emergency installation, and has made somebody a great booster for the service rendered by your company.
>
> Sincerely,
>
> W. D_____

The Factory Service Contract. – What is it that a customer expects when a television receiver is installed in his home?

Right on the face of the Contract are usually listed five essentials that you, and the entire organization backing you, must live up to. These items are:

1. Installation of a television antenna and all accessories necessary for reception from local television stations already in operation at the time of the installation, and within the normal service range. (It may not be possible to obtain satisfactory reception in all cases, however, because of abnormal conditions.
2. Installation and initial adjustment of the television receiver.
3. Instruction with respect to proper operation and care of the receiver.
4. Service and maintenance of the television receiver and antenna to which the contract relates, as required for normal usage for the period of the contract.
5. The services of television field technicians of the Service Company, who will perform or direct all work under the contract.

The installation technician is primarily concerned with Items 2 and 3. We have promised the customer the installation and initial adjustment for best reception, and instruction with respect to the proper operation of the receiver.

Of course the customer expects, and has a right to expect, a perfect technical job of installation. But there are those other things, some that seem to be little, that add up to make an impression on the customer. These things include such matters as courtesy and neatness in your conduct and work, care of the customer's property, and ability to answer pertinent questions regarding the Service Contract and the performance of the set.

It is a good idea to read carefully both sides of the Contract and become familiar with all that the customer has been promised – and also the limitations.

Typical items that are usually included in the Service Contract are:

1. **Antenna and Accessories:** This covers the type of antenna to be installed in accordance with standardized methods, National Board of Fire Underwriters codes, and applicable local ordinances. The contract holder is responsible for obtaining permission from the owner of the premises for the erection of the antenna. The antenna and accessories are in accordance with the requirements for a standard installation, to be defined later.
2. **Installation of Receiver:** The receiver must be set up, tested, adjusted, installed and placed in proper operation.
3. **Instruction of Contract Holder:** The contract holder must be instructed with respect to the proper operation and care of the receiver.
4. **Service Under Normal Use:** Service and maintenance of the television receiver is guaranteed for normal usage. This includes material, parts, and tubes, including the kinescope, which fail to give satisfactory service in *normal usage* during the contract period.
5. **New Television Stations:** In cases where it may be necessary to reorient, move, add or replace any part of the antenna system as a result of new stations coming on the air, or changes in transmitting conditions, such necessary work will be performed at the request of the contract holder, at the prevailing rate for materials and labor.
6. **Operation From Centralized Antenna System:** In the event the receiver is operated from a central antenna system, responsibility is assumed only for the receiver operation, not for the centralized antenna operation or its distribution system.
7. **Changes Made Necessary By the Federal Communications Commission Regulations:** In the event changes in transmission standards or band assignments are made by the federal government, any required circuit changes or component adjustments, if technically feasible, will be made at the request of the contract holder, at a reasonable charge for labor and material.

8. **Fire, Theft, Etc.:** No responsibility is assumed for loss or damage to the receiver caused by transportation, fire, water, windstorm, hail, lightning, earthquake, theft, negligence, riot or any other cause originating outside of the television receiver and antenna.
9. **Interference Effects:** No liability is assumed for the elimination of external interference created by passing automobiles or aircraft, electrical phenomina, appliances, diathermy, short-wave and FM receivers or transmitters or other external electrical disturbances. Where the effects of such electrical disturbances can be minimized by normal controls, efforts are made to give optimum results.
10. **Auxiliary Power Apparatus:** No liability is assumed in respect to installation, service and maintenance of motor-generators or other devices used for providing power to the receiver, or for interference effects resulting from such power supply.
11. **Relocation of Receiver:** Only the initial installation of the receiver is covered. In the event the receiver is to be moved or a change in the installation is requested, such change will be made at the prevailing rate for materials and service necessary.

INSTALLATION AND SERVICE POLICY

5-2. First of all you must know the installation and service policy *in regard to the things that can and cannot be done.* You never know when you will run into a situation in which this knowledge will be needed – not just to answer customer questions, but to save you unnecessary work and trouble.

The customer pays the bills and there are times when you may have to explain the charges. Let's see on what basis these charges are determined. This will enable you to have on hand all the information you will need to explain to the customer.

Basis of Charges. – In general you install and service television receivers wherever signals are strong enough to give relatively good performance. Besides being satisfactory to the customer, this performance must be such that it does not detract from the high standards set for reception.

Service Contract charges are determined by the type of set, and the zone in which the customer is located. These may be classified as zones A, B and C, according to distance from the transmitter.

Zone A. Installations. – Zone A is the area within 20 miles of most of the transmitters in that district. In the greater part of this area a good strong signal may reasonably be expected, so that a *standard* installation will work well. In this area there may be parts where intervening hills, obstructing buildings or other factors limit the reception. In such cases it may be necessary to use an extra tall mast, a special antenna or an extra length or type of lead-in. Such installations would be classified as *special* and a higher rate would be charged.

Zone B and C Installations. – Beyond zone A, the reception from television transmitters is usually less dependable, is more subject to interference and may vary with the weather conditions, season and the time of the day.

Television installations are made in: zone B, extending approximately 10 miles beyond zone A; and zone C, approximately 10 miles beyond the boundary of zone B.

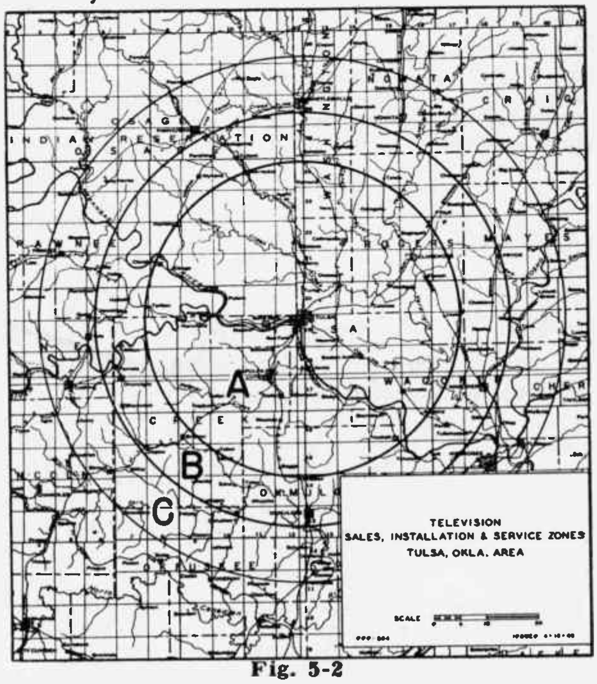

Fig. 5-2

Maps showing the boundaries of these zones may be prepared for each area in which transmitters are operating. Such a map for the Tulsa, Oklahoma area is shown in Fig. 5-2.

The basic Service Contract charges for installations in these outer zones are higher than those for zone A. These higher charges, however, do **not** include any provision for a *special* antenna **installation.** If it is determined that one is needed, the extra charge must be added to the basic Service Contract charge for that zone to arrive at the total charge.

A receiving location in one of these outer zones may not be equally favorable for all transmitters in the area, and in an extreme case the reception may be satisfactory only from the one which is the most favorably located. It is important that you explain this carefully to the customer so that no misunderstanding can result.

A preliminary survey should establish the kind of reception to be expected at the locality, and what kind of special installation, if any, is necessary to bring the reception up to an acceptable standard. The customer should be fully informed of any limitations in the reception to be expected, right at the start.

Standard Antenna Installations. – A standard antenna installation includes a single section mast of standard length (at present this is not more than 12 ft.), an antenna consisting of a dipole, or dipole with reflector, or folded dipole with reflector, a high frequency element, *(installed only where necessary,* for reception of established television transmitters within their normal service range), necessary mounting brackets, up to 100 feet of parallel wire transmission line, lightning arrestor, insulators and accessories.

Remember that the established rates for standard installations in the various zones *cover only one receiver.* Of course, it is assumed that a 110 volt a-c power outlet is available conveniently to the location of the receiver.

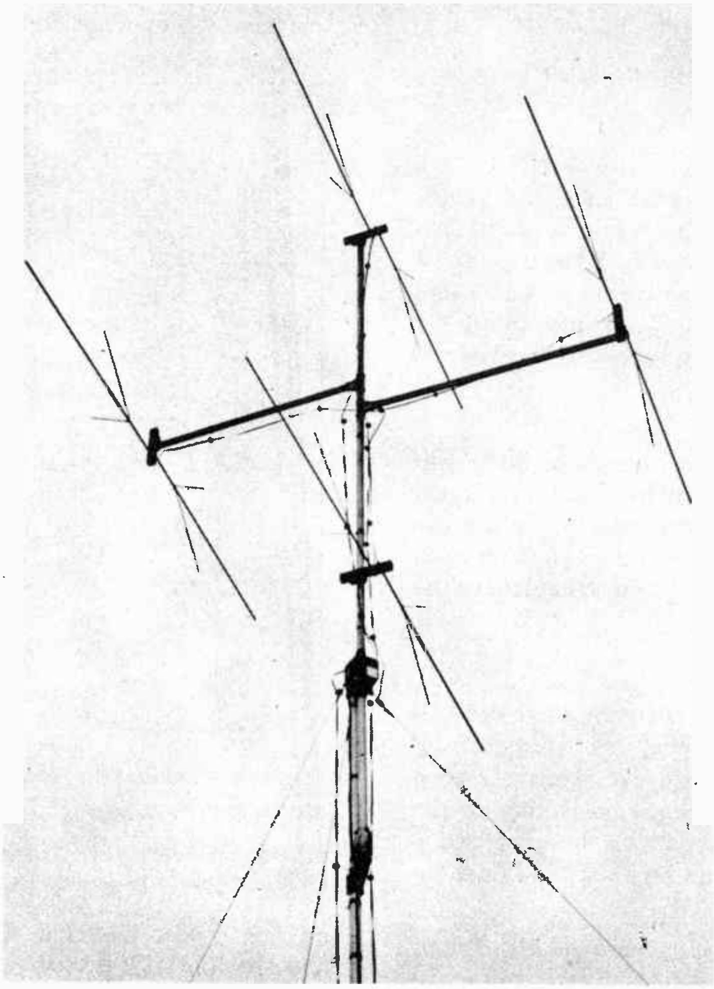

Fig. 5-3

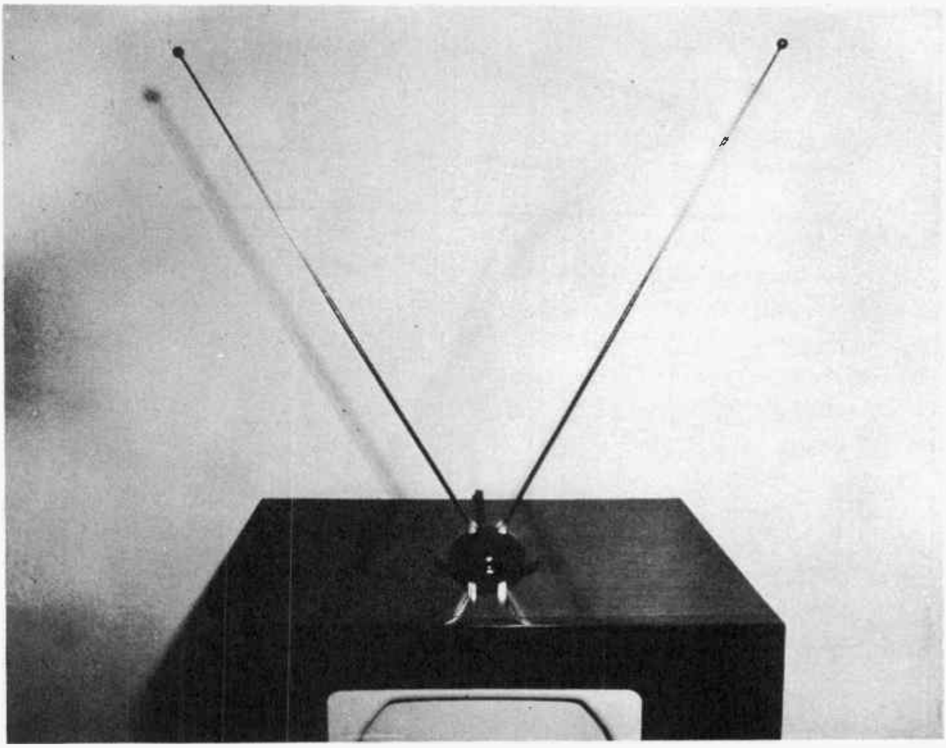

Fig. 5-4

Special Antenna Installation. – A special antenna installation, as shown in Fig. 5-3, is one or more of the following:

1. A mast taller than the standard (12 ft. at present).
2. A more complex antenna arrangement than the standard, such as:
    (a) One with an extra element or stacked array.
    (b) An extra antenna and mast.
3. A transmission line longer than 100 feet.
4. Elimination or reduction of interference radiations.
5. Special signal boosting amplifiers.
6. Modifications of building structure for supporting antenna or transmission lines.
7. Special building construction permits. (It is the customer's responsibility to obtain such a permit when it is required.)
8. Installation of more than one receiver at any one location.
9. Any other variation from a standard installation.

It is possible that a special installation may be required in some locations in zone A, although experience has shown that this is so in less than 10% of zone A installations. On the other hand, there are many locations outside of zone A, where a standard antenna installation will work well. Of course, the more distant receiver locations are more likely to require a special antenna installation, subject to a higher charge to the customer.

Indoor Antenna Installation. – When the customer cannot get the landlord's permission for the installation of an outside antenna it will be necessary to install an indoor antenna. In many sections in zone A an indoor antenna can be expected to work well, although it may not equal the performance of an outside antenna.

Where the indoor installation consists of a built-in antenna in the receiver or a regular indoor antenna that can be placed in the same room with the receiver and where no special problems are involved, the customer is entitled to a lower charge than for a standard installation. Fig. 5-4 shows an example of an indoor installation.

But, where the antenna is a dipole or folded dipole constructed from parallel wire line (excluding a built-in antenna) or a standard antenna installed indoors or outside a window with a transmission line connecting to the receiver, the installation can be considered as standard and charged for accordingly.

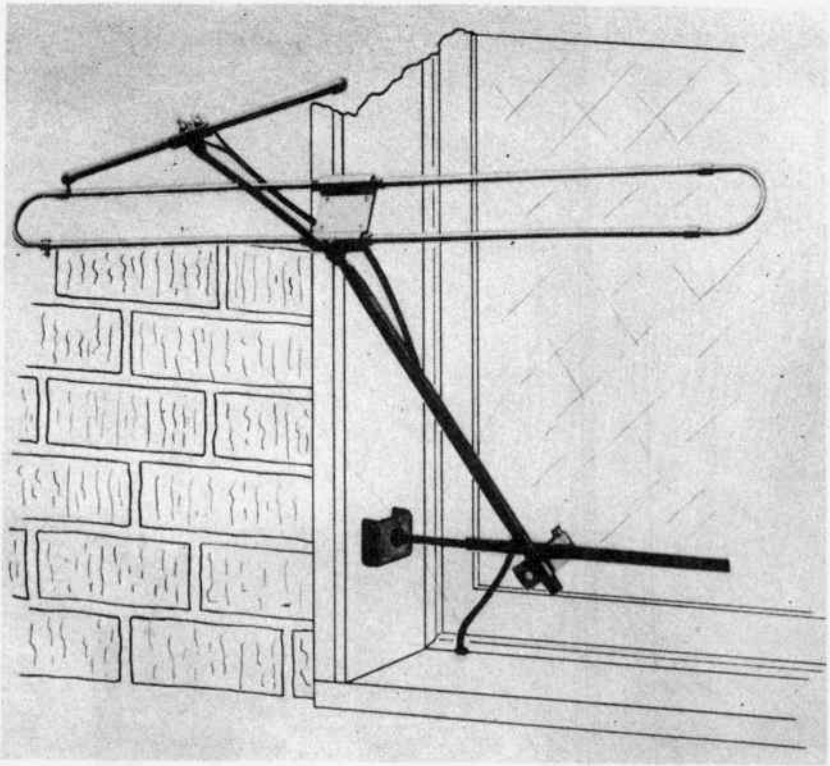

Fig. 5-5

Fig. 5-5 shows an example of a standard installation where the antenna is not on the roof.

It is possible that some indoor installations may be classed as special installations at a higher charge. Such cases are:

1. Where more than one receiver is installed at the location.
2. Where more than one antenna is installed with a switch to enable better reception from a number of stations.
3. Where a booster amplifier is installed.
4. Where any other special provision is made to eliminate interference or serious reflections.

These facts must be made clear to the customer at the time of installation. Otherwise extra effort is needed to clear up such customer comments as follows:

Dear Sirs:

Under the conditions of not being able to have a regular television aerial with a mast on the roof and using only a 300 ohm lead-in wire and folded dipole made of 300 ohm line, I believe my set has been operating very well and clear.

I believe that I am entitled to a refund because the regular aerial was not used.

Your truly,

Mr. K. L______

Surveys. – In general, good reception becomes more difficult as the distance between the transmitter and the receiver location increases.

In areas outside of zone A, where reception factors are unknown, it is advisable to have the location adequately surveyed before making a permanent installation. In such a situation the sale and installation is made contingent on the outcome of a test and demonstration for the customer at the location.

If the customer is satisfied with the reception, the survey cost may be absorbed by the service company, provided authorization is obtained from the dealer to proceed with a permanent installation immediately upon completion of a satisfactory demonstration. Otherwise there is a nominal survey charge.

General Policy Considerations. – Since the installation and service policy is subject to change and there are variations due to local conditions, it is important that you keep advised of the particular practices followed by your office.

That is the only way to know just what the customer is entitled to. Then you can do a good job of providing all that is required. Not only will you be able to answer all customer questions that are pertinent to the installation, but you will avoid unnecessary work due to misunderstandings.

If any question arises in regard to the installation, charges, etc., *refer them immediately* to the office, so that the matter can be straightened out *without delay.*

LEGAL REQUIREMENTS

5-3. Since the addition of any structure to a building may become a safety hazard if the job is not properly done, legal restrictions have been set up in many parts of the country, to insure the proper installation of television antennas and receivers. Even where no specific mention of television is made, the Local Building Code provisions dealing with structures and electrical installations must be observed. The basic legal requirement with which you are concerned is that the installation shall not in any way damage the premises or the customer's property or become a safety hazard.

You will stay out of trouble and keep your company out of hot water if you are very careful to live up to these requirements:

1. Permission of the owner of the premises is necessary for the installation of an outdoor antenna.
2. In a roof installation no damage to the roof should result.
3. All the requirements of Fire Underwriters Codes and local Building Codes must be met.

Owner's Permission for Outdoor Installation. – It is essential to obtain a written authorization from the owner of the premises before proceeding with an outdoor installation. It is the responsibility of the contract holder to obtain this authorization.

The authorization to be signed by the owner of the building, or his authorized agent, gives the Service Company permission to install a conventional television receiving antenna on the building, provided that the installation conforms with good engineering and mechanical practices, and complies with local fire and safety ordinances.

Without such a written authorization you should not proceed with an outdoor installation.

You would hardly think that such a simple requirement would be misunderstood, but here is a case that shouldn't happen – yet it did.

> Gentlemen:
>
> I had permission from my landlord to install an outdoor antenna, but I did not tell my wife. I thought all was settled, I did not know of any form.
>
> Your serviceman installed the antenna, but not the television set when my wife did not understand the form and would not sign same. They returned to the roof and removed the antenna.
>
> After considerable trouble another crew was sent and did a fine job. But they could not use the bolts placed in the wall in the original installation, since the bolts would not hold. These bolts are still there for your inspection.
>
> Very truly yours,
>
> Mr. B________

We will leave it as an exercise for you to figure out how many things were wrong in the above case.

Damage to the Roof. – A really serious problem that has been encountered, is customers' complaints of damage to the roof during installation. In most cases the roof was probably in bad shape before the installation was made.

Of course it is necessary to be careful in all work done on the roof. But all the care you may take on the job won't protect you from the customer's complaint, if the roof seal is broken and a leak develops.

Before attempting any work on the roof, in fact before actually setting foot on the roof, look to see in what shape it is. If the condition of the roof is not good, do not install an antenna on the roof if it is at all possible to put it elsewhere. If the owner insists on a roof installation have him sign a written release.

In most cases where the condition of the roof is doubtful, it is best to install the antenna somewhere else, preferably on the side of the house.

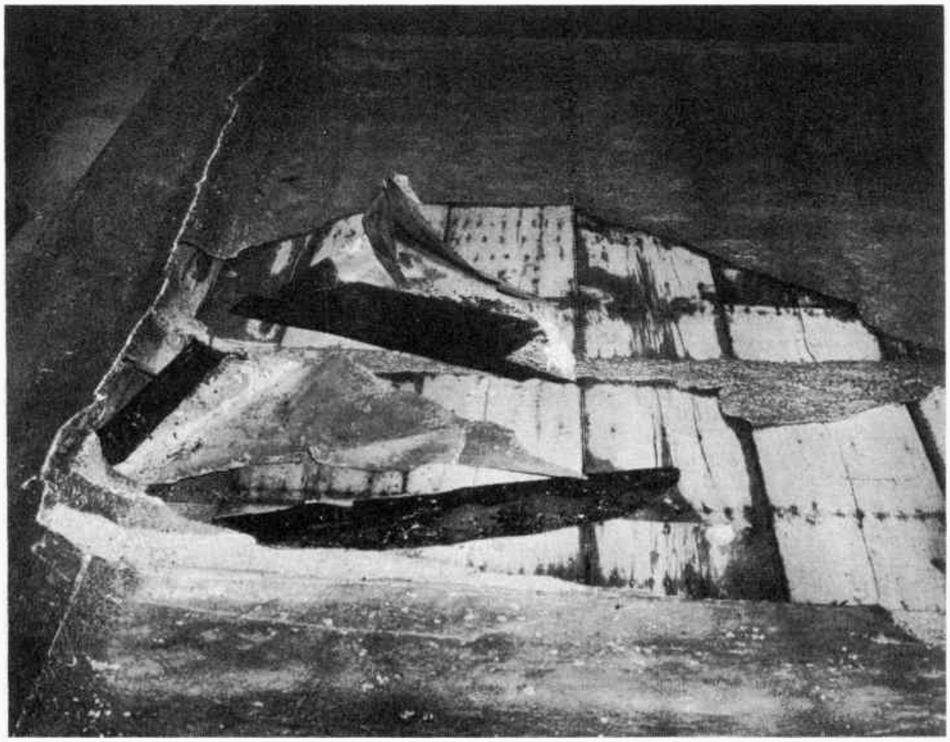

Fig. 5-6

In every case be sure to record on your job report the condition of the roof. This information will be helpful in subsequent service calls, or in case of customer complaints.

Here is an example of the sort of thing that can happen:

> Gentlemen:
>
> About a month ago your men installed an antenna on my roof and must have damaged the roof, because when it rained last night the roof leaked badly.
>
> The roof was new, having been repapered and tarred only about a year ago. Since your men were responsible, you should see that the roof is put back into good shape.
>
> Yours truly,
>
> Mrs. L. S________

Investigation of the above case showed that the leak had developed following a snow storm. After a foot or more of snow had been shovelled from the roof, it was found that the leak had developed at a spot about 20 feet from the antenna installation. The roof covering had been badly blistered and had been cracked by the weight of the snow.

If the installation crew had noted this condition in their job report the problem would have been simple. As it was, the job of proving to the customer that we were not responsible for the leak that occurred a month later was not an easy one.

It is entirely natural for a home owner to try to place the blame for roof damage on the last person he remembers to have been on the roof, even though that might have been months before the leak occured. This is sufficient reason for making a careful roof survey, and listing on the job report any condition that is below standard.

Roof damage can sometimes become quite involved, as in the following case. About a week after the installation of a television receiver at a swanky night club, there was a terrific rain storm. There was no visible sign of a leak, but all the tropical fish in the glass panels all around the walls were dead.

Investigation showed that a leak had developed on the roof about ten feet from the antenna installation. The water had seeped in between the outer wall and the wall of the night club and caused a short circuit in the wiring. This had stopped aeration equipment that kept the water fresh in the club's fish tanks.

Since the damage had occurred during the weekend, and was not discovered for some time, a great many expensive tropical fish could not cavort around to entertain the customers.

Of course, since the last persons on the roof were the television installation men, they were the ones to be blamed. And that case wasn't settled in a hurry!

Fire Underwriters and Local Building Codes. – These codes are designed as a protection against fire and as a means to insure public safety. They are particularly of importance in the installation of television antennas, since violation of these codes can invalidate the customer's fire insurance policy. If a fire or injury to some person can be traced to a condition resulting from a violation of the code in an antenna installation, you and your company could be held liable for the damage.

While there is some variation in local codes, most follow fairly closely Section 313 of the National Building Code Manual. This reads as follows:

RADIO MASTS AND POLES

"(A) No part of any radio equipment shall be erected in, on, or across any public street, avenue, road, highway, or other public space, and no wire in connection with, used or intended to be used for radio reception shall be, when erected or in the course of erection, either over or under or within 10 feet of any electric light or power line.

(B) No wire, mast, guy or support, for any wireless aerial shall be attached or strung over any fire escape or fire ladder, nor shall any radio antenna which crosses the roof of any building be at an elevation of less than 7 feet above said roof.

(C) No pole or mast, guy or support for any wireless aerial shall be placed in any soil stack, vent pipe, or other plumbing appurtenance. No pole or mast, on a roof of a building and exceeding 20 feet in height, shall be erected without approval of the inspector of buildings; a sketch showing the dimensions, and proposed method of securing such pole or mast shall be submitted."

Installations close to power lines may look safe enough. But in case of a storm, if either the power line or antenna is blown down, there is danger of contact with the high tension wire. In an installation in which the antenna elements are less than 7 feet above the roof, there is a hazard to firemen who may have to operate on the roof in an emergency – particularly at night, when the projecting elements are not easily seen.

These requirements and others relating to the use of lightning arrestors, grounding antenna masts and the minimum size of ground wires have been set up as safety measures. As such they must be lived up to.

Because of local conditions in some sections of the country the code may be modified in some respects. It is necessary, therefore, to check the local code in your district and live up to the requirements as specified there.

You must remember that even though the customer may request it, an installation that is counter to the Fire Underwriters and Building Codes should not be made. Where there is any doubt, the matter should be referred to your supervisor for checking with the Local Building Inspector.

CONDUCT IN THE CUSTOMER'S HOME

5-4. In previous lessons we have referred to the importance of the way in which you conduct yourself and your work in the customer's home. This makes quite an impression on the customer, as these letters show:

Dear Sir:

I have had much trouble receiving Channel #13 on my set, and several repair men had told me that the trouble was unavoidable. With this for an answer I had reconciled myself to poor reception until I was introduced to one of your servicemen, Mr. D_____.

I am almost embarrassed in saying that it was a rather difficult job to reach the antenna, but Mr. D____ took it all in his stride and reassured me in a most pleasant manner that it could all be adjusted.

With promptness and dispatch, with sureness and "know-how", this serviceman put right what had been abandoned by others.

I thank you for the wonderful service rendered your buying public and for your very good choice of intelligent service men.

A satisfied customer,

Mrs. H. D________

Gentlemen:

Last week I purchased a(Name) television set from a local dealer. The set was installed by two of your men, Mr. J______ and Mr. K______.

It gives me great pleasure to let you know that these two men were the finest trades-people ever to come into my house. First, they were gentlemen, just as polite and gentlemanly as they could be. Second, they both knew their business and lost no time in making a proper installation. And third, last and most important, they both seemed willing and pleased to answer a lot of foolish questions I fired at them, while showing me how to properly operate my set.

I had begun to think that people of their ilk were fast becoming extinct, but they renewed my waning faith in mankind. I believe that in an organization of your kind they will go far.

Very truly yours,

Mr. B. M______

The last letter illustrates an important way in which good will is created, one not readily recognized by most of us. When a customer asks a question, however simple it may appear, it is not a "foolish" question – it is just something that the customer does not understand and wants to have cleared up.

Whether you are doing the job for one of the "four hundred," or for an average citizen like you and me, courtesy and consideration are important and appreciated.

The above letters are examples of jobs well done. Now contrast them with a case in which the customer was definitely not pleased:

Gentlemen:

After much consideration I am remitting my check for renewal of my Service Contract. However, I feel that your service can and should be improved.

On two occasions when I called for antenna adjustment to improve reception on the higher channels, the service man did not even bother to go up on the roof, saying that we had the best possible reception that we could expect.

I hope that the second year of relationship with your company will be more pleasant.

Very truly yours,

Mr. S. J ________

Of course, there are cases in which the customer is somewhat unreasonable. But a little extra courtesy and a little extra effort can bring the customer around to a better understanding and a better appreciation of the job that you do.

A particular case in point is illustrated in this letter:

Dear Mr. O______:

Since writing my last letter to you, I have been reconverted from a dissatisfied television set owner to a well satisfied owner.

Mr. W______ handled the complaint in a completely satisfactory and competent manner and the re-installation conforms to what I had been led to believe an installation should be.

I must admit that I deliberately tried to put Mr. W______ on a tough spot when he was at my residence; but he called my hand in a very courteous manner and in my honest opinion did a very excellent job in every respect. It was a pleasure to make his acquaintance.

Please accept my thanks for the prompt attention to my complaint, and you can be assured that you have changed my mind about your service. I am well pleased with the entire transaction.

Very truly yours,

A. Q ________

Things to Remember in the Customer's Home. – When you approach the customer's home as a representative of your service company, you carry with you the prestige of the organization – in fact, to the customer *you are the company.*

To live up to that prestige, there are a few simple rules to remember. Actually, they all add up to just one basic rule. Ask yourself the question:

"Is this the courteous and the proper thing to do?"

Then, whenever you are in doubt, take the time to think it over to see if there isn't a better or more courteous way to do the job or to handle the situation.

Specific rules to remember are:

1. Before starting on the job, check your personal appearance. A clean shave, clean clothes, a neat hair comb, clean hands and finger nails not only make you feel at your best, but it makes a good initial impression with the customer. It is a real help in starting the day right.

2. If no one answers your first ring or knock, try several times at one minute intervals to make sure that no one is home before leaving a "Not at Home Card".

3. When first greeting the customer establish your identity by showing your identification card or badge. Do this without waiting for the customer to ask you.

4. Never enter the home unless accompanied by some member of the customer's family. This applies even when the customer has left the key with a neighbor with specific instructions to

admit you. You must be firm, in such cases, and leave your "Not at Home Card" instead.

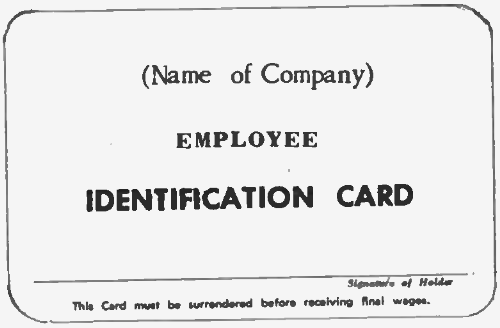

(Name of Company)

EMPLOYEE

IDENTIFICATION CARD

Signature of Holder

This Card must be surrendered before receiving final wages.

Fig. 5-7

Fig. 5-8

5. Watch your manners when entering the customer's home. Leave rubbers, raincoats, etc. outside. Be careful not to track any mud into the home.

6. Confer with the customer on the location of the set and the antenna. If possible try to satisfy the personal preference as expressed by the customer, as long as that is not detrimental to the performance of the set and does not violate safety regulations.

7. Inspect the set carefully before starting any work. Watch for any damage to the cabinet. If any repair is b yond your facilities, call the office for instructions.

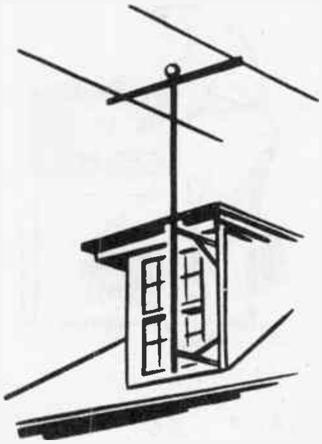

possible antenna location

Fig. 5-9

8. Stick to Contract provisions. If any question arises show your copy of the Contract and explain its provisions. If this doesn't clear up all questions, offer to put the customer in touch with the manager.

9. Ask permission before using the customer's phone. Make the call collect, if there is a toll. If the call might upset the customer it is better to excuse yourself for a few minutes and to use an outside phone.

inspect set carefully

Fig. 5-10

10. If a situation arises in which a more expensive antenna or other special installation is needed than your instructions call for, have either the dealer or the customer approve the extra charge in writing *before* you go ahead with the extra work. The customer is entitled to a full explanation of any extra charge. The best way is to show an official rate sheet from which the charge is determined.

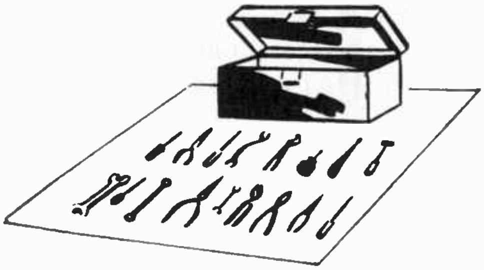

Fig. 5-11

11. Use a drop cloth as a place to set out your tools, and as a means for catching shavings, filings and stripped insulation. *Never* place tools on the customer's polished floor, rugs or furniture.

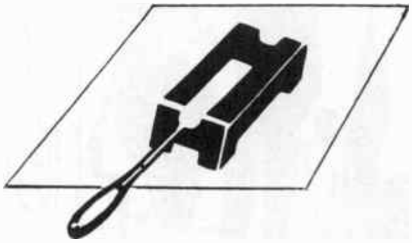

Fig. 5-12

12. Be careful of the customer's property. If you have to move furniture, ask permission and *be sure your hands are clean.* Be particularly careful when using a soldering iron.

13. Be sure to ask where to clean up, when it is necessary. Avoid use of the customer's towels and leave the wash basin clean and in good order. Remember that housewives are mighty fussy about their bathrooms and guest towels.

14. If you have to work in front of a family audience, don't encourage questions. But if questions are asked that involve your work, make your answers as simple and to the point as possible. Be courteous but firm in avoiding drawn-out conversations.

15. Carefully polish the face of the kinescope and both sides of the safety glass to be sure that

there are no finger prints or annoying specks to spoil the television picture.

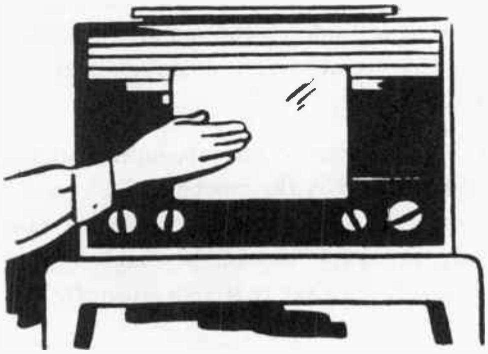

Fig. 5-13

16. When the set-up job is completed, clean up all refuse and polish the cabinet. Be sure to see that windows are closed, screens replaced and that everything is in order.

Fig. 5-14

17. Explain completely the operation of the set to the customer. Make sure that the proper use of each control is understood. Check to see that the customer has an instruction book.

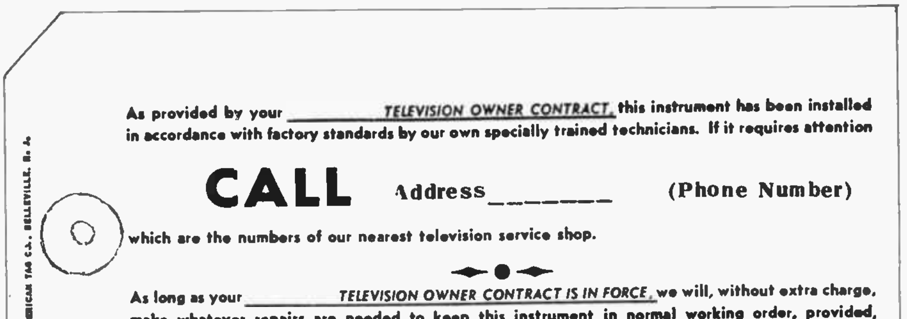

AMERICAN TAG CO., BELLEVILLE, N. J.

As provided by your ______ *TELEVISION OWNER CONTRACT*, this instrument has been installed in accordance with factory standards by our own specially trained technicians. If it requires attention

CALL Address_______ (Phone Number)

which are the numbers of our nearest television service shop.

◆

As long as your ______ *TELEVISION OWNER CONTRACT IS IN FORCE*, we will, without extra charge, make whatever repairs are needed to keep this instrument in normal working order, provided, of course, that such needs result from normal usage. (See your copy of this contract.)

(OVER)

IMPORTANT Troubles can be cleared most speedily if you make each of these simple checks **BEFORE** calling us.

1. **POWER FUSE** — Is it intact? (You can check by plugging a floor lamp into the same socket. But if you do, be sure to plug the instrument's power cord back into the socket again after making this test.)
2. **POWER CORD** — Is it plugged in? Making good contact?
3. **ANTENNA** — — Are both wires firmly connected to your instrument's terminals?
4. **CONTROLS** — — Are all controls set as called for in the instruction book?
5. **STATION** — — Is the station you want on the air? (If you can tune in another, it usually means the one you can't get is off the air.)
6. **PICTURE DEFECTS** — Check what you see against the pictures in the instruction book. (Refer particularly to uncontrollable interference effects.)

◆

(OVER)

Fig. 5-15

Fig. 5-16

18. Explain your organization set-up and show the customer the address and telephone number on the service tag which you attach at the back of the receiver.

19. Make your "Goodbye" important. If you have done a good job, you have gained a friend whose good will is passed on to friends and neighbors.

Fig. 5-17

Some "Don'ts" to Keep in Mind. – It is always best to remember the affirmative things that you should do. These are listed in the above set of rules of what to do on the installation job. However, there are also some "don'ts" that you need to watch out for.

1. Don't smoke on the job, unless specifically invited to do so by the customer. In general, it is best not to smoke when working in the home. If you are invited to smoke, be careful to dispose of ashes, and *do not rest your cigarette on furniture or wood trim.*

Fig. 5-18

2. Do not accept an alcoholic drink while on the job. The refusal of a drink offered by a customer will not be misunderstood if made courteously. Common sense tells you that it is not wise to drink on the job – not even a beer or two between calls.

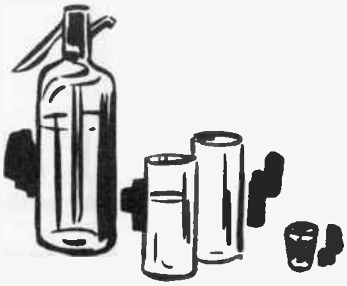

Fig. 5-19

3. Don't forget your promises or appointments. Do not make promises unless you know that you can keep them. Keep your appointments, and on time. Sometimes a customer will try to get you to promise something that you cannot deliver. The only safe procedure is to *make authorized promises only.*

4. Don't interrupt a customer who is trying to explain what he wants or what is wrong. Respect the customer's viewpoint. He has to pay the bill. By listening courteously you get at the facts, gain his confidence and find it easier to explain any points that need to be cleared up.

Fig. 5-20

5. Don't criticise the customer. Even when you know that he is at fault, be as diplomatic as possible and avoid giving any cause for offense.

6. Don't take anything for granted. Check everything carefully. Check all the controls and all the stations on the air. Check the customer's operation of the controls. Make sure that the customer knows how to handle the controls properly before you consider an installation job finished.

7. Don't have technical discussions with a helper on the job in the presence of the customer. In general that is bad form, particularly if it involves points of difference regarding repairs. Any lack of cooperation or coordinated judgment in the presence of the customer leaves a poor impression.

8. Do not neglect routine safety precautions. Most accidents are the result of carelessness or overconfidence. They can be avoided by just a little more care and thought in tackling each part of your job. Be particularly careful in any work on the roof. Make sure your ladder is on secure footing. Avoid dangerous positions, especially when working near the edge of the roof. Place tools and materials where they will not drop or endanger yourself or others. Don't try to handle a dangerous job alone. If additional help is needed call your supervisor. Do not try to save time at

Fig. 5-21

Fig. 5-22

the risk of a broken arm or leg. The customer would not like the idea of using the living room as an emergency ward. While you can depend on your company helping you to get back in shape again, its no fun nursing a broken "wishbone" and have your family wishing that you would learn to be more careful.

9. Don't blame anyone for the faults that you may run into. It is always better to correct errors if you know how, regardless of who made them. You are a valuable man, if you can do that.

10. Don't knock competitors. You are trying to win good will in the work that you do. Knocking the other fellow, or his product, does not win good will. Just point out the good points of your product and the customer can make his own comparisons.

11. Don't accept tips. Take pride in your company and your job. You carry a certain dignity as a representative of your company. By not accepting offered tips you gain the respect and the friendship of your customers.

Fig. 5-23

12. Don't forget that as a representative of your company you have a key role in keeping customers sold on a good product. By keeping them sold, you help the sale of other products and services, to the benefit of all employees, including yourself.

INSTRUCTING THE CUSTOMER

5-5. The records show that it is the little things that the customer doesn't quite understand that make him dissatisfied with his television receiver, far more than legitimate service troubles. That is why teaching the customer how to operate the receiver and explaining the service policy is such an important part of your installation job.

Teaching the Customer to Operate the Receiver. – In the last section of Lesson 4 we went through the step by step procedure of teaching the customer how to operate the television receiver. Of course, you are keeping all the lessons of this course handy for quick reference. So look over that section and pick the points that should be emphasized.

The points that you should remember when you are teaching the customer can be summarized as follows:

1. Be sure that all adjustments have been made and that the set is working properly.

2. Clean up thoroughly and polish the cabinet before calling the customer for instruction.

3. It is good psychology not to show a perfect picture to the customer right at the start. If the customer sees a picture that looks perfect, and then in handling the controls the picture goes out of sync, she immediately thinks that *you* have done something wrong. If you start your instructions with a picture that is out of sync, and then demonstrate and explain the right way to correct it, in the customer's eyes you have proved yourself to be an expert.

4. Go through the operating procedure step by step and explain why each step is taken.

5. Have the customer go through the procedure three or four times to be sure that she knows how to operate the controls. Be patient, don't criticize and give advice only to correct an improper adjustment.

Fig. 5-24

6. Turn over to the customer the "Television Instructions" that go with the set. Make sure that the customer knows where to find the operating instructions in this book and how to interpret them correctly.

Explaining Television Interference. – The principal cause of dissatisfaction with television reception is external interference which mars reception. In many cases such interference can be eliminated, but in many more cases there is nothing that the installation man can do. The following procedure should help to make this problem clear to the customer.

1. Turn to the section in the "Television Instructions" which deals with interference and show pictures of the various types of interference that can spoil the appearance of the television picture. It is important for the customer to see pictures of such interference in the book, *as troubles that might happen,* before she sees it in her own receiver. Then she can understand more readily that such troubles can be external and not the fault of the receiver.

2. Check the reception of all available stations in the customer's presence, and *explain the nature of any interference that shows up.* If such reflections and interference are troubles that you have not been able to clear up, explain why they cannot be eliminated.

3. Naturally, the customer wants the very best reception that is possible in the neighborhood. But if there are local conditions that limit the quality of reception, these conditions must be carefully explained and clearly understood .

That the customer really appreciates your efforts in explaining the proper operation of the receiver and the kinds of interference that might show up, is shown in such comments as these:

Dear Sir:

A (Name) television receiver was installed in my apartment last Thursday.

This installation was made by Mr. W______ and Mr. S____. After the set had been adjusted and tested, complete instructions were given me on its operation.

You are to be congratulated on the type of personnel you have selected to do this work as they are very efficient and courteous.

Very truly yours,
Mr. H. B________

Dear Sirs:

The television receiver recently installed in our home is the finest instrument we have ever seen, and we all enjoy the excellent reception and tone quality.

There is only one complaint. At a certain time each night especially on Channel 11, a radio ham interferes with the reception. It's too bad the FCC can't stop this interference.

Sincerely yours,
Mr. J. L ______

Where it is at all possible to clear up reflections or interference of course that should be done. But the customer must understand clearly just what is involved. Here is an example of a job well done:

Dear Mr. E_____:

Last month a technician from your office came to my home and said he was going to check the interference in this vicinity.

After he was through working on this problem he returned to my home and said he was pleased with the results. Well, I later carefully checked on Channel 4 for several weeks and was convinced that the interference was at least 90% eliminated.

Naturally some people to whom I have spoken still complain of all sorts of interference, especially on Channel 11 where they experience very fine lines running up and down the screen vertically. This may be something of another nature, but the performance on Channel 4 is definitely much improved.

I am well satisfied and personally wish to thank your Company for their fine efforts in this matter. It's sure a pleasure now to watch the set without those black lines.

Thank you,

Mr. I. D_______

The above case involved tracing the cause of electrical interference, which turned out to be an electric sign in the neighborhood. Installation of a suitable filter at the source resulted in greatly improved reception in the entire neighborhood. Of course, such work should not be undertaken without proper authorization by your shop manager.

In each of these cases the customer was satisfied that the best possible reception for the particular neighborhood was obtained. Reception was not perfect, but the limitations had been clearly explained.

But where the job of instruction and explanation is not done thoroughly, the customer starts to worry about every reflection and wiggle in the picture, with a result like this:

Gentlemen:

The television set that I have at home is wonderful, the reception is wonderful. The only thing that I am a little dissatisfied with, is that I can't get a good picture on Channel 7. I get a double image.

The men who installed the set told my wife that they can't do anything with it. They also said that there would be an improvement if we had our antenna extended, but they want $4.00 per hour per man which I don't think is fair.

Sincerely yours,

Mr. B. M_______

In this case the cause of the double image on Channel 7 had not been made clear to the customer. It is possible that the addition of another element to the antenna could clear up or greatly improve Channel 7 reception.

Where there is any question of a time and material charge the matter should be immediately referred to the supervisor at the office. A phone call might straighten it out.

The fact that the customer can be made to realize that there are limitations to the reception in certain areas is best illustrated by the following letter:

Gentlemen:

I must apologize for not writing this letter sooner, for if ever anyone deserved prompt commendation for a job speedily, efficiently and courteously executed, your organization does.

My family and I were very pleased with your prompt reply to my letter of complaint, and were overwhelmed with the painstaking and tireless efforts of your men (who incidently, were forced to work in a broiling sun) in doing everything that was humanly possible in order to give us perfect reception. That they did not succeed in accomplishing this fact is, we are convinced, not due to lack of either effort or skill.

We have been convinced that we reside in an area in which it is impossible to receive Channels 5 and 11 without a ghost, and in which Channel 13 comes in very poorly. As a consequence, we will have to make all allowance for these difficulties and accept them as inevitable until we can find housing in some more suitable location. In any event, please be assured that your organization has been exonerated of all blame in connection with these troubles as far as we are concerned.

Once again, let me assure you of our deep appreciation of all you have done in order to satisfy us. You may be certain that if I am asked my recommendation for the best TV set on the market today, yours will be my choice.

Very truly yours,

Mrs. M. F______

CUSTOMERS' COMMON QUESTIONS

5-6. In order to find out the kind of questions that customers commonly ask, a questionnaire was sent around to servicemen. From the suggestions sent in, the following list of sample questions and answers has been compiled. You may find them helpful in answering similar questions of your customers.

Sample Antenna Questions and Answers

1. Q. Why is my antenna different from my neighbor's?

   A. The type of antenna we install at any location is the type that we feel is the best suited for that particular location. The antenna that you have is one of our best. We try to give you the best possible reception for all the transmitting stations in your area. At some locations it is possible to favor reception from a particular station or reduce reflections by adding extra elements to the antenna. For each location we install the antenna that will work best there.

2. Q. Am I more likely to be struck by lightning, now that I have an antenna mast on the roof?

   A. Your mast has been grounded and serves as a lightning rod, so that you are safer than before. Your transmission line has a lightning arrestor installed on it to give you further protection.

3. Q. Why is my antenna pointed in a different direction than that of Mr. Jones on the next block?

   A. The direction that the antenna points may vary over a small area. At each location the antenna is oriented, that is it is turned, in the direction that results in best overall reception from all stations in that area.

Sample Lead-in Questions and Answers.

1. Q. Why didn't you use the black cable (coaxial cable)? Is it because it costs more?

   A. Not at all. We use the coaxial cable only where local interference makes it necessary.

2. Q. Is it alright to touch the lead-in wires?

   A. Normally it is safe. You may even wash the lead-in wire, if you are careful not to cut or scratch the wires or the plastic surrounding or separating them.

3. Q. What could happen if I did cut or scratch the wires?

   A. If you cut either of the two wires, your reception will be impaired. If the wires become bare because the insulation has been scraped off, corrosion may set in and make your television picture intermittent.

Sample Receiver Questions and Answers.

1. Q. Does the receiver use much power?

   A. The receiver uses a little more power than a standard broadcast radio receiver. It uses approximately the same amount of power as a floor lamp.

2. Q. How long will the picture tube last?

   A. The life of the picture varies. There is no exact time limit; some last longer than others. However, as long as you have our Service Contract, you will receive a new tube in the event of a failure.

3. Q. Does the Factory Service Contract cover the other tubes also?

   A. Yes.

4. Q. Why do I have so many controls on the front of my receiver?

   A. You do not have to adjust all the controls each time you use the receiver. We could put several of them on the back of your set. But in order that you may get the best performance from your receiver, we have them on the front where *you* may adjust them when necessary.

5. Q. Why should these controls have to be adjusted?

   A. Adjustments may have to be made because of the different signal strengths of different stations. Changes may be necessary at times because of variations in the temperature and humidity of the air, or the line voltage at the receiver.

6. Q. If I don't move the controls in the order you just showed me, will it hurt the set?

   A. No. The controls can be operated in any sequence. I have shown you the factory recommended method of operating the controls. This is the easiest way to adjust your set and usually gets the best results.

7. Q. Why do I have reflections, but my friend does not?

   A. Each and every location presents different reflection conditions. Our installation men orient the antenna in a direction to get as nearly reflection-free pictures as possible on all channels used. If analyzed closely, approximately 50% of all receivers in use today usually do have reflections in some form. Some are closely spaced and are not particularly noticeable, while others are a definite detriment to the picture. At present there is no known method of making a good location out of a poor one.

8. Q. Why are the pictures dark and the sound sometimes poor on certain stations?

A. When a station is transmitting a scene from a motion picture film, frequently the picture appears dark because the white background from the film does not come through clearly. This is particularly true, even on new films, if they become oily or dirty. This condition also results in poor or distorted sound. If you wish, you can call the station to determine whether or not the televised program was on film.

9. Q. Can I move the set once it has been installed in this spot?

A. Your set can be treated just as you would treat any other expensive piece of furniture or large radio console. One thing to keep in mind, however, is to avoid any heavy jolting or jarring of the set. This could damage tubes or upset circuit adjustments. And don't forget the limitations due to the length of the transmission line.

10. Q. Suppose I want to move it upstairs, downstairs or to another room?

A. Call your Service Company sometime before you wish to move the set. We will arrange to move the set for you on a time-material expense basis.

Sample Questions and Answers about Hazards.

1. Q. Does the picture tube produce X-rays and are they dangerous?

A. This question has been carefully investigated by experts from a number of large companies. They testify that direct view tubes give off no X-rays. Projection tubes in home sets, which operate on high voltages, give off some soft X-rays, immediately in front of the tube face. But the tube is enclosed in a metal barrel which prevents any rays from getting out of the receiver. There is no danger from X-rays in any present day home television receivers. All new developments are carefully checked to see that they do not present a hazard to the customer.

2. Q. Is there danger from the picture tube breaking?

A. This is a rare occurrence outside of tube factories. All necessary precautions are taken in installing a picture tube in your set. We've never heard of any injury in the home from the breaking or "implosion" of high vacuum picture tubes. But it is still not a good idea to let junior practice on the television set with his tool kit. Better teach him a healthy respect for the set and the picture tube, if he wants to keep on seeing "Howdy Doody".

3. Q. Does television produce eye defects or disease?

A. This matter, too, has been carefully investigated by the experts. According to a survey of authorities made by the Television Broadcasters Association, the general consensus of opinion is that the only thing you can get from watching television is a pair of tired eyes. Just as you can from reading or watching a movie.

4. Q. How long can I watch television without eye fatigue?

A. The experts agree that it is best not to watch your television set for more than three hours of continuous viewing. You can keep the set on and turn to something else every once in a while to rest your eyes.

The following procedure has been recommended to prevent eye strain.

(1) Don't sit too close to the television screen. The proper distance depends on the size of the viewing tube. A good rule to find the best viewing distance is to multiply the width of picture by 10. On this basis the best distances are approximately as follows:

Tube Size in Inches	Viewing Distance in Feet
20''	16'
16''	13'
12''	10'
10''	8'

(2) Do not put out the lights when watching the television screen. The eyes try to adjust themselves to the level of the light in the room. When the eye shifts from the dark to the light of the television screen, there is a conflict which may cause a headache. Always

have some light in the room, but do not have it shine directly on the face of the picture tube.

(3) Don't look at the screen steadily, but rest the eyes by looking away from the screen now and then.

(4) Television won't hurt your eyes; but, just like the movies, if you watch too long your eyes get tired.

Sample Questions about Service.

1. Q. Whom do I call if something goes wrong with my set?

A. The telephone number of the Service Company responsible for servicing your set is typed on the lower right hand corner of your Service Contract. Also it is on the tag attached to the rear of your receiver.

2. Q. What happens when my year's guaranty is ended?

A. Approximately two weeks before your service contract expires you will be notified and asked if you wish to renew your contract for another year.

3. Q. How much will a renewal contract cost me?

A. The cost varies with the type of installation, but normally it should be less than the original fee.

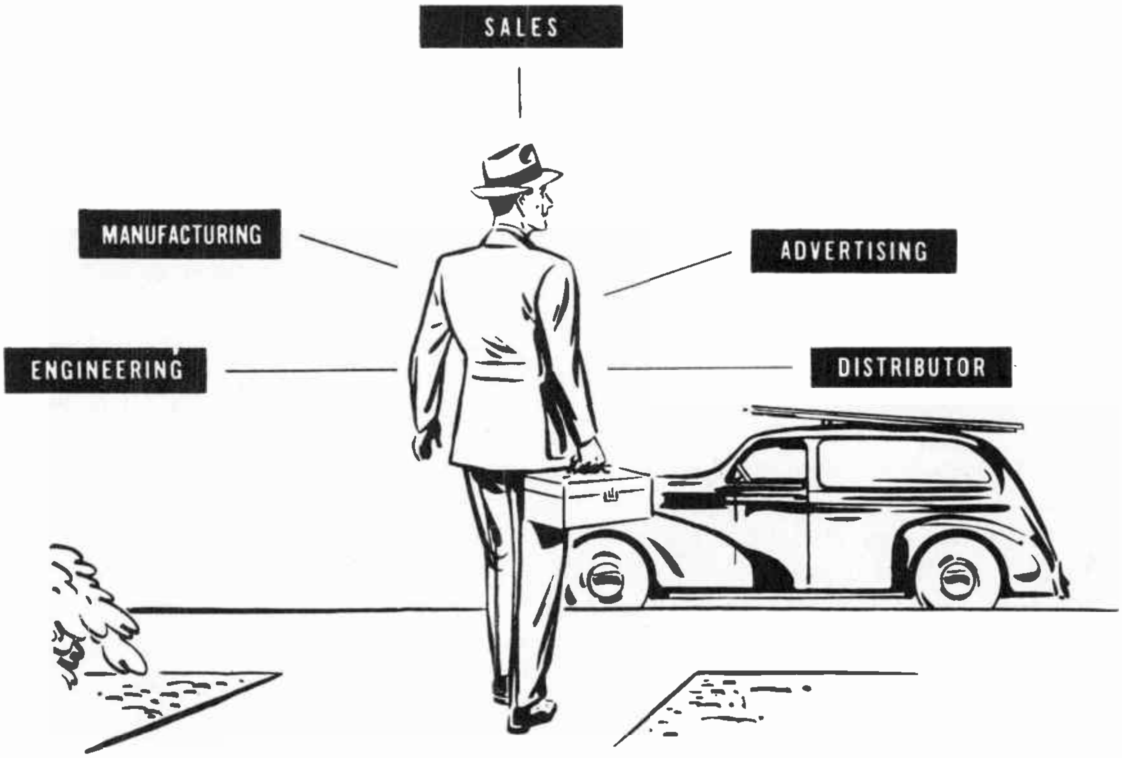

Fig. 5-25

◆

NOTES

NOTES

NOTES

NOTES

NOTES

TELEVISION SERVICING COURSE

PREPARED BY

RCA INSTITUTES, INC.

A SERVICE OF RADIO CORPORATION OF AMERICA

HOME STUDY DEPARTMENT
350 West 4th St., New York 14, N. Y.

LESSON SIX

RECEIVING ANTENNAS

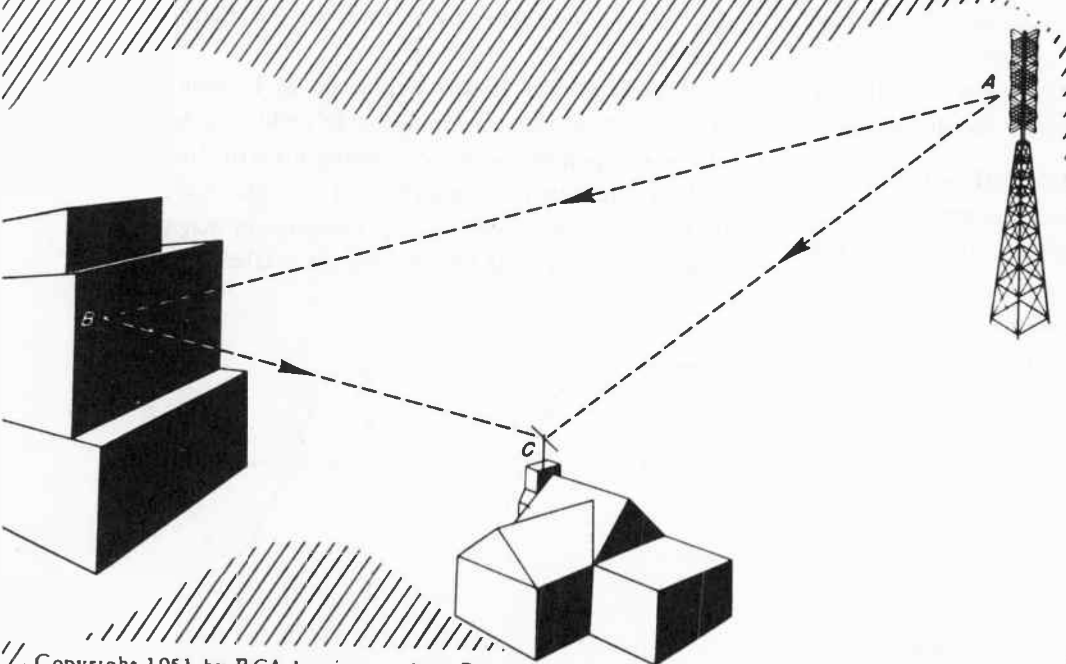

Lesson 6

IMPORTANCE OF THE ANTENNA

6-1. It was pointed out in previous lessons that the receiving antenna is a very important part of the complete television receiving system. Upon the proper choice, installation, and orientation of the antenna system depends the success or failure of the television receiver as a means of reproducing a good picture and good sound.

For example, if you neglect to install an antenna with reflector when needed, there might appear on the screen a double or even triple image. These ghosts spoil the customer's enjoyment of the picture. A ghost in the picture might also be caused by incorrect orientation of the antenna. To cite another example, a television receiver located in a fringe (weak signal) area requires an antenna with relatively high *gain* (a term that will be explained later in this lesson). Failure to provide such an antenna may result in the picture appearing very "snowy". In fact, there may not be any picture at all because of insufficient signal at the receiver antenna terminals. In addition to these more obvious results, troubles such as poor synchronization or the best sound not tracking with the clearest picture may be eliminated when a good antenna installation supplies enough picture signal to the receiver.

In this lesson we shall deal with various types of antennas, their characteristics and uses. Specifically, we shall cover the following points:

a. Elementary principles
b. Bandwidth
c. Directivity
d. Gain
e. Mechanical Characteristics

ELEMENTARY PRINCIPLES

6-2. Generally speaking, any piece of wire (or other conductor) may be considered as an antenna. The space surrounding us is filled with all sorts of electric waves, which are continually inducing currents in any and all conductors. Thus, even the steel frame of a building is an antenna – or a steel bridge or water tower. However, such objects are not practical antennas for our purpose, and of course it might be a little difficult to attach our receivers to the nearest suspension bridge. It is necessary, therefore, to supply with each receiver (or group of receivers) a *local* conductor designed to do a specific job efficiently. Such a conductor must meet very definite requirements. First, it must have the proper electrical characteristics to provide sufficient pickup, proper frequency response and bandwidth, and correct directional properties. Secondly, it must have certain mechanical characteristics. Some of these are: light weight, strength, rigidity and resistance to corrosion. It should be relatively simple to mount, and be rotatable through 360° during preliminary installation.

The transmission line (lead-in) must also meet rigid standards of design and construction if it is to prove satisfactory, but this is something we will discuss in a later lesson.

Electromagnetic Waves. – In Lesson 2 you read that a high frequency current, which goes through its cycle of variations millions of times per second, flows in the dipole transmitting antenna. This sets up an electromagnetic field that reverses at the same rate as the current.

Remember that it was explained in Lesson 2, Sec. 2-5, that the electromagnetic field consists of two components – an alternating electric field, and an alternating magnetic field at right angles to it. We can represent the changes in magnitude and direction of either component like this:

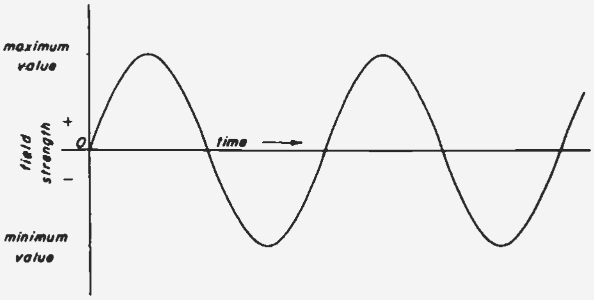

Fig. 6-1

Frequency. – This graph shows how the field varies with time at any one point in space. The parts of the curve below the zero line represent instants of time when the direction of the force exerted by the field is opposite to that during the time intervals represented by the parts of the curve above the zero line. One complete series of positive and negative values is a *cycle*. The field thus reverses its direction *twice* in each cycle. The number of complete cycles each second is the *frequency* of the signal.

Thus, for a specific signal frequency in Channel 2, the field would be reversing its direction 112,000,000 times each second. Its frequency would be half this number – 56,000,000 cycles per second, or 56 megacycles per second.

As we mentioned previously, the high frequency electromagnetic field travels outward through space, from the transmitting antenna, with a velocity of approximately 186,000 miles per second or 300,000,000 meters per second. A meter is 39.37 in., a little more than a yard. The field arrives at the receiving antenna in the form of *waves* much as waves of water reach the shore. Possibly for this reason, the reversing electromagnetic field is referred to as radio *waves*. You have all seen, at one time or another, waves or ripples in the water. The shape of the waves or ripples is such that there is a point of greatest height (maximum value) followed by a point of least height (minimum value) and again followed by another similar point of greatest height, and so on. This characteristic is also true of electromagnetic waves and is shown here:

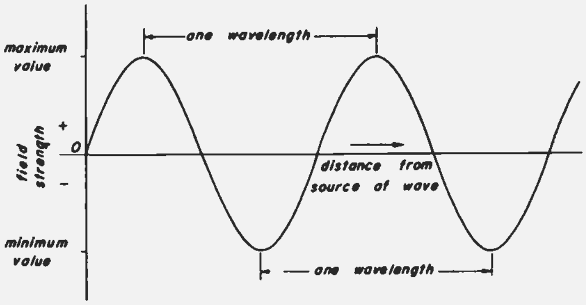

Fig. 6-2

This graph looks at first glance just like Fig. 6-1. But whereas Fig. 6-1 showed how the field varied with time at a particular point in space, Fig. 6-2 shows how it varies with distance at a particular instant of time.

Wavelength. – The distance between any two adjacent maximum (or minimum) points along the wave is known as the *wavelength*. In an electric wave, wavelength can be measured as the distance between two points of maximum (or minimum) voltage. The idea of wavelength is very important to us, since antennas are usually measured in terms of wavelength.

Actually the wavelength doesn't have to be measured between minimum or maximum points, but can be taken as the distance between any two points on the wave that have the same value and are changing in the same direction. This corresponds to one cycle of the wave motion.

It is important to note that wavelength depends upon two other factors already discussed. One of these is the frequency of the wave, the other is the velocity of wave travel. To be more specific, the wavelength is equal to the velocity divided by the frequency of the wave.

$$\text{Wavelength} = \frac{\text{Velocity}}{\text{Frequency}}$$

The velocity of the radio wave in space is fixed at 186,000 miles per second or 300,000,000 meters per second. Therefore, wavelength varies with the quantity that is not fixed, which is frequency. Thus any *increase* of frequency results in a decrease of wavelength. A lower frequency wave has a longer wavelength. Television signals have very high frequencies, and correspondingly short wavelengths. (Hence the term "short wave".) Wavelength is usually measured in meters. For example, at 60 mc. the wavelength is 5 meters; at 200 mc. the wavelength is 1.5 meters. Because they are short, wavelengths in the television band are often specified in feet or inches. For 60 mc. the wavelength is 15-2/3 ft., and the wavelength for 200 mc. is 5 ft.

Measurement of Antennas. – As we said before, antennas are measured in wavelengths. Thus, an antenna is said to be 1/2, 3/4, 1, 2, or more wavelengths long. The exact length in meters or feet depends on the chosen best frequency, which is the lowest frequency it is desired to receive. (We'll explain later why the antenna length is determined by the lowest frequency, rather than some frequency in the middle of the band.) A dipole antenna, which is the type generally used in television, is 1/2 wavelength long at its best frequency. This refers to the overall length, as shown here.

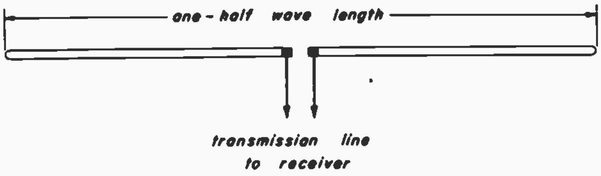

Fig. 6-3

Actually, we should modify that last statement, and say that the *effective length* of a dipole is ½ wavelength at its best frequency. The actual *physical* length of the antenna is a little *less* than ½ wavelength. The difference between actual length and effective length is due to something called *end effect*, which has to do with the way the electromagnetic field behaves close to the ends of a physical antenna rod. This is one reason why, if you try to compute the length of a dipole from the formula given above for wavelength in free space, you will come out with a slightly different answer than you would get by taking a tape measure and measuring a dipole cut for some particular frequency.

ANTENNA BANDWIDTH

6-3. One of the problems involved in television reception is antenna bandwidth. This is the total frequency spread, in megacycles, to which the antenna will respond efficiently. For present TV channels, a television antenna should respond adequately to a band of frequencies from about 54 megacycles to 216 megacycles. This represents a total bandwidth of 162 megacycles and covers television Channels 2 through 13. Actually the channels run from 54 to 88 mc, and 174 to 216 mc.

We mentioned in Lesson 2 that a dipole antenna had a certain *best* frequency at which it provided the greatest amount of signal for the receiver. Suppose, then, that we build an antenna to work most efficiently at 54. mc., (its best frequency). From what we have said before, it is apparent that the antenna should also receive signals efficiently up to 216 mc., or *four* times the original best frequency.

It will help you to appreciate the bandwidth problem if you examine the following simplified drawing for the response of a dipole antenna:

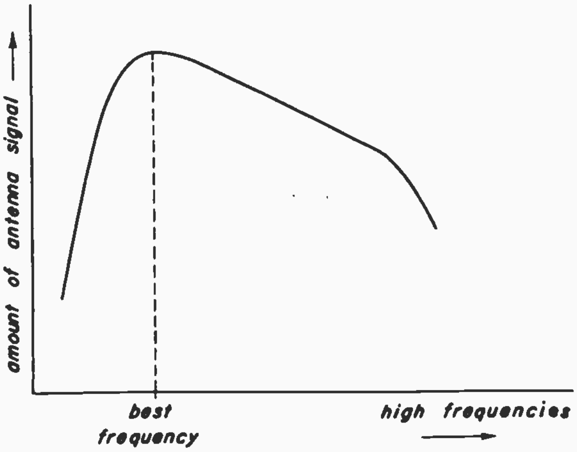

Fig. 6-4

You can see by looking at the drawing that the pickup effectiveness, or *response*, of the dipole rises rather sharply to a peak at some frequency which we have been calling its best frequency. As we go above this best frequency, the response drops and levels off. The signal fed *to the receiver* at the best frequency is much stronger than the amount at any other frequency (assuming all signals are of the same strength at the antenna).

You might think, then, that getting the highest and sharpest response is the right way to operate the antenna. Unfortunately, for a television antenna, this is not the case.

Well then, if we cannot operate *just* at the best frequency of the dipole, what can we do? In Lesson 2, it was mentioned that the dipole is able to receive relatively well, signals *higher* than the best frequency; but the response is very poor for signals lower than the best frequency. From examination of Fig. 6-4, we can see that the dipole response is relatively flat and even, once we drop down on the high frequency side of best frequency. It is true that the response is less here than at best frequency, but this is of lesser importance than the fact that the response is broad and *even.* This is the portion of the antenna response curve that we will use.

In order to produce a dipole antenna with such characteristics, it is necessary that it have a certain definite length. The length is so proportioned that the best frequency, often called the *resonant* frequency, occurs near Channel 2 (54-60 mc.), as shown in Fig. 6-4.

It should be mentioned briefly here that the impedance of the transmission line also has an effect on the bandwidth, but this is something to be discussed in a later lesson. Another factor affecting bandwidth is the *diameter* of the dipole. It so happens that the bandwidth increases with larger diameter dipoles and this is one of the reasons for the use of fairly large diameter tubing rather than thin wire. More about this later.

DIRECTIONAL RESPONSE OF AN ANTENNA

6-4. We previously mentioned that an antenna had to have the correct *directional response* for proper reception on all channels. Let's see what we mean by directional response (or directivity) of an antenna. A receiving antenna is said to have *directivity* when it has greater pickup from certain directions than from others.

In Lesson 2 we learned that the dipole would receive signals best when it was *broadside* to the transmitting station, and poorest when it was pointed like a spear at the transmitting station. We also saw that if the dipole was pointed at an angle of about 45° or so to the transmitter it would receive moderately well. It is apparent from this, that as we rotate the dipole with respect to the transmitter, the reception will change from maximum to minimum and back to maximum as we rotate through 180°, starting in the broadside position.

Antenna Pattern. – We are now going to proceed a bit further along these lines and develop the idea of the directivity pattern of an antenna. We'll start by considering the directivity pattern of a simple dipole, operating at its best frequency, which is also the frequency of the transmitter. Later, we'll use this information to show the directional response of a number of other antenna types. The directivity pattern enables us to do this a lot more completely than we could by just using arrows like those in Figs. 2-19 and 2-20, of Lesson 2.

Let us imagine that we have a mobile transmitter mounted on a truck. We are going to have this imaginary truck drive around in a perfect circle with a radius of, say, 5 miles. At the exact center of the circle our dipole antenna is *permanently* mounted and so positioned that the ends point East and West like this:

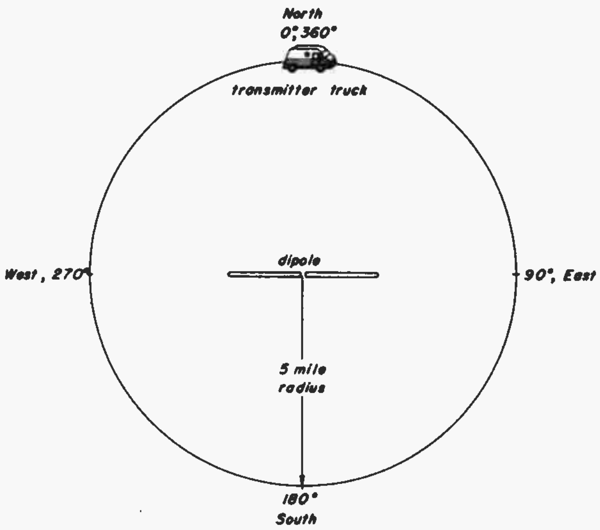

Fig. 6-5

We must assume that we have some means of measuring the relative amounts of dipole pickup, such as a special calibrated receiver, or an r-f voltmeter.

Pickup from 0° to 90°. – Now we drive the truck to the most northerly position, or 0°. We'll call this position 0°, and designate other positions around the circle in terms of the number of degrees of arc travelled by the truck from this point, as in Fig. 6-6.

Now we turn the transmitter on and take a reading of signal voltage delivered by the dipole

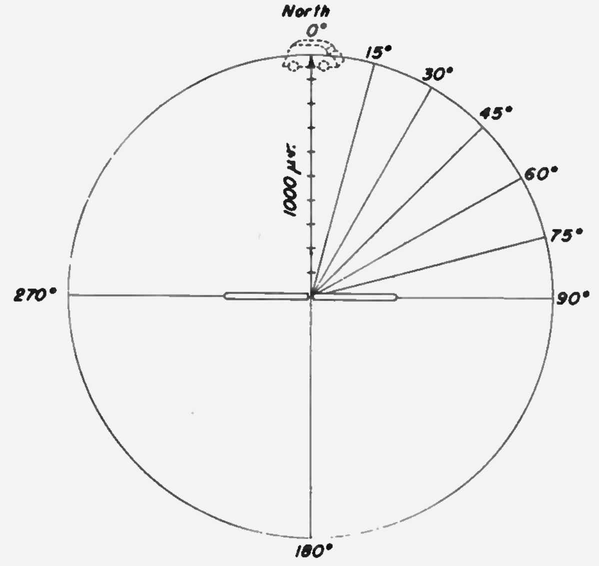

Fig. 6-6

to its terminals. Let us suppose that we get a reading of a certain number of electrical units – say 1000 microvolts. (The prefix "micro" or the symbol μ means one millionth, so that a microvolt is one millionth of a volt.) This will be the maximum amount of pickup possible since the dipole is *broadside* to the transmitter. The electric waves are arriving *parallel* to the dipole and so, will induce the maximum currents in it.

In order to plot a graph of directional response, we draw a circle and mark off 15° angles around the center. From the center draw an arrow to 0°, ten length units long, corresponding to 1000 microvolts, as shown in Fig. 6-6. This represents the maximum pickup possible. Now let's drive the truck in the clockwise direction to the position on the circle marked 15° (the dipole remains as before). We now take a reading of signal voltage from the dipole and find that it has decreased. The new reading is 950 μv instead of 1000. So draw an arrow in the direction pointing to 15°, with a length that corresponds to 950 μv, as shown in Fig. 6-7. The reading has decreased because the electric waves are no longer arriving at the dipole in a parallel position but are now 15° off the parallel position, and therefore the currents induced in the dipole are less than before.

In a similar manner we proceed with the truck to 30° and take a reading at the dipole. The pickup has decreased still more, to 850 μv, and for the same reasons we just discussed. An arrow of corresponding length is drawn towards 30°. When the truck is at 45° the reading is 700 μv; at 60° the reading is 500 μv; at 75° the reading is 350 μv and at 90° (East) the reading is very small, or is only about 50 μv. As indicated in Fig. 6-7, arrows whose lengths are proportional to these readings are drawn in this polar diagram.

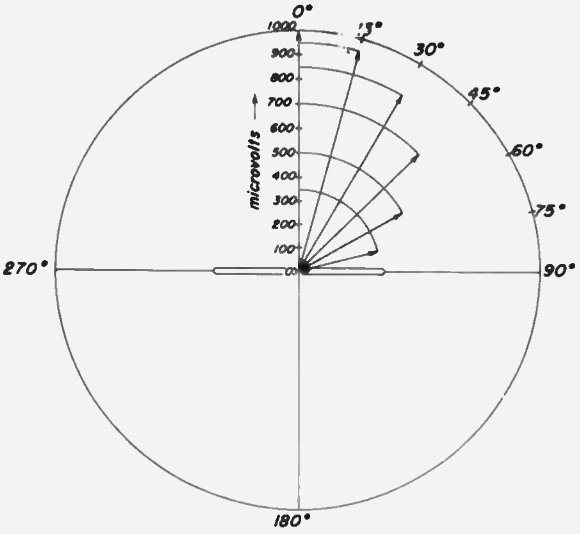

Fig. 6-7

The reason the reading at 90° is so small is that the electric waves are now arriving perpendicular to the dipole, and induce practically no currents at all in it. This is the direction of minimum pickup. If the dipole were infinitely thin, the pickup at 90° would theoretically be zero. But since a physical dipole has some thickness, there will be some small pickup from this direction of minimum response, which is called a *null*.

We can now join the ends of all the lines with a smooth curve, and this gives us one-fourth (between 0° and 90°) of the complete directivity pattern shown in Fig. 6-8.

Pickup Between 90° and 180°. – Let's move another 15° around the circle to 105°. Instead of decreasing further, we find that the pickup has now actually increased and is the same value as it was at 75°. As we move further to 120° we get another increase to 500 μv which is the same as the reading at 60°. At 135° the reading is 700 μv (same as 45°); at 150° the reading is 850 μv (same as 30°); at 165° the reading is 950 μv (same as 15°); and at 180° the reading is 1000 μv, which is the maximum pickup and the same value as at 0°. Thus it is apparent that the pickup of the dipole is a maximum when the waves are arriving broadside to the antenna from *either the front or back.*

Pickup From 180° to 360°. – If we complete the trip around through 270° and to 360° in steps of 15° each, we will find that we will trace out an exact duplication of the first 180°. This completes our dipole directivity pattern, which we can now fill in thus:

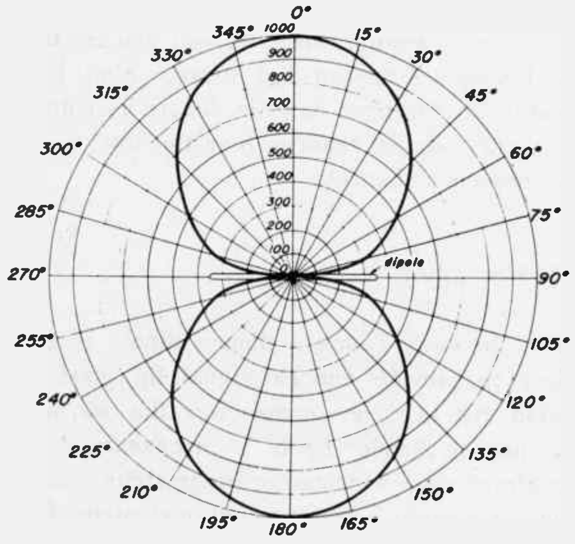

Fig. 6-8

The individual lengths of the various lines indicate the relative pickup of the dipole from the directions indicated. We assume that the pickup voltage of the antenna changes continuously as the truck drives from point to point around the circle. So instead of drawing lines, we can just draw the *curve*, knowing that if we wanted a line representing the antenna signal voltage developed by waves from any particular direction, its end would lie on the curve.

We can see that the maximum pickup occurs when the dipole is broadside to the transmitting station (either front or back), just as we showed in Lesson 2. Also, minimum pickup occurs when the dipole is pointed like a spear at the transmitting station. But our complete directivity pattern now tells us *exactly how much* pickup we can expect from *any other direction.*

Dipole Response at Higher Frequencies. – We must now point out a very important fact. This exact pattern holds true only when the dipole is receiving signals at or near its resonant (best) frequency. As the signal frequency received by the antenna is increased, the pattern shape changes. For example, at Channel 6 (82-88 mc), the response of a dipole cut for Channel 2 (54-60 mc) looks something like this:

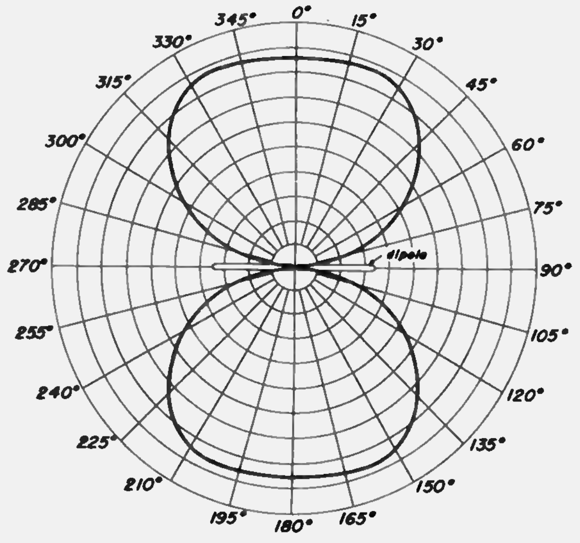

Fig. 6-9

You will notice that the direction of maximum reception is no longer exactly broadside but has shifted to the side. At this channel there is a reduction of pickup in the broadside direction. This is generally not too serious and still provides good reception. However, when we go to the high frequency channels (174-216 mc) a very radical change in directivity occurs as shown in Fig. 6-10 on the next page.

As you can see, what were once two sections (or *lobes*, as they are customarily called) are now split into *four*. What before was the direction of maximum pickup (broadside), now becomes a direction of *minimum* pickup. For high frequency channels, therefore, signals arriving broadside to an antenna cut for the low frequency channels

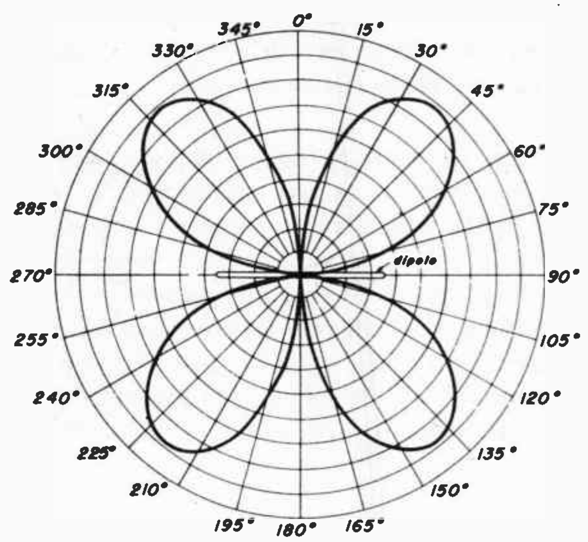

Fig. 6-10

will be received poorly, compared to low frequency channels in the same direction.

One solution for improving the pickup at the high frequency channels, when using an antenna cut for the low channels, would be to rotate the antenna about 45° with respect to the transmitting station. Increased pickup at the high frequency channels would now occur, *but* with a reduction of pickup at the low frequency channels. If you refer back to Fig. 6-8, you will see that the pickup at 45° is only 700 units compared to a maximum of 1000 units at 0°, which is a reduction of 30%. Under some conditions this may actually be a satisfactory solution, but not in all cases. More about this problem later in the lesson.

Antenna Polarization. – It was previously mentioned (in Lesson 2) that there is something about the antenna and the radio wave called *polarization*, and that in television, *horizontal* polarization is the type used. The direction of polarization refers to the plane of the electric field in the radio wave, and is the same as the physical position of the transmitting antenna. All television transmitters use antennas whose elements lie principally in the horizontal plane and transmit a *horizontally polarized* electric wave.

To be most effective, television receiving antennas should also be horizontally polarized to receive the horizontally polarized radio wave – that is, they should be erected parallel to the earth's surface. The preceeding discussion of dipole directivity was based on the premise that the receiving antenna *was horizontally polarized.*

At television frequencies, horizontal polarization is preferred because noise (static) interference is reduced and the possible distance of transmission and reception is somewhat greater. Other advantages are the ease of getting correct directional response, better mechanical design, and better electrical balance to ground.

You should remember that the directional characteristics we have been discussing apply only to a simple dipole, without any additional elements. The addition of any such elements will modify the directional pattern, depending upon the particular arrangement. We will discuss this in following sections of this lesson. Also, it is important to remember how the directivity pattern of a simple dipole changes from the low to the high frequency channels.

ANTENNA GAIN

6-5. In many cases a simple dipole is sufficient to provide enough signal for good reception, but in some antenna installations, more than just a simple dipole is necessary. For example, receivers located in fringe areas usually require a complex antenna to put more signal into the receiver than a dipole alone could provide. A simple dipole, under such conditions, would provide such a weak signal that the picture would be very "snowy". The easiest way to improve the picture quality under such conditions is to increase the so-called *gain* of the antenna.

What is gain? Well, basically *gain is the amount by which some specific antenna is more effective in delivering signal to the transmission line than a simple dipole.* For instance, if a complex antenna delivers twice as much signal as a simple dipole (from the direction of maximum pickup), we say it has a gain of *two.* If it delivers three times as much signal, it has a gain of three, and so on.

To take another example, suppose that our simple dipole of Fig. 6-6 is receiving a signal from the North, the direction of maximum pickup, and provides 1000 microvolts at the receiver terminals. We replace it with a more complex antenna and orient it so its direction of best pickup is also to the North. Now suppose we measure the pickup of the new antenna from the North and find it to be 2,500 microvolts at the receiver terminals. The gain of the new antenna is 2.5 over the simple dipole.

How do we get an antenna to have more gain? Well, the simplest method is to place another metal rod *behind* the dipole and in the same plane. This rod is called a *reflector.* Another method is to place one dipole *above* another. This is referred to as *stacking* of dipoles. We might add a warning here that you cannot mount the additional antenna elements any old way, but must have the correct spacing between elements to obtain the desired results. There are various other possibilities, and we will discuss a number of these and their characteristics in later sections of the lesson. Changing the gain of an antenna also has an effect on its bandwidth.

Effect of Frequency. – Gain is affected by the frequency the antenna is receiving. For instance, an antenna that has a gain of 3 for Channel 2, may have a gain of only 2 for Channel 6. If Channels 2 and 6 were the only ones in the area, and if Channel 6 was normally received much weaker, it might be desirable to use an antenna with maximum gain at Channel 6. This is not standard practice, but may be necessary if all else fails. In such a case, it is true that we are favoring the weaker station at the expense of the stronger one, but the chances are that the stronger one can still deliver a satisfactory signal to the receiver.

Noise. – Gain may also be a very important factor if the area in which the receiver is located is subject to severe electrical interference. Such interference does not particularly disturb the sound reception because the sound is received by an FM system which is less sensitive to such interference. It does, however, cause disturbances in the picture that are very annoying. The effects of such disturbances may sometimes be greatly reduced by providing an antenna with relatively high gain. This generally increases the signal pickup more than the interference pickup and permits the signal to *override* the interference to a greater degree. We often speak of this effect by saying that we now have a greater *signal-to-noise ratio.*

We have given just a general discussion here of what antenna gain is and why we often need it. This will be applied to specific antenna types as we take them up one at a time.

MECHANICAL CHARACTERISTICS.

6-6. All television antennas designed for outdoor installation must meet certain minimum requirements of mechanical design. It is not enough just to hang any old piece of wire or rod up on the roof in a haphazard manner.

There are several basic requirements which every outdoor television antenna must meet. These are:

1. It must be so mounted that there is no reasonable chance that it will fall.
2. It must possess reasonable mechanical strength.
3. It must possess reasonable mechanical rigidity.
4. It must be resistant to corrosion.
5. The elements must not crystallize and break due to wind vibration.
6. It must be easy to assemble and mount.
7. It must be reasonable in cost.
8. The structure should be reasonable in size and weight, and present a good appearance.

We shall discuss each of these points and see what the various requirements are.

Mounting. – All outdoor antennas are subject to strain from vibration, as well as wind and ice loading. Also, birds perch on antennas – and near the seashore this becomes an appreciable problem, for seagulls are no lightweights; as birds go. It is essential that whatever the mounting involved, it be capable not only of supporting the dead weight of the antenna, but also of resisting all the various other strains and vibrations that may occur. The mounting must be highly resistant to corrosion and mechanical failure to prevent the possibility of its breaking and permitting the antenna to fall. If this should happen, it not only means additional time, labor, and money in replacing the antenna, but might also result in serious personal injury to anyone in the immediate vicinity. In addition, the reputations of installation crews and of the company would certainly suffer. Specific types of mountings and their problems will be discussed in detail in Lesson 7 and 8.

Mechanical Strength and Rigidity. – There are several points to be considered here:

a. Wind pressures
b. Ice loading
c. Vibration of elements
d. Vibration of cross arm

It is possible, in many areas of the country, to experience occasional wind volocities ranging all the way up to possibly 85 or 100 miles per hour. While such high winds are not common, they do occur often enough to make it imperative that the television antenna does not fail under such strain. While it might not be reasonable to design all antennas to withstand constant velocities of 100 miles per hour, the antenna should certainly be capable of withstanding winds in the order of 75 to 80 miles per hour, occasionally, without failure.

Not only is it imperative that the antenna does not fail completely under these circumstances, but also that the elements do not *bend* appreciably. Any considerable bending will cause a change in antenna characteristics. Also, it would get a little monotonous to have to climb up on the roof to straighten the antenna after every windstorm. Excessive and continuous bending will of course eventually result in breaking the elements.

Ice Loading. – One of the strains to which the antenna is subjected is that due to the formation of ice. An accumulation of ice over a period of time may cause bending due to the weight of the ice. In addition to this, the ice formation increases the effective diameter of the antenna and makes it more subject to wind effects. That is, an antenna that could stand winds of say 75 miles per hour without any ice, might fail in the same wind if it were loaded with enough ice.

In general, outdoor antennas are designed to withstand about 1/2 inch of hard ice loading without bending or failure of the elements.

Vibration of Elements. – The dipole antenna for the low frequency channels is about 8 ft. long, each of the two rods being about 4 ft. They are supported only at the center, leaving about 4 feet on each side of the support hanging free. Since the elements have a diameter of 3/8 inch, it is not hard to see that they could sway or vibrate when exposed to winds. Any such *excessive* vibration might have two major objectionable effects. First, there is the possibility of causing interference in the picture. It has been proven that a vibration of only a few inches at the outer ends of the antenna will cause objectionable changes in picture size and intensity. Secondly, antenna vibration may cause crystallization of the antenna elements, which will eventually result in breakage. In general, antenna elements made of solid rods are not suitable because they tend to vibrate too much. More suitable elements are constructed of simple hollow tubing, or a combination of solid and hollow tubing.

Vibration of Cross Arm. – A type of vibration that may occur in the cross arm is known as *torsional* (twisting) vibration. The antenna elements are mounted on a piece called the cross arm. In some winds the elements will tend to rock and in turn will tend to twist the cross arm. If the cross arm is not sufficiently rigid, a rocking motion will be set up. Such a rocking motion, if excessive, will cause changes in the picture similar to that caused by element vibration. The cross arm should be suitably constructed so as to limit torsional vibration to a very small amount.

Corrosion. – An antenna, to be efficient, must be a good conductor of electricity. If it is not, a lot of the signal may be lost in overcoming the antenna resistance. It is interesting to note that at the high frequencies in television, the currents flow upon the *outer* surface of the antenna element only and not through its cross section. (This is called "skin effect".) As a result, it is imperative that the outer surface be maintained smooth, clean, and free of corrosion. Any corrosion forming on the antenna surface will "eat up" some of the received signal and reduce the picture strength at the receiver. Corrosion may also form around the connecting terminals to the transmission line and thus further reduce the signal to the receiver. To prevent this form of corrosion, antenna elements may be constructed of such materials as Dural, or corrosion proofed steel. All terminals and bolts must also be constructed of corrosion proof metals.

Crystallization. – We have all, at one time or another, taken a piece of wire or other metal and broken it by bending it back and forth a number of times. The metal will withstand just so many bends, after which it becomes very stiff and suddenly snaps. The metal is said to have become crystallized, or *fatigued*, due to bending, and this crystallization is the cause for the sudden breakage. Antenna elements are subject to considerable bending due to the effects of wind and must therefore be constructed of suitable metals to prevent early crystallization and breakage. Such metals as Dural and steel appear to have great resistance to crystallization.

THE DIPOLE ANTENNA

6-7. Of all the various antenna types, the dipole is the simplest. It consists merely of two rods mounted on a suitable cross arm support, as shown here:

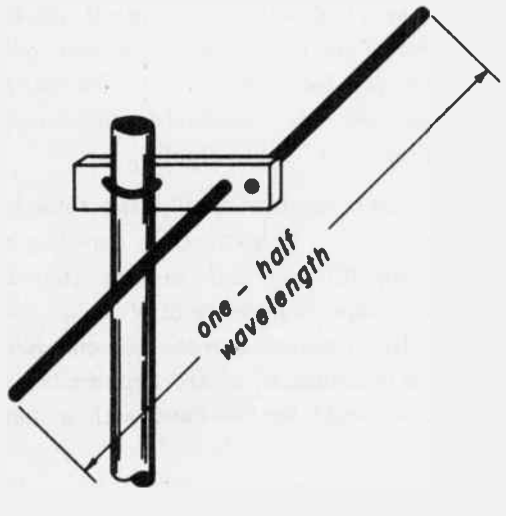

Fig. 6-11

The overall length of the low-band dipole from end to end is such that its best frequency is approximately at Channel 2, as previously stated.

Dipole Assembly. – There are various ways in which the antenna may be assembled. For example, the rods could be thrust through holes in a wooden cross arm and secured with washers and nuts. Another possibility would be to have the dipole and cross arm all assembled, but normally folded up for transport. When ready for use, the assembly could be opened up like an umbrella and secured by wing nuts, locking bolts or other means. The latter method greatly reduces assembly time of the antenna but poses some serious problems in providing proper mechanical characteristics, such as resistance to ice loading and wind pressure.

In any event, the transmission line is always fastened to the ends of the rods secured by the cross arm. The connections must be good electrically and mechanically, and made with corrosion proof materials.

Dipole Bandwidth. – Of all the various antenna types we shall discuss, the dipole has a bandwidth characteristic that is superior to most other types. It will cover all of the low frequency channels (2 to 6) satisfactorily if cut to Channel 2. There will be a reduction of signal strength at Channel 6 with respect to Channel 2, but this is usually not too serious. It is possible to cover all of the high frequency channels (7 to 13) properly with the low-band dipole, cut for Channel 2, by orienting the antenna at an angle about 45° away from the broadside direction. The reason why this is necessary is that the dipole's directional response curve breaks up into four separate lobes for the high channels, as shown in Fig. 6-10.

The bandwidth characteristics of the dipole will be better at the high frequency channels, because the channel bandwidth, relative to the lowest frequency in the band, is less for the high band channels than for the low channels.

To illustrate this point, we note that the low channels range from 54 mc to 88 mc. The difference between the two frequencies is 34, the width of the band in megacycles. Now if we divide the width of the band by its lower frequency limit (34 divided by 54), we get an answer of 0.625. This is the relative width of the low band – 62.5% of the lowest frequency to be received.

To compare this with the high band, 174 mc to 216 mc, we subtract 174 from 216 to get 42 mc., the width of the band. Dividing 42 by 174, we get 0.24, showing that the relative width of the high band in only 24% of its lowest frequency.

This bit of arithmetic shows why it is easier to get an antenna to cover the high band than the low, since the bandwidth characteristics of an antenna depend more on the *relative* bandwidth to be received, than on the absolute bandwidth in megacycles.

Directional Characteristics. – The directional characteristics of a dipole have been thoroughly discussed in Section 6-4 of this lesson. The essential features of the dipole's directivity pattern are:

1. It receives the most signal at or near its best frequency from directions broadside to the antenna, both front and back.
2. For higher frequencies, the direction of best response shifts toward the antenna. The response of a low band dipole for the high frequency channels breaks up into four lobes at angles of about 45° from the broadside direction.

Dipole Gain. – From our discussion in a preceding section in this lesson we learned that a *resonant* dipole was the standard upon which the gain of other antennas is based. We cannot say, therefore, that a dipole has any gain, since the maximum would be a gain of one. *At frequencies other than its best frequency, the dipole gain is less than one.*

Summary of Dipole Characteristics. – While a dipole is the simplest antenna, it has limited use. First of all, it has no gain. In general, it can seldom be used at distances greater than about 15 miles from the transmitter. However, this distance may vary with the local terrain and no flat statement can be made to cover all cases. Another limitation is to be found in the shape of its directional response pattern. As previously discussed, the dipole receives equally well from either the front or rear. In many instances, this characteristic of receiving signals from the front and back results in multiple path reception that produces a ghost in the picture. We'll go into this in a little more detail as soon as we explain another type of dipole antenna.

The Folded Dipole. – The folded dipole is illustrated in Fig. 6-12.

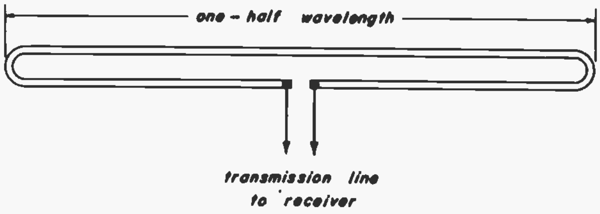

Fig. 6-12

The overall physical length is approximately one-half wavelength at the resonant frequency. (It is slightly shorter than the theoretical length, due to end effect.) This antenna is called a *folded dipole* because it is almost two dipole lengths folded back upon itself. The spacing between the two rods is always a very small part of a wavelength, and may be 1½ to 3 inches. Of course, for the parallel wire folded dipole this spacing is only 0.3 inches, the width of the line.

The folded dipole can be constructed from a piece of twin lead transmission line to serve as a convenient indoor antenna. Just cut a length of transmission line a little shorter than a half-wave, short the ends and open one conductor at the center for the connection to the receiver. The antenna is shown in Fig. 6-13.

The amount of pickup from a folded dipole is about the same as from a simple dipole of the same overall length. When used with 300-ohm transmission line the bandwidth is somewhat poorer than that of a simple dipole.

An important characteristic of the folded dipole is that it has a characteristic impedance of 300 ohms. Parallel wire transmission line also has a characteristic impedance of 300 ohms. With the 300 ohm line connected to the 300 ohm folded dipole, we have a higher voltage delivered to the receiver than would be the case with a simple dipole.

This characteristic makes the folded dipole a good antenna in fringe areas where only one station is to be received, or to boost the response for one particularly weak station. But because of the relatively narrow bandwidth of the folded dipole as compared with the simple dipole, and the fact that it picks up no more signal than the simple dipole, the folded dipole is not the answer to all fringe area problems.

The directional response is the same as for the simple dipole previously described. It re-

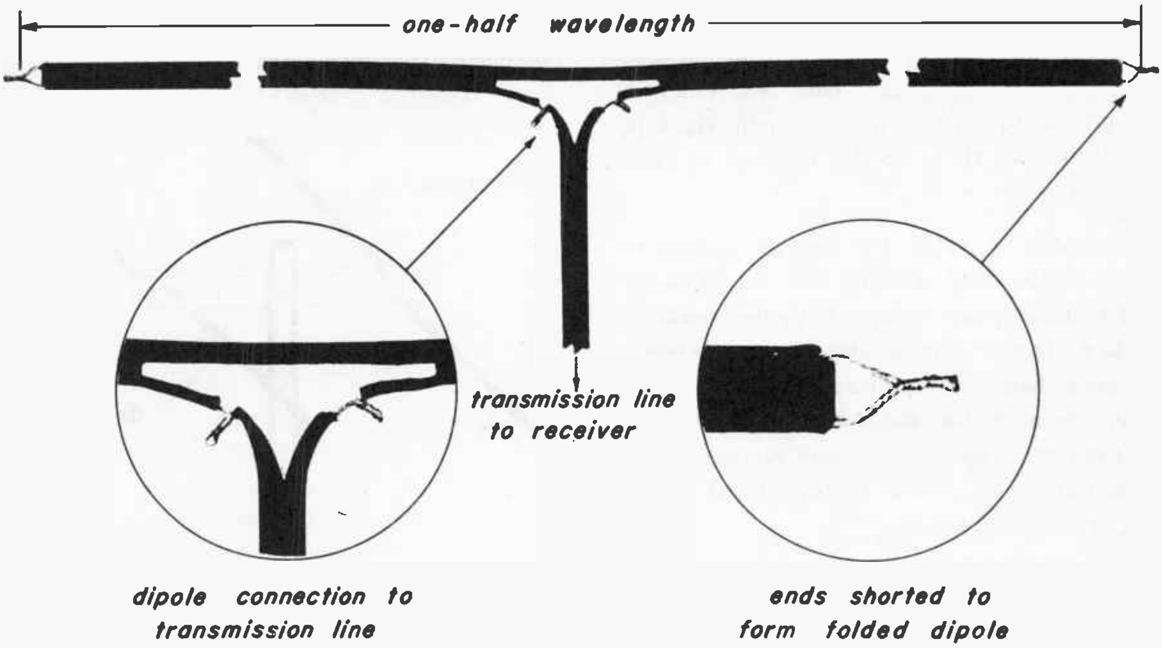

Fig. 6-13

ceives equally well from front and back and, therefore, is subject to ghost interference due to reflections from the rear.

Multiple Path Reflections. – A way in which the dipole antenna can receive a picture signal over two different paths is shown here:

In this figure we can see that it is possible for the receiving antenna to pick up the signal from the front and rear of the antenna. This in itself is not as serious as the fact that the signal being received from the rear is traveling a longer distance (A to B to C) than the direct signal (A to C). The signal that bounces off the

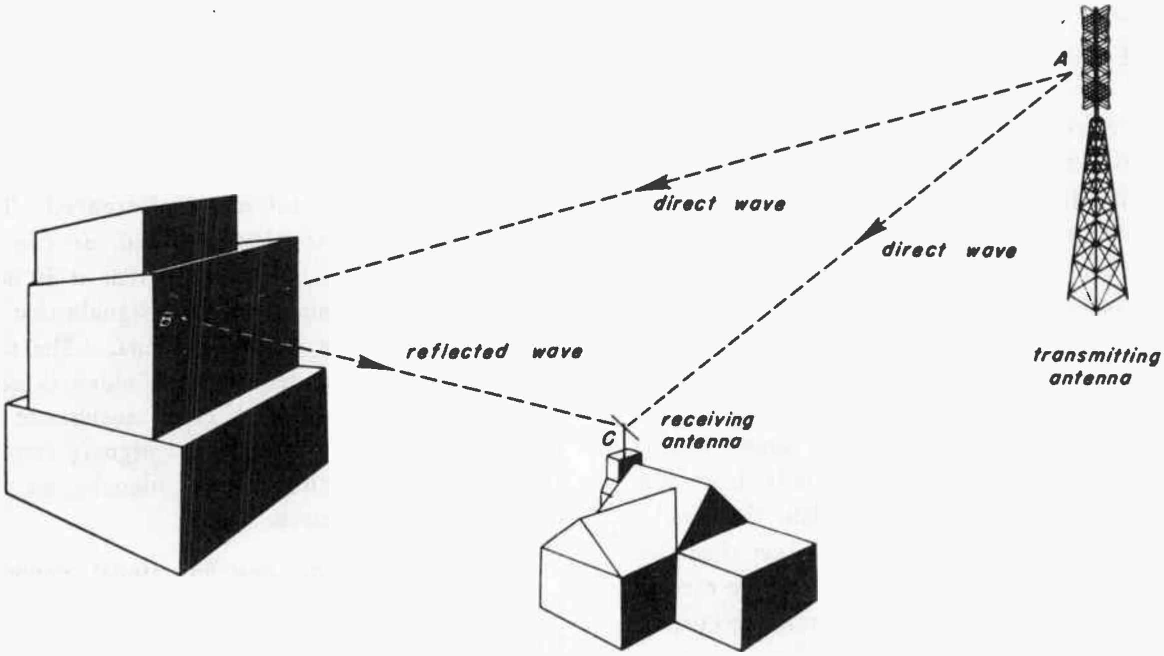

Fig. 6-14

building and is returned to the antenna from the rear, arrives *later* than the direct signal because of the increased distance. This will cause a second picture to appear on the screen, which is displaced to the right of the original picture, producing a ghost image.

The amount by which the second picture is displaced to the right increases as the distance A to B to C becomes greater than the distance from A to C. However, if the distance is only about 50 feet more than the distance A to C, the amount of displacement of the ghost will be very slight and will not show up as a separate picture at all. But this may cause a loss of fine detail in the picture, or distorted sound.

Any such ghost in the picture will prove extremely annoying to the viewer. In order to reduce it, we must provide an antenna that can discriminate against reception from the rear. A simple dipole cannot do this and, therefore, will prove unsatisfactory under such conditions.

A dipole is useful only fairly close to the transmitter and only in the absence of reflections. At locations approximately midway between two stations on the same or adjacent channels, there will be an additional problem of interference because the dipole receives equally well from the front or back.

DIPOLE WITH REFLECTOR

6-8. According to our earlier discussion, the dipole has two major shortcomings in gain and directivity. In order to improve the characteristics of the antenna in these respects it is possible to add another element called a reflector. Addition of the reflector will increase the gain of the antenna, and improve its directional properties. It also has an effect upon the bandwidth.

Assembly. – This assembly consists of a standard dipole antenna as previously described, a reflector rod slightly longer than the dipole, and a cross arm which must be longer than that used with the dipole alone. There are no electrical connections made to the reflector, the customary transmission line connections being made to the dipole. The reflector rod may actually be in sections but joined electrically at the center so as to act as one continuous rod. A sketch of this assembly is shown here:

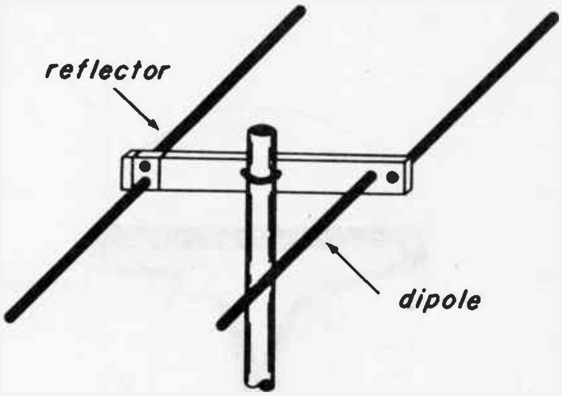

Fig. 6-15

You can see that the reflector is mounted behind the dipole and parallel to it. The spacing between the dipole and reflector is usually a little less than half the length of the dipole. The reason for this spacing will be discussed later. As in the case of the simple dipole, the unit may be made of separate rods assembled with washers, nuts and bolts upon a separate cross arm, or it may be made up as a folded compact unit, which just has to be opened up and locked into place by wing nuts or bolts.

Directional Response. – The addition of the reflector has a pronounced effect upon the directional response of the dipole, as illustrated in Fig. 6-16.

Pickup from the front is increased at the same time that pickup from the rear is decreased. The directional pattern is also narrowed, as can be seen in the figure. This means that it is now more able to discriminate against signals that do not arrive broadside to the antenna. The fact that pickup from the rear and the sides is considerably decreased is of great assistance in reducing the effects of reflected signals coming in from these directions. Such signals, as you know, may cause ghosts.

The reason for this new directional response is the addition of the reflector, and we shall now try to see in a simplified way how this comes about.

As you can see in the sketch Fig. 6-15, the

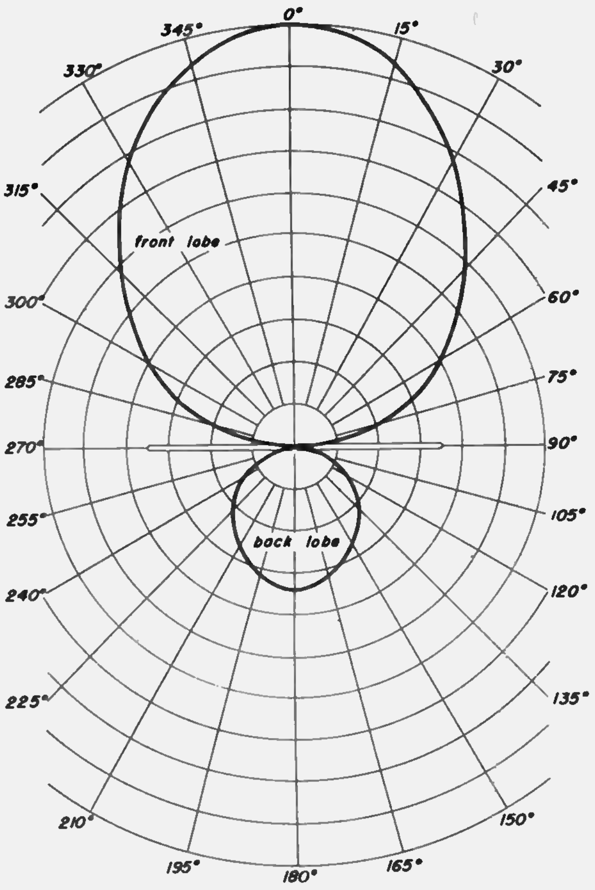

Fig. 6-16

reflector is placed to the rear of the dipole with respect to the transmitting station. Waves arriving from the transmitter will first come to the dipole. Here they will induce currents in the dipole and send a signal down the transmission line to the receiver. However, when currents flow in the dipole they cause it to act as a secondary transmitter, and it also radiates waves of its own. These new radiated waves travel to the reflector (and in other directions) and induce currents in the reflector, *in addition to* the currents induced in it by the transmitter. So now, the reflector too acts as another transmitter, radiating waves of its own *back to the dipole* (as well as in other directions). If the length of the reflector is correct and its spacing from the antenna dipole is proper, the waves coming back to the dipole from the reflector will be such that they will *aid* the original signal coming to the dipole from the transmitter. The result is that a stronger signal will be sent to the receiver than if a dipole were used alone without a reflector, since energy which would otherwise have been wasted by radiation is used to produce more signal in the antenna.

There is another point to consider in the improved pickup from the front. Some of the waves arriving from the transmitter miss the dipole entirely but manage to reach the reflector. Such waves also induce currents in the reflector of such nature that the reflector again radiates waves back to the dipole and further reinforces the signal going to the receiver. Thus the total dipole pickup is considerably improved from the front.

Now consider what happens to waves arriving from the rear. These will of course strike the *reflector* first, and the dipole second. When the waves strike the reflector, currents are induced in it and the reflector radiates waves to the dipole. These radiated waves arrive at the dipole at the same time that reflected waves from the rear which do not intercept the reflector also arrive at the dipole. These two sets of waves arrive in such fashion that they tend to cancel each other at the dipole, thereby *reducing* the total pickup from the rear. The pickup from the rear is not cancelled out completely but may often be reduced to such a value as to make its effects negligible in the receiver.

Front to Back Ratio. – It is useful, when discussing complex antennas such as this one, to speak of the so-called *front to back ratio.* This ratio is simply an indication of how much more effective the antenna system is in receiving signals from the front than from the back. For example, suppose that in a certain location the signal arrives at the antenna with equal strength from both the front and rear. Let us further suppose that the antenna operates so as to deliver twice as much signal to the receiver from frontward signals as from rearward signals. We would then state that this antenna has a front-to-back ratio of two to one. This, incidentally, is about the ratio to be expected in the dipole and reflector combination we are discussing, near its resonant frequency.

Bandwidth. – The bandwidth of a dipole and reflector is determined to a large extent by the spacing between the two elements. In general, the closer the spacing, the less the bandwidth.

If the spacing is made too close, the bandwidth may be seriously restricted. In television antennas, a spacing in the order of one-quarter wavelength is used. This has a negligible effect on the bandwidth of the antenna. With this spacing, the bandwidth of a dipole and reflector compares favorably with that of a simple dipole alone.

Gain. – A dipole and reflector has a gain over a simple dipole. The exact amount of gain is a function of the spacing between dipole and reflector. The closer the spacing (within limits), the greater the gain. However, as we said before, closer spacings reduce the bandwidth and a compromise must be reached between bandwidth and gain. With the usual spacings in television antennas, the actual gain varies for different channels. For example, on Channel 3, we might get a gain in pickup of about 1.6, providing 60% more signal than a dipole, while at Channel 6 the gain might be only 1.25. In general, the gain is good over all channels and the performance is superior to that of a dipole alone.

When to Use. – The dipole and reflector has two distinct advantages over the simple dipole:

1. Improved directivity (front-to-back ratio).
2. Improved gain.

Both of these advantages suggest the possibilities for the use of a dipole and reflector antenna. It can be used at greater distances from the transmitter than the simple dipole. For average roof top elevations, satisfactory reception may be had at distances up to about 25 miles. For higher antenna elevations, greater distances may be obtained.

The rejection of rearward arriving signals makes it possible to reduce ghost reception in many cases, thus improving the quality of reception.

In general, we may say that the dipole and reflector has improved directivity and gain characteristics over a simple dipole. However, the assembly still has one rather serious disadvantage of the dipole. That is, at the high frequency channels, the pattern splits up into multiple parts instead of only two. For example, at Channel 7 it looks like this:

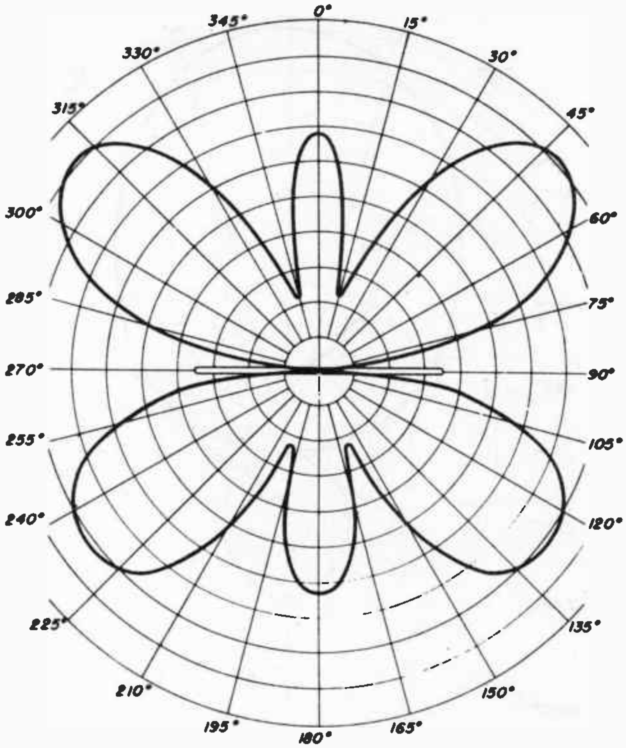

Fig. 6-17

And at Channel 11 it looks like this:

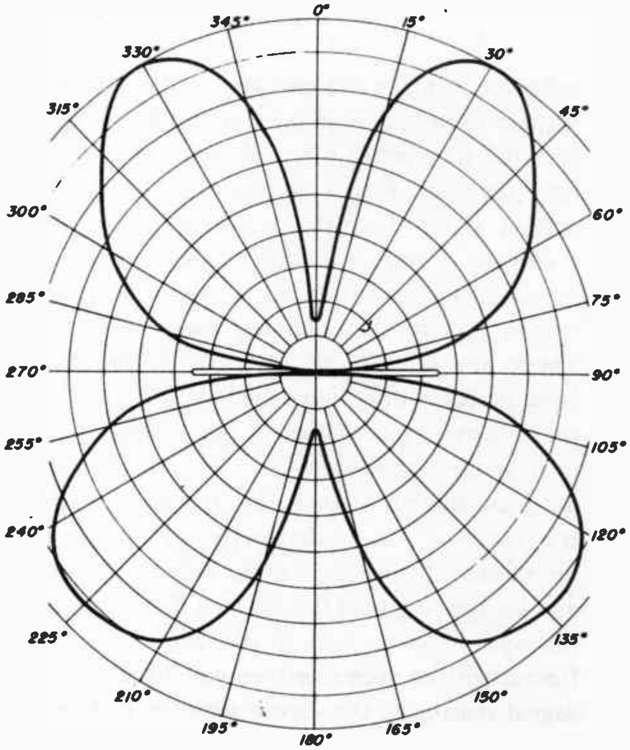

Fig. 6-18

These changes in directivity pattern make it very difficult to receive all of the channels from a given direction with acceptable signal strength.

HIGH FREQUENCY ANTENNA ATTACHMENTS

6-9. We have just seen that the addition of a reflector gives us gain and improved directional response. However, the reflector does not cure the splitting up of the antenna pattern. We have a means of preventing this pattern splitting, by the addition to the dipole of so called *loading wings*. Adding a high frequency reflector to the low-band antenna is another method of improving its response for the high channels.

Wings. – The assembly of the dipole with loading wings is identical to the original assembly of the dipole except for the addition of the wings. Each of these wings consists of two rods, arranged to form a "V", and fastened to the dipole proper. There are two wings for each dipole as shown here:

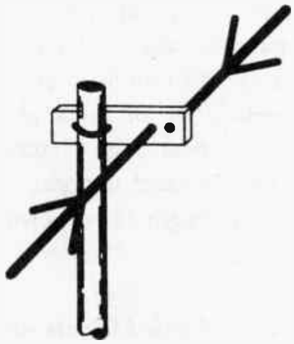

Fig. 6-19

The "V's" are constructed of 3/16th inch rods, each about 16 inches long, fastened together at one end and clamped to the dipole. The clamped end is fastened to the dipole at a point about 9 inches from the cross arm. (These dimensions are for one particular antenna, and may vary somewhat for other types.)

Loading wings are very useful when the high-band and low-band stations are in the same direction. Before the development of the wings, it was often necessary in a case like this either to use a separate high-frequency antenna, or to reorient the low-frequency dipole. The latter expedient, of course, improved the high channel reception only at the expense of the low-frequency channels.

Addition of the wings causes a change in the antenna currents at high frequencies so that the directional pattern of the antenna does not split at the high channels, but remains substantially as a single front lobe and a single back lobe, as shown in Fig. 6-20.

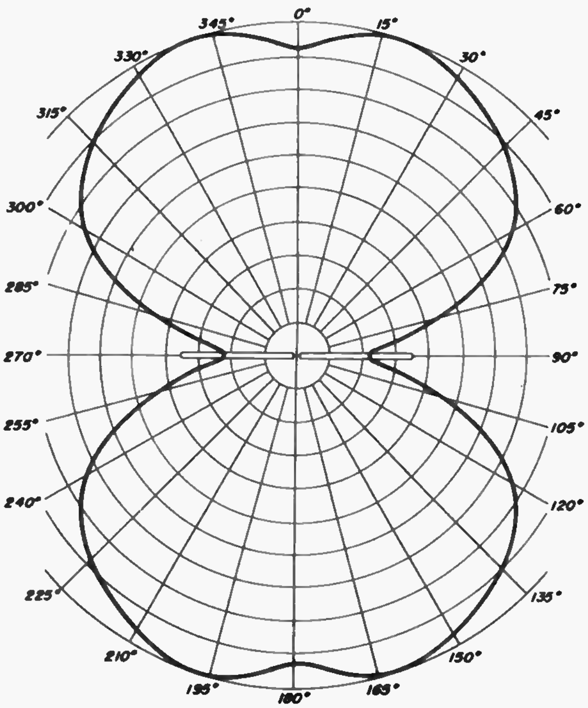

Fig. 6-20

Thus the direction of best pickup remains broadside to the antenna for all channels. This makes it possible to use a single antenna system on all channels with good results up to 25 — 30 miles from the transmitter. The antenna is simply oriented broadside to the general direction of the transmitting stations desired, all stations being received in this one orientation.

The low frequency channel response is unaffected by the addition of wings. All other characteristics, such as gain, front-to-back ratio and bandwidth remain substantially the same as without wings.

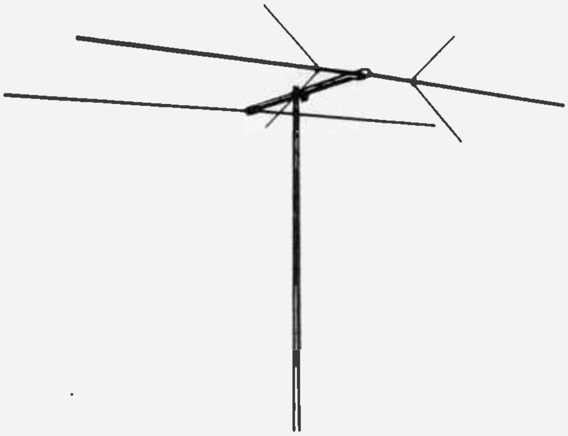

Fig. 6-21

A dipole with wings may be used in combination with a low-frequency reflector, as previously described. This is shown in Fig. 6-21. The action of the reflector remains as before on the low channels. For the high band channels, however, the antenna operates as a simple dipole, because the low frequency reflector does not have the correct spacing for a good front-to-back ratio at the high frequencies. The pattern does not split up on the high channels, however, thereby simplifying orientation and improving the effectiveness of the antenna system.

High Frequency Reflector. – The high frequency reflector consists of a rod about 33 inches long mounted approximately 14 inches behind the dipole. (These dimensions may vary somewhat with different antennas.) The assembly looks like this:

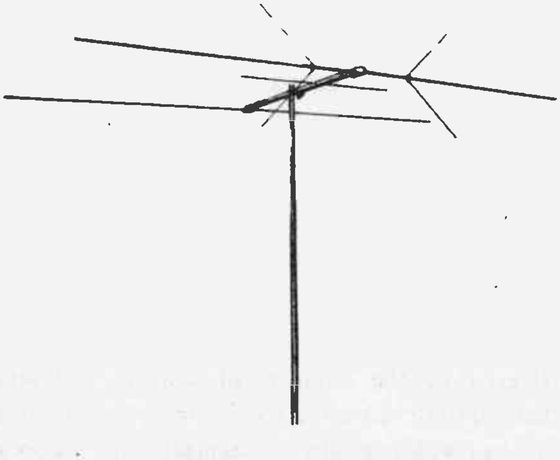

Fig. 6-22

We can see from the figure that the high frequency reflector is used in conjunction with a low frequency reflector, the action and characteristics of which we previously described. The high frequency reflector has no electrical connection to either the dipole or the low frequency reflector but receives its energy due to the induced currents in it.

The addition of the high frequency reflector has no effect upon the operation of the antenna assembly at the low channels. It does, however, provide slightly more gain on the high channels than can be obtained with a low frequency reflector. In addition, an improved front-to-back ratio at the high channels is obtained. This ratio, using the high frequency reflector, is about 2 to 1 as compared to about a 1 to 1 ratio at the high channels without the use of the high frequency reflector. This means that when using a dipole and low frequency reflector alone, there is practically no discrimination at the high channels against receiving signals from the rear. This of course may result in ghosts.

The addition of a high frequency reflector greatly reduces reception from the rear on the high band channels and reduces the possibility of ghosts. It should therefore be used whenever there is a probability of such ghost reception. The increased gain at high channels also indicates that it may be used in areas where the high channel signal strength is somewhat lower than might be desired.

High Frequency Folded Dipole and Reflector. – In certain areas, where only high band television channels are broadcasting, it is possible to use a high frequency folded dipole with folded reflector. In practice, this antenna is simply the top section of the high-low combination shown in Fig. 6-23. The performance of this antenna on the high band channels is very similar to that of the low frequency dipole and reflector operating for low band channels, as previously explained.

The reflector used with the high frequency folded dipole is also folded, as can be seen in Fig. 6-23. The reason for using a folded reflector is that it provides greater mechanical rigidity for a given diameter rod. The electrical characteristics of a folded reflector are about the same as for a single rod reflector. The folded reflector will be slightly shorter due to increased end effect. On some antennas the folded dipole is 29 inches long, the folded reflector is 31½ inches long and the spacing between the two is about 13 inches. These dimensions may vary with different types.

HIGH-LOW ANTENNA COMBINATION

6-10. In the preceeding section, we discussed the advantages of adding high frequency wings and high frequency reflectors. The reason for doing this is to improve the high frequency response of the antenna in regard to gain and directional response. As we noted, the average maximum distance from the transmitter for the previously discussed antennas is about 25 to 30 miles. This distance is limited to a greater extent by the high channel reception (because the higher frequencies become weaker before the lower frequencies) than by low channel reception. Therefore, if we could increase the gain of the antenna system on the high channels, without worrying too much at the moment about the low channels, the maximum usable distance of the antenna could be somewhat increased.

Another problem may exist which we have not heretofore discussed. That is the possibility of the *high frequency* stations in some areas being situated in a radically different direction from the low channel stations. This situation requires the use of the so called "piggy-back" arrangement which permits one portion of the antenna to be oriented independently of the other portion. Another advantage of separate orientation is the possibility of minimizing ghosts due to reflections.

The high-low antenna illustrated in Fig. 6-23 fulfills both of the above requirements by providing: (1) increased gain at the high channels and (2) independent orientation for high and low frequency channels.

Assembly of the High-Low Combination. – The assembly consists of three basic units:

1. A low frequency dipole and reflector identical to that previously described.
2. A high frequency folded dipole and reflector.
3. A so called "phasing harness" or antenna coupler, to connect the two antennas to one transmission line.

Fig. 6-23

A close up view of the assembly is shown in Fig. 6-24, on the following page.

The high frequency folded dipole and reflector is located at the top of the mast. The low frequency dipole and reflector is situated about 33 inches lower. Both antennas can be individually oriented, and then fastened, in any desired direction.

The Phasing Harness. – The phasing harness is made up of three sections of transmission line and a junction terminal block (or splice). The three sections consist of 12 inch, 37½ inch and 12½ inch lengths, as shown in the close-up view of the combination.

The high frequency folded dipole is connected to the junction block (or splice) by the 12 inch section. The low frequency dipole is connected to the junction block (or splice) by the 37½ inch section. The 12½ inch section is also connected to the low frequency dipole at one end, but the other end of this section does not connect to anything. The reason for this is to prevent high channel stations from affecting the low frequency antenna. The phasing harness makes it possible to connect both antennas (high and low frequency) to a single transmission line, so that each acts independently, without interfering with the other.

Directional Response of the High-Low Antenna. – The directional response at the low fre-

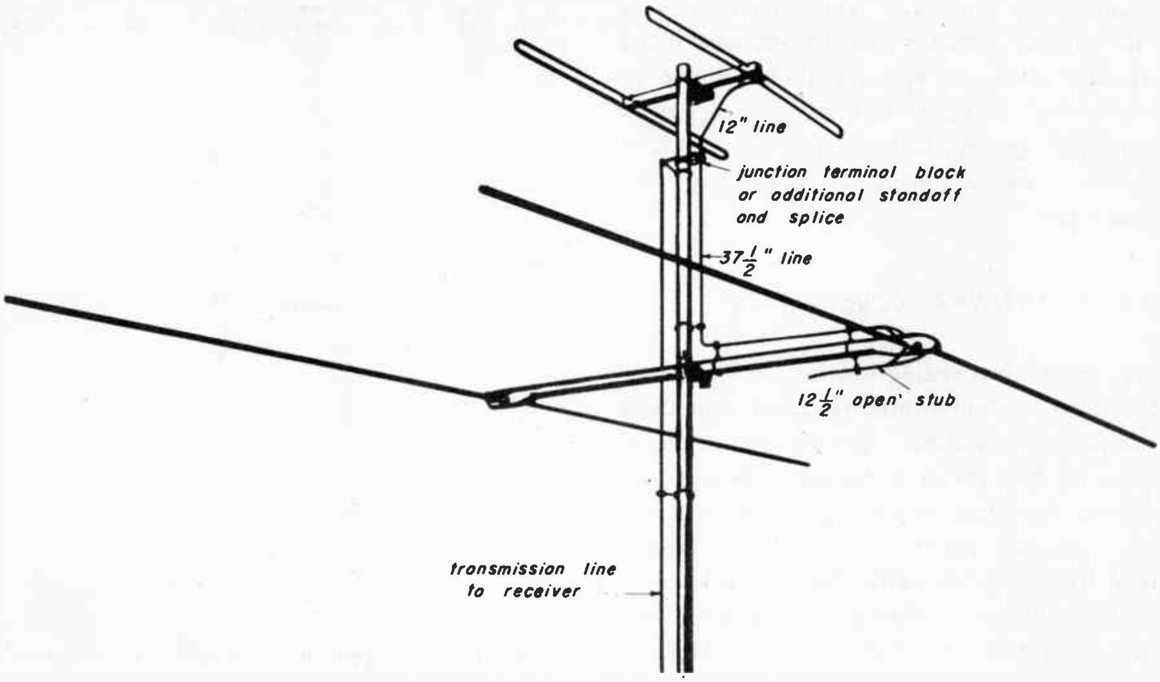

Fig. 6-24

quency channels is basically the same as that of the low frequency dipole and reflector. This has been discussed in a preceeding section. The directional response at the high frequency channels is very similar to that of the dipole and reflector with wings and high frequency reflector, as previously discussed. However, the directivity pattern of the high-low antenna at the high channels is somewhat sharper than the preceeding antennas, and this makes the orientation of the high frequency section somewhat more critical than before.

Gain of the High-Low Combination. – The gain of the antenna system at the low channels is about the same as that of the low frequency dipole and reflector. This has already been discussed. Actually there is a slight loss of gain due to the effects of the high frequency section, but this is very small and of little or no consequence.

On the high frequency channels, the pick-up of the high-low antennas is considerably greater than that of the previously discussed antennas. The exact gain varies somewhat with frequency, but on the average, the pick-up at high channels is about 1.8 times that of the low frequency dipole and reflector with wings and high frequency reflector. The bandwidth is about the same.

When to Use the High-Low Combination. – The greater gain at high frequency channels makes it possible to use the high-low antennas at greater distances than previously discussed, types. The individual orientation of the two sections indicates its use under conditions when the high frequency stations are in a different direction from the low frequency stations. This individual orientation also makes it possible to reduce the effect of ghosts due to reflections, *provided* that such reflections do not arrive from the same direction as the direct wave from the transmitter. If this is the case, there is little, if anything, that can be done to remove the ghost, except to tear down the building causing the reflection. Fig. 6-25 shows why such ghosts cannot be eliminated easily.

We can see from this illustration that if the reflecting object is in the same direction as the transmitter, the reflected signal will arrive at the receiver at almost the same angle as the direct signal. If this is the case, it is improbable that any amount of antenna orientation will remove the ghost.

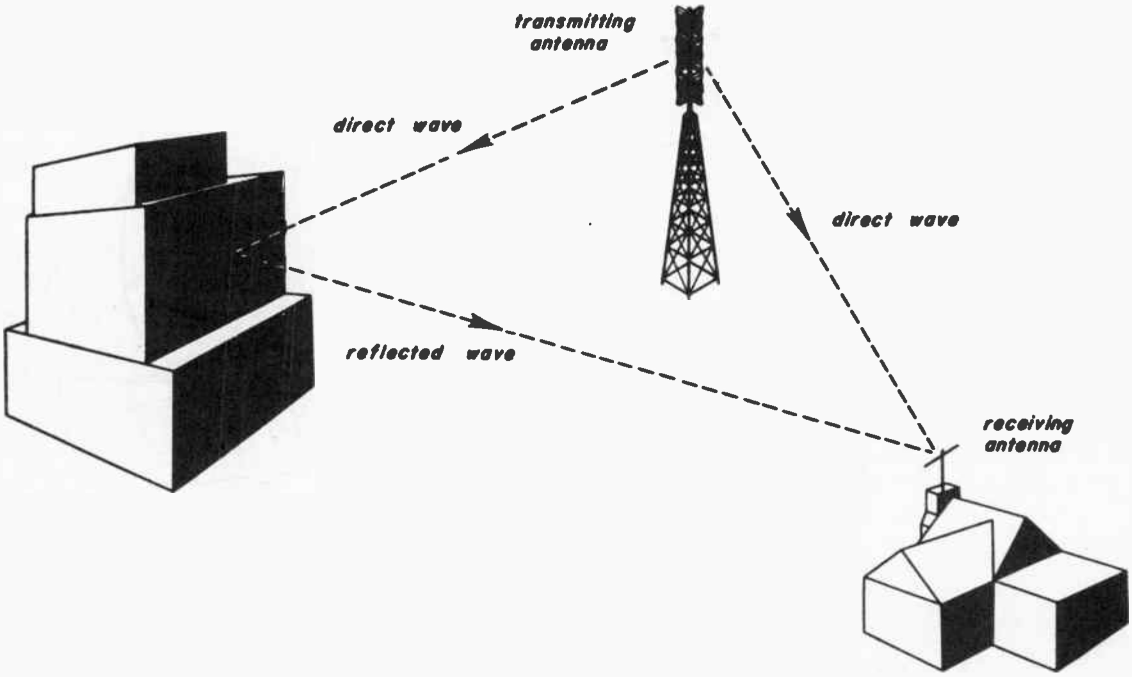

Fig. 6-25

STACKED ARRAYS

6-11. In the case of the antennas we have been discussing, the average maximum usable distance from the transmitter is 30 to possibly 40 miles, depending upon the terrain and the height of both the transmitting and receiving antennas. Beyond this range, or in areas of weak signal due to unusual terrain, an antenna with greater gain than normal is needed to supply sufficient signal to the receiver.

This added gain is usually obtained by the use of *stacked arrays*. The term "stacked" means simply that the antenna elements are mounted one above the other. The term "array" refers to a combination of antennas or antenna elements so arranged that they act in conjunction with each other – not independently, as in the case of the high-low antenna previously described. The elements are so chosen and spaced that they reinforce each other for certain frequencies and from certain directions, in the desired manner.

Stacked Amphenol Antenna. – One of the antenna arrays used in installations for fringe area reception is the Stacked Amphenol. This antenna gives good results by providing high gain, proper bandwidth, and good front-to-back ratio on all channels.

Assembly. – A single unit Amphenol antenna is shown in Fig. 6-26 (a) and the double unit stacked array is shown in Fig. 6-26 (b).

Fig. 6-26 (a)

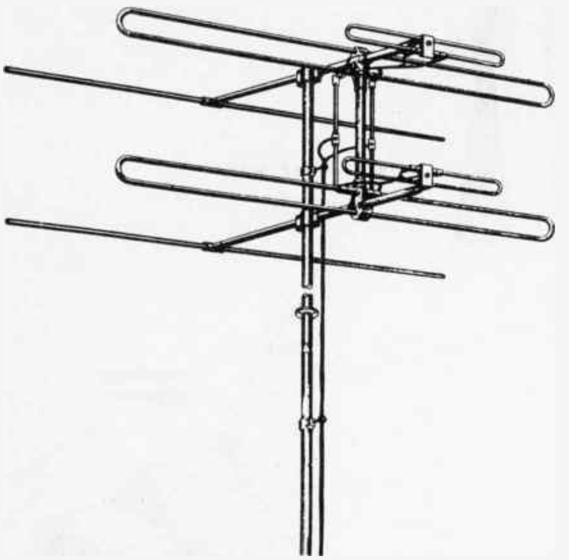

Fig. 6-26 (b)

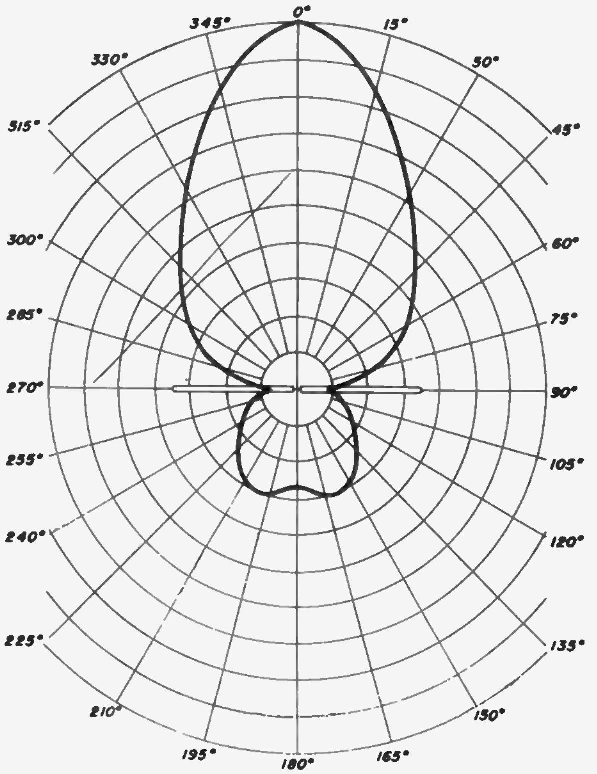

Fig. 6-27

Let us examine Fig. 6-26 (a) first. Here we can see that the antenna consists of three elements: (1) a short high-channel folded dipole about 29 inches in length, in front; (2) a longer low-channel folded dipole, about 79 inches long, and mounted about 14 inches back of the high band element; and (3) at the extreme rear, a still longer low-channel reflector, about 110 inches in length, located about 39 inches behind the low-channel folded dipole. The stacked array consists of two of these units, one above the other, as shown in Fig. 6-26 (b). In addition, a suitable phasing harness is provided to connect the folded dipoles together and to a single common transmission line. As far as we are concerned, we only use the Amphenol in the stacked form as an antenna for fringe areas.

Directional Response. – In general, the directional response is somewhat sharper than that of the antennas previously discussed. This calls for *much more critical orientation* for best signal. The sharpness of the pattern remains about the same for all channels. The pattern for Channel 2 is shown in Fig. 6-27.

We can easily see from this pattern the sharpness of the directional response and the good front-to-back ratio at this channel. The front-to-back ratio here is a little better than 3 to 1. The general shape of the pattern and the front-to-back ratio remains substantially constant on all channels, although the gain varies somewhat.

Gain. – The gain is comparable with that of a low frequency dipole and reflector with wings and high frequency reflector. On the low frequency channels, the gain of the Amphenol is about 1.6, the same as that of a low frequency dipole with reflector. The Amphenol is slightly inferior at Channel 5. However, the gain of the Amphenol antenna is considerably better on the high frequency channels, as compared with the dipole with wings and low and high frequency reflectors. The exact amount differs for the various channels and a few comparisons are as follows: On Channel 7 the gain is a little better than 2. On Channel 11 the gain is better than 4, and on Channel 13 the gain drops again to a little better than 2. This increased gain at the high channels is particularly important, because as we mentioned, the high channel signals are usually weaker than the low channel signals.

Bandwidth. – The bandwidth at the low channels is similar to that of the low frequency dipole with reflector and wings and high frequency reflector, and is adequate to cover these channels properly. At the high channels, the bandwidth is superior, the response being much more even, thus providing excellent reception at the high channels.

When to Use. – From what we have said, it is obvious that the stacked Amphenol has excellent response at the high channels. Since these channels become weaker at shorter distances from the transmitter than the low channels, we can use this antenna at somewhat greater distances from the transmitter than any of the antennas previously discussed. The sharp directional pattern should be of assistance in reducing the effects of ghosts due to building reflections.

However, if the stations are not all in the same general direction, some will not be picked up. The two sections cannot be individually oriented and another type of antenna, such as the high-low combination, is indicated for use under such conditions.

Stacked Telrex. – Another type of stacked antenna available is the Telrex antenna. This is also a good antenna to use in weak signal areas because of its excellent response on both high and low bands.

Assembly. – Fig. 6-28a, front view, and Fig. 6-28b, top view, of a single conical dipole and reflector unit are shown first for clarity.

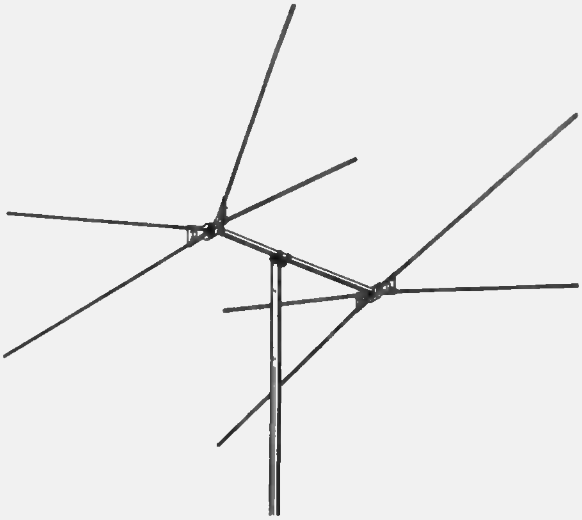

Fig. 6-28 (a)

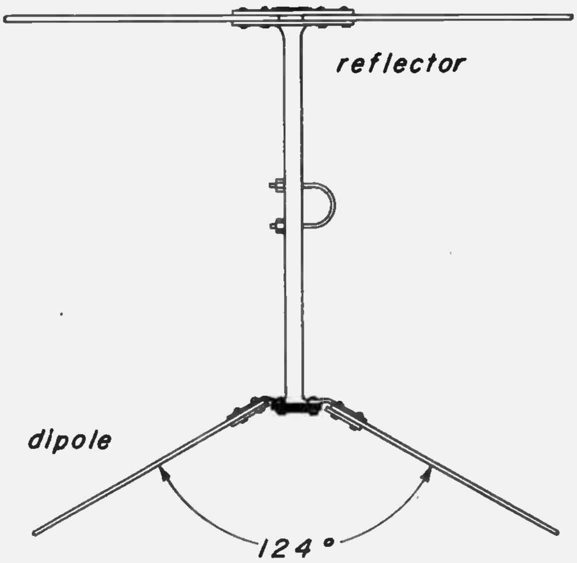

Fig. 6-28 (b)

From the front view, we can see that instead of a single rod, each half of the dipole consist of two rods which are joined at the center to form a V. The two halves of the dipole are insulated from each other (but not the reflectors), and transmission line connections are made at the center, as shown. Each rod is about 45 inches long. The two halves of the dipole do not run in the same vertical plane, but form an angle of about 124°, as shown in the top view. The reflector does not have such a bend, but is straight across.

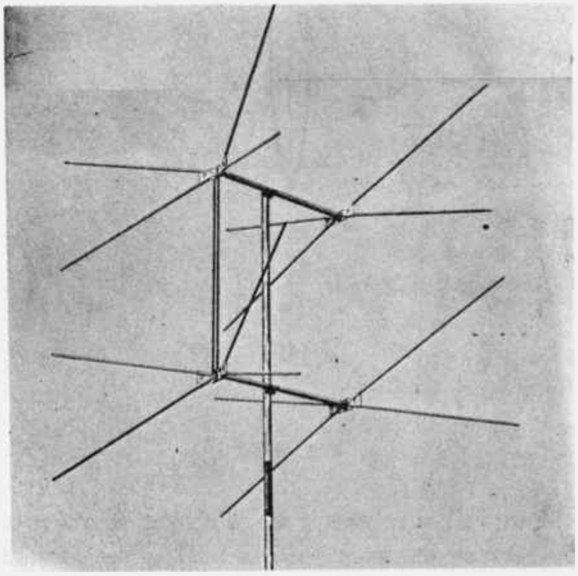

Fig. 6-29

The complete stacked array is shown in Fig. 6-29 on the preceeding page.

It is seen to consist of two dipoles stacked one above the other at a distance of about 43 inches. Each reflector is located about 51 inches behind its dipole. A phasing harness connects the two dipoles to the transmission line. The reflectors are not electrically connected to anything.

Directional Response. – The directional pattern of the stacked Telrex is very similar to that of the stacked Amphenol, both as to shape and front-to-back ratio on most channels. However, splitting of the directional pattern *does* occur to some extent on the very high channels, but this usually is not too serious. The pattern for Channel 11 is like this:

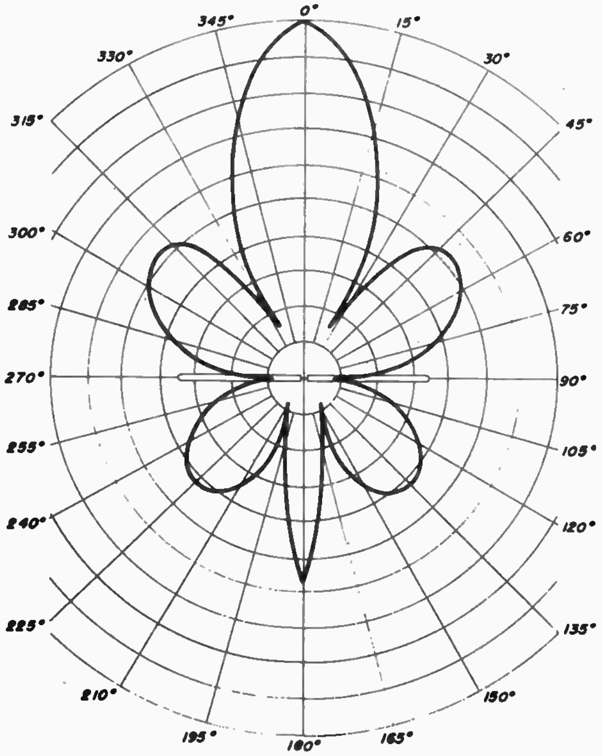

Fig. 6-30

You will note that even with the splitting of the pattern, the main lobe is still in the forward direction and the front-to-back ratio is still better than 2 to 1. Thus, the reception is relatively unaffected.

Gain. – In general, the gain of the stacked Telrex is superior to that of the stacked Amphenol. Exceptions to this occur at Channels 2 and 13. The most noticeable reduction occurs at Channel 13, where the gain of the Amphenol is nearly twice as good as that of the Telrex. On all other channels, the Telrex gain exceeds that of the Amphenol by amounts varying from about 1.6 to over 3.

Bandwidth. – On the low channels, the bandwidth is similar to that of the Amphenol and provides good coverage. On the high channels, the response around Channel 13 falls rather badly and we might suspect that if Channel 13 is coming in weak at a particular location, this response may prove detrimental to reception. Aside from Channel 13, however, the bandwidth is sufficiently broad to cover all channels properly.

When to Use. – In general, the stacked Telrex provides superior gain to all other types, except for Channel 13.

In areas where Channel 13 does not transmit, this is not a problem, and the Telrex can be used at still greater distances than the Amphenol antenna. However, if it is necessary to favor Channel 13 over the other high frequency channels, then the Amphenol would be preferable.

The Telrex also has the same disadvantage as the Amphenol in that the individual sections cannot be separately oriented, as can the high-low antenna.

INDOOR ANTENNAS

6-12. It is not always possible, or even desirable, to erect any sort of roof antenna. This may be due to difficulty in obtaining the landlord's permission. Or it may be desired to set up a portable receiver, or a demonstration receiver. In such cases, some form of indoor antenna must be used.

Several types are available, including the internal antennas now being built into the cabinets of most TV receivers. Since this is perhaps the simplest type, we shall discuss it first.

Built-In Antenna. – Built-in antennas are now furnished with many television receivers except those with metal cabinets.

One of the common types of built-in antenna is made of a length of parallel wire transmission line 70 inches long and connected as a folded dipole. The lead-in from the folded dipole will consist of a length of twin lead line, either 15 or 30 inches long.

The different lengths will be used in different models, depending upon the mechanical layout of the receiver. In receivers using wooden cabinets, the part of the antenna with the lead-in is tacked on the underside of the top back center of the cabinet. When the tacking is done, care is taken not to short the two antenna leads. The two ends of the antenna are then run along the underside to the sides, along the sides and down the inside front of the cabinet. A typical installation is shown here:

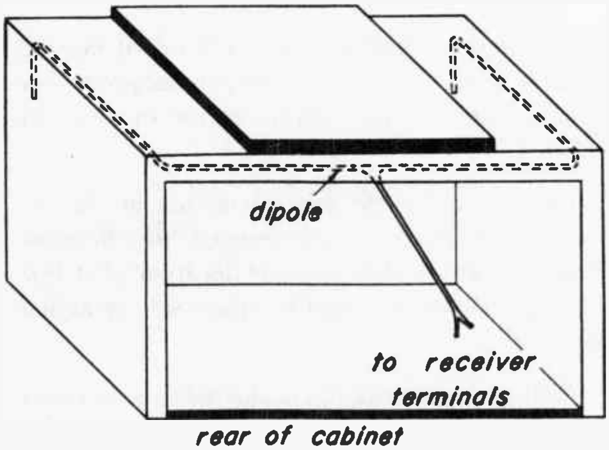

Fig. 6-31

In the case of receivers using metal cabinets, the built-in antenna cannot be installed inside of the cabinet due to its shielding effect. In this case, the antenna is built into the wooden stands made for these sets. An illustration showing the installation in the stand is shown in Fig. 6-32.

As we see in the drawing, the center of the antenna (folded dipole) is located at the middle of the cross brace arm and is marked "A". The lead-in follows line A-B-C. One end of the antenna follows the line A-D-E-F, and the other end follows line A-G-H-I. The legs are slotted to accommodate the line so that it is practically invisible from any normal viewing angle.

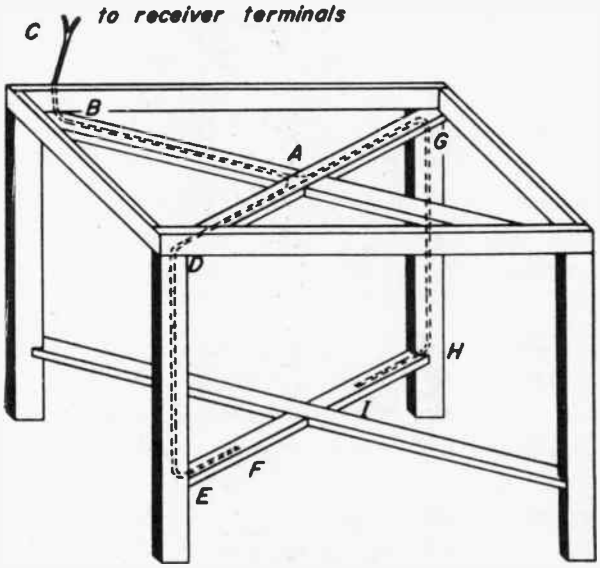

Fig. 6-32

When to Use the Internal Antenna. – The built-in antenna is being installed in receivers on the assumption that there may be some locations in which it will give satisfactory performance. It should be realized that such an antenna is definitely inferior to all outdoor antennas. As a matter of fact, a tag may be attached to the lead-in of the built-in antenna which definitely states that there is no guaranty that it will work. The customer may try it out, and possibly shift the set around a bit to improve reception. However, if it does not prove satisfactory, another type of antenna must be used.

V-Type Indoor Antennas. – An indoor antenna more efficient than the built-in type is a portable V Antenna, such as the one shown in Fig. 6-33.

You can see that this antenna consists of a base upon which are mounted two telescoping rods. Each rod consists of three telescoping sections, the largest (at the bottom) section being 7/32 inch in diameter. The length can be varied from a minimum of about 26 inches to a maximum of about 45 inches. The rods are constructed of chrome plated brass. Each rod represents one half of a dipole.

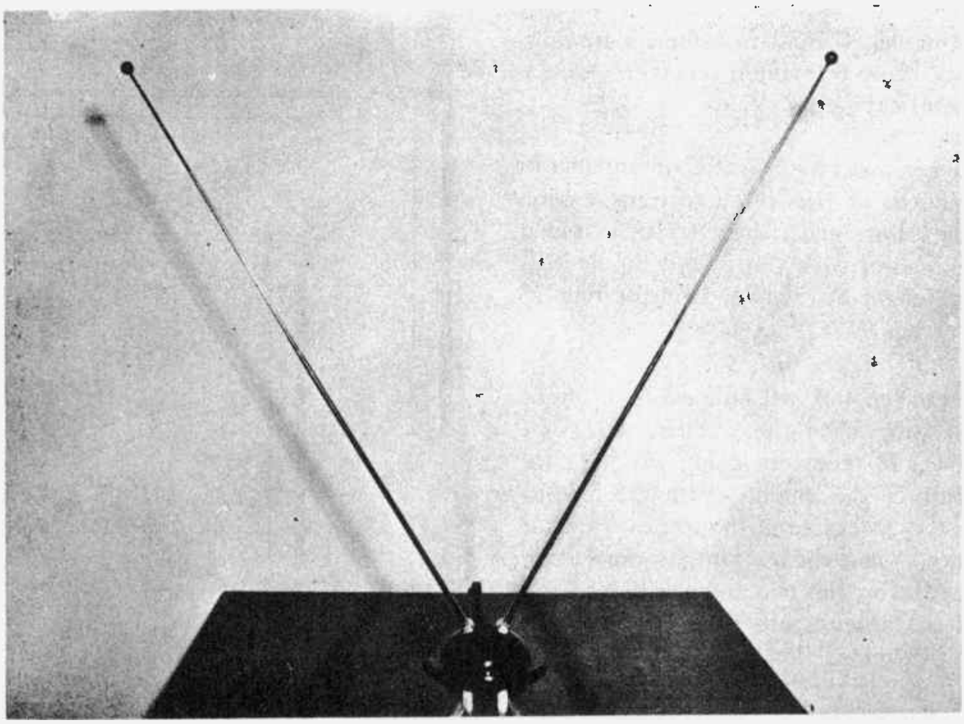

Fig. 6-33

The rods are mounted on a swivel base which permits swinging them through all angles from vertical to horizontal.

The base is about 5 inches in diameter and is constructed of high gloss Tenite in a chocolate marble design. The rod swivels are spring (cushion) mounted into the base to reduce the possibility of breakage due to pressure of mounting and swiveling.

The transmission line connects to each rod swivel through the bottom of the base where it is soldered to the terminals. A 5 foot length of 300 ohm line is provided with spade terminals to connect to the receiver. The line is brought out of the base through a slot at one side.

When to Use. – The V-type antenna may prove satisfactory when a roof antenna cannot be erected, and when a built-in antenna is not satisfactory. In strong signal areas, the indoor V antenna may provide good reception even though an outdoor installation is feasible. Under these conditions, the decision between the indoor and outdoor antenna must be made in accordance with the considerations outlined in Lesson 3.

The V-type indoor antenna is usually placed on top of the television cabinet where it may be rotated, swiveled up and down and lengthened or shortened to provide best reception for a given channel.

The length, angle and orientation of the antenna may have to be changed for different channels, and a difference of location of a few feet may sometimes increase the receiver signal appreciably.

While this antenna is considered to be superior to a built-in antenna, it can only work satisfactorily in areas of relatively high signal strengths. It offers practically no immunity to ghost reception except by rotation, which might at the same time reduce the desired signal to a low level. In general, then, while this antenna is superior to a built-in type, it is definitely inferior to most outdoor types.

Window Antennas. – Another type of antenna sometimes used is one that is not strictly an indoor antenna, since it is usually mounted outside a window. But its principal application is in installations where a roof or other outdoor installation is not feasible, so it is included here for convenience, under the heading of "Indoor Antennas". One type of window antenna is called the *Gyro-Tenna.*

Gyro-Tenna. – This is a combination high and low frequency antenna which is generally mounted on a window frame on the outside of the house. A typical installation looks like this:

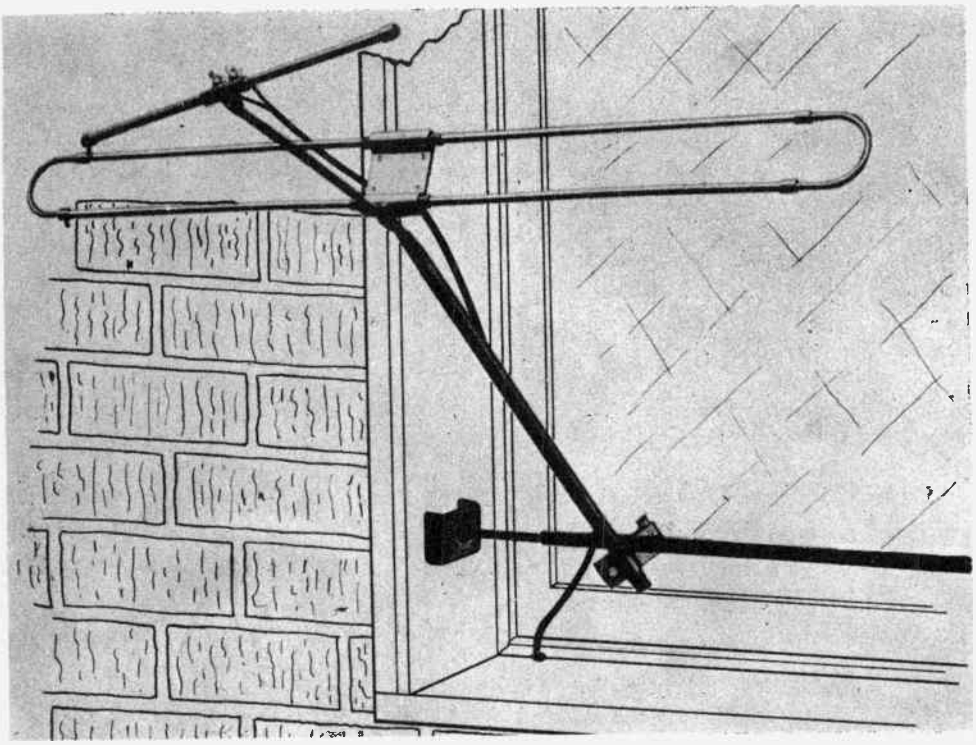

Fig. 6-34

The antenna consists of a low frequency folded dipole of variable length, and a high frequency dipole, also of variable length. The low frequency folded dipole may be telescoped from a minimum of about 42 inches to a maximum of 76 inches in length. When adjusted to the desired length, the telescoping section is locked in place with thumb screws. Similarly, the high frequency dipole may be varied in length by telescoping, from a minimum of about 19 inches to a maximum of about 32 inches.

The best lengths are found by trial and error. The antenna is so arranged that it can be swiveled and rotated to practically any conceivable position. This assists in getting the best reception under limited conditions.

The assembly is held between the vertical members of the window frame by a pressure fit obtained by forcing the two outer clamps against the vertical members by means of a threaded rod and tubing. Rotating the rod by means of a key causes the assembly to be varied in length from about 31 to 44 inches. This permits the mounting of the antenna in most window frames found in common use.

When to Use. – The Gyro-Tenna, while inferior to roof installations, is at the same time usually more effective than indoor installations. It can be used in areas of good signal strength with satisfactory results and does offer some possibility of rejection to ghost reception by proper orientation. Next to an actual roof installation, it is probably the best antenna now available.

NOTES

NOTES

NOTES

NOTES

ALIBIS don't excuse accidents

NATIONAL SAFETY COUNCIL · CHICAGO, · PRINTED IN U.S.A. 8474

HOME STUDY
TELEVISION
SERVICING COURSE

PREPARED BY

RCA INSTITUTES, INC.
A SERVICE OF RADIO CORPORATION OF AMERICA

HOME STUDY DEPARTMENT
350 West 4th St., New York 14, N. Y.

UNIT TWO

Lesson 7: INSTALLATION MATERIALS AND TOOLS
Lesson 8: ASSEMBLY AND ERECTION METHODS
Lesson 9: ANTENNA INSTALLATION (PART 1)
Lesson 10: ANTENNA INSTALLATION (PART 2)
Lesson 11: ANTENNA INSTALLATION (PART 3)

TELEVISION SERVICING COURSE

PREPARED BY

RCA INSTITUTES, INC.

A SERVICE OF RADIO CORPORATION OF AMERICA

HOME STUDY DEPARTMENT
350 West 4th St., New York 14, N. Y.

LESSON SEVEN

INSTALLATION MATERIALS AND TOOLS

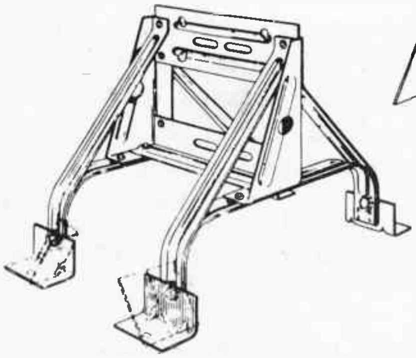

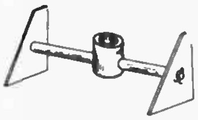

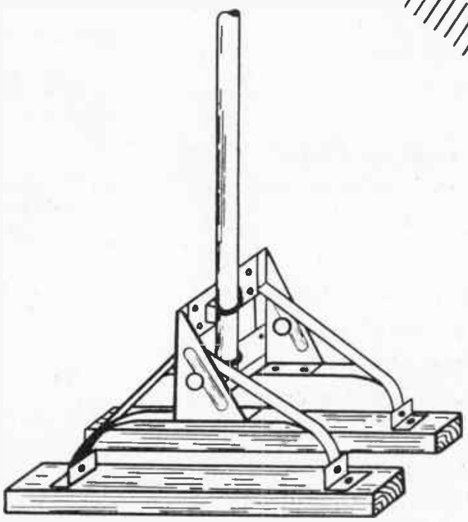

Lesson 7

THE ANTENNA INSTALLATION PROBLEM

7-1. It may seem that we've been jumping around a lot in the last few lessons, so perhaps it's time we stopped for a look around to see where we've been, and where we're going from here. In Lessons 3 and 4 we went pretty thoroughly into the procedures involved in installing the receiver itself. But we know that even the best receiver installation won't work very well unless we can supply it with that "strong, clean signal" we talked about in Lesson 2. That, of course, brings in the antenna, with which we are presently concerned. So let's examine just what's involved in the antenna installation.

First, it is necessary to choose from among the several available types, the antenna best suited to the conditions we find at a particular job. The available types have been described in Lesson 6, together with an explanation of their electrical characteristics. Just how to use our knowledge of these electrical characteristics in order to make a sound decision in a particular installation will be the subject of Lessons 9, 10 and 11. Then we must decide just where to place the antenna, and how to orient it.

How to Keep the Antenna in Place? – We know from Lesson 2 why the antenna, whatever its type, must often be placed as high as possible in order to pick up a stronger and cleaner signal. But just how will we keep the antenna up there? This is where Lesson 7 – this one – comes in. The usual answer is a mast of some kind. But the mast must be secured to something – a wall, a chimney, or a roof. The antenna must be adequately secured to the mast. When we get through, the whole assembly must be mechanically strong enough for the antenna to stay put. And the assembly must be secured in such a manner that the electrical performance of the antenna is not impaired.

All this requires a considerable assortment of antenna accessories – masts, brackets, guy wire, wing nuts, turnbuckles, supports and miscellaneous hardware. At various points, these accessories must be attached to something solid – usually part of the building itself. Building materials differ in their properties, and a method of attaching a support bracket that works fine on a wooden window frame just won't do on a steel window frame or a brick wall.

This brings us to another "considerable assortment" – the tools required for various parts of the job. They include various kinds of drills, special purpose hammers, pliers, ladders, etc.

We still have the job of running the transmission line from the antenna to the receiver, and securing it so it will stay put and continue to do its job. Additional precautions must be taken to protect the installation against lightning damage. All this involves some more accessories and tools.

Need for System. – To keep track of this welter of hardware requires a certain amount of system. This is necessary from the employer's point of view for record-keeping purposes, and from the individual employee's point of view to make sure he has with him everything needed for each installation job. After all, you don't want to be stopped in the middle of a job just because you find you don't have enough stand-off insulators to finish.

This lesson, then, will take up the following topics:

(1) Antenna installation accessories, materials and hardware.
(2) Installation tools, and how to use and care for them.
(3) Issuing and checking practice with respect to both materials and tools.

Where We Go From Here. – In Lesson 8 we shall apply what we have learned in Lesson 7, and consider the assembly of the antenna, and the techniques employed in erecting and securing the mast or other antenna support, in various locations.

In Lesson 9 we shall start to study the antenna installation as a whole, including how to plan the installation for the most economical job consistent with best overall results, under a number of commonly encountered sets of conditions. This will involve a lot of judgment. And sound judgment requires adequate information. But by the time you get to Lesson 9, Lessons 6, 7 and 8 will have equipped you with most of the "thinking materials" – the facts about the electrical properties of various available antennas, and the possible solutions to the mechanical problems of their installation – that you will need to arrive at correct decisions on the job.

Bear in mind that the materials and methods are given as examples to be applied as best suits the individual circumstances. Materials and methods will change, but the basic idea of planning your work in advance will remain as a necessary fundamental.

Now we can go ahead with the meat of this lesson. And since the last of the three general topics listed above is the simplest, we shall dispose of that first.

GENERAL PRACTICES IN ISSUING MATERIALS AND TOOLS

7-2. Before the installation man or team can get to work on the installation job, the material for the job must be checked. Not only is it necessary to identify each part and know where and how to use it, but it is also necessary to keep track of this material in an orderly and systematic manner.

The Installation Truck. – The first item needed for an installation team is the installation truck. A typical installation truck is usually a ½ or ¾ ton panel type like the one shown in Fig. 7-1.

The senior team member (or single member of a one-man team), who is responsible for the truck, and usually does the driving, must see that the truck and everything in it is kept in good order. He must make a personal check for any defective parts, such as brakes, lights, horn, tires, etc. Such checks should be made regularly as a routine safety precaution. Any defect can then be found as soon as it develops – and repairs made promptly. The driver is held responsible for living up to all driving regulations and safety precautions.

Each truck should be equipped with a fire extinguisher and a first aid kit.

The Fire Extinguisher. – The fire extinguisher may be either CO_2 (carbon dioxide) or a Pyrene vaporizing liquid type. (Neither of these should

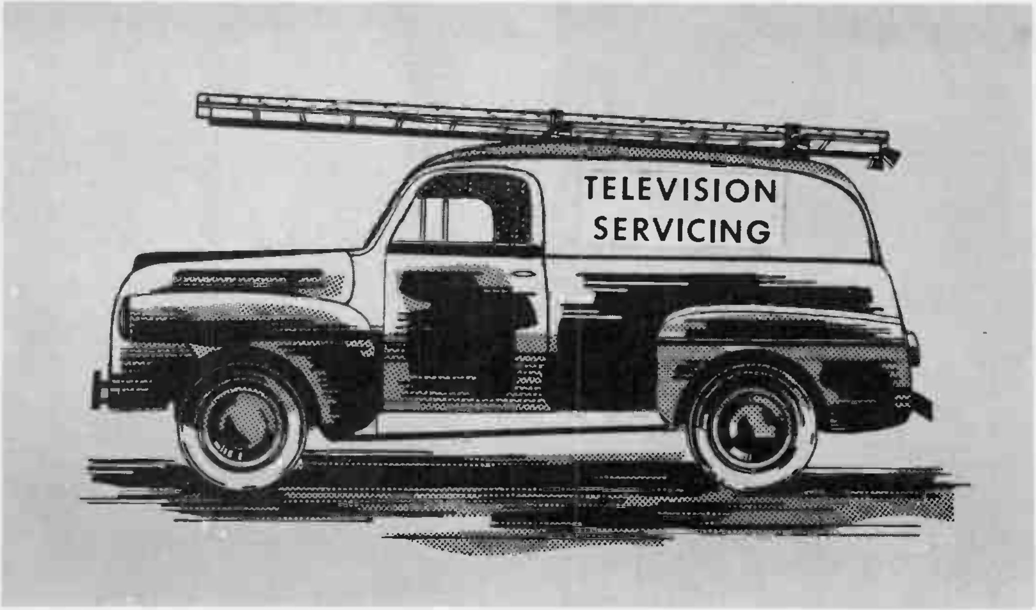

Fig. 7-1

be confused with the soda-acid type of extinguisher, which should never be used on electrical fires. For this reason, the soda-acid type is *not* carried in the truck). The first of these contains compressed CO_2 gas, which expands when it is released, smothering the fire. The second type contains a liquid which, when heated by the fire, gives off a non-inflammable vapor, which also smothers the fire. The fire extinguisher is for use in case the truck catches fire. Of course, if the customer's home catches fire, you'd better get your fire extinguisher quick, and use it. But get it back to the truck as soon as possible. It should always be kept in place in the truck, ready for an emergency. It should be checked periodically, to be sure that it is in good working condition. If you have to use it *at all*, even if there is still some gas or liquid left in it, turn it in for a fully charged extinguisher.

Fig. 7-2

Safety instructions for the use of this equipment are given briefly as follows:

Use On:

Class B Fires – Oil, gasoline, alcohol and other flammable solvents.
Class C Fires – Electrical equipment.

This fire extinguisher is not recommended for deep-seated fires in wood, rubbish and similar materials (Class A Fires).

How to Use:

1. Hold the fire extinguisher, with the fingers of one hand curled under the bottom of the extinguisher, near the nozzle.
2. With the other hand, give the handle a quarter turn to unlock it.
3. Pump the handle and direct the fluid at the base of the flame or back toward the source of the burning material.

The first aid kit, also, should always be kept in the truck ready for an emergency. When any items in the kit are used, replacements should be made as soon as possible. Two types of kits available are the Mine Safety Appliance First Aid Kit and the Johnson & Johnson kit. With each kit is supplied the list of items and their use, pasted inside the cover, to be available when it is needed. This list (for the M.S.A. kit) is reproduced in Table A.

Fig. 7-3

TABLE A

M–S–A FIRST AID KIT

10 UNITS TYPE D
DIRECTIONS AND CONTENTS

For covering large wounds or burns	4 IN. COMPRESS BANDAGE Cat. No. FA–2152	
	2 IN. COMPRESS BANDAGES Cat. No. FA-2486	For covering medium size wounds or burns
For covering small wounds, especially finger injuries	ADHESIVE COMPRESSES (2) Cat. No. FA–2750	
	FOILLE for BURNS Cat. No. FB–12282	For treating burns
For sterilizing wounds	IODINE BRUSHES Cat. No. FA–2259	
	AMMONIA INHALANTS Cat. No. FA–2156	For treating shock or fainting
For sling or cover dressing	40 IN. TRIANGULAR BANDAGE Cat. No. FA–2144	
Tourniquet for checking arterial bleeding	TOURNIQUET AND FORCEPS Cat. No. FA–2146	Forceps for removing splinters

CUTS, WOUNDS: – Sterilize wound by painting with iodine. Cover with compress bandage. If bleeding in spurts (arterial bleeding) apply tourniquet between wound and heart at proper pressure point. Study pressure points and know how to stop arterial bleeding.

BURNS: – Apply Foille liberally to burned or injured areas. To facilitate healing, keep moist with frequent application. If gauze dressings used, change every 48 to 72 hours.

SHOCK, FAINTING: – Lay patient flat on ground. Loosen clothing. Rub limbs to stimulate circulation. Allow patient to inhale aromatized ammonia vapor from ammonia inhalant. If not breathing, give artificial respiration.

Keep Truck Locked and Neat. – The closed panel type truck not only protects material placed in it from rain or snow, but it permits the body to be locked. It is good practice to keep it locked at all times, except when material is being put in or taken out. There are many localities where this is necessary to discourage petty thievery; at all times it is desirable as a general procedure.

It is important to follow an orderly procedure in storing all materials, and to do a continuous house-cleaning job to keep the interior of the truck in good order at all times. Then you can always find what you want without waste of time, and you will avoid danger of injury to the equipment or to yourself.

The installation truck should be able to carry all materials necessary for television installations. Inside, it should be fitted with special cabinets or compartments for the storage of installation materials or parts, hardware, tools and test equipment. Outside, on the roof, you need carriers for long masts and ladders.

Installation Tools. – While there is some variation, depending on the needs of the area, in

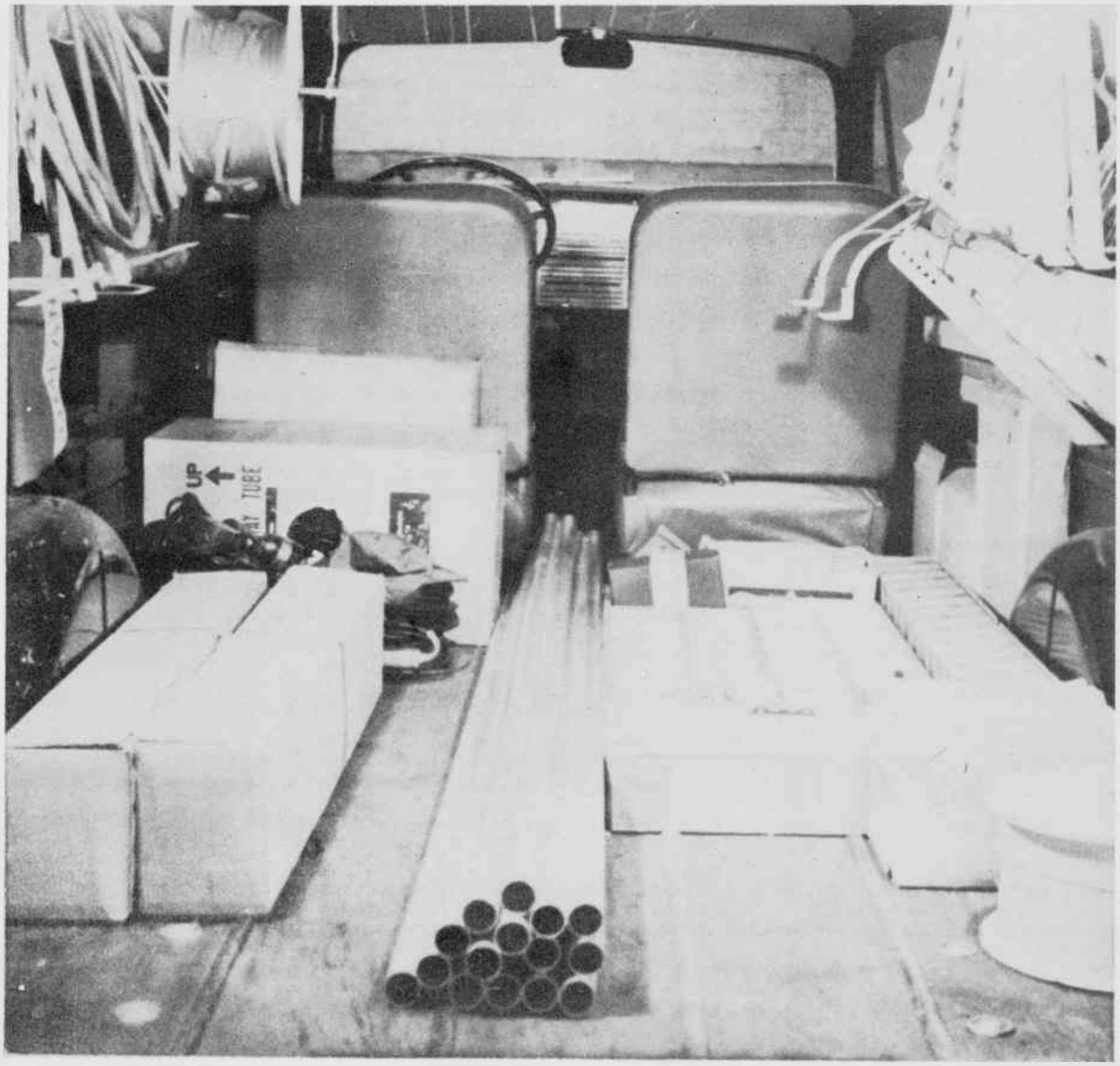

Fig. 7-4

general, the following tools are considered necessary equipment for the truck:

1	28 ft. aluminum ladder
1	Roof hook ladder
1	Rope (75 ft.)
1	Electric power drill
4	Carboloy drills, 2 of ½" and 2 of ¼"
1	½" wood drill and 1 extension length drill
1	Rawl drill, sledge and tamping tool
1	Pair of sound power phones and extension cord
1	100 ft. line cord
1	Drop cloth
1	Polishing cloth
	Plastic wood and roofing tar

In addition, each man should have a kit of small hand tools, such as: pliers (regular, long-nose and diagonal), screw drivers (large, medium and small), open end wrenches (all sizes), soldering iron and flash light.

All tools issued should be kept in good order. Since drills must be kept sharp to do an effective job, it is good practice to check your drill often enough so that you will be able to have them sharpened when necessary. Later in the lesson, we will consider each of these tools in detail, to discuss its proper use and care.

TABLE B

INSTALLATION MATERIAL LIST

COMPANY NAME ______________________ TRUCK # ________________

TECHNICIAN ______________________ DATE ________

Part No.	Description	Quan.	Part No.	Description	Quan.
.....	Antenna – Dipole & Reflector	15	.....	Lightning Arrestor	15
.....	Antenna – Dipole	4	.....	Lightning Arrestor	4
.....	Bracket – Window	3	.....	Transmission Line	2000'
.....	Bracket – Fl. Roof	1	.....	Heavy Trans. Line (Ft)	
.....	Support for Bracket	1	.....	Twinex Trans. Line	
.....	Ant. – F.D. Ch. #2 Kit		.....	RG8U – Co-Ax	
.....	Ant. – F.D. Ch. #3 Kit		.....	Mast – Std. 1 3/8" x 12'	2
.....	Ant. – F.D. Ch. #4 Kit		.....	Mast – Spec. 1 3/8" x 12'	
.....	Ant. – F.D. Ch. #5 Kit		.....	Mast – Spec. 1 5/8" x 12'	
.....	Ant. – F.D. Ch. #7 – #13 Kit		.....	Mast – Spec. 1 7/8" x 12'	
.....	Telrex – 4X–TV Ant. Kit		.....	Mast – Spec. 2 1/8" x 12'	
.....	Hi Freq. Ant.	15	.....	Mast – Std. 1 3/8" x 8'	15
.....	Harness	15	.....	Mast Bracket Assembly	
.....	Team Block	15	.....	Rod – Ground	2
.....	Capacity Loaded Dipole	1	.....	Wire – Ground	200'
.....	Indoor Antenna	3	.....	Wire – Guy	20'
.....	Match. Element Ch. #2		.....	Pipe Straps	20
.....	Match. Element Ch. #3		.....	Stand-off	100
.....	Match. Element Ch. #4		.....	Junction Box for 4 lines	1
.....	Match. Element Ch. #5		.....	Junction Box for 3 lines	1
.....	Wings (4)	2	.....	Junction Box for 2 lines	1
.....	Rods (2)	2	.....	Fuse	2
.....	D.P.D.T. Switch	1			

Responsibility accepted for above ________________________

Installation Materials. – In order to keep track of installation materials, a check list of commonly used materials, such as the one shown in Table B, may be used. On this form are recorded the materials initially issued to the installation team. While this may vary from time to time, or from one company to another, according to local conditions, in general enough material should be carried in the truck for about 15 installations, or sufficient for one week's work.

Once a week, or more often if necessary, the material used may be replenished by turning in a material requisition form (Fig. 7-5), properly filled out, to show the materials that have been used, and to what jobs such use is to be credited.

You will notice, in these forms, that each item is identified not only by a description, but also by a number. Such a number system becomes very helpful when you deal with a great many items, many of which vary only in size or other minor respects. It usually is helpful to have a complete list of installation materials with a stock number for each item. Even the smallest part has a value. Operating costs can be kept down by keeping track of all materials and avoiding waste.

Of course, a list of materials is always subject to additions and to change. The Installation Material list and the Material Requisition, although subject to change from time to time, serve to illustrate the method of identifying and keeping track of installation materials.

Paper Work. – To the man who earns his living by handling tools, paper work is usually considered as a nuisance. However, this paper work is necessary to keep track of what you are doing, and to enable any company to remain in business. The forms set up here for keeping track of installation materials have been made as simple as possible. Care in filling them out properly can save much time and trouble.

After the initial kit of materials has been acquired, it becomes merely a matter of keeping track of additional materials by means of the Material Requisition form, shown in Fig. 7-5. This is easily done by following the instructions on that form. They are:

1. Total the quantities of each material used from your kit, that you have listed on the job card and office copy of your completed contracts, and enter the totals in the appropriate lines, using the column headed "QTY. USED FROM KIT".
2. If the installation supervisor or shop manager has authorized you to draw additional material as a unit of your kit, enter this quantity in the column headed "ADD TO KIT".
3. If the installation supervisor or shop manager has authorized you to return some of the material from your kit, enter this quantity, encircled, in the column headed "ADD TO KIT", and hand the material to the stock clerk with this requisition.
4. Should you need material for a special job, not carried in your kit, enter the quantity in the column headed "TEMPORARY CHECK OUT"; but do not indicate any job number or customer's last name, at this time. If you do not use this material on the job, return it to the stockroom and the stock clerk will cross out the charge on the requisition.
5. If you use the material drawn as a "TEMPORARY CHECK OUT", enter the quantity on your current requisition, in the column headed "CREDIT FOR USE", and show the job number and customer's last name. This will offset the charge on the requisition.
6. Each job number (contract number or work order number) *and* the customer's last name used in entering the quantities must be listed in the column headed "JOB # AND CUSTOMER'S LAST NAME". List these numbers and names in the same order in which you will hand them to the stock clerk; they do not have to be written opposite any particular stock usage.
7. Enter the miscellaneous hardware (that you need at the time this requisition is being submitted) in the space provided.
8. Attach this requisition to the contracts and work orders listed hereon and submit to the stock clerk.
9. Enter *material only* on this requisition. Use a "Parts and Tube Requisition" for parts or tubes.

While, like any other company form instructions, these are subject to change, they illustrate the type of instructions necessary for systematic and orderly record keeping.

Fig. 7-5 shows the Material Requisition form filled out. The figures indicate the parts that must be replaced in the kit as a result of eleven antenna installations made during the previous working period, one week. Three of the installations were made with one type of bracket, one with another type, and the remaining seven were mounts using spacer block and pipe straps held by lead anchor bolts.

Additional brackets and two sets of antenna wings are added to the installation kit, while three folded dipole high frequency antennas (indicated by the 3 in a circle) are removed from the kit. Also, extra material to provide for an installation with a 33 ft. mast is checked out.

All major items of hardware are listed. In general, it is not required to list smaller items of hardware such as washers, nuts, bolts, lag screws, etc. These are replenished as required, with the installation man keeping a sizable stock of these items in his truck.

By keeping these records always up-to-date, the installation man knows what he needs to do a satisfactory job; and the stock clerk knows what he needs to order so that he will always have sufficient materials on hand. And, of course, the shop manager knows whether his shop is running in the black or *red*.

In the forms listed above, all materials checked out to the installation man are recorded. In the following sections of this lesson we will examine these materials in some detail. Since the parts that make up the various antennas (both outdoor and indoor) have already been described in Lesson 6, we will now concentrate on such items as masts, supports, transmission line and miscellaneous hardware that the installation man requires to do his job.

ANTENNA MASTS AND ACCESSORIES

7-3. The first classification of materials that we will consider comprises the various types of masts used to support the antenna, and the materials used with it, such as: the supports for the masts, guy wires, anchor bolts and screws, and other miscellaneous hardware needed to make the mast and antenna secure.

Masts. – Television receiver antenna installations use masts made of metal tubing. These mast sections, of the proper length,

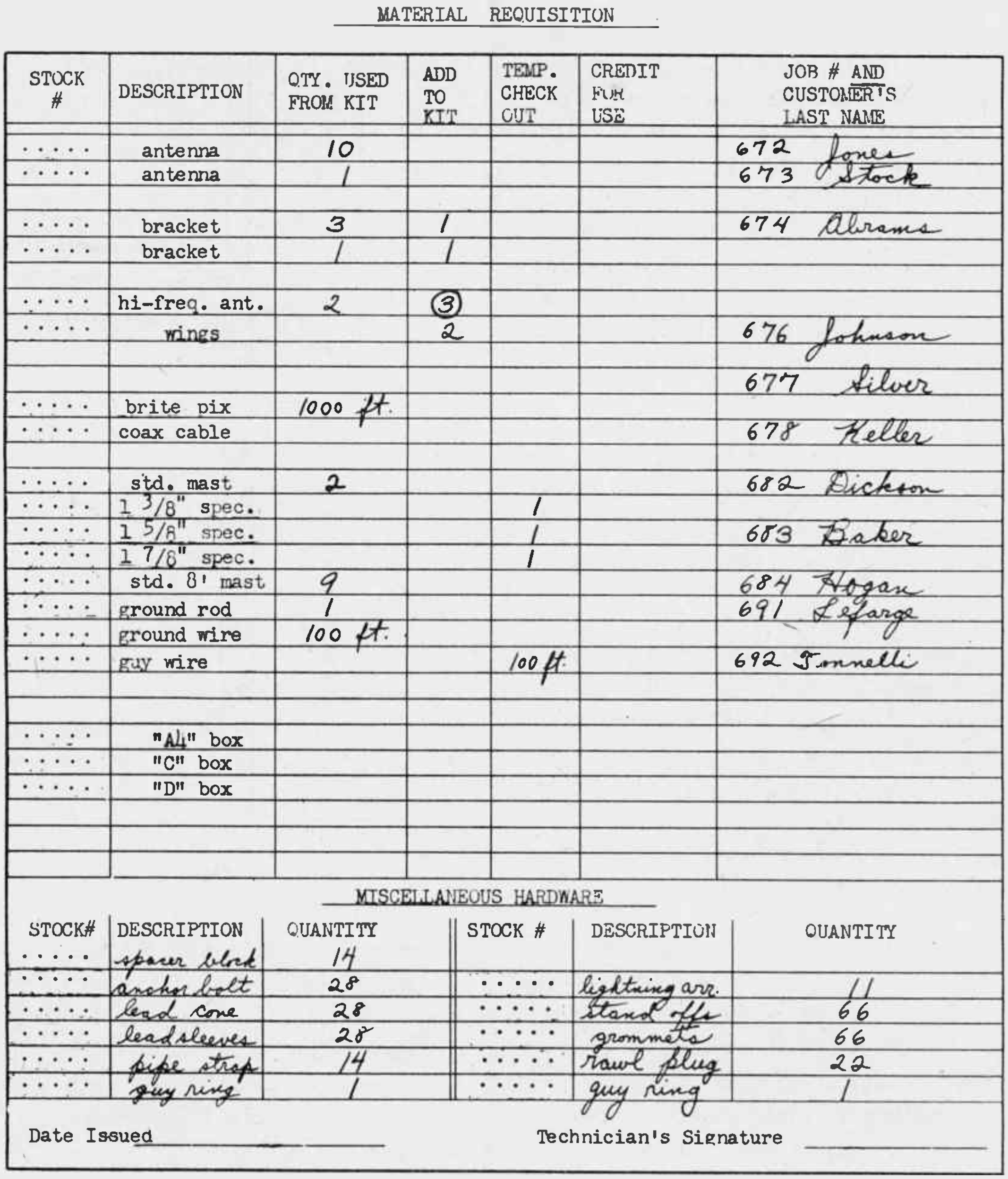

MATERIAL REQUISITION

STOCK #	DESCRIPTION	QTY. USED FROM KIT	ADD TO KIT	TEMP. CHECK OUT	CREDIT FOR USE	JOB # AND CUSTOMER'S LAST NAME
.....	antenna	10				672 Jones
.....	antenna	1				673 Stock
.....	bracket	3	1			674 Abrams
.....	bracket	1	1			
.....	hi-freq. ant.	2	③			
.....	wings		2			676 Johnson
						677 Silver
.....	brite pix	1000 ft.				
.....	coax cable					678 Keller
.....	std. mast	2				682 Dickson
.....	1 3/8" spec.			1		
.....	1 5/8" spec.			1		683 Baker
.....	1 7/8" spec.			1		
.....	std. 8' mast	9				684 Hogan
.....	ground rod	1				691 Lefarge
.....	ground wire	100 ft.				
.....	guy wire			100 ft.		692 Tonnelli
.....	"A4" box					
.....	"C" box					
.....	"D" box					

MISCELLANEOUS HARDWARE

STOCK#	DESCRIPTION	QUANTITY	STOCK #	DESCRIPTION	QUANTITY
.....	spacer block	14			
.....	anchor bolt	28	.....	lightning arr.	11
.....	lead cone	28	.....	stand offs	66
.....	lead sleeves	28	.....	grommets	66
.....	pipe strap	14	.....	rawl plug	22
.....	guy ring	1	.....	guy ring	1

Date Issued ____________ Technician's Signature ____________

Fig. 7-5

tube size and wall thickness, are both light and strong enough to hold the antenna in normally encountered storm or icing conditions. The following is a list of sizes of mast sections.

Part No.	Description
.....	Standard 1-3/8 Dural Tubing 12' length
.....	Special 1-3/8 Dural Tubing
.....	Special 1-5/8 Dural Tubing
.....	Special 1-7/8 Dural Tubing
.....	Special 2-1/8 Dural Tubing
.....	Standard 1-3/8 Dural Tubing – 8' length

Initially, the 12' length of 1-3/8 Dural Tubing was used mainly as a "standard" mast. However, it was found that an 8' length was sufficient in many localities, so the shorter item was used. More recently, a 4' length was considered satisfactory in certain types of installations. Another common type consists of 5' lengths. One end of it is crimped to enable it to telescope into another to form almost a 10' mast. This type of mast has a key and slot arrangement to prevent the telescope mast from turning.

Mast Characteristics. – The material used for many masts is tubing made of the non-corrosive aluminum alloy known as Dural, and designated commercially as 61ST. The size used in *standard* installations has an outside diameter of 1-3/8". It is required to have a tensile strength of 42,000 pounds per square inch. The 12-ft. lengths have a weight per foot of 0.434 pound, and wall thickness of 0.083 inch. The 8-ft. length tubing has a wall thickness of 0.065 inch. A 12-ft. section is more than strong enough to withstand the stress of any wind or storm likely to be encountered, provided no more than 10 feet of its length is left unsupported.

For *special* installations, larger size tubing is used as required. These have outside diameters of 1-5/8, 1-7/8 and 2-1/8 inches and a wall thickness of 0.120 inch. They come in 12-ft. sections.

For masts taller than 12 ft., appropriate sections are telescoped one into another. It is necessary first to remove all burrs from the ends. Since a tight fit is formed, a lubricant and a bit of force may be needed to get the smaller tubing in to the proper depth. Care is necessary in handling this tubing because dents and abrasions in the tubing will prevent it from telescoping.

The 1-3/8" tubing is telescoped into the 1-5/8" tubing to a depth of two feet; and the 1-5/8" should go into the 1-7/8" tubing at least one foot. For the larger size tubing, the greater wall thickness enables sufficient strength at the joint to be obtained with the tubes telescoped to the lesser depth. These three sections form a mast having a maximum height of 33 feet. Each telescoping joint must be bolted at two points, at 90 degree intervals around the pipe, twelve inches apart at the upper joint and six inches apart at the lower joint, using 1/4" bolts 2-3/8" long, with lockwashers at both ends. The bolt holes must be drilled on the job with a power drill at the time the mast is assembled. For a 44 ft. mast, an additional section of 2-1/8 inch tubing is used.

Because of the additional stress on tall masts, due to wind pressure, and the need to prevent swaying of the antenna, masts taller than 12 ft. should be guyed. The materials used for this purpose will be considered later in this section.

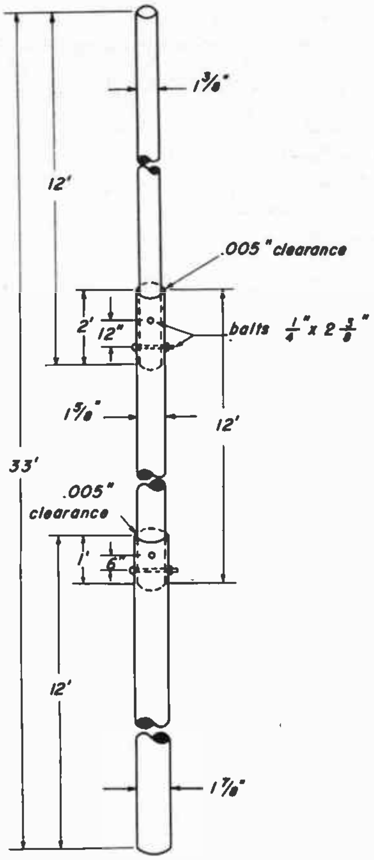

Fig. 7-6

Materials for Supporting the Mast. – The type of mount used to support the mast depends on where the antenna is to be placed. These mounts are designed for use on various types of locations encountered in installations, such as: (1) flat roofs, (2) peak roofs, (3) chimneys, (4) sides of houses, or (5) windows.

Some of the common mounts and materials used in supporting the masts are listed below. As improved devices are developed, they may replace some of these.

..... Bracket and strap for wall or window mounting
..... Peaked roof bracket
..... Standoff Wall Bracket
..... 1" x 2" Spacer block for chimney or brick wall mounting
..... 2" x 2" Spacer block for chimney or brick wall mount
..... 1½" x 2" Spacer block for chimney or brick wall mount
..... 1-3/8" Pipe strap for chimney or brick wall mount

. . . . . 1¼" Pipe strap for chimney or brick wall mount
. . . . . 1½" Pipe strap for chimney or brick wall mount
. . . . . Expansion shield
. . . . . ¼" x 3" Anchor bolt for chimney or brick wall mount
. . . . . ¼" x 4" Anchor bolt for chimney or brick wall mount
. . . . . Lead cone for use with above
. . . . . Lead sleeve for use with above
. . . . . Strap for Wall Bracket
. . . . . U Bolt for Wall & Peaked Roof Bracket
. . . . . Fishplate for Wall & Peaked Roof Bracket
. . . . . Bracket for flat roof
  Wood base (weather-proof plywood with 2 coats of Valspar varnish)
  Bolt for above bracket and wood base
. . . . . Chimney strap with corner supports

(a) Standoff Wall Bracket. – This is one of the earliest type mounts used in installations and is still used in many cases. The complete unit is made up of two brackets and two straps, with the mast held in place by two U bolts and fishplates, as shown in Fig. 7-7 (a). The brackets and straps are made of 1/8" hot rolled steel, with either a hot-dip-galvanized finish or an Iridite Bright zinc plate. Either the galvanized or zinc plate finish is necessary to prevent rusting of the steel when exposed to the weather.

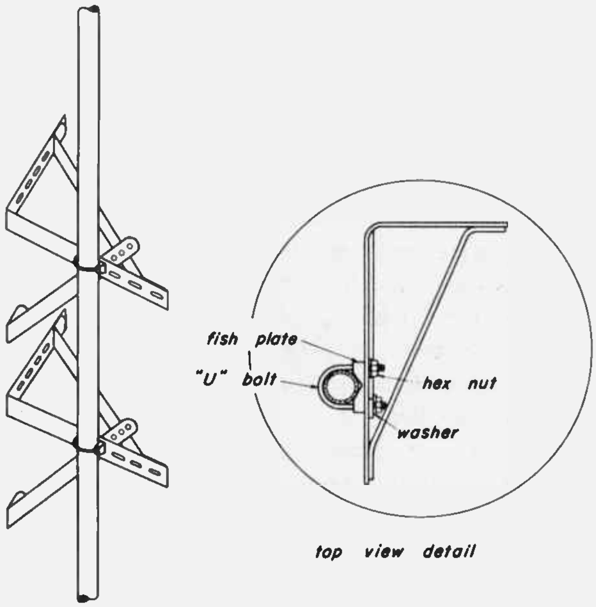

Fig. 7-7-(a)

Since this unit is made up of separate parts which can be put together in a number of different ways, it can be used for many different types of installations. It provides a clearance of 12" from the building wall. By adding perforated extension arms, a 2 foot clearance of the mast from the building can be obtained.

(b) Peaked Roof Bracket. – This is an improved type of bracket that is particularly well adapted for use on peaked roofs. Its principal features are: (1) an adjustable base structure to provide a stable mount for any slope of roof, from a flat roof to the steepest that would normally be encountered, and (2) a mast-raising arrangement to facilitate the raising of a tall mast. These features are shown in Fig. 7-7 (b). The mast-raising feature is of particular value when installing a tall mast on a peaked roof – a tough job without such an aid.

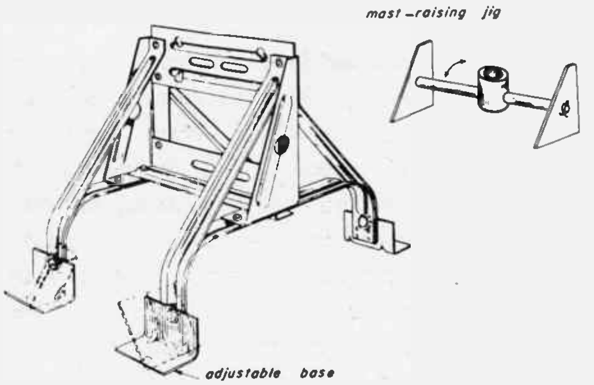

Fig. 7-7 (b)

The mast is held in place with two U bolts and fishplates. The mast-raising swivel is removed after the mast has been raised. The procedure followed will be explained in detail in Lesson 8.

(c) Antenna Base Assembly. – This type of antenna mount, shown in Fig. 7-7 (c), consists of a pipe base bracket fastened by bolts to a weather proofed plywood base. It is designed for use on a flat roof with a mast 12 ft. or higher, which must be firmly guyed. This type of base is particularly useful where there is danger of breaking the roof seal. The base rests on the flat roof without being fastened by lag screws or other means. The 10" x 10" base covers a wide area so that the mast is held firmly by friction, aided by guy wires, without danger of the base slipping. A leveling shim made of red cedar or fir, hand dipped with two coats of weather proof varnish, can be placed underneath the bracket for leveling the mast, if the roof has a slight slope.

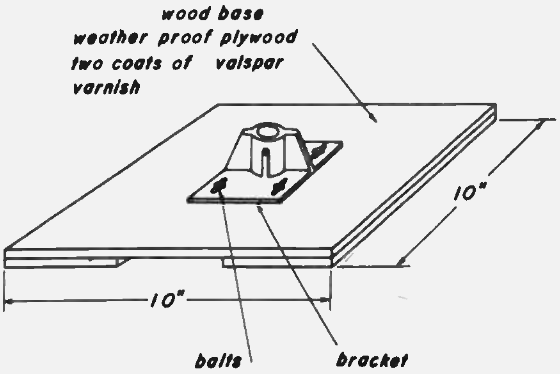

Fig. 7-7 (c)

(d) Pipe Straps and Spacer Blocks. – This is a general purpose type of mount that can be used on any vertical surface on which there is no more than a 1" or 2" overhang that the mast must clear. This is the situation normally encountered on chimneys or roof parapets. Two or three pipe straps and spacer blocks, usually fastened with lead anchor bolts, are used to hold the mast. The number required depends on the mast height and the quality of the brick or other surface material on which the mount is fastened. When fastened in brick, as on a chimney, a hole must be drilled in the brick to accomodate the lead anchor bolt, which is then tamped tightly in place with the use of one or more lead sleeves and lead cones. The method will be explained in more detail in Lesson 8. An alternate method, shown in Figure 7-7 (d), is to use a lead expansion shield and ¼" lag screw.

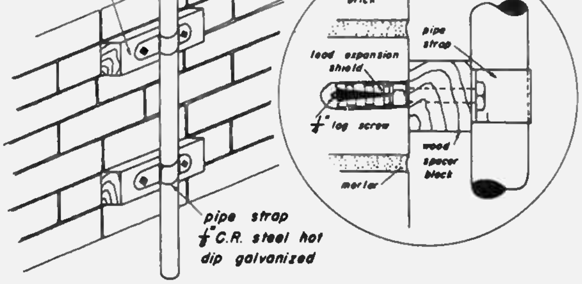

Fig. 7-7 (d)

(e) Chimney Strap. – Because of the time and labor required to install a chimney mount using pipe straps and spacer blocks, it is considered desirable to use a strap that can be fastened around the chimney. Such a device has the additional advantage of reducing the danger of possible injury to the chimney. The chimney strap must be weather proof, preferably of stainless steel construction. It must be adjustable for different sizes of chimneys and must fasten easily and quickly, if it is to justify the added cost by a saving in time and labor.

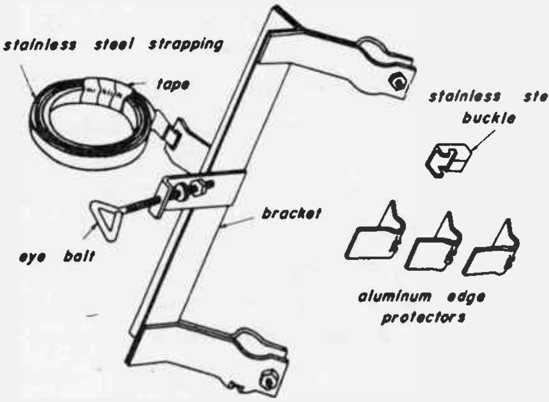

Fig. 7-7 (e)

A strap approved for use on chimney installations is shown in Fig. 7-7 (e). This type of mount is made up of a bracket with ten feet of stainless steel strapping, a stainless steel eyebolt with nut and lock washer, and a stainless steel buckle attached. Three aluminum edge protectors are slipped over the strapping, spaced to fit over three corners of the chimney, with the bracket fitting over the fourth corner. The corner protectors not only distribute the pressure on the chimney, but also serve to minimize the sharp bending of the strap at the corners. The method of installing this chimney strap is explained in detail in Lesson 8.

Guy Wire and Accessories. – All masts taller than 12 ft.should be guyed to obtain a safe, rugged installation and to prevent vibration in a strong wind or storm. In addition to the wire itself, special hardware is needed to hold the wire to the mast and to the roof or other supporting structure, and to adjust the wire to the proper tension – or, rather, the proper degree of slack.

The following are some of the materials that may be used in guying a mast:

Part No.	Description
.....	Galvanized guy wire
.....	Thimble
.....	1/8" Cable clamp
.....	1/4" x 2-1/8" Turnbuckle
.....	5/6" x 2-5/8" Turnbuckle
.....	1/4" x 3" Lag screw
.....	1/4" x 4" Lag screw
.....	Expansion shield
.....	1-3/8" Guy ring
.....	1-5/8" Guy ring
.....	1-7/8" Guy ring

The guy wire often used is a 42-strand wire rope made up of 7 woven ropes of 6 strands each, on a rope core. It has a tensile strength of 600 lbs.

At the mast, the guy wire is held by means of a guy ring which slides over the upper section of the mast and rests on the lower section of a telescoping joint. The guy ring is made of 1/8" rolled steel which has been hot-dip-galvanized to make it weather resistant. The guy ring must be able to turn freely on the mast. Six holes are punched in the ring so that as many wires as may be considered necessary, usually three or four, may be equally spaced and fastened around the ring.

Figure 7-8 shows where the various accessories are used in making the guy wire secure. Thimbles are used on the guy ring and the turnbuckle, where the wire is bent. This prevents fraying or breaking of the wire at these points where the greatest bending occurs. The cable clamps hold the wires together where they are bent back, just below the thimbles, to from a tight bond with no slippage. The guy hook, for anchoring the turnbuckle, may either be screwed directly into a wooden structure or into a lead expansion shield installed in brick or concrete. The turnbuckle, used to tighten the guy wire to the proper degree of tension or slack, is made up of three parts: an aluminum body, and two cadmium plated steel eyes, screwed into the the body. As the body is turned, the screw eyes may be brought closer together to take up slack in the guy wire; if turned in the opposite direction, the screw eyes will be moved further apart to slacken the wire. Guying methods and procedures will be explained fully in Lesson 8.

Ground Wires and Rods. – For protection, in the improbable event that the mast is struck by lightning, the mast must be adequately grounded. The materials required for this purpose are:

Part No.	Description
.....	Ground rod
.....	Ground strap (clamp)
.....	Aluminum ground wire

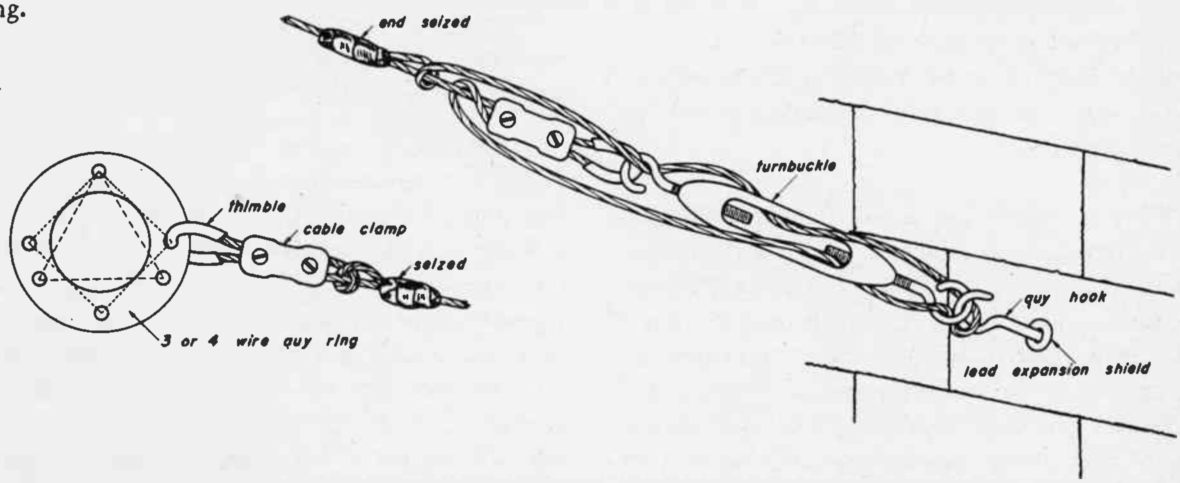

Fig. 7-8

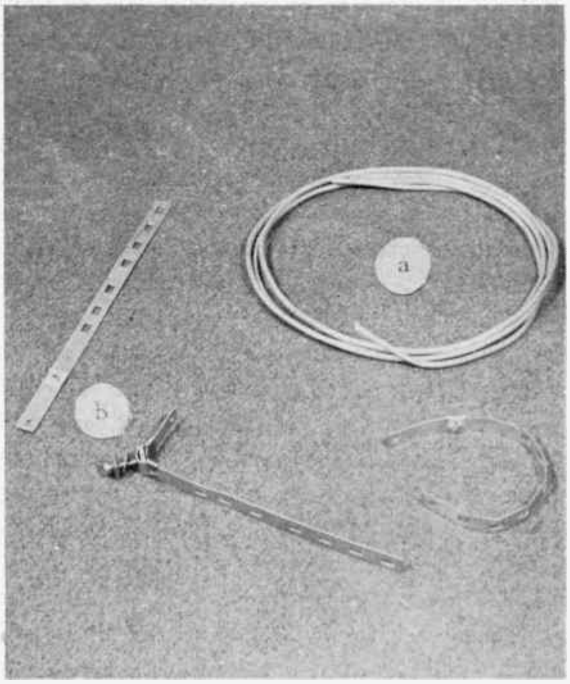

(a) Ground wire
(b) Ground strap

Fig. 7-9

While #6 aluminum ground wire has often been used for grounding the mast, this wire provides a factor of safety greater than has been proved necessary in practice. Since the use of a smaller size, #12 wire, has been approved in the National Fire Underwriters Code, this size is now considered satisfactory for most installations.

The ground strap is made of stainless steel. It can be used either for grounding the aluminum ground wire or attaching the lightning arrestor to a water pipe.

Where a water pipe is not readily available for a ground, a satisfactory ground can be obtained by using a ground rod driven directly into the earth. This is a 4 ft. length of 3/8" steel rod, copper plated, with a screw attachment at the upper end, to which the ground wire can be connected. In some localities, local ordinances require that longer rods be used. These should be available in case they are needed for a particular installation.

TRANSMISSION LINES AND ACCESSORIES

7-4. Now that we have checked the various items that are used to mount, support and ground the mast, the next classification of materials to be checked off comprises the types of transmission lines and the accessories that go with them.

Properties of Transmission Lines. – You will recall that in Lesson 2 we referred to the basic characteristics of a transmission line. Essentially, *a transmission line is a system of electrical conductors with uniformly distributed characteristics*, designed to convey electrical energy from one place to another with as *little loss and distortion as is practicable.* To compare types of transmission line, therefore, we express the *uniformly distributed characteristics* in terms of the number of *ohms of characteristic impedance*; and the *degree of loss* in the line as the *number of decibels (db) of attenuation per 100 ft. of line, at some particular frequency.* These are comparative values with which we can choose the particular line needed for an installation. Later in the course, we will go into the explanation of why a transmission line behaves as it does.

Although the amount of loss or attenuation in a transmission line is usually expressed in decibels (db), it is well to remember that this loss can also be expressed as a percentage of the input voltage. For example, a line that has a loss of 3 db at a particular frequency, delivers an output voltage of .708 of the input voltage, corresponding to a loss of 29.2 percent.

As stated in Lesson 2, the *characteristic impedance* of a transmission line tells us whether the line will *match* the input impedance of a receiver. This impedance match is one of the conditions necessary for delivering the best signal from the antenna to the receiver. Characteristic impedance is a property of each particular type of line, like the spacing between its conductors. It does *not* depend on the length of the line. The degree of attenuation, or loss of signal, in decibels per 100 feet, is likewise a property of the type of line. But the *total amount* of at-signal = .891 (db loss)

tenuation *does* depend on the length of line. Thus, 200 ft. of line will cause twice as many db of attenuation as 100 ft. of the same line.

Five types of line commonly used for installation work are shown in Fig. 7-10. They are:

Part No.	Description
.....	Parallel wire transmission line
.....	Parallel wire heavy transmission line
.....	Twinex transmission line
.....	RG59U Co-axial transmission line
.....	Tubular Amphenol transmission line

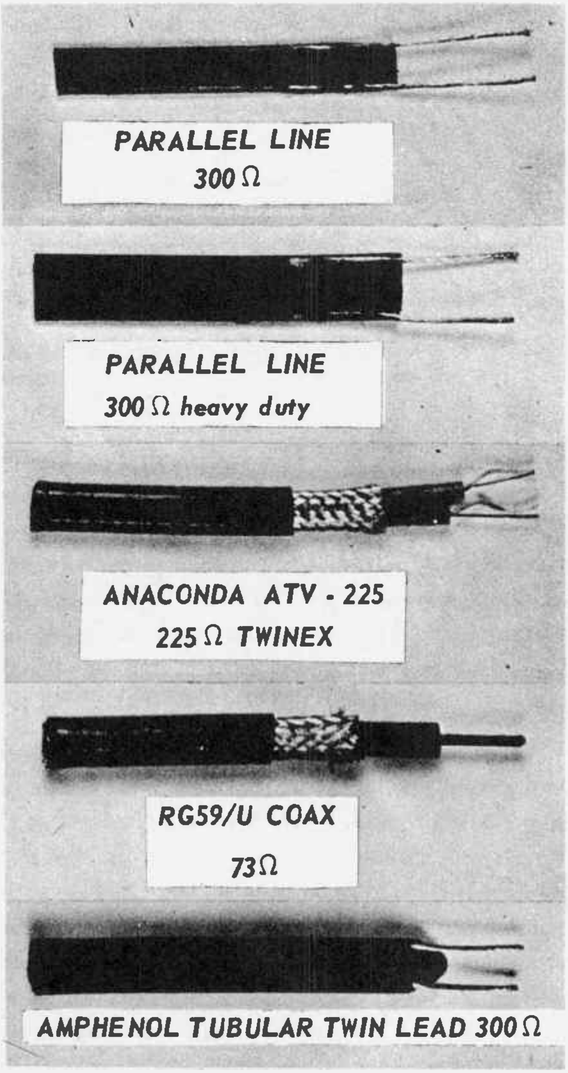

Fig. 7-10

(1) Parallel Wire Transmission Line. – This is by far the most commonly used type of transmission line. It is made up of two parallel conductors imbedded in a strip of semi-flexible solid dielectric material, polyethylene, which holds the conductors at a correct and uniform distance apart. The conductors are copper wires, stranded to give reasonable flexibility.

This type of transmission line will be referred to as either *parallel wire line* or *twin lead* throughout the Course.

Typical parallel wire transmission line has a characteristic impedance of 300 ohms, an attenuation of about 1.2 db per 100 ft. at 100 mc., and a breaking strength of about 200 lbs. The characteristic impedance of 300 ohms matches the input impedance of most television receivers. The attenuation of the signal per 100 ft. of line will be somewhat less for frequencies lower than 100 mc. and somewhat greater for frequencies greater than 100 mc.; but, for comparison purposes, the value given for 100 mc. is sufficient. The value of 1.2 db per 100 ft. of transmission line (which means, for that length of line, 0.87 of the signal voltage available at the antenna is delivered to the receiver terminals) represents a much lower signal loss than can be obtained by the use of shielded lines, such as co-axial or Twinex.

(2) Heavy Duty Parallel Wire Line. – This line uses slightly heavier conductors, and therefore requires a greater spacing between conductors. With a greater thickness of dielectric material, it forms a much more rugged line. In addition, the normally transparent polyethylene dielectric is colored dark brown by the addition of an anti-oxidizing agent in the form of a dye, to prevent deterioration by the oxygen in the air and by the action of the ultra-violet light of sunlight. Having proved its value by prolonging the life of the transmission line, the brown colored polyethylene is now replacing the transparent dielectric, even in the regular parallel wire line.

The electrical characteristics of the heavy or *deluxe* transmission line are very little different from those of the regular parallel wire line, but the increased ruggedness makes it useful in installations where greater mechanical strength and resistance to wear are essential. Of course, the cost is much higher.

(3) RG59U Co-axial Transmission Line. – While the parallel wire transmission line is satisfactory for most installations, there are cases in which local interference conditions are such that some form of shielded transmission line must be used. The co-axial type of transmission line consists of an inner conductor completely surrounded by an outer conductor, the two being separated and maintained at a uniform spacing by a polyethylene dielectric material. The inner conductor is either stranded or solid copper wire, usually tinned or silver plated. A vinylite jacket moulded on over the braid provides protection against wear and weather. Co-axial line is heavier and more rugged than parallel wire line, but the signal loss in the line is much greater and, of course, the cost is much higher.

Co-axial transmission line is made in a number of sizes. The RG59U line has an overall diameter of 0.242 inches. Its electrical characteristics, in terms that can be compared to the parallel wire line, are: a characteristic impedance of 73 ohms and an attenuation of 3.7 db per 100 ft. at 100 mc. An attenuation of 3.7 db means that 0.653 of the available signal voltage is delivered at the end of a 100 ft. line, or 0.347 of the signal voltage is lost. Incidentally, although a line 300 ft. long would introduce a loss of three times 3.7 db, or 11.1 db, this does *not* mean that we would lose three times 0.347 or 1.041 times the signal at the antenna! It means that in each 100 ft. length, we would lose 0.347 of the signal *delivered to that length*. Thus, the fraction of signal remaining at the end of the third 100 ft. length would be 0.653 × 0.653 × 0.653 or 0.278 of the antenna signal, and the total loss would be 0.722.

It is common practice to refer to the co-axial line as 72 ohm, 73 ohm or 75 ohm line because there are slight differences between different manufacturers. In any case, the characteristic impedance of the co-axial line must be matched to a 300 ohm receiver input, using a matching transformer (to be discussed later), or changing the antenna terminal connections on the receiver.

(4) Twinex Transmission Line. – Twinex is another form of shielded transmission line. In this case, two separate conductors are contained within the outer shield. The dielectric is polyethylene and air. Since the polyethylene is in the form of small hollow tubes which could become filled with water, it is necessary to seal the ends of the Twinex so that water cannot get into the line. The losses in this type of line are somewhat greater than for a comparable co-axial line, and the cost is slightly higher. But there are certain advantages.

One reason for using the Twinex line in preference to co-axial is the fact that its characteristic impedance (225 ohms) forms a much closer match to the input impedance of all receivers. Unlike the co-axial transmission line, Twinex requires no special matching methods.

Another advantage of Twinex over co-axial line results from the fact that the Twinex is a balanced line while the co-axial line is unbalanced. In the case of the co-axial line, the grounded outer conductor is a part of the line which carried the signal. In the Twinex line, the signal is carried by the two inner conductors, while the outer braid serves merely as a shield. Twinex, therefore, provides a balanced line which requires no special connections to the antenna or receiver input terminals. These advantages, in many cases, are considered sufficient to offset the slightly greater losses and higher cost over co-axial line, in locations where local interference is encountered.

There is no point is using either form of shielded line in interference-free locations where the regular parallel wire line is entirely satisfactory. This line has much lower signal loss, is much easier to install, and is cheaper to use.

(5) Other Types of Transmission Line. – New developments in transmission lines should be constantly checked for possible improvements. A type recently approved for *special use* is a parallel two wire line which has the conductors imbedded diametrically opposite each other in the wall of a round polyethylene tube. This line matches the standard 300 ohm input impedance of all receivers, and has lower losses than the regular parallel wire line, since there is less solid dielectric in the intense part of the electric field directly between the two conductors. However, what makes this line of particular value, is its property of being less subject to change of its electrical characteristics when exposed to the weather than are other types of two-wire line.

With regular parallel wire line, trouble is frequently encountered in salt water locations or under conditions of extremely wet weather, when the resulting increased conductivity between the parallel wires changes the electrical characteristics of the line and increases the signal losses – sometimes to the extent of losing the picture. With the tubular type of dielectric, moisture is kept out of the space directly between the wires. Thus, even though the outer surface may be wet, losses are kept to a minimum. This tubular type two-wire transmission line has been approved as a *special* installation in salt water or excessively moist locations. Of course, it is necessary to seal the ends of the line to prevent moisture from getting in.

Transmission Line Accessories. – In order to connect and support the transmission line properly, a considerable assortment of accessories is needed. Much of this material comes under the classification of miscellaneous hardware. However, all of these materials, even the smallest terminal lug and the fibre-headed tack, must be available at the right time and the right place when an installation job is to be done.

The transmission line accessories are listed in Table C.

In Figs. 7-11 to 7-15, a photo or sketch of each part has been included so that you may become familiar with what each part looks like. It is helpful to sort out this material into such classifications as: (1) materials for connecting the transmission line; (2) materials for supporting the transmission line; and (3) materials for protecting the transmission line. These groups will be examined in that order.

Materials for Connecting the Transmission Line. – There are three types of materials used to connect the transmission line. These are terminal lugs, junction boxes and matching transformers.

(1) Terminal Lugs. – Since we are dealing with very high frequencies, it is important that good electrical connection be made between the transmission line and the antenna, and between the line and the receiver. At these frequencies, a poor connection will result in excessive signal losses. The lugs used in most transmission line installations are a type which, when properly installed, provide a good electrical connection without the necessity for soldering. These lugs are of the ring or spade type. A hook-on type is

TABLE C

Part No.	Description
	Materials for Connecting the Transmission Line
.....	Antenna terminal lug
.....	Receiver spade lug
.....	Arrestor terminal lug
.....	Junction box for 4 lines
.....	Junction box for 3 lines
.....	Junction box for 2 lines
.....	Matching transformer
	Materials for Supporting the Transmission Line
.....	Grommet
.....	Fibre-headed tack
.....	Rubber stopper
.....	3" wood stand-off
.....	3" machine stand-off
.....	7" wood stand-off
	Materials for Supporting the Transmission Line (cont'd)
.....	7" machine stand-off
.....	Rawl plug
.....	Wire stand-off for 1-7/8" mast
.....	Wire stand-off for 1-5/8" mast
.....	Wire stand-off for 1-3/8" mast
.....	Locking clamp for wire stand-off
	Materials for Protecting the Transmission Line
.....	Lightning arrestor
.....	Lightning arrestor
.....	Vinylite tubing
.....	3/8" loom
.....	Friction tape ½" - lb. roll
.....	Rubber tape ½" - lb. roll
.....	Electric vinyl tape

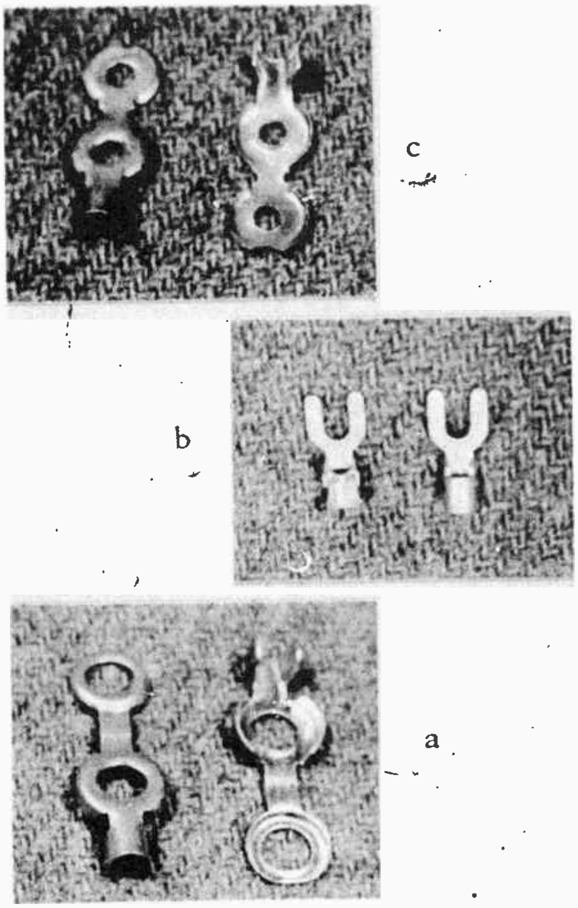

(a) Antenna terminal lug
(b) Receiver spade lug
(c) Arrestor terminal lug

Fig. 7-11

being considered to replace the above types. The method of assembling these lugs, and their connection to the antenna, the receiver and the lightning arrestor will be explained in detail in Lesson 8.

(2) Junction Boxes. – In special installations, two or more antennas are sometimes installed to obtain better interference-free or ghost-free reception of particular stations. This requires the use of a junction box to which the transmission line from each of these antennas can be connected. A switch, or switches, at the junction box enables the desired antenna to be connected to the input terminals of the receiver. Three types of junction boxes are:

(a) Junction box for four separate lines.
(b) Junction box for three separate lines.
(c) Junction box for two separate lines.

(3) Matching Transformers. – Where the use of a co-axial transmission line is necessary, matching transformers are needed to match the 73 ohms of the line to the 300 ohm input at the receiver, and to the antenna. The matching transformer shown in (d) of Fig. 7-12 may be used for both the antenna and receiver connections.

The use of additional items in the line results in additional loss. For example, by adding two such transformers (one at the antenna and the other at the receiver end) there is an insertion loss of 1 db, or a voltage ratio of output/input of 0.9. This, of course, is in addition to the loss in the co-axial line, which we have previously stated to be 3 db per 100 ft. at 100 mc., or a voltage ratio of output/input of 0.708. To allow for such high losses in the line, it is necessary that a sufficiently high signal intensity be available at the antenna.

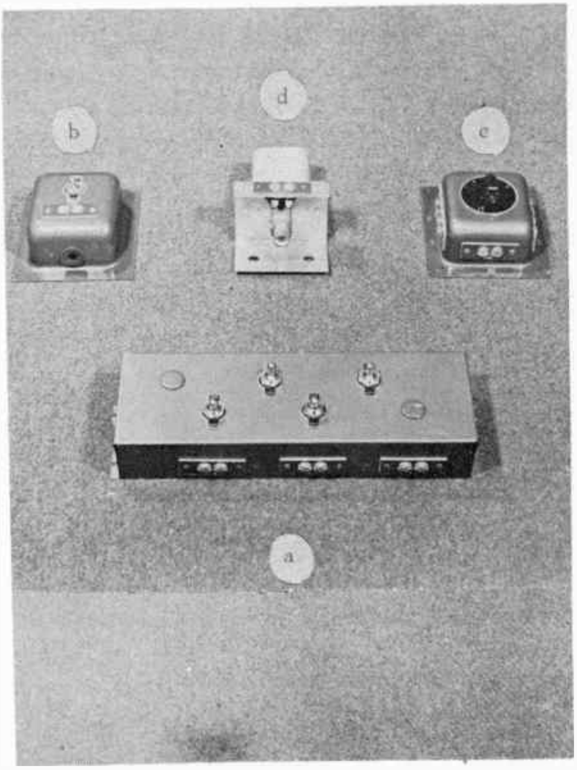

(a) 4-line junction box
(b) 3-line junction box
(c) 2-line junction box
(d) matching transformer (outdoor)

Fig. 7-12

Materials for Supporting the Transmission Line. – The materials used to support the transmission line may be divided into those used to support the line: (1) on the mast, (2) outdoors on the building, and (3) indoors.

(1) On the Mast. – Outdoors, both on the mast and on the building wall, it is considered advisable to keep the transmission line several inches away from any surface. This prevents unbalancing the line, and the resulting increased pickup of unwanted signal and noise. It also prevents excessive losses in wet weather. This requires the use of stand-off insulators. The insulating unit consists of a stand-off wire, bent in a circle at one end (with the opening containing a rubber grommet, through which the line can be passed) with some means for attaching to a mast or wall at the other.

The wire stand-off shown in Fig. 7-13a, is especially designed for use on the mast. It can easily be slipped onto the mast, and then tightened in place by crimping together, with pliers, the small locking clamp provided. The transmission line is effectively insulated from the wire stand-off by means of a rubber grommet. This can be seen in Fig. 7-13b. The grommet fits into the circular outer end of the stand-off, and the transmission line is drawn through it. After the line has been inserted in the stand-off and grommet, a rubber stopper is inserted in the grommet hole

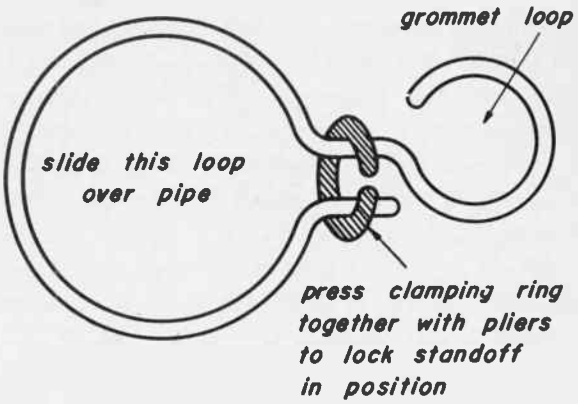

Fig. 7-13 (a)

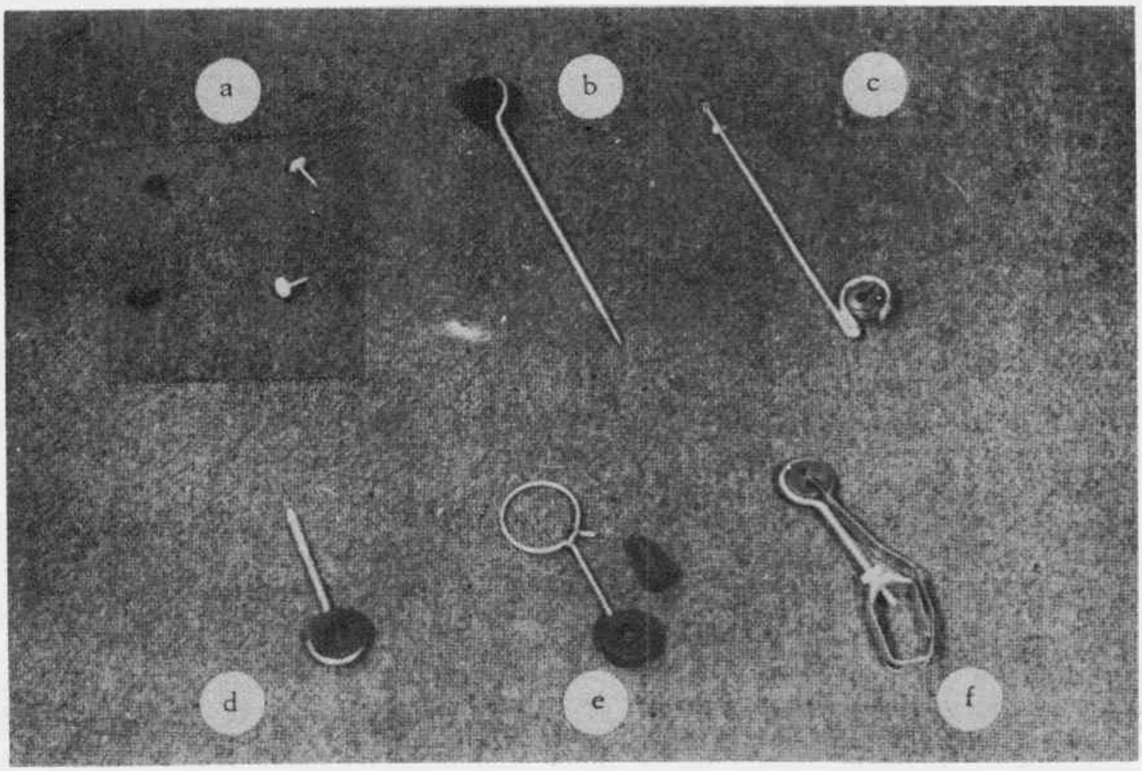

(a) Fibre-headed tack
(b) 7" wood stand-off
(c) 7" nail-it stand-off
(d) 3" wood stand-off
(e) wire stand-off, locking clamp, rubber grommet and stopper
(f) 3" machine stand-off

Fig. 7-13(b)

to hold the transmission line tightly in place. For a line held by several stand-offs, it is general practice to use only two stoppers, one at the top stand-off and the other at the bottom stand-off of a particular section of line. For example, on the mast where three or more stand-offs are used, stoppers are used only on the top and bottom stand-offs. Three sizes of wire stand-offs are available, to allow for different sizes of mast sections: one of these is for use with 1-7/8" mast section; another for 1-5/8" mast section; and still another for 1-3/8" mast section. The locking clamp comes with the stand-off.

Prior to the introduction of the wire stand-off, other types were used on the mast. One was a simple machine stand-off for which a hole had to be drilled in the mast. The other was a similar machine stand-off screwed into a ground clamp attached to the mast. Both of these types are now considered obsolete. They work well, but are either more expensive or take more time to install than the approved wire stand-off type.

(2) Outdoors on the Building Wall. – The type of stand-off required to hold the transmission line in the run along the building wall depends upon the material of which the wall is constructed. On brick or stucco walls, Rawl plugs are needed.

A Rawl plug is simply a small plug made of fibrous material, with a small hole through its center axis. To use it, a hole is drilled into the mortar, stucco or brick with a star drill, and the Rawl plug is driven into the hole. A wood or machine screw can then be screwed into the Rawl plug. This type of anchor is firm enough to hold a transmission line stand-off, but will not hold any line or cable under tension.

(3) Indoors. – Inside the building, it is not usually necessary to use stand-off insulators. The line is held in place by means of special plastic-headed tacks, shown in Fig. 7-13b, driven into the insulation between the two conductors. *Staples or metal-headed tacks should not be used for this purpose.* The use of metal-headed tacks or staples could change the characteristics of the line and introduce losses that could seriously affect picture reception.

It is important to note the following exception to the above procedure. In fringe areas, where the installation man is trying to get all the signal possible, it is unwise to make a long run of transmission line by tacking directly to wood or any other material. In some locations, the absorption of signal is sufficient to make the difference between an acceptable or unacceptable installation.

Materials for Protecting the Transmission Line. – The materials used to protect the transmission line may be divided into three classes; those used to protect the line from: (1) wear or abrasion, (2) weather or excessive moisture, and (3) lightning.

(1) Wear or Abrasion. – Where the transmission line goes over a corner or cornice, enters the building, or passes any point where wear or abrasion could occur, it is necessary to cover the line at that point with some protective material. Usually, a sufficient length of 3/8" loom, or a length of vinylite tubing, shown in Fig. 7-14, is cut and slipped over the transmission line, to cover the exposed part. To prevent the protective covering from slipping, the ends are usually taped in place with suitable tape. The ends should not be sealed however - particularly the lower end. Three types of tape are available: friction tape, rubber tape and Electric Vinyl tape. The latter two are used in locations exposed to weather or moisture.

(2) Weather or Excessive Moisture. – Since exposed electrical connections tend to corrode after a period of time and develop high resistance joints with resultant signal loss, it is desirable to protect antenna-transmission line connections with water-resistant covering. Rubber tape or Electric Vinyl tape serves well for this purpose.

In salt water locations, where spray may cause salt deposits on the line, the entire line may need to be protected. In such cases, either a special transmission line, such as the tubular line, is needed, or else the entire line must be covered by a suitable material. Vinylite tubing can be used for this purpose. More about this in Sec. 7-5.

(3) Lightning. – Out in the suburbs and open country, any structure higher than its immediate

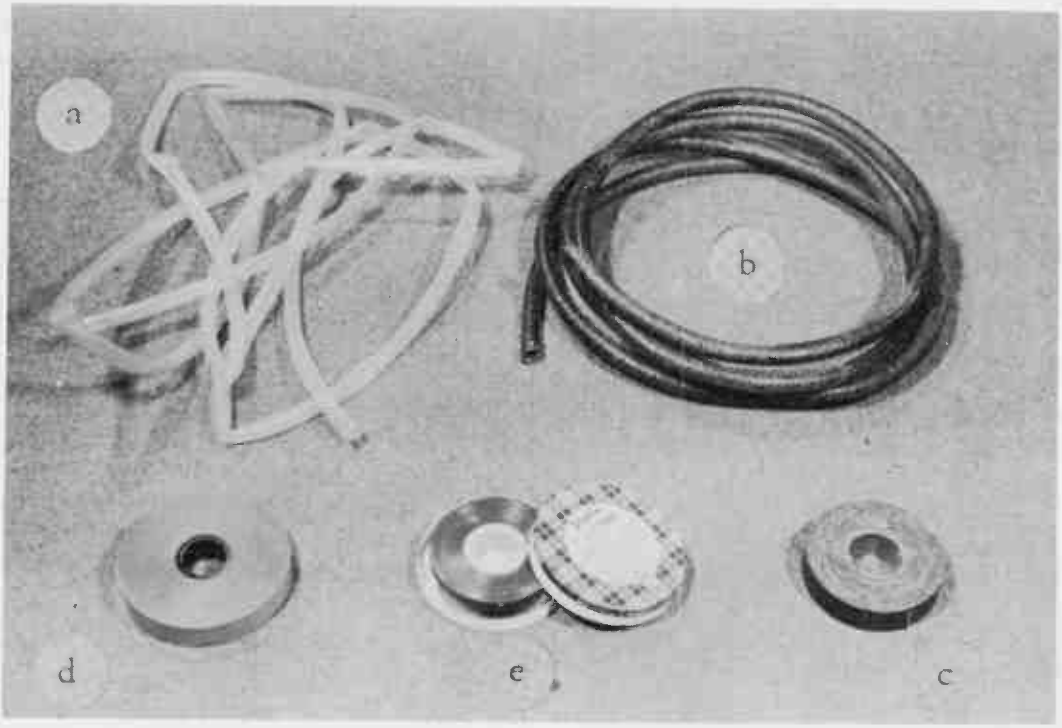

(a) Vinylite tubing
(b) 3/8" loom
(c) Friction tape ½" lb. roll
(d) Rubber tape ½" lb. roll
(e) Electrical Vinyl tape

Fig. 7-14

surroundings is likely to be struck by lightning. In the city, an antenna on a roof top is much less likely to be struck, because there are usually higher structures in the immediate neighborhood that tend to shield it from the lightning stroke. Nevertheless, both in the suburbs and the city, *lightning arrestors must be installed on all television transmission lines.*

With the standard 300 ohm parallel wire line, the danger is not so much from a direct stroke reaching the antenna, but from dangerous static charges being built up on the line as the result of electrical disturbances from nearby storms, rain or snow. In addition to providing the lightning arrestor, there are other specifications of the National Board of Fire Underwriters that must be met for adequate lightning protection – but more about that in Lesson 8.

(Strictly speaking, the lightning arrestor protects the receiver rather than the transmission line, but since it is installed along with the line, it is convenient, for the purposes of this lesson, to classify it with the other protective materials.)

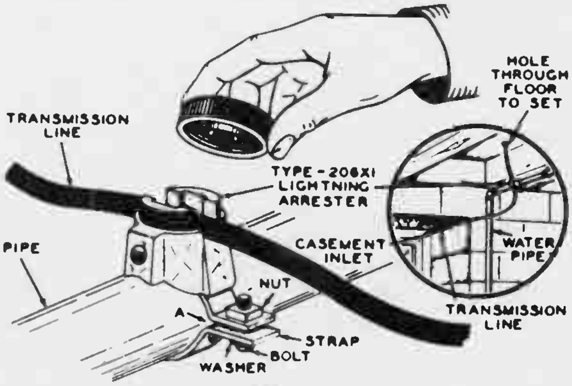

Fig. 7-15 (a)

There are two types of lightning arrestors approved for use. The preferred type is the 206X1 lightning arrestor. This is a molded cylindrical unit, with ground strap attached, and a screw type cap that permits the 300 ohm transmission line to be attached without cutting, soldering or connecting lugs. The unit is designed to match the impedance of the 300 ohm transmission line, and can be used with any flat ribbon line with a spacing between conductors of 0.300" plus or minus 0.015". This arrestor has been approved by the National Board of Fire Underwriters *only when used indoors.*

The other type lightning arrestor is the older, general purpose type shown in (a) of the figure below. When using this type, it is necessary to cut the transmission line, connect arrestor lugs and connect to the arrestor. While this arrestor is more rugged in construction than the newer type, it is rapidly being replaced. In Lesson 8 we will consider in detail the methods of installations of both types of arrestors.

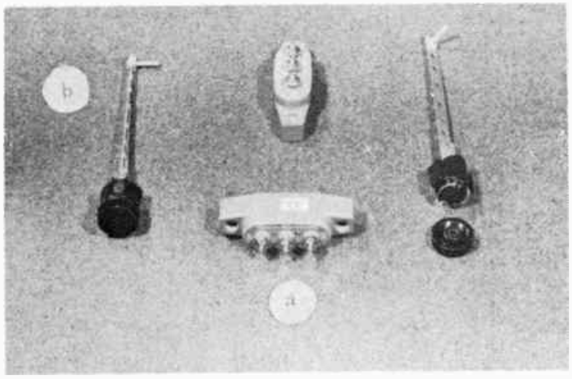

Fig. 7-15 (b)

SPECIAL MATERIAL PROBLEMS

7-5. Since antennas and transmission lines must be installed outdoors where they are exposed to the weather, certain precautions are necessary to prevent breakdown. The installation, of course, must be moisture-proof if it is to work properly when it is raining. The heating and and oxidizing effect of continued exposure to bright sunlight must be considered, particularly as it affects the insulation on transmission lines (polyethylene). But, of greater importance, is the danger of electrolytic deterioration of materials in areas where salt water or corrosive gases are present in the atmosphere.

Electrolytic Deterioration. – When two different metals are in contact and are exposed to moisture, we have a condition similar to that of a galvanic cell, and tiny electrical currents are generated at the points of contact. When this condition occurs in a salt water area or where sulphurous or other chimney stack gases are present, these chemicals (added to the water) form an electrolyte, and the action is speeded up considerably. In this process, one of the two metals is rapidly eaten away by the electrolytic action.

The action occurs only when two dissimilar metals, widely separated in the electro-chemical series, are used. Metals have the chemical property of developing an electro-potential when in contact with water; some show a positive potential and others negative, with each developing a characteristic value with respect to the water or electrolyte. When the metals are listed to form an electromotive series, we find the light metals, such as aluminum and magnesium, high up on the list as electro-positive metals, with the heavier metals, copper, silver and gold, at the other end.

Since aluminum is so high up on the electromotive series, we must be very careful of the metals we use in contact with it. As illustrations of the severity of the galvanic action that can result, there are cases in which brass bolts passing through an aluminum material have had their threads totally eaten away within a very short time.

The amount of corrosion depends on the length of time the junction is wet with condensed moisture, and the degree to which salt or other contaminating chemicals are present. Under normal home conditions, such action is very slight and can be neglected, except in the cellar, where there may be an appreciable amount of moisture. But outdoors it becomes an entirely different matter. Rain and moisture are encountered in practically all localities. In semi-tropical areas, Florida for example, extremely heavy and frequent moisture condensation is likely to occur. Higher temperatures have the effect of increasing the rate of corrosion. In salt water areas, the high moisture content in the air and the salt spray combine to produce a condition that is ideal for causing electrolytic deterioration.

Table D lists common metals in the order of their tendency to corrode in sea water, and the contacting metals which are known to influence

TABLE D

INFLUENCE OF CONTACTING METALS ON THE CORROSION RATE

	(a)	(b)	(c)
List of Metals & Alloys in Order of their Tendency to Corrode	*Metals causing protective, neutral or slight accelerating action*	*Metals causing only a moderate accelerating action*	*Metals which may cause a serious accelerating action*
Magnesium Alloys	Other Magnesium Alloys		Aluminum to Gold
Zinc	Aluminum, Cadmium	Steel to Nickel	Yellow Brass to Gold
Aluminum Alloys (Except Durals)	Zinc to Dural	Steel to Nickel	Yellow Brass to Gold
Cadmium	Zinc to 13% Chrome	Solder to Nickel	Yellow Brass to Gold
Dural (17ST and 24ST)	Zinc to Cadmium	Steel	Lead to Gold
Steel or Iron	Zinc to Stainless	Lead, tin, nickel	Yellow Brass to Gold (Usually)
13% Chrome Stainless (See Note 1)	Zinc to Stainless	See Note 1	See Note 1
Solder (Tin-lead)	Steel to Nickel		
18-8 Stainless Steel (See Note 1)	See Note 1	See Note 1	
Lead	Aluminum to Tin	Copper, Zinc	
Tin	Lead, Solder	Copper, Iron, Nickel	
Nickel	Zinc to Brass	Brass to Silver Solder	Silver or Gold may be serious
Yellow Brass	See Note 2		
Red Brass	See Note 2		
Phosphor Bronze	See Note 2		
Copper	Aluminum, Steel, Lead	Nickel, Tin	
Beryllium Copper	See Note 2		
Bronze	See Note 2		
Monel and "R" Monel	See Note 2		
Silver Solder	See Note 3		
Silver	See Note 3		
Gold	See Note 4		

the corrosion rate. In general, we must be particularly careful of the metals we put in contact with those at the upper part of the list, from magnesium to steel inclusive, since these metals have high corrosion rates under salt water (marine) conditions. Coatings of zinc and cadmium are often used to protect steel or other metals by "sacrificial" corrosion; the protective coating has to be of sufficient thickness for the use intended, and for the time that such protection is required.

In Table D, the first column gives the common metals in the order of their tendency to corrode in sea water. Column (a) lists metals which may be *safely* placed in contact with each of those listed in the first column. Column (b) lists contacting metals which are less safe, but usable, except under outdoor marine conditions. Column (c) lists contacting metals that are *unsafe*.

Note 1: Stainless steel has the position listed when installed in shore areas or where there are contaminating gases. In inland residential areas, stainless steel has a position (in the electromotive series) below Monel metal.

Note 2: Yellow brass and metals below it are unlikely to suffer much by contact with other metals, with the possible exception of silver and gold, under severe conditions.

Note 3: Corrosion of silver and silver solder may be slightly accelerated by gold, under severe conditions.

Note 4: Galvanic corrosion of gold is extremely unlikely, even under severe conditions.

Examination of Table D shows that it would be extremely unwise to have antenna elements, masts or hardware made of aluminum alloys, in contact with brass or any other metal lower in the list. In antenna installations, in fact in any application subject to moisture conditions, contact of such dissimilar metals must be avoided; or else special protective measures must be taken (for example, having the metal coated with cadmium or zinc).

Contact which can result in electrolytic deterioration is most likely to occur where hardware, such as lockwashers and nuts, is used outdoors on bolts or antenna elements. Where the bolts or antenna elements are made of aluminum, it is important to use washers and nuts of the same material. Such items of hardware, available for use on antenna installations, are:

Part No.	Description
. . . . .	Bronze lockwasher
. . . . .	Brass flat washer
. . . . .	Brass hexagonal nut
. . . . .	Stainless steel lockwasher
. . . . .	Aluminum flat washer
. . . . .	Aluminum hexagonal nut
. . . . .	2¼" aluminum bolt
. . . . .	2½" aluminum bolt
. . . . .	2-3/4" aluminum bolt
. . . . .	Galvanized washer
. . . . .	1½" brass screw

Salt Water Hazard. – In salt water locations, in addition to the hazard of electrolytic deterioration, there is the problem of salt depositing on the transmission line and causing serious line losses. To correct this condition, a special transmission line installation is necessary.

There are two approved methods for handling the problem: (1) the use of the tubular parallel wire transmission line, discussed in Section 7-4; and (2) covering the regular transmission line over its entire length with a special flexible Vinylite tubing.

The tubular parallel wire has proved satisfactory where used, but additional experience is desirable. Since it is a new item, it may be in short supply for some time.

The use of Vinylite tubing to cover the regular parallel wire line is the method in general use where trouble is encountered in salt water locations.

Properties and Uses of Protective Vinylite Tubing. – This material is supplied in 250 ft. lengths, wound on individual spools. It is fireproof; does not become very brittle at low temperatures; resists mineral and coal tar solvents; is water-resistant; has a high dielectric strength, even when wet; and has a high tensile strength. The manufacture of this tubing is carefully controlled to meet rigid standards, such as:

Inside diameter	0.375 inch
Wall thickness	0.025 ± 0.003 inch
Tensile strength	3,000 lbs. per sq. inch
Elongation	250%
Fireproofness	Does not support combustion
Life at 150° C	2,000 hours
Resistance to brittleness	Tubing does not shatter when slowly pinched with pliers at 40° F
Color	Clear

The tubing serves as a protective sheath with mostly air insulation. It is, therefore, of particular value for covering the transmission line in any location where salt, dirt, moisture or other accumulation will affect the performance of the line. It also serves as a fireproof covering for parallel wire line where such protection is considered desirable. It can be used in place of loom for protection against abrasion and as mechanical protection when carrying the line through partitions, windows, metal frames, etc.

To insure water tightness and to anchor the covering properly on the transmission line, the methods illustrated in Fig. 7-16 (a, b) should be used.

It is best to avoid squashing or flattening the Vinylite tubing. When attaching the tubing to the parallel wire line, a "core" should be built up on the line to fit the inside of the tubing. This

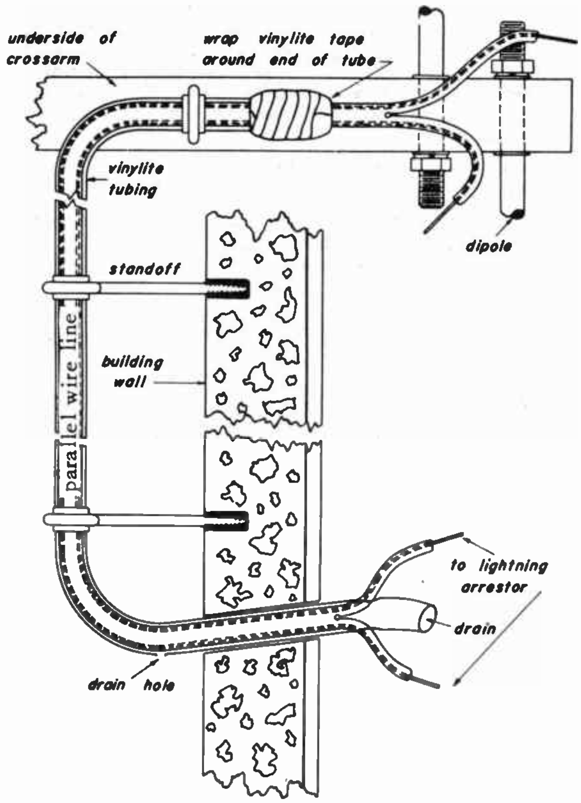

Fig. 7-16 (a)

is done by wrapping 12 inches of Vinylite tape over the line. The tubing should then be forced over this "core" and the joint sealed by wrapping with 6 inches of Vinylite tape, as shown in Fig. 7-16 (b).

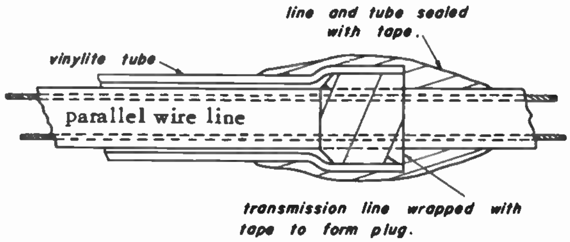

Fig. 7-16 (b)

To anchor the open or unsealed end after it has entered the building, as shown in Fig. 7-16a, the two wires of the transmission line are separated by cutting the polyethylene insulation between them down the center, two holes are cut in the Vinylite covering, and the wires are drawn through these holes. While it is necessary for the covering tubing to be anchored here, it is best not to seal it. If any injury should occur to the covering, permitting moisture to enter, the water could not evaporate or drain out through the bottom if it were sealed. In fact, it is considered advisable to put a small hole at the lowest point in the drip loop to allow moisture to escape and not accumulate at the low point of the line.

INSTALLATION TOOLS

7-6. A list of installation tools considered desirable as permanent equipment with each truck, was given in Sec. 7-2. In addition, each man should have a kit of small hand tools. The following are considered essential:

Soldering iron
Diagonal cutters 6"
Needle nose pliers 6"
Gas pliers 5½"
Screwdriver 4" x 3/16" tip
" 4" x 1/4" tip
" 4" x 3/32" tip
" Philips 6" #2
" " 3" #1
" E-Z Hold
File 8" round
File 6" flat
Set Xcelite nut driver 1/2" to 1/4"
Hammer — ball pien 3 oz.
Penknife
Flashlight
Adjustable end wrench 6"
Set Allen hollow screw wrenches
Tool box

Specific uses of installation tools will be covered in Lesson 8, Antenna Assembly and Erection methods. However, there are some hints on care of the equipment and safety practices that should be considered in this lesson.

Care of Installation Tools. — It is important to have all tools in good shape and ready for use at all times. Rubber shoes missing from the ladder, a dull drill, a chipped screw driver, a broken hammer, or a defective line cord on the power drill not only holds up the completion of a job — but, can be very dangerous!

The first step in the care of your tools is to have a definite place in the truck for each tool. The power drill, sound phones and line cord will not last long if they are just thrown anywhere. Small tools must be kept neatly in compartments or in a cloth toolroll in your tool box.

Periodic inspection of all tools helps to correct faults before they become serious. See that your tools are in good condition, cleaned, oiled and repaired. Check line cords and extension cords daily. Examine the cord and connections carefully before using. Damaged cords, defective plugs and switches may be dangerous. Replace them promptly.

Safety Precautions in Using Tools. – It is always better to be safe than to be sorry. Accidents don't just happen – there is always a definite cause. And too often that cause is the lack of proper care of your equipment, or carelessness in its use. Never get the idea that nothing can happen to you just because you have been on the job for years and nothing has happened yet. *There is no seniority in safety.*

You need to be particularly careful in checking the condition of ladders and electrical equipment, and in their use. Never let up on these safety hints, and you'll stay healthier and live to a ripe old age.

Ladders. – Most ladder accidents are caused by the ladder falling, or by the climber losing his balance and falling. The important things to watch for are:

(1) Make sure the ladder is not defective. If defective, repair it or replace it before you use it again. Make sure that ladder ropes are in good condition.

(2) Use a ladder with safety feet suitable for the floor or ground it stands on. Your ladder has rubber shoes to prevent slipping. Make sure they are on, and in good condition.

(3) If the ground or floor is slippery, tie the ladder at the base.

(4) If the ladder is placed before a doorway, lock the door, or have someone guard it. Where there is any danger of someone bumping into the ladder, be sure that there is suitable protection against any traffic.

(5) Be sure that the ladder is placed at a safe angle against the wall or other solid backing. The angle recommended is about 75 degrees with the horizontal. It works out about right when you set the base of the ladder out from the wall, one fourth the distance to the top support.

(6) Raising and extending a long extension ladder requires extreme care. Wait until the ladder is raised to a vertical position, then extend it. *Be sure to watch where you put your fingers.* To lower the ladder, simply reverse the operation; but first raise the upper section just enough to release the hook, so it can be lowered.

(7) Always face the ladder and hold on with both hands, whether climbing up or down.

(8) Don't carry bulky objects up or down the ladder. Keep your hands free. Carry tools in suitable pockets, or have your tools and other objects hoisted with a rope and bucket.

(9) Never leave tools or other materials where they may slip and fall.

Electrical Equipment. – If you ever had the idea that 110 volts can't hurt you, forget it. Electrical shock is always dangerous; and if it happens when you are in a precarious position, such as on a ladder, you will be in real trouble. There are a number of cases on record where electric drills, used while on a ladder, became shorted and caused bad falls. The shock alone could be serious under certain conditions. Follow these basic rules and you won't be shocked:

(1) Before using any electrical equipment, dry your hands. Make sure that you do not stand on a wet surface. Stay off metal bases, or wear rubber soled shoes.

(2) Keep electrical equipment in good condition. Keep moving parts cleaned and oiled to the extent required.

(3) Use only approved and inspected extension cord.

(4) Do not patch damaged cords. Shorten the cords or get new ones.

(5) Protect the cord against contact with oil, hot surfaces, chemicals or sharp surfaces. These could damage the insulation.

(6) Never hang an extension cord on nails or other sharp edges. Don't let it become kinked or knotted. Never leave it where a truck can run over it. The insulation just won't take such treatment.

(7) Ground portable electric tools, such as your power drill. If a ground has not been built in, it is good practice to use an extra wire to ground the tool casing.

(8) If the grounding connection is made to a water line which includes a water meter, make sure that the line is really grounded. Some water meters are good insulators.

(9) A grounding connection should never be made to a gas or fuel pipe.

(10) Wear goggles while using electric hand tools if there is any danger of flying particles.

(11) Do not overstrain the tool, thus overloading the motor.

(12) Correct promptly such faults as a broken or defective plug, or broken or defective insulation. Any faults that you cannot repair promptly, such as brushes sparking, loose or broken switch, motor overheating, etc., should be repaired in the shop.

Hand Tools. – Careless use of hand tools can be just as dangerous as careless use of power tools or ladders. There is only one way to keep from getting hurt, and that is to develop good habits of checking and using your tools. Some pointers are:

(1) Select the right tool for the job — never use a makeshift.

(2) Use only tools in good condition — no tools with cracked or broken handles or with mushroomed or broken heads.

(3) Keep keen-edged blades sharp; store them safely when not it use.

(4) Do not use a hammer with a hardened face on a highly tempered tool such as a drill, file, die or jog. Chips may fly and endanger eyes or hands.

(5) Never use any tool in such a manner that it can injure you if it slips.

(6) Never leave tools where they might fall and injure someone.

(7) When using a hammer, grasp the handle firmly near the end, keep your eye on the point to be struck, and strike a true blow. Keep the hammer clean and free from oil or grease, which could cause it to slip.

(8 Never use a screw driver with a split or splintered handle.. Always use a screw driver that fits the screw. Dress the point if it is worn, bent or broken.

(9) For electrical work, use screw drivers with insulated handles.

(10) Use wrenches of the right size for the job. Face the jaws of an adjustable wrench in the direction of the pull.

(11) Treat small cuts or bruises promptly. Remember that there is always danger of infection. Use your first aid kit. As soon as possible, have the injury examined by a doctor.

In addition to knowing all the materials and tools you need to carry out the job of installing an antenna, a little time and thought devoted to how to use this material safely pays dividends in time saved and trouble avoided. Safety is largely a personal matter. Throughout the lessons of this Course, we will continue to point out possible hazards and to give safety hints. But they won't be worth much unless you study them carefully, and apply them to what you personally do on the job. That means to consistently try to improve your habits of checking materials and tools *before using them*, and then following all recommended precautions in their use.

ADDITIONAL SAFETY PRECAUTIONS

Throughout all the lessons of this Course there will be references to desirable safety precautions, wherever they fit in. Since this is the only lesson in which direct reference is made to the truck in which installation material is carried, this is the logical place to stress truck safety — particularly the prevention of fires.

Prevention of Motor Vehicle Fires. — Careful observance of the following rules should prevent truck fires:

1. Always turn off your engine promptly after driving up to a gas pump. Never smoke while refueling.
2. Do not smoke or use an open flame when looking into the gas tank, the radiator or the battery.
3. When smoking in the vehicle, put matches and butts in the ash tray, if one is provided. If not, make sure matches and butts are "dead" before throwing them from the vehicle.
4. Check the carburetor and the fuel line frequently for dripping gasoline. See that the carburetor does not overflow on the exhaust manifold.
5. Loose or broken gaskets, exhaust pipes and mufflers should be repaired without delay.
6. Have the insulation of wiring checked frequently to avoid short circuits.
7. Keep the motor and dust pans free from oil, grease and dirt. Do not carry oily rags, waste or other flammable objects under the hood or elsewhere in the vehicle where combustion might occur.
8. Have accumulated grime and grease on brake shoes and drums removed promptly.
9. Inspect all parts of the truck frequently for any defects or conditions that might in any way represent a fire hazard — and correct such conditions promptly.

Motor Vehicle on Fire. — Given a few seconds start, an oil or gasoline fire may become difficult to handle. Here's what to do in any emergency:

1. Turn off the ignition and lights immediately.
2. Avoid stopping the vehicle near combustile materials or where fire will endanger lives.
3. Use your fire extinguisher. Apply it through the louvres for engine fires. Don't raise the hood unless such vents are not provided on your truck.
4. If your extinguisher is not accessible (and you should be careful to see that it is always in your truck and ready for use), smother the flames with a tarpaulin, blanket, coat, or other hand covering. Sand or dirt (preferably wet) will do.
5. Never throw water on a gasoline or oil fire. This would spread the flames.
6. After the fire is out, do not drive the truck until the cause of the fire is determined. A short circuit might start the fire anew when the ignition or lights are turned on.

Report of Motor Vehicle Accident. — The driver is expected to know and to follow all motor vehicle traffic regulations and safety practices. There are two desirable rules that should be observed: (1) no riders, and (2) when backing the vehicle, make sure that the way is clear before proceeding. Make sure that there are no children around or under the vehicle.

When an accident occurs it is important that a full report be made as soon as possible. An envelope with printed instructions and all necessary forms should be available in the truck. Examples of the forms are shown below.

Some of the points to keep in mind are:

1. Fasten the envelope (containing instructions) *securely* in your truck.
2. Read and learn how to use the enclosed forms:
   Driver's Report of Accident
   Witness Card
   Emergency Request for road help
   Driver's Exoneration Card
   Claim Representative Directory
3. When an accident occurs, the Driver's Report must be filled out in detail at the scene of the accident.

   Obtain the signatures of all witnesses on the provided Witness Card.

   If possible, have the other driver or person involved sign the Exoneration Card. This is *your protection*
4. These cards should be turned over promptly to your immediate superior.
5. In case of a severe accident, telephone or wire the nearest Insurance Company representative.
6. No driver of any motor vehicle or trailer owned or controlled by the Company shall permit any person not on our payroll to ride thereon, or shall any driver use such equipment for other than Company business.
7. Do not argue or discuss the responsibility of the accident with anyone.

IF YOU HAVE PLANS FOR TOMORROW BE CAREFUL TODAY.

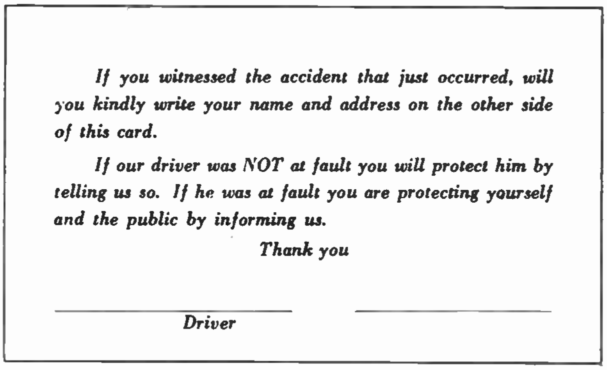

If you witnessed the accident that just occurred, will you kindly write your name and address on the other side of this card.

If our driver was NOT at fault you will protect him by telling us so. If he was at fault you are protecting yourself and the public by informing us.

Thank you

______________ ______________
Driver

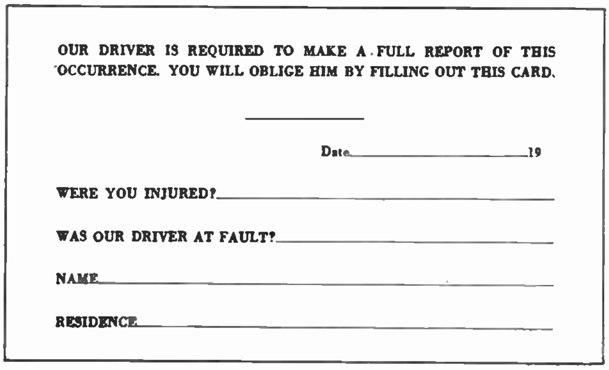

OUR DRIVER IS REQUIRED TO MAKE A FULL REPORT OF THIS OCCURRENCE. YOU WILL OBLIGE HIM BY FILLING OUT THIS CARD.

____

Date______________**19**

WERE YOU INJURED?______________

WAS OUR DRIVER AT FAULT?______________

NAME______________

RESIDENCE______________

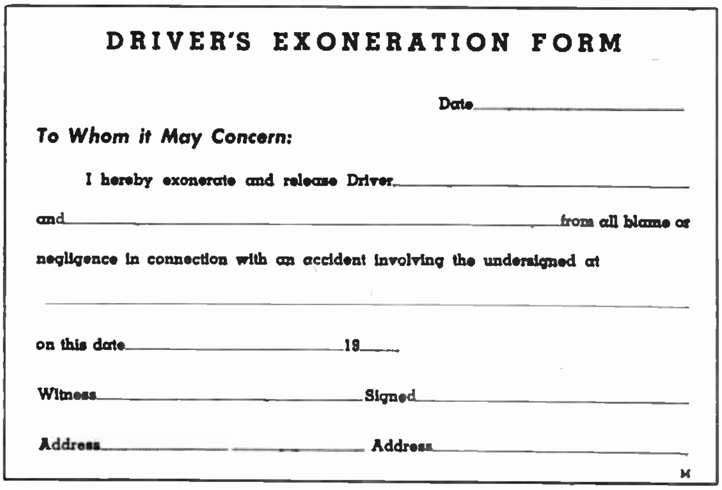

DRIVER'S EXONERATION FORM

Date______________

To Whom it May Concern:

I hereby exonerate and release Driver______________

and______________**from all blame or**

negligence in connection with an accident involving the undersigned at

____

on this date______________**19**____

Witness______________**Signed**______________

Address______________**Address**______________

M

Fig. 7-17

LIST OF INSTALLATION MATERIALS

Part No.	Description
. . . . .	Antenna
. . . . .	Antenna
. . . . .	Bracket
. . . . .	Peaked roof bracket
. . . . .	Band #2 folded dipole and reflector (complete kit)
. . . . .	Band #3 folded dipole and reflector (complete kit)
. . . . .	Band #4 folded dipole and reflector (complete kit)
. . . . .	Band #5 folded dipole and reflector (complete kit)
. . . . .	Band #7-#13 folded dipole and reflector (complete)
. . . . .	Telrex - 4X - TV antenna kit
. . . . .	High frequency antenna
. . . . .	Matching Harness (3 Section Line)
. . . . .	Junction Terminal Block for Harness
. . . . .	Capacity loaded dipole (indoor)
. . . . .	Extended rod V-type antenna (indoor)
. . . . .	Oak Ridge Pre-assembled folding type
. . . . .	Channel Master Pre-assembled folding type
. . . . .	Channel #2 — matching element kit
. . . . .	Channel #3 — matching element kit
. . . . .	Channel #4 — matching element kit
. . . . .	Channel #5 — matching element kit
. . . . .	Wings (4)
. . . . .	Dipole Rods (2)
. . . . .	Gyro-Tenna — window type antenna
. . . . .	Antenna terminal lug
. . . . .	Receiver spade lug
. . . . .	Arrestor terminal lug
. . . . .	"S" Hook
. . . . .	Bronze lockwasher
. . . . .	Brass flat washer
. . . . .	Brass hex nut
. . . . .	Stainless steel lockwasher
. . . . .	Aluminum flat washer
. . . . .	Aluminum hex nut
. . . . .	2¼" Aluminum bolt
. . . . .	2½" Aluminum bolt
. . . . .	2¾" Aluminum bolt
. . . . .	D.P.D.T. switch
. . . . .	Connector
. . . . .	Mast clamp
. . . . .	U-Bolt for #225 and folded dipole
. . . . .	Lightning arrestor (indoor)
. . . . .	Lightning arrestor (outdoor)
. . . . .	Grommet
. . . . .	Plastic-headed tack
. . . . .	Rubber stopper
. . . . .	Rubber mast bushing
. . . . .	Rubber mast bushing
. . . . .	3" Wood stand-off

Part No.	Description
. . . . .	3" Machine stand-off
. . . . .	7" Wood stand-off
. . . . .	7" Machine stand-off
. . . . .	Transmission line (Twin Lead)
. . . . .	Heavy transmission line (Twin Lead)
. . . . .	Vinylite tubing
. . . . .	Twinex transmission line
. . . . .	Co-axial Transmission Line
. . . . .	Tubular Amphenol
. . . . .	Std. 1-3/8" Dural tubing — 12' length
. . . . .	Special 1-3/8" Dural tubing — 12' length
. . . . .	Special 1-5/8" Dural tubing — 12' length
. . . . .	Special 1-7/8" Dural tubing — 12' length
. . . . .	Special 2-1/8" Dural tubing — 12' length
. . . . .	Std. 1-3/8" Dural tubing — 8' length
. . . . .	1" x 2" Spacer block
. . . . .	2" x 2" Spacer block
. . . . .	1½" x 2" Spacer block
. . . . .	Strap for Stand-off Wall Bracket
. . . . .	Bracket for Stand-off Wall Bracket
. . . . .	Ground rod
. . . . .	Alum. ground wire
. . . . .	Ground strap (clamp)
. . . . .	Galvanized guy wire
. . . . .	Thimble
. . . . .	1/8" Cable clamp
. . . . .	¼" x 2-1/8" Turnbuckle
. . . . .	5/6" x 2-5/8" Turnbuckle
. . . . .	U-Bolt
. . . . .	Galvanized washer
. . . . .	5/16" x 1½" Lag screw
. . . . .	¼" x 1½" Lag screw
. . . . .	¼" x 3" Lag screw
. . . . .	¼" x 4" Lag screw
. . . . .	Expansion shield
. . . . .	¼" x 3" anchor bolt
. . . . .	¼" x 4" anchor bolt
. . . . .	Lead cone
. . . . .	Lead sleeve
. . . . .	Rawl plugs
. . . . .	1½" Brass screw
. . . . .	5/16" x 1¼" Hexagonal machine bolt
. . . . .	Pipe strap for 2-1/8" pipe
. . . . .	Pipe strap for 1-3/8" pipe
. . . . .	Pipe strap for 1¼" pipe
. . . . .	Pipe strap for 1½" pipe
. . . . .	3/8" Loom
. . . . .	Wire stand-off for 1-7/8" mast
. . . . .	Wire stand-off for 1-5/8" mast
. . . . .	Wire stand-off for 1-3/8" mast
. . . . .	Locking clamp for wire stand-off
. . . . .	3½" "nail-it" type stand-off

LIST OF INSTALLATION MATERIALS *(Cont'd)*

Part No.	Description	Part No.	Description
.....	7" "nail-it" type stand-off	.....	Matching transformer (indoor)
.....	1-3/8" Guy ring	.....	FM wave trap
.....	1-5/8" Guy ring	.....	19.75 MC wave trap
.....	1-7/8" Guy ring	.....	27.75 MC wave trap
.....	Junction box for 4 lines	.....	Antenna base assembly
.....	Junction box for 3 lines	.....	Carbon tetrachloride — qt.
.....	Junction box for 2 lines	.....	Friction tape ¾" — lb. roll
.....	Fuse	.....	Friction tape ½" — lb. roll
.....	Wave trap	.....	Rubber tape ½" — lb roll
.....	Waterproof matching transformer (outdoor)	.....	Electric Vinyl tape
		.....	

◆

NOTES

NOTES

TELEVISION SERVICING COURSE

PREPARED BY

RCA INSTITUTES, INC.
A SERVICE OF RADIO CORPORATION OF AMERICA

HOME STUDY DEPARTMENT
350 West 4th St., New York 14, N. Y.

LESSON EIGHT

ANTENNA ASSEMBLY AND ERECTION METHODS

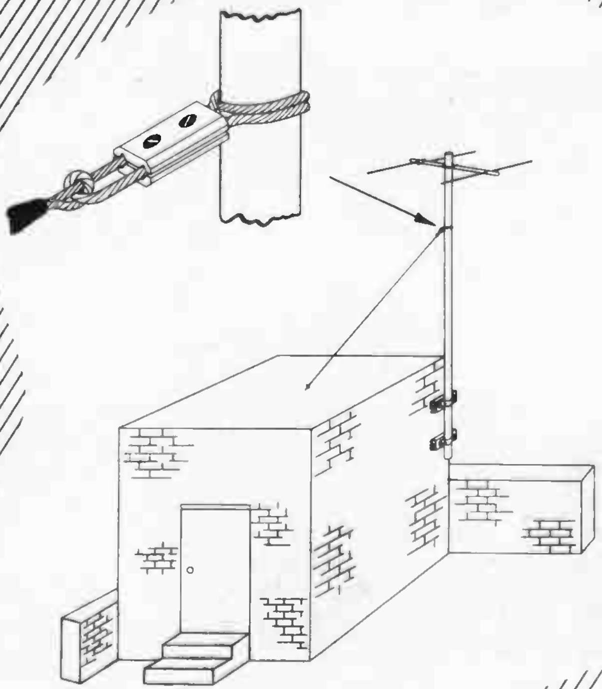

Lesson 8

WHAT IS A GOOD ANTENNA INSTALLATION ?

8-1. In Lesson 6 we studied the electrical and mechanical characteristics of the antenna types used in TV installations. Lesson 7 detailed for us the materials and tools used to hold the antenna and transmission line in place. The next step is to study how these materials and tools are used in assembling and erecting the antenna. That is the job of this lesson. The procedures to be presented have been worked out in actual practice, and have been found to provide the most dependable results over a reasonable period of time, as well as meeting Fire Underwriters' requirements and similar restrictions.

In the following lessons we'll apply what we've learned to actual installation problems in various situations, and learn how to choose the antenna, and plan the installation for each job.

To be considered a good antenna installation, the completed job must not only give good electrical results, but it must also be mechanically sturdy, it must look well, and it must be in accordance with local legal regulations and Fire Underwriters' requirements.

Importance of a Sturdy Structure. – Whatever the antenna type decided upon, it must be so constructed and erected that it will not fail in bad weather. In addition to the time, money, and energy expended in replacing an antenna that fails, such failure could cause property damage and personal injury.

The mechanical structures of the various antennas approved for use in most installations have been designed to withstand the strains and stresses that are likely to be encountered under storm or icing conditions. But no antenna will hold up well and give good service unless the installation is the result of a good job of assembling and installing the antenna, mast, mount, transmission line, lightning arrestor, and all other accessories needed to complete the installation.

If you can produce antenna installations that do not fail – even under hurricane conditions – it will prove the excellence of the installation work.

Antenna installations can be divided into two groups, *standard* and *special.* Examples of these are described below.

Standard Installations. – A *standard* antenna installation includes a section of mast of standard length (at present this may be 5, 8 or 12 ft.); an antenna, consisting of a dipole, or dipole with reflector, or folded dipole with reflector and a high frequency element, installed only where necessary; required mounting brackets; up to 100 ft. of parallel wire transmission line; lightning arrestor; insulators; and accessories.

Examples of *standard* installations are shown in Figure 8-1. While a great many combinations of different types of antennas and mounts are possible, we show only two as typical installations which you are likely to be required to make.

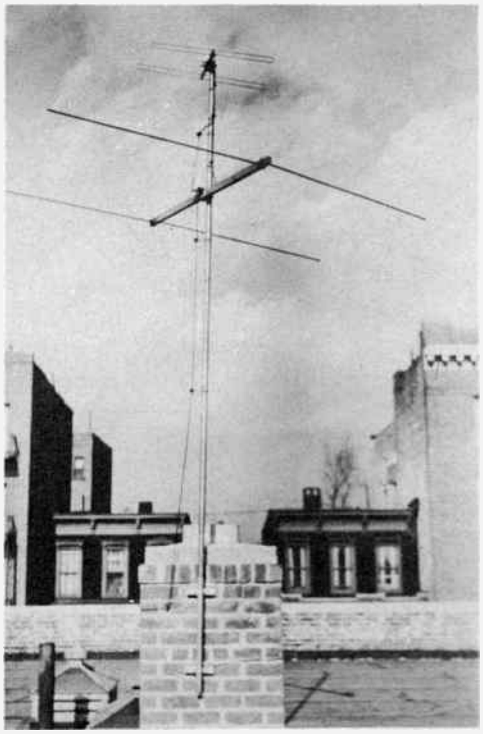

Fig. 8-1(a)

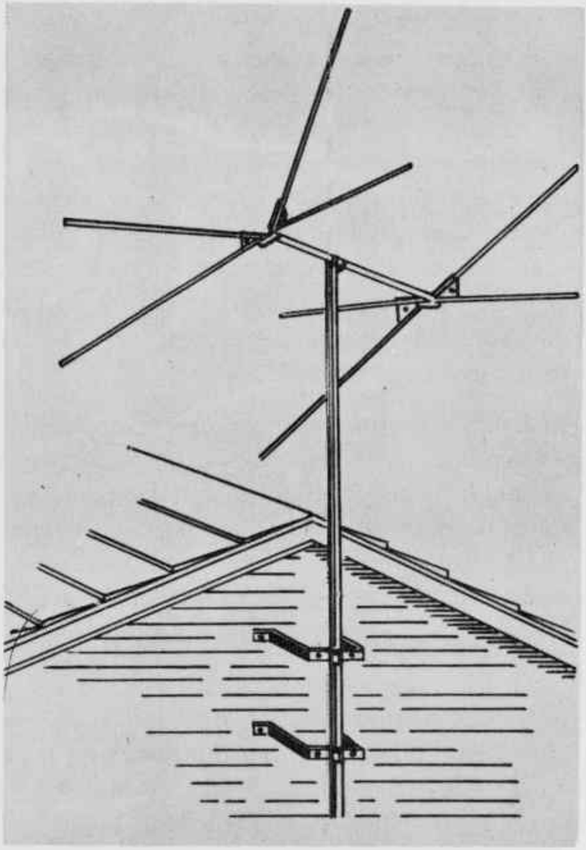

Fig. 8-1(b)

Special Installations. – Any variation from a *standard* installation, that requires additional material, or that presents special problems in installation, would be considered as a *special* installation.

Examples of *special* installations are shown in Figure 8-2. Here, too, a great many combinations are possible. We show: (a) an otherwise *standard* installation, but with a co-axial cable transmission line; (b) a stacked array antenna installed on a tall mast with two sets of guy wires.

The type of antenna to be installed at a given location is an electrical problem that depends on the strength and cleanness of the signal at that particular place. The required height for the mast is similarly determined, since in most (though not all) cases, raising the antenna higher above ground results in a stronger and sometimes cleaner signal. How to decide these points will be discussed in detail in Lessons 9, 10 and 11.

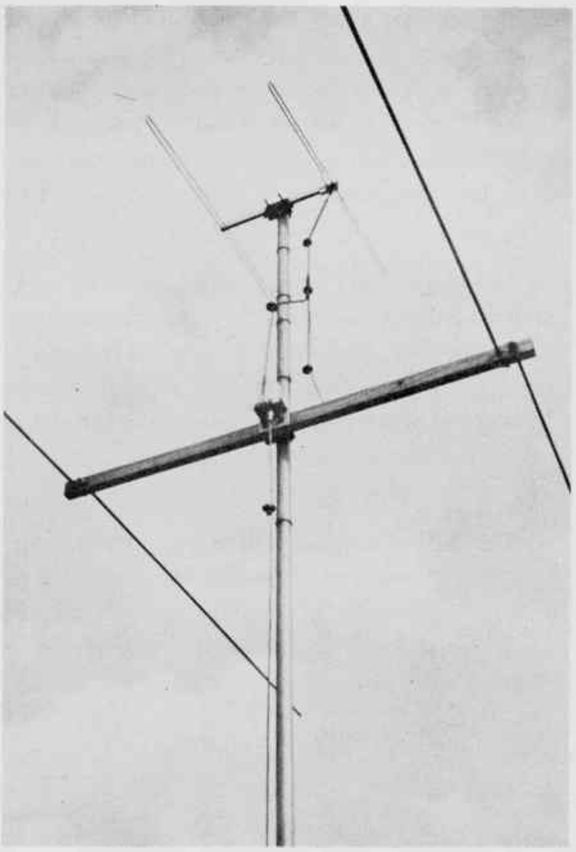

Fig. 8-2(a)

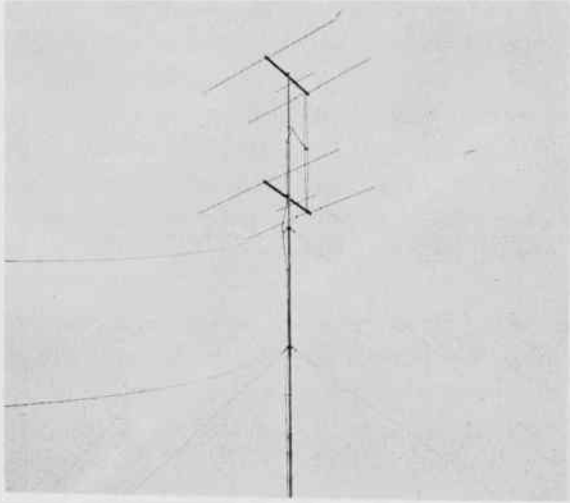

Fig. 8-2(b)

The Antenna Mounting Problem. – How to erect the mast and hold it securely in place, however, is a mechanical problem. It depends on the site on which the mast must be installed. Since that site could be a chimney, parapet, wood or brick wall, or a flat or peaked roof, a number of types of mounts are available to fit each particular need. Just picking the right mount is not enough. There is a right and wrong way to use each one.

Additional procedures that must be clearly understood are methods of erecting and guying the mast; installation of a *standard* transmission line; the use and installation of a lightning arrestor; the grounding of the mast; and the general structural precautions necessary for a good, safe and sturdy job.

The matter of safety deserves special emphasis. Safety measures must be followed to prevent anyone from being hurt, including yourself. There are hazards to look out for, and a preferred way of doing each job.

BUILDING MATERIALS AND CONSTRUCTION

8-2. The type of antenna selected for installation at a given location, and the height of the mast required, will influence the kind of support needed for a sturdy installation. Of equal importance is the nature of the material of which the roof or the building is constructed. The best supports devised will not provide a good installation if they're put up on a crumbling chimney, a weak roof or a wall structure in need of repair. It is important, in setting up an antenna, to have it rest on a firm foundation, so that the resulting structure will be sturdy, and give satisfactory reception for a long time.

Roof Structures. – It is not good practice to mount the antenna directly on the roof. Whenever possible, it is preferable to mount it on some other structure, such as a chimney, a parapet, or a wall of the building. However, there are some instances, on flat roofs or peaked roofs, where it becomes necessary to fasten the mount directly to the roof. In fact, in some localities – Baltimore for example – it is illegal to mount antennas on chimneys or parapets where the antenna may protrude over the edge of the building. Here a roof mount becomes mandatory, for an outdoor installation.

The danger in mounting directly on the roof results from the fact that it may be necessary to penetrate into the roof material with lag screws or anchors. In puncturing the roof surface, a condition may result in which rain may seep in and cause damage. There are legal problems involved, too. Many roofing material companies guarantee a roofing installation for a long period of time. If you break through the roof seal and the roof leaks, you and your company then may be liable for any damage.

Even if the roof has not been guaranteed by the roofer, it is best to avoid the possibility of causing a leak. You will probably have to step on to the roof to get your job done. Therefore, you must know enough about roof structures to know what to watch out for, to keep out of trouble.

A roof structure consists of three essential parts: the supporting structure, the insulation, and the waterproof roofing material on the outside. You cannot fasten anything securely to the outside roofing material; that is, the tarred paper covered with shingles, tile or slate. You have to get down below that layer (and sometimes it is several layers), past the insulating material that lies underneath the roofing material, down to the supporting structure that is a part of the building frame. This supporting structure may be of wood, concrete or steel. Figure 8-3 shows several types of roofing structures.

In private homes, and even small apartment houses, the roof support is usually a wooden structure. Large apartment houses and commercial buildings normally have a roof structure of concrete or steel plates underneath the insulating material and the outer waterproof covering.

To fasten an antenna mount or the anchors for guy wires to the roof, it is necessary to penetrate all the way down to the support, in order to be sure that the mount will hold. For a wooden structure, you need lag screws long enough to penetrate into the building structure to a sufficient depth to hold. For a concrete structure, you would have to penetrate to the concrete, and make a hole in it deep enough to hold an expansion bolt. For a steel structure, you would have to penetrate to the steel plate and drill a hole in it to hold a long machine screw. And when you are sure that the lag screw, the anchor

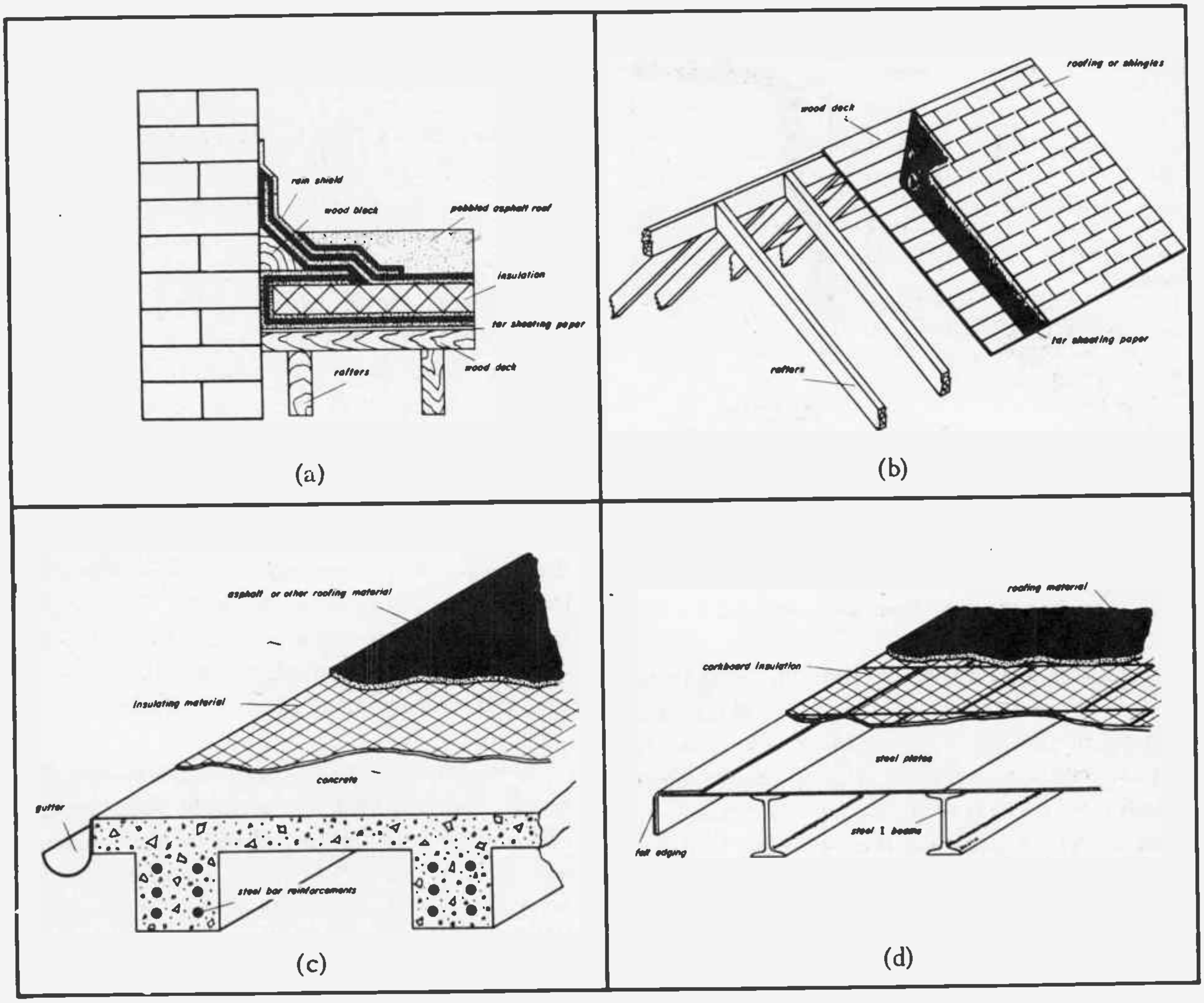

Fig. 8-3

bolt or the machine screw holds firmly in the roof support structure, you must then carefully fill in any space around the holding screw or bolt, and seal the opening completely with a roofing compound. That last point is very important. Any time you break through the roofing material, you *must seal* that opening so that the roof is again waterproof.

Breaking through the roofing material must be avoided if possible. It is permissable only when *no other means* of mounting the antenna is available.

Wall Structures. – A sturdy antenna installation requires that the mount be fastened directly to the building structure. This is much more easily done on a wall of the building, than on the roof. The most common wall structures encountered in urban areas are wood or brick; however, other building wall types frequently met with are stucco, brick or stone veneer, tile, cement block, and stone. When we consider the problems of installation, these will be classified into four main types: (1) wooden walls, (2) veneer covering (brick, stone, or stucco) on a basic wooden wall, (3) hollow material walls (building tile or cement blocks), and (4) solid material walls (brick, stone, or concrete). Examples of these types of wall structures are shown in Figure 8-4 (a, b, c, d).

Wood Frame Wall. – Figure 8-4 (a) shows the basic structure of a wooden wall. If we were to take the wall apart, the successive layers would be an outer covering of *siding or shingles*, then a layer of *waterproofing* material (tar paper), then

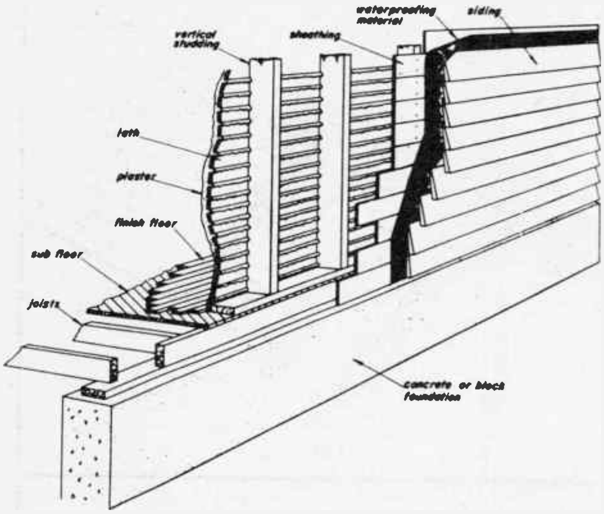

Fig. 8-4 (a) Wood frame wall.

a layer of closely fitted flat boards, designated as tongue and groove *sheathing,* which are fastened to the vertical *studding.* The vertical studding consists of 2" x 4", or larger, wood members called *studs.* It is the basic frame, or structure which supports the upper part of the building.

While the antenna mount may hold temporarily if fastened to the wooden sheathing or siding at any point on the wall, a much more secure mount is obtained by fastening directly to a vertical stud. Studs are usually spaced 16 inches apart (center to center), so you can usually find one close to where you want to put the antenna mount.

Veneer Walls (Brick, Stone, or Stucco). – A veneer wall, just as the name implies, has a thin *veneer,* or outer covering, on a wooden framework of vertical studding used to support it. In some cases, there is an inner wood siding between the outer veneer and the studding. Where this is so, lag screws that penetrate into and hold in the wooden frame may be satisfactory for fastening the antenna mount at any point on the wall. But in many cases, particularly with stucco, the veneer is held in place on a framework of wood or metal lath fastened to the vertical studding. In such cases, it is best *not* to fasten the mount to the stucco wall, since there is danger of cracking the stucco. In general, however, it is best to fasten any external structure directly to the studding, to obtain the sturdiest installation – one that will hold up under adverse conditions.

Solid Material Walls, (Brick, Stone, and Concrete). – Brick, stone, or concrete walls, whether they support the building alone, or in conjunction with a steel framework, have a sufficient thickness to take an expansion anchor of some type which will hold in the wall material. Incidentally, chimneys are included in the classification of solid material walls, since they may be considered as extensions of the building structure. Brick or stone walls of the veneer type, however, are often quite flimsy. In such cases, the mount

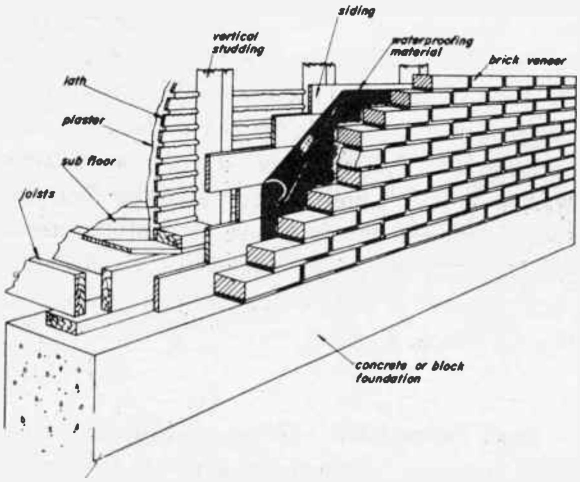

Fig. 8-4 (b) Brick veneer wall.

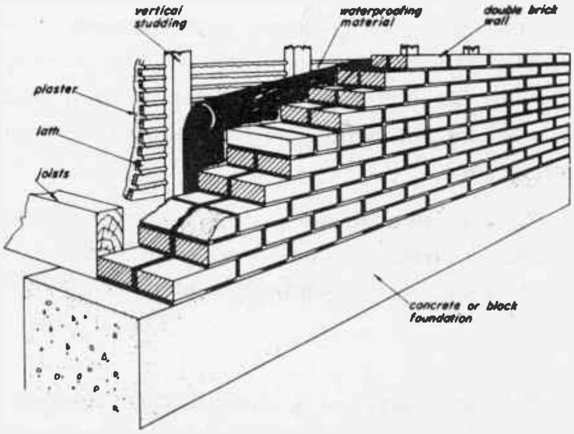

Fig. 8-4 (c) Solid brick wall.

should be on the roof and only stand-offs fastened on the wall.

Hollow Material Walls. – We run into a different problem when the wall is made of hollow tile or cement block. A hole drilled in such a wall may penetrate into a hollow section of a block. It then becomes necessary to use a *wing toggle bolt* or a *toggle screw anchor* to fasten the mount.

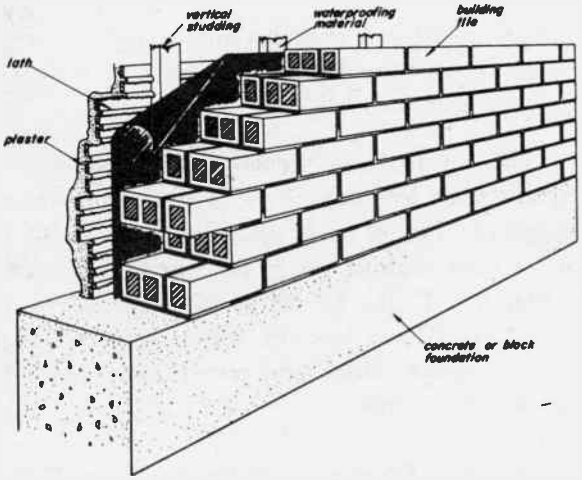

Fig. 8-4 (d) Hollow tile wall.

These can be inserted into the hole, where the toggle section will open and hold securely when the bolt is tightened. Of course, the hole must then be sealed to make it waterproof.

MOUNTS AND ANCHORING METHODS

8-3. Before determining the location for the antenna, and the particular type of mount to use, it is necessary to make a preliminary inspection.

The type of mount selected will of course depend on the kind of site selected for the antenna installations. Purely from the mechanical point of view, the order of preference is: (1) chimney, (2) building wall, (3) peak roof, (4) flat roof. However, more important factors are: (1) accessibility of the site, (2) best position for the line run to the receiver, and (3) the customer's preference.

Mounts for Chimney Installations. – There are two methods in common use by most companies, for chimney installations. These are: (1) the use of *pipe straps* and spacer blocks with expansion bolts, and (2) the use of *chimney straps.* The pipe strap and spacer block method has been standard for some time, but is now being replaced by the chimney strap. While the chimney strap is more expensive, this cost factor is compensated for by the time saved using this simpler method. Due to the fact that it has a compression effect on the chimney, and tends to hold the bricks in place, it can be used on chimneys that are in only fair condition. By contrast, the expansion bolts used with pipe straps tend to split and loosen the bricks.

A typical pipe strap and spacer block chimney installation looks like this:

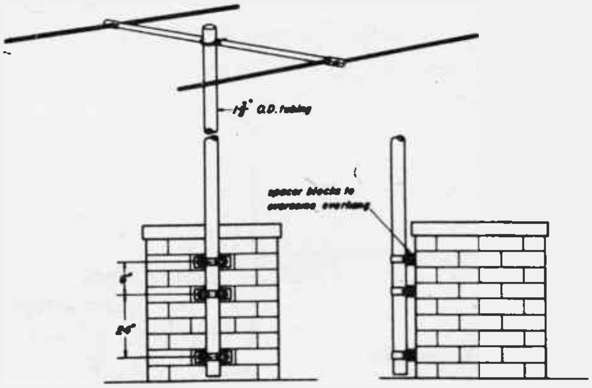

Fig. 8-5

Either two or three pipe straps are used, depending on the height of the mast. For an 8 ft. or a 12 ft. mast, two straps are sufficient; three are required for taller masts. The width of the spacer blocks brings the mast out far enough from the chimney wall to clear the overhang at the top usually encountered, as shown in Figure 8-5. If the overhang is not cleared, an additional set of spacer blocks may be used; but that requires the use of longer expansion bolts – and there's a limit to how long a bolt is practical.

Installing Pipe Straps. – The big disadvantage of the pipe strap and spacer block method is the time and effort required to make the mount hold firmly in the chimney brick. Holes deep enough to hold expansion bolts must first be drilled. This can best be done with a power unit and a carboloy drill. A star drill and hammer can be used for the job, but this is tedious work, and the repeated blows may loosen the brick to a dangerous extent.

In drilling the hole, avoid splitting or chipping the brick. This requires drilling in the center of the brick, not near any edge. Drill deep enough for two sleeves and cones. *Holes for antenna mounts are never drilled in the mortar between bricks.*

The expansion bolt is then installed so that it will hold firmly. This means that the hole must be deep enough, cleaned thoroughly, and the expansion bolt installed properly. The expansion bolt is inserted in the hole, and its lead sleeve is expanded by driving it in with a tamping tool and hammer. Additional lead cones and sleeves are added and tamped in, to fill the space in the hole to the top, so that the bolt is held firmly. Each unit is tamped separately, to insure a tight fit. See Figure 8-6.

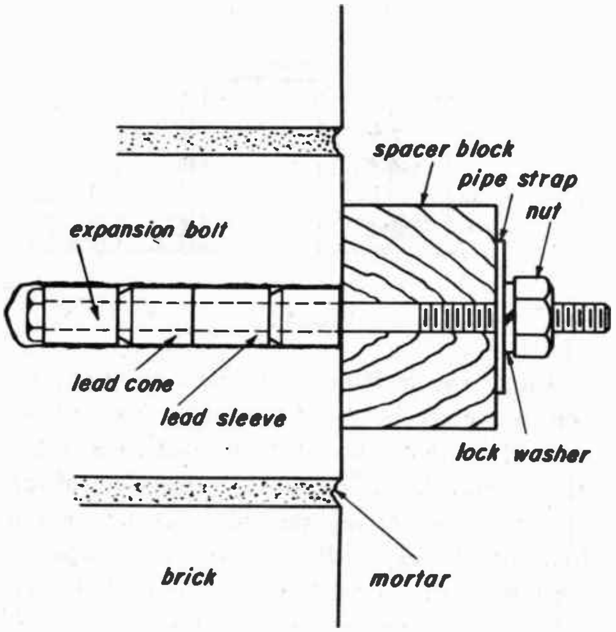

Fig. 8-6

Two such expansion bolts must be installed for each pipe strap. It is necessary that the holes be properly positioned, so that the bolts will fit the pipe strap holes, and the pipe straps will be lined up to hold the mast in a true vertical position. When two straps are used, they are spaced approximately 24 inches apart. When three are used, the third is placed above the other two, about 6 inches higher, as shown in Figure 8-5 It is important to remember that different size pipe straps must be used for different sizes of mast, and that the holes must be spaced accordingly.

The spacer blocks come with holes already drilled. The blocks are slipped over the anchored bolts, the mast is placed in position, the pipe straps are slipped over the bolts to hold the mast in place, and are held tightly by a lock washer and nut over each bolt.

The installation, properly made, provides a sturdy structure, capable of withstanding strong winds of 75 to 90 miles per hour, for masts of 12 ft. or less, without using guy wires. For masts taller than 12 ft., guy wires are required. It is also desirable to rest the bottom of a tall mast on a wooden block, to prevent any possible damage to the roof.

Installing Chimney Strap Mounts. – Installation of a chimney strap mount is a great deal easier than the pipe strap method, since no holes need to be drilled. Besides, the chimney strap is less of a hazard to the chimney. There is no danger of bricks being pulled out in a high wind. In fact the strap strengthens the chimney.

There are a number of different types of chimney straps now in use. One type is the chimney bracket assembly shown in Fig. 8-7.

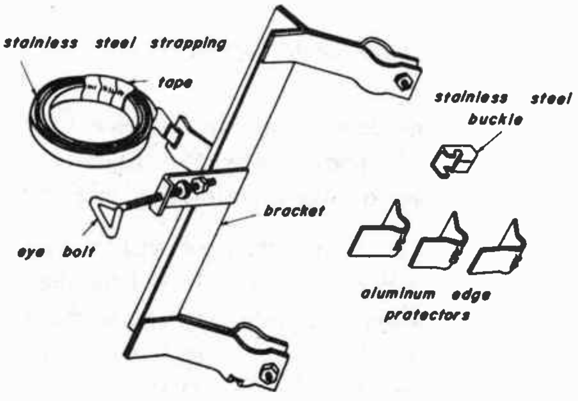

Fig. 8-7

This is made up of the following parts, which are shipped together as a unit: one bracket with ten feet of stainless steel strapping attached; one stainless steel eye bolt with nut and lock washer attached; one stainless steel ¾" buckle; and three aluminum edge protectors. The strapping is held together in a small roll with a strip of tape, until ready for use.

The bracket which is to hold the mast fits on a corner of the chimney. The first thing to do in an installation is to decide which corner of the chimney is nearest to the transmitters, since that is the corner on which the bracket should be placed. This is desirable in order to keep antenna and transmission line connections away from the opening, where they are constantly exposed to chimney gases, which could cause corrosion and electrolytic deterioration, as explained in Lesson 7. Another factor that needs to be considered in choosing the corner on which to place the bracket, is the most convenient routing of the transmission line.

The recommended procedure to follow in setting up the mount is:

1. Remove the tape and unroll the strapping.
2. Slide the free end of the strap through the slot of each edge protector, and space them so that each one is approximately in the position it will occupy when the strap is in place around the chimney.
3. Feed the strap through the stainless steel buckle, so that the "ears" on the buckle will be toward the free end of the strap, and projecting *outward* from the chimney.
4. Adjust the nut on the eye bolt, so that the nut is flush with the end of the eye bolt. This allows the maximum take-up.
5. Pass the large loop, formed by the strapping with all parts attached, over the chimney, as shown in Fig. 8-8. Remember that the mast must rest on *lances* (crimped ledges) at the bottom of the bracket. Be sure that the bracket is not upside down.
6. Now pass the strapping through the eye bolt, from the chimney outward. Next, place the bracket in position on the chimney, and adjust the edge protectors so that each rests on two bricks, as shown in Fig. 8-9 (b), on the next page.
7. With a pair of pliers, pull the strapping as tight as possible, and bend the strap around the eye bolt, and in against the inside strap. At this stage, the buckle should look like Fig. 8-9 (c).
8. Cut off the excess length of the strap, three inches from the eye bolt, press the projecting end of the strap firmly against the inside strap, and slide the buckle over it and up against the eye bolt.
9. Bend the strap back over the buckle, and in between the ears. Bend both ears down tightly against the strap, using pliers for that purpose. The arrangement of the strap through the buckle now is as shown in Fig. 8-9 (d).
10. Adjust the tension of the strap by turning the nut on the eye bolt with a wrench.
11. Insert the mast from the top mast mount to the lower mast mount, and make sure that the bottom of the mast rests on the lances provided for that purpose. Tighten the nuts on the mast mounts, to hold the mast securely in place. The second buckle, which comes attached to the strap is shown in Fig. 8-9 (e) while the installed complete assembly is shown in Fig. 8-9 (a).

Present practice is to use the chimney strap wherever possible.

Fig. 8-8

Wall Mounts. – Although pipe straps and spacer blocks could be used to mount an antenna mast on a building wall – in fact on any vertical surface on which there is no more than 1" or 2" overhang that the mast must clear – this limiting clearance is usually not enough to clear the roof eaves, which, in most cases, jut out a foot or more. Wall mounts, therefore, must provide for such added clearance.

One of the oldest and still favorite types of wall mount used is the stand-off wall *bracket.* The complete unit is made up of two brackets and two straps, with the mast held in place by two U-bolts and fish-plates.

Installed, as shown in Fig. 8-10, it provides a clearance of 12" from the building wall. This is normally enough to clear the roof eaves. Where greater clearance is needed, a perforated ex-

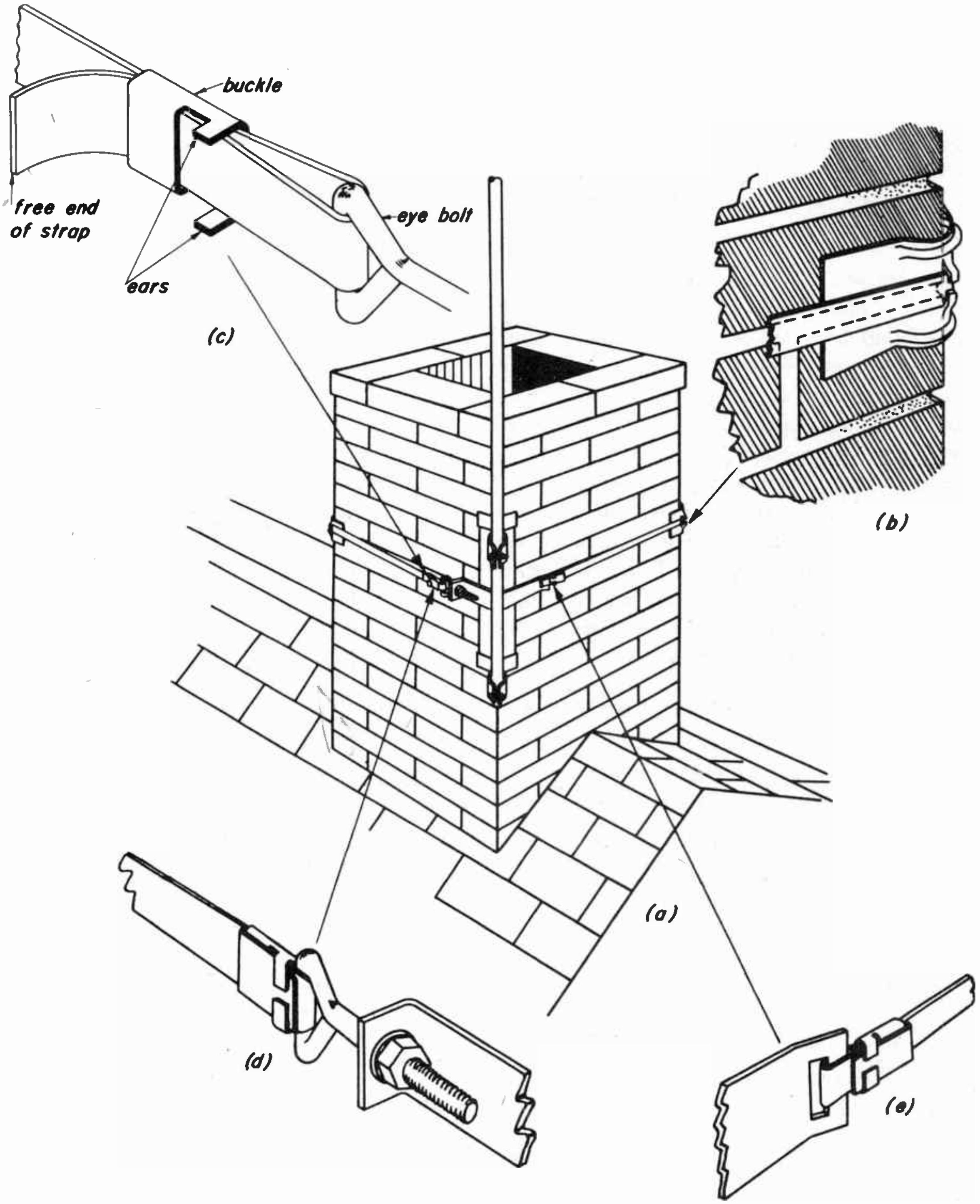

Fig. 8-9

tension arm is added to provide clearance up to two feet.

Fastening the bracket to the wall can be done as was explained for the pipe strap. On a wooden frame building, lag screws penetrating into the vertical studding will hold well. On a brick or concrete building, lead anchor bolts as in Fig. 8-6, or lead expansion shields with lag screws as in Fig. 7-7 (d) of the previous lesson, must be used.

In making a wall installation, it is usually necessary to work from a ladder. This can be dangerous and requires extreme care.

Peak Roof Mounts. – In suburban areas, where peaked roofs are common, peak roof mounts are frequently used. A standard *peak roof bracket* used in many installations is shown in Fig. 8-11.

Besides having adjustable feet to fit the slope of the roof on both sides of the peak, this bracket is provided with a mast raising feature. This is a real help in raising a tall mast under the precarious conditions encountered when working on the ridge of a peaked roof.

In order to provide added strength, and reduce the danger of roof damage, the preferred method of installation is *not* to mount the bracket directly on the roof, but on two 3 ft. lengths of 2" x 4" lumber fastened to the roof. With such supports fastened to the roof rafters or supporting structure, with sufficiently long lag screws or bolts, the mount can be fastened to the 2" x 4" timbers with 5/16" x 2" lag screws. The only holes that puncture the roof seal are those which hold the 2 x 4's. These holes, of course, must be carefully sealed with roofing compound to prevent leaks. When properly set up, the entire structure is sturdy, and there is very little likelihood of the roof leaking. Also, the undersides of the 2 x 4's, and the section of the roof in contact with them, should be generously coated with roofing compound, to prevent seepage.

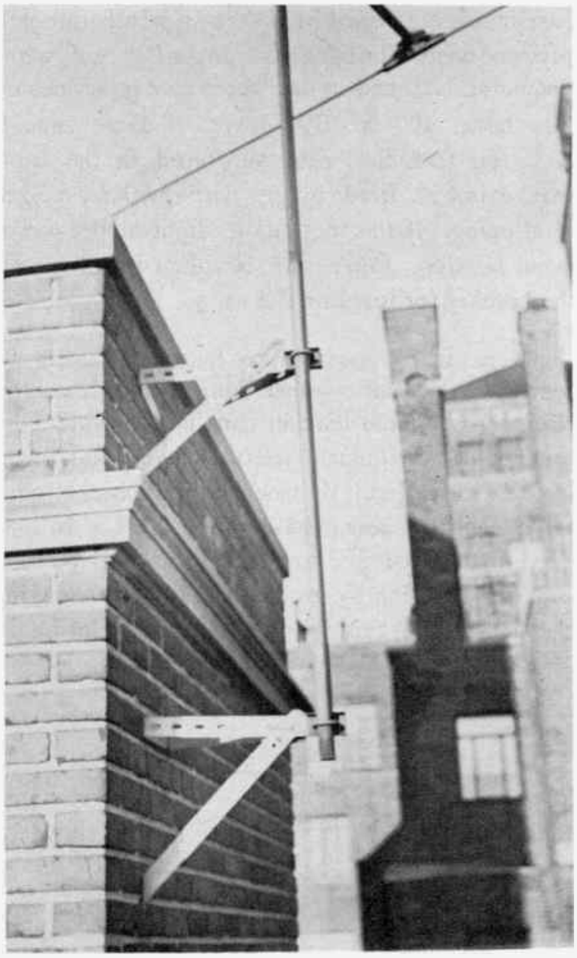

Fig. 8-10

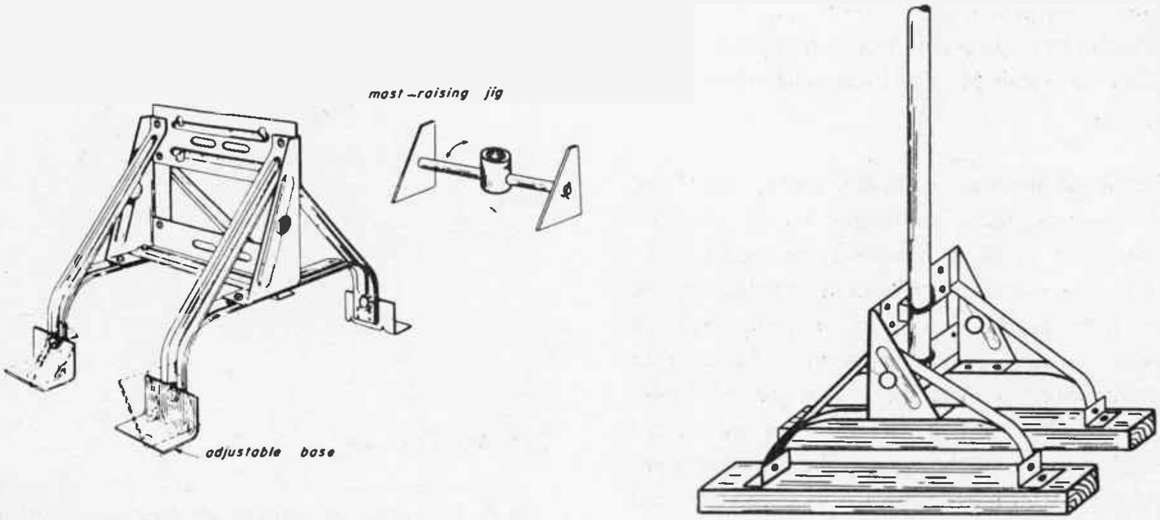

Fig. 8-11

Raising the Mast. – With the mast-raising swivel in place, the bottom of the mast is inserted into the socket, with the mast and assembled antenna lying horizontally along the ridge of the roof. The mast can then be easily raised by one man, who picks up the top end of the mast, raises it above his head, and then walks along the ridge of the roof toward the mount, raising the mast.

Incidentally, be sure you have the transmission line connected to the antenna, and the stand-offs to the mast, *before* you raise the mast. After all, you won't want to shinny up the mast like a monkey to attend to these jobs, which can be done more easily and safely with the mast horizontal. The same applies to attaching guy wires on tall masts that require them. When and how to install guy wires is discussed in Sec. 8-4.

When the mast has been raised, it is held in place by a fishplate and U-bolt, installed loosely in the upper part of the bracket as explained in Lesson 7. The mast raising swivel is removed and is retained for use on the next mast raising job. The mast is dropped to rest on the bottom support ledge of the bracket, and the lower fishplate and U-bolt can then be put in place. Lock washers and nuts are used to fasten the U-bolts, which are tightened sufficiently to hold the mast, while leaving enough slack to permit the antenna to be turned.

Orientation procedure – the turning of the antenna to find the direction from which best overall reception is obtained – will be studied in detail in Lesson 9.

Flat Roof Mounts. – On flat roofs, where the mast cannot be readily mounted on the chimney or parapet, it is often necessary to mount it directly on the roof. As previously explained, the hazard here is the danger of breaking the roof seal and causing a leak. However, if anchoring points for three or more guy wires are available, it is possible to use a flat roof mount not fastened directly to the roof. The guy wires are fastened high up on the mast. With the top held by the guy wires, friction of the base against the roof keeps the bottom from slipping.

This is illustrated with the *antenna base assembly* shown in Fig. 8-12. This consists of a pipe base bracket fastened by bolts to a weatherproofed plywood base. The base rests on the flat roof, without being fastened by lag screws or other means. The base, 10" x 10", covers a large enough area, so that the mast supported in the base bracket is held firmly by guy wires, without danger of slipping. If the roof has a slight slope, one or more *leveling shims* can be placed underneath the bracket for leveling the mast.

Where it is possible to fasten a mount directly to the roof without danger of a leak, the Nielssen peak roof bracket can then be used. This bracket is particularly useful where a tall mast is to be installed. By mounting the bracket on a large enough wooden base, about 16" x 16", it need not be fastened to the roof, but will be held firmly in position by friction and the wires guying the mast. A typical flat roof installation is shown here:

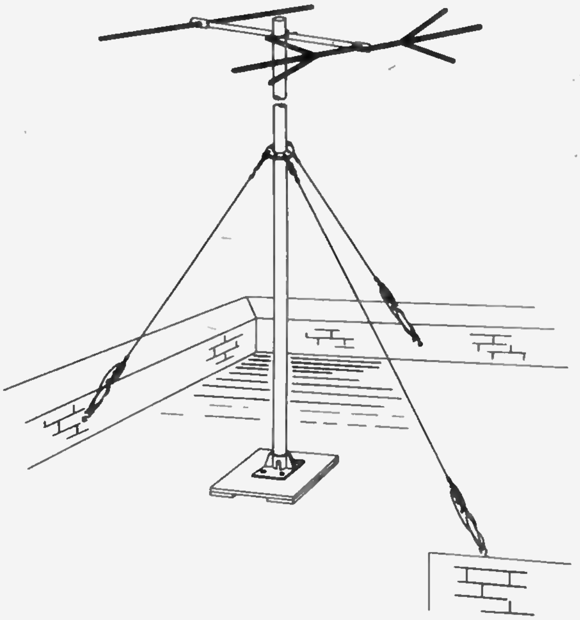

Fig. 8-12

GUYING THE MAST

8-4. It is present practice to use mast sections in 5 ft., 8 ft. and 12 ft. lengths. The height of the mast to be set up will depend on the particular conditions encountered at the location. In strong signal areas, the mast height is not an essential consideration in getting a strong signal to the receiver. In weaker signal areas antenna height is a determining factor.

In strong signal areas, where antenna height is not important, there is no point in using a 12 ft. section of mast if 8 ft. will serve the purpose. Of course, there are Building Code regulations that must be met. For example, there is the requirement in many localities that the antenna elements must be at least 7 ft. above the roof, to eliminate the hazard of someone walking into them.

Masts taller than 12 ft. are assembled by fitting two or more standard mast sections together, telescoped into each other and bolted, as explained in Lesson 7.

Guying the Mast. – Masts taller than 12 ft. should be secured with three or more *guy wires* to prevent failure under extreme weather conditions. It is important not only that *enough* guy wires be used, but that they be *properly spaced* around the mast, and securely anchored at the *right distances* from the mast. Otherwise, forces can be developed in the mast, in the guy wires, and on the anchor points, that can easily cause something to break.

We'll give you some rules of thumb for avoiding such failures. But it will be helpful if you understand why they are good rules to follow. Every antenna installation requires careful planning, and you are much more likely to plan it correctly if you know something about the mechanical principles involved.

Wind Loading. – First let's see what the wind does to an antenna mast. Even a light wind exerts a *force* (called the wind load) on the antenna at the top on the mast, tending to push it over. In a very high wind, this force can reach 50 pounds on a conical array – more if the diameter of the antenna has been increased by a coating of ice. This force is represented in Fig. 8-13, by the heavy straight arrow.

The mast itself acts as a lever. The bending force at the base of mast, called a *bending moment,* is equal to the *wind force multiplied by the length of the mast.* Thus, in our example, if the wind exerts a force of 40 pounds on the top of a 12 ft. mast, the bending moment is 40 x 12 = 480 *pound-feet.* This is indicated in the figure by the arrow curving to the left about the base of the mast.

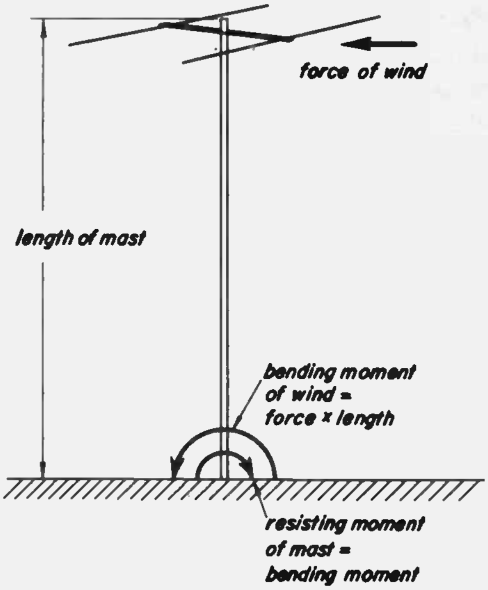

Fig. 8-13

The mast and its mount *oppose* the bending moment with an equal and opposite *resisting moment,* represented in the figure by the arrow curving toward the right. If the assembly is strong enough, the mast stays put. If it is too weak to supply a resisting moment equal to the bending moment, the mast breaks, or bends so far that it will not come upright again.

The important thing to note is that the taller the mast, the greater the bending moment at its base caused by the same wind force. The easiest way to reduce this bending moment is to install a *guy wire* part way up the mast, thus:

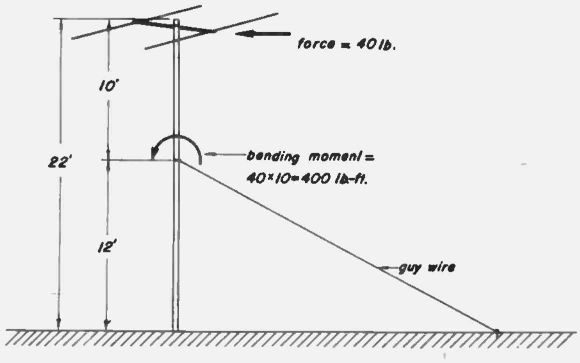

Fig. 8-14

Effect of Guy Wires. – Without the guy wire, a wind load of 40 lb. on a 22 ft. mast would cause a bending moment of 880 pound-feet at the base. With the guy wire, the bending moment is only 400 lb.-ft., at the point where the guy wire is attached. The higher up the mast the guy wire is attached, the less is the bending moment.

This raises the question: can the guy wire be attached *too* high? The answer is *yes*. The mast could then be bent too far out of shape *below* the guy wires, as we'll show.

The wind applies force not only to the antenna, but to the mast as well. Depending on where the guy wire is attached, the mast tends to be bent in one of these two ways:

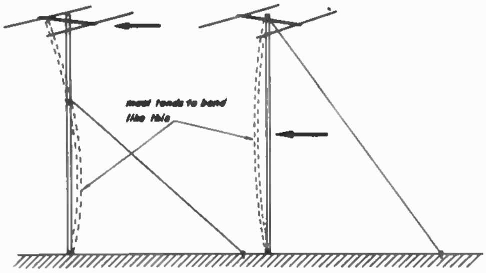

Fig. 8-15

In either case the mast could be permanently deformed if it were bent too far. Therefore, in the case of tall masts, *two* guying points are used, thus:

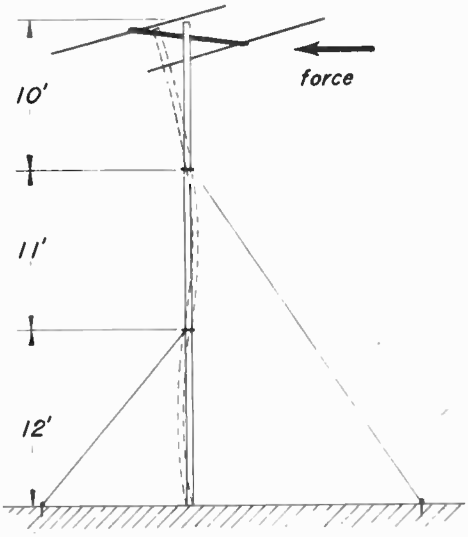

Fig. 8-16

With this arrangement, the mast tends to bend in three sections instead of one or two. But all the bending moments are much less than with one guying point or none. Therefore, the material of the mast is able to supply an adequate resisting moment, and the actual bending is much less than before, as shown by the broken line.

In practice, of course, the wind can't be depended on to blow always from the same direction. So it is necessary to attach guy wires that will resist a wind load from *any* direction. Looking down on a mast with one set of three guy wires, you would see something like this:

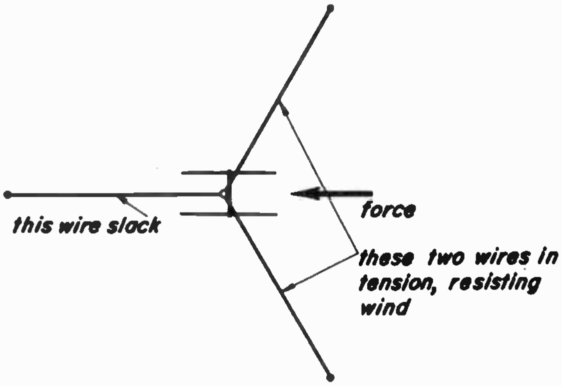

Fig. 8-17

This shows that in reducing the bending moment acting on the mast, we haven't actually "gotten something for nothing". In effect, some of the force of the wind is being resisted by the guy wires instead of by the resisting moment of the mast. The wires and their anchors must of course be strong enough that they will not break

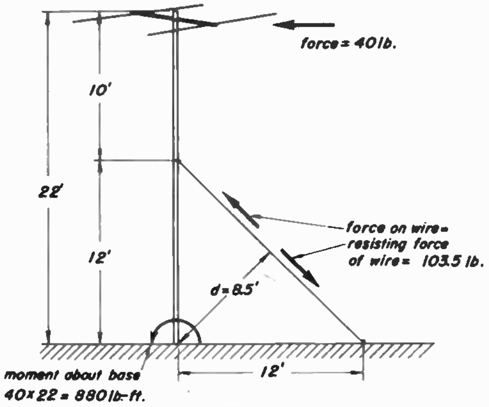

Fig. 8-18

under the force transferred to them. This brings us to consider how far from the mast base the guy wires should be attached.

Consider what happens in a 22 ft. mast guyed as shown in Fig. 8-18.

Tension in Guy Wires. – Without the guy wire, the bending moment at the base is 880 lb-ft. as shown. Even with the guy wire in place, the bending moment is still there, but most of it is being opposed by the guy wire. The guy wire, in other words, is supplying the *resisting moment* about the base. This resisting moment is equal to the resisting force of the wire, multiplied by the distance *d* from the wire to the base. The distance *d* is 8.5 ft. Since this, multiplied by the tension in the wire, must equal 880 lb.-ft., the tension in the wire must be 103.5 lb. (Actually, *some* of the resisting moment is still supplied by the inherent strength of the mast and its mount, and the wire tension is correspondingly less. But for the sake of simplicity, we are assuming that all of the resistance is offered by the guy wire. This is actually the case with a flat roof mount, which is not fastened to the roof.)

Now let's see what happens if we move the anchor point closer to the mast. If we place it 7 ft. from the mast, and compute the tension in the wire in the same way, we find it has gone up to 145 lb. And if we were so foolish as to place the anchor point only 2 ft. from the mast, the wire tension would be 446 lb., thus:

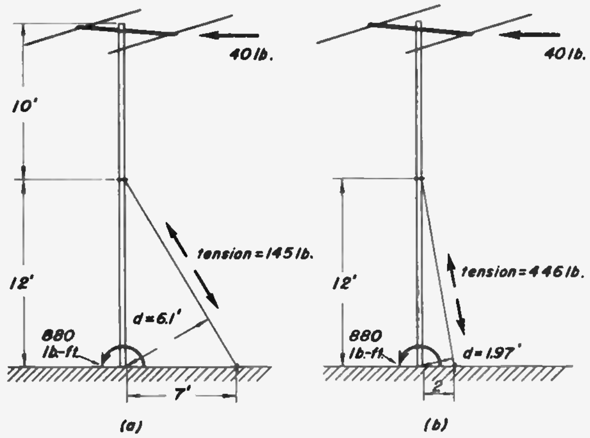

Fig. 8-19

The tension in the last example – 446 lb. – is dangerously close to the breaking point of the guy wire, which is about 500 lb. And remember that the wind load could be greater than the 40 lb. we have used in the example. Also remember that any tension in the wire is passed on to the screw hook to which it is anchored. The anchor might or might not be able to withstand this much pull. This all shows that *the guy wire should be anchored as far as possible from the mast base.*

Spacing of Guy Wires. – Now let's consider the matter of how the wires should be spaced around the mast. Suppose we have three wires spaced equally about a 22-ft. mast, like this:

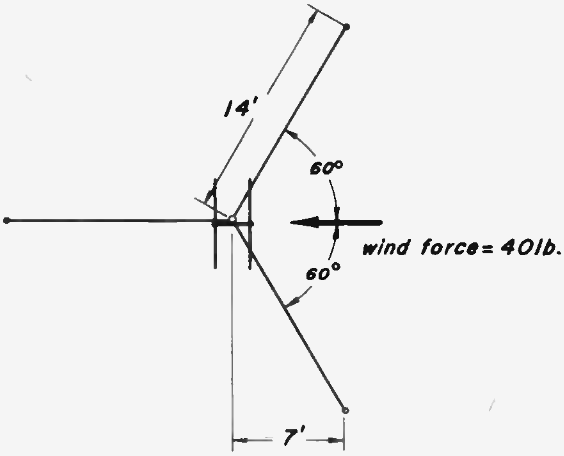

Fig. 8-20

Each wire is anchored 14 ft. from the mast. But for a wind from the direction shown, the *effective* distance is the distance measured in the direction of the wind, from the mast to the midpoint of a line joining the two anchor points. If the anchor points are equally spaced, this effective distance is 7 ft., as shown. Looked at from the side, this arrangement would be exactly as shown in Fig. 8-19 (a) (one guy wire being directly behind the other). The total *resisting force* required of the guy wires would be 145 lb., as before. But since there are two wires resisting the bending moment, each would carry half the load. The tension in each wire would therefore be only 72.5 lb.

Now suppose the wires were not equally spaced, as illustrated in Fig. 8-21. Now the effective distance of the anchor points is only *one* foot – in spite of the fact that their actual dis-

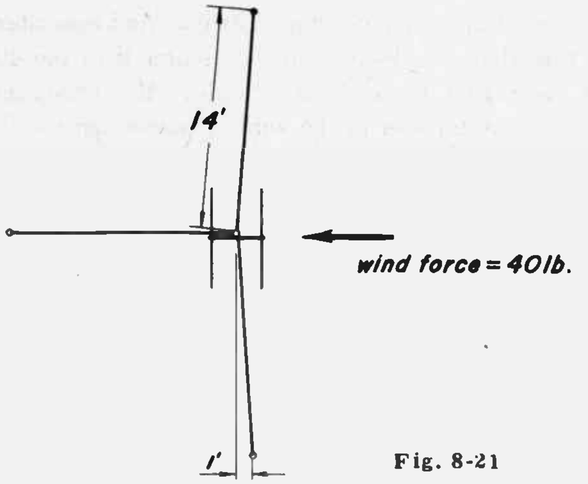

Fig. 8-21

tance is 14 ft. With this arrangement, the total force to be supplied by the guy wires is 880 lb., and the tension in *each* wire is 440 lb. And of course, if the wind shifted a little, the load would no longer be equally divided between the wires, and the tension on one of them might easily go above the breaking point.

The obvious conclusion of all this is, of course, that guy wires should be spaced as nearly evenly about the mast as possible, and should be anchored as far as possible from the mast. No one expects you to calculate the bending moments and tensions in any installation you make. We'll give you some easily remembered rules that you can apply in most cases. But you will undoubtedly encounter locations where it is difficult to follow the rules, as when there are few suitable anchor points for guy wires. If you have developed a sense of the underlying principles involved, you should be able in such cases to devise an installation that will hold up.

Forces on Mast Mounts. – These same principles apply to other parts of the installation besides guy wires. For instance, bending moments on guy wire anchor hooks should be avoided, as shown in Fig. 8-22.

Or in installing a stand-off wall bracket, the principle of moments shows us why it is best to get the two brackets as far apart as possible. This is shown in Fig. 8-23.

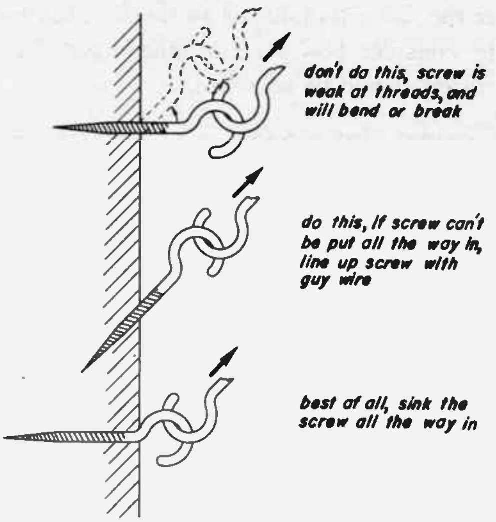

Fig. 8-22

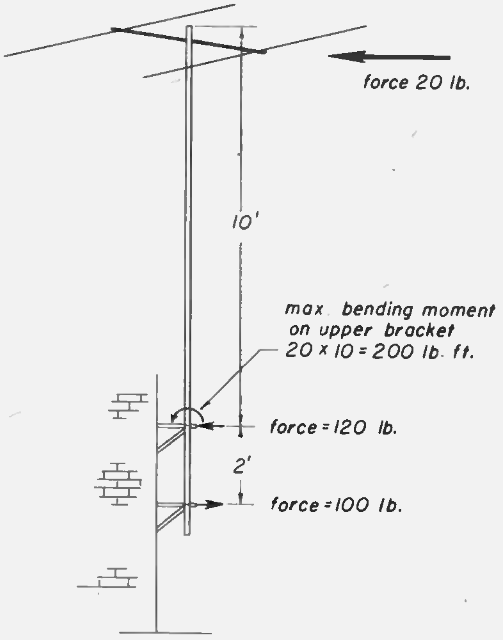

Fig. 8-23

The bending moment due to the wind load acts about the upper bracket as shown. For the wind direction shown, it acts to push the upper bracket in toward the wall with a force of 120 lbs., and to pull the lower one out, with a force of 100 lbs. For the opposite wind direction, the reverse is true. Notice that the further apart the two brackets are mounted, the less is the force tending to pull one bracket away from the wall.

But there are other moments acting on the brackets, due to the *weight* of the mast and antenna.

Since the forces of weight and wind add, the total force tending to pull out the top screws of the lower bracket is (for the figures shown in the example), 100 + 18 = 118 lbs. – nearly 6 times the wind load, or 10 times the weight.

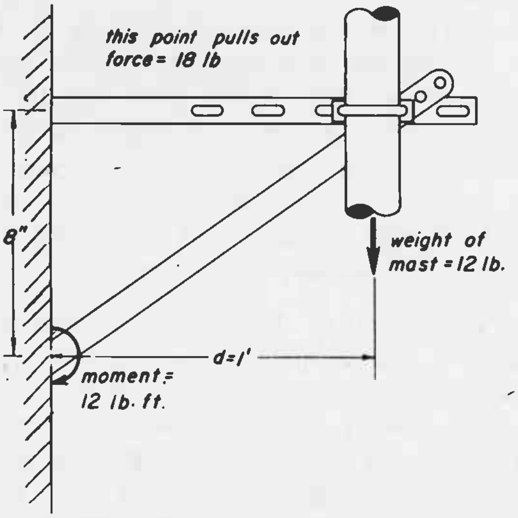

Fig. 8-24

If we were now to consider the effect of a wind coming from a direction at right angles to that shown in the figure – that is, blowing parallel to the wall – still another set of moments would come into being, tending to wrench the brackets from the wall by bending them sideways. We won't bother to analyze this situation. The main point is that relatively light loads can, by reason of the way a mount is installed, exert very large forces that *tend* to undo your best efforts. See to it that they don't succeed.

Now let's get back to guy wires, and consider the practical rules for their proper installation.

When Guy Wires are Needed. – Masts 12 ft. high or less do not require guy wires, unless they are installed on a flat roof with a mount that cannot be fastened to the roof. A single set of guy wires is requires for masts taller than 12 ft. and less than 24 ft., regardless of the type of mount. Masts from 24 ft. to 34 ft. require two sets of guy wires. Masts taller than 34 ft. require three sets of guys. When it is desired to install masts higher than 44 ft., special towers are needed. At present, it is standard practice to have tall towers erected by sub-contractors.

Number and Spacing of Guy Wires. – Each set of guy wires must contain at least three wires. Occasionally four wires are used. The wire should be spaced as evenly as possible around the mast. The number of wires to be used is determined by the position of suitable anchoring points on the building structure. Usually, three wires are sufficient for each set of guys. (The number of sets, of course, depends on the height of the mast.) For two sets of guys, six wires are sufficient. Preferably, the wires of the second set are anchored approximately midway between the anchoring points of the first set. This distributes the stress among more anchoring positions. Where sufficient suitable anchoring points are not available, it may be satisfactory to anchor both sets of guys on the same screw hook. But this arrangement is not as firm as when the two sets of guys are anchored at different points.

Details of a typical installation are shown in Fig. 8-25. The 33-ft. mast shown is made up of three 12 ft. sections telescoped into each other. The lower section is 1-7/8" outside diameter tubing into which a 1-5/8" section is telescoped to a depth of 1 ft. The upper section of 1-3/8" tubing telescopes into the second section to a depth of 2 ft. In the installation process, holes are drilled into the telescoping sections and bolts inserted, two in each joint at right angles to each other as shown in Fig. 7-6, to form a firm joint. The constructional dimensions are shown in the figure. A complete explanation of the method was given in Lesson 7.

Since the installation shown in Fig. 8-25 uses a 33 ft. mast, it is supported by two sets of guy wires. These wires are held in place at the mast by *guy rings* slipped over the upper sections of mast to rest on the lower sections of the telescoped joints. Two different size guy rings must be used. One has an inside diameter a little greater than the outside diameter of the center section of mast, 1-5/8", so that it can be slid over this section to rest on the lower section of mast. The second guy ring is somewhat smaller, so that it can be slid over the 1-3/8" diameter upper section of mast, to rest on the 1-5/8" mast section. The lower guy ring must be put in position *before* the upper section of the mast is fastened, since it cannot be slipped over the bolts. The guy rings can turn freely, permitting the guy wire to be positioned properly in the process of erection, and also allowing the mast

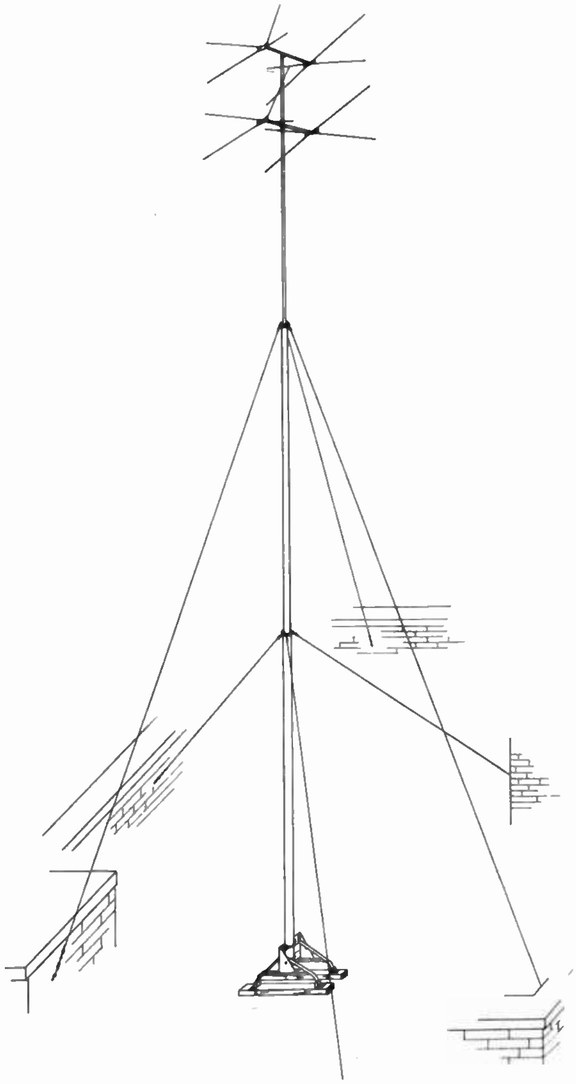

Fig. 8-25

to be turned later for the proper orientation of the antenna.

Each guy ring has six holes, so spaced that either three wires or four wires may be equally spaced and fastened around the ring.

Location of Anchoring Points. – In order to hold the mast most securely, and reduce the danger of the guy wire anchors being pulled out of their fastenings, *the anchoring points must not be too close to the base of the mast.* A safe rule to follow is to place the anchors at a distance from the base of the mast such that *the length of guy wire, when in place, will not be more than twice this horizontal distance.* That means that the guy wire would form an angle of at least 30 degrees with the mast. If the anchoring points were in closer to the base of the mast, the angle of the guy wire with the mast would be sharper, and any movement of the mast, due to wind, would exert a greater force or pull on the guy wires and on the points where they are anchored. In such a case, too much stress could be placed on the anchors, causing them to be pulled out of their fastenings, and the mast to fall.

The selection of suitable anchoring points can be a difficult problem, since the anchors *must* be fastened securely in the building structure, and must be far enough from the base of the mast. The preferred locations are the building parapet, or a projecting rafter, or the end rafter at the sloping end of the roof. If at all possible, *do not anchor directly onto the roof.* Where no other suitable anchoring point is available, and it becomes necessary to fasten one or more anchors through the roof covering, the hole in the roofing must be carefully sealed by generous applications of roofing compound.

On a wooden frame building, it may be convenient to fasten the anchor on a rafter or stud at the edge of the roof or the eaves; but, in such a case, *stay clear of rain gutters and copper roofing or flashing.* Also keep in mind that the guy wires must not be placed in such a position that they become a hazard to anyone having legitimate business on the roof. They must not obstruct passageways, doors or fire exits.

Installing Guy Hooks. – When suitable anchoring points on the building structure have been decided on, guy hooks are placed in position, by screwing either into a wooden structure or into a lead expansion shield installed in brick or concrete. Knowing the position of the anchor hooks and the position of the mast, it is possible to estimate the lengths of guy wire needed.

Estimating Length of Guy Wire. – The right triangle relationship shown in Fig. 8-26 (a), illustrates the calculation required. The square of the length of the slanting side is equal to the sum of the squares of the lengths of the other two sides.

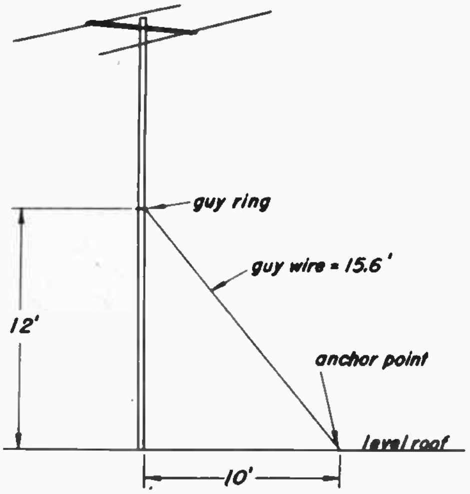

Fig. 8-26 (a)

For example, if the guy wires are fastened 12 ft. above the base of the mast, and the distance from mast to the anchor point is 10 ft., then the length of the guy wire when in place must be $\sqrt{12^2 + 10^2} = \sqrt{144 + 100} = \sqrt{244} = 15.62$ ft. If figuring square root is difficult, a safe short cut is to figure the average of the vertical and horizontal distances, and multiply it by 1.4. In the example, the average of 10 and 12 is 11, and 11 x 1.4 gives 15.4 ft. as the length of the wire. However, if the anchor point is *very* far from the mast, the wire length will be a little more than the horizontal distance. Also, if the mast is mounted on a sloping roof, you must estimate the vertical rise of the roof, and add this to the height of the mast up to the guy ring to get the total vertical distance for your calculation, thus:

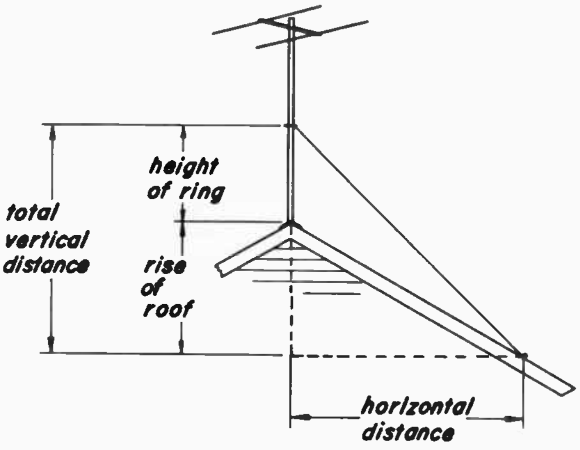

Fig. 8-26 (b)

When the wire is cut from the coil, it is necessary to cut about 3 or 4 ft. more than the calculated length, in order to allow for fastening the wire and securing the turnbuckle, and also to make sure that the length is not cut too short. In the above case, you should cut a length of approximately 20 ft. of guy wire.

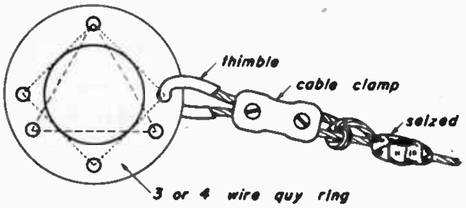

Fig. 8-27

Fastening to Mast. – Figure 8-27 shows how the guy wires are secured to the guy ring. This is done with the guy rings in position on the mast, before the mast is raised. The wires are threaded through the proper holes in the guy ring, and over thimbles which prevent fraying or breaking of the wires. Cable clamps hold the wires together just below the thimbles, to form a tight bond with no slippage. As an added precaution, the wire is looped to form one or more half-hitch knots, and then the end of the wire is taped to form a neat, finished job.

When all the guy wires have been properly fastened to the guy rings, the anchor hooks installed, the transmission line stand-offs attached to the mast, and the line connected to the antenna terminals and threaded through the stand-offs, the completely assembled mast and antenna are ready to be raised. The fastening of the guy wires to the anchor points, and the adjustment of the turnbuckles, is of course done after the mast is raised, and will be discussed in the next section. The connection of the transmission line and stand-offs will be explained in Sec. 8-6.

ERECTING AND SECURING THE MAST

8-5. The assembly of the mast and antenna – including the attachment of the transmission line, the stand-offs and the guy wires – is usually done on the roof. Where that is not practical, it is done on the ground in a position where the whole assembly can be readily hoisted to the roof. The raising of the antenna assembly on the roof can be greatly aided by the use of a bracket incorporating the mast raising swivel. Where such a bracket is not used, the raising of a tall mast is more difficult.

Raising the Mast. – We have already discussed how to raise a tall mast with its swivel. Whether the swivel is used or not, the base must be held firmly while the mast is being raised. If the swivel is not used, it is frequently desirable to lash the base of the mast to the chimney or to the mount. Another thing to note is that, to prevent the mast from moving beyond the vertical, and falling over, or to one side, it is good practice to fasten the ends of the guy wires temporarily as safety wires, in the direction from which the mast is being raised.

With the mast raised to a vertical position, the upper support of the mount (either pipe strap, U-bolt and fish plate, or other means) is temporarily fastened to hold the mast while the raising swivel (if used) is removed. The base of the mast is then dropped to its correct position on the mount, and the lower support on the mount is fastened. The mast is now held firmly enough by the mount so that the installation man can safely leave it and go ahead with the fastening of the guy wires.

Anchoring the Guy Wires. – The method of securing the guy wire to the supporting structure is shown here:

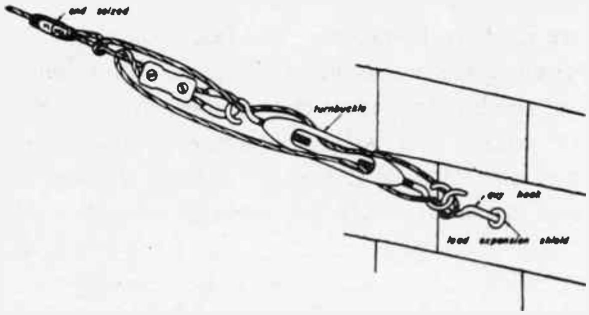

Fig. 8-28

The guy hook has already been installed as previously explained. The guy wire is not fastened directly to this hook, but is tied onto a *turnbuckle*, which fastens to the hook as indicated. The turnbuckle screw eyes should first be turned to the maximum extended position to allow for later tightening. Then the guy wire is fastened to one eye of the turnbuckle by the use of a *thimble* and *cable clamp*, in the same manner as already explained for the fastening at the guy ring, except that a couple of feet of wire is left for threading through the turnbuckle.

Adjusting the Turnbuckles. – When all the guy wires have been fastened to their anchor supports through the turnbuckles, the position of the mast is checked from all sides to be sure that it is vertical. Then the turnbuckles are tightened to take up any slack. It is important to remember *not to put too much tension on the wires.* If the wire is too tight, unnecessary stress is placed on the anchor, which may cause it to be loosened from its support.

When all turnbuckles have been adjusted to tighten the guy wires properly, they are fixed in position by threading the end of the wire through the body of the turnbuckle, as shown in Fig. 8-28. A half-hitch knot is first made at the cable clamp. The wire is then threaded through the body of the turnbuckle, then through the lower screw eye. Then it is wrapped around the guy hook with one or two turns to hold it securely, then back through the turnbuckle body in the opposite direction, and through the upper screw eye. Two half hitches are made to hold the wire tight, and the end is taped to make a finished looking job. When properly done, this makes a tight, safe connection that prevents the turnbuckle from loosening.

It is still possible to turn the mast for orientation purposes. The final tightening of the mast is done at the mount when orientation adjustments are completed. This is done by tightening up the pipe straps or the U-bolts on the mount.

INSTALLING THE TRANSMISSION LINE

8-6. As previously mentioned, the transmission line must be connected to the antenna terminals *before* the mast is raised. It is not practical to make soldered connections outdoors or up on the roof, but a good electrical and mechanical connection is necessary. This is done by the use of an approved type of *antenna lug.*

Connecting to the Antenna. – The connection, though simple, deserves some explanation. The method of connecting the lug to the transmission line is like this:

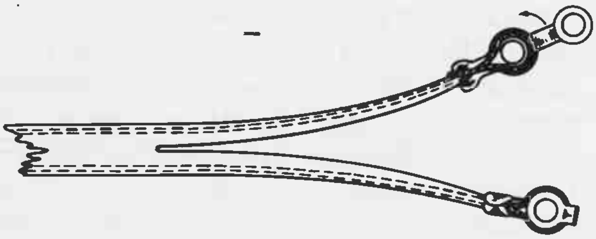

Fig. 8-29

A cut is made in the insulation between the conductors at the end of the transmission line, to separate the conductors. The cut should not be made longer than about 5 inches. About 2 inches of the end of each wire is then stripped as shown in the figure, and the wire is carefully cleaned to prepare it for connection to the lug. The bare wire is then wrapped around the lug to make a good mechanical and electrical connection, and the end of the lug is crimped to hold both the loose end of the wire and the insulation. As shown, the lug has two rings joined together. The loose ring is bent over the part that crimps the insulation and holds the end of the wire, so that the wire (wrapped around the hole in the lug) will make good electrical connection to metal on both sides of the lug.

With the two lugs installed, one for each wire of the transmission line, the lugs can then be slipped over the terminals on the antenna. A good mechanical and electrical connection is formed when the lockwashers and nuts are tightened in place.

A proposed method is to use Stakon lugs which are attached to the transmission line with a special crimping tool.

Since the line must carry a high frequency signal from the antenna to the input terminals of the receiver with as little attenuation or signal loss as possible, it is necessary to route and support the transmission line in such a manner as to minimize loss and keep the signal clean. To reduce signal loss, the line must be kept away from any conducting surface. To be on the safe side, it is held away from the mast and the building wall by insulated *stand-offs*, suitably spaced along its length.

Installing Stand-offs. – Since the stand-offs support only the transmission line, which is quite light, no great mechanical strength is necessary. Therefore, types of stand-offs have been developed which are easily and quickly installed.

For the mast, there are wire stand-offs which can be slipped around the mast and tightened in place merely by crimping a wire link. Installed, they look like this:

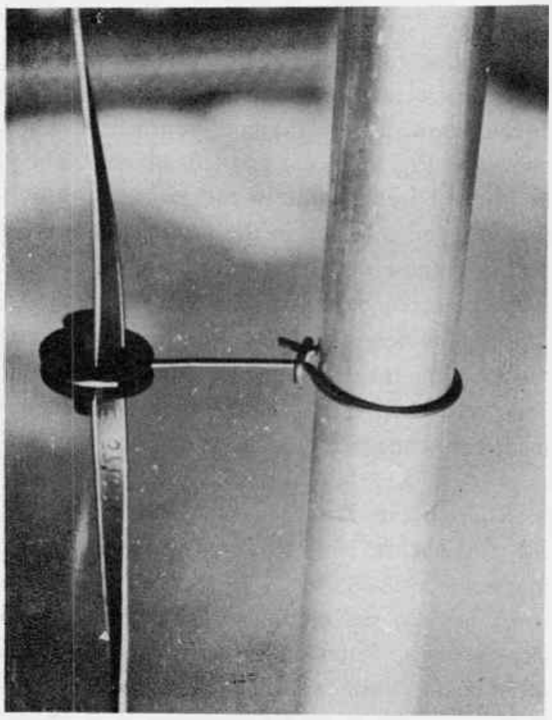

Fig. 8-30 (a)

The best procedure is to put the wire link in place before slipping the stand-offs over the mast. The stand-off is positioned and tightened in place when the transmission line is installed.

For the building wall, either wood, brick or concrete, the approved method is to use screw-in type stand-offs, with or without Rawl plugs.

Since there is very little stress placed on them, these hold the line firmly in place. "Nail-it" type stand-offs are available for special situations, but the approved general purpose type is the screw-in type described above.

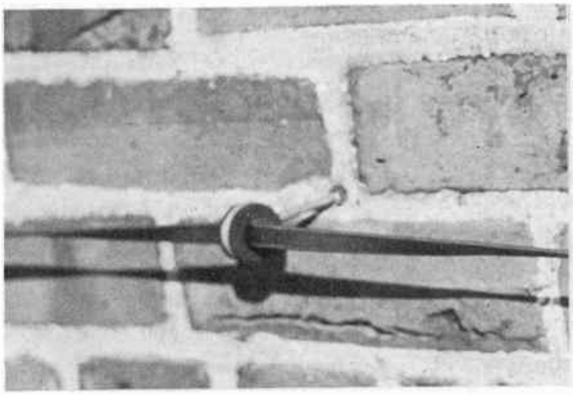

Fig. 8-30 (b)

The line is insulated from the metal stand-off by means of a rubber grommet or, a more recent development, a polyethylene grommet. These are shown in Fig. 8-30 (a) and (b), above. The line is slipped into a slot in the grommet, which is then slipped in place in the small ring at the end of the stand-off, and the ring is crimped to hold the grommet and line firmly. In the case of the rubber grommet, a tight fit is formed by forcing a rubber plug into the grommet after the line has been inserted. The plug fits and holds better if it is moistened before insertion.

Routing the Transmission Line. – In routing the line, it is best to keep the line as inconspicuous as possible. Run it straight down a wall, not sloping or draped. Keep it away from fire-escapes, safety ladders, rain gutters and other metal surfaces. Avoid horizontal runs of the transmission line, if possible. If it is necessary to run the line horizontally, keep such horizontal runs *short*. Long lengths of line, running, horizontally, frequently pick up unwanted signal or noise which interferes with the television picture.

In suburban homes, it is desirable to run the line down to the basement and then up through the floor to the receiver location. This is not practical in a large apartment house, of course. In such cases the line is run down to the proper floor and brought in through the window casing.

It is important to protect the line from abrasion at any point where such danger exists. This is done by slipping a length of loom or vinylite tubing over the line to cover the section where abrasion may be encountered. This is done where the line passes over the eaves of the roof, over the parapet, around the corner of the building, and where it enters the building.

While it is necessary to avoid slack in the line, the line should not be pulled too tight, since some allowance should be made for possible contraction and expansion during variations of temperature. The proper procedure is to twist the line so that there are about three twists between stand-offs spaced about two floors apart (on an apartment house). This has the added advantage of keeping both conductors equally balanced to ground.

The line is brought into the building by drilling a 7/16" hole through the window casing (if a suitable opening is not already available), with the hole drilled downward toward the outside so that no water can seep in when it rains. The line is run through the hole, and both ends of the hole are plugged with plastic wood to waterproof the opening, and make a neat professional appearing job. Where possible, this entry is made through a cellar window, and the line is then carried across the cellar ceiling and up through the floor to the receiver.

To protect the installation from possible damage from accumulated static charges, a suitable lightning arrestor must be connected to the transmission line. Connection should be made indoors at the nearest suitable place to the point of entry. This will be studied in the next section.

LIGHTNING ARRESTOR AND MAST GROUNDING

8-7. To protect antenna installations from direct lightning strokes and accumulation of static charges, paths must be provided to carry such electrical charges to the earth. This requires the use of lightning arrestors on transmission lines, and in many cases, the grounding of metal masts. On coaxial lines, in which the outer conductor is grounded, lightning arrestors are not needed.

Experience has shown that there have been very few cases in which damage has resulted from lightning when the installation has been properly made. In some cases, lightning struck the mast and was returned to earth through the aluminum grounding wire. In other cases, the lightning struck the antenna elements and followed two paths to earth. One path consisted of a flash across the cross arm to the mast and then to earth, while the other path was down the transmission line, through the lightning arrestor to earth. The damage to the antenna, line and arrestor in these cases was unbelievably slight.

When proper protection is provided, there is very little danger of damage to the receiver. Even a direct lightning stroke would damage only the antenna coil.

There has been some controversy in regard to the need for grounding the mast. In areas where lightning rods on the building or nearby taller buildings furnish protection against direct lightning stroke, it is not considered necessary to ground the mast. In areas where there is danger of direct hit by lightning, it is best to ground the mast. Through experience, the needs of specific areas are fairly well defined. The established practice is to ground the antenna mast wherever such grounding is required by local codes or ordinances, and wherever local practices make it advisable.

Nature of Lightning. – To understand the need for adequate lightning protection, let us review briefly the nature and characteristics of lightning.

All of us have seen electric sparks fly at one time or another. For instance, shorting the terminals of an automobile battery momentarily will produce a rather impressive spark. The spark occurs because there is an excess of electrons at the negative terminal of the battery and a deficiency of electrons at the positive terminal. The excess electrons would like to get to the positive side, if given a chance. When you momentarily short the battery you give them that chance, and the resulting spark is the effect of the excess electrons jumping over to the positive terminal of the battery.

The accumulation of the negative and positive charges on the terminals of the battery results from a chemical action, but there are other ways in which charges can be built up. For example, when you walk over a rug on a dry day, the friction of your shoes against the rug results in your picking up an electrical charge. It may not be much of a charge, but when you put your finger close to a metal door knob you can feel a slight shock and see a tiny spark. Here we have a very simple case of the accumulation of an electrostatic charge and its discharge.

Much the same thing happens in a lightning discharge, but on a really grand scale. During an electrical storm, a cloud may accumulate an excess of electrons. In time, the cloud may build up a negative potential of millions of volts with respect to the earth. This tremendous excess of electrons would like to jump to the earth, and will actually do so when the potential difference is sufficiently great. The leap of the electrons from cloud to earth is what we observe as a lightning discharge. Under some conditions, the earth might be negative with respect to the cloud and the leap would then be from earth to cloud.

Whichever direction the electrons travel, the effects are the same. When the lightning travels from cloud to earth it attempts to enter the earth at the place of best conduction, or least resistance to its travel. This may be the bare earth or a tree, or it may be a metal fence or a tall metal pole. If all of these are present in the same vicinity, the chances are that the lightning will strike the point of greatest elevation, particularly if it is a reasonably good conductor. Hence the use of lightning rods on buildings. The charge is drawn off through the lightning rod, and is conducted to earth by suitable wires or the metal frame of the building. What happens if a rod (or mast) is on top of a building without suitable ground connections? In this case, the lightning stroke must pass through part of the building on the way to earth. This may cause structural damage and fire. If the rod or mast were suitably connected to earth through a low resistance conductor, damage would be reduced – usually to a negligible amount.

Even if a direct stroke does not hit the mast, a large static charge may build up on it, if insulated from earth. For example, in an 8 foot mast which is not grounded, it is possible to build up a static charge of 30,000 volts or more from an electrical storm as much as 3 miles away. Touching such a charged mast could produce a severe shock.

To reduce the effects of static charges on the antenna elements and transmission line, a lightning arrestor is installed near the receiver end of the line. One of the approved types of arrestors is the *indoor* type, #206X1. If an arrestor must be located outdoors, it must be completely water-tight, since any moisture might provide a conducting path, and attenuate the signal to the receiver. Outdoor arrestors should be avoided, if at all possible. But if you *must* use one, the Brach type #4004 arrestor is suitable.

The Lightning Arrestor. – The lightning arrestor which is approved for *indoor* installation is type 206X1, shown below:

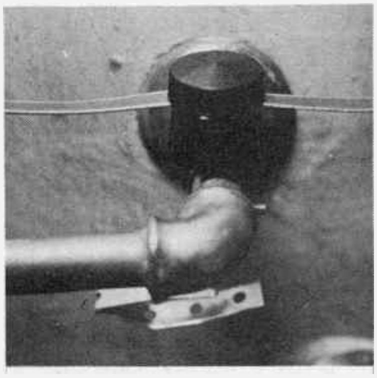

Fig. 8-31

The type 206X1 lightning arrestor is a moulded plastic device which comes with an attached ground strap fitted with a nut and bolt arrangement for easy and convenient mounting. It is designed for use with the parallel wire transmission line. A coaxial line usually does not require a lightning arrestor.

A button type resistance element in the base of the arrestor provides a means for draining static charges which might otherwise build up on the transmission line. This measures a minimum of 30,000 ohms across the conductors of the transmission line. A spark gap arrangement consisting of two conductors separated by an air gap provides a path across which an excessive charge can pass to ground. If lightning should strike the antenna or line, the charge will jump this gap. The arrestor would be damaged and have to be replaced, but it would protect the receiver from damage more serious than a burned out coil.

The lightning arrestor is installed in the following manner:

1. Locate an inside *cold* water pipe nearest the point where the transmission line comes into the building. In private dwellings this will usually be in the basement. If a cold water pipe is not available, ground to the earth by the use of a suitable long metal stake driven all the way in, or to the steel structure of the building, if exposed. As a last resort, use the hot water or steam pipes.
2. Whichever grounding is used, be sure to scrape or sandpaper a short section very thoroughly to remove any paint or corrosion, and provide a good *electrical* contact.
3. A long perforated strap is provided with the arrestor. The strap is designed to fit any pipe from ½ inch to 2 inches in diameter. Wrap the strap around the pipe tightly, so that the holes in the strap match, but do not touch. Insert the screw through the matching holes, put on the nut, and draw up tightly, to secure a good connection. Don't be too rough about it though, because you might break the strap.
4. Unscrew the top cap and remove it from the arrestor. This arrestor is specifically designed to match the 300 ohm transmission line, or any other flat line with a conductor spacing of 0.3 inch. It will not be suitable for any shielded type lines.
5. Place the transmission line *flat* in the open slot of the arrestor. The sharp points should be aligned with the conductors.
6. Replace the top cap and screw it on tightly (hand tight). This will force the sharp points into each conductor, and make positive contact to the line.

There have been some instances where arrestors have been mounted on the antenna cross arm or antenna mast. This is poor practice since it does not protect the transmission line and receiver, and it is not approved by the Underwriters. In general, outdoor installation of lightning arrestors should be avoided, since they are not 100% waterproof. Wherever possible, use the type 206X1, following the procedure outlined above.

INSTALLATION PRECAUTIONS

8-8. In putting any structure on an existing building, the structure installed must not be a hazard to persons or property, and care must be exercised that the building is not damaged during the installation. Fire Underwriter Regulations and Building Code requirements are very specific about these points, and anyone who violates them can get into plenty of legal hot water.

Specific items requiring particular care in an antenna installation are: (1) prevention of personal injury to others; (2) possible damage to roof, chimney or building frame; (3) possible damage to the building wall, the grounds, or other property of the customer; and (4) possible damage from electrical short circuits or lightning.

The Safety of Others. – Even more important than avoiding damage to property is preventing personal injury to others. During the installation, the utmost care must be taken to insure that nothing falls from the roof. At no time should any tools or materials be left in a position where they could fall or accidentally be pushed off the roof. Check carefully to see that the finished installation is secure, and that a *safety wire* is installed where required.

The safety wire consists of a suitable length of guy wire securely fastened to the mast at a distance of about one-fourth of the way down from the top of the mast.

Any installation in which the antenna is directly over or close to a *public thoroughfare* requires the addition of a safety wire to safeguard people below in case the antenna mounting fails. A public thoroughfare may be a street, sidewalk, alley, or other passageway through which the general public passes, or may have access to. The private driveway of a private house would not be considered as a public thoroughfare; therefore, an antenna mounted so that it might fall on such, private driveway, does not *require* a safety wire – but it is still a good idea to add it. Of course, where an antenna is mounted in such a way that in case of failure it would fall onto an adjacent flat roof, there is usually no need to add a safety wire. However, there are localities in which safety wires are required on all unguyed masts; for example in areas where hurricanes occur. In other localities, it is required to mount masts at least as far from the edge of the roof as the mast is tall.

The safety wire is fastened by wrapping it *tightly* several times around the mast and securing it with a cable clamp. It is important that the safety wire be wrapped tightly to prevent any slippage in the event that the mounting fails. The safety wire is secured to the roof by a guy hook, suitably fastened into wood, brick or concrete, as the case may be. Two typical installations which illustrate how and where safety wires are used are shown below.

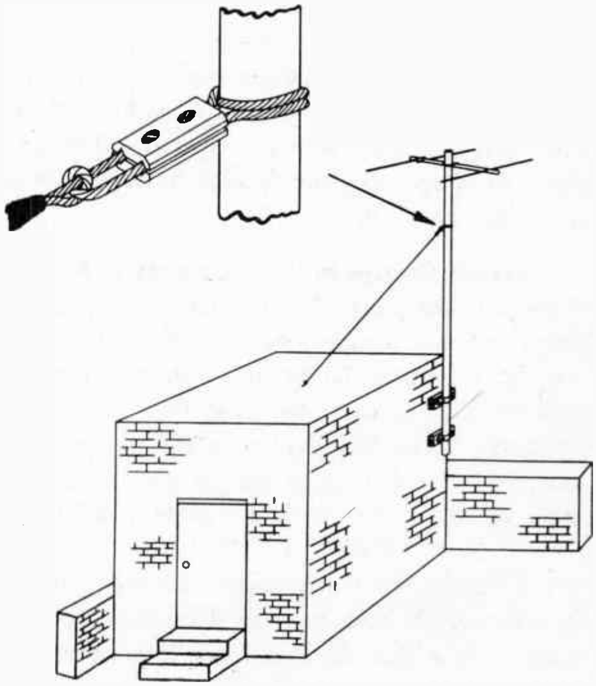

Fig. 8-32 (a)

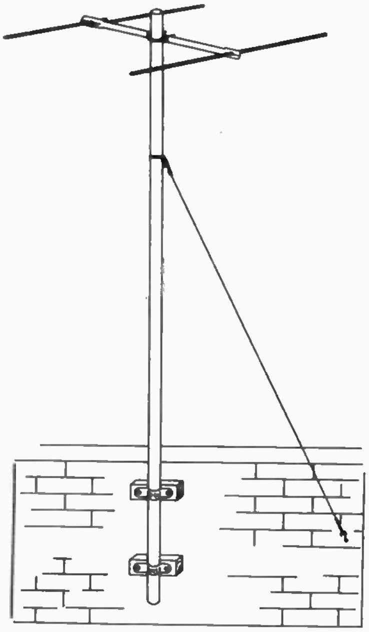

Fig. 8-32 (b)

Figure 8-32 (a) shows an antenna installation on the side of an elevator penthouse which is close to the edge of the roof. Note that the safety wire is tied back to the top of the penthouse. Of course, if the penthouse was far enough away from the edge of the roof, no safety wire would be required. In that case, the antenna would fall on the flat roof, where it would stay.

In Figure 8-32 (b) the antenna is shown mounted on the inside of a parapet wall. In this case, the antenna could fall over the edge of the roof; therefore; a safety wire is required. The best place to secure the wire is also to the inside of of the parapet wall.

Possible Damage to Roof, Chimney or Building Frame. – The possibility of roof damage, and the legal problems involved were studied in Lesson 5 as an important factor in customer relations. Always keep in mind the need for a careful inspection of the roof before an installation is attempted. If the roof is not in good condition, stay off it. If you have any doubts, make sure before you proceed. It may be necessary to get a written release from the customer. In any case, carefully note any roof defects on your job card. This can be useful for later reference.

Weak or defective chimneys are hazards to watch out for. A chimney may look strong, but the mortar may be so poor that any attempt to work on it may weaken the structure. The installation of a pipe strap and spacer block mount on such a chimney would be a real hazard, since the weakened bricks could be pulled out in a strong wind. The hazard is eliminated to a great extent by the use of the chimney strap type of mount; but even this type mounting should not be used on a chimney that shows any sign of structural weakness.

When installing a mount on a building with a wooden or veneer wall, see that as many of the lag screws as possible are firmly fastened fastened into the studding. If this is not done, the lag screws may pull out, causing damage to the antenna installation and to the building. As explained in Sec. 8-4, a wall bracket has a tendency to pull away from the building at the top and is pushed against the wall at the bottom. Therefore, the bracket should be mounted as shown in Fig. 8-10 (a). Each bracket is secured by three bolts, two at the top and one at the bottom. This is the proper procedure, since it is more difficult to anchor firmly the top bolts, which are subjected to a force tending to pull them out from the building. By dividing this force between two bolts, the resulting pull on each is reduced.

Trouble frequently develops when the guy hooks to anchor the guy wires are not properly seated. They can pull loose and cause damage to the installation and the roof. Any lag screws, guy hooks, bolts or lead anchor bolts or shields which are put under tension must be firmly seated in the building structure so that they will not pull out under storm conditions, loosen or cause leaks. Choosing a good location for these anchors, seating them firmly so that they hold in the building frame (not just in the outer covering of roof or wall), and filling the edges of holes and screw threads with suitable sealing compound, all help to prevent trouble from developing.

Care of Walls, Grounds and Customers' Property. – Take every possible precaution to prevent damage to the customers' property. That requires giving attention to a lot of things that may seem trivial, but could add up to a lot of trouble.

Here are some typical examples of things to watch for:

1. On the customers' grounds, keep to regular paths. Of course, you know better than to step on flower beds, but in the early Spring you cannot easily distinguish the location of such beds, and may cause damage to growing shoots. Along the same lines, watch out where you set up a ladder.
2. In setting up a ladder and leaning it against the building wall, be careful not to scratch the wall with sharp ends of the ladder. Where this danger exists, wrap the top ends of the ladder rails with burlap or some other material that will protect the wall.
3. Be careful where you place antenna installation materials and tools. Of course, you will avoid flower beds, but watch out for possible damage to hedges, lawns, fences, windows and building walls. Above all *be careful not to place anything in a position from which it may fall.*
4. In the customer's home make it a practice not to move furniture or other customer property without first asking and receiving permission. It is amazing how touchy people can get about a dilapidated antique or a pet vase.
5. That brings up another touchy point. Don't sit down in the customer's home. You've got more sense than to soil the living room furniture with dirt from your work clothes or that tracked in from the roof or the outside, but the customer is never quite sure of that.

Provisions of the National Fire Underwriters and the Local Building Codes. – These Codes are designed to prevent structural or electrical installations that could develop into fire or safety hazards. While very little reference, if any, is made to television installations in these Codes, all regulations for radio or electrical installations would also apply in the installation of a television antenna and receiver.

Basically, these codes require a sound, sturdy construction for the addition of a mast or antenna to an existing structure. It is necessary to avoid any possible contact with existing power lines, and to keep antenna elements, wires, etc. from obstructing a fire escape or safety ladder, or otherwise presenting a potential safety hazard. Adequate provision must be made, through lightning arrestors, grounding and approved methods of electrical installation, for the prevention of fire or lightning damage.

Building Code requirements vary considerably throughout the country. But most codes follow closely the basic provisions of the National Building Code Manual. The provisions that apply to antenna installations were printed in Lesson5. They are important enough to be repeated here:

RADIO MASTS AND POLES

"(A) No part of any radio equipment shall be erected in, on, or across any public street, avenue, road, highway, or other public space, and no wire in connection with, used or intended to be used for radio reception shall be, when erected or in the course of erection, either over or under or within 10 feet of any electric light or power line.

(B) No wire, mast, guy or support, for any wireless aerial shall be attached or strung over any fire escape or fire ladder, nor shall any radio antenna which crosses the roof of any building be at an elevation of less than 7 feet above said roof.

(C) No pole or mast, guy or support for any wireless aerial shall be placed in any soil stack, vent pipe, or other plumbing appurtenance. No pole or mast, on a roof of a building and exceeding 20 feet in height, shall be erected without approval of the inspector of buildings; a sketch showing the dimensions, and proposed method of securing such pole or mast shall be submitted."

The need for avoiding possible contact with electric power lines is obvious. The real danger lies in the possibility of either the antenna or the power lines being blown down in a storm. The spacing must be sufficient so that even when such a breakdown occurs, there shall be no danger of a short circuit developing. Similarly, you do not want the antenna structure in a position over any public space where its failure or fall would endanger anyone.

The National Board of Fire Underwriters is particularly concerned about any conditions that could contribute to the danger of fire, or present a hazard to the occupants or firemen if a fire should occur, possibly through other causes. All fire escapes and safety ladders must be kept clear at all times. Any wires or antenna elements less than 7 feet above the roof could be a serious hazard to firemen, particularly at night.

The provision that masts, guys or supports are not to be placed in a soil stack, vent pipe or other plumbing appurtenance, needs particular emphasis. There are two reasons for that provision. First of all, masts and guys should be mounted firmly on the building structure. Vent pipes and plumbing appurtenances are not part of the structure of the building. In addition, anything attached to them could interfere with their proper function. This is particularly true if something is placed in them.

The Building Code provision for protection against lightning reads essentially as follows:

"Each conductor of a lead-in from an outdoor antenna shall be provided with a lightning-arrestor approved for the purpose, except where the lead-in conductors from antenna to entrance to building are protected by a continuous metallic shield which is permanently and effectively grounded. Lightning arrestors shall be located outside the building or inside the building between the point of entrance of the lead-in and the set, and as near as practicable to the entrance of the conductors to the building. The lightning arrestor shall not be located near combustible material nor in a hazardous location.

The grounding conductor (from the mast and/or the lightning arrestor) shall be securely fastened in place, and may be directly attached without the use of insulating supports.... It shall be run in as straight a line as practicable from the equipment to the grounding electrode.... The grounding conductor shall be connected to a grounding electrode consisting of a water pipe, driven pipe or rod or buried plate.... The protective grounding conductor for receiving stations shall not be smaller than #14 copper, or copper clad steel or bronze, or #12 aluminum wire. .... It is required that any electrical work done shall be performed by, or under the supervision of a master electrician. This work includes the wiring of any type outlet for receiver operations."

The provision that supervision by a master electrician is necessary for electrical work, refers to the direct connection of wiring or outlets to the regular electrical circuits. It does not refer to the plugging in of a receiver to an outlet already installed, or the placement of lead-in wires or extension cords in a television receiver installation.

These Code provisions are specific, and should be closely followed. Remember that your installation is subject to inspection by the local building inspector, particularly where a tall antenna or electrical wiring changes are involved.

Where there is any question about the local Building Code requirements for an installation, check carefully before proceeding.

Your Own Safety. – Essential as it is to avoid damage to the customer's property, and danger to others, it is also necessary that you prevent injury to yourself. Installing television antennas can be a hazardous job. Practically all of the accidents that do happen, however, are preventable, if the common sense rules of safety are observed.

Your company is far more interested in the installation man's safety than was the customer in the following true story. A two-man team was installing an antenna on the roof of a two story house with a steeply pitched peak roof. One man had put up a ladder at the rear of the house, where it came just above a newly installed gutter. While his team mate was getting supplies from the truck out in the front of the house, he climbed the ladder and started up the roof. He slipped, and slid back to the gutter. His foot struck the the ladder, knocking it to the ground. He slid further, until he was hanging by his hands from the gutter. As he was yelling for his partner to come and replace the ladder, the owner of the house – an elderly woman – looked out the back door, saw the installer dangling from her new gutter, and shouted: "Young man, let go of that gutter this instant, before you break it!"

Like most accidents, this one was preventable. For one thing, the ladder should not have been leaned against the gutter, and should have been set with its feet further out from the building. For another, the man should have used a safety rope in getting up the steep roof.

Safety on the Roof. – Working on a roof can be as safe as any other place, if you know what you are doing. But, you must *always* know what you are doing. The first problem is to get up on the roof. That could be by means of a ladder place outside the building, or through a hatchway inside the building. Both are safe enough when you are careful; but accidents have happened to those who forgot to be careful.

Wearing the right kind of shoes and clothes can help. It is best to wear gumsoled shoes, or to wear your rubbers, for roof work. All clothing should be kept snugly fitted to the body. Tool belts should be closely fitted and not hang loosely. Any item that you wear or carry that can catch onto a projection or roof, wall or ladder constitutes a hazard.

Working on any roof which is wet or covered with snow is not recommended, but it is certainly a condition that will be encountered. When working on a slippery or peaked roof, a safety rope is a must. A 70 ft. safety rope is a regular part of the equipment of the installation crew. Clear off any snow from a working area before beginning an installation.

Use the safety rope whenever working in a dangerous or precarious position. With one end tied around a chimney or some other secure structure and the other end securely tied around your waist you have a chance of escaping injury if you slip. But don't try any such stunts by yourself. Such jobs are best handled by a team, with one man doing the work, while the other watches for safety needs and supplies the needed materials and tools.

Installing a television antenna is no more hazardous than any other job requiring physical effort – *if* you know your job, give it your full attention, and use common sense at all times. *If there is anything you want to do tomorrow, be careful today.*

◆

NOTES

NOTES

NOTES

NOTES

TELEVISION SERVICING COURSE

PREPARED BY

RCA INSTITUTES, INC.

A SERVICE OF RADIO CORPORATION OF AMERICA

HOME STUDY DEPARTMENT
350 West 4th St., New York 14, N. Y.

LESSON NINE

ANTENNA INSTALLATION
(PART 1 - SUBURBAN LOCATIONS)

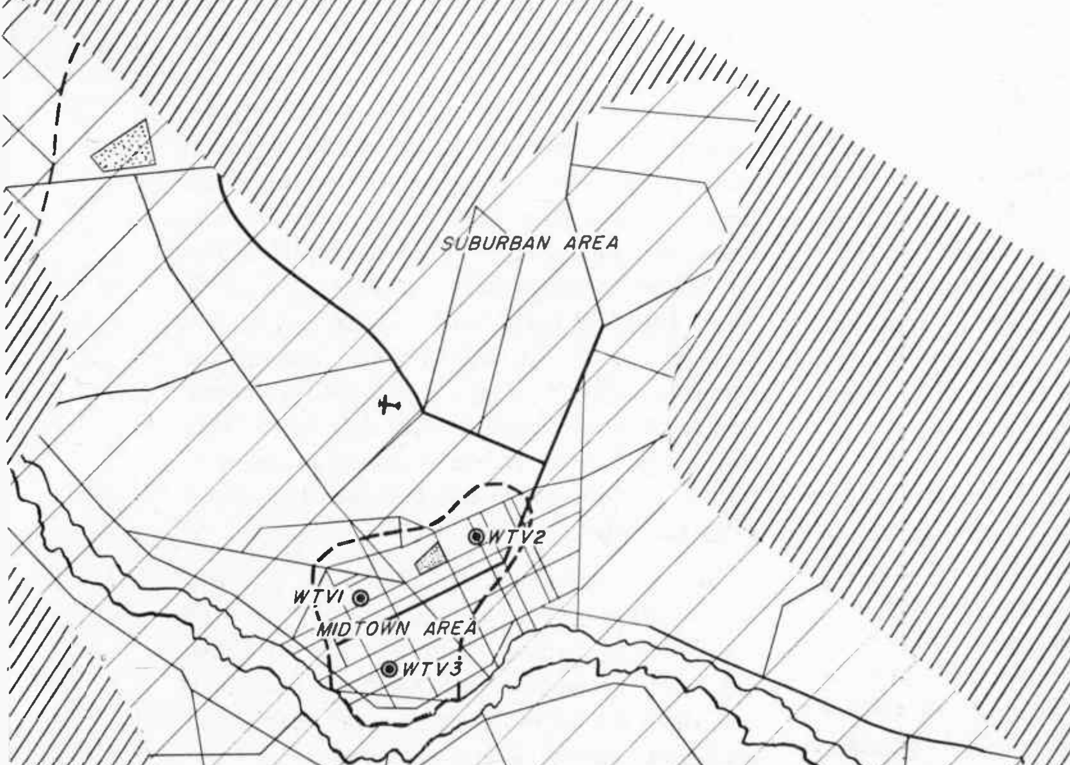

Lesson 9

GENERAL REQUIREMENTS

9-1. Before we start our detailed study of antenna installation problems in suburban areas, let's consider for a moment the requirements, to be met in making *any* television antenna installation, anywhere. These can be listed about as follows:

1. The antenna must pick up sufficient signal energy on all active television channels in the area to provide satisfactory pictures with any normal receiver.
2. It must be installed so as to remain mechanically safe and secure for a long period under any weather conditions to be reasonably expected in the region, and so that it will maintain its operating efficiency with a minimum of service and attention during its life.
3. It must comply with all safety rules of the company, local building codes and Underwriters regulations. This is very important.
4. It must be installable in reasonable working time, and with efficient use of materials and labor, so that overall cost is held to a moderate figure.
5. It must be satisfactory and acceptable to the customer on both a short and long term basis, and from the standpoints of both operation and appearance.

It is true that difficult receiving conditions will occasionally make it necessary to compromise somewhat on these requirements, but in general, this is the mark we shoot at when putting up *any* antenna, *anywhere*. With that settled, we can turn to consideration of how we go about accomplishing this sort of an installation.

The Three Kinds of Signal Conditions.—Right away it becomes apparent that television signals are not going to be the same in all parts of the area surrounding the transmitting antenna, and it's reasonable to think that the differences in signal strength and other factors will make the installation problem quite different in various parts of the station coverage area. In practice, this is very true indeed, and ~~we can~~ divide the coverage area up into three sections, in each of which the antenna installation problems are in general very similar. This lesson deals with the section of the coverage area where installations are generally easiest to make. We'll come to a definition of the term "suburban location" in a moment, but first let's study some general facts about the whole television business which affect the receiving problems.

Television transmitting equipment is intricate, delicate and expensive, and must be operated and serviced by highly skilled engineers and technicians. Also, studios for producing television programs are elaborate rooms that must maintain a lot of conditions that are hard to provide, except in specially treated buildings. Altogether, these factors and others relating to production of television programs make the costs of putting on shows much higher than is the case in regular AM radio broadcasting. This means that every station does its best to cover as large an area as possible with its transmitted signal, and to do so without adding unnecessarily to the already heavy expenses involved. One way to increase the area covered with a given transmitter power is to put the radiating antenna up very high, as you learned in previous lessons. But building tall towers is expensive, so a great many television stations put their transmitting antennas on the tops of tall buildings in the down-town areas of the cities in which they are located. This gives the additional advantage of putting them more or less in the center of the populated area they wish to serve, and it also means that program and control lines from studios and offices to the actual transmitter need not be long. Practically, this works out so that in most parts of the U. S., the television transmitting antennas are fairly closely grouped in the central portion of the metropolitan area they serve. This has a direct effect on the problems you have to handle in making antenna installations, as we shall soon see.

To understand this, take a look at this map of a metropolitan area with several television transmitters operating. The city shown is considered to be located on fairly level ground, so that there are no really severe radio shadows to modify the general coverage pattern.

Naturally the signals from all transmitters are going to be very strong in the area immediately surrounding the antennas. This, and the fact that the signals can be strongly reflected and re-reflected among the tall buildings in the central

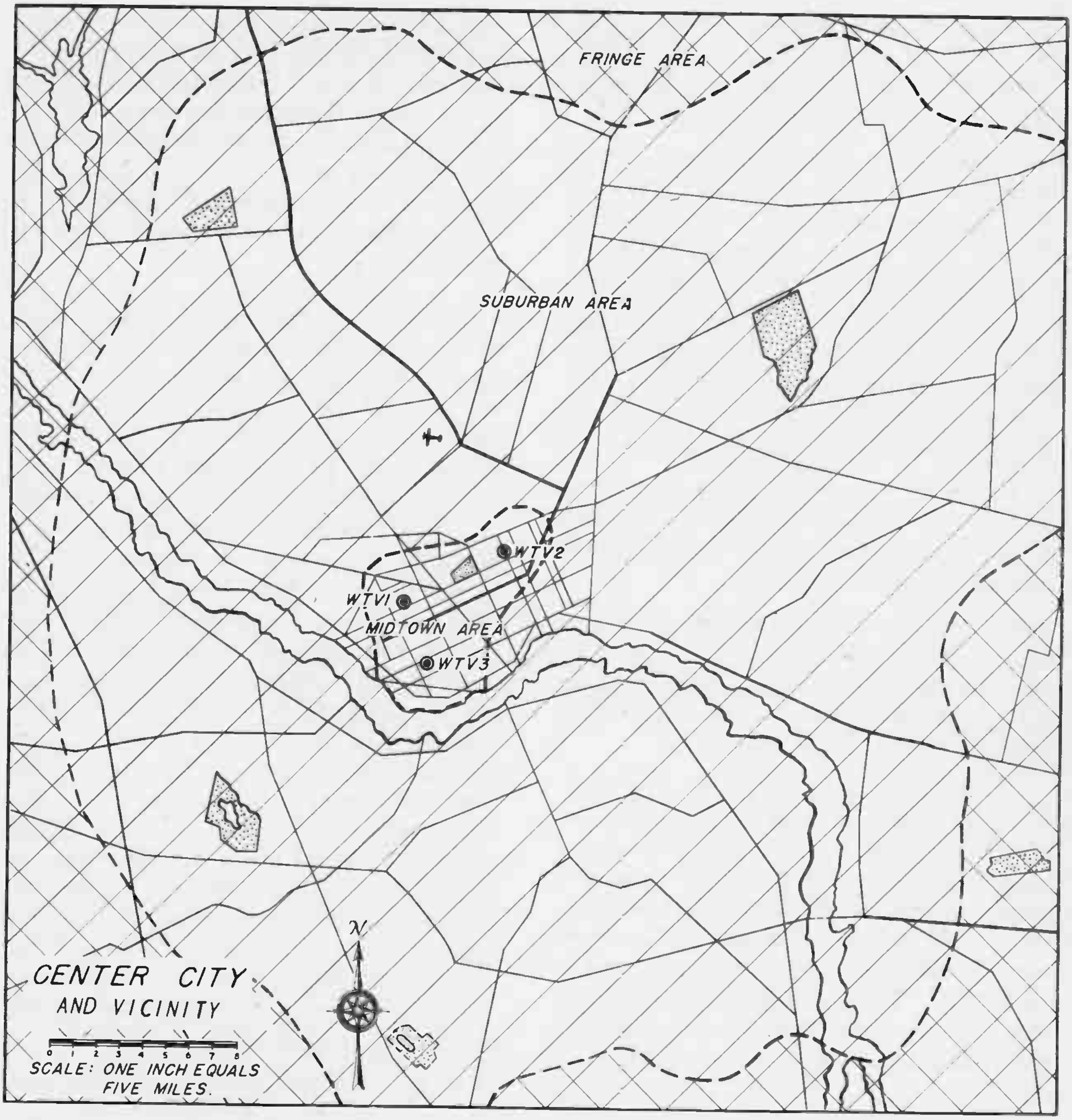

Fig. 9-1

area, produces a set of problems quite different from those you'll meet in the two outer areas. The extreme outer region shown with double cross-hatching on the map also has a special set of receiving problems, but here the trouble is due to very weak rather than very strong signals. It is in the broad band lying between the central strong signal area and the outer "fringe" area that we find the sort of conditions to be dealt with in this lesson. This band is shown on our map with single cross-hatching. We'll call it a suburban area, because it usually does take in most of the suburban residential region surrounding a large city, but you should keep in mind that the area is defined more by the kind of receiving conditions you find than by its actual geographic location. Thus, in cities where there are big hills or other such obstructions, you're likely to find some large radio shadow areas quite close in toward the transmitting antennas, where conditions will be more like those in suburban areas, or even like fringe area conditions.

"Suburban" Signal Conditions.—For this lesson, we'll confine ourselves to dealing with the conditions normal to ordinary suburban areas. These can be listed about like this:

1. Signals on all active channels will be strong enough to provide satisfactory pictures with a simple dipole and reflector antenna, mounted on a single mast section, on the roof of an ordinary dwelling or apartment house.

2. Usually, most of the transmitting antennas will lie in the same general direction from the receiving location, so that an antenna pointed to pick up a good signal from one will also be pointing somewhere near right for the others.

3. The noise and interference in the area will be of moderate strength, usually not severe enough to cause much trouble when an outside antenna is used.

4. The buildings in the area will be mostly ordinary one or two story dwelling houses, or apartment buildings of moderate size, say up to 10 or 12 floors, and there will be very few factories or heavy industrial buildings.

This does not mean that you'll always find all these conditions at any one location, nor does it mean that we can stick rigidly to this sort of classification. It does give us a general working idea of the sort of receiving conditions we're likely to find in such locations, however, and this can be quite a help in tackling installation work. The general architecture of buildings in a typical suburban location often looks something like this view over the rooftops.

Fig. 9—2

You'll notice quite a wide variety of antennas and masts in this picture, which was taken in a residential area on the outskirts of a large metropolitan area. This indicates mostly that television in general, and antenna design in particular, are fast-moving fields, a fact you must keep constantly in mind, because it is equally true of installation methods, and the materials you use in doing your job.

Keep Clear of Power Lines.—Before leaving this matter of typical conditions to be found in suburban locations, we can add a few more general remarks that also apply, although not so universally as the four specific points listed. You'll seldom find any large overhead power lines running so near the spot you've selected for the antenna that you need consider them in doing your work. In fact, in choosing a place for the antenna, you should try to keep it as far from such things as possible, if they do pass fairly near the building. However, if there *is* an overhead power line near the roof on which you're working, *BE ON YOUR GUARD!* Find a usable spot for the antenna as far from it as you can, and make doubly sure that there is *no* chance of bringing any part of the antenna into contact with the line while you are doing your work. Not only that, make sure the antenna is mounted in such a way that, even if it falls, or is blown down by the wind, it won't strike the power line. This may take some extra work, but do it anyhow, for the results of getting the antenna into contact with the power line are not only dramatic, they're usually irreversible.

Aside from safety considerations, power lines are very likely to be a bad source of noise, especially in wet weather, and you should avoid them for that reason as well. You're not likely to encounter such lines often in suburban areas, but they are worthy of great respect when you do. On the other hand, practically every home will have a regular 115 or 230 volt line coming in from the local power distribution line in the street, perhaps underground, perhaps directly from a pole. While this is relatively low voltage, it still should be treated with respect. *Do not* let the transmission line, the drill cable, or any other part of your equipment or materials lie across this line, or the telephone line either, for that matter. While these lines are well insulated when they are installed, the ravages of the weather sometimes strip them in spots, or leave the insulation so cracked and crumbling as to be no protection. Play safe and avoid trouble by keeping everything clear of them at all times.

PLANNING THE INSTALLATION

9-2. In addition to the general information that applies to just about *any* suburban location, there are always specific facts that are true of the particular district in which you're working. Some of this information will be common knowledge in the shop from which you operate.

Much of such information is given out directly to the operating personnel, either in the form of talks, or as memos or notices posted on the bulletin board. It is part of your job to keep yourself familiar with all such information. Also, there are other useful facts you'll discover for yourself during the course of your work. You should pass these on to your immediate superior as they come up, and of course keep mental track of them yourself, or perhaps even keep a notebook, if that is a help in your particular case. Naturally, men working together in the same field tend to talk shop a lot among themselves, and you'll find this is another way in which information gets spread around.

Things You Should Know As You Approach the Job.—In all of these various ways, you'll be receiving information about the district in which you work, and also occasionally from other sources such as the local radio dealers, or customers. This means that when you start out for an installation job in the morning of your work day, you already have quite a bit of specific information about the job ahead. From the address, for instance, you can locate the part of your district in which the installation is to be made. If you're up on the general receiving conditions in your district, you'll know by referring to your memory how the active channel signal strengths compare at the location, and whether or not there is some severe local problem, like a hill or row of tall buildings between your location and the transmitting antennas. Or again, it may be that the address is right on a main trunk highway through the city, where heavy traffic is likely to make the ignition noise troublesome. The point is, even before you get to the job, you can have some idea of how you're going to tackle it.

As you approach the location, you can add in some other bits of information by noting mentally what sort of antennas you see on the buildings, how tall the masts are, how the antennas are oriented (pointed), and other such things. You can easily add into your calculations such items as whether there seem to be any likely sources of strong interference very close to the location, whether the actual building is down in a valley, up on a hill, near a big overhead power line, etc. These are things you can observe for yourself as you drive up, and you'll be surprised how soon it becomes second nature for you to begin this "sizing up" process practically as you enter the neighborhood in which your installation job is located. This is very necessary, because the television business is already a very competitive one, and it is not enough merely to be able to solve your installation problems after a fashion. The job must not only be done, but it must be done quickly and efficiently, with little lost motion or waste of materials or time. That is why cultivating your powers of observation and evaluation is important, and indeed, why you are studying this Course.

Things to Find Out on the Job.—Under this subheading there are quite a few items of information that you definitely must know before you can do a good antenna installation. Some you'll get by asking the customer, others you may get from the superintendent of the building (if there is one), still others you'll have to secure for yourself by examining the building.

1. Where is the set to be placed? Even though we're concerned only with antenna installation in this lesson, you need to know this in order to decide about how you'll run the transmission line, where it can be brought into the room, and whether or not an inside antenna may be used. Ask the customer where the set is to be placed, keeping in mind what you know about not having too much strong, direct light on the face of the tube, etc. It isn't up to you to arrange the customer's furniture or living habits, but it's perfectly okay to point out any major advantages or disadvantages in locating the set. If the set is placed near an outside wall, and this will often be the case, as it keeps direct light from the windows from reaching the tube face, you may find it convenient to bring the transmission line in through the window casing. Or if the room is on the ground floor and there is a basement, the line may better be brought in through a basement window and up through a small hole in the floor. You should automatically keep such factors in mind as you go about getting the other facts you need, but don't try to decide the point until you have gathered all the data.

2. *Will the customer okay an indoor antenna, if reception is satisfactory on all active channels?* This is important enough to be worth some detailed consideration right here. Some customers will have strong fixed ideas on antennas, either for or against indoor installations. In such cases, it's best not to try to induce him to accept one, as it usually turns out that he changes his mind later, puts in a service call, and demands the outdoor installation which should have been made in the first place. On the other hand, the general public attitude toward built-in and indoor antennas has changed quite a bit since television receivers first began to be popular, and it's worthwhile to keep this trend in mind when you're talking to your customer. It used to be a sort of mark of distinction to have a television antenna on top of the house, at least for a lot of people. Now, however, television has become so generally accepted that the distinctiveness has mostly gone out of the antenna mounted on the roof.

Instead, many people have a tendency to regard a television set as better or worse than competing sets depending on whether it will or will not give satisfactory reception on an indoor or built-in antenna. Find out whether your customer will accept an installation using the built-in antenna, or an indoor antenna, if the built-in unit doesn't provide satisfactory reception. If the customer appears to be open minded on the subject, you can mention the various advantages the indoor installation affords. Here are the most important ones. For one thing, no part of the installation need be out in the weather, or exposed to damage by other outdoor accidental causes like falling tree limbs. Again, the customer can move the set around considerably more freely if there's no connection to a permanently installed transmission line to worry about. Many families move the center of their activities from the living room to a sun room or sun porch during the summer months, and in such cases its quite feasible to move the television set right along, if the internal or indoor antenna is available. Also, in the case of an indoor antenna, the customer can change the orientation, tuning, and location of the antenna to suit his own convenience, or to accomodate a new station coming on the air, which is not possible with an outdoor installation. And of course, there are many buildings where outdoor antennas are not permitted at all, in which case you can skip this part of your problem.

3. *Can satisfactory reception be provided with the internal or the indoor antenna?* This question can only be fully answered by a test of actual reception, and you should make such a check with the internal antenna as soon as the set is in operating condition, even though the customer has expressed a preference for an outdoor antenna. In some cases, good reception on the internal antenna will induce a customer to voluntarily change his mind about insisting on the outdoor antenna. This is good if it happens, but you should not count on it, or try to pressure the customer into such a change.

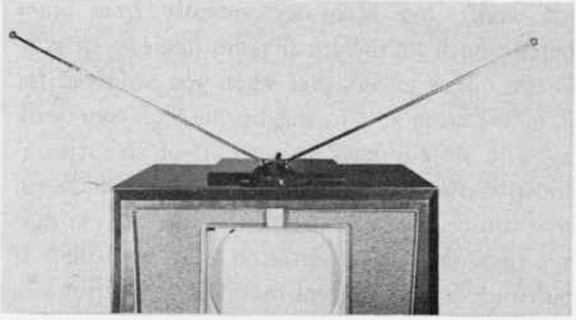

Fig. 9-3

4. *If an outdoor antenna is to be used, where*

can it be mounted conveniently, and still provide satisfactory reception? Supposing you've definitely learned that an outdoor antenna is required, and that it is permissible to erect one. Your next move is to decide where to mount it, and you must consider several factors while you're doing that. It must pick up plenty of signal, but it should also be mechanically secure, and in a spot where you won't have too much difficulty installing it. Then there is the matter of running the transmission line, too. Obviously it's good practice to keep the line run short and direct when you can, as it is better on all counts, but you'll have to use judgement in a good many cases. If, for instance, moving the antenna to a more distant part of the roof will provide a substantial improvement in reception, or make the installation a great deal easier, it may be worth the extra material and work required to extend the transmission line to that spot. Only experience will make you an expert at deciding such points, but you'll develop your ability by using common sense along with your specialized technical knowledge.

Usually, you'll find that there are several places on the roof or an outside wall of a house where it is feasible to mount the antenna and mast. Your final decision as to which one to use will often have to wait until you've tried each spot with the antenna temporarily connected to the set, as discussed in Section 9–4.

5. *What is the condition of the roof, or any other part of the building where you must work, in making the installation?* This is something you should be considering while you look for suitable locations for the antenna, for it may have a strong influence on your choice. Obviously if a part of a building is unsafe for you to work on, it is not up to you to risk your life or health trying it. You must give this some thought, for it's your neck, but you should also remember that if a structure looks that shaky, chances are it wouldn't hold the antenna for long either, even if you got it mounted successfully. Instead, you should report the matter honestly to the customer and look for other possible antenna sites.

Even if the roof will support you, you've got another matter to consider. If, in your opinion, you can't work on the roof without causing damage, you should report that to the customer, too, and hunt for another solution. After all, the roof is on the *top* of the house, and very few people give it much thought unless it actually begins to leak. The result is that many roofs get in pretty sad shape without anyone in the building being aware of it. Then when you go up looking for an antenna site, you may find that just walking across it is likely to cause leaks. In that case, *don't walk across it*, for you and your employer will be held liable not only for the damage to the roof, but for any damage the leak may cause inside the house. It's much better to discuss such a problem with the customer *before* you begin operations than it is to take it up ten days later when he's cleaning the fallen plaster off an expensive rug.

Fig. 9–4

You are less likely to find such conditions on the roofs of apartment houses than on private dwellings, but it can happen on the apartments too, so don't get careless. Some of the symptoms of a roof in bad condition are many split, loose, or missing shingles, sagging or weak spots that yield badly under a little hand or foot pressure, split or broken tiles, roofing paper from which all the coating material has been washed away by the rain, or which is cracked, torn or curled, or has seams which have opened up. While you're surveying the general conditions of the roof where you're planning to mount the antenna, don't forget you've got a transmission line to run, as well. Watch out particularly for loose or rotten rain gutters, shaky roof extensions, and on apartment houses, walls and chimneys where the mortar has fallen out, leaving loose bricks or coping stones that may easily be dislodged by a mere touch while you're working. This kind of thing can be extremely dangerous, not only to you and your partner below, if you're working in a team, but to the lives and property of other people as well. *Don't take foolish chances.* Instead, find another place for the antenna or transmission line, and inform the customer of the dangerous condition.

6. *What is the most practicable way to run the transmission line?* While you're studying the roof in connection with the antenna site, you should keep the transmission line in mind as well. This isn't usually a really tough problem, but you can save time by not losing sight of it during your survey of roof conditions. Remember that it is better not to have long horizontal runs of transmission line if you can help it, or long stretches where it cannot be supported by standoffs. The line should also be kept away from good electrical conductors like metal rain gutters, pipes, conduits, power and telephone wires, as these things can steal part of the signal, or may add interfering noises of their own. At this stage of the job, you can't usually decide on the whole run, but you can get a general idea of which part of the building you'll work on, and this will save time later.

7. *How about a grounding connection for the mast, and a place to install the lightning arrestor?* At present a revision of the part of the National Electrical Code of the Board of Fire Underwriters dealing with antenna mast grounding is being considered. It is likely that grounding of masts will no longer be compulsory, except in places where the local building codes and fire regulations specifically require it. Special local conditions may of course make grounding advisable in some installations, even though no code or regulation says so. In any event, your final word when in doubt must come from some person who will be informed as to local regulations and specially hazardous types of installation. In cases where you *do* need to ground the mast, have this in mind while you're sizing the job up, and try to make a short, direct connection to a suitable point. Watch for a chance to connect to the frame of the building, or a pipe of the cold water system, like this:

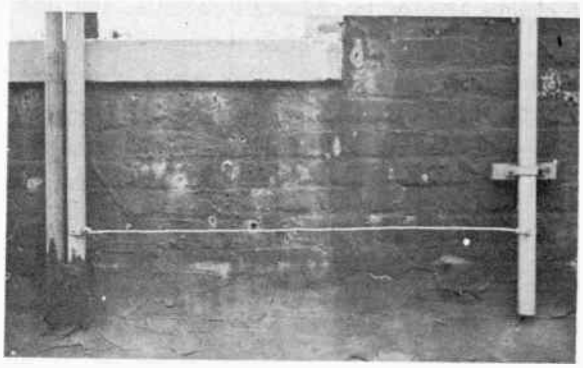

Fig. 9–5

In dwellings, look for a convenient run to a cold water pipe, or failing that, to a piece of open ground near the wall below the mast, where you can drive a ground rod. In some parts of the country, grounding to the vent pipe of the plumbing system is permitted, but here you must check with your superior as to local regulations. In any event, as long as grounding is required, you'll have to consider how best to do it when you're planning the antenna mounting. The lightning arrestor is usually fairly easy to handle, but don't fall into the careless habit of installing it on the mast. This not only is no real safeguard, it's against company standards as well. It will often spoil reception in wet weather, and thus result in a service call, and some unpleasant moments for you later. So far, none of the arrestors available is fully water proof, and this adds still another good reason for mounting it in a protected spot. Think of that when you're considering how to run the line.

SELECTING THE ANTENNA

9–3. Your choice of the antenna actually to be used in making the permanent installation will be influenced by several factors which we'll take in order. The first one to be considered may as well be the customer's preferences, since these may limit the selection right from the start.

1. The Customer's Preference.—One of the things you've found out, if you've followed the procedure described in Section 9–2, is what kind of an antenna the customer will accept. If he has indicated he'll accept any installation that will provide good, dependable reception, well and good. You have several possibilities, and can turn your attention to determining which of them is best. If, on the other hand, the customer has definitely decided he wants a certain kind of installation, you'll probably have to wind up giving him that one, or showing him why it isn't feasible. Then you'll have to get him to accept the installation you do find will provide proper reception, but usually this is no problem if he sees that the original idea doesn't work in practice. No matter *what* you do, however, try to respect the customer's wishes in the matter, remembering that his satisfaction is what actually pays the bills. Incidentally, don't forget that a convincing demonstration of good performance will often win wholehearted approval for an indoor or internal antenna.

2. Restrictions in the Building.—Many apartment and business buildings have restrictions as to what tenants may do to the outside of the structure. Sometimes no outside antennas of any kind are permitted. In other buildings, only window antennas are allowed. In still others, some antennas were permitted at first, but no additional ones can be put up without permission of the landlord. The tenant or the building superintendent usually has this information, and you will have gotten the information during your first talk with the customer. Here we're only concerned with the matter if it adds another limit to our choice of antennas, so if there *are* restrictions, don't waste any time considering antennas you won't be permitted to use anyhow.

3. Signal Levels on the Active Channels.—This is one of the most important factors influencing your choice of an antenna, so give it your best consideration. If the set has an internal antenna, make a check of reception on the active channels, even though you may not expect to use it for the actual installation. This will give you some idea of the signal strength at the location, and may influence your customer to a more favorable view of indoor installations, in case he has doubts about them. If results are poor with the internal antenna, it may still be worth trying the "V" type indoor antenna, to get a quick check of the signal levels. If this also is ineffective, chances are you're going to have to use an outside antenna of some sort anyhow. Usually, signals are much stronger outside the walls of buildings than inside, because various conductors or partial conductors in the walls act to partially shield the enclosed space. Also, the signals within buildings are likely to be badly scrambled by multiple reflections, shadows, etc., so its only common sense to move the indoor antenna around in the room to various positions, before you decide definitely that the indoor signal level is unusable.

4. Noise, Interference and Ghosts.—While you're checking the signal levels on various channels, be on the lookout for noise, ghosts, or interfering signals that might make otherwise usable signals unsatisfactory. These two trouble sources are so important that they will be covered in detail in an entire lesson later in the course. At this point, you need only get a rough idea of whether or not there *is* much noise and interference in comparison to the signals. If there is, it's going to influence your choice of antennas in some ways. For instance, if the noise originates within the building, it will probably give much more trouble with an indoor antenna. Sometimes the source of the noise can be found and eliminated, but this is likely to be a long job, and not one you can undertake while making the installation in any case. Instead, you will probably have to try an outside antenna located as far as possible from the noise source, and hope for the best.

Where ghosts are concerned, the situation may be somewhat better. Even with the indoor antenna you may be able to find a position for it which will reduce the ghost image enough to permit good reception. In fact, it is sometimes possible to do a better job of eliminating a troublesome ghost inside a building than outside, if it is a steel frame structure, but this is not the place to take up such problems in detail. Here, you need only take note of the ghost problem if it shows up on your first try with the internal antenna, and see whether or not you can improve things with the indoor antenna, which can be pointed in various directions more readily.

5. ***How About the Directions of the Transmitting Antennas?***–In most suburban locations, this isn't likely to be much of a problem. This is because the transmitting antennas are usually mounted on the tops of tall buildings in the downtown area, and thus lie in the same general direction, as seen from a suburban location. However, as television expands, some transmitters will undoubtedly be located farther from the center of the metropolitan area they serve, and it may turn out that you are faced with the problem of receiving programs from at least two rather widely separated directions. In this case, the built-in antenna may be effective, since its directivity pattern is fairly broad. It is also possible to point any antenna in a compromise direction somewhat between the best direction for either of two stations, and still get a satisfactory picture on both. If you're up to date on the location of the various transmitting stations in your city, you probably will know about any direction problem before you even get to the job anyhow. The important thing is to get good pictures of course, and if this can't be done with the simpler antennas, you may have to choose one of the more complex types, such as the High-Low antenna. This is often a good solution if the station bearing in a different general direction than the other transmitters is in the high band, with the others all in the low band, or vice versa.

In case the stations *do* bear in several directions from your location, and the customer insists on receiving them all well, you may have to use an additional antenna, usually required only in midtown areas. This would be at extra cost, and in view of this, it's worth while to check the performance of the simpler antennas very closely before you give up on them. Incidentally, don't forget that the simple V-type indoor antenna can easily be pointed to receive from almost any direction, providing the signal is strong enough.

6. ***What Channels Are Active?***–The answer to this question also has some bearing on your choice of an antenna. Obviously if there is *only one station* operating on a low channel, almost any of the antennas will be suitable, and other factors like economy of time and material will govern your choice. But suppose the location you're working at is part of a big metropolitan area where there are five or six active television channels? Obviously the antenna you choose must give good reception on as many channels as possible, so you may find that the simpler ones won't fill the bill. This can easily happen if one of the high channel stations is on the other side of town from you, with perhaps some tall buildings intervening. It boils down to a case of trying with the simplest antenna that your experience and the other information at hand indicate might work.

7. ***Cost and Other Considerations.***–Of course you have to consider the cost of materials and labor when you're deciding which antenna to select. But in most suburban locations, you'll find that antennas more elaborate than a simple dipole and reflector, or possibly this combination with wings added, will seldom be needed. Naturally you should select the least expensive antenna that will provide satisfactory reception, keeping in mind of course that it is expected to provide good results through all sorts of weather. Here again you're not likely to run into trouble in suburban locations, but you may do so in fringe area work, or in the down-town district. This is true not because the weather is different in the suburbs, but because there is usually more signal to spare in proportion to the noise and interference present. In midtown or fringe areas, even a partial loss of signal in bad weather may degrade picture quality enough to result in a service call.

PRELIMINARY PLACEMENT AND ORIENTATION

9–4. By "*placement*", we mean choosing the actual spot or point in space where the antenna picks up the required signal energy for the receiver. We'll use this word throughout the lesson when referring to the process of finding the actual spot on which the antenna is to be mounted, in order to avoid confusion with the more general meanings of "place" or "placing". In radar and microwave antenna work generally, the word "site" is commonly used in connection with the actual spot where an antenna or other piece of apparatus is located, and the process of finding the best spot for mounting an antenna is often called "siting" the antenna. However, this usage has not yet been taken up by workers in the television field, so it is mentioned here only for your information, in case you come across it in further studies.

Notice that when we were talking about the placement, nothing was said about the position or spatial attitude of the antenna, that is, whether it was horizontal, vertical, slanted, or spinning like a pinwheel. *Placement* of the antenna only means finding the spot in space where it will perform as we want it to. *Orientation* is the process of getting it pointed in the right direction, tilting one end up or down, or rotating it about any of its three axes as we hunt for the best signal response.

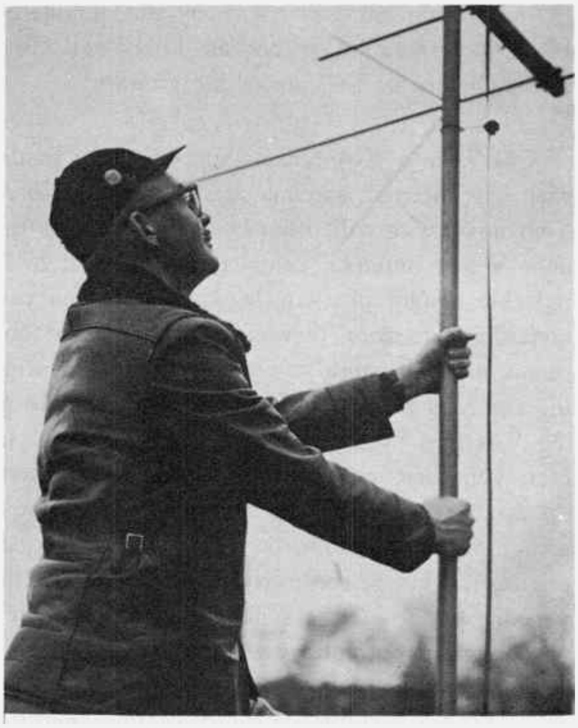

Fig. 9–6

It's advisable to use these two words "placement" and "orientation" for these specialized meanings, because commoner words like "location" and "position" are rather loose and overlapping in common usage. Since the information in these Lessons must be definite if it is to be of any use to you, we'll use such special terms where they're needed, after defining them, of course.

Procedure.–Whether you're working with an indoor or outdoor antenna, the same general considerations you learned in Section 9–1 still apply. That is, the antenna must pick up sufficient signal on all channels, must be acceptable to the customer, etc.

Placement of an Indoor Antenna.–Let's consider first that an indoor antenna is acceptable, and you're ready to begin placement and orientation. The first thing to do is choose a trial place. This will be influenced by the location of the set, the doors and windows in the room, the direction of the television stations, and probably by the customer's wishes, as well. Obviously you're not going to be permitted to leave any part of the installation obstructing doors, or interfering with normal use of the furniture, to say nothing of the decorative scheme in the room, so you must plan right from the start to get satisfactory reception without damaging the decor, or disrupting the customer's furniture arrangement.

Signals are almost sure to be weaker inside the room than they are only a few feet away, beyond the outside walls of the building. This is due to the shielding effect of various conductors in the walls, ceilings and floors, such as pipes, conduits, metal lath, etc. These things also cause the signal strength to show sharp variations at different points within the room, because energy reflected from them adds to or subtracts from the direct energy reaching the antenna, dependent on whether it is in or out of phase with the direct wave at that point. Most of your job from here on really consists of trying to get an acceptable antenna (usually either the built-in internal one now standard with most models, or the V-type) into a place, and orienting it so that it picks up enough signal on all active channels, and isn't too sensitive to noise, interference, or people moving about in the room.

Suppose we begin by trying with the internal antenna connected to the receiver input terminals.

The set should be in the place and position in the room that the customer has decided upon. Test the reception on all the active channels, keeping track of which channels are acceptable and which are bad, and the reasons they are bad, such as snow, ghosts, etc. If most channels are pretty bad, chances are the internal antenna is not going to be adequate, unless you can make a drastic all-over improvement by moving the set to a better spot in the room or building. Find out from the customer if this is acceptable, keeping in mind that you *may* get a large improvement in signal strength if the set with its internal antenna can be kept reasonably well away from large metal structures like radiators, or walls in which the plaster is carried on expanded metal lath. This type of construction is common in office and apartment buildings, and has the effect of acting as a more or less effective shield, particularly at certain frequencies.

How About the Internal Antenna?—Right here is as good a place as any to say some things about the internal antenna, and the whole idea of indoor antennas generally. You have enough understanding of the general nature of radio wave propagation by now to realize that if enough of the radiated signal doesn't reach the antenna, there just isn't going to be any picture. On the other hand, if there's enough signal energy present at the antenna spot, satisfactory pictures can be had, *if* the antenna is capable of intercepting it and delivering it to the transmission line. There are no miracles involved in this process, and no manufacturer can do more than try to provide antennas that will make the most efficient use of the signal energy available at the antenna.

It is advisable to make no exaggerated claims of "miracle" internal antennas that make outdoor installations unnecessary, or to try to deceive the public in any other way in this matter. You'll do well to stick to this policy yourself in your dealings with customers, particularly in this matter of indoor versus outdoor antennas. All in all, indoor and internal antennas do about as good a job as can be expected, at the present state of the radio art.

If your customer questions you about these matters, you can say quite truthfully that the indoor antennas work just about as well as any others occupying the same space in the room, but that no indoor antenna can provide satisfactory reception in all locations, and under all conditions. Of course, you should keep in mind that research and progress in antenna design is continuing as the television art advances.

Getting back to our trials with the internal antenna, we can consider what to do if reception is rather poor on the first try. If no other spot in the room is acceptable to the customer, you can try turning the set slightly and checking the effect on the pictures. If this is effective, and the orientation of the set is acceptable to the customer, you're in, and can count yourself lucky. However, the chance that orienting the set will do the whole job is not too good, unless you can try other spots for it also, to help the thing along. This is due to the rather scrambled pattern of the television waves in the room, and is *not* true of outdoor antennas, if they are fairly well clear of conductors in their immediate vicinity.

Checking a V-Antenna.—Suppose your trials with the internal antenna are not satisfactory. Your next move will often be to try with the indoor V-type antenna, connected to the set by a suitable length of twin lead. This gives you considerably more leeway in placing the antenna, and you can also alter the tuning by sliding the rods in or out, or changing the angle of the V formed by the two arms of the dipole. In fact, you come up against a problem right here that sooner or later arises to plague every man in a technical profession, be he doctor, lawyer, or engineer. This is the matter of juggling several variable factors at the same time, each of which can drastically affect the results obtained. In this case, the variable factors are the placement of the antenna, its orientation, tuning, and the angle of the V made by its two arms. You can see that just fussing with all these things at random is going to get nowhere, except by pure dumb luck. So, don't do it.

Instead, begin with the antenna arms extended to about three quarters of their full length. and with each arm about five or ten degrees above horizontal, like this:

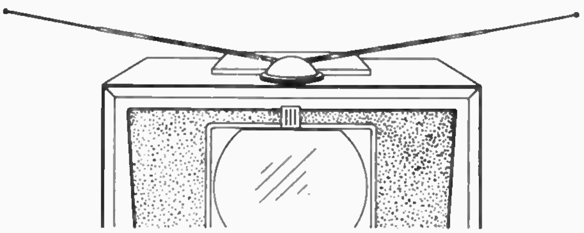

Fig. 9-7

With the antenna adjusted so, and the set tuned to the lowest active channel, try moving the antenna to various likely places in the room to see what happens to the picture. Each time you put it in a new place, such as on top of the set, on a table by the window, etc., orient it for best picture quality, and compare this with what you had before. When you've found a place and orientation where the picture on this channel is acceptable, or the strongest of several trial spots, then switch the receiver to each of the other active channels, and note the picture quality. If they also are acceptable, offer yourself mental congratulations upon being a very lucky fellow, and get ready to demonstrate the reception to your customer. If some of them are definitely poor but not really unusable, leave the set tuned to the poorest station and try the effect of re-orienting the antenna, keeping a mental note of the original orientation. If changing the orientation no more than fifteen or twenty degrees will bring the signal up to a usable level on the poorest station, leave it in the new orientation and try all channels as before. You may find that signals are now enough better on the weak stations to be acceptable, or you may not.

Recheck on Weak Channels.—If some channels are still weak, try orienting on *them*, even making some notes and diagrams on a sheet of paper if you need them. Don't be afraid to make some experiments if the situation looks promising, because it is definitely worth while when there is a chance that an outdoor antenna will not be needed. Here are a few more suggestions as to how to proceed with the V-type antenna. If the orientation for good signals on the weaker stations does not vary too much, try placing the antenna at the best compromise orientation, and varying the angle of the arms up to about 45 or 50 degrees above horizontal, keeping the two sides fairly near the same angle at first. If this is not productive, you may be better off moving the antenna to the next best possible place, and trying again. In some cases, you may find that a channel that is weak at one place will be okay at the other. In such cases, the customer may be willing to move the antenna to the new spot when receiving that station. But bear in mind that there are limits to the patience of customers, who can't be expected to conduct any long rigamarole of antenna juggling every time they change channels. If a good many trials at various spots in the room doesn't do the trick, and an outdoor antenna is permissible in the building, you may be wiser to begin with that expedient without delay.

However, there are some other factors, in addition to lack of signal strength, that can cause reception to be unsatisfactory, and we may as well discuss them before we climb up on the roof. These are ghosts, noise, interference, and receiver defects, which we'll take up one at a time.

Defective Receivers.—In spite of careful inspections at the factory, a receiver occasionally reaches the customer's home with some minor defect, as you learned in Lesson 4. This is not the place to explain how to service it, but we *can* use a test for making sure that the receiver is really at fault. Probably the best way to do this is by checking the picture on all channels, even though the signals are not all of the same strength. If the same picture defect (such as no sound, picture squeezed or stretched) shows up on all stations, chances are the trouble is in the receiver. Chances are, but it isn't certain sure; for if you seem to have fair pictures with what looks suspiciously like some form of outside interference, it may *be* interference getting into the receiver i-f amplifier directly. A partial check on this can be made by comparing the extent of the interference when receiving a weak station and then a stronger one. If the picture defect seems to be less noticeable on the strong signal, it may be i-f interference, and you'll have to check further. In any event, it isn't likely that a defective receiver will give this result, particularly if it shows a normal raster, and all the adjustments seemed to operate as usual when you were setting up the receiver.

Ghost Images.–Television ghost images are produced in a number of ways, some of which can be dealt with by installation men. The most common causes are as follows:

1. Signal energy reaching the receiving antenna later than the direct signal energy that produces the main picture.
2. Signal energy reflected back and forth between the receiver and antenna in the transmission line.
3. Misalignment in the receiver i-f amplifier, or overall misalignment and interaction between the receiver i-f and r-f amplifiers.
4. Video transients generated in some part of the transmitting apparatus, and actually radiated from the transmitting antenna.

Of these causes, the first one mentioned is by far the most common. It is usually signal energy reflected from some object such as a building, gas tank, bridge, etc. When such reflected signal energy reaches the receiving antenna somewhat later than the direct signal, it produces the characteristic ghost image displaced to the right of the main picture on the kine screen. The displacement is due to the fact that the reflected signal is travelling a longer distance to reach the receiving antenna than the direct energy, as you learned in earlier Lessons. Careful orientation of the antenna will often make considerable improvement, if you have a troublesome ghost on a particular channel. The idea is to turn the antenna slowly while checking the relative intensities of the main image and the ghost, until you find an orientation where the difference between the two images is greatest. Of course, it is not always possible to make much improvement in this way, particularly when the object reflecting the waves is located in the same general direction as the transmitting antenna. Don't forget however, that moving the whole antenna up or down a few inches or feet will often make a big difference in such cases. This is because the signal at the antenna is affected by surrounding objects, such as the roof of the building you are on, for instance, and thus small changes in height can influence the strength of both the main picture and the ghost.

In cases where the ghost is produced by reflection from some object that bears twenty or thirty degrees off the direct line from transmitting to receiving antennas, orienting the antenna carefully will often solve the whole problem. This is particularly true if you are using an outdoor antenna of the dipole and reflector type, but even the indoor and internal antennas have some directivity which can be used to advantage in dealing with such problems.

If the receiver is in order, and the transmission line and antenna are properly matched there is little likelihood that a ghost will be produced by reflections up and down the transmission line. Such action can only take place where there is a substantial impedance mismatch at *both* ends of the transmission line, and with modern receivers this mismatch at the input is quite small, even at the highest and lowest television channel frequencies. Also, the line run would have to be very much longer than you are ever likely to need in a suburban installation, to produce a ghost displaced far enough from the main picture to be seen separately. Still, if you are doubtful of the cause of a certain ghost, you can check it by folding a piece of tinfoil or other thin metal loosely around the twin lead near the receiver, and moving it slowly along the line while you watch the screen. If the ghost disappears, with the metal sheet at certain points along the line, it is produced by reflections in the line. If it does not, the ghost is from some other source. Incidentally, in making this test, you may often find that both ghost and main picture vary up and down in intensity as you move the foil. This merely indicates some standing waves on the line, due to some unavoidable unbalance or small residual mismatch, and the effect is usually not large enough to be important.

Misalignment in the receiver i-f amplifier, or overall misalignment and/or interaction between the receiver i-f and r-f amplifiers can cause a ghost to show up also. Naturally this is rather unlikely with a new receiver, yet it *can* happen, due to a defective tube, or severe jarring of the receiver in transit. Here's how you detect it. While watching the screen carefully, slowly adjust the fine tuning back and forth across the correct position, as judged by the sound quality.

If the ghost is being produced internally, chances are the relative intensity of the ghost and main picture will change quite a bit with adjustment of the fine tuning. The spacing between them on the screen may also vary during this test. The only remedy, of course, is a service job on the receiver. Incidentally, don't assume that if the trouble doesn't show up on another channel, that the ghost is not caused by this sort of misadjustment. In cases where the trouble comes from overall interaction between i-f and r-f amplifiers, it may only happen on one channel, although it is quite likely to show up on several.

If the ghost is being generated in some part of the transmitting apparatus, and radiating from the transmitting antenna, there's nothing you can do to eliminate it. But there *is* something you should do, and that is, make the matter clear to your customer. There just isn't any simple test you can make at the receiver to prove beyond a shadow of doubt that this "built-in" ghost is produced at the transmitter, but you can get it narrowed down to that by a process of elimination and making a cross-check with your shop. First, make the checks already given, to make sure it isn't in the receiver, or due to transmission line reflections between the receiver and the antenna. Next, check all the other channels for a ghost of about the same intensity and displacement, particularly any channel whose transmitting antenna is known to be fairly near the suspected channel antenna. This won't be very conclusive, but it may show up something if you find a similar ghost. Lastly, call the shop and ask them to check the channel on a receiver known to be in perfect shape. If they also find the suspected ghost, *and it is about the same intensity and displacement at their location too,* it may very well be a ghost produced by a video transient in the transmitting gear.

In this case, you must explain this to the customer, and inform him that at the present state of the television art such things still do show up occasionally. Of course, you are not supposed to do any buck-passing, or running down of the transmitter people. They are very likely aware of the situation and working hard on it, and a lot of irate telephone calls will not help them solve the difficulty. You can assure your customer that every effort is being made to get rid of such defects, which will not only help you avoid a call-back for something you can't do anything about, but will keep the heat off the transmitter people as well.

Turning back from the general subject of ghosts, we can give some attention to indoor antennas. It is important to remember that they may not be as effective in reducing ghost trouble as an outdoor installation. This again is due to the scrambled wave situation within many structures, and not much can be done about it in most cases. If you are stuck with bad ghosts while trying an indoor antenna, the outdoor job may be the answer, and you should make a quick check with a temporary dipole *and reflector* type antenna. The reflector is important when dealing with ghosts, as they are often produced by reflected energy arriving from the back of the antenna, and the reflector acts to minimize pickup from that direction. Since the reflector also acts to sharpen the directivity of the dipole somewhat, it increases the effectiveness of orientation in getting rid of ghosts due to *reflected waves arriving from the sides,* as well.

Interference and Noise.—Right here we run into one of the most severe headaches in the present television picture. Interference from other radio services, or electrical noises produced by diathermy machines, fluorescent lamps, neon signs, electric motors, and auto ignition all act to make good television reception more difficult. Other things remaining the same, they are more troublesome on weak signal channels, and often the only way to deal with them (so far as antenna installation problems are concerned) is to use an antenna providing substantially stronger signals on the channels in question.

This is particularly true when the interference or noise is produced by devices within the same building as the set, since orientation alone will seldom cure such troubles. This usually requires an outdoor antenna, which often has the double effect of increasing television signal strength and weakening the interference. This is not the place to go into details about curing interference troubles. They are worthy of an en-

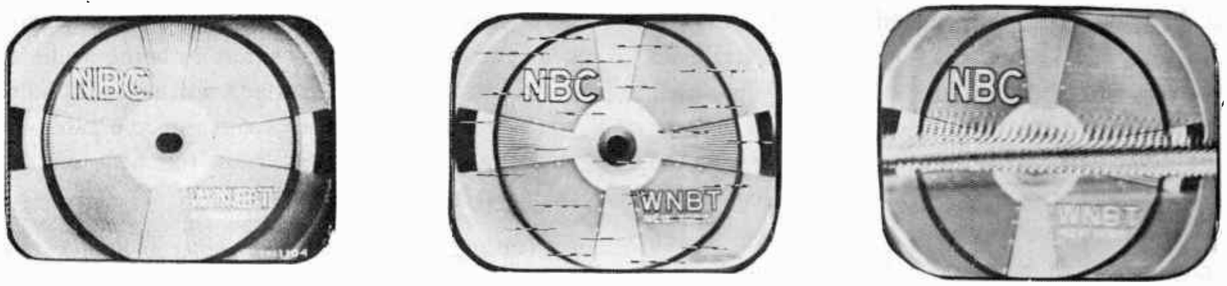

Ghost Ignition noise Diathermy

R-f interference Severe FM interference Barkhausen oscillations

Fig. 9—8

tire lesson, which comes later in this Course, but right here is as good a place as any to show you what the more common types of noise and interference do to the picture, so you can use the knowledge to some effect in siting and orienting antennas. Fig. 9-8 shows several kinds of defects, with their causes listed under them.

If you recognize the interference pattern on the screen as being due to some other radio service, such as amateur or commercial communications, it may be worth while to check quickly for the source to see if something can't be done about it. *The Federal Communications Commission* has strict rules about the amount of harmonic energy any service is permitted to radiate, and it is the responsibility of the offending party to do whatever is needed to eliminate the trouble, *if they are at fault*. However, you can do your part by trying to orient the antenna in such a way as to reduce the effect of the interference without losing too much signal strength. In fact, you usually have to follow the same procedure with noise as well, and only actual practice will make you very skillful at this.

Ways of Reducing Interference.—One of the things you *can* do is try to find out if the interference is being picked up on the transmission line, the antenna, or both. If disconnecting the antenna and leaving the line connected to the receiver has only a small effect on the interference or noise, you may be able to improve the situation by using coaxial line with a Tri-Filar transformer at each end. This type of line picks up very little energy along its length, if it is properly used, and it may make the difference between good reception and none at all. However, you should do all you can by orienting the antenna before you turn to coaxial cable. In extreme interference cases, the use of Twinex line may be necessary, but this will practically never happen in a suburban type location. When an interference problem of this seriousness shows up, it usually requires the services of a man experienced in curing interference troubles anyhow. Incidentally, one other test is worth making, to check how the noise or interference is getting into the set. Disconnect the transmission line from the input terminals, and check the screen for evidence of the offending signals. If they are still present, they are either entering via the power line, or are being picked up directly on the wiring of the receiver. These are problems to be dealt with elsewhere in the course, but knowing of this possibility may save you a lot of wasted effort juggling antennas.

If disconnecting the antenna from the transmission line makes a large reduction in the noise and interference as well as in the signals on the television channels, *careful orientation* may help a lot, for this shows that both desired and undesired signals are coming in via the antenna. Obviously if they are arriving from different directions, it may be possible to find an orientation which favors the television signals. But if they are arriving from about the same direction, or if the noise or interference is of really great strength, this may not help, either. In that case, the only hope is to tackle the source of the interference itself, unless you can put the antenna on another site where it will pick up very much less of the undesired signal, and this is usually impossible.

General Orientation Information.—Getting back to the general matter of orienting the antenna for best results, there are certain items of specific information in earlier lessons that are especially important. One of these is the group of antenna characteristics you studied in Lesson 6. In getting rid of an interfering noise or signal, the idea is to turn the antenna so that the desired signals are still received with usable strength, while getting one of the *nulls* of the directivity pattern pointed toward the noise source. In case that word "null" sounds unfamiliar, it just means one of the deep notches in the pattern, where the line of signal strength drops well down toward zero. You can get the idea by taking another look through Lesson 6, and studying Fig. 9-9, where the various parts of the directivity pattern are labelled.

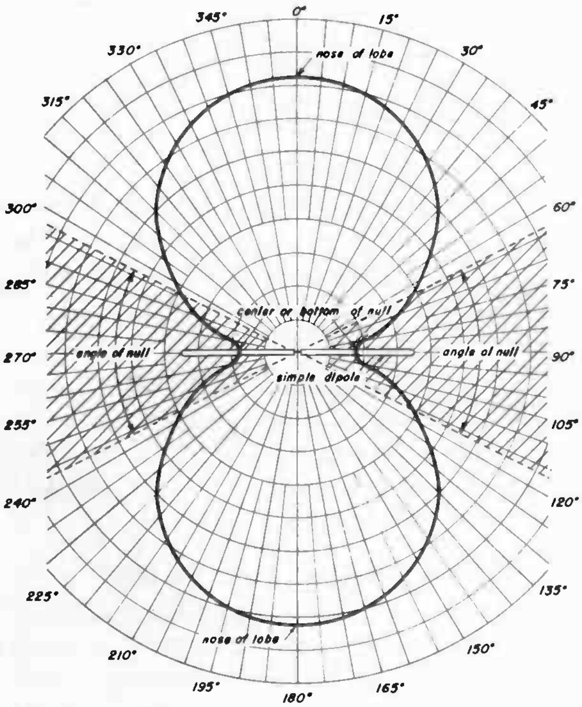

Fig. 9–9

It's easy to see from Fig. 9–9 why a simple dipole antenna without a reflector isn't very helpful in getting rid of a ghost or an interfering signal. The nulls in its directivity pattern are confined to two fairly narrow arcs off the ends of the dipole rods, as shown by the crosshatched areas. Obviously, unwanted signals arriving from any direction within the arcs of the major lobes can cause trouble, and if the source of such an unwanted signal is fairly near a direct line through the transmitting and receiving antenna, orientation won't help much. Now look at Fig. 9-10, which shows what happens under these circumstances.

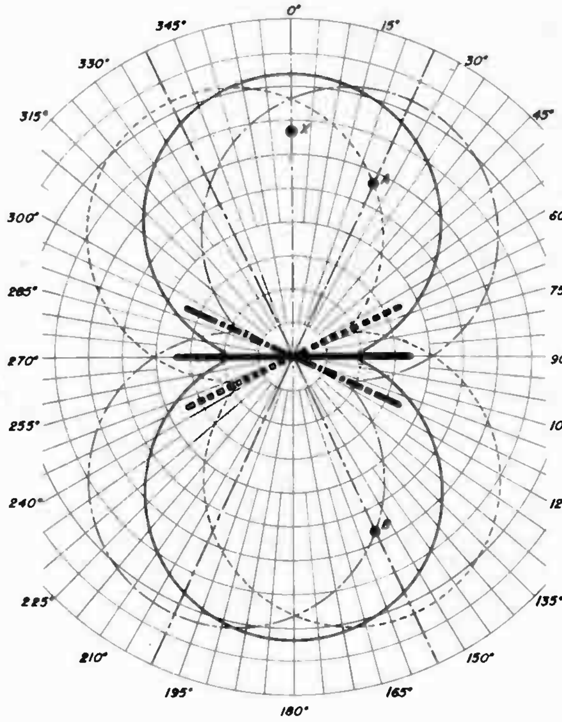

Fig. 9—10

The solid line shows the dipole pattern with the antenna pointed (oriented) for maximum signal from the desired station at point X. You can see that the undesired signal from a source at either point A or B will enter the receiver practically as strong as if you had oriented on it.

How to Use the Directivity Pattern.—Now notice that swinging the orientation to the positions indicated by either the dotted or dashed outlines does little to help the situation. The effective nose of the lobes of the dipole directivity pattern is so broad, and signals fall away so gradually on either side, that the antenna can't help much in this situation. Not only that, the actual measured pattern of such antennas is made even poorer by the presence of other conductors within a few wave lengths of it. You know already how common that condition is, particularly in indoor installations. In practice, the nulls of the pattern are likely to be still narrower, and a lot shallower than they appear in the theoretical diagram of Fig. 9–9. Instead, they are likely to look more *like this:*

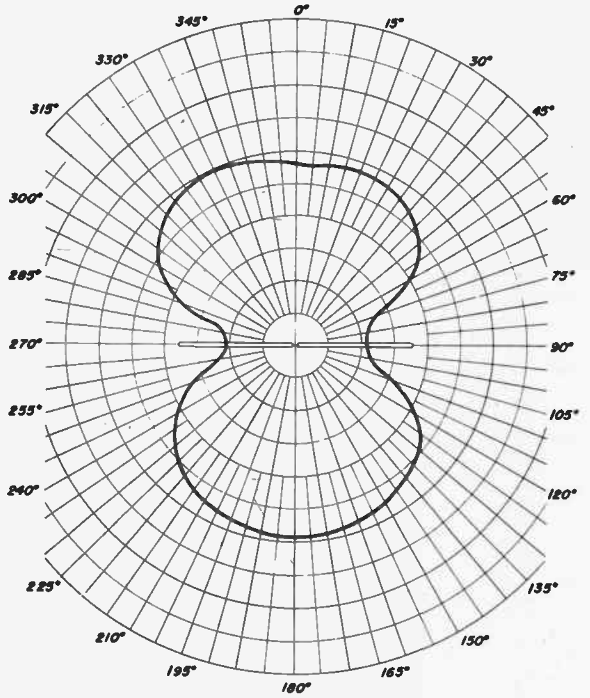

Fig. 9–11

If an antenna should receive an interfering signal right in the deepest part of the null, the signal voltage delivered to the receiver would only be a third to a half of maximum. This maximum signal would be obtained with the antenna oriented directly on the source of interference. The reduced signal is not small enough to be considered negligible, and that is one of the reasons why the dipole with reflector is more helpful in tackling such problems. Adding the reflector produces a pattern like this:

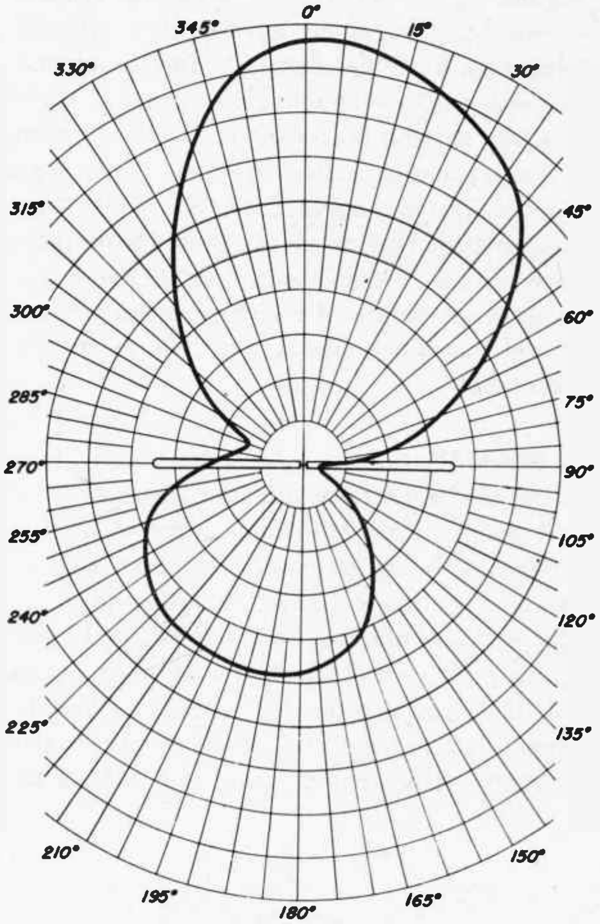

Fig. 9–12

You can see that the main lobe on the front side of the pattern is longer and narrower, the nulls at the ends are wider and deeper, and the signal from the back is very much weaker than is the case with the simple dipole. In fact, we can practically consider that the "back" lobe is wiped out by the reflector, and this makes it possible to minimize or eliminate the effects of unwanted signals arriving from any direction not contained within the main lobe.

Again, this ideal pattern is modified by the presence of other conductors in the vicinity of the antenna, but the effect is not quite so strong with the dipole and reflector combination. Also, the space taken up by this antenna practically forces us to mount it outside, where it is more likely to be free of such surrounding influences. All of this information indicates strongly that when the desired signals are weak, or there is serious interference, ghost or noise trouble, the outdoor antenna is still likely to be required.

Effect of Changing Height of Antenna.—Incidentally, before we leave the general matter of directivity and orientation (temporarily, of course), one other general statement is pertinent. Turning the antenna about its vertical axis is not by any means the whole story. Moving the antenna up or down a few inches or feet will often produce large changes in signal strength, ghosts, and interfering signals and noise pickup. Be sure to keep this in mind in all antenna work, and particularly so when working on flat roofed buildings. Quite often such an adjustment measured in inches will make all the difference between usable pictures and hash on the screen.

Now let's have a look at the problem of placing and orienting a *dipole and reflector type* outdoor antenna. This is a common type of antenna. In suburban locations, you will seldom find that weak signals or really overpowering reflections or unwanted signals are serious problems. Also, the buildings on which you must mount antennas are usually of small to medium size, as mentioned earlier, being mostly dwelling houses, small to medium apartment buildings, or business buildings not more than six or eight floors high. These facts make antenna placement and orientation a good deal simpler than it is likely to be in downtown locations.

In addition, improvements in receivers, antennas, and the various materials and methods used in providing television reception are all helping to make installations in average locations easier and less time-consuming. For these and other reasons, it is quite likely that in many of the relatively good reception areas, one-man installation crews will be used in the reasonably near future. A good deal of the instruction in installation methods given in this Lesson is written from the standpoint of two-man installation crews, but this need not worry you, even if you suddenly find yourself a one-man crew! The information that is given here is still valid, whether one man or two men are working on the installation job. Naturally the receiver and antenna won't know the difference.

Choosing the Type of Mount.—Usually, the problem reduces to choosing the spot on the roof or side of the building that is acceptable to the owner or tenant of the property, and is also mechanically and electrically practicable. In a good many cases, a chimney mount will be acceptable on all of these counts, particularly since the development and distribution of a more effective chimney mounting bracket. On dwelling houses particularly, you should consider this mounting method early, as it may save you quite a bit of drill work. However, the chimney mount isn't a cure-all, so use your common sense when you're looking it over, the same as you would in picking out a wife......for some other guy, of course.

This means to make sure the chimney is reasonably sound and secure, not ready to belch bricks at the first tap of a tool, or likely to be crushed together by pressure of the mounting strap and brackets. You can check its condition by looking for soft, loose or missing mortar, loose, cracked and softened bricks, leaning out of plumb, etc. If your inspection shows nothing seriously wrong, try tapping fairly vigorously with a hammer on any bricks that look loose, and get an idea of the general condition by *the sound and feel*. All this takes only a minute but may save you and your company a lot of embarrassment later. Let's suppose now your tests show the chimney is okay to support the antenna. It might be a good idea to check with the owner before you actually get this far, if he is available, but it's unlikely that he will object to your choice if he has not already expressed some preference when you were introducing yourself.

Can You Work on the Roof?—Supposing you find the chimney suitable, the next thing to decide is whether you can work from the roof itself, or if you must use only the ladder. Standing or sitting on the roof itself is usually a good deal easier and faster, but this will depend somewhat on the type of roof, and its condition. Quite likely you'll be able to get an idea of these factors in your first inspection of the chimney and surrounding rooftop. If the roof shows evidence of being in really bad shape, so there is danger of damaging it while you're working, better report the matter to the customer right away. It's a good idea to check with him as to whether the roof is already known to be leaking, too, as it's quite possible that a leak discovered after you have left will be laid to you, even though it existed before you arrived on the scene. If the roof looks really bad, better work from the ladder if you can, even if it takes a bit longer. But be sure you have explained the matter to the customer, otherwise he may still attribute any leaks that show up to you, thinking you did use the roof.

In most cases however, you'll find that roofs are okay to work from in suburban areas. Apartment and business building roofs are seldom permitted to get in really bad condition, although it's wise not to be careless with sharp tools, mast sections, or the heels of your shoes.

Preliminary Check of Reception.—If it's practicable for you to sit or stand on the roof, you can tackle the preliminary orientation by running a suitable length of twin lead from the antenna to the set, making sure you allow enough length so that you can make a good transmission line installation if the site turns out to be satisfactory. This point should be in your mind when you're connecting up for the trial. With your partner at the set, with a station tuned in, you can hold the antenna upright on a short mast section and point its axis in the general direction you know the transmitting station antennas to be. Naturally you should be able to communicate with him freely during this part of the maneuver, either by sound powered phones, or moderately raising your voice. Incidentally, it is not likely to increase your popularity, or inspire any very favorable response from the neighbors if you do a great deal of loud, indiscriminate shouting, or make any more clatter and racket than is necessary to do the job. One reason people live in the suburbs is to get away from city noise, so don't bring them any more of it than you can help.

When your partner has a suitable station tuned in (a good team will have this point covered by the time the man on the roof is ready) start swinging the antenna, turning it in one direction or the other, not too fast, so you won't overrun the point of maximum signal before he can let you know you've hit it. It usually requires crossing back and forth over the nose of the lobe a couple of times before you can spot it accurately, since it is not particularly sharp. When you set on the proper orientation for the station you're using for the check, hold the antenna steady and have your partner check reception on each of the other stations rapidly. Quite often, in suburban locations, you'll find that you're already in business, with a satisfactory signal on each active channel, in which case you can begin planning the final installation. However, let's suppose you find one or two stations a bit weak. Probably the best move here is to have your partner make dead sure of accurate tuning, and then carefully reorient the antenna for maximum signal on the weakest station. With this done, make a new check on all the others. Often you'll find that this does the trick satisfactorily.

But let's go on, and consider that you still need more signal on the two weaker channels. Now you can see what a different placement of the antenna will do, and usually the best direction in which to move it is. . . . . . straight up. Quite often the signal strength shows rather sharp increases with just a few feet change in the antenna height, so better get a longer section of mast and hoist the whole contraption up a bit. When you've done this, try the orientation routine again, on the weakest stations, of course. If you're working in a normal suburban location, this should just about settle the matter. But if it doesn't, you still have several shots in the locker. Now is the time to take a look at the rest of the roof, or perhaps the roof of any other building under the control of the same owner or customer.

Look for Obstructions.—Also, take a good look along the direction in which the antenna points when oriented for maximum signal. You may find a big gas holder tank, a tall apartment or factory building, or some similar obstruction. The idea is to find a spot that will permit raising the antenna still higher, or give you a more direct look at the distant transmitting antennas past the obstructing object, if there is one. Also, now is the time to look around and see whether or not there is anything quite near to the antenna which could be causing some of the trouble, such as perhaps an overhead power line, the wall of an adjacent building, etc.

If there is no other spot on the roof that looks feasible, better get another section of mast and make a quick check of the effect of getting the antenna up still higher at the site where you are. If there are a couple of other possible places, warn your partner below, and move over to one of them. Go through the orientation procedure again, and have him carefully compare the best signal on the weak stations with the result you got at the former site. It's a good idea to proceed in this way at at least two places on the roof before you decide that a taller mast is going to be necessary, as a mast taller than 12 feet will require guying, which eats up more time and material. Don't forget the possible benefits of *small* changes of antenna height while you're working, either.

When to Change Antennas.—Of course, if none of the expedients mentioned so far works, you will either have to put up a taller mast, or try an antenna with more gain. The choice of which tactic to use will depend on the results you have gotten so far, and your estimate of conditions. For instance, if a small increase in antenna height showed a definite increase in signal strength, perhaps almost up to a satisfactory level, the twelve foot mast will probably do the trick. On the other hand, if the first jump in antenna height did not produce much improvement, you may be better off to change antenna types. And here another factor enters the problem. If the weak station or stations are in the high band, addition of the high frequency folded dipole and reflector may do the trick. If you are using one of the dipole and reflector combinations, addition of the wings and high frequency reflector may be the answer. In either case, try the experiment and see what happens. If, however, a low band station is definitely weak, you may have to turn to a stacked pair of antennas of the type you are using. This is quite unlikely in most true suburban locations, though, and you should try the other possibilities mentioned here before you resort to the stacked array. Usually, the combination of testing different sites and orientations will result in a satisfactory signal from all the active stations, particularly when using the hi-lo combination antennas such as the dipole and reflector with high frequency wings and reflector, or the later conical type antenna.

Placing the Antenna for Interference Reduction.—Of course, in case you have little trouble with signal strength, but do find there's quite a bit of noise or interference, you'll have to orient and place the antenna so as to keep all the desired signals as strong as possible, while reducing the unwanted signals by getting them at least partially into one of the nulls of the antenna pattern. You'll often find that placing the antenna well to the rear of the building will help in eliminating ignition noise from the street. Also, in elevator apartments, keeping the antenna and transmission line fairly well away from the elevator house will often reduce noise from this source. In other types of buildings, noise from other sources may crop up, and you will just have to try different spots on the roof to get a satisfactory result. Such considerations apply mostly to apartment and business buildings having flat roofs and parapets, of course. The number of places you can mount the antenna on a dwelling house roof will usually be a good deal more limited, of course.

Keep Installation Materials in Mind.—Your study of Lessons 7 and 8 has made you familiar with the tools and materials with which you do the actual installation, and of course you have these various components in mind while you're deciding which spot you will use for the antenna. The idea is to keep down the use of material and labor time to the minimum that will produce a safe, satisfactory installation, and you must weigh these factors in your mind when you're choosing the site. If, for instance, there are two good spots for the antenna, both of which provide good results, but one requires use of a specially long bracket to bring the mast out clear of the eaves of the house, while the other needs only a chimney strap, the chimney mount is the one to use. These are points you'll have to learn to evaluate yourself, however, as an entire book could be filled with different specific examples.

Before leaving this matter of placement and orientation, we may as well summarize the basic principles involved. *The idea is to provide satisfactory reception with the minimum expenditure of materials and labor time, with due regard to customer preferences, safety, and long time dependability of the installation.* Where internal, indoor, or window antennas will serve, and the customer approves, these are the ones to use, but when there is reasonable doubt about their satisfactory performance, or definite resistance from the customer, it's best to get going on the outdoor antenna. When unwanted signals are a problem, the dipole and reflector types are more effective in reducing the interfering signal when it comes from a somewhat different direction than the desired signal – providing it is getting in through the antenna, and not being picked up by the transmission line. In case of weak signal difficulties, increasing the antenna height, changing the mounting spot, better orientation, or a higher gain antenna may be the answer.

INSTALLING THE ANTENNA

9–5. In case the indoor or internal antenna proves satisfactory during your preliminary placement and orientation checks, the installation problem is obviously practically solved, and you can begin thinking about cleaning up and heading for the next job. You should, however, be sure that you've called the customer's attention to the orientation of the antenna, and emphasized its importance, so he can get it back in the same position after housecleaning, etc. Also, your connections to the antenna, the length of the piece of twin lead, and the connections to the set should be carefully made, so they will stay good.

Placing a Window Antenna.–If the installation has wound up with choice of window antenna, the placement is more or less determined for you by the location of whatever windows are available. In general the placement of this type antenna is done about the same as for the indoor unit–by trial and error. However, when you've settled on the best window, make sure you secure the antenna to the frame or sill firmly, and in as "clean" a way as possible, so it will offer a minimum of obstruction to window opening, screens, etc.

Running the Transmission Line.–The transmission line run will probably go best along the top of the baseboard around to the set, although occasionally it can be run up to a moulding, around, and down to the receiver. Usually this is less acceptable to the customer. In general, the use of regular fiber headed tacks carefully spaced will hold the line in place, but you may find spots where plastic tape is required.

In certain types of modern apartments you may find that the baseboard is metal. In this case, *you must keep* the transmission line away from it at least three or four inches, and preferably further. It isn't wise to try running twin lead across a room under a rug, as the polyethylene is not capable of withstanding much wear and abrasion. Your own ingenuity and experience will help you here, as no one can anticipate all the problems that will come up, even in such a simple installation. The main points to remember are not to run the line close to conductors for any appreciable distances, say more than an inch or two, and to fasten it in such a position that it does not interfere with normal use of the room and its furnishings.

Mounting the Antenna Mast.–Where outdoor antennas are required, one of the first points to be settled after the site and orientation have been decided upon is the method of mounting the mast. If the results of placement and orientation tests permit use of the chimney strap, and the chimney is satisfactory from other standpoints, well and good. You already know what these points are. You can go ahead and secure the strap to the chimney and put the mast and antenna in place, bearing in mind that you must make a final orientation *after* the transmission line run has been completed. A typical installation, using this method, is shown in Fig. 9-13.

If the chimney mount is not feasible, the use of the ridge bracket may be the answer on a peaked dwelling house roof. This mount requires the use of guys, run from a mast ring to suitable anchorages on the roof. It will require your best and most careful efforts

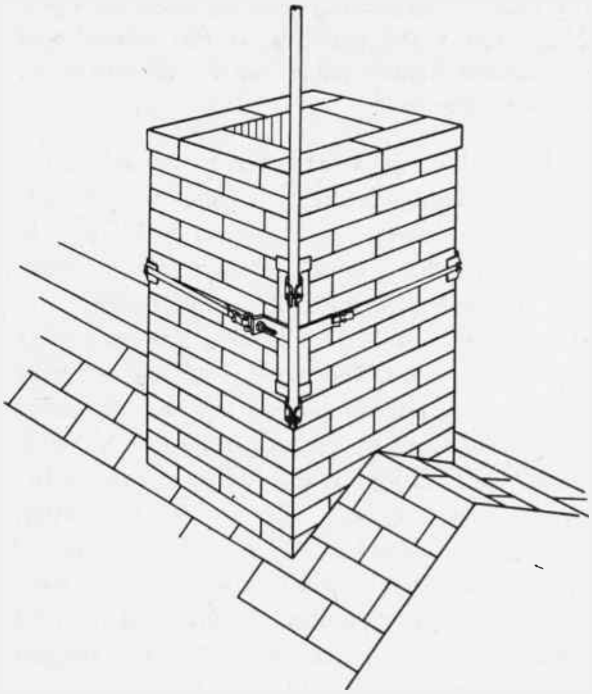

Fig. 9–13

to handle this task efficiently in most cases, so don't take chances of an accident by slighting the job in an effort to hurry. Choose your guy wire anchorages with care, paying particular attention to the matter of avoiding making the roof leak. Usually you can run the guys to the edge of the roof on a dwelling house, or to a gable window frame, or some other point which does not require making a hole in the actual roof surface. If for any reason this is not possible, test very carefully before you drill for the lag screw, to make *sure* you are getting it into a solid piece of timber, and not merely into a couple of shingles.

Also, you must set the lag screw at such an angle that the guy does not exert a bending leverage on it which would tend to open up a hole beside it in time. And of course, you should use tar or some other waterproofing compound liberally around the shaft of the lag screw and the hole itself, to make sure a leak doesn't develop later.

On flat apartment house and business building roofs, you can use the flat board mount, if the antenna cannot be placed on a parapet or some similar place where guys will not be required. Here, however, some additional complications crop up, aside from the mechanical and electrical ones. On roofs to which people have access, the lowest element is often required to be at least 7 feet above the roof to prevent obstruction, and the rigging of guys may be well-nigh impossible without violating this requirement. Local building codes will control this point. It's usually best either to put the antenna on the parapet or a chimney, or to try to get it near a corner of the roof, where the guy wires will be a minimum nuisance. On such roofs, the anchorage of guys is also likely to be a problem, as they are seldom of materials which will take lag screws. Sometimes you can run the guys to points on two parapets, or to a chimney or hand rail, but these things will vary with the individual building. It is not usually a good idea to locate the antenna on or near the elevator shaft house, as elevators are a common source of bad electrical noise.

If the antenna can be mounted on a parapet or wall, the regular wall bracket and lead anchor bolts are usually the best deal. This eliminates the necessity of guying, and usually gets the antenna clear of the roof itself, so there is no danger of somebody losing an eye on it some

Fig. 9–14

summer night while enjoying a rooftop breeze. Also, on buildings of this sort, it is usually much easier to run the transmission line and grounding wire when the antenna is not at the center of the roof, two points you shouldn't overlook. There are, of course, circumstances where you can't avoid locating the antenna in the middle of the roof area. Here's an example of such an installation which you can study:

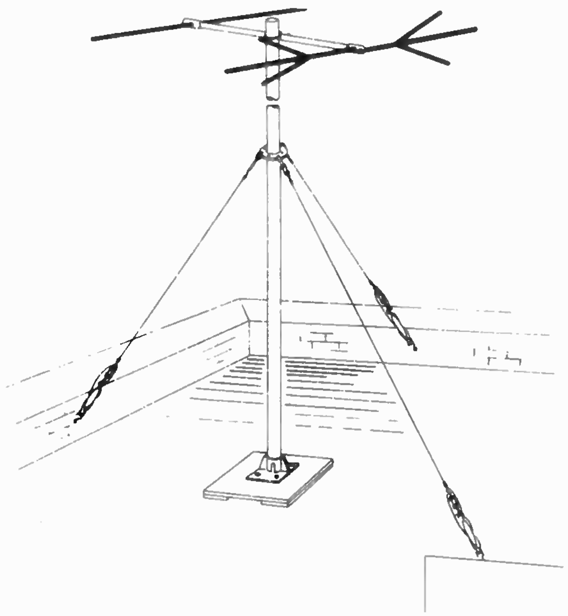

Fig. 9—15

You can see by comparing this installation with that in Fig. 9-14, how much the parapet mount simplifies things.

Antenna Grounding.— We come now to grounding of the antenna installation, in order to comply with the Underwriters' requirements, and local building codes. In many localities, these rules and regulations were established many years ago, before television was even thought of. For this reason, you can expect some changes in the requirements as time goes on, and also some differences in different localities. At present, grounding of masts is required, either to a ground stake, or to some well grounded part of the building's frame or structure, such as cold water pipes, etc. In most parts of the country, it is *not* permissible to ground to the vent pipes of the plumbing system, under present regulations, as these pipes are often partially insulated by the caulking at the joints. Local regulations should guide you for the final word on this question.

It is also not permissible to ground to the copper flashing often found around the inner surface of the parapet on business buildings. In most cases, this flashing is not itself grounded, and will therefore not help you to comply with the requirements. Admittedly, the grounding problem is often a knotty one, and you will have to use your imagination and ingenuity to solve it, but one thing is certain. It must be handled; otherwise the question of liability in case of fire immediately arises. This matter of liability, remember, involves mostly compliance with the law. In actual practice, it is doubtful if even the very best possible ground will prevent damage if lightning actually strikes the antenna installation. But for the present, the rules as laid down must be followed.

Use the prescribed aluminum grounding wire, and make sure it is really firmly connected, both at the mast end and to the point you have chosen as the ground. Several methods of testing for whether a particular part of the building is actually grounded or not are in use in the field. None of them is really satisfactory from a safety angle, for they all involve the use of the 110-120 volt power source. This is ample voltage to kill a man under favorable (or rather, *un*favorable) circumstances, not to mention the likelihood of the shock causing him to fall off a ladder, if he happens to be on one. The safest procedure is to know what parts of a building constitute satisfactory grounds and which don't. Cold water pipes, steel framework of buildings, and fire escapes of steel framed buildings, are probably grounded. Cold water pipes are the best bet. Waste lines (soil lines or sewer pipes) are not good bets, as the metal pipe used in the house often connects directly to ceramic tile pipes in the ground. The same is true of metal leaders running from the roof gutters to an underground drain. Fire escapes or steel girders supported only by masonry are *not* satisfactory grounds. Gas pipes and oil fill lines are ruled out because of the fire hazard involved. Metal roof flashing, gutters and window frames are almost never grounded.

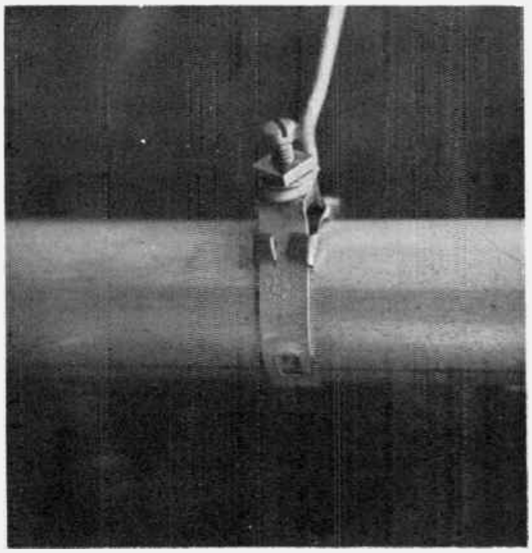

Fig. 9–16

In grounding on dwelling houses, you'll not usually find it too tough, as you can often drive a ground rod near the wall of the house, when nothing else will serve. However, if there is a cold water pipe handy, or some other part of the structure that will serve, it may actually provide better protection, and you should use it. Ground rods comply with the minimum requirement of the law, but your job is not only to do that, but to do better if you can, without going to an unreasonable amount of extra work. After all, you want to *keep* customers, too.

Use of Tools.—We haven't said much here about the actual mechanics of driving rawl drills, putting the antenna together, etc., and for some good reasons. You've had two lessons already dealing with materials and tools, and how to use them. Also, if you're working right along with more experienced men every day, they can help you catch the knack of such things much better than you can get it from a written lesson, no matter how carefully it is done. You *should* be getting from this the principles that govern your decisions about placement and orientation, where and how to install the antenna, and the various other details of the job. Naturally, your skill and craftsmanship in handling the tools and materials will have a strong bearing on your success in your work, and your advancement, so bear down in developing them. But for the purposes of this lesson, we assume you're reasonably competent in this department.

INSTALLING THE TRANSMISSION LINE

9–6. Fortunately, the transmission line run is seldom a really serious headache in suburban locations, so we will be able to cover it rather briefly. In general, the line should be run in a fairly direct way to the point where you plan to enter the building.

Use of Stand-offs.—The line should be properly anchored with stand-offs, spaced usually not closer than four, or more than ten feet apart; and it is good practice to put three or four twists in the twin lead between stand-offs, always in the same direction. This has the effect of improving the electrical balance of the two sides of the line

Fig. 9–17

to ground, and aids in reducing unwanted signal pickup on the line itself. The line should be held away from conductors at least a line width or two at crossing points, and should never be laid along near such a thing as a copper rain gutter if you can avoid it, even if it means using quite a bit more line. Line is fairly inexpensive, but signal energy isn't.

Make *sure* your connections at the antenna are good and solid, and that the line is particularly well supported by stand-offs in this region, as it is usually more exposed to wind and vibration here than lower down. Also, it's usually pretty darn conspicuous, and a loose end dangling may result in a service call, even if it's only a piece of string or tape. At points where the line must cross edges of structures that might wear through the insulation under action of the wind, use the loom provided for the purpose, and make sure it is carefully taped in place at both top and bottom. If water enters the loom, it may very well cause such loss of signals that a service call will result, so take special pains that the *top* taping is particularly secure and watertight.

Regular or Heavy Duty Line?–Incidentally, your choice between regular and heavy duty twin lead must be based partly on the service conditions you find at the location. In most suburban locations, the regular line will be satisfactory, but if there is danger of more than ordinary wind and weather wear on the line, better use the heavy duty stuff. In some localities there are special conditions which must be met, but here again you can have all the information ready in advance.

Oceanside Precaution.–One special condition is worth mentioning here, however. In parts of the country near the ocean, some extra precautions are often needed. The most common one is the use of vinylite loom covering the entire length of the twin lead transmission line, securely taped watertight with plastic tape at both upper and lower ends. In such regions, salt from windblown spray has a nasty habit of depositing on the line, whereupon the losses of the line go up, the amount of the signal reaching the receiver goes down, and the customer goes to the phone.....and calls for you.

Putting the loom over the twin lead holds the deposited salt so far from the stronger part of the electric field around the line that the losses due to this effect are not serious, unless the water can get *inside* the vinylite loom somewhere. Don't let this happen on any line you put in. Tape the end of the loom.

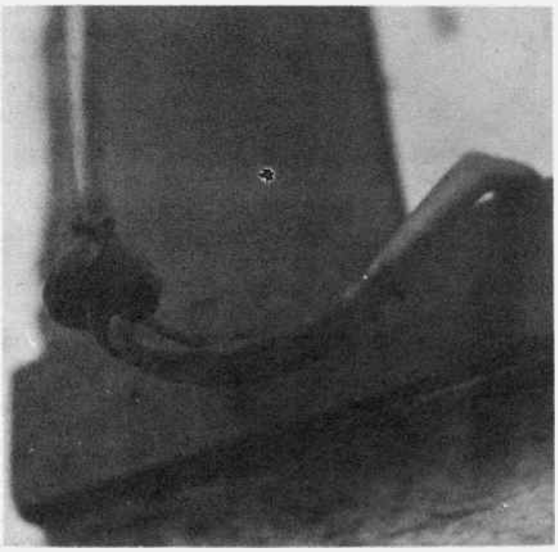

Fig. 9–18

The use of the new type of tubular transmission line is also helpful in avoiding signal loss due to water on the line, or salt deposits. In this line, the water or salt on the outside of the polyethylene dielectric material is held so far out of the really strong part of the electric field between the wires that it causes relatively small losses of signal.

Horizontal Runs.–Some other points about running line are also worth mentioning. If you must carry the line horizontally for a considerable distance, it's best to make the vertical part of the run first if you can, at least down to perhaps eight feet above the ground. At this level you have to begin thinking of the hazards from children and pets, and it's good practice to locate the line so it will be at least seven feet off the ground. The reason for keeping the horizontal parts low down is to minimize the amount of all sorts of signals picked up by the line itself, as this usually adds to the orienting difficulties.

Entering the Building.—Getting the line into the building is one point you must settle next, and there are a couple of other factors that have a bearing on it, as well as the architecture of the building. You should be keeping the lightning arrestor in mind, and also the location of the set inside the building. Fortunately, you'll have some of this worked out in your mind merely from your experience during the preliminary placement and orientation.

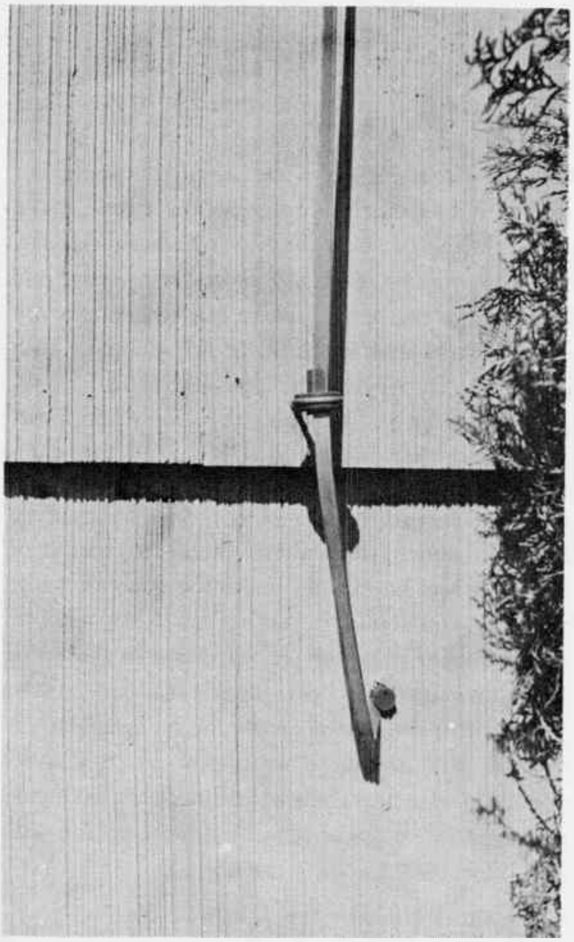

Fig. 9–19

In dwelling houses that have a basement, it's often a good move to take the line in through a cellar window frame, using the wood drill and rubber plugs around the line to keep the hole water tight, as shown in Fig. 9-19. This usually lets you mount the lightning arrestor on a cold water pipe in the basement, which is at once out of the rain and on a good ground.

The Inside Run.—Then you can take the line across the basement ceiling, often on the floor joists, held with fiber headed tacks, and up through a hole drilled in an inconspicuous spot near the wall just behind the receiver, *after* you know definitely just where it is going to be kept. Naturally, you tap carefully with a hammer to locate a clear spot for the hole, so you don't have to make more than one; or else you make a small pilot hole with a suitable drill, from the top, of course. If you're working with a partner, teamwork here between a man at the set and his teammate in the basement makes this go more smoothly.

With the line in place and all secured and snug in the basement, you can apply plastic wood smoothly in the hole around the line, and there will hardly be any noticeable blemish remaining. Then you can prune the line to a length that permits reasonable movement of the television set for cleaning under it, or changing its location a bit in one direction or another, and connect it properly to the input terminals.

Upstairs Installations.—If the set is not located on the ground floor of course, or if the house has no basement, you'll more likely have to bring it in at a window sill. Usually you can choose a spot that will be inconspicuous, where the line will not interfere with operation of the window, screens, etc., and will not be subject to abrasion. In choosing such a spot for the entrance hole, don't neglect the possibility of bringing the line in at the *top* of the window. Quite often it can be brought in through a hole in the window frame which is covered by the curtains or drapes, so that the Lady Of The House will not be annoyed every time she looks over that way. This also keeps the line off the ledge, where such things as flower pots and similar bric-a-brac may damage it over a period of time.

This entry method does impose more of a problem in fitting the lightning arrestor, how-

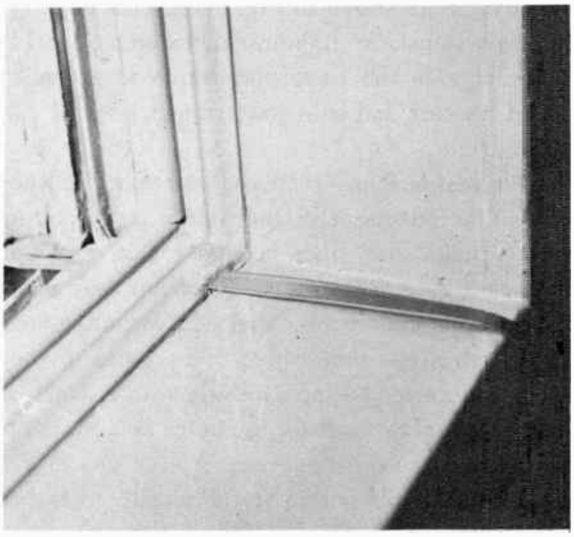

Fig. 9—20

Fig. 9—21

ever. At the present time, there is no arrestor that is completely waterproof, hence it is advisable to get it inside, even at some inconvenience in making the installation. If you can get it mounted on a water pipe, warm air duct, or even a radiator, this will usually serve, but this is not always easy. If you are in an apartment building, there may be a metal baseboard which is grounded, and this is worth checking on. Failing that, it is even possible to make a ground connection to the *outside* metal sheath of electrical conduit, as this is invariably grounded, but the use of water or air pipes is regarded as better practice.

In apartment buildings, it will often be necessary to bring the line in through French windows or doors. These are likely to be of the steel frame type, with the individual panes of glass fastened in with putty. In this case, it is often possible to cut out one small corner of a glass pane in the stationary part of the window or door, and bring the line through the hole, suitably protected with tape or a short piece of loom. A glass cutter can be used to start the crack across the corner of the pane, and a small screwdriver can be used to dig away the putty. You will have to be very careful to avoid cracking the whole pane, as this will involve a replacement, and of course, the transmission line *still* must come in through the new pane! Once in a great while you'll find that it is possible to work the line in around the edge of the glass after picking the putty away, without the necessity of cutting off a corner of the pane, but this is not often the case. In any event, make sure the line is securely held by a stand-off outside the window, so that movement by wind and weather can't wear the line in two where it bears on the glass and sash. The drip loop is also important, to prevent the possibility of a leak, and of course the tape on the line should fill the hole in the glass snugly.

Don't forget to use loom if you must bring the line over a sill where there is chance of abrasion, and be sure to leave the spot as water tight as you found it, at least. This usually means rubber plugs or plastic wood in the entry hole, and use of a "drip loop" in some cases. Making this is just a matter of leading the incoming line down in a loop a little (maybe two or three inches) below the hole and then bending up to it, so water running down the line will drip off before reaching the hole.

In some apartment and business buildings, you may be forced to go such a long way around to bring the line down an outside wall to the apartment, that the question of bringing it down a ventilation shaft may come up. By all means look into the possibility, particularly if there are antennas and lead-in already erected, but be cautious. Such shafts often act like wave guides carrying every darn electrical noise in the building along themselves, and if your line runs down several floors in such a shaft, you may find that you've mysteriously acquired a crop of noise and interference that didn't show up when you were placing and orienting the antenna.

Final orientation and Adjustment.—When you've got the line in as it will be permanently, be *sure* you recheck the performance on all channels carefully. Very often, making the permanent installation of the line changes electrical conditions along it enough to make a noticeable change in the quality of the reception. If this shows up, you must hop back up to the antenna and touch up the orientation for best results again. If you're so unlucky as to find that now you can't get a satisfactory picture on all channels, make a careful check along the whole length of the line to make sure something hasn't cut or grounded it somewhere. Usually this will show up as a weakening of *all* signals, but you can't be certain in advance.

If the trouble is noise or interfering signals that were not present before, make a quick check by disconnecting the antenna from the line. If this removes the interference along with the noise, the trouble has started since you began work on the line run, and perhaps a reorientation will minimize it. If disconnecting the antenna does *not* stop it, there's a chance you'll have to relocate the line. Go along its length and see if you can't find the offending noise source and figure out a way to avoid it. Of course the trouble may be pretty obscure, and you may have to take another temporary antenna and length of twin lead and hunt for a better site and orientation on the roof, but if your original job was done well, you'll already know whether there's much hope of making an improvement that way.

If all goes well on the final check, remember that, when one station is a bit weak, it's best to favor it in the orientation, and let the stronger ones come in as they will. Usually in suburban locations, all stations bear about in the same direction, but it's worth while to remember that when this is not the case, you can do quite a bit to equalize station signal strengths by orienting the antenna carefully. With the antenna at its final orientation, be sure you set up the clamps firmly, check the guys for proper tension (not like bowstrings, not like hammocks), and generally see that everything is shipshape on the roof, all scraps removed, holes tarred, tools picked up, etc.

DEMONSTRATION, CLEANUP AND DEPARTURE

9-7. Back at the set you are now prepared to get the customer's final approval. Quite often he'll have been an interested spectator at your tests, so this part of the proceedings need not take very long. You have the business of teaching him to operate the set, of course, but you should also show him the picture on each active channel, and explain any peculiarities of reception that may show up. A persistent ghost which could not be eliminated, for instance, should be pointed out and explained, as sometimes it may result in a service call that would not otherwise have been made. A little thought here will usually leave a much more pleased and satisfied customer than will be the case if you try to gloss over such a thing, particularly if you can explain the matter, and mention that you have installed and adjusted the antenna so as to bring the defect to a bare minimum.

Fig. 9—22

Getting Approval.—You need not get any formal oath of acceptance from the customer, but you *should* make it clear to him that you are showing him the picture on each channel for a definite purpose, so he will know just what he is getting. You can even explain that this is standard practice, so he won't be puzzled or worried by any small defects on this or that channel, but in any case keep it fairly short and businesslike. You should of course make sure that he can operate the set, as we said before, but this is covered elsewhere.

Cleaning Up.—This too is usually a rather short piece of business, but it should be thorough and careful. You ought to pick up every scrap you have left, put them in the appropriate trash receptacle, gather all tools and excess materials, and above all, put all furniture and household fittings right back the way you found 'em, and do it carefully. That common-looking old sideboard may be a priceless family heirloom for all you know, so don't bounce it around like a broken egg crate.

Incidentally, its a good idea to have one man cleaning up and stowing tools while the other is handling the check of reception and teaching the customer to operate the set. This cuts your time, and leaves the man with the customer free from distractions for the fairly diplomatic job he has to do.

Last of all, you can check any windows and doors you have used to see that you've put them back as you found them, and you're all set. A last businesslike "goodbye" to the customer, and you pull away for the next job, not forgetting to drive away as carefully as you pulled up. And right here, maybe a last word of caution may be in order. It has nothing to do with antennas, but may save you some awful headaches. Be *sure* that no children or pets have parked themselves under the truck or near it while you were working. This can easily happen when your mind is on orientation and standoffs, and one such accident can cause you more trouble than ten antennas, even if they have built-in ghosts.

◆

NOTES

NOTES

TELEVISION SERVICING COURSE

PREPARED BY

RCA INSTITUTES, INC.

A SERVICE OF RADIO CORPORATION OF AMERICA

HOME STUDY DEPARTMENT

350 West 4th St., New York 14, N. Y.

LESSON TEN

ANTENNA INSTALLATION

(PART 2 - MIDTOWN LOCATIONS)

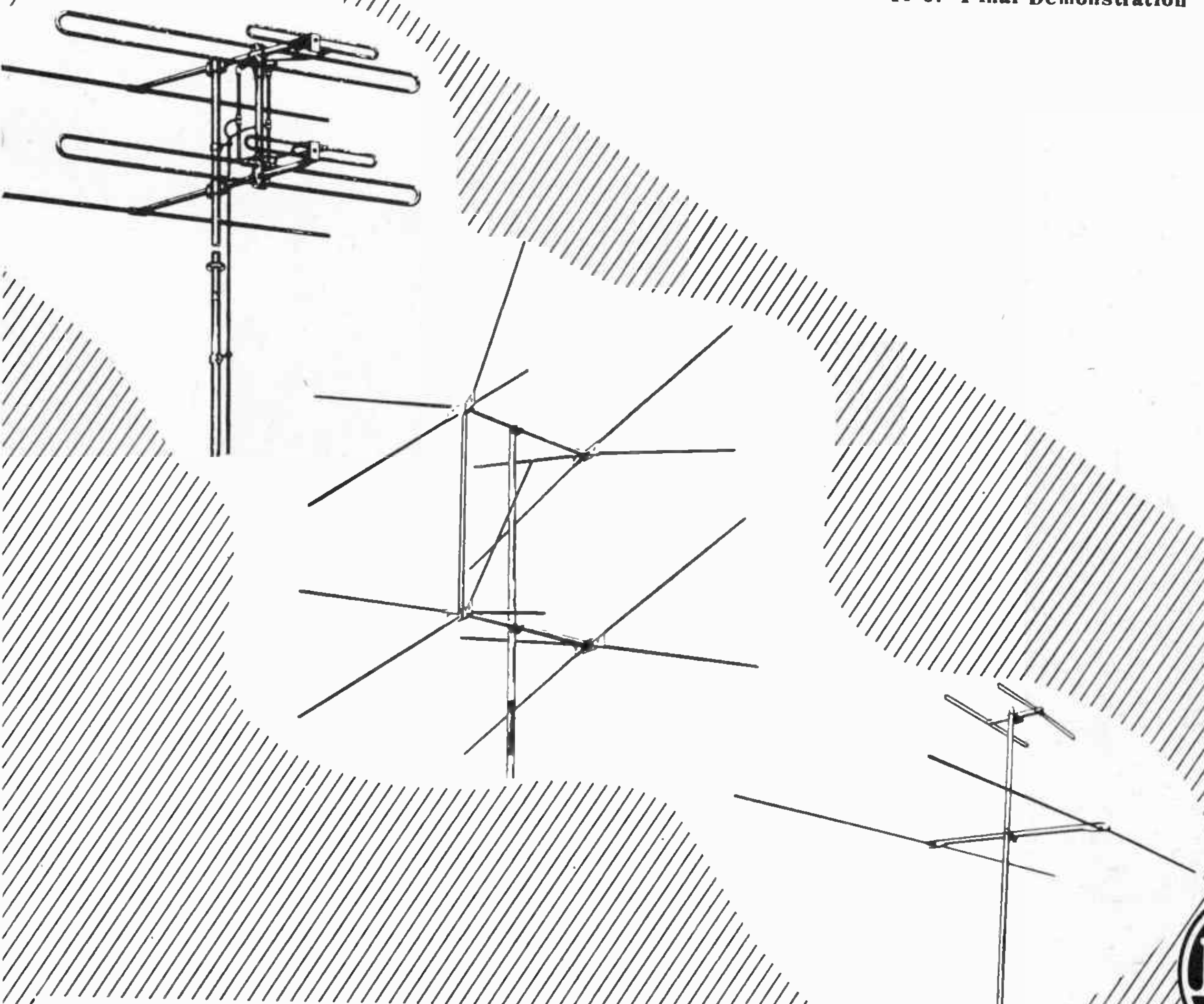

Lesson 10

GENERAL REQUIREMENTS

10-1. The five numbered requirements you studied in Sec. 9-1 of Lesson 9 apply just as well in the midtown areas of cities as anywhere else. But the problems you must solve to satisfy those requirements are likely to be much tougher than the ones you find in suburban installations, for reasons we'll go into presently. That's why it's wise to devote a separate Lesson to them, instead of lumping *all* antenna work together. Of course, it's well to keep in mind that we can't make our classification of types of installation rigid. By "midtown" we don't necessarily mean every installation made in the down-town section of a large city.

"Midtown" Conditions. – What we really have in mind are *installations where a certain set of conditions is generally found,* so let's take a good look at these conditions. Here they are:

1. Signals on all active channels will range from strong to very strong, in some cases strong enough to overdrive the receiver input.
2. The transmitting antennas are likely to be in several quite different directions as seen from the receiving antenna site.
3. Noise and interference are likely to be much stronger, particularly during business hours.
4. Ghosts are likely to be very common, quite strong, and often there will be several on a single station.
5. Buildings in the area are likely to be mostly steel frame office, business, and apartment or hotel structures, often big enough to cause bad shadowing in certain directions on certain stations, as well

Fig. 10-1

as the reflections that produce the ghosts mentioned in point 4 above.

Due to the facts mentioned in discussing the location of television transmitting antennas, in Lesson 9, there's not much likelihood that this situation will change. It *is* necessary to get the transmitting antennas up high, and mounting them atop tall downtown office buildings will probably remain one of the best ways of solving this problem for some time to come.

It is this single factor that is most responsible for the conditions that define our "midtown" location. Now that we have the five conditions nailed down, let's examine each of them in a little more detail, since they have a strong effect on the problems to be solved in midtown installations.

Signal Strength. – In midtown locations, signals are almost always far stronger than the minimum necessary to produce a good picture with even a simple dipole outdoor antenna. However, this is not an unmixed blessing. Being so near the transmitting antennas, it is quite possible that the signal from the nearest one may be strong enough to *overdrive* (often called over*load*) the receiver r-f amplifier stage, or some later stage in the receiver. This overpowering signal strength causes severe picture distortion and other operating defects when the receiver is tuned to that channel. It may also show up in the background of several other channels because of an action known as *cross-modulation*, which will be covered later when we are looking into ways of dealing with such problems.

Even if the signals from all stations are below the level where distortion begins to appear, they can cause some other troubles such as "phantom" signals that tune in on channels where no signal should appear, or obscure interference patterns that cause smear, and are hard to diagnose correctly. Of course, the high signal levels have certain advantages, too. Often the signals inside the building walls will still be strong enough to provide good pictures on several stations, even with the increased electrical noise likely to be present. Also, the strong signals easily make up for the loss in long transmission lines of the sort that must often be used in such locations. In addition, when other conditions permit, it is frequently possible to get enough signal strength with a very simple antenna, but unfortunately the other conditions don't often cooperate so obligingly. That is one reason why you must learn to size up each new installation job quickly as an over-all problem by checking all of the factors listed and balancing them against each other.

Directions of Transmitting Antennas. – You'll remember from Lesson 9 that the transmitting antennas usually are all in the same general direction from a typical suburban location. Unfortunately, this is very definitely *not* so in a typical midtown installation. Here you may easily find yourself right in the middle of the cluster of tall buildings that support the transmitting antennas, with perhaps one of them located 'way out on one side of town for good measure. This is one of the most complicating factors in these jobs, because of the fact that the customer naturally wants and expects good pictures on all channels, if he can possibly get them. To make this even tougher, a large percentage of midtown installations are of the "commercial" sort – in bars, restaurants, etc., where the customer has a particularly strong desire for good reception on all channels all 'round the clock, regardless of interference and noise conditions at various times of the day. As you already know, television antennas do not receive equally well from all directions, so when a single antenna is oriented to give good pictures on perhaps two or three stations, two or three others may be *so* weak that they are marred by noise and interference, or serious ghost trouble. The antenna directivity pattern will be very useful to you in solving such problems; several of these patterns are shown on Pages 23 – 25.

Noise and Interference. – The strength of electrical noise and interference voltages is likely to be much greater in midtown areas, and there will probably be many more sources of such trouble-making radiations. Fortunately, the strong signals help to overcome the noise and interference trouble, because within limits it is the *ratio* of television signal to interfering noise that is important, rather than the actual level of either. Thus if the signal is ten times as strong as the noise on a given channel, doubling the value of both, or cutting both in half probably won't make much difference in the picture, so long as we keep the relationship between them the same, and do not overdrive the receiver input.

The noise and interference in midtown office buildings is likely to be stronger inside the walls than outside, due to the shielding and containing effect of the steel frame, metal lath in the walls, and the numerous pipes, conduits and other electrical conductors. The latter of these branch and connect through the entire building, and often act to carry noise or interference to points in the building far removed from the source. Of course, this adds to your problems of getting rid of the effects of such things, so you'll have to keep it in mind when you hit nasty interference cases.

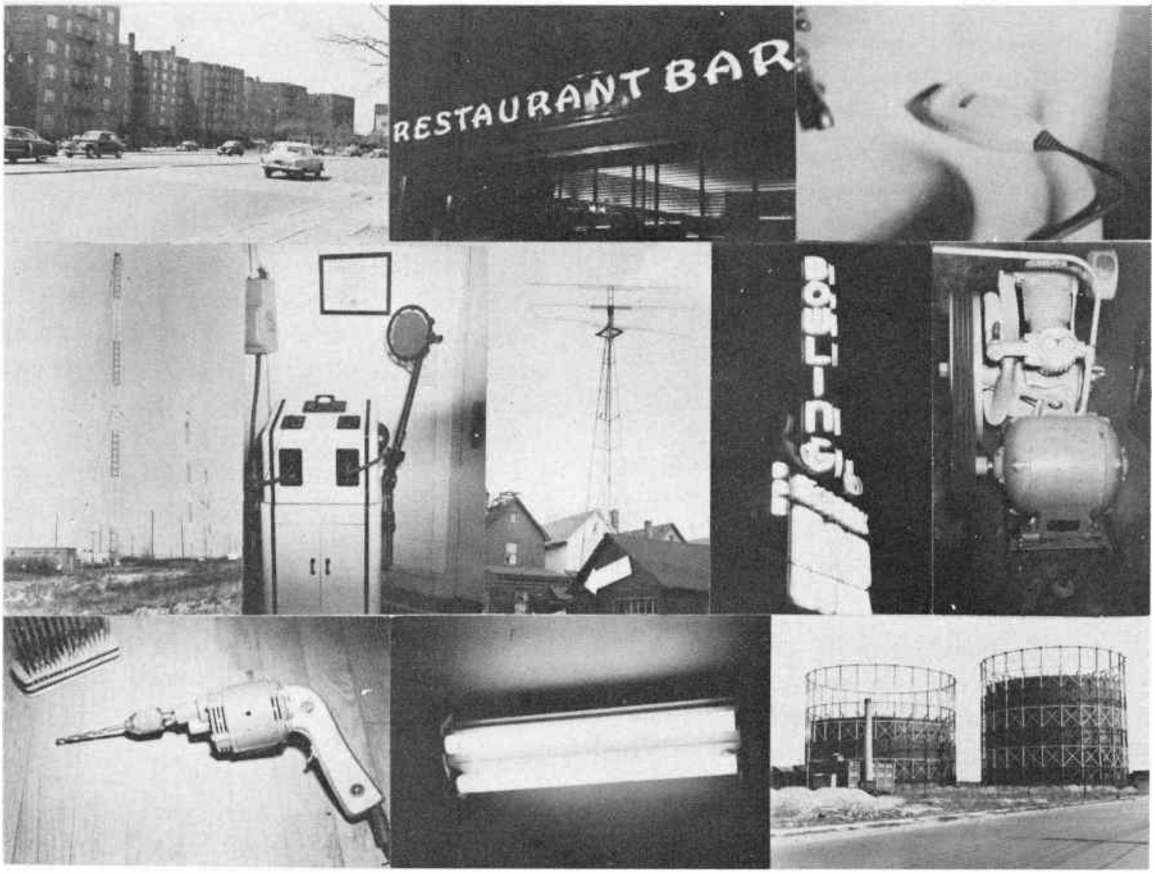

Fig. 10-2

The fact that all sorts of electrical devices are in use in office and business buildings during business hours often complicates things still further. This is particularly true because as yet there is no code within the electronic industries that sets a maximum value on the amount of electrical noise that even a new device in good order is permitted to radiate. And of course, when things like neon signs, drink mixers, oil burner motors, electric razors, fluorescent lights and pinball machines begin to get out of order, electrical hell breaks loose. This may sound discouraging, but it's better to be prepared for what you must face than to go in with your guard down.

Ghosts and Other Reflection Effects. – Of all the headaches that beset the sweating installation man in midtown areas, ghost images are probably the most common, and among the most difficult to tame. The combination of many tall structures to reflect, and plenty of signal to *be* reflected, results in a regular hash of radiation going in all sorts of odd directions. If we could see the waves, it might give an effect like a strong light shining in a room full of mirrors set up at all sorts of angles and distances. At any rate, it complicates the installation problem greatly, particularly in combination with the other conditions found in downtown areas.

Reflected signals also cause another effect that is not noticed so often, but which can occasionally cause trouble. This is cancellation of a desired or undesired signal at certain points in space where the reflected and direct signal happen to be equal in strength and 180 degrees out of phase. It shows up sometimes during placement and orientation, when the antenna is being moved around while the picture is studied for quality. Occasionally, as you move the antenna about, you'll find a spot where practically no signal is obtained from the desired station, or maybe (happy day!) even troublesome noise or interference seems to disappear.

Sometimes you'll find this cancellation effect useful, but it's tricky, and not too dependable, because with changing weather conditions or other things beyond your control, the effect may change drastically.

Another touchy point is the position of the line, particularly if it is the parallel wire line, While you are orienting, the line must be practically in its final position, or you're very likely to find that when it *is* fastened to the stand-offs, in the final position, reception is quite different than it was during orientation. This is because the parallel wire line itself picks up a considerable amount of signal energy, and this energy adds to or subtracts from the signal picked up by the antenna, in ways that are not predictable.

Also, the cancellation effect is unlikely to work on more than one channel at a time, or with a change of orientation. Lastly, the effect is usually pretty critical, particularly on the high channels. Moving the antenna a few feet, or in many cases even a few inches, will make a big difference in the quality of the picture, and this can cause trouble when there's much wind. Of course, the *opposite* effect also shows up just about as often, in which the direct and reflected waves add up in phase, producing a particularly strong signal when the antenna is at that particular point in space. The same criticisms apply as for the cancellation effect, when you're considering taking advantage of this condition.

Architecture of Buildings. – Many buildings in the midtown area of large cities are likely to be steel frame structures of considerable size and height, ranging from ten or twelve to maybe fifty or more floors. Even the hotels and apartment houses in midtown areas are usually pretty big and of fairly modern construction, with elevators, underground garages, and above all, lots of electrical conductors in their walls, floors, and ceilings. You've got to think of them this way, for these things will affect your work every day in dozens of ways. Most buildings of this sort are fairly well kept up for obvious reasons, and there will be a whole staff of people whose sole job is to maintain the building and perform the various services required by the tenants. The head man of this force is often called the building superintendent, and on your first visit to a particular building, you'll usually have to find out through his office which man in his organization is the one to answer your necessary questions and tell you what can and cannot be done on an installation job. This man is quite often the building engineer, and after you contact the customer, your next move will usually involve consulting him about the building rules about antennas, line runs, and similar matters. He usually knows the building thoroughly, and can be of immense help to you if you establish and maintain good, business-like relations with him. We'll cover this more thoroughly in the next section dealing with specific matters.

Fig. 10-3

Getting back to the general architectural features of midtown buildings, we find quite a few points to be remembered. Almost all will have quite an area of flat roof, with parapets surrounding it. These are often handy for mounting antennas.

All will have fire escapes, and these are often useful places from which to work when making your vertical transmission line run when you must go down many floors. Don't forget, however, that in almost all sections of the country it is illegal to fasten anything to a fire escape. This can get you into trouble with the Building Inspector. Older buildings may have big, overhanging cornices that make it somewhat difficult to run a line over the edge and down without leaving an unsightly loop hanging out to flap in the breeze. It's much better to find a different route for the line, if you can, in such cases.

You'll usually find elevator machinery enclosures on the roof, or maybe one floor below, and perhaps a water tank or a penthouse, or a ventilating fan housing at the top of an air shaft. Sometimes an elevator or air shaft may be useful for routing a transmission line, but as you'll learn later, there are good reasons for being cautious about them, too. Aside from technical considerations, such shafts are also subject to the local Building Codes, just like any other part of the building. Naturally, you must make sure that the Code in your locality permits running lines down shafts, before you make any such installations. You should have information on this and similar points.

Building Materials. – The materials used in the construction of midtown buildings are predominantly brick, stone, concrete, plaster, and steel. Naturally, you'll find that most of the holes you make for fastenings will be in such materials, although occasionally it will be possible to fasten into the wooden part of structures built on top of the roof proper. When you *can* fasten into wood, it often cuts the time you require for making holes, but you must be sure that the fastening is both strong and permanent. Don't forget, either, that you must leave it as watertight as you found it.

The material used to make the roof surface itself watertight is often heavily tarred paper,

Fig. 10-4

either plain or with a surface coating of fine crushed stone or something similar, to resist mechanical wear. In working on such roofs, the methods and precautions you learned in Lesson 8 must be kept firmly in mind. This advice of course applies to all questions of water tightness, as it is one of the points most likely to cause trouble.

Safety Sense. – It shouldn't be necessary to remind you that many midtown buildings are high, that climbing is dangerous, and that death is fairly permanent. Don't take any foolish chances to impress the people on the street, your working partner, or yourself. A good rule is, when there is any doubt in your mind, don't try it. There is usually an easier way anyhow, which you can find by using your head, or asking the building engineer; so don't make like a steeplejack run mad.

Density of Television Installations. – Midtown areas are likely to have far more television receivers within a given radius than is the case in any other area, simply because the density of *human* population is so great. If you don't think this can grow into a serious problem, get a load of this:

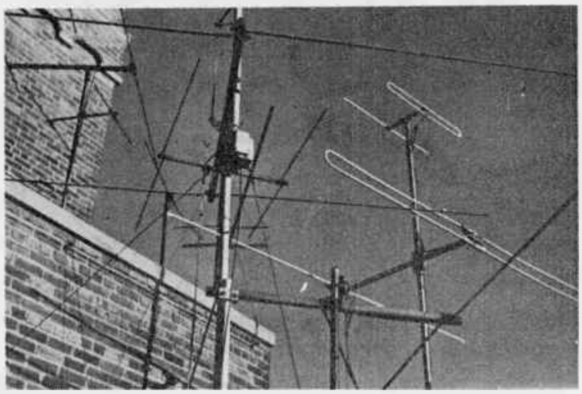

Fig. 10-5

There is just one way to describe this situation. It's a mess. Practically everything is wrong with it, and the only reason any of the customers in this large apartment building are getting satisfactory reception is because the signals on this roof are so strong that the transmission line alone may well pick up enough. Admittedly, this is a bad case, but it will give you an idea of what density of installations means, and what you must try to avoid if building regulations will permit. Unfortunately, landlords of many large apartment and office buildings still restrict sharply the area of the roof on which antennas can be mounted, or prohibit roof-top installations entirely. This adds another throb or two to your headache in midtown installation work, but until some solution to such situations is found, you will just have to make the best compromise you can between good installation practices and the conditions you find. Nobody can do any more than that.

Commercial Installations. – A much larger percentage of "commercial" type installations is likely to occur in midtown areas than in either suburban or fringe areas. This is because many television sets are installed in bars, hotel lounges, restaurants, office waiting rooms, and similar places, for business reasons.

In such installations, the customer usually wants to know in advance whether or not the reception he can get will justify the considerable expense entailed. Often he authorizes a survey to be made, for which there may be a service charge that can later be deducted from the installation cost, if he decides to have the television set put in. You will undoubtedly handle quite a few of these surveys when you get into midtown work, and right here it's a good idea to get certain points very well fixed in your mind. Be on your toes in making such surveys, and do your level best to give the customer an accurate, unbiased analysis of the actual reception situation. *Don't* try to be persuasive, and don't be either pessimistic or optimistic. *He* is the guy who's footing a bill than can be very sizeable, and if he later has cause to regret a choice he feels you persuaded him to make, you can be sure that you've made an enemy for your company, and maybe trouble for yourself.

These commercial installations are often among the toughest to make, both because the customer needs and expects even better and more dependable performance and service than he demands in his home, and because the locations are often regular nests of noise and interference, or require extremely long transmission line runs.

For instance, you'll find far more commerical installations using coaxial cable or Twinex in spite of the greater expense, because of the greater ruggedness, and freedom from interference pickup it offers. Even non-commercial installations in customers' apartments in midtown areas often require it, if good results are to be had, and this possibility should not be forgotten.

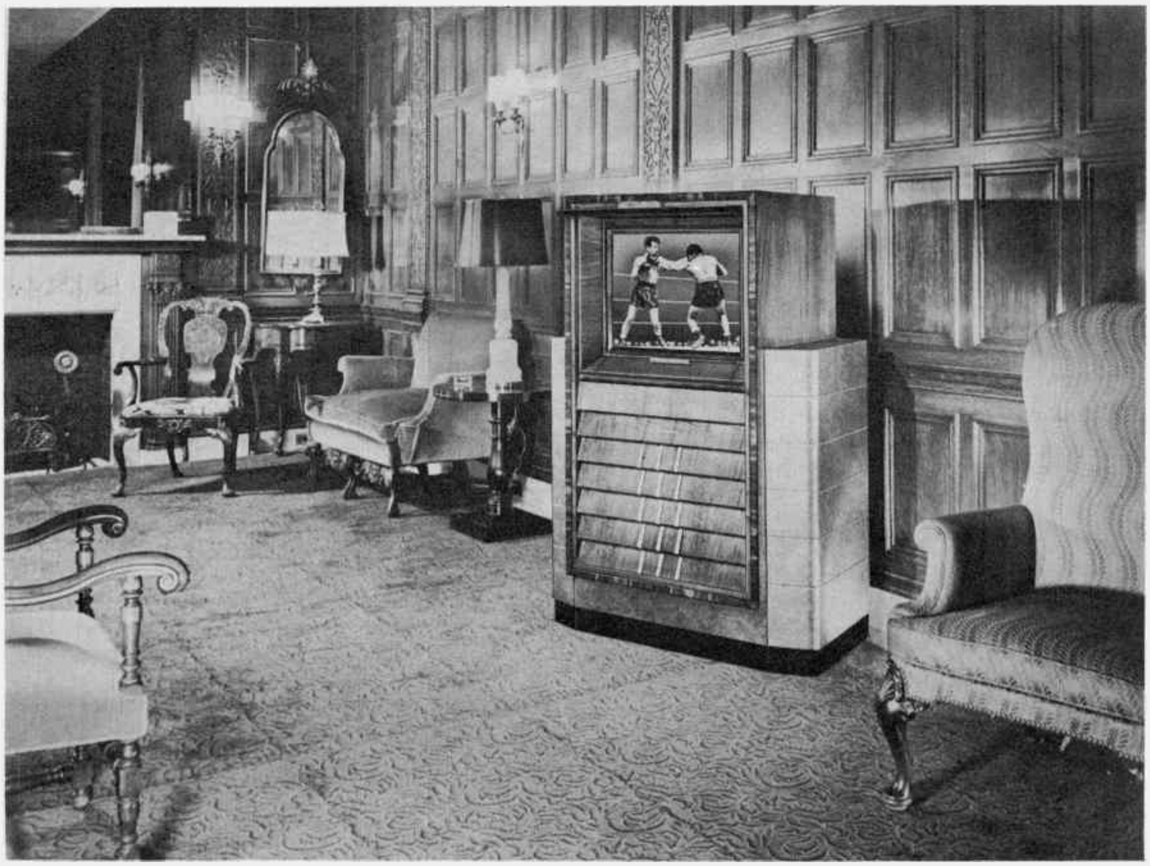

Fig. 10-6

PLANNING THE INSTALLATION

10-2. There is always quite a bit of information in any service shop about the conditions existing in the area it serves. The experience already gained is a continually growing fund that should be available to every man working out of the shop. It is usually passed on to everyone who can use it, either in the course of regular shop talk, or by the various means mentioned in Lesson 9. The point is that you *can* get an idea of general conditions in the area where you work before you actually start for the job, and it's up to you to keep as well posted on your area as you can.

Non-Uniformity of Midtown Conditions. – In general, the factors affecting an installation will vary much more from building to building in midtown areas than in suburban and fringe areas. For instance, an installation on a 12-story hotel building in midtown New York will probably be quite different from one on the roof of a 40-story office building across the street, or even right beside it. On the other hand, installations in adjacent dwelling houses in a quiet suburban neighborhood may show practically identical signal levels, orientation, and general results. This difference is due in good measure to the greater differences in the heights of adjacent midtown buildings, and the big changes in reflection effects, cancellation, etc., produced by moving a midtown antenna even a few feet.

Due to this difference, it is pretty hard to get an advance idea of what you're going to find at the location, unless you already have information on an installation in the very same building. When this is the case, you may take advantage of such knowledge to shorten and speed the job. As an example, you may know from the address that a certain installation is in a building where the only usable transmission line route down from the roof is through an electrically noisy elevator shaft. From that, you know already that the job will probably require coaxial cable, or Twinex, and if you're familiar with the other installations in the building, you may even know about how much line will be needed, where you can put the antenna, and several other things, just from the address.

These are points to be considered when you start on your job orders. On your way to the location, such planning ahead will often cut an hour from a job, or insure that you have any special equipment a particular location requires. Of course, any special information that you get from the dispatcher with your job orders should be added into your thinking ahead, too.

Unlike the case in suburban installations, you're not likely to pick up much useful information driving to a midtown job. The kind and orientation of antennas will usually be meaningless so far as your particular job is concerned, even if you could see many of them. And the traffic conditions will usually justify your full attention to the task of driving, anyhow.

Things to Find Out on the Job. – Unless you already have knowledge of the building from previous installations there, you'll have quite a bit of information–gathering to do before you can really get down to the business of jockeying the antenna around and driving in stand-offs. After contacting the customer and learning where the set is to be put, the model, and such details, your next move will usually be to contact the superintendent, to find out where the antenna can go, how you can route the lines, how to get access to the roof, and any other information you're likely to need. In this respect, don't forget to check with someone for an a-c power outlet you can use for the receiver power source. Many business buildings have both a-c and d-c, and in some, the outlets are similar, which can lead to trouble.

The general remarks about positioning the set, the customer's wishes etc., that were covered in Lesson 9 also apply here, although usually you're limited in choice more by the conditions you find in the building than by anything else. This is because it is usually harder to provide the desired satisfactory pictures in midtown installations, because of the points already covered in this Lesson. For instance, if antennas aren't permitted on the roof at all, which is sometimes the case, you've got to fall back on the internal antenna, an indoor V, or perhaps the window type, if it is permitted. If rooftop antennas are permitted, it's a good idea to get a test line of twin lead strung as soon as the unpacking job is completed. If you have a two-man crew, one man can be setting up the receiver while the other gets detailed information and advice from the building engineer or his representative, and gets the line and antenna ready.

The condition of the roof is not likely to be bad on the buildings usually found in midtown areas. Managers of city buildings know it is good economy to keep roofs in proper repair. If you're in doubt, check with the engineer or superintendent about the place you wish to mount the antenna, and the route you have in mind for the transmission line. And don't forget that, if you are still doubtful about the condition of the roof, a written release is required before you are in the clear in case of subsequent damage.

One other point not directly connected with the possibility of leaks, but definitely related to the condition of materials on the roof, is the matter of anchorages for your antenna mount, or guy or safety wires. Wind velocities are likely to be greater on top of high buildings than on suburban roofs, and the danger in case an antenna is blown off a midtown roof is much greater. This is true not only because of the height, but because so many more people and items of property are crowded into the possible danger area. By all means be extra careful to choose good, solid materials into which to sink any bolt or lag screw holes, and make sure the part you fasten to is well anchored to the building itself.

Alternative Mounting Places. – Usually, on first looking over a roof, you'll spot two or three possible places for the antenna, but it's quite likely that one will appear preferable, providing a stronger mounting, an easier line run, etc. The main thing is to size up quickly the alternative mounting places, so you can select the most practical one for your first placement and orientation attempt later. Of course, you must juggle, in your mind, *all* the factors involved in making your choice, just as you do in suburban locations, or anywhere else. The considerations of possible line routes, mounting, and the others listed in Lesson 9, also apply here.

Transmission Line Routing. – While you're spotting possible antenna locations, you also have the matter of the transmission line routing in mind, if you are really on the ball. Such points as suitable support, how best to make the vertical part of the run down to the proper floor, and how to keep the line clear of hazards such as openable doors and windows, places where people must walk, etc., must all be considered.

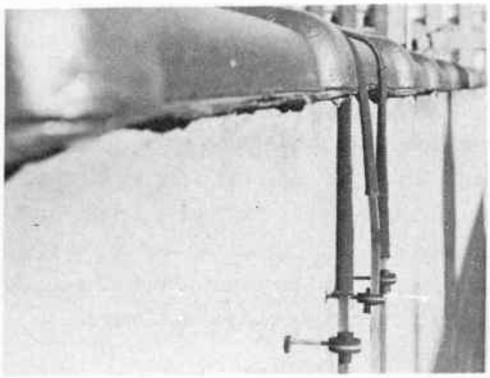

Fig. 10-7

In addition, there is another special factor that is not ordinarily part of the problem in suburban work. In midtown areas, you will probably find it necessary to use coaxial cable transmission line more often. This type of line can be installed along routes that are unsuitable for twin lead lines, because it is much less susceptible to signal and noise pickup. If you expect to have to use coaxial transmission line, remember that it is much less critical about being run near conductors or through noisy areas, and plan your run accordingly. Remember, too, that in severe cases, Twinex line may give still better results.

Getting the Line to the Receiver. – In discussing suburban work, this problem referred almost entirely to the matter of bringing the line into the actual room where the receiver was. This usually meant coming through the outer wall near the receiver, perhaps through a drilled hole in a window casing, or entering a basement window, and taking the line up through a hole in the floor of the proper room. In midtown work, the possibility of using the room below to pass the line through is almost nil, for obvious reasons. On the other hand, entering through a window or casing is often very practical, and in addition, it is sometimes possible to carry wires across rooms between wall surfaces, or on top of false ceilings. Here again you'll have to lean heavily on information you can get from the supervisor of the building, or possibly from the tenant. The point is, *get* the information, and be considering the best routing right along, as you work. Business buildings are likely to be tricky in this respect, particularly if you are using parallel wire transmission line, because of various electrical and legal considerations. From an electrical standpoint, midtown buildings are likely to have large amounts of metal in their structure, often painted or otherwise covered so that it is not obvious whether it is metal or wood. Baseboards and door casings are often of metal, for instance, and if you run the twin lead flat against such things, you're asking for trouble due to unbalance

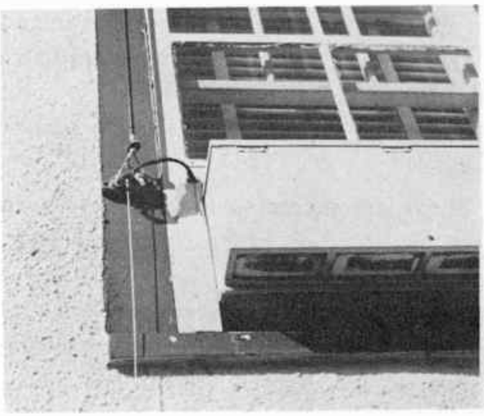

Fig. 10-8

and loss of signal. If you're in doubt, tap carefully with a screwdriver handle or something else that will not mar a painted surface. You can usually tell by the sound whether a fitting is metal or wood. Even plaster wall surfaces may be supported on expanded metal lath, and this, too, can cause trouble with parallel wire lines, if the line runs along the wall surface for a considerable distance.

In choosing a way to get the line from the point of entry to the receiver, you may find it possible, in some cases, to run the line within the thickness of a wall, where there is already a conduit for pipes, other electrical wiring, or ventilating ducts. Some offices have false ceilings with a space above them through which wires can be run. In any such case, there are Building Code restrictions as to the kind of wiring that can be used, and the way it must be protected. In almost every locality, it is necessary that wires run through such inaccessible places have an outer protective jacket, and be run through conduit as well. This automatically rules out running parallel wire line through such places, but it is quite possible to install coax, *if* it is run in suitable conduit. It is worthwhile looking into this possibility, particularly where an installation is to be made in a building still under construction or alteration, as modern architects are getting into the habit of providing for accessible conduit, to facilitate future additions to, or changes in the wiring or piping.

Grounding the System. – In midtown areas, the grounding problem usually resolves itself into how best to make firm contact with the metal frame of the building, as it is usually out of the question to run a separate line all the way to the ground for this purpose. Here you will have to use your powers of observation in locating the best available connection, as there are often dozens of metal structures near at hand. If the antenna has to be placed in the middle of a flat roof, it may be necessary to run a long ground lead across to some suitable connection, such as one of the supports for the water tank. Don't fall for the temptation of hooking onto the nearest pipe protruding from the roof, for in many places, soil or vent pipes are actually very poor grounds. The copper flashing around the parapet, along the upper edge of the roof's watertight layer, is also likely to be a poor ground connection. Your best bet is to get to a cold water pipe, or a part of the building frame, or perhaps at the elevator shaft bulkhead or at the water tank. It's a good idea, if possible to make a test before you accept a grounding point as being suitable.

Mounting the Arrestor. – In general, the problem here is the same as in Lesson 9. The arrestor should be protected from moisture as much as possible, even though improved models are not so susceptible as earlier ones to change of performance because of dampness. A water or radiator steam pipe that will permit attachment of the arrestor inside the apartment or office suite can usually be found. In *some* cases, a metal baseboard will serve, if holes are drilled and tapped for the mounting. However, metal baseboards are often so installed that they are electrically insulated from the building frame, in which case they will *not* serve. Of course, you should keep the installation as neat and inconspicuous as possible, no matter where it is made. Installing the arrestor on the mast is definitely bad practice, and should never be done.

SELECTING THE ANTENNA

10-3. Right here we run into a fairly complicated situation, due to the prevalence of reflection troubles in midtown areas. One of the effective ways to minimize ghost troubles is to use a highly directional antenna, which does not respond well to reflected signals arriving from directions differing substantially from the path followed by the direct signal. But here serious trouble pops up. In midtown locations, *the transmitting antennas do not all bear in the same direction from the receiving antenna site.* This means that an antenna that is highly directional will not only discriminate against unwanted ghosts coming from the side and rear, but will also respond poorly to signals from television transmitters in these directions as well. The map shown on the next page illustrates this.

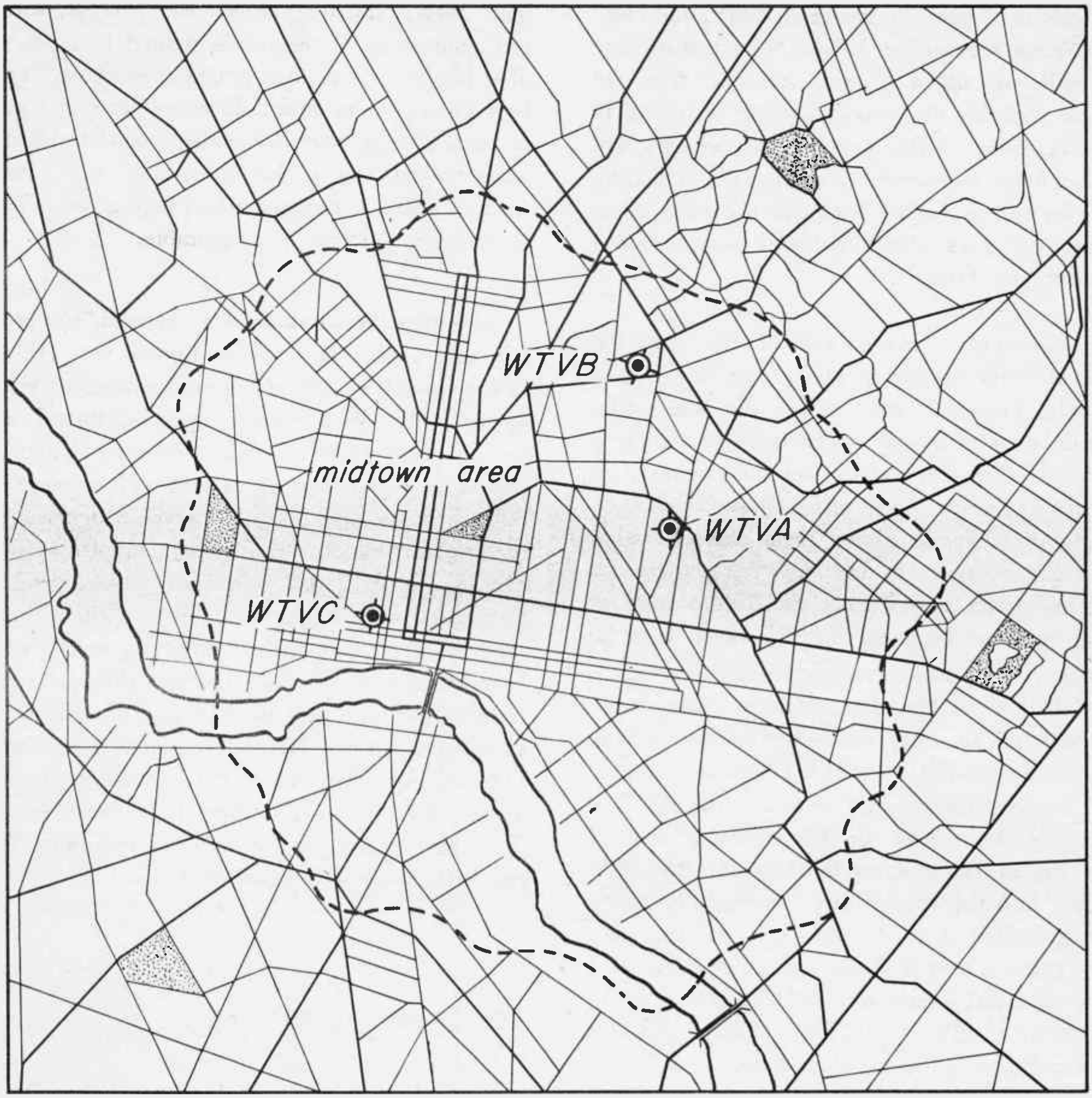

Fig. 10-9. A typical midtown area.

What to do? We can't use an antenna that receives almost equally well from all directions, unless there's practically no ghost trouble on any channel, a condition so rare in a midtown district as to be freakish. So far, there isn't any cheap, easy solution to this problem. Most installations where the conditions are really severe wind up as a fair compromise between the number of channels received well, the ghost situation, and the cost. Obviously, if we could provide one highly directional antenna for each channel, and orient each one to receive a single channel with maximum efficiency, we'd have the best possible result. Then all that would be necessary would be necessary would be to switch to the proper antenna when tuning to a particular channel. Of course, the customer would almost have to have a private entrance to Fort Knox to make such a costly installation very attractive. Another fairly effective solution in those cases where the customer is willing to stand the expense is to install an all-channel antenna that can be oriented on each desired station by remote control from the receiver. This is practical, but requires a more elaborate installation as noted, and adds another control to those on the receiver, which must be manipulated by the customer. However, where this extra control and the added expense is acceptable to the customer, the rotary arrangement is often the best answer. This, and other special installation problems, will be discussed in Lesson 12.

Use of Multiple Antennas. – Probably the most practical solution for the more serious cases is the use of two or perhaps three antennas, with a switching arrangement, so that the desired one can be selected at will. This is also expensive, but the results obtained often justify the cost, particularly in commercial installations.

On some sets, it is possible to add an extra switch wafer at the rear end of the channel selector switch, and use this to connect the proper antenna to the set when the selector switch is turned.

If two rooftop antennas are used on separate masts, two complete transmission lines must be run, of course. Alternatively, it may be possible to get satisfactory results using a single rooftop or window sill mounted antenna, and a second antenna of the indoor V, or perhaps the internal antenna supplied with later models. In midtown antenna work, it is often impossible to make the final antenna selection until some preliminary trials have been made with a dipole and reflector type antenna.

General Rules. – The situation will differ from city to city, and at different points in any given city, so that it is impossible to lay down hard and fast rules that will solve all problems. However, here are some general considerations that will prove useful.

1. Where only one or two stations in the same general direction have serious ghost trouble, try using a dipole and reflector type antenna oriented in a compromise direction so as to get satisfactory pictures on these two channels. Use the internal antenna or a V indoor antenna for the others, if it will serve. If the two channels troubled by ghosts are on high and low band channels, you may do better with a high-low combination antenna, with the high band section oriented for the best picture on the high channel, and the low section set for the low band station.

2. If the stations troubled by ghosts are in the same band (high or low), and happen to lie in quite different directions, consider the use of two separate antennas, properly oriented. Remember that you may be able to get good pictures from one or two of the other stations on each of the antennas, also.

3. If serious ghost trouble is present on several channels, talk the matter over with the customer and see if he is willing to settle for an antenna and orientation that will give him adequate pictures on his favorite stations only. Be sure to explain the alternatives of using more antennas, or installing a rotator and suitable directional antenna, and the matter of the added cost.

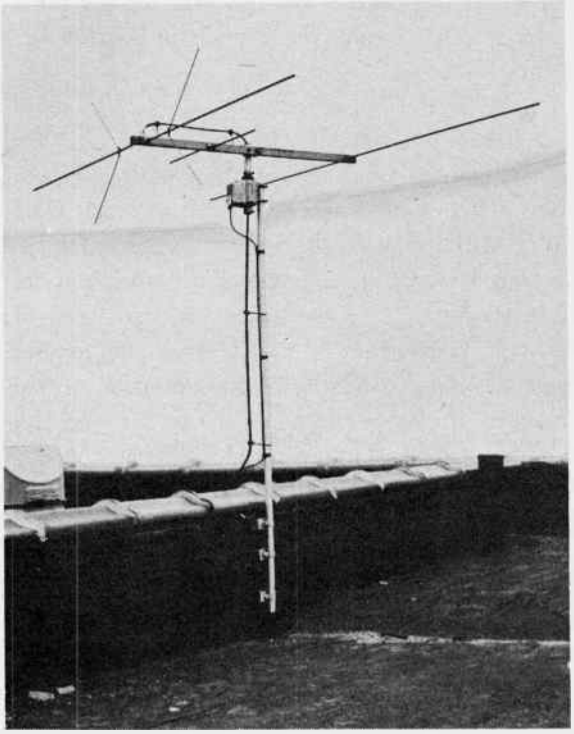

Fig. 10-10 Antenna with rotator.

4. Do not overlook the possibility that one or more of the alternate antenna mounting places you spotted on the roof may provide better overall results. Keep this in mind also when installing more than one antenna. Your preliminary tests (to be covered in the next section) will help a lot here, by showing you what channels can be received with the antenna at one or more of the possible mounting positions.

5. Bear in mind what was said earlier about small vertical movements of the antenna. Such adjustments will often minimize a ghost sufficiently to make the difference between a usable picture and one the customer will reject. This fact is bound to have some bearing on your choice of an antenna, too.

6. Where excessively strong signals from one or more stations are a part of the problem, it might seem advisable to select the antenna that provides the least signal voltage. However, because of noise, interference and ghost problems, it is almost always better to select the antenna that gives the highest ratio of desired signal to ghost, noise or interference voltages. You can dispose of the excess voltage with resistive networks or other means we'll cover in Section 10-5 of this Lesson.

Difficult Situations. – Regardless of what has been said here, and all the information you can pick up from your workmates, and in other ways, you're still going to run into situations that tax all your knowledge and ingenuity. All you can do is try whatever expedients you can think of, and use your head in considering the results. Don't hesitate to explain the situation to the customer, if you get to a point where a question of added expense is involved. He must understand the choice you are offering before he can decide what he wants to do.

Above all, don't let even the most exasperating problem involving multiple ghosts, interference, noise, and other difficulties make you throw up your hands in complete defeat. Almost always there's some way to get a fair result, but the guy who gives up when the going gets tough isn't going to find it.

PRELIMINARY PLACEMENT AND ORIENTATION

10-4. These expressions mean just the same as they did in Lesson 9, of course. Due to the close interlocking of the problem of selecting an antenna with the problem of placing and orienting it in these tough midtown jobs, much of the information on placement and orientation has been at least mentioned in discussing the last topic.

We'll assume that you've determined roughly what sort of antenna you're going to need, by considering the factors treated under the last section, which covered antenna selection. If you have made a check with the internal or indoor antenna while considering a choice of antennas, you already know whether or not one of these will be satisfactory. Chances are it will not, but in case you've decided to try these because of special considerations, placement and orientation will be limited by the customer's requirements, as well as technical considerations. Try results with the internal antenna by orienting the receiver within the limits the customer's requirements will permit.

With the indoor antenna, try various orientations with the antenna placed on top of the receiver, or on some other nearby horizontal surface. Often it will be possible to put the indoor antenna on a window sill or shelf near an outside wall, with fair results. However, indoor antennas cannot do miracles, and when you have done the best you can, you'll have to explain this to your customer, if no other antenna can be used. It is sometimes possible to use several folded dipole antennas made of parallel wire line, with a switching arrangement to select the best one for each channel, but this sort of arrangement comes more under the heading of special installations.

In placing an outdoor antenna, make your first try at the spot you consider best, considering all the factors involved. However, keep any alternative places in mind, as even a small change in antenna location or height will often produce a large change in reception, in midtown installations. This is due partly to the larger number of conductors near the antenna, and partly to the general architecture of midtown buildings.

Exact Placement May Be Critical. – Installations on metal roofs are often particularly touchy as to placement of the antenna. Small changes in antenna height, placement, or orientation are likely to make big changes in the picture. This means you must work a bit more slowly and carefully in making such changes, in order not to overrun the best adjustment.

If your first antenna spot gives satisfactory results, well and good. If not, better check one of the alternate places, rather than take a great deal of time trying for a compromise arrangement at the first spot. In all placement work, you must naturally take into account the shadowing effect of large buildings around the location. Many midtown rooftops are large enough to give you quite a bit of leeway in avoiding this and similar troubles.

Best Compromise Results. – Your final choice of place and orientation will naturally be the compromise that produces the best average results on *all* channels receivable at the location, unless the customer requests you to favor some particular channel or channels. This is something you should find out about as soon as you discover that some compromise is going to be necessary, for it affects all the rest of your operations. A good scheme is to explain the problem to the customer, showing him the picture results, if possible, and then take note of the channels he wants you to favor. And incidentally, when you make the final adjustment and orientation, don't forget to favor those channels he wants.

MAKING THE INSTALLATION

10-5. Regardless of whether you are installing an antenna in a suburban, midtown, or fringe area, the general results you want are the same – satisfactory pictures on as many of the active channels as possible, long-term dependability with minimum maintenance, compliance with safety rules and building codes, and acceptability to the customer and others concerned, with reasonable economy in labor and material costs. However, the problems you must overcome are somewhat different in each of the three areas. Naturally, the methods you use to get the desired results will also have to vary, if they are to solve the varied problems involved.

From the earlier sections of this Lesson, you already have some idea of the differences between conditions in a midtown location and those discussed in Lesson 9, where we covered suburban installations. The greater noise and interference levels in business and industrial areas of cities often make it necessary to use Twinex or coaxial cable transmission line, noise filters in the power line, and other such devices to get a satisfactory signal-to-noise ratio. The architecture of midtown buildings often requires long transmission line runs; there are many reflected signals, and so on. In fact, one particular trouble shows up often enough to justify some special consideration. This is the matter of excessively strong signals from one or more stations, which we mentioned earlier, in connection with choice of antennas.

What To Do About Excessive Signal Strength. – Where overly strong signals from one or more stations are a problem, there are three possible ways to tackle it. These are: (1) orienting the antenna to reduce pickup from the strong stations; (2) inserting resistive "pads" in the transmission line at the receiver input, and; (3) shunting the input with a tuned stub. Of these methods, orienting the antenna is likely to be inadequate, except in mild cases, and it may also weaken signals from other stations too much.

Resistance Pads. – Resistive pads (networks of resistors) reduce the signal strength on all channels, and so are only helpful when the weakest channel can stand as much reduction in strength as is necessary to permit good reception on the strongest channel. Connecting a single resistor of some value between, say, 25 and 1000 ohms across the receiver input terminals is sometimes done. However, this results in an impedance mismatch, which is likely to produce a "built-in" ghost if the installation has a long transmission line. Instead, attenuating pads of the "H" or "T" configuration should be used. These can be made up from standard values of RMA half watt resistors. Suitable values to reduce the signal voltages to one-half or one-fourth the unattenuated value are given in Fig. 10-11.

The H configuration is for 300 ohm parallel wire or Twinex lines. The T pads are meant for use between coaxial line and the matching transformer at the receiver input. Resistor values given in Fig. 10-11 are the nearest RMA standard value to the exact calculated value, in the 5 or 10 percent tolerance class. The values are not

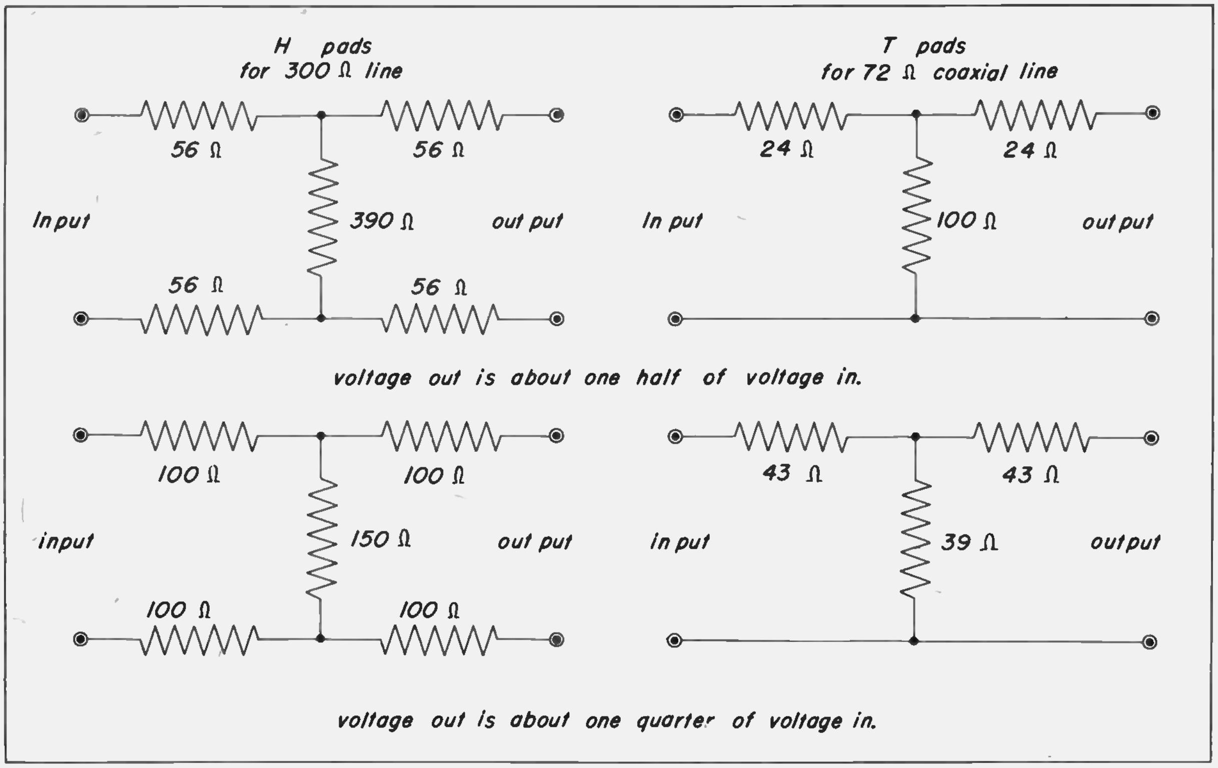

Fig. 10·11 Resistance pads.

critical, and the nearest values in the twenty percent tolerance class may also be used, with somewhat less accurate impedance matching and loss percentage. One-half or even one-quarter watt resistors are adequate size, but the one-half watt type has somewhat less reactance at television frequencies, and is preferable.

Such pads will seldom be the perfect answer because of the loss on all channels, which limits their usefulness. For this reason, only two sets are shown, capable of reducing the voltage applied to the receiver to one-half or one-quarter of the applied voltage. More complete information on such attenuating pads is given in any standard radio reference book.

Line Stubs. – To reduce the strength of a single station, without reducing all other stations an equal amount, sections of parallel wire line or Twinex can be connected across the receiver input terminals in parallel with the transmission line. Such sections of transmission line are called stubs. They must be accurately cut to be electrically a quarter or half wave long at the frequency of the signal that is to be attenuated. The formulas for calculating the length of such stubs are simple. Here they are:

For the quarter-wave stub: $L = \frac{246}{F} V$

For the half-wave stub: $L = \frac{492}{F} V$

In each of these formulas, L is the length of the stub in feet, F is the frequency in megacycles, and V is the velocity factor of the particular kind of line used. This factor must be used because radio waves do not move quite as fast on transmission lines and other conductors as they do in free space. The factor for parallel wire line is .82 and for Twinex it is .84. Thus a quarter-wave stub for 100 mc cut from parallel wire line comes out to be 246 times 0.82, divided by 100, or 2.01 feet long. A quarter-wave twin lead stub cut to attenuate the 211.25 mc picture carrier of Channel 13 works out to be 0.95 feet long.

In practical work, it is best to cut the stub somewhat longer than the calculated length, attach it to the input terminals, tune in the station accurately, and then trim the stub a little at a time until the desired reduction in signal voltage is obtained. Unfortunately, the quarter-wave open end stubs made of parallel wire line are quite susceptible to detuning by objects near them, or even a little bending or other movement. Often, moving the cabinet slightly after the stub has been tuned will detune it so far as to make it useless. A better scheme is to cut the stub for a half-wave, and short circuit the end not connected to the receiver input. This type is not so easily detuned by surrounding objects. A still better arrangement is to use stubs made of 300 ohm Twinex, cut either to a quarter-wave, with the end left open, or to a half-wave, with the end short circuited. This latter is probably the most stable stub of all. Such a stub, with the ends sealed against moisture, and the shield grounded to the receiver chassis, will usually be almost immune to detuning by movement of the cabinet, or other objects near it. If it is taped or otherwise fastened to the back of the cabinet, and then carefully tuned by trimming a little at a time (not forgetting to short circuit the conductors after each trim, of course) it can usually be relied upon for a long, dependable service.

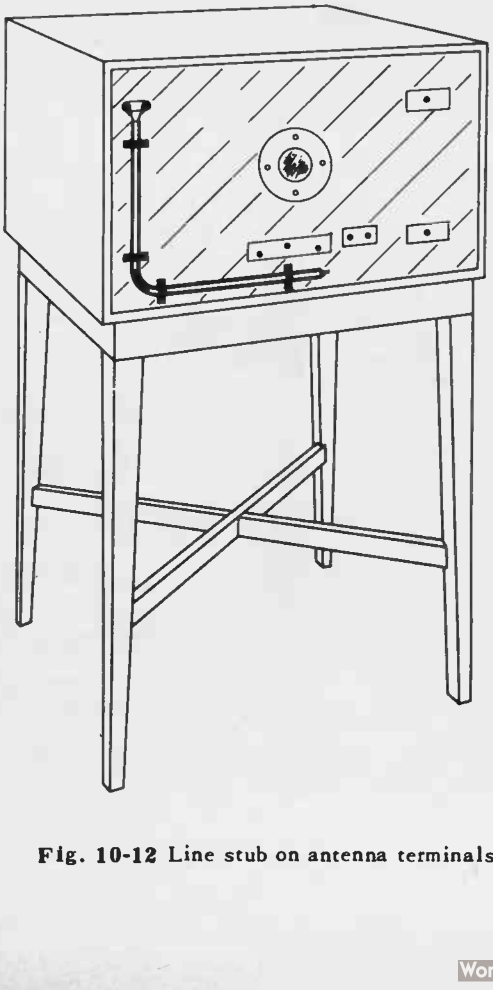

Fig. 10-12 Line stub on antenna terminals.

Routing May Determine Choice of Line. – During your preliminary placement and orientation, you will have found out a good deal about noise and interference conditions in the building, and the possible routes for the transmission line. If your tests have shown that interference is being picked up by the twin lead, you may have to decide between using coaxial cable and matching transformers, and routing the twin lead another way, where it picks up less interference. Usually you will have made this decision during your preliminary placement and orientation, but if this work hasn't indicated definitely whether or not the twin lead will do the trick, better play safe. Get the antenna mounted in the place and with the orientation you have determined is best, and make a quick try of the alternative twin lead routing, if this can be done without too much time expenditure.

Shaftways Present Opportunities and Problems – In tall steel frame buildings, air and elevator shafts often offer convenient passages for vertical runs of wiring, piping, and all sorts of things necessary to the operation of the building. Quite often such shafts can be used (check with your Supervisor) for running television transmission lines up and down between floors; but unfortunately, a good deal of caution is necessary, unless you are using coax or twinex. The very fact that the shaft *is* so convenient means that it will be carrying a lot of things like electrical wiring, water pipes, etc., all of which are electrical conductors. These conductors are often carrying noise voltages from oil burners in the basement, energy fed back into the line from diathermy machines, telephone dial signals, electric razor hash, and similar disturbances. In addition, such shafts have an aggravating tendency to act as wave guides, channelling almost any sort of high frequency electrical noise vertically through the whole building. Since twin lead lines do pick up some signals along their length, due to unbalance and other effects, it often happens that you can't use such a shaft to carry the line, even though it's mechanically convenient. If you do your preliminary tests with the line down such a shaft, bear in mind that this may be the source of any serious noise trouble that shows up.

In such cases, make a test with the line run by some less noisy route, such as down a rear wall of the building, perhaps close to a fire escape which will make the mechanical work easier. In a good many cases you'll find that this will substantially reduce noise pickup. Even when this alternate route requires a considerably longer piece of parallel wire line, you'll often get more satisfactory pictures this way. This is because signals are usually so strong in midtown areas that you can afford the small signal loss in the additional length of parallel wire line quite easily, in return for the much larger reduction of noise voltages.

Other Routing Considerations. – Be sure to keep in mind, while you are selecting an alternate route for such a test, that it must be acceptable on all other counts, too. That means it must be practicable to make a permanent installation of the line, it must perform satisfactorily, and it must comply with Building Codes and regulations, and the preferences of the owner and tenant, if possible.

Actual installation of the antenna requires much the same methods and materials as in any other case.

Antenna Mounting Methods. – Midtown buildings are predominantly steel frame office structures, with brick or stone facing, and flat or partly flat roofs. Naturally, the mountings you use will be the ones best suited to such buildings. The parapet mounting, using wood spacer blocks held to the vertical surface of the wall with lead anchor bolts, is very useful where the structure will permit it. It avoids the necessity of using guy wires, which are something of a nuisance to install in many cases, due to the difficulty of finding suitable anchorages. Occasionally you will find a wooden water tank house on the roof of a building, to which you can anchor the spacer blocks or the mast bracket, with lag screws in drilled pilot holes. This is easier to do than banging holes in a brick, con-

Fig. 10-13(a).

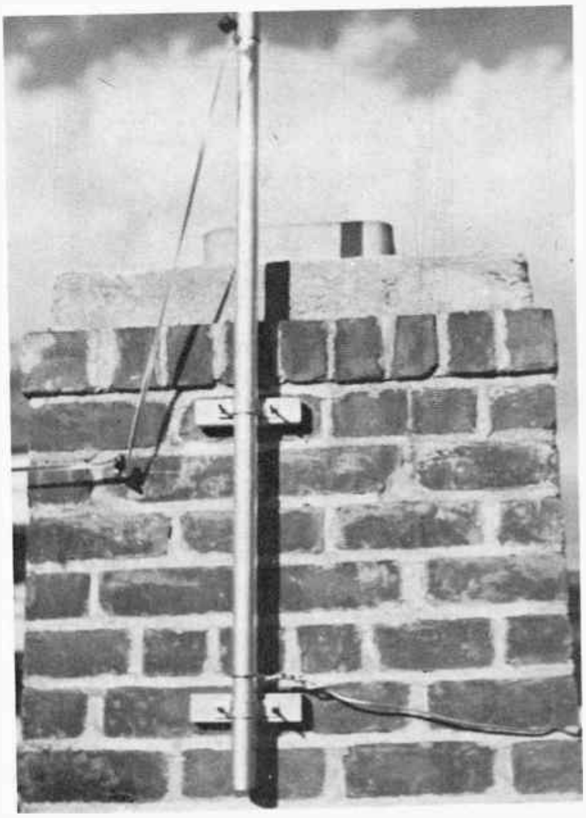

Fig. 10-13(b)

crete or stone parapet, and if other conditions permit, its a better choice, for this reason. However, don't let the attraction of this easy working feature make you overlook such things as the building regulations, the line run, the grounding problem, and similar factors.

You won't find many suitable spots for using the steel strap chimney mount in midtown locations, except on small apartment buildings, and these are not usually right in the middle of the midtown area. In cases where it can be used, it is a real time saver, of course, because of the tedious drilling you avoid.

A good many midtown buildings have roofs that require use of a flat wood base and bracket, to support the butt of the mast, and guy wires to hold it upright. This kind of installation is likely to be time consuming, due to the need for finding suitable anchorages for the guys, and the care needed to avoid causing roof leaks. Quite often, too, part of the roof is accessible to tenants, and then guy wires become a tripping hazard, or interfere with normal use of the roof in other ways. You'll have to check such points with the Building Engineer or some other responsible person, as you're sure to hear about it later if there's trouble.

Also, when for some reason the antenna must be mounted near the center of a roof, running a ground wire is something of a nuisance, if required. For such mounts, it usually means running the ground wire across the roof to some point where good contact with the frame of the building can be made. In such cases, it is a great temptation to run it to the nearest soil pipe or similar fitting, and tie on. You must resist this impulse if you expect to keep out of hot water, because this practice is still forbidden by most local Building Codes and there is heavy liability for lightning damage, if it can be proven that the installation violated the Code. In most localities, grounding to water supply pipes is considered okay, but even on this point you'd better check with someone with authority to make sure, if you don't already know the answer. The general applications of Building Safety Codes to television installation problems are being studied with a view to easing and clarifying such problems; but until changes are announced, stick to what the law requires.

Safety Wires. – One more general precaution about antenna mounts on tall buildings is quite important. In the event that an antenna is torn loose by the wind or some other unforeseeable cause, it is almost certain to cause serious damage, or even loss of life, if some means of preventing it from falling to the street is not used. In fact, in some localities, antennas must be mounted at least as far from the edge of the roof as they are tall, as a precaution against this possibility. Antennas mounted overhanging the edge of a building, or at any point where they might fall into the street if torn loose, must be secured with a safety wire. This is made of regular guy wire, and must be firmly fastened around the antenna mast, and secured to some sound part of the building structure, as shown here.

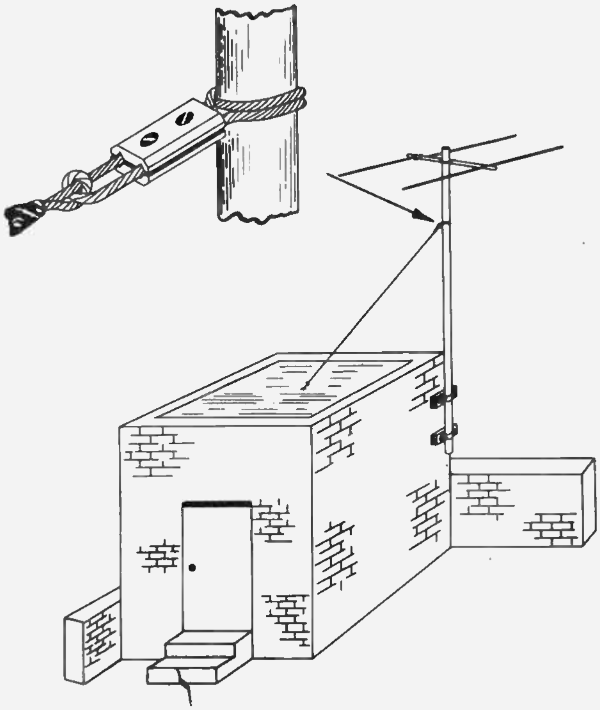

Fig. 10-14

Transmission Line Runs. – Here again, the midtown job is usually quite different from the suburban case. Noise and interference problems are likely to be fairly severe, and the length of line runs required will often be great. Obviously, these two conditions add up to cause trouble in a good many cases, as we noted earlier. However, once you have found a suitable route for the line, the actual business of putting in the stand-offs and securing the line in place will usually not be any more complicated than in suburban locations.

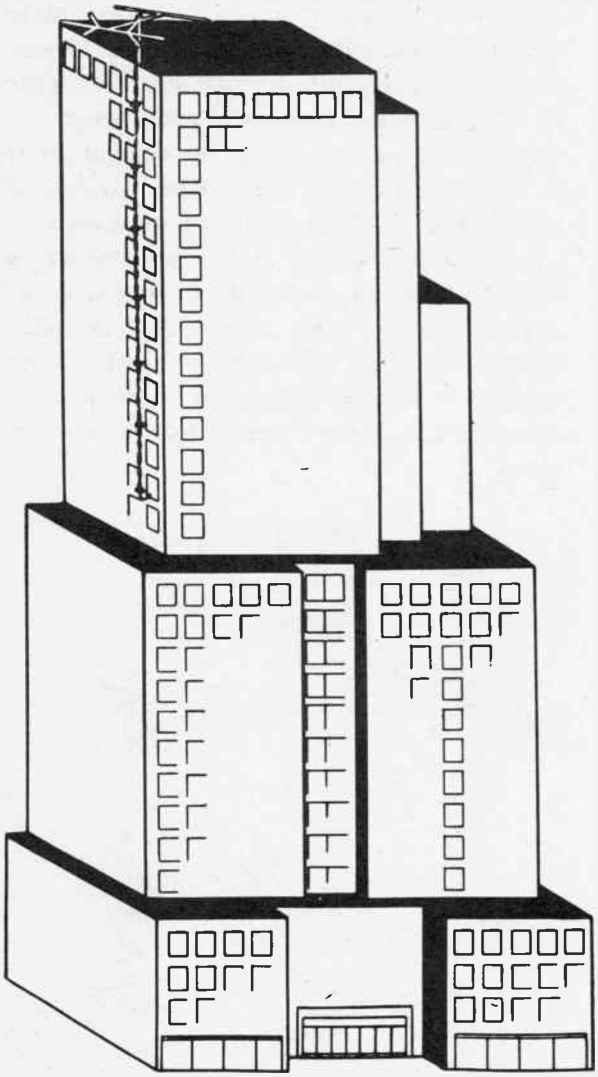

Fig. 10-15

You must observe the same precautions about running parallel wire line near conductors, making enough twists, using enough stand-offs, and the other factors that affect *any* line run, of course. The extra length of line takes longer to install, naturally, but a Rawl drill has no brains, and doesn't know whether you're hammering it in a midtown area, or sixty miles out in the hinterland.

One mechanical precaution on long vertical line runs is definitely in order. The weight of the line can be quite an important factor, particularly when you're using coax. Be sure the stand-off at the top of the run is particularly well anchored, as it may have to take more than its share of the weight. Of course, you should try to distribute this load more or less evenly among all the stand-offs up and down the run, and take special care to crimp the eye of each stand-off firmly, so the polyethylene insulator grips the line tightly. Any slipping under the tugging of wind pressure will ultimately transfer all the strain to the topmost stand-off, and this is likely to result in a service call later on.

One other precaution may be necessary in some locations where it is difficult to get stand-offs spaced closely enough down the length of the run. In such a case, two or three well anchored stand-offs should be closely spaced near the top, with the load equalized between them.

Wherever possible, try to get about one stand-off at least every two floors of vertical height, and even a bit closer together where convenient. All the regular precautions about using loom to guard against abrasion, careful taping where necessary, and proper tension and twisting of the line between stand-offs should be fully observed.

Entry to the Customer's Premises. – At the point where you must bring the wire into the customer's premises, you must be especially careful to avoid creating a leak, or leaving a condition that will cause trouble later. If the line is brought in through a hole drilled in a window or door casing, make sure that the inner end is slightly higher than the outside end, and don't forget the drip loop. The hole must be sealed again around the line, of course, and there should be a stand-off near the entry to prevent any strain on the line from causing damage where it enters the hole. An entry for a transmission line is shown in Fig. 10-16.

However the line is brought in, care must be taken to protect the premises from leaks, and the line from abrasion, and all safety rules must be observed.

Final Orientation. – From your preliminary orientation, you will already have a good idea of

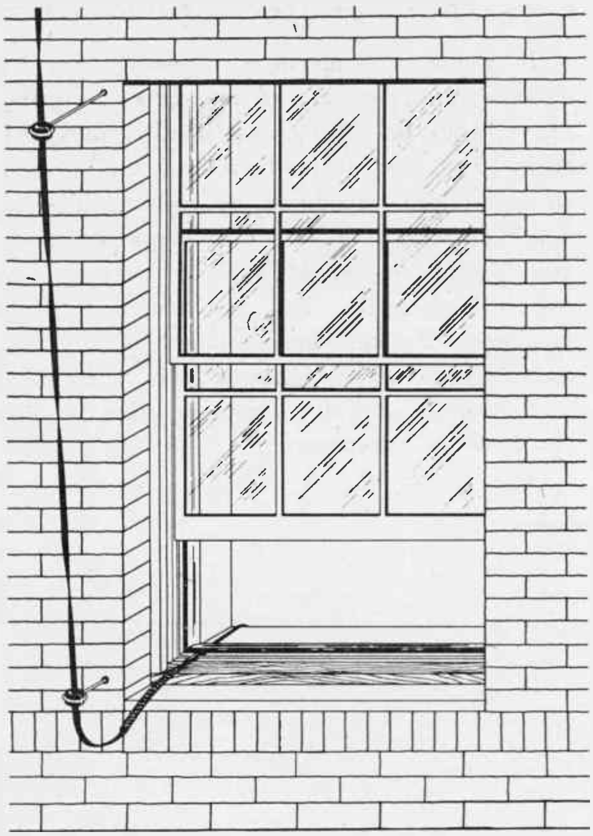

Fig. 10-16.

the reception you can get with the antenna or antennas installed. After the mechanical work of running the line and mounting the antenna has been completed, a final, careful orientation for optimum results should be made. If a compromise is necessary, be sure you comply with the customer's wishes as to which station to favor, and don't forget to try moving the antenna up or down a few inches in the mount while doing the orienting, if the mounting method permits. It is often possible to get some added discrimination against ghosts in that way.

When you are satisfied that the orientation is as good as you can get it, tighten up enough on the antenna mast fastenings to make sure wind and weather will not disturb the orientation. Then proceed with a last check of all parts of the installation outside the building, just as in Lesson 9. When you're sure that everything outside is in order, go ahead with your check of the inside work, and demonstrate the performance of the set to the customer.

FINAL DEMONSTRATION

10-6. Your duties here are much the same as in Lesson 9, with a little extra caution about being perfectly sure the customer does understand what pictures can be had on each of the active channels, at this particular location. Don't try any soft soap or glossing over at this point. You've done your best within the limitations imposed on you by cost and the nature of radio waves, and even if there are defects in the picture on one or two channels, the overall result will usually stand comparison with any nearby installation of comparable cost.

Part of the job here is to familiarize the customer with operation of the set, as covered in an earlier Lesson. The only points of difference will be in those cases where there are two or more antennas selected by a switch, or where an antenna rotator has been installed. In these cases, *after* the customer has learned to operate the regular receiver controls satisfactorily, explain the switching or rotating arrangement, demonstrating which antenna or position of the rotator gives the better pictures on each of the several channels available. If one of the antennas is the indoor V or a Gyro-tenna mounted

Fig. 10-17

on an accessible window sill, you can show how it can be positioned to favor a particular station.

Fig. 10-18

If you're working in a two-man team, one member can take care of the duties described above, while the other cleans up all scraps, puts tools away, and generally returns the premises to their original condition, so you can take your departure without delay. In one-man operation, you can best do the tidying up *after* you're sure that everything is clear and accepted by the customer. The same precautions about courtesy, thoroughness and care apply here as indicated in Lesson 9, or in any work that takes you into the customer's premises.

◆

Directional Patterns of High-Low Combination Antenna.

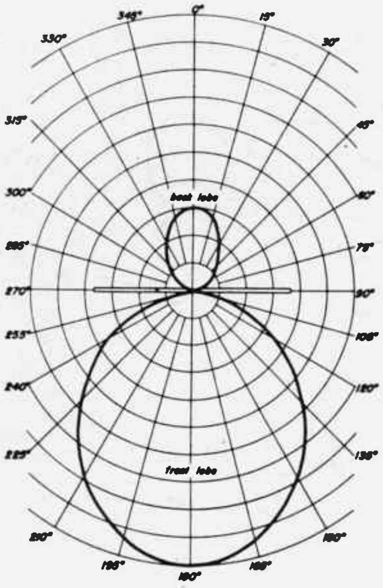

Channel 2

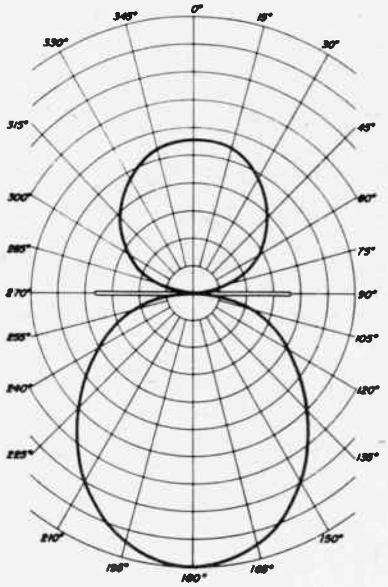

Channel 4

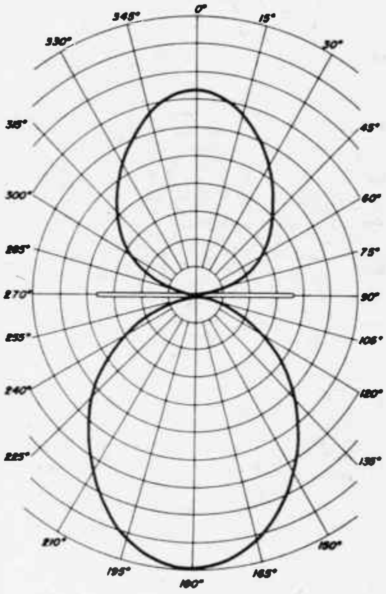

Channel 6

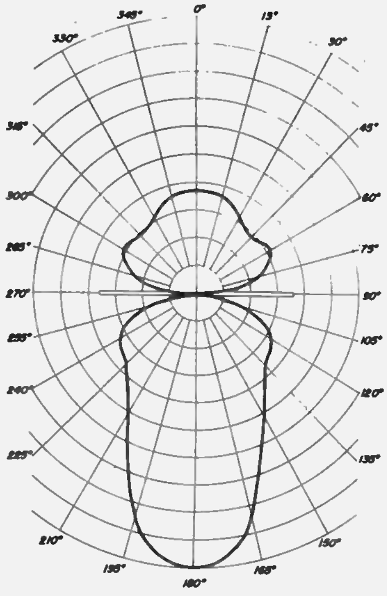

Channel 8

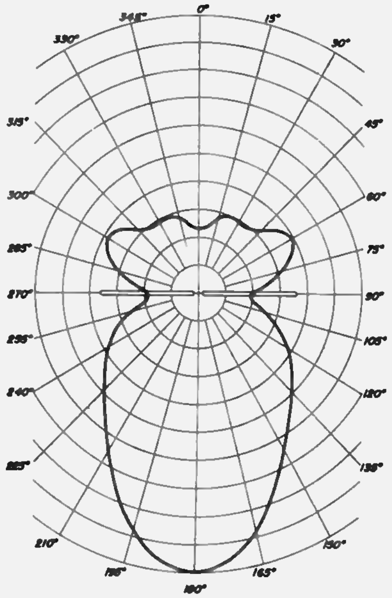

Channel 10

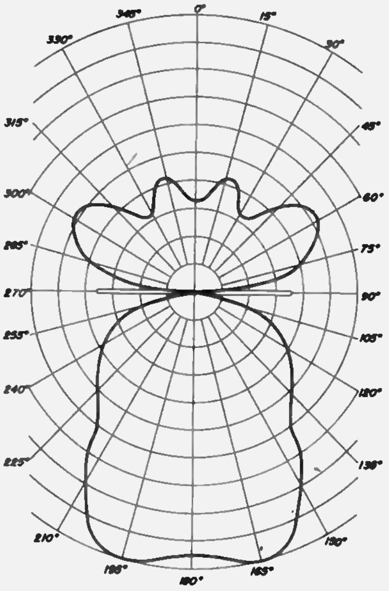

Channel 12

Directional Patterns of Single Bay In-Line Antenna

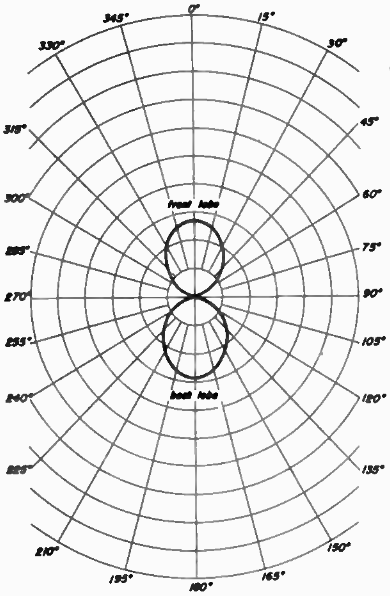

Channel 2

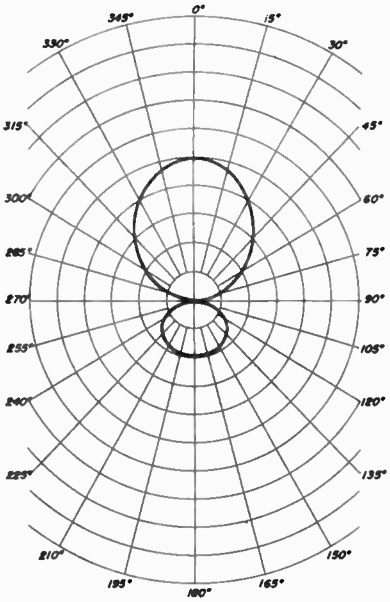

Channel 4

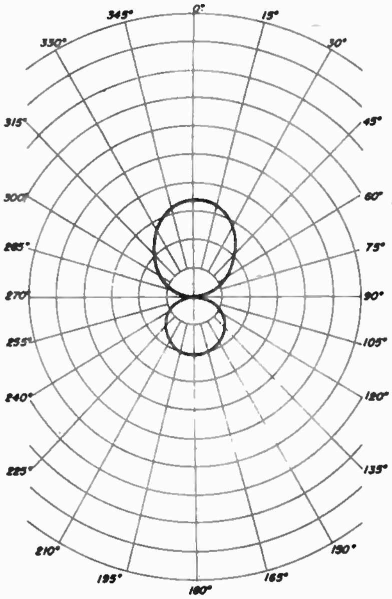

Channel 6

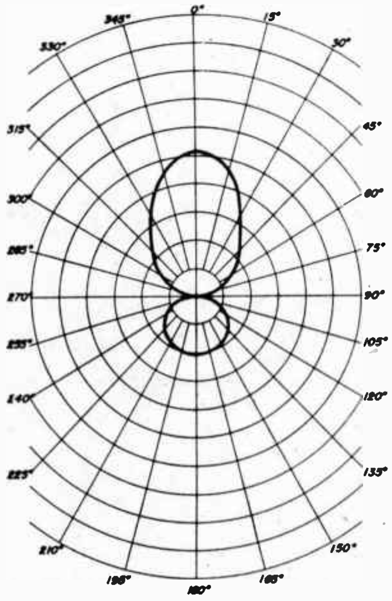

Channel 7

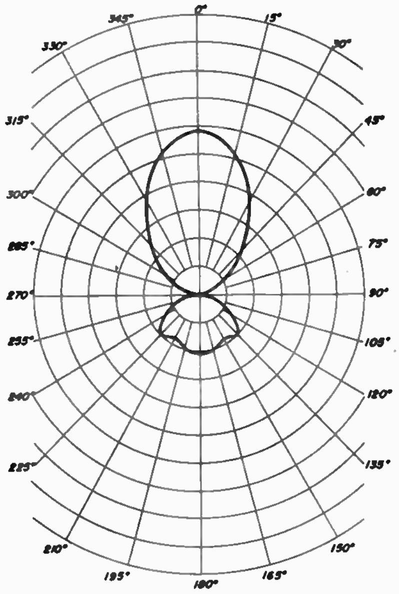

Channel 11

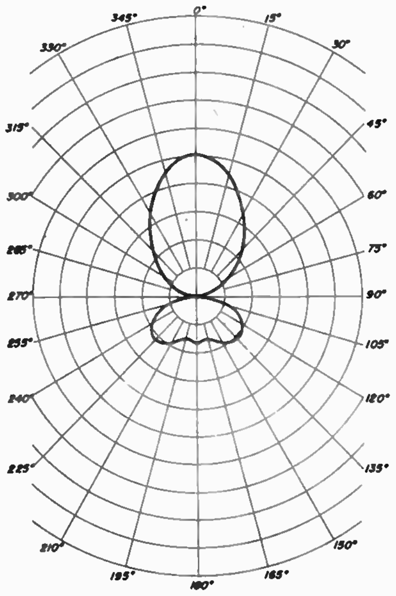

Channel 13

Directional Patterns of Low Frequency Dipole and Reflector, with Wings and High Frequency Reflector

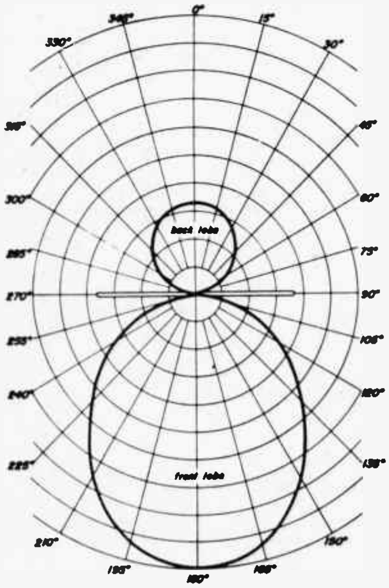

Channel 2

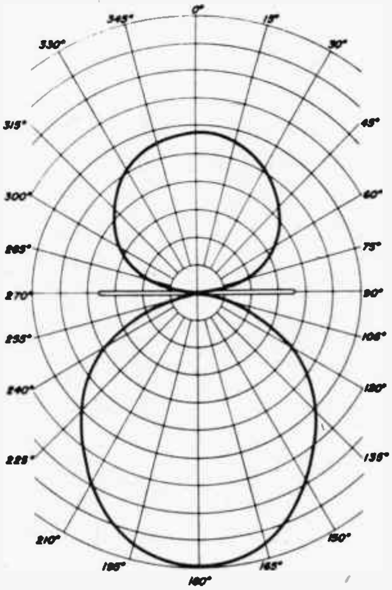

Channel 4

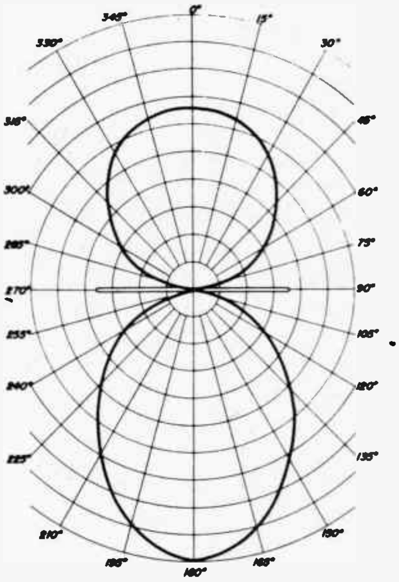

Channel 6

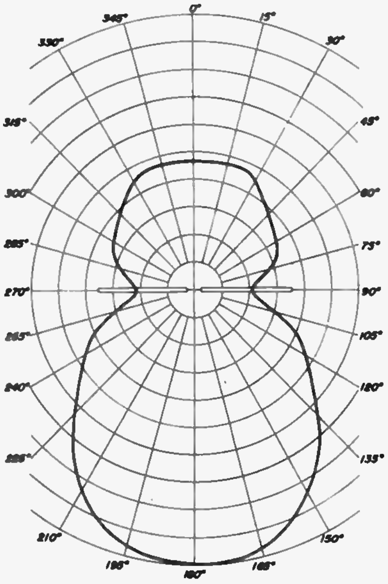

Channel 8

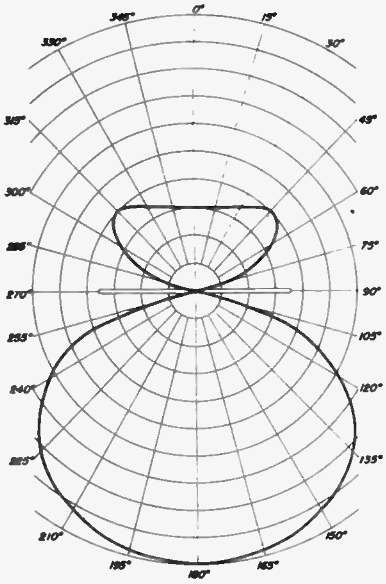

Channel 10

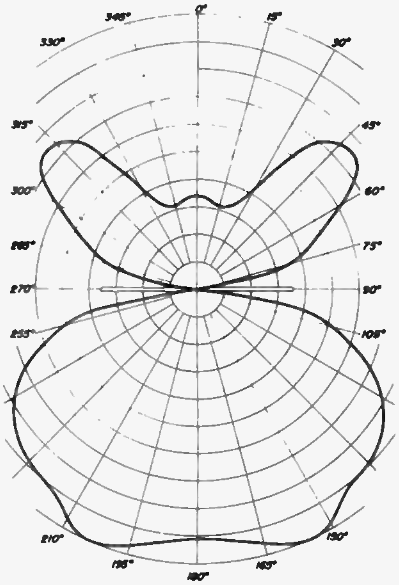

Channel 12

NOTES

NOTES

NOTES

TELEVISION SERVICING COURSE

PREPARED BY

RCA INSTITUTES, INC.

A SERVICE OF RADIO CORPORATION OF AMERICA

HOME STUDY DEPARTMENT
350 West 4th St., New York 14, N. Y.

LESSON ELEVEN

ANTENNA INSTALLATION

(PART 3 - FRINGE AREAS)

11-1. General Considerations

11-2. Planning the Installation

11-3. Selecting the Antenna

11-4. Trial Placement and Orientation

11-5. Making the Installation

11-6. Final Check and Demonstration

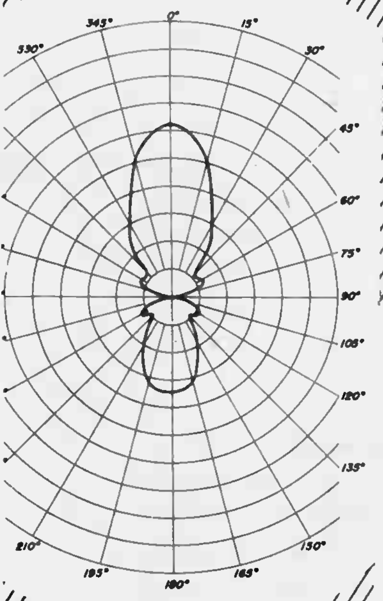

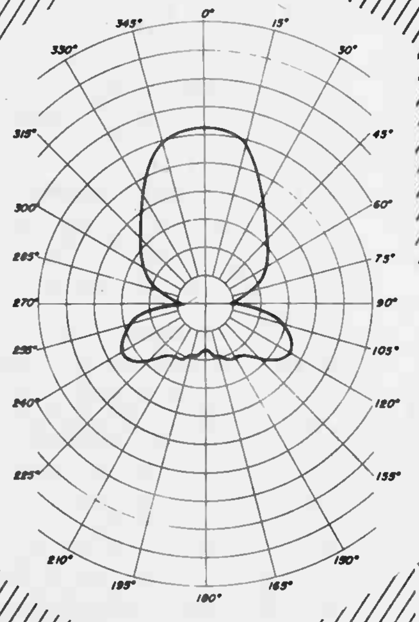

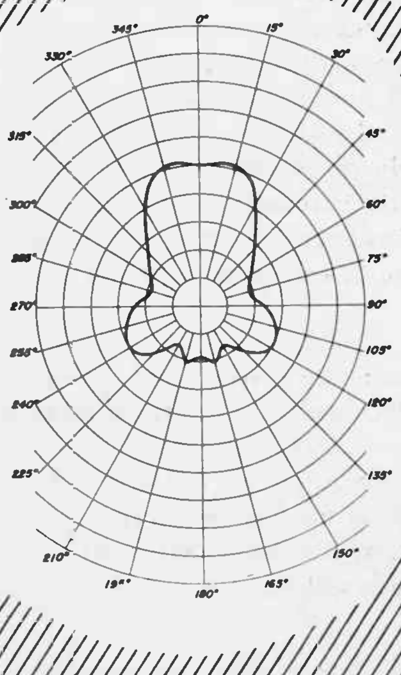

Lesson 11

GENERAL CONSIDERATIONS

11-1. By this time you're probably getting pretty tired of antenna installation methods and practices. Nevertheless, it is necessary to cover such special information about installing antennas in fringe areas as will be of practical use in your work. Come now, open wide and swallow hard, this won't hurt a bit. Fringe area, suburbs, or midtown, the antenna still has the same basic job to do. It must intercept enough signal energy to provide good pictures. But in fringe areas, the difficulties in the way of good reception are different from those most prevalent in the other areas.

Fringe Area Conditions. – In fringe areas, the trouble is more likely to be weak signals than anything else, although interference can often add to the problem. It may seem odd at first thought that interference would still be a problem in fringe areas, where strong sources of noise and interference are so much less common than they usually are in midtown districts. A little thought will show why this is nevertheless the case. It is really the *relative* strength of interfering noise or signals as compared to the desired television signals that is important, rather than the actual strength of the disturbing signals. In fringe areas, the sources of noise and interference are likely to be considerably weaker and fewer than is the case in midtown districts. But the desired signals are *also* much weaker, which means that noise and interference can still be troublesome.

However, there are several other general considerations which are typical of fringe areas, that tend to help the situation. For one thing, since a fringe area is that part of the television coverage area generally so far from the transmitters that signals are weak, it's safe to say that the transmitting antennas will lie pretty generally in the same direction from the receiver location. This simplifies the orientation problem a lot, since the best signal orientation on any one station is pretty sure to give very nearly the best signals on the other active channels as well. This won't invariably be true, as you'll see later, but it is one condition pretty common to all fringe areas.

Prevailing Architecture. – Another general characteristic of typical fringe areas is the type of building architecture, and the spacing between structures. Most of the structures will be small dwellings or business buildings of not more than three or four stories at most, and they are likely to be located on separate plots of ground, with rather more space around each one than is the case even in suburban areas.

Trees and shrubbery may vary in your part of the country, but the spacing and size of buildings is likely to be fairly similar. There will of course be some small to medium size towns located in the fringe areas surrounding big metropolitan centers like Chicago and New York, and in such places buildings and noise conditions may approach what is normally found in the immediate suburbs of the city itself. However, these locations are already pretty familiar to you from Lesson 9, so we won't give them very much special attention here, except in respect to the noise and interference problems.

Effect of Power Lines and Weather. – Fringe areas also differ from suburban and midtown areas in the way power and phone lines are handled, and to some extent in the sort of weather hazards the outdoor part of the installation must resist. Power lines are usually run underground in the more heavily built up parts of large metropolitan areas. This type of construction is expensive, and in the outlying suburbs and the surrounding country, power lines are much more likely to be on overhead poles run along the streets and roads. Such lines can be the source of considerable noise in wet weather, particularly if one or more of the insulators is cracked or otherwise damaged. They can also act as reflectors and cause ghosts, or produce a "shadow" effect if they happen to be directly between the receiving antenna and the distant transmitters. Of course, they are also a hazard to you when you're erecting the antenna, if they are low enough or near enough to the place you're working. This is one point you *must* check carefully, if there's any way at all that any part of the antenna and mast assembly can come near the power line while you're doing the job, or later.

Telephone lines are not likely to be dangerous, but *don't just assume they aren't.* In most fringe areas (and in fact, in many suburban areas) the phone lines are brought in overhead, just as the power line is, and you must take care not to damage it, or to run any part of the television installation so near it that there is likely to be electrical coupling and interaction.

Grounding problems are usually easier to solve in fringe area installations, and grounding is likely to be more important in such places because of the lack of protection, such as the steel frames of large buildings provide in midtown and dense suburban districts. We'll cover this aspect of the installation problem more thoroughly when we come to making the actual installation.

Definition of "Fringe Area". – Right here we

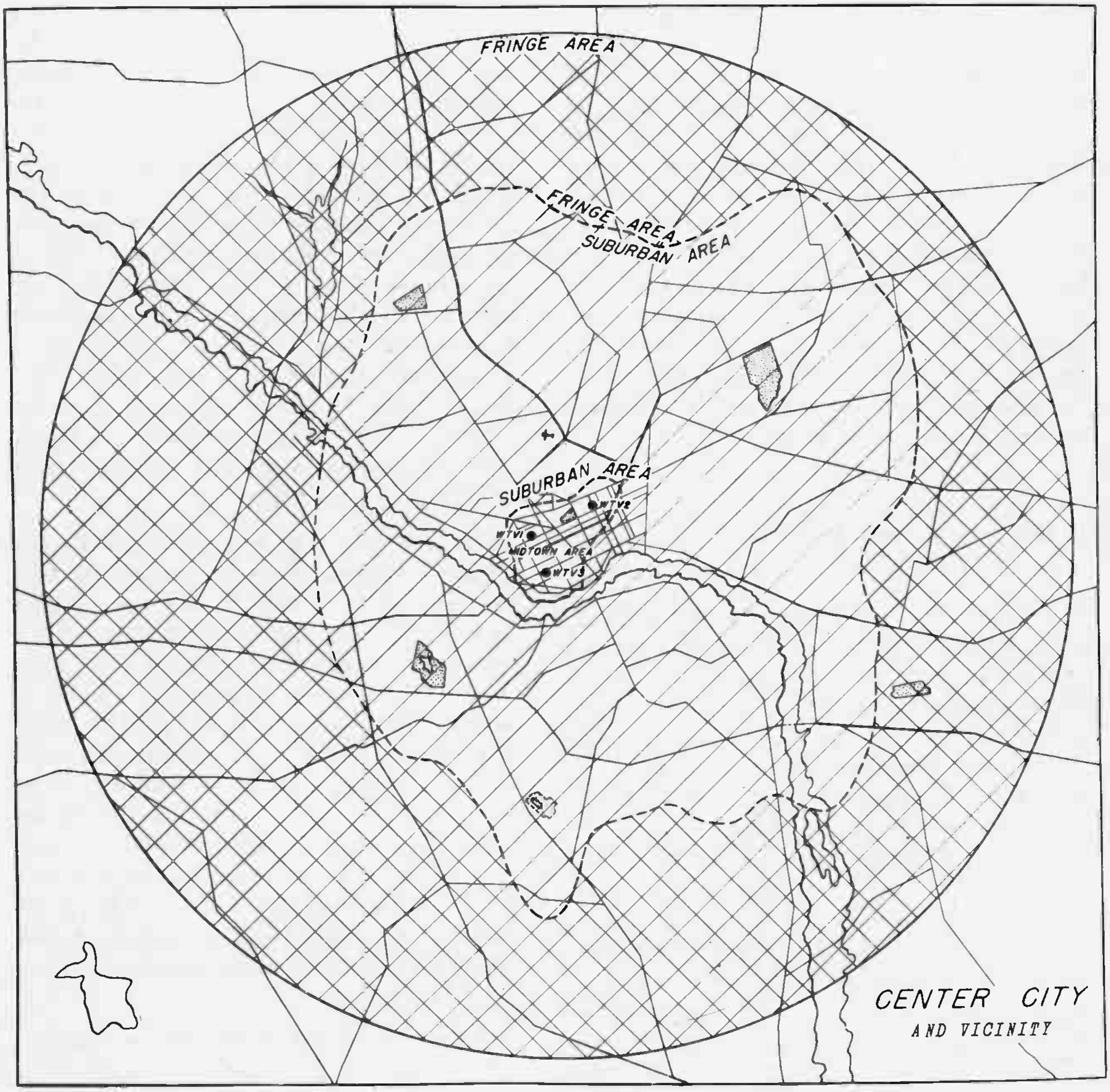

Fig. 11-1 Map of fringe area

may as well sum up the general conditions found in fringe areas, and restate our general definition for such regions in the television coverage area. *A fringe area is considered to be the outlying part of the whole general area reached by television signals from a given city or metropolitan center, where signals are so weak as to require the use of high gain antennas, or masts taller than the standard single length, or both.* Signals from all active channels are likely to range from medium strength to very weak. The transmitting antennas will usually lie in one direction as seen from the receiving antenna. Buildings will be mostly small to medium dwelling houses and apartments or business structures, more widely spaced than in suburban or midtown areas. Power and phone lines will usually be run overhead, and there will be less noise and interference in most locations. Weather hazards will be a little more severe than in the more built up suburban and midtown areas. And maybe before leaving these general considerations, it's worth mentioning what should be pretty obvious; that most of the jobs will be a lot further from the location of your service shop than is the case in other areas. This is worth remembering when you're checking the stock of parts in the truck, or your supply of lunch, for that matter.

PLANNING THE INSTALLATION

11-2. Just as in the midtown and suburban areas, there will undoubtedly be *some* information available about the particular part of the territory where any installation job is to be done, unless it happens to be the very first one in that region. Your supervisor may have such information, or it may be circulated through your regular shop talk and discussions; and some branch offices even post a map, with notations of specific local conditions marked on it. Such information is well worth picking up when it is available, as it may give you a fair advance idea of any special problem likely to be found on that particular job. This in turn may tip you off to any extra materials or tools you may require. Just as an example, if by checking the address with a map or common shop talk knowledge of the region, you know the place is right on the ocean front, you may as well go prepared to make the installation proof against salt spray hazards, because this is almost sure to be a problem.

Don't forget also that in some parts of fringe areas, installation men out on their jobs may not be conveniently close to the corner lunch counter, drug store, and gas station, as is the case in midtown and suburbs.

Going to the Job. – On your way to the particular job you have been assigned to, you can also pick up some useful information, particularly as you approach the actual neighborhood. If there are other television antennas in sight on buildings, you can easily keep track of the general orientation direction, and also get an idea of what sort of antenna and mast may be needed. For example, if you're getting close, and find yourself getting down into a valley or hollow, it's likely you'll find most of the installations using high gain antennas and extra-tall masts. This is true because signals are usually weaker in such depressions in the terrain, even if they are closer to the transmitting antennas than some other parts of the territory your local shop serves. You can probably save yourself some time by getting a tall mast ready right at the start, and picking a suitable mounting spot for it, with due regard for guying requirements, etc.

You can also keep your eyes open for any possible sources of noise or interference, such as a busy highway with its inevitable ignition noise, or electric railway tracks, power lines, and similar things. It may even be worth while to note the condition of trees and see if they show any really strong prevailing wind condition, if your area is in a part of the country where such weather hazards are serious. Small bits of information picked up in this way may not be important in themselves, but occasionally they add up to save you an hour's work, or even a mistake that results in a call-back. Since it takes practically no time at all to pick up such information, you're bound to come out ahead in the long run.

What to Find Out on the Job. – When you arrive at your fringe area installation job, there are of course a good many items of information you need to get, either from the customer or by your own observation. However, these won't be exactly the same as the facts you'd pick up in, say, a midtown installation. For one thing, there's not much point in even thinking about the internal antenna, or an indoor antenna, either. In fringe areas these antennas just can't provide enough signal, so you can give your attention to other matters. Find out if the set is in perfect condition as soon as you can, of course. This applies in *any* area, as you obviously can't complete an installation with an inoperative receiver.

Find out where the set is to go, not forgetting the matters covered in previous lessons, such as too much light on the tube face, etc. Check whether the customer will want to move the set to another room part of the year, and explain to him about the limitations in running the transmission line, and any other points which in your judgement will affect his choice of a place for the set, and his satisfaction with it after it is installed there. This seems a small matter, but it has an important effect in leaving the customer happy, and reducing the number of "nuisance" call-backs.

From here on, you'll have to find out much of the information you need by examining the building and its surroundings outside, as the customer naturally doesn't have the technical knowledge needed, nor is it his responsibility.

Choosing the Best Place for the Antenna. – When you know where the set is to go, you can keep a mental picture of the room and its relation to the rest of the building, and get outside to see what places are available for mounting the antenna mast, and which routing is most practicable for the transmission line. In fringe areas it is usually advisable to take full advantage of the height that can be gained by mounting the antenna mast on the highest practicable part of the building. You'll have to balance the probable improvement in signal strength against the convenience (if any) of using a lower mounting spot, keeping in mind your estimate of the probable signal strength, and such other factors as guying, etc. Check up on the condition of the roof or any other part of the building you're considering for the antenna mount, and also remember you've got to work a good deal around the mounting location.

You're more likely to find yourself working on buildings with peaked or slanted roofs in fringe areas than in midtown or suburban locations, and these require more care to avoid falls, dropped tools, or roof or other property damage. In particular, you must be watchful for peaked roofs that have loose shingles, and for shaky chimneys and insecure rain gutters and flashing. Such conditions are somewhat more prevalent in fringe areas, and they can cause serious accidents, or result in big bills for roof damage and suchlike later. Its up to you to decide what is safe and what isn't, but don't hesitate to ask the customer questions if you are in doubt on any point he can explain to you.

In fringe areas, it isn't likely that one point on the roof or upper part of a building will provide a stronger signal than another part at the same height, so you can concentrate more on choosing the highest point practicable, if you feel pretty sure you're going to need all the signal you can get. Even in fringe areas of course, there are locations where signal strength is sufficient on all channels to make installation relatively simple. You should have some idea of how much signal you're going to find if there are other installations nearby, as you can see how high they are placed and what antennas are in use. If you're *not* pretty sure signals are going to be usable without getting the antenna up high, better pick the highest practicable spot to mount the mast, even if it isn't very convenient to reach. You'll come out ahead on the time expended in the long run.

Transmission Line Routing. – With the best spot for the antenna mount selected, you should also have some idea of how you're going to route the transmission line, if you've kept in mind the location of the room where the receiver is located. You can spot each individual stand-off later, but do think ahead enough to have a rough idea of where they're to go. In general, the line run should not be longer than necessary to reach the set, but that does not mean you should use the shortest possible length of line that can be made to reach. Instead, roughly plan your line run to avoid possible abrasion and breakage hazards from tree branches, children's swings or other play equipment, domestic animals, etc. If you

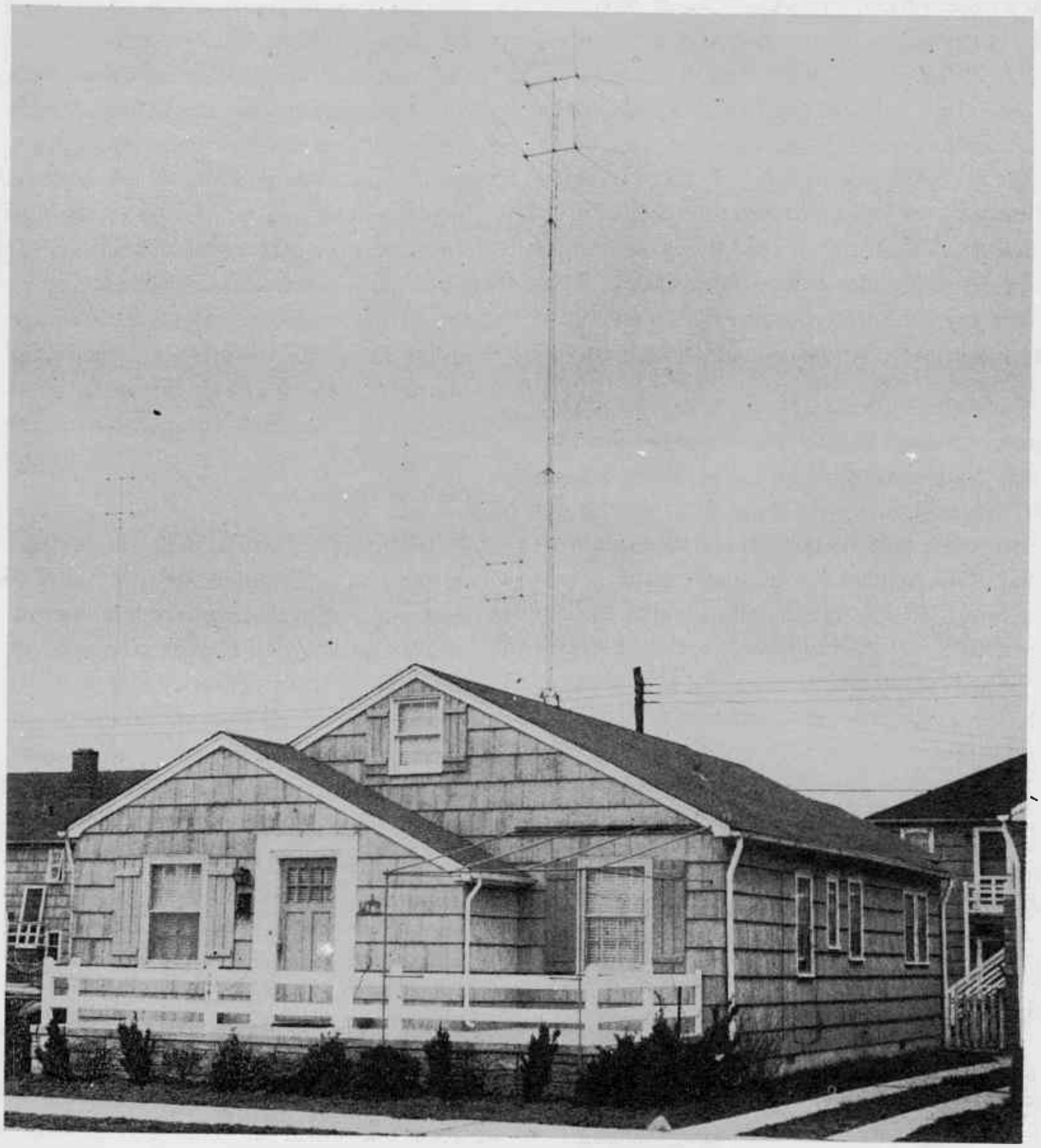

Fig. 11-2 Fringe area installation

can't see for yourself just what hazards of this sort exist, don't hesitate to ask the customer about them. You're not being nosey, but merely protecting his interests and yours, too. Incidentally, people living in fringe areas are far more likely to have domestic animals or pets that may damage a transmission line if it is routed so that they can reach it, than are the residents of other areas.

Another point in sizing up possible transmission line runs is the question of signal pickup on the line, and noise and interference. In general, it's better to keep as much of the line vertical as you can, and try particularly to avoid having to run the higher part of the line horizontal. If you must make a sizeable part of the line up near the mount run horizontally, try to keep it from being exactly broadside on to the direction of the transmitting antennas (parallel to the dipole rods of the antenna). In fringe areas, it is more important to keep pickup of television signal energy in the transmission line at a minimum, as this can cause partial cancellation of the desired signal, which may already be pretty weak.

Also, horizontal line runs seem more susceptible to picking up ignition and power line noise, particularly if the horizontal part is up high. Putting the proper twists in the line between stand-offs helps, particularly if care is taken to make them all in the same direction. In fact, its probably a little better in fringe areas to increase the number of twists. This not only minimizes pickup of unwanted noise and signals in the line, but makes it behave better in strong winds as well.

You learned in earlier lessons the importance of good appearance in transmission line installations, so a reminder here ought to be sufficient.

There is also the matter of a place to ground the mast. In fringe areas, a television antenna will often be the highest thing for quite some distance around, and for this reason the risk of a lightning stroke or a heavy static charge is considerably greater than is the case in suburban and midtown areas. Fortunately, it is also somewhat easier to make a fairly good ground connection on many fringe area installations, either by running the ground wire to a part of the cold water system, or to a ground stake driven near the wall of the building.

At present, the part of the National Electrical Code of the Fire Underwriters dealing with grounding is under study, and it is probable that some revision of the legal requirements will be made. In any event, television installations will have to comply with local codes and building regulations, and you should definitely have the latest information as to what is proper in your area. Be sure *you* get the correct information, because violations can be serious if they result in damage later.

SELECTING THE ANTENNA

11-3. When it comes to picking the right antenna to do the job in a fringe area, the choice is narrowed down right at the start by the limited signal strength, in most cases. Chances are you'll need to start off with at least a high-low antenna and harness, even in the most favorable locations. In many cases of course, your knowledge will indicate that it's advisable to go either to the stacked conical type, or to the stacked in-line type antenna, to have a reasonable chance of success. Here are the types of antennas you will probably use most often in real fringe area installations.

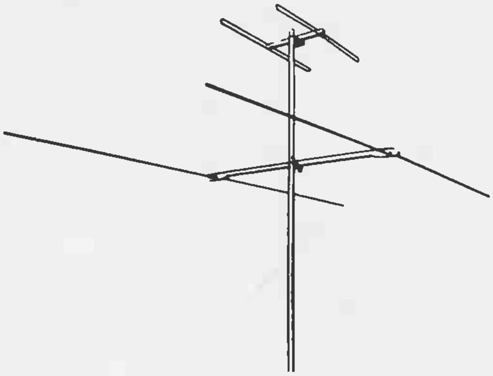

Fig. 11-3 (a) High-Low combination antenna

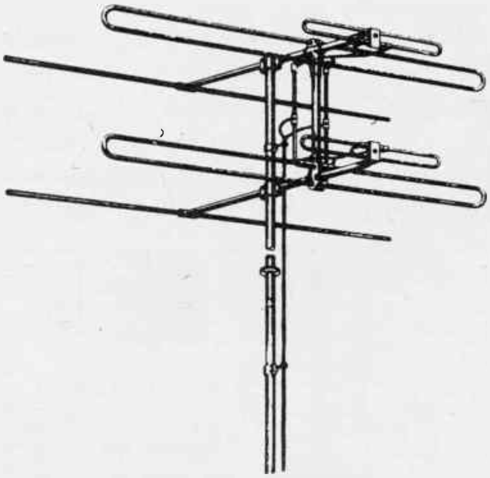

Fig. 11-3 (b) Stacked In-Line antenna

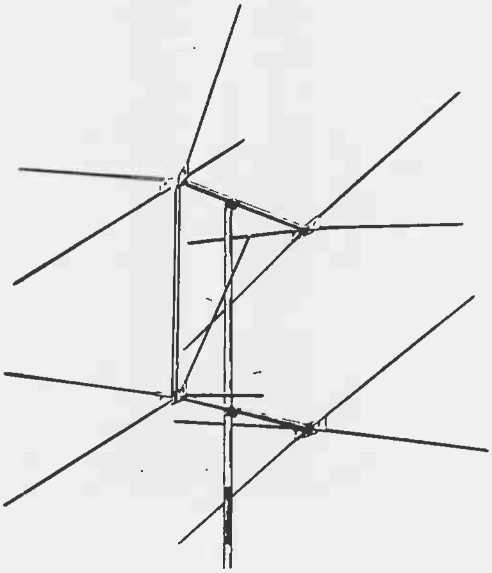

Fig. 11-3 (c) Stacked conical antenna

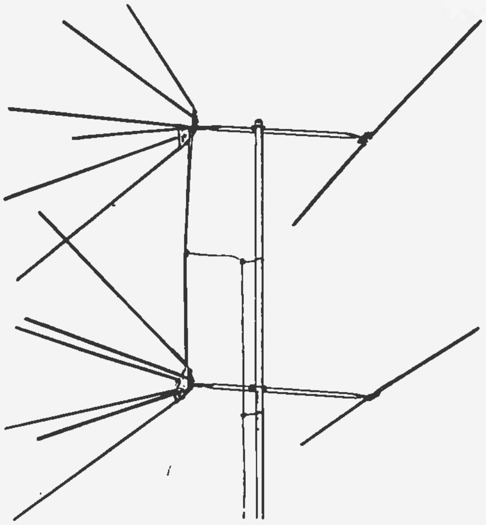

Fig. 11-3 (d) Stacked modified conical antenna

All of them intercept considerably more signal energy than the simple dipole and reflector, or dipole and reflector with wings and high frequency reflector. However, there are very considerable differences between the performance of these three antennas, and also in their cost, so we'll cover their characteristics in some detail here. A working knowledge of the performance of each will be very helpful to you, particularly in deciding which antenna to use on any particular job.

Antenna Cost. – First of all, consider the relative costs. The stacked in-line antenna costs almost three times as much as the high-low, and the stacked conical antenna almost four times as much. This doesn't mean you should make desperate efforts to convince the customer he doesn't need the more costly antenna, if it really *is* needed in a given installation. It *does* mean you should give the high-low a fair trial at a good mast height, when conditions indicate to you that it has a good chance of doing the job. If it does give satisfactory reception, well and good. If it's only fair, better not waste time, but try one of the others.

You'll understand better how the performance of these different antennas compares after studying the graphs of Fig. 11-4, and the polar diagrams that follow.

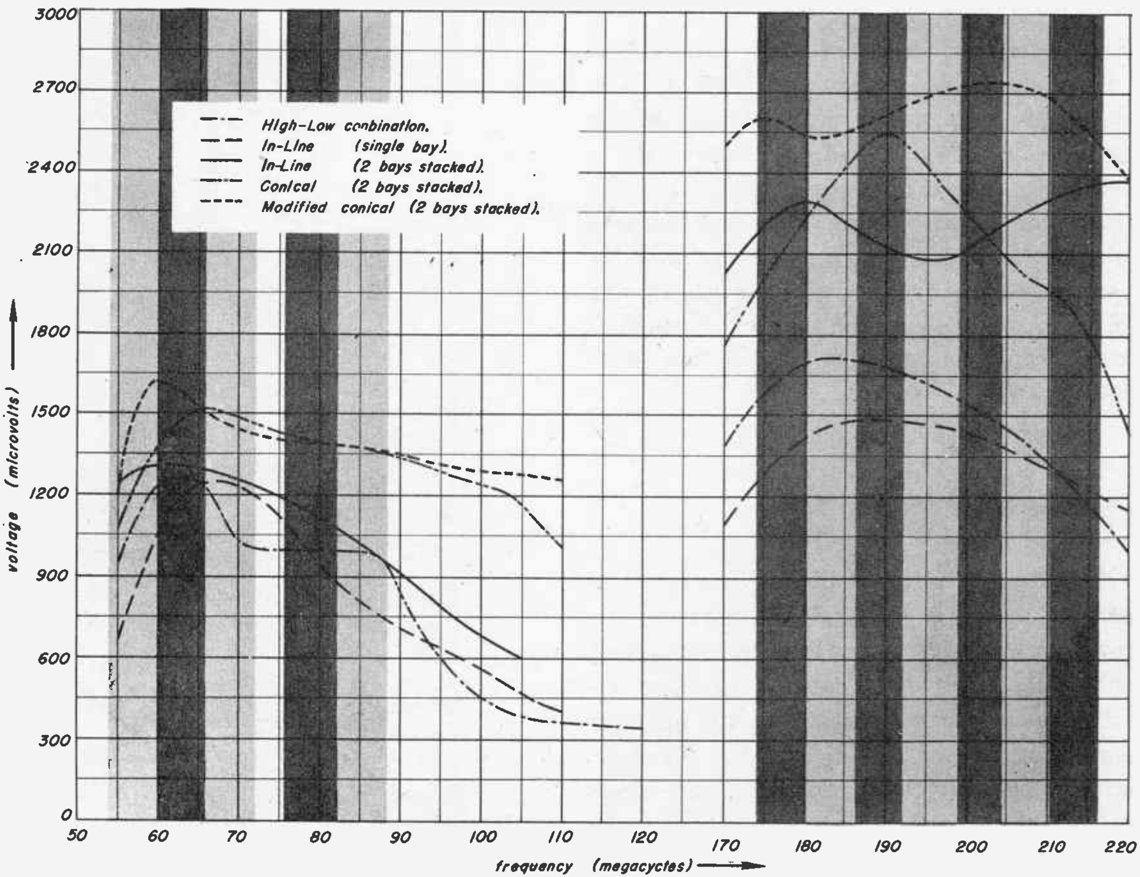

Fig. 11-4 Relative response of fringe area antennas, in microvolts. Typical values are assumed for a fringe area, but keep in mind the fact that these will vary for different locations.

This graph shows the output voltage of several types of antennas for each channel, as measured at a typical fringe area location. As you can see, the stacked conical type, and the modified stacked conical with single dipole reflectors give the most output on the low band, and are about equal. The stacked in-line type is next best for signal strength, and the high-low is poorest. On the high band, the modified stacked conical has definitely more gain than any of the others plotted. On Channels 7, 12, and 13, the stacked in-line type is next best for signal strength, with the stacked conical coming up to second best on Channels 8, 9, 10, and 11. Again, the high-low provides the least signal strength of the antennas plotted.

This does *not* necessarily mean that the high-low isn't usable in some fringe area locations. *If* the signal strength on the active channels is known to be good in that particular neighborhood, the high-low may do the job satisfactorily. However, when signals are on the weak side, one of the stacked types is likely to be required. We'll go into *all* the factors influencing choice of the antenna as soon as we cover the second important operating characteristic of the types under consideration.

Antenna Directivity Pattern. – This characteristic is the directivity pattern, which you learned about in Lesson 6, and elsewhere in this Course. A good working understanding of the directivity of each of these three antenna types will be very useful in fringe area installations, particularly when any serious noise and interference sources are known to exist nearby. This is true because as stated before, it is the *relative* strength of desired signal and interfering noise or signals that determines whether reception is satisfactory. Remembering this, it is often possible to choose the antenna type whose directivity pattern gives the best relative desired signal strength with reference to the interference. Study of the polar diagrams of all three antennas drawn to the same voltage scale and superimposed on each other will show quickly which one will give the most favorable ratio between the desired signal and a noise or interference source located in a given direction.

As an example, consider the situation shown in Fig. 11-5.

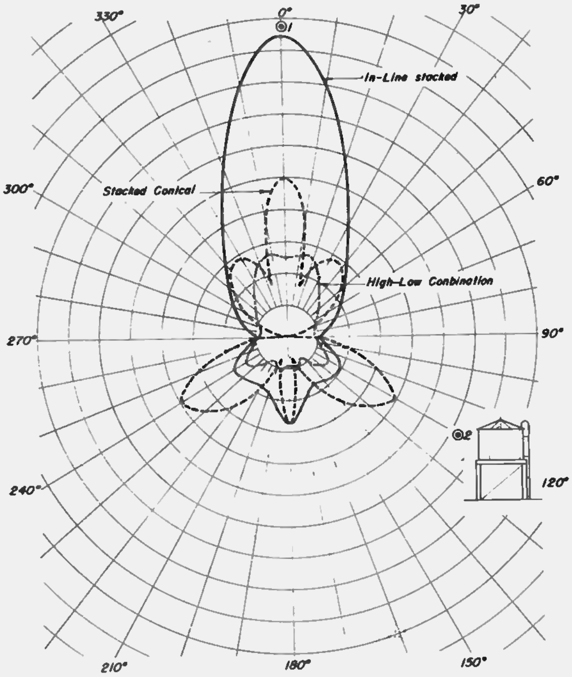

Fig. 11-5

This shows the Channel 13 directivity patterns of the three antennas superimposed on a fringe area receiving location. The main lobe giving maximum output voltage is oriented on the transmitting antenna, shown at point 1. There is a large water tank at point 2, which reflects a considerable amount of signal energy toward the location of the receiving antenna, which is of course the center of the polar diagram. It is easy to see that the stacked in-line antenna will give the greatest ratio of direct signal energy to reflected signal energy in this case.

Obviously, examples of every conceivable receiving problem of this sort can't be presented in a single lesson, or a dozen lessons, for that matter. However, by studying the polar diagrams of the single bay In-Line, stacked conical, and High-Low combination antennas shown in Figs. 11-6 to 11-8, you can learn how their performance compares on each channel, and apply this knowledge to solve any specific problem you encounter. The polar diagrams for these three antenna types are plotted for Channels 2, 4, 6, 7, 11, and 13.

The polar diagrams for Channels 3, 5, 8, 9, 10, and 12 will show patterns roughly midway between those given here. A good general memory of the way these patterns compare, and how they vary

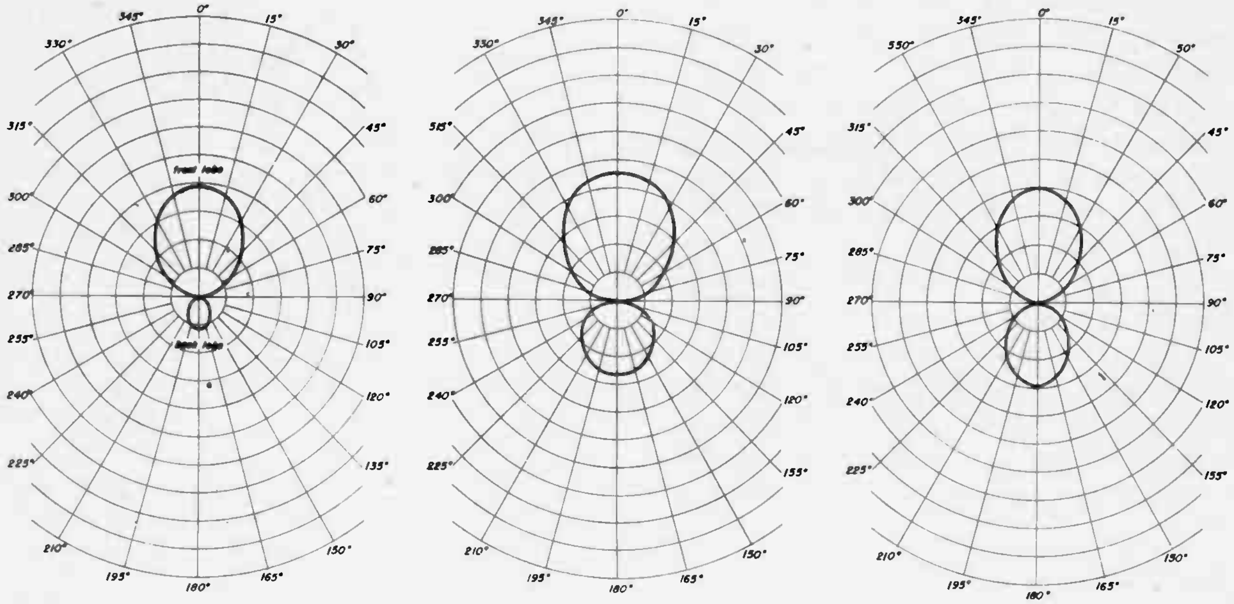

Channel 2 Channel 4 Channel 6

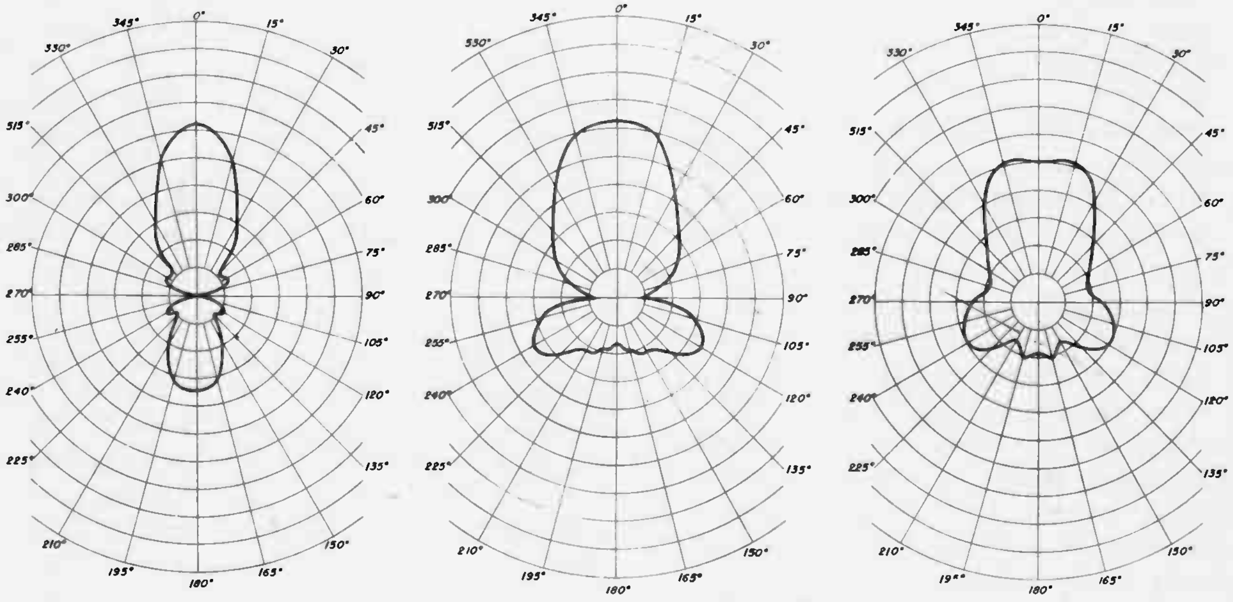

Channel 7 Channel 11 Channel 13

Fig. 11-6 High-Low combination antenna polar patterns

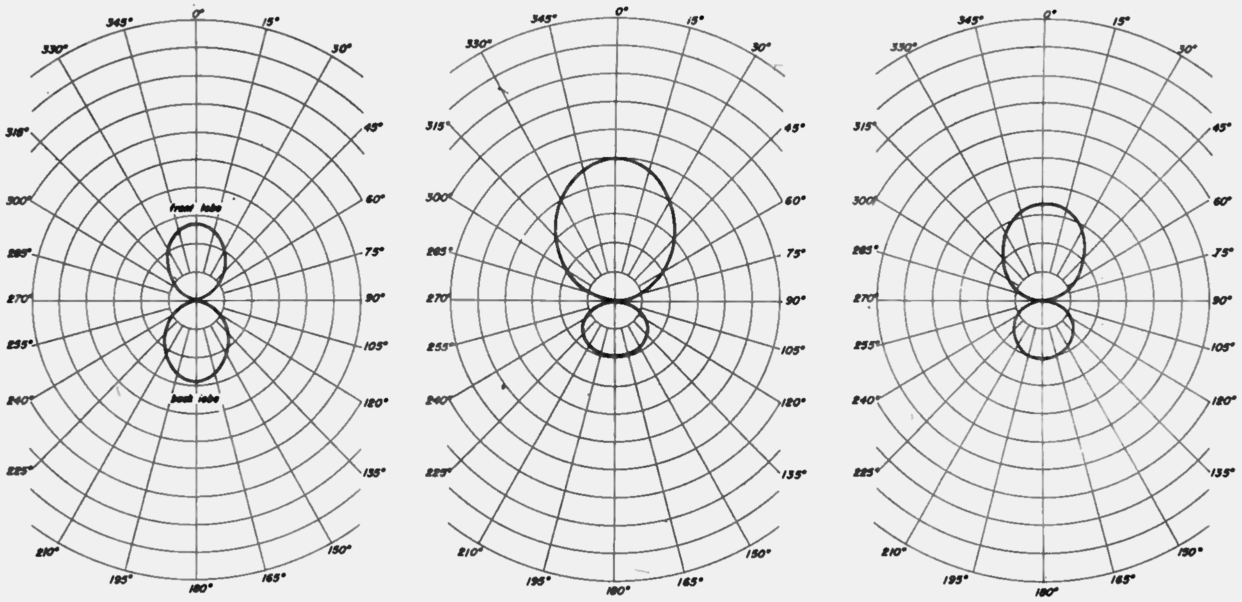

Channel 2

Channel 4

Channel 6

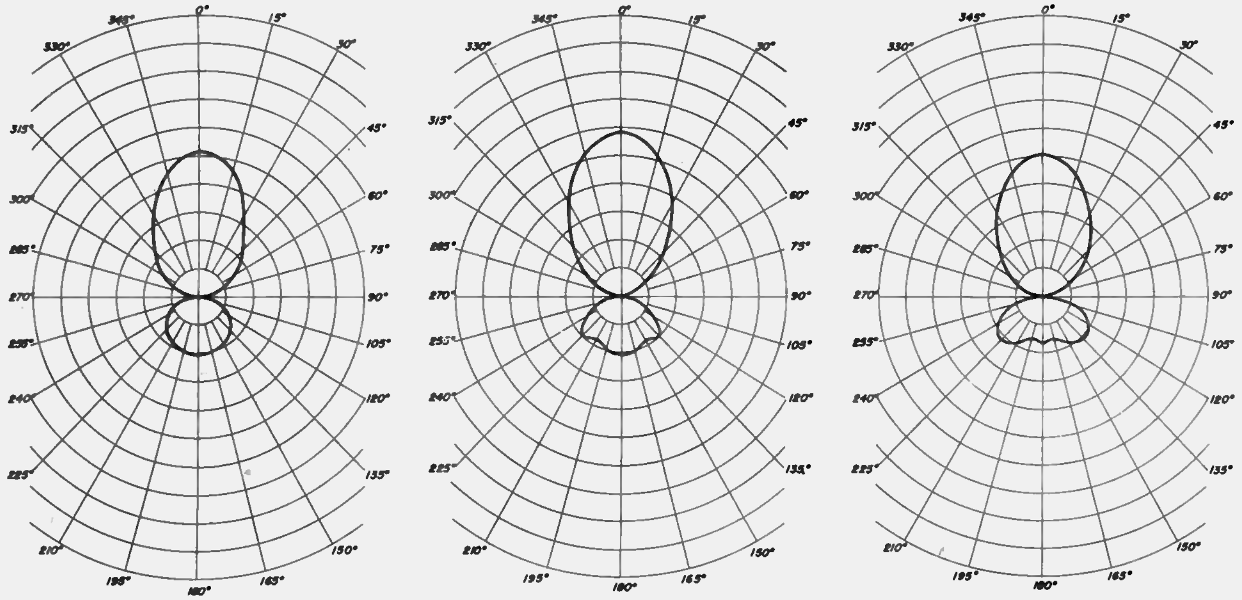

Channel 7

Channel 11

Channel 13

Fig. 11-7 Single bay In-Line antenna polar patterns.

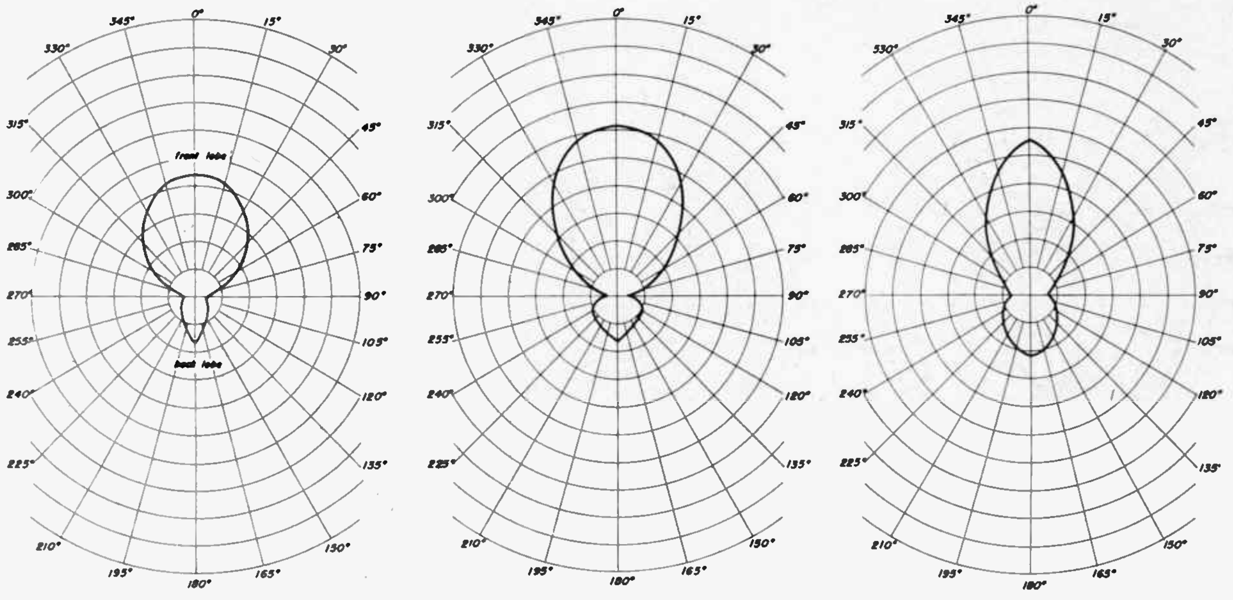

Channel 2

Channel 4

Channel 6

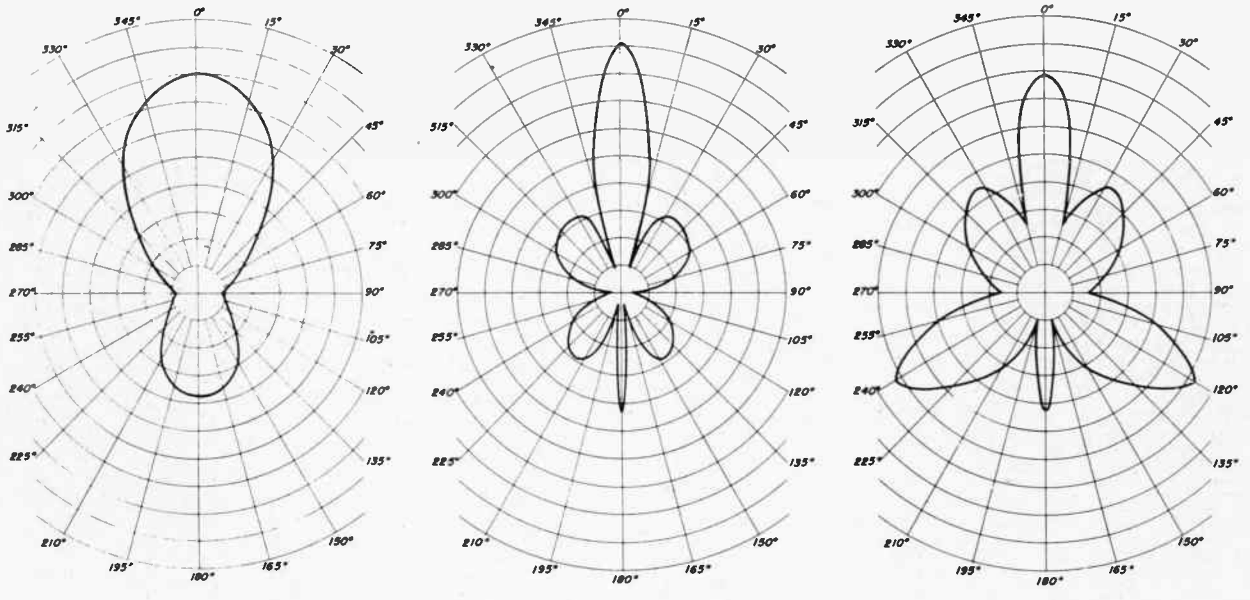

Channel 7

Channel 11

Channel 13

Fig. 11-8 Stacked (2-bay) conical antenna polar patterns from channel to channel will be of considerable help in knotty cases, particularly when there are several active channels in the area.

We have already seen how the relative strength of desired and undesired signal and/or noise affects the reception problem. In extreme fringe areas, the desired signals are often so weak that, even with a high gain antenna on a tall mast, there may be barely enough signal voltage at the receiver input to produce a satisfactory picture.

Internal Noise. – Even if there is no outside noise or interference source to cause trouble, there is always the limitation of the receiver's own internal noise. This noise level varies somewhat from set to set, but not usually enough to consider. The design of most receivers is such that the average noise level of the receiver itself is quite low. This means that good reception can be had in most television areas right out to the limit of the "C" zone, if you do a competent job of selecting and installing the antenna. However, even the best receiver has its limit, and that limit for good pictures is reached when the signal voltage that the transmission line delivers to the receiver input begins to approach the level of the receiver's internal noise voltages. This is an important point to remember in connection with choice of an antenna, as we shall see.

Suppose on your first try at a new location, you use a high-low antenna on a twelve foot mast. Let's say that Channels 2, 5, 7, 10, and 13 are active, and signals on all but Channel 2 are too weak to be usable, because of "snow" in the picture. You know that the snow is really the receiver's own noise voltage, which the signals on the other channels are too weak to overcome. Now the question is; will one of the higher gain antennas do the trick, or will it be necessary to use a taller mast. too? A little study of the relative output of the three antennas as shown in Fig. 11-4 and the polar diagrams will suggest strongly that it will be necessary to use both the highest gain antenna *and* a taller mast.

Why? Well, when the picture on most channels is pretty badly snowed under, it indicates that the signal level is down quite near the noise level. To produce a good, dependable picture, the signal voltage will have to be at least twice as great as the noise, and preferably somewhat higher than that. You can see from the signal strength graph of Fig. 11-4 that merely using the higher gain stacked conical antenna will not quite double the signal strength. However, adding another mast section to give greater height will also bring the signal up considerably, except under very unusual circumstances, as we shall see later. The result will probably be that pictures will now be satisfactory on most of the active channels, and there may even be enough signal to assure good reception even when weather or seasonal conditions are unfavorable.

Effect of Weather Changes. – This brings up a fairly important point in connection with fringe area installations generally. Where signals are relatively weak, the effects of moderate changes of signal strength caused by changing weather conditions may be great enough to make reception unsatisfactory part of the time. Also, changes in the foliage of trees from winter to summer will have some effect, particularly if there are tall trees intervening between the receiving antenna and the transmitting antenna. These and other considerations make it highly desirable to get enough signal so that even under the worst possible combination of local conditions, there will still be satisfactory pictures. All of which means you should try for some *extra* signal strength to cover the loss during bad conditions, in order to prevent bad weather callbacks. It *does not* mean to always choose the highest gain antenna and put it on the tallest mast you can erect. But it *does* mean that when signal strength is just at or near the borderline of acceptability, you should do whatever you can to add enough more for a margin of safety.

Summary. – To sum things up, then, we can review the points that affect choice of an antenna for *any* installation, as first given in Lesson 9.

1. Owner's preference. In fringe areas, this point has little bearing, except in rare instances where the customer is dead set on a particular type. This situation requires patience and tact on your part, but usually a demonstration of the reception with the proper antenna for the job will settle the matter.
2. Signal levels actually present. You do not need to make a survey with the Survey Receiver, except when the job order specifically calls for one. Instead, you judge the *relative* signal level on each channel compared to the noise level of the customer's receiver, by noting the amount of snow in the

picture, if any. Your final selection of antenna type and mast height will have to take account of this information.

3. Noise and interference conditions. These factors also have considerable bearing on the antenna choice, even though both are likely to be less troublesome than in midtown areas. The paragraphs describing the directivity patterns of the various antennas will be useful here.
4. Ghosts. Ghost troubles are also much less serious in fringe areas, due to the relatively smaller number of possible sources of reflections, as compared to either midtown or suburban locations. However, they cannot be neglected entirely. Use of the appropriate antenna, and careful orientation to take full advantage of the antenna gain and directivity, will usually solve fringe area ghost problems satisfactorily.
5. Directions of the transmitter antennas. In fringe areas, the receiver is usually so far from the metropolitan center where the transmitters are located that they lie in substantially the same direction. However, in some cases where the transmitters are rather widely spaced, and the receiving location is not actually many miles from the metropolitan center, the directions may differ enough to make a difference. In such cases, the in-line antenna is often superior, because the broader nose of the main lobe in its directivity pattern permits orientation to a compromise direction which will give good signals from all stations, if signal strength is reasonably good.
6. The active channels. Even if only one or two channels in the low band are on the air, it is likely that signal strength requirements will make necessary one of the high gain antennas in many cases. However, the difference in performance of the two stacked antennas on Channels 6 and 13 may have some bearing on your choice.
7. Relative cost. In general, the same principle is applied in fringe areas as in midtown or suburban locations. That is, use the least costly antenna that will provide good, reliable reception under the year 'round weather conditions known to prevail in the area. However, in fringe areas it is best to allow a reasonable margin of signal strength for "insurance".

Locations Between Two Transmitters. – Before leaving the question of antenna selection, it is necessary to mention a type of special antenna that is sometimes required in unusual fringe installation. If a receiving location is about midway between two metropolitan areas, both of which have several active channels, it may be necessary to use a special Brown lobe switching antenna and diplexer. This antenna consists of four dipoles with wings.

This antenna is so designed that by a switching arrangement at the diplexer unit it is possible to reverse the directivity pattern of the antenna, thus receiving stations from either direction, assuming the transmitters lie in relatively opposite directions. Also, the front-to-back ratio of this antenna is very high, as you can see in the polar diagram of Fig. 11-10.

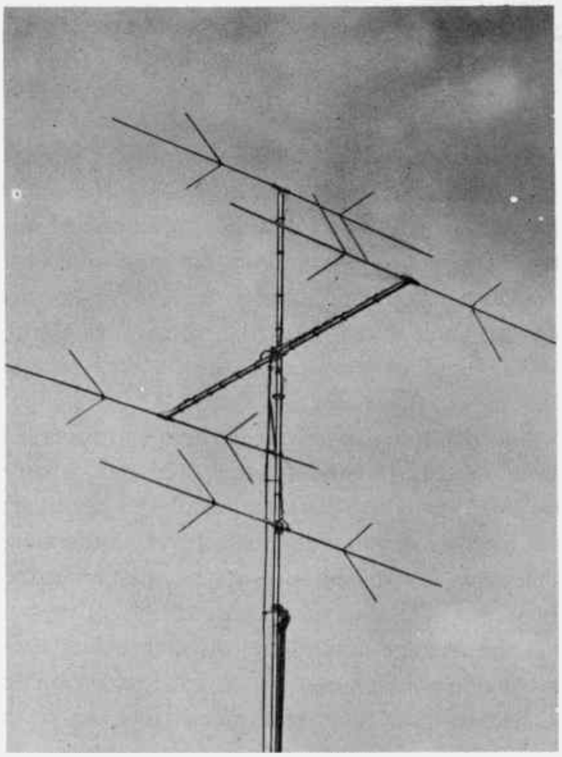

Fig. 11-9 Lobe switching antenna

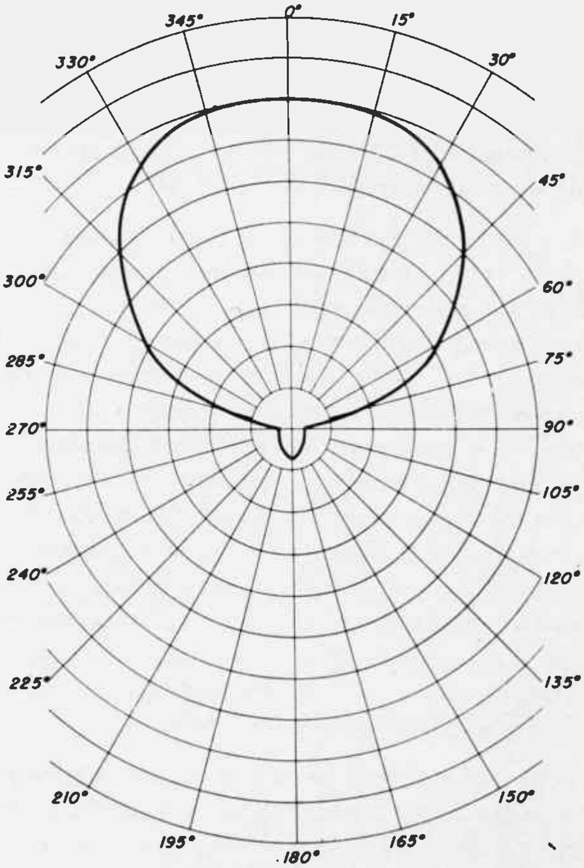

Fig. 11-10
Lobe switching antenna polar pattern (Channel 6)

This helps greatly in preventing co-channel or adjacent channel interference when stations in the two cities concerned are so assigned as to make such effects possible. However, the number of receiving locations requiring such an antenna system is quite small, since the antenna is especially designed for use in areas remote from and between stations on the same channel.

Multiple Antennas. – Another type of installation usually regarded as special because of the extra material and labor required is the sort where two or more separate antennas are used. Such installations are sometimes used when stations must be received from more than one general direction. In practical work, the antennas are oriented to provide the desired reception from the various directions. Separate transmission lines are run to the receiver, where a switch is provided so that the customer can select the desired antenna at will. There is also a kit of parts which can be added to the regular receiver channel selector switch, to accomplish this antenna switching operation automatically. This system is more completely described in the treatment of special installations in Lesson 12.

There is another way in which this problem of reception from several directions can be handled. This is by use of one of the high gain antenna arrays mounted on a rotator mechanism, with a control box at the receiver so the customer can point the antenna in the proper direction. Lesson 12 also covers this sort of installation.

TRIAL PLACEMENT AND ORIENTATION

11-4. Signal strength problems and the structure of most buildings in fringe areas rather limit the choice of mounting places to one or two. It is usually necessary or advisable to pick the mounting spot that will get the antenna up highest, with reasonable regard for other factors, such as anchorages, guying requirements, obstructions, etc. Fortunately, the signal strength will not usually show much variation at any spot on the roof, if the antenna is at about the same height. This is so because the number of good conductors nearby to act as reflectors is very much less than is the case in midtown or suburban locations. However, in this connection the effects of power and telephone lines are worth some consideration.

Avoiding Reflections from Power Lines. – Tests have shown that overhead power lines having several conductors can have a serious effect on television signals, if the lines are somewhere near broadside position to the arriving signals, and either ahead of or behind the receiving antenna, as seen from the transmitter. This is just as true of telephone pole lines which carry several sets of wires. Differences in signal strength of as much as three to one have been observed at some locations because of these factors. The remedy is to locate the antenna as far from such groups of reflecting conductors as can conveniently be done, and to try to get the antenna above the level of the power or phone wires, if possible.

This will not be possible in every case, but even an increase of a foot or two will make quite a difference, particularly when the distance between the antenna and the conductors concerned is not more than 20 or 30 feet.

Deciding on Antenna Height. – With the most suitable spot for the antenna selected, the antenna chosen for the first try can be put up, using a mast height which seems appropriate to the location. Your observation of other antennas and knowledge of signal strength in the area will help you here also. Be sure to get the transmission line pretty nearly along the route it will actually follow when you complete the installation, because changing it may have quite a large effect on signal strength, even if it is properly handled. This does not apply very much to Twinex or coaxial lines, but you will not find that the use of such lines is justified in a very large percentage of fringe area locations.

Orientation. – Orientation in fringe areas almost always is simply a matter of swinging the antenna slowly across the direction of maximum signal output a couple of times, and settling it on the best direction. This is because most of the transmitters lie in the same general direction, as mentioned earlier. However, in some cases, local interference or noise problems may require swinging off the strongest signal direction slightly, in order to reduce the offending noise or signal. Even where nothing like that is encountered, however, you may find it advisable to check very carefully whether the high band stations are correctly oriented.

The antenna directivity of all three types is somewhat sharper on the upper channels, and the high band stations are often weaker at fringe area distances, too. In such a situation, it is obviously better to orient carefully on the weakest high band stations, as any small difference on the low channels will not usually be very serious.

Suppressing Ghosts and Interference. – With the trial orientation done, compare picture quality on all active channels, and decide whether it is satisfactory, or whether a taller mast, higher gain antenna, or both will be required. In a good many cases, your first choice will settle the matter, particularly after you have gained some field experience. However, there will be jobs where the appearance of bad ghosts, interference, or weak signals makes it necessary to take strong measures. It will help if you can locate the direction of the source of the ghost or interfering signal. This can sometimes be done by carefully orienting the antenna so the *least* signal is received from the source of noise or interference. This means you have the offending signal source in one of the nulls of the antenna, and the two deepest nulls in the directivity pattern will be practically at right angles to the crossarm, or to say it another way, just about straight along the axis of the antenna dipole.

With this direction found, you can sometimes take advantage of differences between the directivity patterns of the three antennas, so as to get a better ratio of desired to undesired signal voltage. After selecting the best antenna for the particular situation, make another effort to minimize the trouble, while still keeping good signal strength on the active channels. If there is still trouble, it may help to put the antenna still higher, even if this means adding another mast section.

This is true because increasing the antenna height will usually cause the signal strength from the distant transmitters to rise faster than the signal from the local source of noise or interference, or the reflected signal energy causing the ghost. Naturally, you should be sure the receiver is not at fault, as a slightly defective receiver might easily cause a lot of wasted time, if the trouble was diagnosed as being outside.

Incidentally, if the noise or interference doesn't seem to come from any clearly defined direction, chances are it is right in the customer's home, or next door, or even coming in on the power or transmission line. We will cover ways to handle all these troubles more fully in Lesson 13. For now, the usual tests of removing the line from the receiver, changing orientation, and switching to other channels should be enough to handle most ordinary cases.

In most fringe area installations, it will not be necessary to try alternate antenna mounting spots. This is true because the signal will usually be rather uniform at any point on the roof of a single dwelling house or similar structure. However, in those places where business buildings having steel frames are fairly common, trying another place for the mast mount may help. If you follow the "try and see" procedure described for midtown locations, you'll readily learn which spot gives the best results, of course. In any event, the one-direction orientation helps to simplify the job, because there's no problem of trying to hit a compromise orientation that will balance the signals from the several channels, except in rare instances.

Owner Approval. – Lastly, the question of owner approval is not likely to be a problem in fringe area work. You can explain, if there is any question of using a particular spot for the mast mount, that the signal conditions require it, and usually this will settle the matter. If you're dealing with a really fussy customer who insists the antenna must be located on some particular part of the house or property, you may have to make a comparison of reception in both spots in order to convince him. In such cases, try to be both fair and tactful, and bear in mind that a customer who has been "high-pressured" into accepting a certain arrangement is almost certain to find some pretext later for having it changed, after he has had time to think it over. Remember that the greatest argument you have is the difference in the picture.

MAKING THE INSTALLATION

11-5. There really isn't much that can be said about making the actual installation, that hasn't been said in the two preceding lessons. Naturally you'll have to choose the mounting bracket or other fastenings for the mast that best suit the architecture of the building, the height of the mast, etc. There are a few points that apply more specifically to fringe areas than anywhere else, which can be included here. For one thing, more wooden frame houses and peaked roofs will usually be found. The wooden construction simplifies the stand-off placement and fastening, but the peaked roof is somewhat less favorable. If it is steeply sloped to shed snow, it will be hard to work on, because of the angle, and you had better use your safety rope put over the ridge and around some safe support. If you use the chimney for this, *make sure* the chimney itself is in safe condition to stand the strain first.

Choice of Mounting Method. – Mounting the antenna mast on the ridge *does* put the antenna up about as high as you can get it with a given length of mast. But this has certain disadvantages that may offset the small increase in signal strength. The Neilssen roof bracket used to support the mast in a ridge mounting must be fastened to boards that are in turn fastened to the roof with lag screws, and the mast must be properly guyed. This involves a good deal more labor, and also increases the risk of causing a leak. Even if you are careful about choosing good, solid anchorages for guys, and lag screws, and carefully tar all such spots, the risk of causing a leak is higher than with a chimney or wall mount. Because of this, and the extra time and labor required, it is usually better to choose one of the other mounting methods, even though you lose a foot or two of antenna height.

Probably the most commonly used mountings are on the chimney, using blocks and lead anchor bolts, or the chimney strap, or on an end wall of the house, using the angle brackets where necessary to clear the eaves. The end wall mounting also makes it easier running the ground wire and transmission line vertically, since the roof does not have to be crossed by the line.

Mast Grounding. – In the matter of grounding, the National Electrical Code is in process of some change at present, and you will have to keep advised regarding the latest regulations in your part of the country. Local building codes vary, but it is a good idea to keep in mind what was said earlier about the greater protection afforded by the many steel frame buildings in midtown and suburban areas. Particularly if the antenna installation is near to being the highest point in the immediate area, grounding is advisable, even though no regulation actually demands it. If you are in doubt, don't hesitate to check on this point.

Transmission Line Run. – In running the transmission line, follow all the rules of good practice given in the earlier lessons, bearing in mind that weather conditions are likely to be a little more severe in fringe areas than they are in the built-up part of a metropolitan area. This is because the large buildings and many heat-releasing industrial activities in a large city actually moderate the force of the wind, and affect the temperature somewhat. As an example, temperatures in the fringe areas surrounding New York City run about 8 to 12 degrees colder in winter than they do in the midtown part of that city. Also, wind velocities average from 10 to 14 miles per hour greater.

All the practices you have learned about clearing windows and doors, keeping the installation neat, proper twist between stand-offs and care to avoid abrasion or crushing of the line apply, of course. In fringe areas, you'll have more chances to make entry through basement window casings or similar places, and run the line across under the floors to the proper spot. Be sure your entry is waterproof, protected from abrasion, and with a proper drip loop.

Lightning Arrestor. – If you do have a run of transmission line in the basement, chances are you'll be able to get the arrestor directly on a cold water pipe or some other well grounded part of the plumbing. If the building has no basement, you can often get the arrestor on a water or steam line feeding a radiator in the room where the receiver is located. This is not as good as connecting to the cold water system, but can be used in a pinch, as such pipes are not usually so hot as to damage the arrestor. Still, it's a good idea to make sure the transmission line itself is held well away from contact with such a pipe, as the polyethylene is likely to be softened.

With the line run completed, it may be necessary to check the orientation again for best signal on all channels before you finally buckle the clamps down firmly on the mast. Sometimes moving the transmission line makes a difference in reception, and reorientation makes correct any small deficiencies that show up as a result. However, if most of the line run is vertical, and you've been careful about proper twisting, keeping away from copper flashing and other good conductors, etc., you shouldn't have much trouble from this source.

After your final check of the mechanical condition and electrical performance of the work, you can go ahead with demonstration of reception, customer instruction, and the other details that you learned in Lessons 9 and 10. These details are substantially the same as described for the other two areas, and we need not repeat them in detail here.

Will a Booster Help? – At this point in your job, the customer may bring up a question you will have to help settle. If reception on some channels is not perfect, he may want to know if a booster will help the situation. Here are some facts on which you can draw in talking the matter over with him.

There are several boosters on the market that will provide some help when the signals are just on the borderline of being satisfactory, but they will not clear up the picture on stations that are really down in the snow. Among these, there is usually little to choose. Your own knowledge of the problem will help determine what make or model is recommended to set owners in their district. Of course, there are many boosters that actually *injure* reception, for a reason that must be kept in mind. This is the matter of the width of the band of frequencies they will pass.

Essentially, all boosters are simply added stages of amplification meant to bring the signal up to a higher level before it is applied to the receiver. In order to provide any substantial benefit, they must pass the full video band of 6 megacycles, and they must provide a better signal-to-noise ratio than the receiver alone can give. This is not really very easy to do, which is why the improvement in picture quality with most boosters is small. It is worth repeating that added gain alone means little, if the problem is snow. In some cases of interfering signals at the edge of a channel, a booster will help remedy the condition by providing some added selectivity, but this is a rare condition, and will be treated more thoroughly later in the Course.

Some boosters are so poorly designed and constructed that they are somewhat regenerative, which increases the apparent gain, but has the effect of narrowing the bandwidth, with the result that the higher video frequencies are lost, and picture quality goes *down,* in spite of the increased gain.

In general, it is better to explain to the customer that a booster can at best give some improvement on channels already of fair quality, but cannot really make an unusable signal usable, except in very rare cases.

You can point out, however, that a good booster may be helpful. The booster is generally easy to attach, and trying one will determine definitely how useful it may be.

One other point in this connection is worth mentioning. Some television receiver chassis may have an internal adjustment in the input circuit which permits adapting them to weak signal signal areas, with some improvement in overall picture quality. These chassis will have the information in the service notes, and the change consists simply in removing a resistor from the r-f amplifier circuit. This has the effect of slightly narrowing the pass band, but at the same time giving an improved signal-to-noise ratio. The resulting improvement in the picture by reduction of snow more than makes up for the slight loss of high video frequencies caused by the changed bandwidth. If your customer has such a set, and some channels are badly snowed even when you have done all you can with antenna and orientation, making this adjustment may add enough to be worth while.

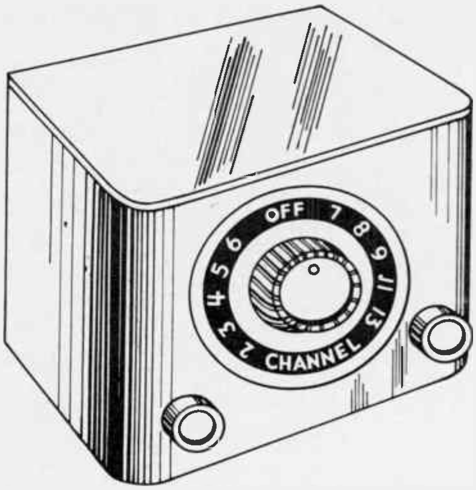

Fig. 11-11 Typical booster

FINAL CHECK AND DEMONSTRATION

11-6. This step is very much the same as for the midtown and suburban areas, and there is little to add to the material given in Lessons 9 and 10. You should be especially careful in demonstrating reception on the various active channels to point out any that are weak, because if this point is glossed over, it may result in a call-back later. Otherwise, procedure is straightforward and uncomplicated. Just take as much pains about your final cleanup and departure as you would in any other area, and all will be well.

◆

NOTES

NOTES

NOTES

NOTES

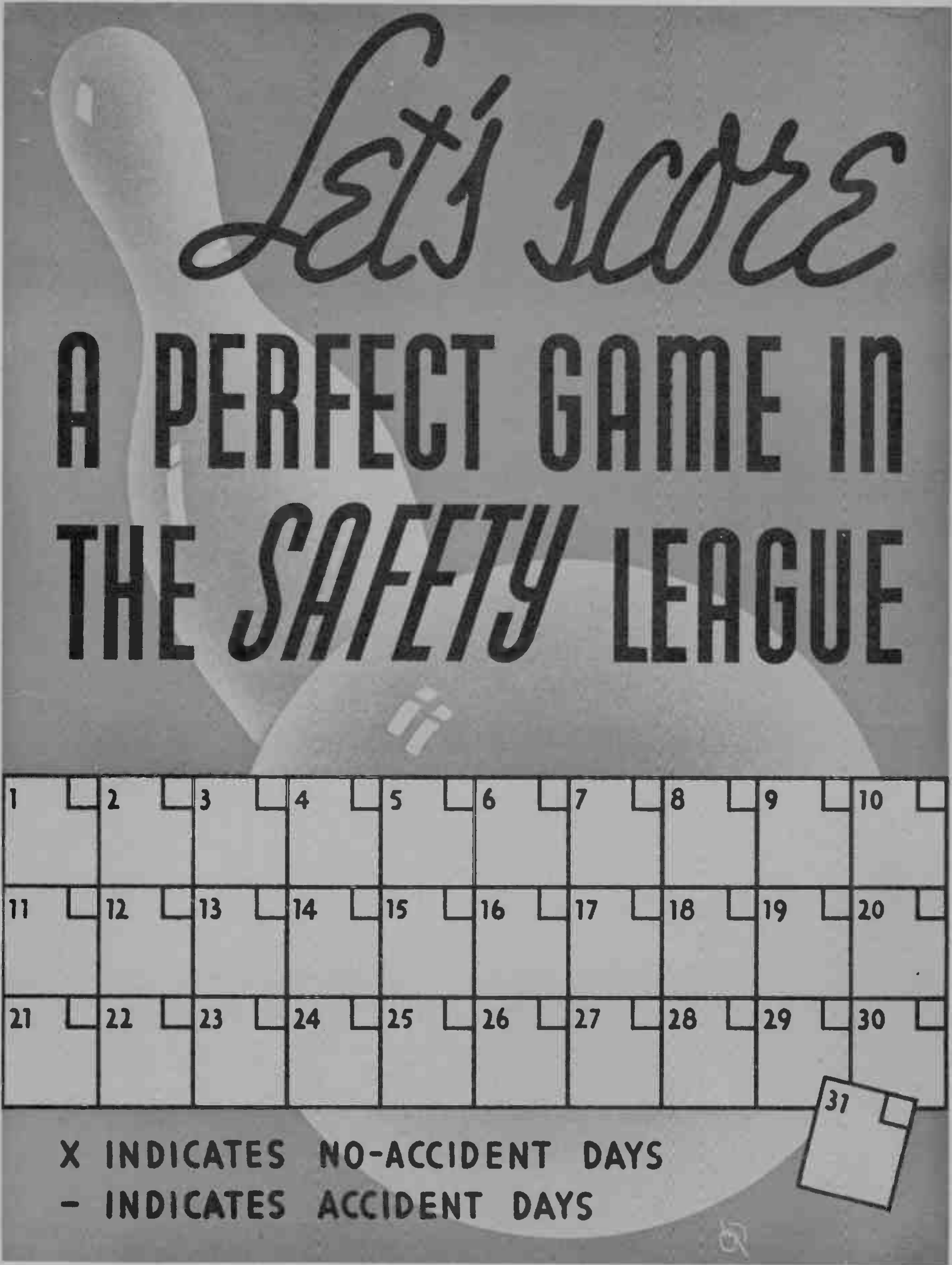

Let's score

A PERFECT GAME IN THE SAFETY LEAGUE

1	2	3	4	5	6	7	8	9	10
11	12	13	14	15	16	17	18	19	20
21	22	23	24	25	26	27	28	29	30

31

X INDICATES NO-ACCIDENT DAYS

– INDICATES ACCIDENT DAYS

NATIONAL SAFETY COUNCIL · CHICAGO · PRINTED IN U S A 6605

HOME STUDY
TELEVISION
SERVICING COURSE

PREPARED BY

RCA INSTITUTES, INC.

A SERVICE OF RADIO CORPORATION OF AMERICA

HOME STUDY DEPARTMENT
350 West 4th St., New York 14, N. Y.

UNIT THREE

Lesson 12: SPECIAL INSTALLATION PROBLEMS
Lesson 13: INTERFERENCE, NOISE AND GHOSTS
Lesson 14: PROJECTION TELEVISION RECEIVERS
Lesson 15: AUTOMATIC RECORD CHANGERS

TELEVISION SERVICING COURSE

PREPARED BY

RCA INSTITUTES, INC.

A SERVICE OF RADIO CORPORATION OF AMERICA

HOME STUDY DEPARTMENT
350 West 4th St., New York 14, N. Y.

LESSON TWELVE

SPECIAL INSTALLATION PROBLEMS

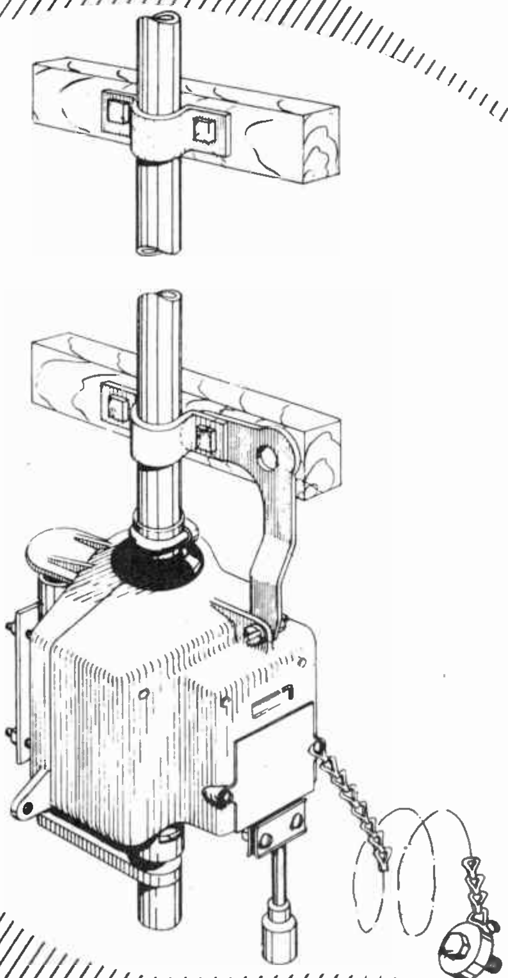

Lesson 12

WHEN IS AN INSTALLATION SPECIAL?

12-1. The owner of a television set who has a Service Contract is entitled to the best television reception that is possible at his particular location. However, to achieve the best possible reception may require more equipment and added service, over and above that furnished in a standard installation. Where such a condition exists, it is important that the customer understand the situation thoroughly. Where he can definitely be shown how additional equipment or an additional survey or other service can bring in a weak station or clear up annoying reflections, he will usually want those additions that make the installation *special.*

When Is a Special Installation Required? – A very practical question to ask at this point is: "When is a special installation necessary?" The answer to it is a little like the answer that Abraham Lincoln is said to have given to the question "How long should a man's legs be?" His answer, as you may have heard, was "Long enough to reach the ground." About the most definite answer to the question of when to recommend a special installation is: "Whenever a standard installation won't do the job". Whether the standard installation can be considered satisfactory depends partly on the customer, and partly on the means available for doing a better job. This second point will clear itself up as we examine the available means one at a time. In general, special installations may be required in (1) weak signal areas, (2) strong signal areas with unusually bad reflections; (3) locations where interference is unusually strong, (4) locations where the architecture presents special problems, (5) installations involving more than a single receiver, or where the customer's requirements are otherwise unusual.

What Distinguishes a Special Installation. – Psychologists say that the insane are just like the rest of us, only more so. Similarly, a special installation *problem* is pretty much like your regular day-to-day problems, only tougher. The distinction lies not so much in the problem, as in the means used to solve it. This brings us to the definitions of *standard* and *special* installations given in Lesson 5, which we might as well review now:

"*Standard Antenna Installation.* A *standard* antenna installation includes a single section of mast of standard length (at present this is not more than 12 ft.), an antenna consisting of a dipole, or dipole with reflector, a high frequency element, *(installed only where necessary,* for reception of established television transmitters within their normal service range), necessary mounting brackets, up to 100 feet of parallel wire transmission line, lightning arrestor, insulators and accessories."

"*Special Antenna Installations.* A *special* antenna installation is one or more of the following:

1. A mast taller than the standard (12 ft. at present).
2. A more complex antenna arrangement than the standard, such as:
   (a) One with an extra element or stacked array.
   (b) An extra mast and antenna.
3. A transmission line longer than 100 ft.(Twin Lead)
4. Elimination or reduction of interference radiations.
5. Special signal boosting amplifiers.
6. Modifications of building structure for supporting antenna or transmission line.
7. Special building construction permits. (It is the customer's responsibility to obtain such a permit where it is required.)
8. Installation of more than one receiver at any one location.
9. Any other variation from a *standard* installation."

In addition, we also have built-in antennas within the receiver, indoor antennas and window antenna installations. Window antenna installations and indoor installations, in which a twin lead dipole or folded dipole is permanently installed indoors, are considered as standard. Where a built-in antenna or a regular indoor antenna, such as the extended-V type, gives satisfactory reception with no installation problem involved beyond positioning the receiver and/or the indoor V-antenna, we have a classification in which the customer is usually entitled to a rate lower than the standard. However, in many of the above cases it is possible to encounter conditions in which weak signals or serious interference or reflection problems require the addition of materials and services that make the installation special.

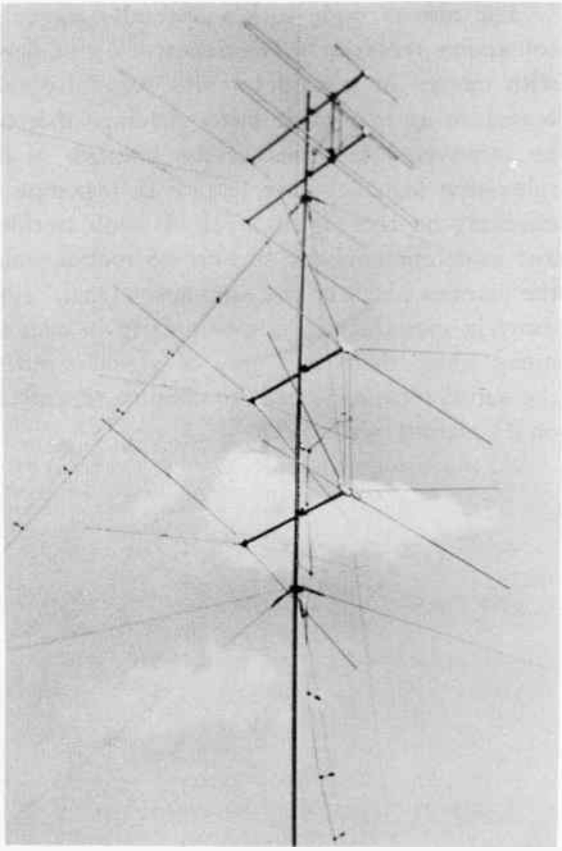

Fig. 12-1 A special installation

Convincing the Customer. – In most localities, as a result of surveys or previous installations in the neighborhood, the nature of the reception to be expected is known. You will usually know whether to expect a weak signal, serious reflections, a bad condition of local interference, or good clear reception. What is even more to the point, the customer will know that, too, if his neighbors have television. You have to meet the level of accepted local reception and, if possible, improve on it.

Where satisfactory reception can be obtained with a *standard* antenna installation, obviously, that is the thing to do. When there is any doubt about reception, the customer should be shown the best results that can be obtained with a standard installation. If that result is not satisfactory, then the improvements that can be obtained from a more comprehensive roof survey, the use of coaxial transmission line, the installation of two or more separate antennas, and other such *special* features must be explained.

The customer may feel that because his neighbors are content to tolerate interference or bad reflections or the inability to get certain stations, he, too, could let it go at that. But, when you are certain that the addition of special features will clear up or definitely improve the trouble, and can convince him of that fact, then you have made a sale. There is nothing more annoying than to continue to watch an imperfect television picture; and there is nothing that gives greater pleasure than to know that you are getting the best reception in your neighborhood.

MATERIAL FOR SPECIAL INSTALLATIONS

12-2. When a special installation is authorized by the customer, the distinction between such installation and a standard one is the additional or special materials used, and the added time spent on the job. That makes it necessary to keep a careful record of all materials used, and the time spent, so the customer will know exactly what he is paying for.

Many of the materials required in special installations have already been mentioned in the preceding lessons dealing with materials and installation procedures. However, it will prove helpful to pick out these materials, so that we can see just where they fit into a special installation.

Materials and equipment used in special installations are:

..... Survey receiver
..... Standard test antenna and transmission line
..... Conical TV antenna kit
..... In-line antenna
..... High frequency antenna
..... Harness for Hi-Lo antenna combination
..... Terminal block for above
..... Two bay conical antenna
..... Four bay conical antenna
..... Single bay conical antenna
..... Low channel antenna (VDX 2 to 6) – Economy line)
..... High channel antenna (VDX 7 to 13 – (Economy line)
..... Low channel antenna (VDX 2 to 6) – (Deluxe line)

..... High channel antenna (VDX 7 to 13) – (Deluxe line)
..... Rods for stacking low channel antenna (Economy line)
..... Rods for stacking high channel antenna (Economy line)
..... Rods for stacking low channel antenna (Deluxe line)
..... Rods for stacking high channel antenna (Deluxe line)
..... Television antenna switch (2 positions)
..... Parallel wire transmission line (heavy)
..... Vinylite tubing
..... Twinex transmission line
..... RG59U Coaxial line
..... Tubular transmission line
..... Special 1-3/8 Dural tubing – 12 ft. length
..... Special 1-5/8 Dural tubing – 12 ft. length
..... Special 1-7/8 Dural tubing – 12 ft. length
..... Special 2-1/8 Dural tubing – 12 ft. length
..... Antenna rotator – with remote control switch
..... Junction box (2 position)
..... Junction box (3 position)
..... FM wave trap
..... Wafer antenna switch kit
..... Wafer antenna switch (geared type)
..... Waterproof transformer
..... Matching transformer
..... 19.75 mc wave trap
..... 27.75 mc wave trap
..... High-pass filter
..... Elevator Transformer
..... Coaxial connector
..... Pre-amplifier – permeability tuned
..... Dealer distribution system "1"
..... (Distribution box with 6 outlets)
..... Dealer distribution system "2"
..... (Distribution box with 6 outlets and 6 load boxes)
..... Attenuator resistors and pads
..... Filters
..... Antennaplex systems
..... Inverter, dc to ac
..... Neon test lamp

Survey Receiver. – Where the signal strength or the quality of the television reception at a particular location is at all doubtful, it is best first to conduct a survey to determine the best reception obtainable. A good test instrument to use is the television receiver which is eventually to be installed. But that is not always practical, particularly since the sale of the receiver frequently depends on obtaining satisfactory results from a preliminary survey.

The test is made with a specially rigged up television receiver. The receiver is equipped with meters in certain circuits, carefully calibrated so as to provide meter readings that can be interpreted in terms of the strength of the television signal. This feature is important in checking on the signal level of weak stations, and in determining the site on the roof at which the antenna picks up the strongest signal. However, in most locations, particularly in midtown areas where there is plenty of signal strength, the survey receiver is used to obtain a test picture on its picture tube screen.

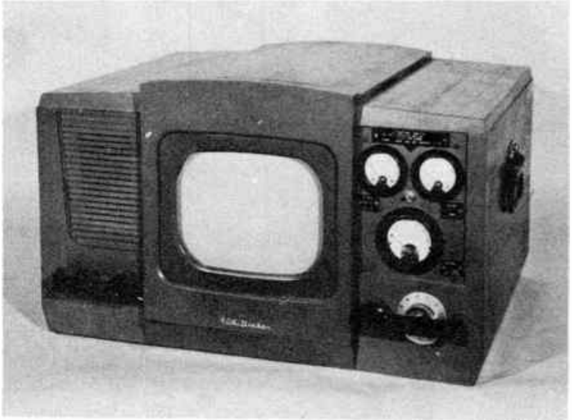

Fig. 12-2

The Survey Receiver shown in Fig. 12-2 is an RCA Model 8-TS-30 television receiver, altered only to the extent necessary to connect meters into the picture i-f and picture detector circuits. A block diagram of the modified receiver, showing where the meters are placed, is seen in Fig. 12-3:

By connecting a suitable meter across a part of the picture detector circuits, we can read the relative strength of any signal tuned in, as compared to a previously determined standard value. To obtain good picture quality, a definite signal voltage level must be available at the output of the picture detector. If the signal level at the antenna is high enough, it is possible to adjust the gain control in the picture i-f amplifier so that the output at the picture detector can be made the same for all signals that are tuned in. A meter connected in this gain control circuit can be calibrated to give the relative signal strengths.

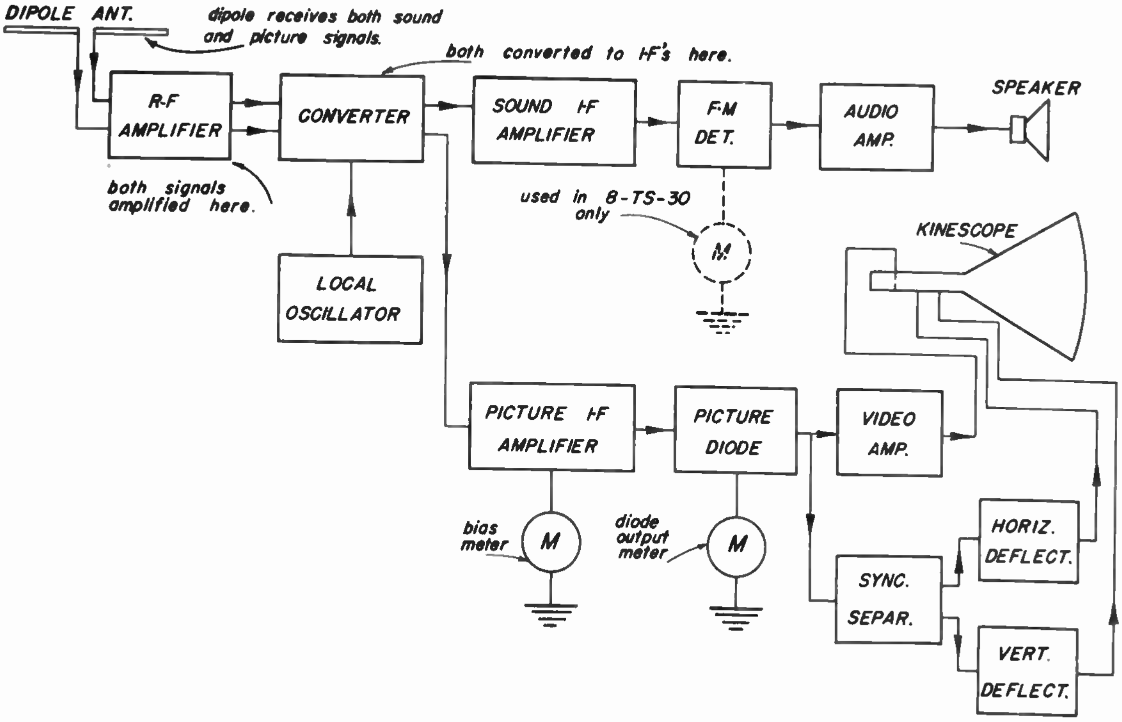

Fig. 12-3

Calibration and Use of Survey Receiver. – The meter in the gain control circuit is carefully calibrated. Calibration curves, such as that shown in Fig. 12-4, are prepared for each survey receiver.

To obtain an accurate reading, it is important that the conditions of the test be the same as, or as close as possible to, those during calibration. That requires the use of an antenna and transmission line that has been standardized for this purpose, accurate setting of the line voltage at 117 volts, and accurate tuning of the signal whose strength is to be measured.

An autotransformer, connected in the power supply line with an a-c voltmeter across its output, enables the voltage supplied to the receiver to be set at exactly the required 117 volts. The standard test antenna to be used for accurate signal strength measurements is a dipole resonated for Channel 2, connected to the survey receiver through a 50-foot length of 300 ohm parallel wire transmission line. The test antenna is usually mounted on a 30 foot collapsible mast, so that measurements can be made at different heights above the level of the roof.

When a signal strength measurement is to be made, the antenna is set up or held at the test site on the roof, the transmission line is connected to the receiver, and the receiver supply voltage is carefully set to the required 117 volts. The weakest station is tuned in as accurately as possible. Then the picture contrast control (which controls the gain of the receiver) is adjusted to give a predetermined reading on the meter in the detector circuit. The second meter will then read the picture i-f bias voltage, which is a measure of the gain of the receiver required to bring the input signal up to the desired operational level. The next step is to convert this reading to signal strength of the station under test. This is done by referring to the proper calibration chart.

The calibration curve shows the relationship between the meter reading and signal strength expressed as microvolts of input signal voltage. For example, on this particular chart, a meter reading of 60 indicates an input voltage of 110 microvolts; and a meter reading of 90 indicates an input voltage of 220 microvolts, as read on the calibration curve. (Each individual survey receiver has its own calibration chart. The one

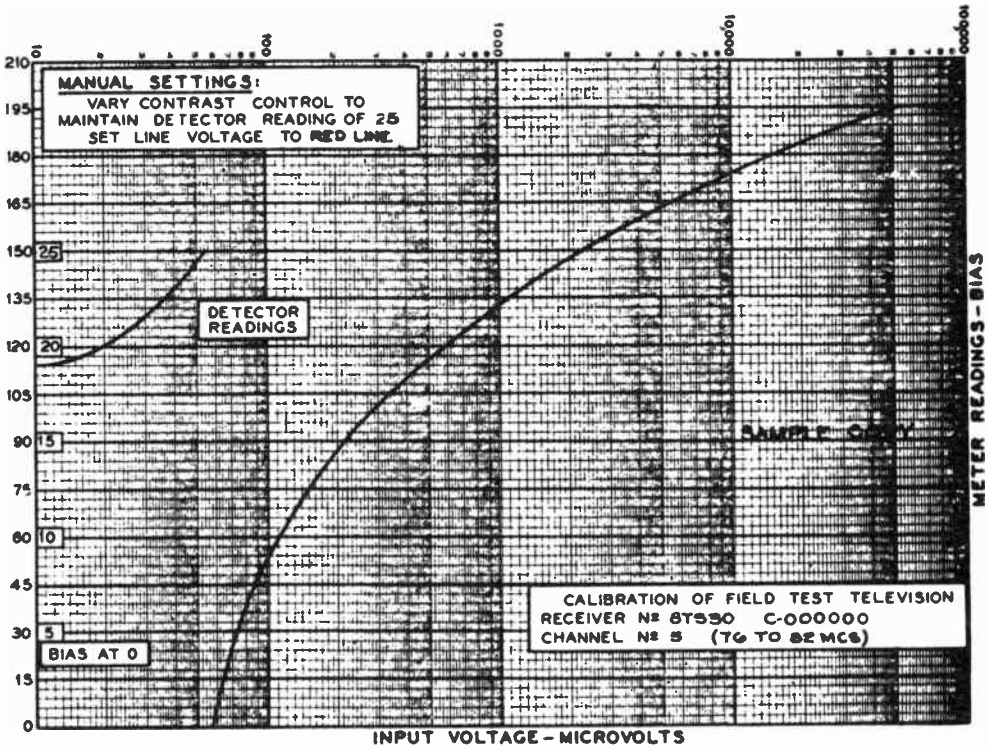

Fig. 12-4

shown in Fig. 12-4 is merely a sample, and cannot be used with any other survey receiver than the one for which it was made.)

It is important to remember that the correct operating conditions must exist *at the time that you are making the test.* Therefore, be sure to check the a-c supply voltage (which should be 117 volts) at the time you make the test of signal strength.

Extra Tall Masts. – One feature that makes an installation *special* is the use of one or more extra mast sections to form a mast taller than 12 ft. In fringe areas this additional height is needed to bring in a stronger signal. In a metropolitan area, where buildings or other structures may intercept the direct path of the signal, it may be needed to raise the antenna above a TV shadow cast by the obstructing structure. Even where it is not possible to get out of this shadow, raising the height of the antenna may result in obtaining a usable signal.

Most of the various sizes of mast section are designed so that two or three sections of mast can be telescoped one into the other to form masts of about 30 ft. in height. For masts taller than 30 ft., it becomes necessary to erect a tower. Such a structure is usually put up by a sub-contractor.

The methods of telescoping the mast sections and bolting them together and installing the supporting wires have been fully explained in previous lessons.

Extra Antenna Elements. – While raising the height of the antenna, in many cases, may be sufficient to bring in a usable signal, where the signal is weak it is necessary to add antenna elements to increase the signal pickup.

In fringe areas where high antenna gain is necessary, single or stacked conical or in-line type antennas give best results.

The situation is considerably different in mid-city areas, where the signal is strong. Here, too, additional antenna elements may have to be added. But in this case, the need is not to gain a stronger delivered signal, but to obtain greater directivity, in order to eliminate or to cut down on reflections or other interference.

To do an effective job in mid-city areas where stations are in different directions from the receiver locations, it is sometimes necessary to have a number of separate antennas. In some cases, the regular low and high frequency antennas may be used. In other cases, it may be desirable to use antennas cut for particular channels.

Transmission Lines for Special Installations – Where more than 100 ft. of parallel wire transmission line is used, the installation is considered as *special.* However, we usually think of special installations, insofar as transmission lines are concerned, as those requiring some other type of line because of unusual local conditions. The troubles most often encountered are excessive electrical interference or noise, and salt deposits on the line.

Where electrical interference or noise is encountered, the obvious solution is the use of some form of shielded transmission line. Twinex or RG59U coaxial line may be used, with Twinex preferred for reasons which are given later.

In shore areas where salt is likely to deposit on the line, protection may be obtained either by covering the parallel wire line with Vinylite tubing, or by the use of the tubular line.

Where no problem of interference or salt water deposits exists, but the line is subjected to rough usage or exposure to extremes of weather, it is often desirable to use the heavy duty parallel wire line.

Transmission line characteristics that must be kept in mind in deciding which to use are shown in the following table:

The parallel wire heavy duty line and the tubular lines have the same characteristic impedance as the regular parallel wire line, 300 ohms, which matches the normal input impedance of television receivers. The losses in these lines are quite low.

The shielded lines, Twinex and RG59U coaxial, have much higher losses; but they must be used in locations where serious interference is encountered. The characteristic impedance of the Twinex line, 225 ohms, does not present too serious a mismatch to the 300 ohms of the receiver input, and therefore can be connected directly. But, in the case of RG59U coaxial line, the characteristic impedance of 73 ohms is such a considerable mismatch that some form of coupling is needed.

Matching and Elevator Transformers. – In order to match the 73 ohm characteristic impedance of coaxial line to the 300 ohm input of the receiver,

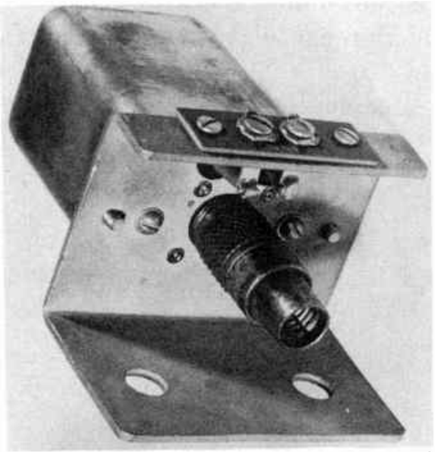

Fig. 12-5 Outdoor Matching transformer

TRANSMISSION LINE CHARACTERISTICS

Part No.	Description	Characteristic Impedance Ohms	Attenuation or Loss per 100 ft. at 100 mc Db	Attenuation or Loss per 100 ft. at 100 mc Output/Input
.....	Parallel wire line	300	1.25	0.86
.....	Parallel wire line (Heavy Duty)	300	1.25	0.86
.....	Twinex (two wires shielded)	225	4.0	0.63
.....	RG59U Coaxial line	73	3.7	0.653
.....	Tubular line	300	1.25	0.86

Note: The attenuation figures are made on a basis of voltage loss, not power loss.

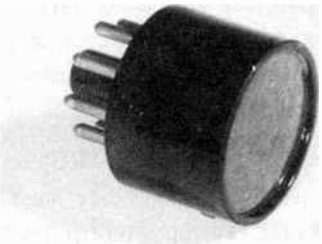

Fig. 12-6 Indoor matching transformer

a suitable matching device is needed. We can use the 73/300 ohm matching transformer at the receiver input, and a second matching transformer to match the antenna to the line. The outdoor transformer must be waterproof. It differs from the indoor matching transformer in appearance, as shown in Fig. 12-5 and 12-6.

At the receiver input, it is sometimes possible to get along without the matching transformer, if there is an elevator transformer on the receiver chassis that has a provision for connection to either a 300 or a 72 ohm input. The 73 ohm coaxial cable can be connected directly to the 72 ohm terminals without any mismatch. The elevator transformer and its circuit are shown in Fig. 12-7 (a and b).

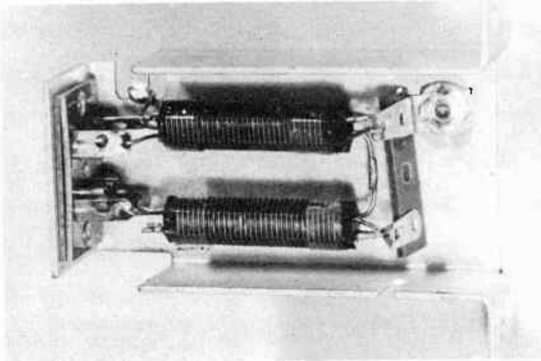

Fig. 12-7(a)

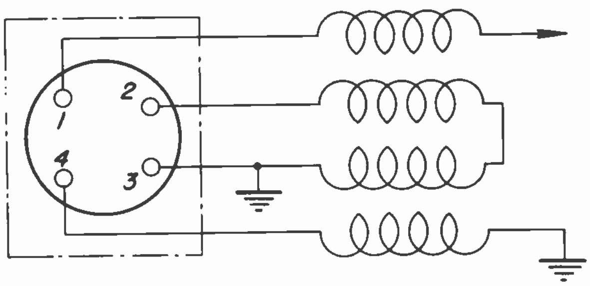

Fig. 12-7 (b)

Junction Boxes and Antenna Switches. – Where several separate antennas are installed, it is necessary to bring separate transmission lines down to the receiver, where the desired line may be selected by some form of switching arrangement.

The junction boxes shown in Fig. 12-8, providing for 2 and 3 lines, can be used in many cases. These are mounted at the receiver, and the desired line is selected by throwing the appropriate toggle switch on the junction box.

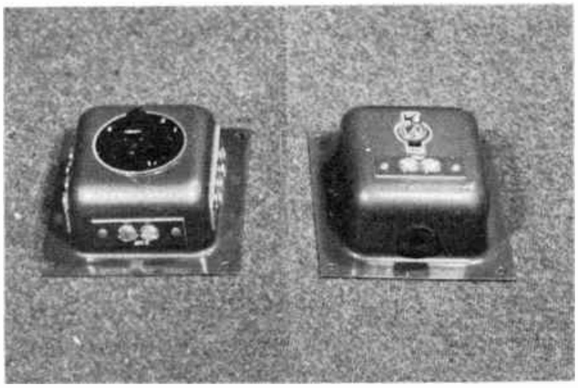

Fig. 12-8

To eliminate the need for selecting the proper antenna each time a station is changed, special wafer switches have been developed which can be mounted on the r-f unit of the receiver, and coupled directly to the r-f tuner. Then, when the station is selected, the correct antenna is automatically connected to the receiver input circuit. Two types of wafer switches are used. One is in the form of a kit which must be assembled and connected at the rear of the r-f unit on the projection type receivers. The other, a more recent development, is mounted at the front of the r-f unit and is coupled by a fibre gear directly to the r-f tuner.

The antenna switch kit, also known as the R.F. Modification Kit, consists of: 2 switch wafers, 1 support "A", 1 support "B", 1 support "C", 1 coupling with set screws, 1 detent. These are put together as shown in Fig. 12-9.

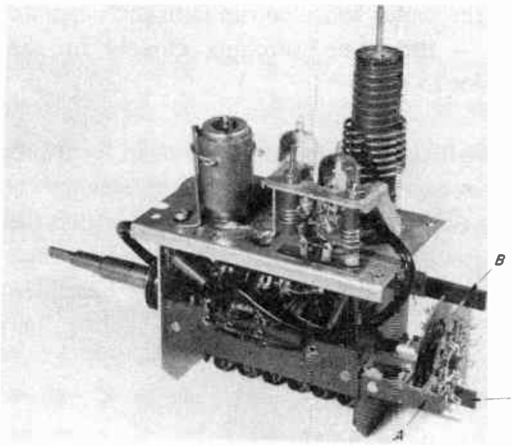

Fig. 12-9

The method of assembly is:

1. Put the coupling on the r-f unit detent shaft (See Fig. 12-9).
2. Fasten supports "A" and "C" in place as shown in Fig. 12-9 using screws for the head end.
3. Slip switch wafers into place, making sure that the switch contacts are in the same positions as those of the channel switch.
4. Fasten support "B" in place.
5. Slip short detent through wafers and fasten into coupling.
6. Connect a short length of parallel wire line from the wiper contacts, #1 position on the wafers, to T_1, the antenna input transformer.
7. Connect the various lines from the antennas to the corresponding contacts on the wafers (see Fig. 12-9.
8. If more than one high channel antenna is required, the connection strap between positions 7-13 may be cut to separate upper channel contacts.

The more recently developed 12 position wafer antenna switch couples directly to a fibre gear already installed on the tuning shaft of later model receivers. Some receivers may have a fibre disk that is not geared. In this case it is necessary to remove the disk and replace it with one that is geared. The unit, which comes completely assembled, is shown in Fig. 12-10

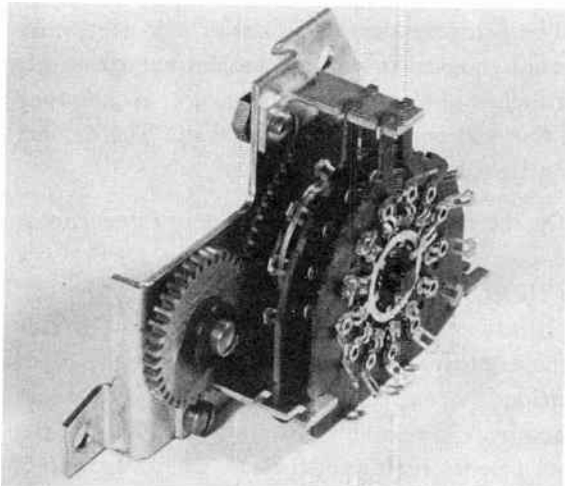

Fig. 12-10

Antenna Rotator. – Instead of using several different antennas which require separate transmission lines, in many cases it is possible to use one antenna to receive signals from stations in different directions by providing a means to rotate the antenna. This is done by placing an antenna rotator, at the mast. Its rotation is controlled by a remote control switch at the receiver. Such a rotator is shown in Fig. 12-11 (a), below.

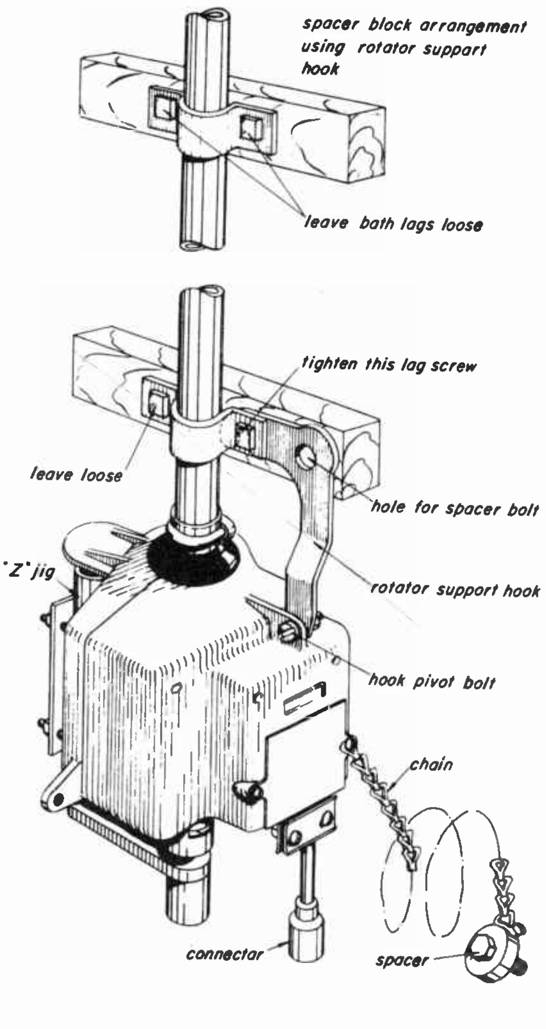

Fig. 12-11 (a)

The antenna rotator is designed to rotate in either direction at a slow speed. It will turn slightly more than one revolution, a total of 370 degrees, in approximately one minute. At the end of its rotation it will automatically stop until the proper control is set for it to rotate in the opposite direction.

Fig. 12-11 (b)

The control unit (Fig. 12-11 (b)) is connected to the motor by means of a four wire cable. With some rotators this may be in the form of a ribbon, looking like the parallel wire line but containing four wires. These four wires must connect to corresponding terminals at the rotator and at the control box. One wire is common (ground), one controls rotation to the left, another rotation to the right. The fourth wire connects to a switch at the rotator, that automatically shuts off the power when the motor reaches the end of its rotation in either direction, and at the same time closes a circuit which causes a pilot light at the control box to light up.

The operation of the system is simple. The customer turns the switch on the control box for rotation to the RIGHT. The rotator starts up and continues to turn until it reaches the end of its motion or is stopped as the customer turns the switch to stop. If the rotator is not stopped it will stop automatically at the end of its motion and the warning pilot light will light up. The customer can then proceed to run the rotator in the opposite direction. He cannot tell in just what direction the antenna is pointing. He must watch the picture on the television receiver and stop the rotation at the point at which the picture is clear. If he over-runs the correct setting, he can stop the motor and then run it in the opposite direction — this time watching closely for the proper point to stop.

Pre-amplifier. – In fringe areas or in locations where it is necessary to increase the strength of a weak signal or signals to a level at which the receiver can operate properly, a pre-amplifier may be connected ahead of the receiver. Two examples of a pre-amplifier unit are shown below, but many other types are available.

Fig. 12-12

The Fringemaster pre-amplifier is a neat, compact unit, housed in a metal cabinet approximately four inches high, five and one quarter inches long and four and one quarter inches deep. The cabinet has a light brown enamel finish.

On the front panel, there are only three knobs. The center knob has the notations: OFF, LOW and HIGH. In the LOW position, one of the two amplifiers contained in the unit is turned on. This is the amplifier for Channels 2 to 6. At the HIGH position the amplifier for Channels 7 to 13 is turned on. The knob at the left hand side of the panel permits tuning for the low Channels 2 to 6, while the right hand knob tunes the high Channels 7 to 13.

Each of the two amplifiers consists of a 6J6 dual triode connected in push-pull, with permeability type tuning, resulting in a particularly good signal to noise ratio with a reasonable amount of gain. While some gain is needed in a pre-amplifier, it is very important that it be relatively free of noise; since noise will show up in the picture as "snow", and will spoil the reception.

The input and output connections to the Fringemaster unit are made at the rear of the chassis, as shown in Fig. 12-13. Terminals 1 and 2, and 4 and 5 provide balanced 300 ohm input and output to match the 300 ohm parallel wire line. Terminal 3 is grounded. Used with terminal 2 this provides a 75 ohm input, which can form a good match for an unbalanced coaxial transmission line. A similar 75 ohm unbalanced output is provided through terminals 3 and 4.

Since this pre-amplifier provides for both input and output of either 300 or 75 ohms, it is possible to connect a coaxial line directly to the 75 ohm input terminals, and a 300 ohm parallel wire line connection from the output terminals to the receiver input terminals. This eliminates the need for a matching transformer at this end of the transmission line.

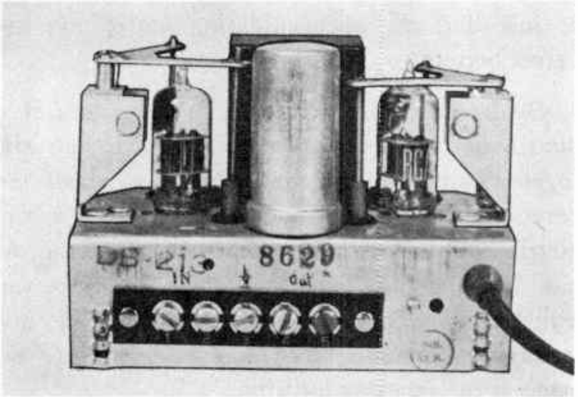

Fig. 12-13

Attenuator Resistors and Pads. – There are locations close to transmitter stations where the signal from one or more stations is much too strong for the receiver input, and something must be done to cut down this signal strength. This can be done by the insertion of attenuator resistors, used singly or in T or H pads, in the transmission line, as explained in Lesson 10.

These resistors must be of the carbon, non-inductive type. They have the property of attenuating all signals equally, which is desirable in many cases. Where it is desired to cut down on the strength of a particular frequency, other means are necessary – such as the use of wave traps, filters or stubs.

Since the amount of attenuation needed will depend upon the particular conditions encountered on the job, the installation man should carry an assortment of carbon resistors. These may vary from low values of about 10 ohms that may be needed in coaxial line adjustments to several thousand ohms required in certain types of filters.

The determination of the particular values of resistors to use and their arrangement in pads and filters will be considered later in the study of specific types of installations.

Wave Traps and Filters. – Where interference troubles are encountered, the offending signal may be eliminated by one or more of the regular traps or filters that are available. These include the following:

a. Wave trap for FM band (88-108 mc)
b. 19.75 Mc wave trap
c. 27.25 Mc wave trap
d. High-pass filter cutting off below Channel 2

The 19.75 mc and 27.25 mc wave traps are designed to slide over the i-f coils in the receiver to attenuate interfering signals at those particular frequencies. The other items in the above list are used at the input terminals of the receiver.

A comprehensive study of the various types of interference and the methods for correcting them will be made in Lesson 13. The use of certain of the above devices will be considered in this lesson where they apply to these *special* installations. They are shown in Fig. 12-14.

Inverters or Rotary Converters. – In d-c districts, it is necessary to have some device that will change the local d-c to a-c power supply for the receiver. Such a conversion unit, which could be an inverter or a rotary converter, must be furnished by the customer. A neon test lamp will assist in checking for a-c or d-c at the power line outlets, as explained in Lesson 4.

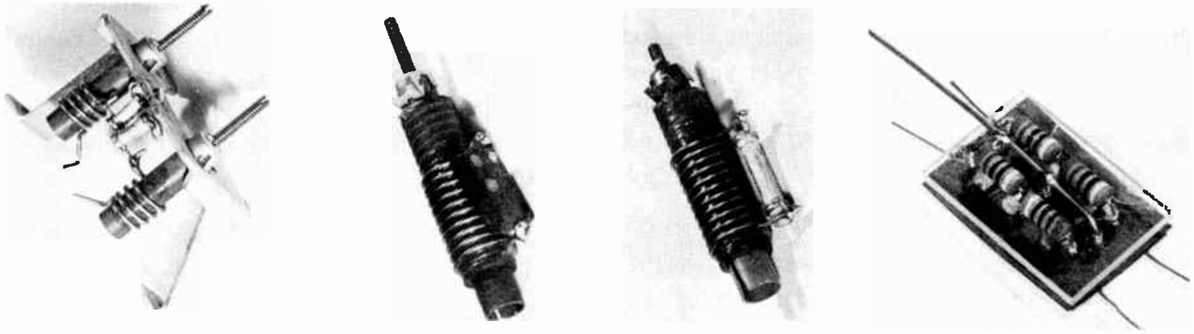

FM wave trap

27.25 Mc wave trap

19.75 Mc wave trap

High-pass filter

Fig. 12-14

In order to make a survey of reception conditions in a d-c district, where such areas exist, the shop should have available a number of inverter units. In most cases this is similar to the inverter unit shown in Fig. 12-15, which supplies a rated output of 350 watts 110-120 volts a-c., from an input of 110-120 volts d-c.

Fig. 12-15 (a)

With a suitable inverter unit available, the installation is no different from the usual installation — where an a-c power supply is available. It is important, however, to have sufficient power output in watts from the inverter unit. If the current drain from the unit becomes too high, its output voltage will drop. This usually shows up in the television receiver as a picture of reduced size, which cannot be expanded to fill the kinescope screen.

In general, the wattage rating of the inverter used to change the d-c supply to a-c must have a factor of safety of 1.5. That means that for satisfactory day after day operation of a television receiver whose wattage rating is 325 watts, the rating of the inverter unit should be 325 x 1.5, or at least 487 watts.

Dealer Distribution Systems. – Where it is desired to connect a number of receivers to the same antenna or antenna system, as in a dealer's installation, equipment is available for two types of installations, accommodating up to six receiver outlets.

Dealer Distribution System "1" consists of a distribution box with six outlets and with six toggle switches to connect the individual receivers. Dealer Distribution System "2" has a distribution box with six outlets, but in addition has six loading boxes at which the receiver switches are located. This system has the advantage of enabling the receiver control to be made at the receiver location.

A discussion of the operation of the Dealer Distribution Systems will be covered in a later section.

Antennaplex System. – To provide for the operation of many receivers in a single building, the RCA Antennaplex System has been developed. This system provides satisfactory television and FM signals to multiple receiver outlets in such structures as apartment houses, hotels, department stores, institutions and private homes where more than one viewing screen is desired.

The Antennaplex System provides either a separate antenna for each channel in a given area, or a single mast with separate antenna units for the reception of each station in the service area. In this way, it eliminates the installation of a large number of antennas on a single building. In buildings where many antennas had previously been installed, interaction between the antennas resulted in serious interference; and the addition of another antenna frequently presented a difficult physical problem. The Antennaplex System replaces all these individual antennas and requires only one antenna unit for each station in the area.

A special amplifier is connected to each antenna unit to boost the signal to a level high enough to supply all the receivers in the system. The outputs of all channels are then fed over a distribution network to the multiple outlets. Only one cable connects to each outlet, carrying the output of all channels.

The responsibility of a television installation man is usually confined to connecting a receiver to an Antennaplex system that is operating. The problems that may be encountered will be studied in a later section.

INDOOR SPECIAL INSTALLATIONS

12-3. The major special installation problems are found in outdoor installations in weak signal areas, where the signal must be boosted, or in strong signal areas, where station directivity, reflections or interference are the headaches. However, there are cases where an indoor installation may be classed as *special.* This problem is frequently encountered in buildings on which the landlord does not permit the installation of an outdoor antenna.

Survey for an Indoor Installation. – Where the quality of reception is not known, the customer frequently requests that a preliminary survey be made. This is done with the survey receiver and such types of antennas as are permitted at the location. Sometimes suitable locations may be found for one or more indoor antennas. Sometimes the addition of a pre-amplifier is required to bring in sufficient signal for operation with an indoor antenna.

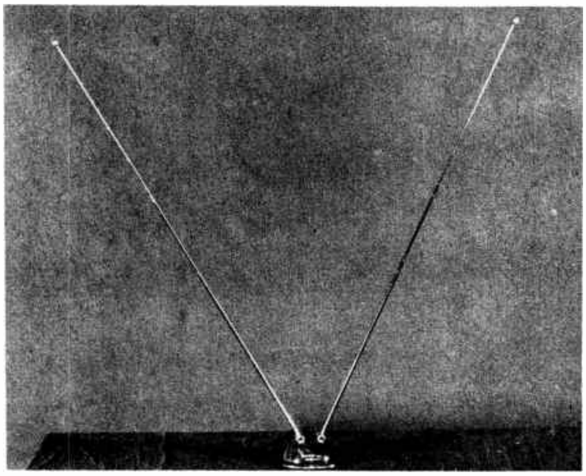

Fig. 12-15 (b)

An example of a job report of a typical survey for an indoor installation is shown in Fig. 12-16. This form would be filled out for each job performed by the installation man, showing the essential information that must be supplied for the job. In this particular case, the work to be done was merely to "conduct a survey to determine reception". No material was used up on this job, so the "MATERIAL USED" column was not filled out. But in the "JOB DETAILS" section complete information is given.

Note particularly the record of reception results. This record is important since it shows the nature of the reception to be expected at that location. This is a guiding factor in determining whether an installation is to be made, and it is the standard that must be reached or surpassed when the final installation is made.

Also note that a record is kept of the hours of travel and of work and the mileage covered. For just a survey in which no installation is made, the charge may be a flat rate, as indicated. But where an installation is made, the time required is one of the items that determines the cost charged to the customer. Another important item, of course, is the materials used in an installation. Such materials must be carefully listed, so that the customer who is asked to accept the "work and charges – as satisfactory" knows just what he is paying for.

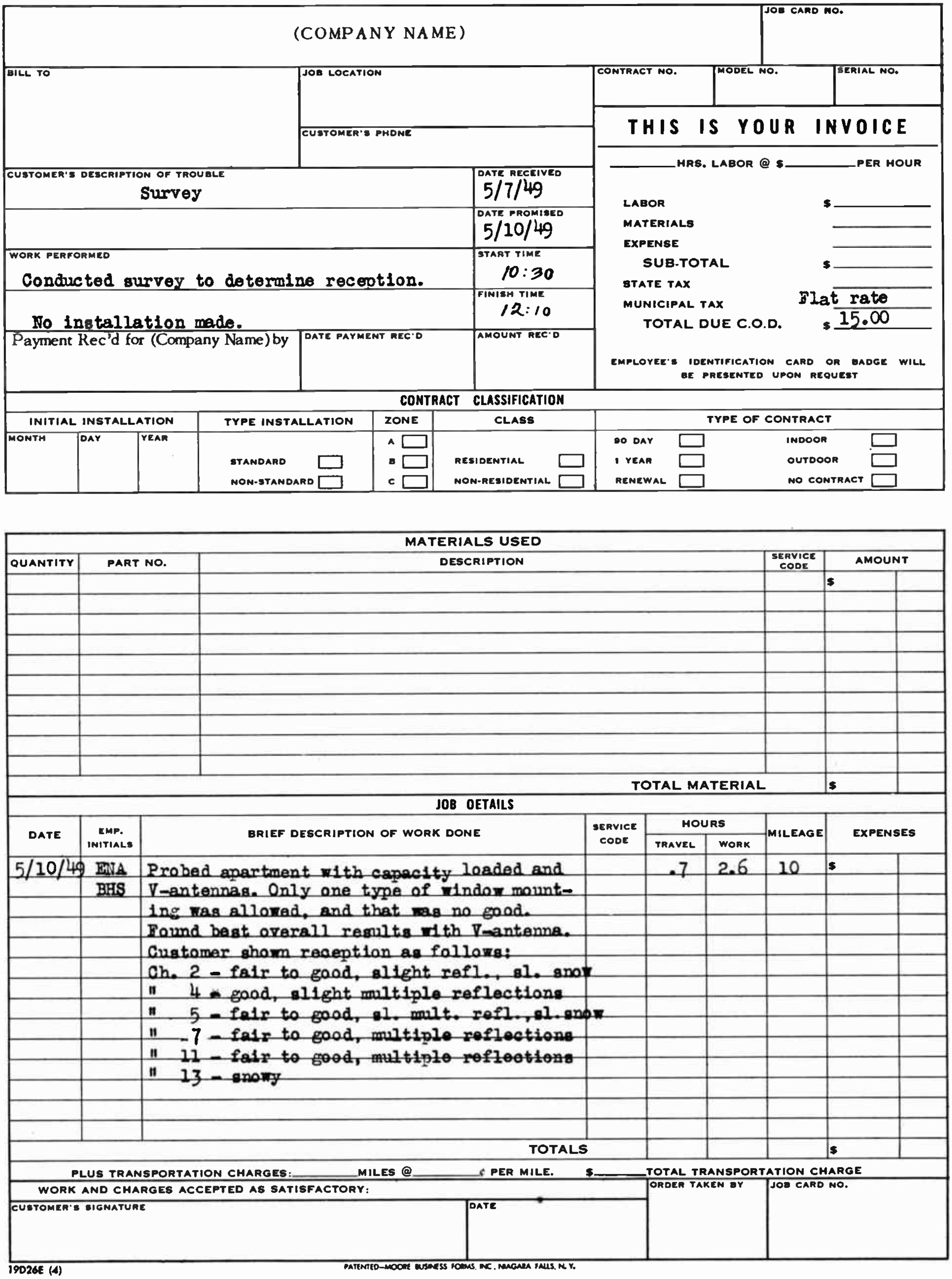

(COMPANY NAME)

JOB CARD NO.

BILL TO	JOB LOCATION	CONTRACT NO.	MODEL NO.	SERIAL NO.
	CUSTOMER'S PHONE			

CUSTOMER'S DESCRIPTION OF TROUBLE Survey	DATE RECEIVED 5/7/49
	DATE PROMISED 5/10/49
WORK PERFORMED Conducted survey to determine reception.	START TIME 10:30
No installation made.	FINISH TIME 12:10

Payment Rec'd for (Company Name) by	DATE PAYMENT REC'D	AMOUNT REC'D

THIS IS YOUR INVOICE

______ HRS. LABOR @ $______ PER HOUR

LABOR	$
MATERIALS	
EXPENSE	
SUB-TOTAL	$
STATE TAX	
MUNICIPAL TAX	Flat rate
TOTAL DUE C.O.D.	$ 15.00

EMPLOYEE'S IDENTIFICATION CARD OR BADGE WILL BE PRESENTED UPON REQUEST

CONTRACT CLASSIFICATION

INITIAL INSTALLATION			TYPE INSTALLATION	ZONE	CLASS	TYPE OF CONTRACT	
MONTH	DAY	YEAR		A ☐		90 DAY ☐	INDOOR ☐
			STANDARD ☐	B ☐	RESIDENTIAL ☐	1 YEAR ☐	OUTDOOR ☐
			NON-STANDARD ☐	C ☐	NON-RESIDENTIAL ☐	RENEWAL ☐	NO CONTRACT ☐

MATERIALS USED

QUANTITY	PART NO.	DESCRIPTION	SERVICE CODE	AMOUNT
				$
		TOTAL MATERIAL		$

JOB DETAILS

DATE	EMP. INITIALS	BRIEF DESCRIPTION OF WORK DONE	SERVICE CODE	HOURS TRAVEL	HOURS WORK	MILEAGE	EXPENSES
5/10/49	ENA	Probed apartment with capacity loaded and		.7	2.6	10	$
	BHS	V-antennas. Only one type of window mount-					
		ing was allowed, and that was no good.					
		Found best overall results with V-antenna.					
		Customer shown reception as follows:					
		Ch. 2 - fair to good, slight refl., sl. snow					
		" 4 - good, slight multiple reflections					
		" 5 - fair to good, sl. mult. refl., sl. snow					
		" 7 - fair to good, multiple reflections					
		" 11 - fair to good, multiple reflections					
		" 13 - snowy					
		TOTALS					$

PLUS TRANSPORTATION CHARGES:______ MILES @______ ¢ PER MILE. $______ TOTAL TRANSPORTATION CHARGE

WORK AND CHARGES ACCEPTED AS SATISFACTORY:

CUSTOMER'S SIGNATURE	DATE	ORDER TAKEN BY	JOB CARD NO.

19D26E (4)

PATENTED—MOORE BUSINESS FORMS, INC., NIAGARA FALLS, N. Y.

Fig. 12-16

Indoor Installation Problems. - Almost any type of condition may be encountered in an indoor antenna installation. Such installations are frequently made in a strong signal area, where the signal is so strong that the gain of an outdoor antenna is unnecessary. But the presence of many high buildings and considerable metal in the building structure, very often results in multiple reflections and scattering of the signal, so that reception conditions are hard to predict.

At the receiver location, the strongest signal from a particular station may not be the direct signal. Nor may it be the reflection from a nearby building. It is possible for the strongest signal to be picked up from a reflection or from induction from a metallic structure within the building, from the power line or from the metallic chassis of the receiver itself. A highly directional antenna may be able to sort out this strongest signal from all others, sufficiently well to be usable.

In some locations, the built-in antenna will give satisfactory results. Indoor antennas that can be positioned or adjusted where directivity is a problem are: the indoor V-antenna, the twinlead dipole and the twinlead folded dipole.

Positioning of the antenna, and in many cases of the receiver, has such a considerable effect on reception that it is important to test out all the likely positions to find the best obtainable reception. The favorable positions must be carefully noted.

Of course, it is possible to use a V-antenna and have the customer move it around to the most favorable position for each particular station, every time that he switches stations. That solution may be the acceptable one in many cases. However, a solution which makes the installation *special* is to set up a different antenna in the position that is most favorable for each station. Usually, several stations are picked up equally well by the same antenna, so that a combination of two or three may suffice to bring in all stations reasonably well.

The transmission lines from these antennas are then brought to a junction box or to an antenna switch (see Section 12-2) so that the proper antenna can be selected for each channel.

OUTDOOR SPECIAL INSTALLATIONS

12-4. In weak signal areas, the primary problem is to get as much gain as possible, so that satisfactory reception is obtained. Such a condition may exist for all active channels in that area, or there may be one or two weak stations whose reception it is necessary to improve. In strong signal areas, the trouble is usually too much signal, complicated by the need for receiving signals from several different directions, and often suppressing reflections at the same time.

Weak Signal Areas. - The particular method or methods of increasing the gain of the installation will depend on the conditions encountered at the particular location. In fringe areas, at a considerable distance from the transmitters, added signal is obtained by installing a taller mast, using multiple or stacked antenna elements, adding a pre-amplifier to the receiver input, *and more careful routing and fastening of the transmission line.* In areas where only one or two stations are weak while the others are satisfactory, reception of the weak stations can be improved by adding additional antennas, in some cases especially cut for the particular channel, or adding a pre-amplifier. In all cases, it is desirable that a survey be made for an accurate determination of reception conditions.

Fringe area installation with which the installation man deals normally, have been covered in detail in Lesson 11. Installations in which one or two weak stations need to be boosted while the others are of satisfactory strength may occur in midtown areas.

A condition resulting as more transmitters are put into operation, is reception from two or more distant transmitting centers from different directions. Since reception from each transmitting center requires maximum gain, including of course, a high degree of directivity, an antenna oriented to one transmitting center will not receive signals satisfactorily from some other direction.

Of course, the problem can be solved by having separate antennas. Another practical solution is to mount the antenna on a antenna rotator, so that the antenna can be positioned by remote control.

Where two transmitting centers are in opposite directions from the receiver location, it is possible to use a special antenna which remains in a fixed position but whose direction of reception can be changed by a phase switching system. Such an installation is shown in Fig. 12-17.

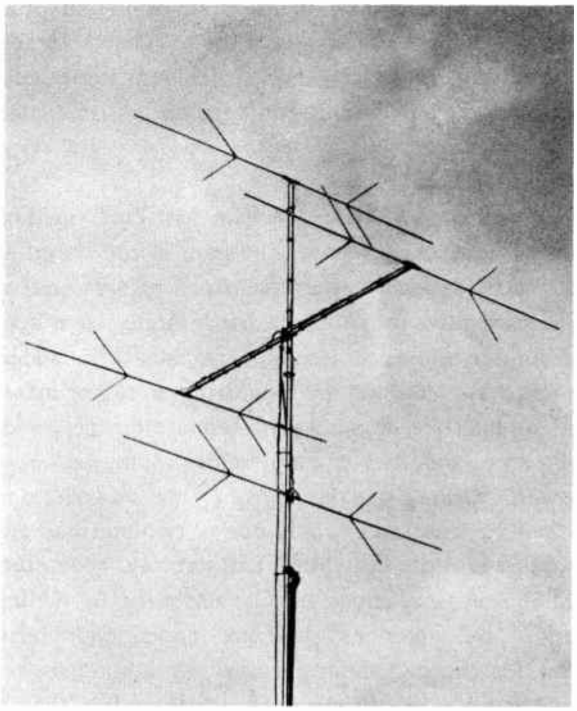

Fig. 12-17

Strong Signal Areas. – In strong signal areas where the receiving location is likely to be close to one or more transmitters serving the area, with reception coming from different directions, we are not concerned so much with signal strength as we are with directivity. In addition, since the strong signal areas are usually in midtown, we are troubled with multiple reflections and, in many cases, considerable local interference. In some cases, the receiver is located so close to the transmitter or transmitters that the signal strength is excessive and the receiver circuits are overloaded. Almost every conceivable reception problem may be encountered in these areas, and each must be solved in accordance with the particular conditions found at the location.

The first step in determining the type of installation needed is, of course, a survey. Where the installation has been authorized, the survey is considered a part of the installation. Sometimes, however, the customer wants a survey to be made first before deciding on the permanent installation.

Survey Procedure in Strong Signal Area. – In making a roof survey to determine the conditions for best reception, the essential steps are:

1. Contact the owner or building superintendent to obtain necessary permission, determine building rules, and find out what type of assistance (if any) will be needed.
2. Determine the location in which the set will go. This does not mean the exact location in the room. It does mean, however, what floor, which side of the building, easiest access to the roof, etc.
3. Make certain that an a-c outlet is conveniently close to the receiver location. Don't guess. Check the outlet with a neon tester. If only d-c is available, the customer must furnish an inverter before a complete installation can be made (see section 12-6). For the purpose of the survey, however, get an inverter from your shop.
4. Watch for the possible routes for the transmission line.
5. Note whether the location is likely to have much local interference. Unless you are *sure* that electrical interference is a problem at the location, the survey test should be made with parallel wire transmission line. If you are sure that electrical interference is present, or if you note that previous installations in the building have been made with coaxial cable, you can save time by running a coaxial line for your test.
6. Go up to the roof and look it over carefully, noting its condition, type and orientation of antennas already installed, and likely sites for mounting an antenna. You will want to keep your antenna at least 10 feet from any antenna previously installed for some other receiver in the building.
7. Set up the survey receiver at the location desired by the customer, run the transmission line for the survey and the sound phones for communication from receiver to the roof, and bring the survey antenna and mast to the roof.
8. Since a roof survey requires that the test antenna be moved to all likely sites on the roof, and at each site rotated to determine best reception from each station while the effect of each change is carefully noted on the survey receiver down below, two men are normally needed for the job.
9. With everything connected for the test, be sure that you leave enough slack in the transmission line and sound phones to permit the test antenna to be moved around to all likely sites on the roof.
10. The standard test antenna described in Section 12-2 is designed to give an accurate measurement of signal strength. This antenna, a simple dipole cut for Channel 2, is not satisfactory for the directional problems encountered in strong signal areas. Besides, we are concerned more with picture quality than with signal strength. Therefore, the antenna to use in your survey should be the type you are likely to install at that location. If at all in doubt, use a standard dipole and reflector in the initial tests. You can substitute other types

later, if necessary. However, you should use the collapsible survey mast, on which to mount your test antenna. This will enable you to raise or lower the antenna at will.

11. The first site to test is the one at which the mast mount and the transmission line routing can most readily be installed. If this site works out well, and it may in many cases, it may not be necessary for tests to be made at other sites. However, if the reception of even one station is not up to standard, alternate sites should be checked.
12. At each site, position the antenna for best reception for each station. Note the results carefully. Determine the proper orientation for the weakest station. If the reception for the weakest station at this orientation is satisfactory, check the reception of all other stations. You might be lucky and have all stations come in well at this antenna setting. But the chances are that one or more stations will give you trouble.
13. If you have trouble with reception from one or more stations at the first site tested, before moving the antenna to an alternate site it is best to find out how the signals change with an increase in antenna height or by moving the antenna a few feet in different directions. Note carefully the reception for each station for each change made, watching particularly for improvement in the reception of any stations.
14. From an observation of reception at all sites and antenna settings, you can determine the best site and orientation for each station. From this information you can decide which type of antenna or antennas should be installed and whether one or more separate antennas, are needed.
15. By observing the quality of reception, you can decide whether parallel wire transmission line will be satisfactory or coaxial or other shielded line is needed.
16. Although the use of other than standard antenna and transmission line will not give an accurate measure of the signal strength at the roof, it will give a measure of the signal strength delivered to the receiver input terminals. By taking the signal strength measurements for each station, you can determine whether the signal from any station is so weak that it must be boosted or whether one or more signals are so strong that they must be attenuated.
17. Accurately record the positions on the roof at which the antenna or antennas should be installed, the route for installation of the transmission line, and the best obtainable reception for each station.
18. Demonstrate to the customer the reception results obtained. If in the survey test the reception from any station is below standard, explain the probable reason to him (interference, overloading, weak signal, etc.) and whether or not such condition can possibly be cleared up in the final installation.
19. Prepare a complete list of all the materials needed for the final installation problem and an estimate of the time required. Where the installation problem is not too involved, a complete cost estimate should be prepared and presented to the customer for approval.

A Sample Survey Report. – It would be nice if, at this point, we could illustrate the results of the foregoing procedure by showing a typical survey report. Unfortunately, there's no such animal as a *typical* special installation. By their very nature, the situations requiring survey reports and special installations are deviations from the typical. We can, however, take a look at a survey report made for one particular situation, just as an example:

REPORT OF SURVEY

	Hours		
	Travel	*Work*	*Mileage*
Conducted survey to determine reception. No installation made	*.5*	*3.0*	*5*

Contacted Mr. C_____ who showed location in which set was to go. This is a Bar on the first floor, north side of the building. An a-c outlet is available.

Surveyed roof for best reception. Found best reception on the west end as shown in the drawing (Fig. 12-18). Reception was:

Channel 2 – Very good, slight close-in reflections. Signal strength over 20K μv (20,000 microvolts).

Channel 4 – Good, slight reflections, over 20K μv.

Channel 5 – Very good

Channel 7 – Very good

Channel 13 – Fair

Channel 2, overloading – must be attenuated about 10-1.

Coaxial lead-in is required, a 550 ft. run as per drawing.

The building engineer assisted in determining the line run.

This is an abnormal installation.

Materials required:

Approximately 550 ft. coaxial line.

2 Matching transformers

1 dipole antenna

1 High frequency antenna

1 standard mast and mount

Estimated 24 man hours to mount antenna and run lead. Must drill through 4 walls as indicated by circles on drawing. (See Fig. 12-18 on next page.)

There are a number of things about this survey and the report that merit careful study. First of all, the report while brief, gave all the essential details. The carefully prepared drawing shows not only the location of the antenna but two alternate routes for the transmission line with the location of points at which holes must be drilled.

From the drawing you will note that the installation is in a 19 to 20 story building, with the receiver located on the first floor. This calls for an extremely long transmission line run. Since there is bound to be much electrical interference in such a location, the need for a coaxial line is obvious.

The drawing shows one route for the transmission line is down through the elevator shaft,

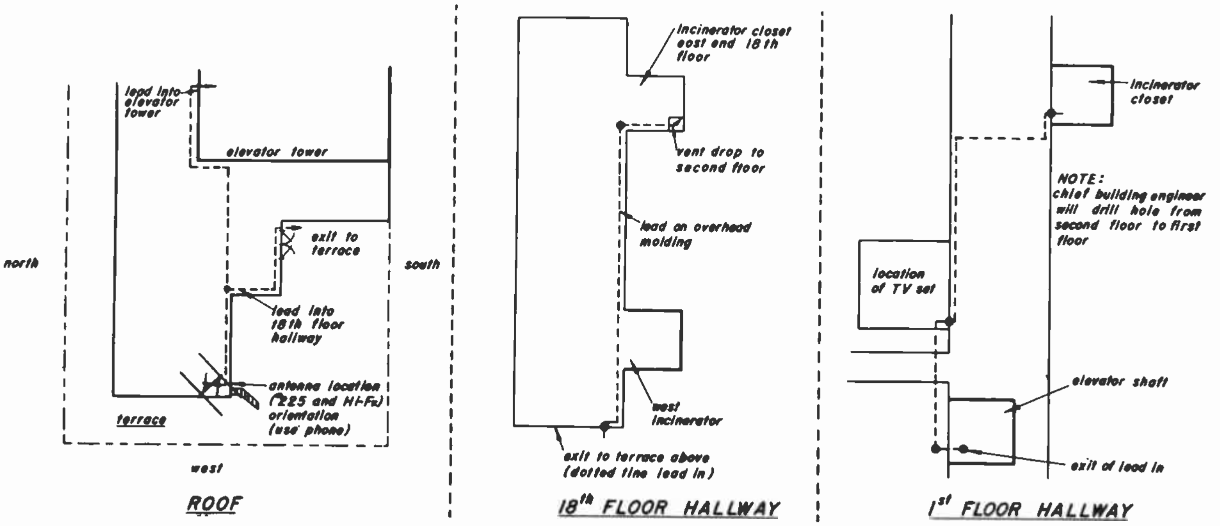

Fig. 12-18

while the other route (the one recommended for the final installation) runs through hallways and down a vent. It is noted, that the chief building engineer assisted in determining the line run. *This last observation is very important.*

Always Consult Building Engineer. – In an apartment house or business building, the superintendent or building engineer *must be contacted and consulted* right at the start. He is responsible for the safety of the building, and he knows just what can and what cannot be permitted in that building. In practically all cases, he will be extremely cooperative. It is in his interest to keep the tenant satisfied.

The running of a long transmission line, such as in this case from the roof of a 20 storey building all the way down to the first floor, is always something of a problem. In many cases it is necessary to run that line down the outside wall. In this case, through the interest and the *permission* of the chief building engineer, it was possible to run the line for the survey down the elevator shaft, all the way down to the first floor. This resulted in a considerable saving of time – only 3 hours were required for the complete survey.

The running of a transmission line down an elevator shaft must never be attempted without the permission and assistance or supervision of the building engineer. Not only your safety, but the safety of others is at stake.

Installation of Several Antennas. – Where a customer wants good reception on all stations, it is frequently necessary to use several antennas. Here is a case in which a difficult problem was presented due to very strong signals from the transmitting stations, and surrounding tall building which are sources of very severe reflections. In an effort to overcome these problems, every precaution was taken to reduce the effects of these conditions, such as using a shielded line to reduce direct line pickup and more directive high channel antennas to reduce pickup of reflected signals.

SPECIAL INSTALLATION REPORT (1)

Conducted survey and Installation was made	*Labor and travel, 48 hours total*

1. Made survey electrically of all stations to determine the best locations for antennas, and also to determine the number of antennas necessary to receive the stations from which reception was possible.
2. Located all antennas on one mast atop the roof of the water tank penthouse (see Fig. 12-19).
   (a) Installed hi-low combination antenna for Channels 2-4-5-7-9, consisting of a straight dipole and reflector and an aluminum hi-channel folded dipole and reflector with one director. The two antennas were coupled to a common transmission line using a standard harness.
   (b) Installed aluminum hi-channel folded dipole and reflector with two directors for Channel 11. (The high channel folded dipole and reflector with directors were a standard high frequency antenna. The directors were made of tubing cut to size from straight dipole rods and bolted in place on an extension to the cross arm of the antenna.)
3. Installed two transmission lines from antennas to receiver location, using 225 ohm shielded Twinex cable.

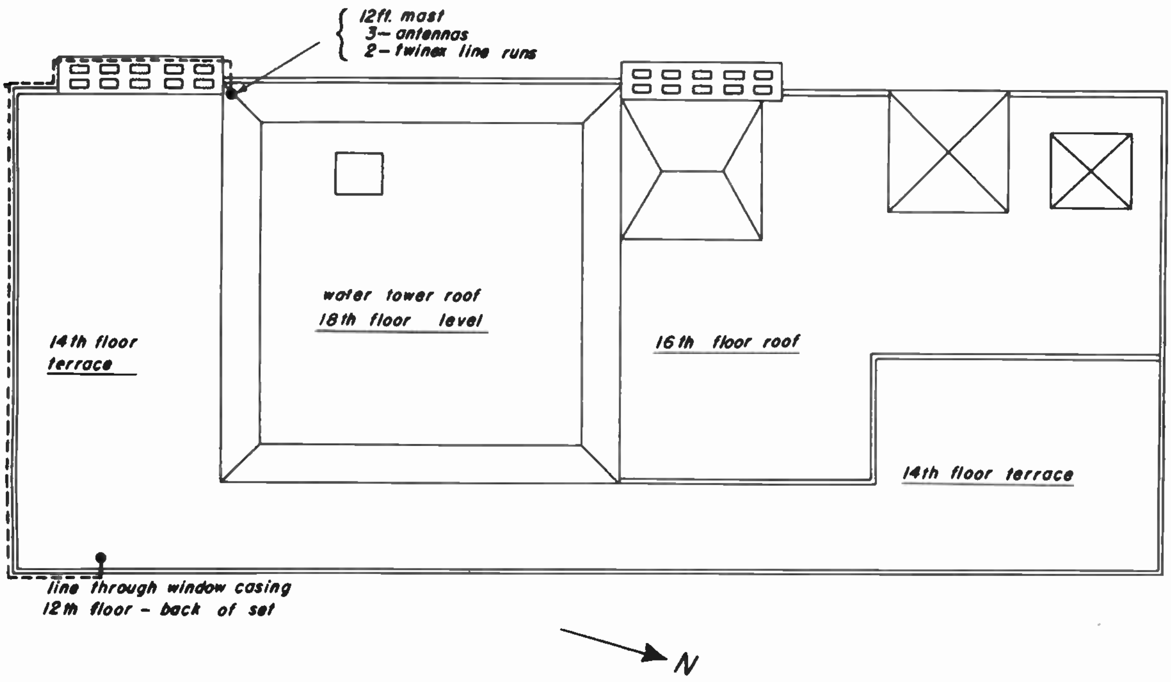

Fig. 12-19

4. Installed antenna switch wafers on receiver R.F. unit so that antennas can be switched automatically as the desired channel is selected.
5. Installed a simple dipole antenna made of parallel wire line on the rear of the receiver cabinet for use on the FM and the Broadcast bands. This was necessary since the transmission lines were run directly to the television receiver chassis.
6. Adjusted the FM trap to reduce image interference on Channel 2. Installed a trap for Channel 9 because of interference from Channel 2.
7. Made final receiver adjustments.
8. Mr. D____was not at home during the time of the installation and, therefore, was not available to observe the final results upon the completion of the installation. However, Mrs. D_____was shown reception on all available channels and she said that the results were satisfactory. There were:

Channel 2 — Very good — faint interference bars at times, depending on viewing distance and contrast brightness settings.
Channel 4 — Excellent
Channel 5 — Excellent
Channel 7 — Very good — slight reflections.
Channel 9 — Excellent
Channel 11 — Very good — slight reflections
Channel 13 — Fair

An unusual feature of this installation is the use of highly directive antennas. This high degree of directivity, which works particularly well on the high channels, is obtained by adding one or more director elements on the antenna cross arm ahead of the active element — in this case a folded dipole.

The director elements are cut to a length slightly less than the length of the folded dipole, and the spacing is slightly less than one-quarter wave separation ahead of the active element. It is possible to make the directivity of the antenna even sharper by adding additional directors. But in practice it is seldom that more than two directors are used.

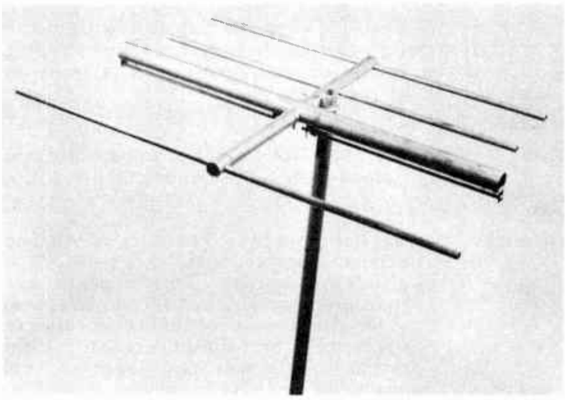

Fig. 12-20

Another problem encountered here is the need to eliminate interference. This was done by the addition of suitable wave traps at the receiver input. A complete discussion of interference problems is given in Lesson 13.

Some additional problems were encountered in the following installation:

SPECIAL INSTALLATION REPORT (2)

Conducted Survey and installation was made.	*Model 648PTK Serial No.*	*Labor and Travel 48 hours total*

1. Conducted survey to determine best reception. All stations are blocked by taller buildings across the street. The picture quality obtained is the optimum for this location.
2. Three antennas were installed on the sixth floor roof to feed the receiver on the second floor of the building. One antenna is for Channel 5 only. A second high frequency antenna feeds Channels 9 and 11. A combination high-low antenna provides reception on Channels 2-4-7.
3. Three separate transmission lines were run to the receiver. For the long unsupported run from the Channel 5 antenna, Twinex was used. This provided the necessary strength and also gave better shielding.

   A parallel wire line was found satisfactory for the antenna providing reception from Channels 9 and 11.

   A coaxial transmission line was used for the combination high-low antenna for Channels 2, 4 and 7.
4. The run of three transmission lines down the building and around the room in which the receiver was placed was difficult, since care was necessary to avoid defacing the interior and exterior appearance. The best possible solution was used in this installation. If severe winds or weather conditions affect the installation, it would be advisable to have a contractor run the lines inside the building. However, it is not expected that this will be necessary.
5. A wafer antenna switch was installed at the receiver for automatic switching of the antennas as the channel is selected.
6. An FM wave trap was installed at the receiver input and tuned to eliminate interference on Channel 2.
7. The results were checked the day following the installation before calling the job complete. Mr. W— viewed the reception and considered it quite acceptable. The reception was:

Channel 2 – Very good

Channel 4 – Very good – light reflections noticeable at close viewing distance.

Channel 5 – Excellent

Channel 7 – Excellent quality. There is a tendency become unstable with excessive or insufficient contrast. This appears as a slight distortion in the picture. It appears to be the result of using a reflected rather than the direct signal for this station. This was necessary to avoid ghosts.

Channel 9 – Excellent

Channel 11 – Very good – slight reflections noticeable at close viewing distance.

Materials used:

1 Channel 5 antenna
1 High frequency antenna
1 High-low antenna
3 12 ft. masts (standard) and mounts
300 ft. Twinex
300 ft. parallel wire line
300 ft. Coaxial line
1 Antenna switch, wafer type
1 FM wave trap

You will notice in this installation, that three separate type of transmission line were used. The parallel wire line used for the survey proved satisfactory for reception of Channels 9 and 11. A coaxial line worked out well for the combination high-low antenna which supplied reception from Channels 2, 4 and 7. Channel 5, however, gave considerable trouble, resulting in the final choice of the balanced Twinex line.

Note also that all lines are run outside of the building down to the floor where the receiver is located. It is noted in the report that an alternate, recommended routing would be inside of the building. It is possible, but not certain, that better results might be obtained. For this alternate routing, which at this location would be carried out by a contractor, it would be desirable to use coaxial cable for all three transmission lines.

INSTALLATION IN A D-C DISTRICT

12-5. In many communities, there are areas where the available power supply is d-c. This may be encountered in midtown areas in older sections of the city. However, you may run into such a situation unexpectedly in areas where you know that neighboring buildings have a-c supply. One reason for this discrepancy is that some buildings supply their own electrical power. There are other buildings in which both d-c and a-c outlets are available. Usually, the d-c outlets are of the polarized type into which the ordinary line plug will not fit. But you cannot depend on that.

To plug an a-c instrument, such as the television receiver, into a d-c power supply can result in considerable damage – certainly the transformer primary would be burnt out. The best way to be *sure* of the type of power supplied by an outlet is to test it with your neon tester. Both plates of the neon lamp will glow for a-c, while only one plate glows when the voltage applied is d-c.

Of course, an inverter is necessary for the installation of a television receiver in a d-c locality. Otherwise the installation is not much different from an a-c installation in the same locality.

Here is a report of an installation in a d-c area:

INSTALLATION REPORT – D-C AREA

	Hours		
	Travel	*Work*	*Mileage*
Conducted survey and installed receiver	.5	3.0	5

Only d-c available. Customer provided a Cornell-Dubilier inverter. The landlord would not permit an external mast and antenna, since it would deface the appearance of the building (so he claimed). Surveyed the entire apartment, but signal was weak. Set up a twin lead dipole on a 2 x 4 inch timber on the roof, with 50 ft. twin lead transmission line to the apartment. Since this did not change the building skyline, it was acceptable to the landlord.

The desired picture width was not obtained, even with the inverter voltage output at the medium or high positions. The inverter noise was noticeable in the picture. Suggested that the inverter be moved farther from the set, to another room. This was done. The noise was reduced, but was still noticeable. Explained that we were not responsible for inverter, and explained the need for one with a higher power output.

Aside from inverter noise and reduced picture width the reception was satisfactory on stations checked. These were:

Channel 2 – Good, with slight reflections.

Channel 4 – Good

Other stations not on the air when tests were made.

Aside from the trouble that can be encountered with an inverter, this report points out a possible answer for the "no antenna" problem. Where the landlord's only objection is to the appearance of the outdoor mast and antenna, the twin lead dipole installed on the roof or attic in such a manner that it does not show from the outside of the house may be acceptable to the landlord – and it may furnish enough additional signal pick-up to give acceptable reception. The additional source of noise and the power limitations, found in most devices for converting d-c to a-c in the home, make it particularly important to deliver a strong signal to the television receiver.

DEALER DISTRIBUTION SYSTEMS

12-6. A dealer, in order to demonstrate his receivers properly, must have a number of sets connected to an antenna system so that any one or several of them at the same time may be operated as desired. The same problem is presented in homes where the customer wants to install two or more television receivers. It is possible to operate a number of receivers from the same antenna or antenna system, but there are a number of problems involved.

The basic problem is to match the receivers to the transmission line in such a manner that: (1) sufficient signal is delivered to each receiver for its proper operation; (2) energy is not reflected back in the transmission line to form line bounce reflections that show up as ghost in the picture; (3) the receivers are isolated from each other so that the operation of one will not affect the operation of the others.

The use of matching resistors can solve this problem reasonably well where the signal strength is high and where only a limited number of receivers, up to seven, are connected to one antenna. Where it is necessary to operate a great many receivers we use the Antennaplex system, which includes amplifiers to bring the signal strength up to a level that will furnish sufficient power for the operation of the greater number.

Resistor Distribution Systems. – When a single receiver is connected to a 300 ohm parallel wire transmission line it is matched to the line because the receiver input resistance is also 300 ohms. Under this condition a signal in the line on reaching the receiver input circuit is completely absorbed and none of it is reflected back up the line. As far as the line is concerned, it does not matter how many receivers or what type of resistor network it terminates in, just so the line looks into a terminating total resistance of 300 ohms, or reasonably close to that value.

The actual receiver input circuit shown in Fig. 12-21 (a), is essentially the loaded primary of the r-f transformer, and has an input impedance of 300 ohms. We could replace this with a 300 ohm resistor, as in Fig. 12-21 (b), which would be an equivalent circuit as far as the line is concerned and would be just as good a match. Since the line impedance and its terminal load match, all of the signal energy is delivered to the load.

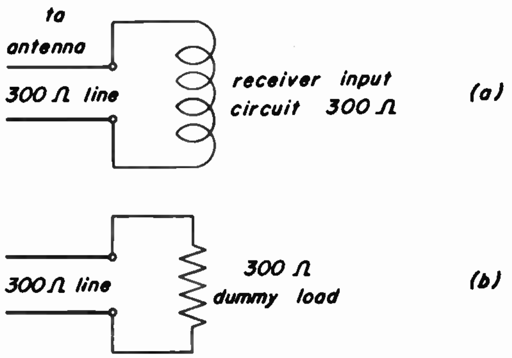

Fig. 12-21

If we were to connect two receivers without any matching resistors, the line would no longer terminate in a 300 ohm load. Two receivers, each with an input of 300 ohms, if connected in parallel, would give an equivalent resistance of only 150 ohms. In this case, only part of the energy would be absorbed, and some would be reflected back up the line to show up in the picture as line bounce reflections. Resistors must be added in the leads to each receiver to obtain the proper match. By adding a 150 ohm resistor in each lead, as in Fig. 12-22 (a), each receiver circuit now has 150 + 150 + 300 = 600 ohms connected to the line. Since the circuits for the two receivers are in parallel, the total resistance of the load at the termination of the line is ½ x 600 or 300 ohms, as shown in Fig. 12-22 (b). The actual and equivalent circuits for two receivers are like this:

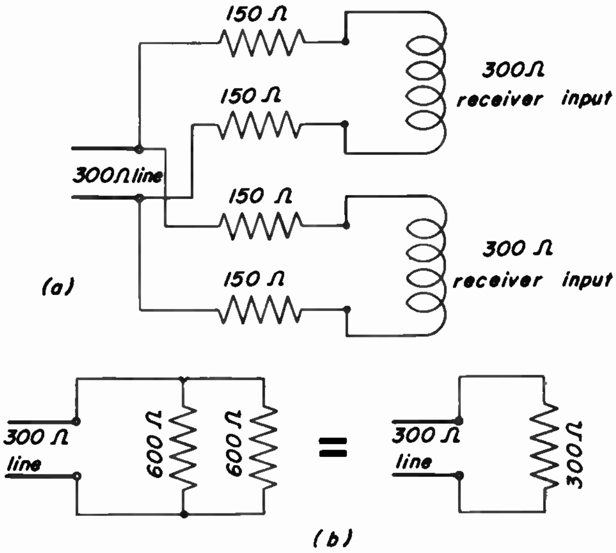

Fig. 12-22

In this way, by adding the proper value of resistance in the leads to each receiver, we have adjusted the circuit to match the 300 ohms of the line. All of the signal energy will now be absorbed, but not all of it goes to the receivers. Since each receiver has a total of 300 ohms in series with its 300 ohm input circuit, only one half of the signal voltage delivered by the transmission line will be available at the receiver input terminals. The remainder is absorbed by the resistors.

In the same way, the proper value of resistance to use in each lead can be determined for 3, 4, 5 or more receivers. The more receivers in the system the larger the value of resistance required in each lead, and the lower the signal voltage supplied to each receiver.

There are three general types of dealer distribution systems for multiple receiver installations, which we shall describe now. These include two similar types of television demonstration antenna systems that are both central distribution systems, and a television distribution system with outlets tapped along the transmission line.

Television Demonstration Antenna System "1". – This system is designed for multiple operation of receivers that have balanced input impedance of 300 ohms. The receivers may be operated individually or simultaneously. The system consists of a television antenna that is connected to a distribution box by the required length of parallel wire transmission line. The distribution box, located at a central point, divides the signal obtained from the antenna among a number of outlets in the box. Each

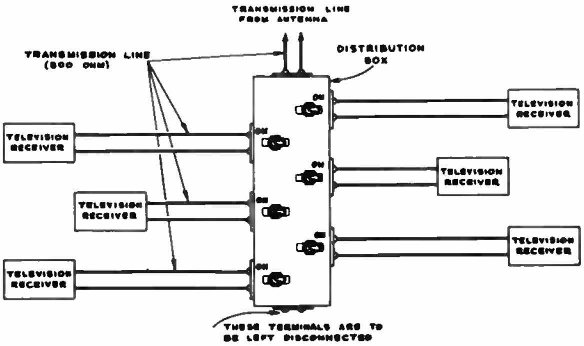

Fig. 12-23

of these outlets provides a television signal for a receiver.

OFF-ON toggle switches are provided in the distribution box, adjacent to each outlet. While the distribution box has place for six outlets and switches, the number usable in a particular installation depends on the signal strength available.

A minimum signal strength of 500 microvolts is necessary for operation of each receiver. If more than 3,000 microvolts of signal, as measured with the survey receiver, is available from the transmission line, all six outlets can be used. If less than 3,000 microvolts is available, the outlets on the distribution box should be reduced accordingly. The receivers to be operated are connected to the distribution box by parallel wire line.

The matching resistors are wired into the distribution box at the time of installation, in accordance with the number of outlets to be used. A resistor is connected to each outlet lead to form the series-parallel type of circuit shown in Fig.12-22. As previously noted, for two receivers (that is, two outlets on the distribution box), four resistors are used, each of 150 ohms.

For other numbers of receivers the correct resistor values are:

Number of Receivers	Resistor Value	Number of Resistors
3	300 ohms	6
4	450 ohms	8
5	600 ohms	10
6	750 ohms'	12

With a toggle switch in the ON position, a television signal is provided from the corresponding outlet to a connected receiver. For all receivers not connected or turned on, the toggle switches in the distribution box must be in the OFF position. In this position a dummy load of 300 ohms, equivalent to the input impedance of the receiver, is inserted into the system. This is necessary to prevent an unbalanced condition. Failure to do so can result in noise, decreased signal or severe reflections in the signal furnished to other receivers connected in the system.

Television Demonstration Antenna System "2". – This is similar to System "1" except that the switches and dummy loads are removed from the distribution box and are placed in individual load boxes that can be located at the receiver location. With this arrangement the line is connected to the receiver by means of the switch in the load box at the receiver location. This system, therefore, is easier to operate than System "1", where the switches are all at the central distribution box.

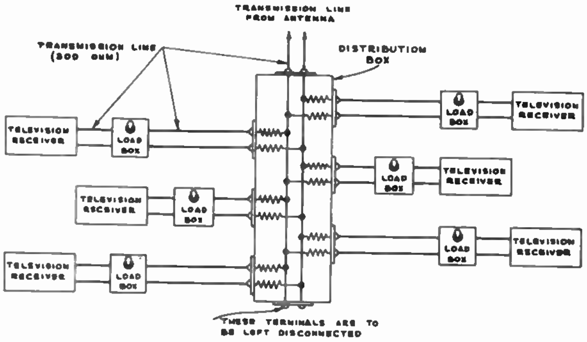

Fig. 12-24

Distribution System with Outlets Tapped Along the Transmission Line. – In many locations there is need for a distribution system in which outlets may be tapped in along the transmission line, instead of distributing from a central point as in Systems "1" and "2". A system has been developed which has identical loss with the central point system and provides equal voltage at all outlets. Since the system frequently results in the use of less transmission line, there is a saving in installation time.

In this system, there are a number of boxes with resistor networks which enable a receiver to be tapped into the line and still maintain the terminating impedance of 300 ohms, looking into the system from the antenna side. A schematic of the system is shown in Fig. 12-25.

Boxes numbered from #2 to #7 are made up with the required resistor networks as indicated in the schematic. For 7 outlets, all of the numbered boxes from #2 to #7 are used. For fewer outlets, the higher numbered boxes are eliminated. For example: for 6 outlets, boxes from #2 to #6

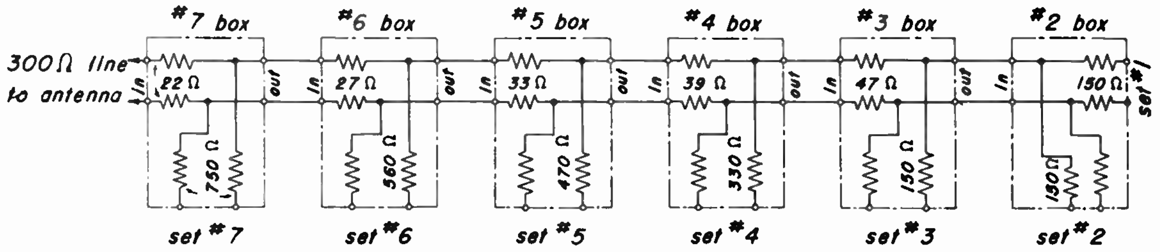

Fig. 12-25

would be used and #7 would be eliminated; for 4 outlets, boxes from #2 to #4 would be used and and boxes #5 to #7 would be eliminated. The transmission line from the antenna enters the system at the highest numbered box. For outlets less than 7, the boxes closest to the antenna end are eliminated in order.

As long as a proper resistance network is maintained, it is possible to use elements of the above system in conjunction with the central type distribution boxes. For example; if you want to use a system having six outlets, with the first two along the line and the remaining four distributed from a central point, you can use a #6 and a #5 box and connect the output of the latter box to a four terminal distribution box of either System "1" or System "2". Many other combinations are possible, a few of which are shown in Fig. 12-26.

If a receiver is not connected to any outlet in any of the above combinations, it is important that the outlet be terminated in a dummy load of 300 ohms, just as explained for the central distribution systems. In the tapped line system boxes #2 to #7 can be made up by wiring the proper resistors into the right type junction box.

Only seven outlets are shown in the system. For a larger number of receivers reduced signal and interference problems may result. Of course, two or more complete systems using separate antennas could be used, or an Antennaplex system could be installed.

ANTENNAPLEX INSTALLATIONS

12-7. While the responsibility of the television installation man is usually confined to connecting a receiver to an Antennaplex system that is operating, it is well to look over the basic elements of the system to get a better understanding of the matching problems involved.

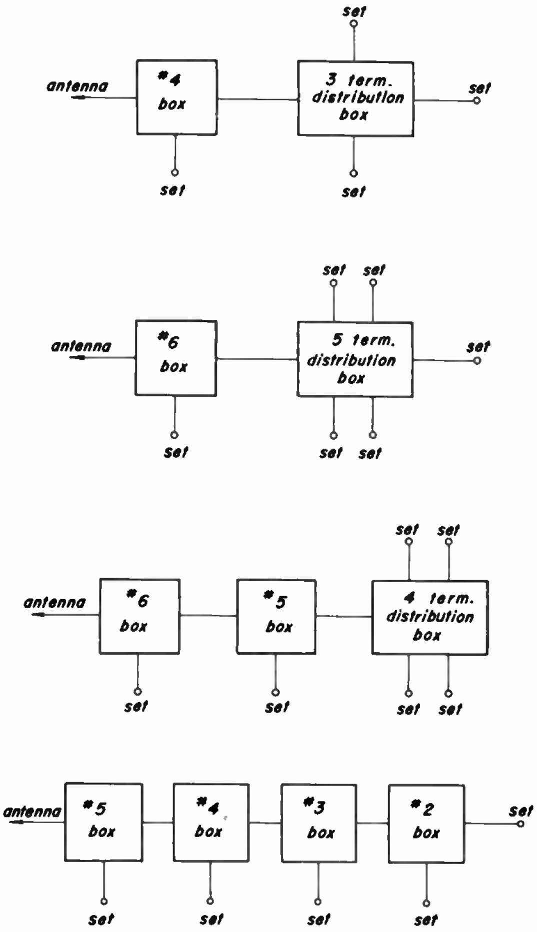

Fig. 12-26

The Basic Antennaplex System. – The basic elements in an Antennaplex system are shown in the functional schematic of Fig. 12-27. The

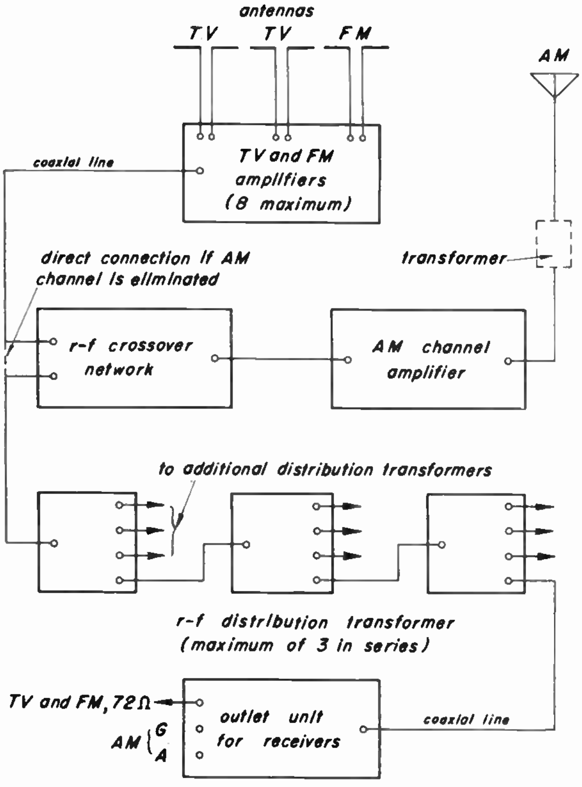

Fig. 12-27

system consists of (1) antennas, preferably but not necessarily one for each TV channel and one for the FM channel and a separate standard broadcast AM antenna; (2) transmission lines to the corresponding amplifiers; (3) a distribution network to carry all signals to terminal outlets at the receiver locations.

A cabinet assembly to contain the amplifiers is usually installed on the roof or top floor, near the antenna. It contains a television amplifier chassis upon which can be mounted up to eight channel amplifiers, an AM amplifier for use when broadcast reception is desired, and a power supply to operate both.

Mounted on the television amplifier chassis are: (1) a filament transformer for supplying filament current to the various tubes of the channel amplifiers; (2) an antenna input terminal board having provision for equalizing levels and matching antennas to various channel amplifiers or group of amplifiers; and (3) an output transformer for matching the combined outputs of the various channel amplifiers to a 72 ohm coaxial cable for signal distribution.

The broadcast amplifier chassis consists of a three stage broadband amplifier, 72 ohm unbalanced input and output, and a filament supply transformer. Provision is made for wave traps to attenuate unwanted or high level signals in the broadcast bands. The chassis also includes an r-f crossover network to permit the combining of the outputs of both the AM and television amplifiers for distribution over a single transmission line.

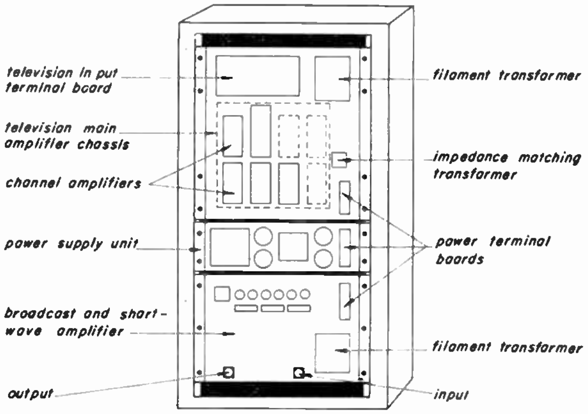

Fig. 12-28

Cabinet assembly for Antennaplex equipment

All channel amplifiers are designed to operate from balanced two wire (parallel wire) transmission line from the antenna. Where coaxial line is used, matching or elevator transformers must be installed at the corresponding amplifier. The amplifiers have a fixed stage gain, determined by the circuit constants. There is no adjustable gain control. The gain cannot be increased, but loss pads can be added to attenuate the input to any amplifier.

Distribution Systems. – Two general types of systems can be used to distribute the signals from the amplifiers in the cabinet assembly to the receiver outlets throughout a building installation. In most installations, a transformer system is used. The general layout of such a system is shown in Fig. 12-29. The alternate system is the modified transformer or bridging type shown in Fig. 12-30.

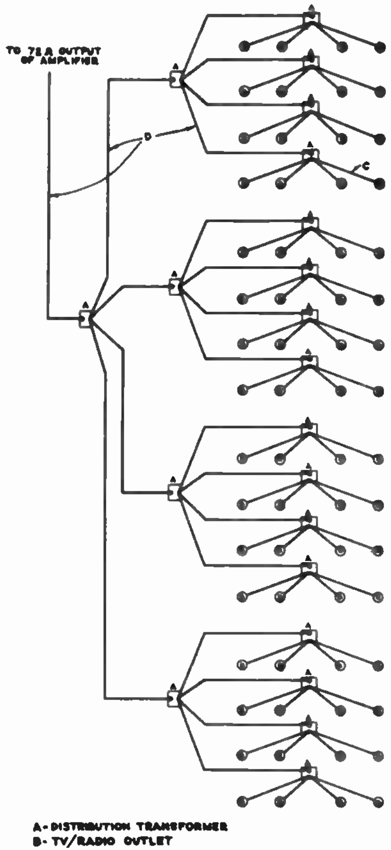

Fig. 12-29

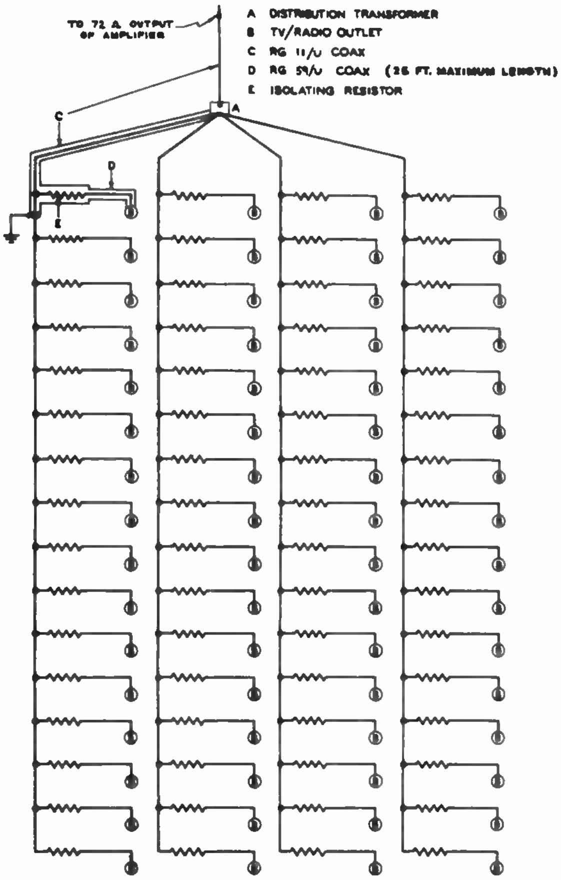

Fig. 12-30

In the *transformer system*, distribution is provided by a network of transformers. In the modified transformer, or *bridging system*, part of the distribution is provided by transformers, then this is extended to accommodate a greater number of outlets by means of a resistor drainage network somewhat similar in principle to the dealer distribution systems previously discussed.

Both systems require the use of distribution transformers and customer wall outlets.

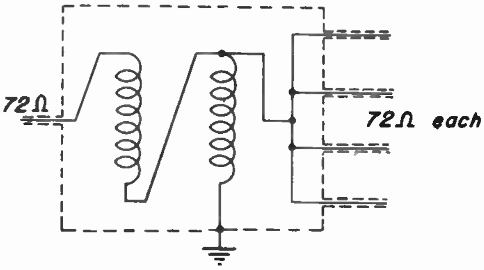

Fig. 12-31(a)

The distribution transformer, shown in Fig. 12-31 (a), is essentially an autotransformer with a two-to-one step down in voltage, which corresponds to four-to-one in impedance, so that it will operate from an unbalanced 72 ohm input to four outputs. The frequency characteristic of this transformer is quite flat over the low frequency TV channels, but drops off somewhat on the high channels where the output may be down as much as three-to-one. The transformer is indicated in the system as "A".

The customer wall outlet, shown in Fig. 12-31 (b), may be one of several types. The basic unit for the transformer system has a 10 or 15 db attenuation, depending on the value of resistor R2 in the filter circuit of Fig. 12-31 (b). The bridging type has approximately 6 db attenuation. The capacitors and inductors form a high pass filter, rejecting frequencies below 30 megacycles. This makes necessary a separate output, J-2, for AM reception.

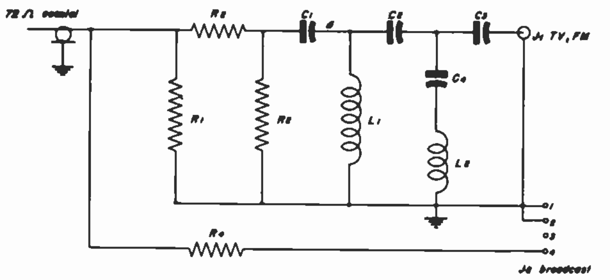

Fig. 12-31 (b)

Distribution Type	Outlet Type	R_1	R_2	R_3	R_4
Transformer	1	100	75**	100	1000
Bridging	2	100	47	100	1000
Extension*	3	—	—	—	1000

* Transmission line connects to J_1 directly. The capacitors and chokes are not used.
** Two 150 ohm resistors in parallel.

The receiver matching transformer, (type 2), is a 72 ohm unbalanced to 300 ohm balanced matching transformer for use in connecting 300 ohm balanced input receivers to the 72 ohm unbalanced Antennaplex outlet. *It is essential that this transformer be mounted directly on the television chassis*, and that the leads (300 ohm parallel wire line) to the receiver input terminals be made as short as possible to reduce direct pickup. In some cases it will be necessary to use Twinex for this lead.

Of course, this transformer is not required in connecting to receivers that provide for an unbalanced input of 100 ohms or less. In this case connection to the 72 ohm output of the Antennaplex outlet can be made directly without upsetting the system or producing ghosts in the receiver. In the event that a better match is necessary and *sufficient signal is available*, the desired value of resistor needed to bring the receiver load to about 72 ohms can be inserted across the receiver input terminals.

Connecting TV Receivers to the Antennaplex System. – For an Antennaplex system that is properly installed and is delivering sufficient signal to the customer wall outlet, the connection of a receiver is a simple matter, except in those cases where direct signal pickup at the receiver location results in a leading ghost in the picture. Of course, if something goes wrong with the Antennaplex system, that is an entirely different matter.

Since the maximum signal delivered at the Antennaplex outlet, in some locations, may be insufficient to over-ride direct pickup, it is necessary to check the degree of direct pickup at the receiver and plan the installation accordingly. Find out what signals can be picked up without an antenna of any kind. This holds for AM as well as TV. The results obtained from this check will determine the procedure to follow in using or eliminating such direct pickup.

On combination receivers, it is a good idea to check the operation of FM and AM on an in-cabinet antenna or a twin lead folded dipole, as a basis for possible alterations in the input connection to these circuits. *If any alterations are made to the circuit of any chassis or the interwiring, a tab should be attached indicating the changes made and their reason – "For connection to Antennaplex".*

Recommended Procedure. – The following is the recommended procedure in connecting television receivers to an Antennaplex outlet:

1. Determine the extent of direct pickup with the receiver input terminals open, no antenna, at the spot where the receiver is to be located. If you can sync a picture on any channel, it is doubtful if the signal level on the system will override the direct pickup. The direct pickup arriving ahead of the signal from the Antennaplex system will be noticeable as a *leading ghost* in the picture.
2. If this happens, shielding will have to be supplied to the receiver. One or possibly more of the following corrective procedures may be required. These are usually effective in the order given: (1) Mount a receiver matching transformer, MI-6876-2, directly on the receiver chassis, in the case of a receiver with 300 ohm balanced input, and connect not more than a 3 inch length of parallel wire line jumper to the receiver input terminals. (Note: this step is not needed in receivers with an elevator transformer input.) (2) if direct pickup is still strong, proceed with step 3. But if the direct pickup is now down to a point where it is not objectionable, run a length of RG-59-U cable to the outlet. *Do not connect it.* Check for pickup on the RG-59-U with the cable connected only at the receiver. If direct pickup is strong, positioning of the cable may reduce the pickup. If not, the receiver will have to be moved to a location where pickup on the RG-59-U cable is not objectionable. One possibility may work out in these cases. Mount the receiver matching transformer at the Antennaplex system outlet and run Twinex directly to the receiver input terminals, "T_1". Ground the Twinex shield to the receiver chassis.
3. Replace the parallel wire line jumper from the receiver matching transformer, (mounted on the receiver chassis) with Twinex and ground the Twinex shield.

4. Shield the bottom of the receiver chassis.
5. Shield the top of the r-f section of the receiver.
6. If the above steps will not remove direct pickup, the receiver will have to be moved to a different location in the room or apartment.

Connecting TV–FM–AM Combination Receivers. – The precautions and remedies listed above hold for the TV connection in combination receivers. Here, direct pickup may be greater than in TV receivers since there is an appreciable amount of parallel wire line inter-chassis connection leads. The thing to do is to replace as many as necessary of these with Twinex, with the Twinex shield grounded to the chassis.

Adjustment for FM reception will depend on what changes were made to obtain satisfactory TV reception. If it has been necessary to connect the Antennaplex output directly to the TV chassis, an inside folded dipole or coupling to the power line through a 150 mmf capacitor will usually do the trick.

For AM reception, we must first consider the connections made for the TV and FM sections of the combination before deciding on additional steps. Since there is a high pass filter in the Antennaplex system outlet for TV-FM, cutting off at 30 megacycles, there are separate AM terminals labeled "BROADCAST" connected ahead of this filter.

Check first to see whether direct pickup from the a-c line, interwiring or other parts of the receiver gives sufficient noise free reception. If direct pickup is not sufficient, a separate RG-59-U coaxial line must be run from the Antennaplex system AM outlet to the radio chassis "A" band coil. Normally it is necessary to cut the primary coil of the "A" band loose from the switching circuit and connect it permanently to this separate coaxial line. Since there is some variation in circuit connection in different model receivers, it is necessary to inspect the chassis wiring to determine the best method for making this connection.

◆

NOTES

NOTES

NOTES

NOTES

TELEVISION SERVICING COURSE

PREPARED BY

RCA INSTITUTES, INC.

A SERVICE OF RADIO CORPORATION OF AMERICA

HOME STUDY DEPARTMENT
350 West 4th St., New York 14, N. Y.

LESSON THIRTEEN

INTERFERENCE, NOISE AND GHOSTS

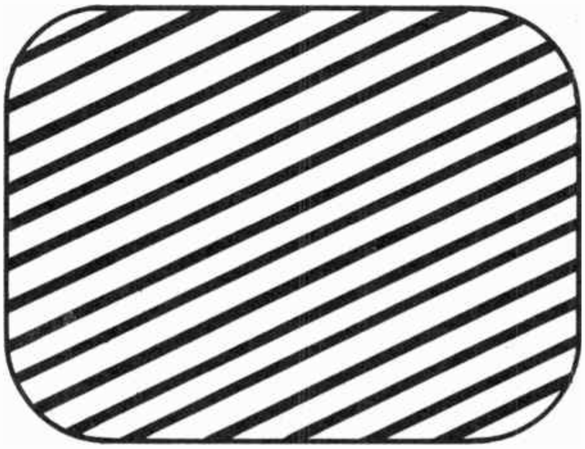

Lesson 13

THE INTERFERENCE PROBLEM

13-1. Does it seem odd to you that an entire lesson is devoted to the study of interference, noise, and ghosts? It need not, for troubles due to these causes are already adding wrinkles to the brows of responsible men throughout the entire radio industry, let alone television. And in the television branch of the industry, certain factors make the situation all the more troublesome. This means that as a responsible man in the installation end of television, you have a share of the headache. This Lesson is designed to acquaint you with the general nature of interference and noise problems (you already know a good deal about ghosts), and tell you how to recognize and handle them. More specifically, it is meant to tell you how to distinguish the problems you *can* handle from those that are too tough for installation men, and what to do about each type.

You'll also get ideas from which you may form your policy toward delicate interference problems (since you must conform to some policy), and some knowledge of customer and public relations problems that can result from interference and noise difficulties. Don't let these ideas disturb you, because no one is going to expect miracles, either in the matter of interference elimination or the removal of customer dissatisfaction. Admittedly, interference and noise are serious problems, that probably will get worse before they get better. But if you absorb what is in this Lesson and apply it intelligently, you'll have little to worry about.

What Is Interference? – A really strict definition of interference might be a pretty hard thing to write, because various parts of the radio industry are not agreed on just where interference leaves off and noise begins. However, we need not be very fussy about this point, as we're going to cover both troubles in this Lesson. Nevertheless, for purposes of discussion it will help to have some reasonable dividing line between the two, so let's use the following descriptions as starting points.

An *interfering signal* is a train of electromagnetic waves of some fairly definite fundamental frequency, with or without related harmonics or sidebands, that is capable of producing an undesired effect in the television receiver sound or picture.

Noise is an electromagnetic wave disturbance of a less definite sort, usually recurring as a series of bursts or pulses of energy containing a very large number of more or less random frequencies spread over a considerable part of the radio spectrum.

Almost always, apparatus capable of generating interfering signals is under the control of an operator, and is legally authorized to operate on the fundamental frequency. This is so, even as regards apparatus not actually meant to radiate such energy, such as diathermy and r-f heating machines. Also, such equipment may actually be operating *within* the basic requirements of the present FCC regulations, and still produce interference in nearby television sets. We'll go into the reasons for this state of affairs just as soon as we've had a look at a general idea about interference that will help you in thinking about television interference in particular, later on.

Selectivity Characteristics of TV Receivers. – Probably you've wondered just how a television set, or any other radio receiver for that matter, is made to accept the particular signal we want to receive , and more or less successfully reject all the others. You know it has tuned circuits, but just saying that doesn't make very clear what actually happens when several signals of comparable strength but different frequencies arrive at the input terminals of a receiver. How and why tuned circuits operate to accomplish this job of selection will be taken up in detail in Lesson 18, in which we will discuss the basic principles of resonant circuits. However, we can get a fair practical idea of their operation right here that will serve for the present.

Suppose we consider first certain characteristics of radio receivers generally. In the early

Auto ignition

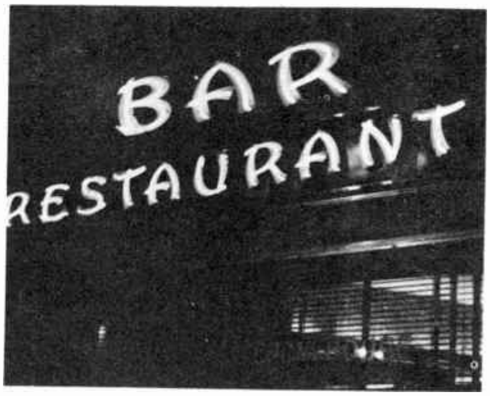

Neon signs

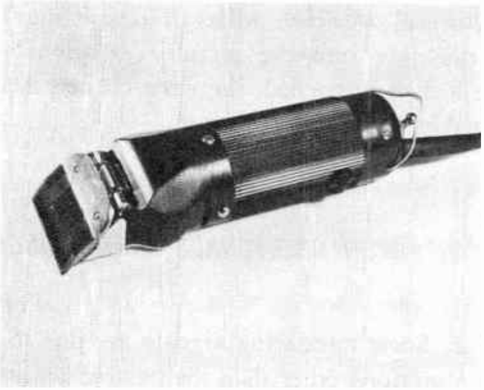

Electric shaver

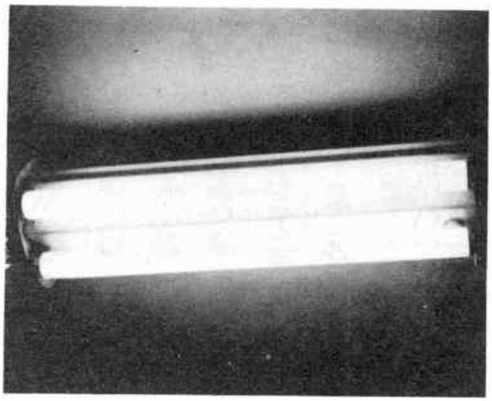

Fluorescent light

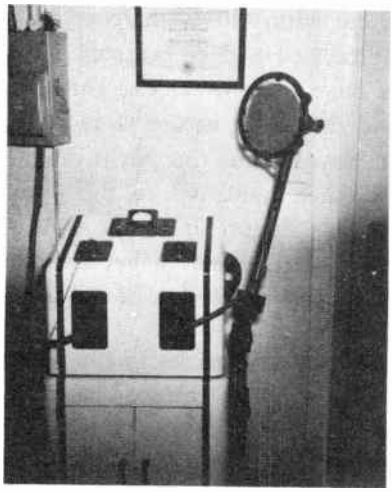

Diathermy machine

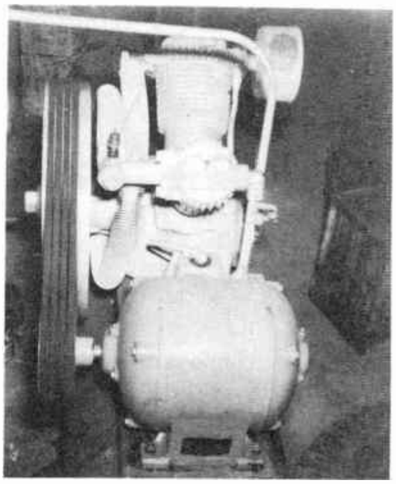

Electric motor

Fig. 13-1 Sources of interference

part of this Course you learned that television signals require a much wider band of frequencies than regular AM broadcast signals. In communications work on the other hand, it is possible to use a relatively narrow band of frequencies, for reasons we won't go into just now. Obviously, a receiver for *any* service must accept the *entire band of frequencies sent out from the transmitter,* if it is not to alter the program material in receiving it. It's also obvious that *it need not accept a band of frequencies any wider than the band transmitted,* and in fact, passing a wider band might actually lead to trouble if there is another station transmitting on a frequency very near to the one we are tuned to.

The sensible thing to do, then, is to design the receiver so that it will just accept and pass through itself the whole band of frequencies transmitted by the desired station. In communication receivers, this pass band may be anywhere from 50 to as much as 5000 cycles wide, while in good receivers meant for broadcast music, the pass band should be at least 10,000 cycles (10 kc) wide. But for a television receiver, the pass band must be 6 *megacycles* wide! Now, it's clear that the tuned circuits in a television receiver have to be rather special, if they're to pass all the frequencies in a 6 mc slice equally well, and refuse to accept frequencies just outside the pass band.

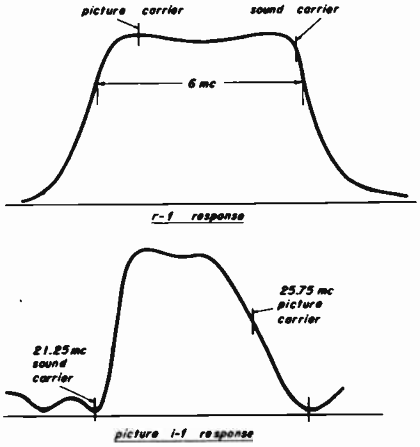

Fig. 13-2

In practice, it's impossible to produce tuned circuits that totally refuse signals close outside the pass band. In well designed receivers, the response of the tuned circuits falls off rapidly outside the pass band, but *does not drop to zero,* even at frequencies far removed from the pass band. When you study tuned circuits in Lesson 18, the reason for this will be made clear. But for now, it will suffice to remember that it is so.

The result is that if a signal outside the pass band is strong enough, it can still show up in the output of the receiver. If this happens in an AM broadcast receiver, the ear will often tolerate the resulting interference, if it is not excessive. But in a television receiver, an interfering signal mangles the picture even more than the sound, and the human eye is much less tolerant of defects than the ear is. All of which means that a given proportion of interfering signal causes more trouble in television reception than in straight broadcast listening.

Now add on another trouble resulting directly from the much greater bandwidth of television receivers. This difficulty lies in the fact that the wider the band passed, the greater chance there is that some spurious or accidentally produced radio signal or noise will fall inside the band, and thus get into the picture. Obviously the wider a door is opened, the more chance there is for random raindrops to blow in.

HOW INTERFERING SIGNALS ARE PRODUCED

13-2. Some interfering signals are due to television stations other than the desired station, or to certain circuits in other television receivers. However, a large proportion of the actual signals that interfere with television reception are accidentally produced and/or radiated by the transmitters of other radio services. This comes about because of the basic nature of radio waves and circuit phenomena, and the way in which frequencies have been assigned to the various radio services. This is so important that it's worth taking some extra pains to get straight, so put down that ukulele and follow closely.

Consider first the matter of the circuit phenomena. In producing the assigned carrier frequency that a transmitting station is authorized to radiate, practical circuits also generate some other frequencies, because of a property known as *nonlinearity.* This merely means that the circuit element described as *non-linear* does not conduct current as well in one direction as in the opposite direction, or does not pass exactly double the amount of current when the voltage applied to it is doubled. Lessons 16 and 19 will go into the theory of this, but for now, all you need to remember is that many of the circuit components used in radio transmitters and receivers (vacuum tubes, germanium diodes, etc.) necessarily have this property. Now, when a pure, single frequency a-c current is applied to a non-linear device, it comes out neither pure nor single. Instead, it comes out with a number of new frequencies that are direct multiples of the original frequency, often with rather serious results, so far as interference problems are concerned.

Harmonic Generation. – Suppose for the sake of discussion we consider a pure a-c wave at a radio frequency of 10 mc, applied to a non-linear device. We will get out the other side not only a wave of the original 10 mc frequency, but also some radio energy at whole number multiples of 10 mc, such as 20 mc, 30 mc, 40 mc, etc.

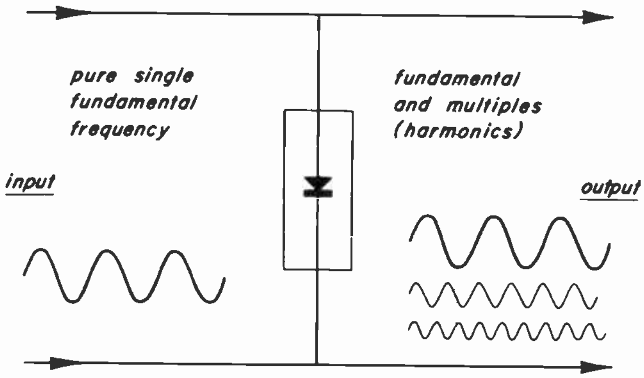

Fig. 13-3

The strength of each of these new frequencies (called *harmonic frequencies)* in proportion to the strength of the original 10 mc input wave and to each other will vary with the nature of the non-linear device. In general, the harmonic of lowest frequency will be strongest, followed by the others up the spectrum from the 10 mc original wave, which is called the *fundamental* frequency. Oddly enough, the fundamental is also regarded as being the first harmonic of itself, which need not cause any confusion if you will immediately forget about it, and merely call the 20 mc frequency the *second* harmonic of the 10 mc fundamental frequency. Correspondingly, the frequency three times as great as the 10 mc fundamental is called the third harmonic, the 40 mc output is called the fourth harmonic, and so on.

By now, even you fellows shooting craps in the back row should be able to see that this harmonic generating effect of non-linear a-c circuit elements can cause some radio frequencies to come out of transmitters and other devices, that the designer didn't particularly want. Also, it ought to be pretty clear that some of these harmonic frequencies may be radiated, and wind up in a receiver tuned to some other radio service. This exasperating phenomenon is the cause of a large proportion of the interference difficulties of all radio services. This is particularly true in television, where receiver bandwidth and sensitivity make a big target for the unwanted harmonics.

Assigned Frequencies. – Later we'll see that still more complicated interference can arise from this same cause, but right here let's pause a moment and take a look at the frequencies assigned to various radio services, so we can see how this affects the harmonic interference problem. The lowest frequency in practical use for radio communication purposes is about 15 kilocycles. In the portion of the frequency spectrum between 15 kc and 535 kc there are literally dozens of different radio services of various sorts carrying on their regular business. Yes, they have some harmonic output, and if you live near one of the transmitting stations, you may have heard some interference in the broadcast band from this source. However, don't forget that the harmonics of these low frequency stations above the second are generally not radiated very strongly, and hence are unlikely to cause serious interference. As an example, consider a ship at sea off the coast calling a shore radio station on the International Distress and Calling frequency, which is 500 kc. If the ship's transmitter is radiating quite a bit of energy at its second harmonic frequency of 1000 kc, and your broadcast receiver is tuned to a broadcast station assigned to that frequency (such as KOMO in Seattle, or WHWB in Rutland, Vermont), you're likely to hear Morse code ripping right through Jim's Other Wife's Other Husband, or whatever program is on at the time.

However, 1000 kc is a long way below even the lowest frequency television channel, and even if we considered the *tenth* harmonic of the ship's 500 kc fundamental, we'd only come out at 5,000 kc. And needless to say, the tenth harmonic of even the worst transmitter is usually weaker than a politician's promise.

Next above the 15 kc to 535 kc band comes the standard AM broadcast band, extending from 540 to 1600 kc. The transmitters on this band are rather special, and in general are well designed and maintained, with the result that their harmonics are pretty weak in proportion to the fundamental, although as we'll see later, this doesn't necessarily mean they can't cause trouble, even 'way up at the television frequencies. Usually they don't, so let's jump to the top of the broadcast band at 1600 kc, and see what's next.

Here we find a bewildering list of radio services assigned, with no very definite separation into broad bands (such as exists in the broadcast band), although there is a certain regular alternation or succession of assignments all the way from 1600 kc on up to the lowest television channel at 54 to 60 mc. The reason for the scattering and distribution of frequencies more or less evenly among various radio services in this broad range of frequencies is that the propagation of radio waves changes gradually as the frequency is increased, so that different parts of this frequency range are useful for different distances and purposes. The main point is that all sorts of radio services are assigned to all sorts of frequencies throughout this range, and as we get up to the higher frequencies, the second harmonic frequency begins to fall nearer and nearer that low television channel.

And when we get up to 27 mc, *BLOOIE!* Any apparatus generating radio frequency energy on any frequency between there and 30 mc will have a second harmonic somewhere between 54 and 60 mc, which will be pure poison for any television receiver tuned to Channel 2, if the harmonic is strong enough at the receiving location. And all too darned often, it is. Incidentally, this is not to suggest that *only* the second harmonic is strong enough to cause trouble. If the transmitter is very powerful – and many in long range services is putting 10, 20, 50, even up to 200 *kilowatts* of energy into the transmitting antenna – harmonics as high as the eighth or tenth may cause trouble in nearby receivers. This can happen even if the transmitter is well designed and maintained, for even 50 kilowatts is more than 66 horsepower of radio energy, and it doesn't take a very big fraction of this to put a few *microvolts* of interfering harmonic into a television receiver antenna, or directly into the receiver itself, for that matter.

In practical work, this means you've got to keep in mind the possibility of interference from apparatus 'most anywhere in the whole general range of frequencies below the frequency to which the receiver is tuned. Some special emphasis should be put on frequencies just one half, and probably also one third and one fourth the frequency of the television channel interfered with, because these frequencies will have second, third, or fourth harmonics that fall right into the television channel. As an example, consider an interfering signal showing up in Channel 5, which extends from 76 to 82 mc. The second harmonic of any transmitter between 38 and 41 mc will interfere, if it is strong enough. So will the third harmonic of any transmitter between 25.33 and 27.33 mc, and the fourth harmonic of apparatus operating between 19 and 20.5 mc. Diabolical, isn't it?

And Still Worse Comes. – You may think we've been pretty far out in left field, taking this long to explain how harmonics are generated. Nothing of the sort. Even if you already knew, you may be due for a few surprises in what follows. There's a good reason for having a firm grip on that stuff about non-linear devices and what they do to pure frequencies applied to them, for there's yet another effect that really puts the frosting on the cake. When *two* pure frequencies are fed into a non-linear device, we get in the output not only each of the original frequencies put in, but also several new frequencies that have direct relationships to the originals.

Two of these new frequencies are our old friends, the second harmonics of the two original frequencies put in, but there are also two newcomers that are actually the numerical sum of the two originals, and their difference. In fact, the parade gets so complicated at this point that we'd better resort to some numbers to show the relationships more clearly. Let's call the two original frequencies f_1 and f_2. Now, if we feed these frequencies into a non-linear device such as a germanium diode rectifier, connected in a circuit which does not discriminate against any of the resulting products, something like this comes out:

f_1	
f_2	
$2(f_1)$	(Second harmonic of f_1.)
$2(f_2)$	(Second harmonic of f_2.)
$f_1 + f_2$	(Sum of the original frequencies.)
$f_1 - f_2$	(Difference between original frequencies.)
$2f_1 + f_2$	(Second harmonic of f_1 plus fundamental of f_2.)
$2f_1 - f_2$	(Second harmonic of f_1 minus fundamental of f_2.)
$2f_2 + f_1$	(Second harmonic of f_2 plus fundamental of f_1.)
$2f_2 - f_1$	(Second harmonic of f_2 minus fundamental f_1.)

Actually, still more of these combinations of harmonic frequencies and sum and difference frequencies are present in the output, but this is enough to illustrate the process. Also, the amount of the other frequencies (such as $2f_1 + 2f_2$, for instance) present in the output is very small, so they usually are not troublesome. However, you can see that this process, which is called mixing, or *frequency conversion*, can give rise to a lot of frequencies that we don't want, as well as some that we *do* want upon occasion.

Incidentally, the new sum and difference frequencies produced by this mixing process are sometimes called *beat frequencies*, because the two originals are said to "beat" together in the non-linear circuit element we're using as our mixing device. The process is also called heterodyning, or sometimes cross-modulation. This last term is often used in practical work because it so aptly describes the effect produced.

In view of the facts just given, you're probably wondering how it is possible to avoid interference at all. Well, fortunately there are a few factors that operate in our favor to reduce the strength of most of these harmonics and beat frequencies enough to keep them from interfering with reception of the desired signals. You'll notice back there a few paragraphs where we described the process for generating this big family of harmonics and beat frequencies that we said the non-linear circuit element was connected in circuits that did not discriminate against any frequency. That sort of circuit was just used for demonstration, and in practical radio equipment, the circuits are almost always quite sharply tuned to pass one selected frequency or band of frequencies, and bypass the others harmlessly to circuit ground, where they can't do any harm.

Practical Radio Transmitter Circuits. – In practically all radio transmitters and other apparatus designed to generate large amounts of radio frequency power, the various circuits are designed to respond efficiently to only one frequency at a time. The vacuum tubes in the final power amplifier are often arranged in a balanced (push-pull) circuit, which you will learn later is supposed to cause cancellation of all the even numbered harmonics, such as the second, fourth, etc. However, for several reasons, such cancellation is never complete, and even if it were, the odd numbered harmonics (third, fifth, etc.) would still be present to cause trouble, *if they are permitted to radiate.*

Another difficulty in practical transmitting apparatus is caused by the fact that there are usually several stages of amplification or frequency multiplication preceding the final power stage. These preceding stages often have to be run at a respectable power level themselves. Since they are often required to double, triple or quadruple the frequency of the frequency control oscillator in the transmitter, they must generate harmonics of the original frequency fed into them. This is illustrated in Fig. 13-4.

Shielding Against Harmonic Radiation. – In most apparatus, the strength of the troublesome harmonics actually radiated from the various stages will be fairly low, but even so they can cause interference, because of the high sensitivity of television receivers, and the weakness of television signals in some areas. Much equipment capable of generating such interfering harmonics is enclosed in metal cabinets that act as shields to cut down the amount of harmonic energy radiated.

However, this kind of shielding is seldom complete, so if you find such apparatus is concerned in an interference problem, don't just assume that it can't be radiating harmonics of the multiplier stages. Interfering r-f energy can leak back into the power line, and then be radiated, or carried directly by the line itself into nearby television receivers. The real test of course is to see if the interference stops when the equipment is shut down. Obviously, if it does, you've found the source of the trouble. However, don't jump to the conclusion that the operator of the

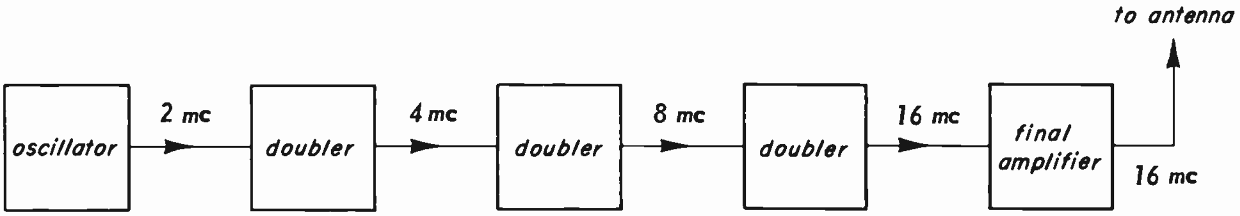

Fig. 13-4

equipment is necessarily entirely responsible. This point will be covered later, in discussing specific sources of interference. The matter has been touched on here only to illustrate the very extensive use of frequency multiplier stages in all sorts of r-f power generating equipment, and warn you about the interference possibilities they possess.

Actually, the generation of harmonic energy in these frequency multiplier stages is just another example of applying a single frequency to a non-linear circuit element. In this case, the non-linear element is the vacuum tube used in the frequency doubling circuit. Now let's see what other such non-linear devices we can discover that may cause trouble in television reception by generating unwanted harmonics.

Harmonic Generation in the Receiver. – Say! A television receiver has a lot of vacuum tubes in it, doesn't it? And didn't we just say that a vacuum tube could be used as a non-linear element? Hmm. Yes, that's right. *Interfering harmonics can be generated right in the first stage of a television receiver,* if the signal is strong enough. Let's see how this happens.

In the r-f amplifier stage of the receiver, the tube is operated under conditions that permit it to operate as a straight amplifier of incoming signals, on what engineers call the linear part of its amplification curve. The operating point is set when the receiver is designed, and in a receiver in good order, the minor differences between individual tubes are small enough so that you can feel pretty confident that the stage is operating linearly. However, don't forget that the r-f amplifier is meant to operate on the relatively weak received television signals ranging from perhaps 50 microvolts up to 100,000 microvolts or thereabouts.

What happens if a strong signal of 1 or 2 volts at, say, 27.120 mc reaches the receiver r-f amplifier tube? An r-f amplifier stage designed to handle weak signals can't possibly amplify this huge signal linearly. It becomes non-linear, and immediately generates the whole family of harmonics of the 27.120 mc fundamental. The second harmonic is 54.24 mc, which appears in Channel 2. The third harmonic is 81.36 mc, and appears in Channel 5. The fourth, fifth and sixth harmonics do not fall directly in television channels, but can cause trouble anyhow by mixing with other signals in the way we spoke of earlier. Don't forget all those sum and difference frequency combinations! The seventh harmonic falls in Channel 9, and although a harmonic so far removed from the fundamental is usually very weak, it may still be troublesome. Of course, the obvious way to get rid of these harmonics generated in the receiver r-f stage is to keep the fundamental that produces them from getting to the tube. The high pass filter mentioned in Lesson 10 does this pretty effectively, and we'll have more to say about it later.

External Cross Modulation. – Right here we've got to consider still another of these non-linear circuit elements that can occasionally cause trouble. This particular one is most troublesome because it's likely to be almost impossible to find it, or do anything about it except try to locate the receiving antenna in a more favorable position.

The non-linear element referred to is a bad connection between two conductors somewhere near the receiving location. In most cases this will not cause serious trouble, but in areas where signal strength is high, the harmonics generated by all the thousands of radio signals present can occasionally produce an interfering signal strong enough to create a definite picture defect. This is most likely to happen on the roof of buildings in heavily populated metropolitan areas, where there are dozens of "haywire" antennas strung around for broadcast and short wave reception, with the connections merely twisted together. As soon as such a connection is corroded by the weather, it becomes a non-linear element, and can generate harmonics of any strong signal picked up in the wires. Worse still, it can radiate these harmonics to other antennas nearby, often strongly enough to hamper even broadcast reception..

Once in a while you will be able to find the offending antenna wire, and either get permission to remove it, or make a proper soldered connection. However, this is a pretty difficult task if you're in a densely populated area, and usually the best procedure will be to get more of the desired television signal into the antenna by relocating or reorienting it.

Installation Interference Problems. – Now, if we were to try to cover all aspects of the interference problem, this lesson would become a small book, and you'd have to carry a cartload of special equipment around with you. Obviously this isn't practical for men doing installation work, for most of the time you won't have any use for the extra information and equipment. Instead, installation men need to know how to recognize various types of noise and interference, how to determine which kinds they can deal with, and what measures to take in dealing with them. Your knowledge of the ways in which interfering signals can be produced will help you to decide what kinds you can do something about, and which sorts will require a special crew.

YOUR POLICY TOWARD INTERFERENCE

13-3. Since interference, noise and ghosts are problems that seem destined to plague all sorts of radio systems for some time to come, if not forever, it is necessary that any responsible organization doing radio servicing have some definite policy for dealing with such problems. Now, the percentage of television receivers troubled by serious interference is not high, except perhaps in a few areas where special difficulties exist, but it should be the aim of your company to insure that annoyance to set owners from this source is held to a minimum consistent with the labor and material involved. Obviously, a line has to be drawn somewhere, but it is often surprising what can be accomplished by intelligent work and cooperation between the customer, the installation or service crew, and the people in control of the source of interference. Get that word "cooperation", because it is probably one of the most important considerations in the whole problem.

Interference Source Often Legal. – You will not be called on to contact outside parties very much in installation work, as this part of the interference problem usually has to be handled by a special service crew. However, when you discover that outside interference is really the source of the trouble, its up to you to explain this to the customer. When you do this, *you must make sure he understands that the operator of the device causing the interference is not necessarily at fault.* There *may* be some fault in the interfering apparatus which causes it to fail to comply with the FCC requirements concerning the radiation of unauthorized signals and noise, and *there may not be.*

Often it will be difficult to determine this without calling in a special interference crew. The most important point to be considered here is, *you must not bias the set owner into the attitude that his neighbor is violating any law or regulation in operating the offending equipment.* The minute this happens, and the set owner begins to feel that someone is unlawfully interfering with his reception, the chance of getting cooperation between the parties concerned becomes small. This is only human nature, but since most radio equipment is owned and operated by human beings, its up to you to have the human factor in mind all the time.

You're bound to run into cases involving two neighbors in which you feel pretty sure that the interfering device is *not* complying with the FCC regulations. However, it takes measurements with instruments to be absolutely sure of this, so you must be *tactful* and *careful* in explaining the situation to the parties concerned. The FCC regulations require that harmonics radiated by radio transmitters be at least 40 decibels weaker than the fundamental signal, and in any case not greater than 200 milliwatts.

In the case of diathermy equipment, the apparatus is not supposed to radiate a signal that is stronger than 25 microvolts per meter at a distance of 1000 feet or more. This is at present the legal requirement, but of course you have no way of determining directly whether or not any source of interference is actually exceeding these limits. And the bitter truth of the matter is that even if the interfering radiation is inside the legal limit, it can still cause troublesome interference. This is true because the regulations were set up before television service was begun, and the limits proved adequate for other kinds of radio service. It is likely that there will be some revision of the FCC requirements in the future, but of course this has no effect on your problems now.

Report Procedure. – The general procedure for you to follow when you have located a source of external interference is to explain the situation carefully to the set owner, and report the matter to your Supervisor. This should be done only after you have taken all possible steps to eliminate the trouble at the receiver, as otherwise you may cause someone unnecessary trouble and expense. You should *never* work on the interfering device yourself, nor suggest in any way that your company will do such work, unless the device is one normally serviced by your company anyhow. Such work is usually beyond your company's jurisdiction, and any mistake on your part in this respect will only have to be corrected later, with a good chance of creating ill will.

Fortunately, you'll not often be required to carry a really serious customer relations and interference problem of this sort all the way through to the finish. If interference is really troublesome, and you can't solve the difficulty with the methods available to you, the problem will have to be tackled by someone specializing in such work. Naturally it is up to the person doing that job to follow through in explaining the matter to the parties concerned. All you are expected to do is report such really serious problems to your superior.

IDENTIFYING INTERFERENCE SOURCES

13-4. The more you can learn about the interfering signal, the easier it is likely to be to identify it. After you've got it pinned down to a specific cause, you'll have a better chance to do something about minimizing or eliminating it. Even when you can't handle the job yourself, you can pass the information on to the interference specialist, so his job will be shortened.

Is Receiver the Source? – We will cover the kind of receiver or transmitter defects that can look like ghosts, noise or interference later in this Lesson. What we need right here is a test that will show whether the trouble is originating inside or outside the receiver. With that established, we can narrow the search down still further with other tests. This test is simple, and will give you a definite answer in most cases.

Disconnect the transmission line from the receiver input, short the conductors of the line (connect them to each other), and either connect them to some ground point such as a water pipe, or move the line as far from the receiver as you can. If the trouble is coming in via the antenna and transmission line, it should disappear or drop to a very low value. In most cases you will find that merely disconnecting the transmission line is enough, but occasionally this will fool you, because the interference will be strong enough to show in the receiver by being radiated from the open end of the line to the chassis.

Classes of External Interference. – Having determined definitely that the trouble is coming from outside, you can proceed with the detective work of identifying it. External interference can be grouped in a few broad classes for convenience in our study, to simplify the work a bit.

Class 1. Transmitters of other radio services, such as FM stations, regular AM broadcasting stations, shortwave AM broadcasting, commercial and military communications, amateur, and various navigation aids.

Class 2. Other television transmitters, either on the same channel, or adjacent channels, or on any other channel that can produce interference.

Class 3. Oscillators in radio receivers of all sorts, such as shortwave, FM, and other television receivers.

Class 4. Medical and industrial equipment producing radio frequency current for various purposes, such as diathermy, welding, etc.

We'll keep the various sources of electrical noise for separate treatment, after finishing with the four classes listed here. This is more convenient, because of a fundamental difference between noise and the interfering signals classified above. In general, noises are considered to be continuous or intermittently repeated disturbances that cover a very wide band of frequencies. They are not usually affected much by adjustment of the fine tuning control, and commonly cause trouble on several television channels at once.

This is not the case with interfering signals in the four classes mentioned above. They have a definite fundamental frequency, and often (alas!) several harmonic frequencies, any or all of which may turn out to be causing the trouble. They usually show changes in picture effects with adjustment of the fine tuning control, and usually affect only one or two channels.

Examples of Class 1. – Let's start at the lower end of the frequency spectrum, bearing in mind what was said about harmonics, and the ways in which they can cause trouble. A look at the FCC frequency assignment table reveals that there are literally thousands of transmitters in various commercial, amateur and military communication services assigned to frequencies all through the range from 2.0 to 54.0 mc, where the lowest television channel begins. Also, there are all the standard broadcast stations, and below the regular broadcast band, still more communication and direction finding transmitters.

Fortunately, we're not likely to be troubled by more than one or two of these transmitters, for only the low numbered harmonics (second, third, and fourth) are likely to be strong enough to give trouble except very near the transmitter. Transmitters on frequencies below 13.5 mc can only interfere with their fifth or higher numbered harmonics, unless there is cross modulation of the sort described in Section 13-1. This is only likely when the troublesome signals are quite strong, which usually means that at least one of the transmitters concerned is fairly close to the receiver. If this is the case, you probably will know about possible interference from that source, from previous experience. However, it is worth while to check with your office by phone, if conditions near the receiver location are not well known to you.

Let's suppose for the moment you're getting external interference that looks like one of these pictures:

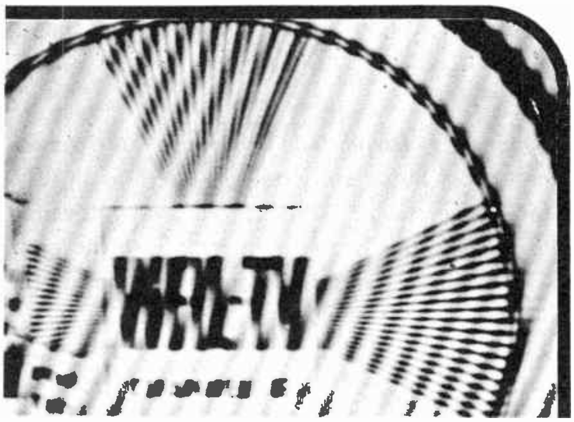

(a) Interfering signal about 500 kc away from the station's carrier frequency.

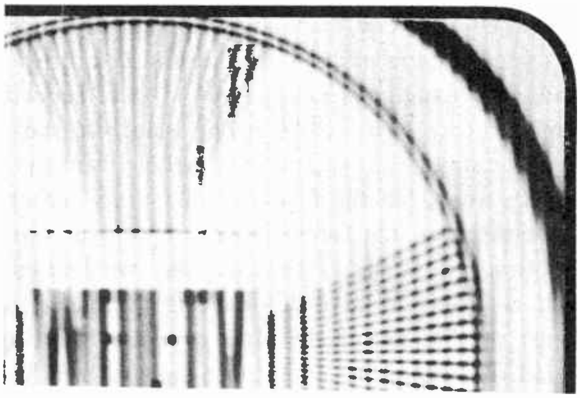

(b) Interfering signal about 1 mc away from the station's carrier frequency.

(c) Interfering signal about 3 mc away from the station's carrier frequency.

Fig. 13-5 Class 1 interference patterns

This means that the interfering signal is very likely a Class 1 type. Unless you know that there is a rather powerful station near you on some frequency below 13.5 mc, the chances are the trouble is due to some radiating device operating above that frequency. Here are some of the more common sources of such interference.

Frequency Modulated Broadcast Stations. – Signals from these stations can interfere in television receivers in two different ways, even if there are no other signals entering into the problem. The second harmonics of FM stations in the frequency band from 88.1 to 107.9 mc fall in the upper television channels (7 to 13, inclusive) and can cause trouble if they are strong enough. If there is an FM station or stations in your service area, this may be the source of the trouble.

Don't forget that there are two ways in which this second harmonic can get into the set. If the station is actually radiating quite a lot of second harmonic energy, it may be strong enough to show up in the picture. If the radiated second harmonic is very weak, but the fundamental is very strong at the receiver, the harmonic may be generated in the first r-f stage of the set, as you learned earlier. The remedy in this case is obviously to adjust the FM trap in the input to reduce the FM signal to a minimum. In extreme cases it may be necessary to add an extra FM trap across the input, if the design of the set will permit. In older model sets this trap can be added, but in later models, there isn't room, and an external stub of the sort described in Lesson 10 (cut to attenuate the FM signal, of course) may work well.

Image Interference from FM Stations. – The second way in which FM interference is likely to occur is as "image" interference on lower television channels. The principle involved is our old friend the non-linear device and two frequencies combining in it, but with a slightly varied twist. In this case, the non-linear device is the television set's mixer (often called the converter) tube, which is actually *meant* to operate that way. And the other applied frequency is that from the receiver oscillator, which is *also* doing its regular job. How come the interference? A few figures will show up the villain in the piece. Suppose we have a receiver tuned to Channel 2. This means the incoming picture carrier is at 55.25 mc. Because of certain requirements of practical receivers, it is necessary to convert the picture carrier and all its modulation side bands to a lower frequency before they are further amplified. This new frequency is called the *intermediate frequency*, or *i-f*, and for the sake of simplifying our discussion here, we'll consider only the Channel 2 carrier.

The necessary frequency change is accomplished in the mixer tube, which is operated in such a way as to generate those sum and difference frequencies we spoke of earlier, when two signal frequencies are applied to it. The incoming 55.25 mc television carrier is one signal, and the output of the receiver's oscillator is the other. Many receiver designs require that the picture carrier be converted to 25.75 mc, which we can do by mixing output from the oscillator at 81.0 mc with the carrier. (81.0 – 55.25 = 25.75). The other frequencies produced by this mixing process fall outside the pass band of the i-f amplifier, and thus do not interfere with reception. But here is where the "image" business comes in.

Suppose there is an interfering signal at, say, 106.7 mc, that reaches the input of the mixer? Again we have sum and difference frequencies generated, and 106.7 – 81.0 = 25.7 mc, a dandy interfering frequency that will certainly show in the picture, if it is strong enough in proportion to the television signal. Incidentally such interference is fairly common, and it's called *image interference* because the signal causing it is about as far *above* the oscillator frequency as the desired signal is *below* it, sort of a mirror image of the desired frequency.

To differentiate between FM and other Class 1 interference, study the patterns on the kine. FM interference shows the typical slanting or vertical light and dark bars, but also exhibits a wiggly effect due to the change of frequency with modulation. Also, an FM transmitter will usually be on steadily for several hours, whereas many of the other sources of such interference go on and off intermittently. It is quite likely that some of the FM station program will be heard in the sound channel as the fine tuning control is adjusted, and there will be a change in the interference pattern on the screen as well.

Some other measures that can be taken to improve the situation are reorientation of the antenna, and changing to a shielded type of transmission line, if pickup is principally in the line itself. Needless to say, you should make very sure of this point before you make any such change. Don't forget to check the way the interference is reaching the receiver, by removing the antenna, in a manner that will be explained in Sec. 13-4. Sometimes FM interference (and many other kinds, for that matter) is picked up directly on the receiver chassis, in which case traps may or may not be effective. Reorienting and relocating the antenna may improve television signal strength enough to override this kind of interference pickup in some cases.

Communications Transmitter Interference. – Interference to television can be caused by communications transmitters, as well as by FM and broadcast transmitters radiating entertainment programs. Although the general public is not fully aware of it, there are very many communications networks authorized to operate in public or private service. These include police, fire and emergency radio nets, communications systems of the Armed Forces, taxis and other mobile services, licensed amateurs, national and international news and telegram and telephone services, and many others. All of these are authorized services, with assigned frequencies for their operations. Since there are many thousands of transmitters and receivers operating in these services in all parts of the country, it is quite possible for them to produce interference in television receivers under certain conditions.

This interference can be produced in several different ways, some of them due to defects in the interfering equipment, and some due to other causes not controllable by the operator of the equipment radiating the interfering signal. In either case, the interference patterns on the kine looks about the same as those in Fig. 13-5, which means that some other method must be used to determine whether the trouble can be corrected at the source or at the receiver. This Class 1 interference is most commonly found on the lower television channels but in extreme cases may affect any or all channels. It usually comes on and goes off intermittently, without any regular rhythm of on and off periods, unless the interfering signal is being used for Morse code transmission. When this is the case, you can usually recognize the distinctive rapid rhythmic pattern of on and off time in the interference. Bear in mind that the modulation of the interfering signal may be either AM or FM, (with almost any kind of program, voice, music, etc.) Morse code, or it may not be modulated. It is often helpful to have an idea of how the interference is originating, so we'd better consider here a few more general facts about transmitting apparatus.

As you already know, radiofrequency power is usually generated in equipment having several stages of amplification and/or frequency multiplication. The interfering signal may be radiated from *any* stage in the equipment, although the higher powered stages are naturally more likely sources. Amplitude modulated transmitters are usually modulated in the final stage, or the next one preceding it, so if the interference shows no sign of modulation, it may be coming from an early stage in the transmitter. This information is not likely to be directly useful to you, for you are only responsible for doing what you can to eliminate the trouble at the receiver. However, in stubborn cases where an interference specialist must be sent out, you should pass on all possible information to your manager.

As we said earlier, the interfering signal may be actually radiating from the transmitting equipment of one of the various radio services, or it may be produced in other ways. Fortunately, it is much more common to find that the interference is actually being produced either in the input circuit of the receiver, or by external cross-modulation, as discussed earlier. In any event, one of the quickest and most useful tests you can make is to try connecting a high pass filter at the receiver input, taking care to ground it properly. This often shown an improvement. If the high pass filter makes little or no change in the interference, it's pretty likely that the transmitting equipment is actually radiating the interfering signal, or that it is being produced in some nearby metal structure with a poor contact. In most cases, however, the use of the filter will be all that is necessary.

Occasionally you will find that the transmitting equipment and/or the transmitting antenna is located very near the customer's property, where you are making the installation. In such cases, it is better to locate the television antenna as far from the transmitting antenna as practicable, as this will aid in reducing the possibility of interference. Of course, there will occasionally be stubborn interference cases in which nothing you can do at the receiver will solve the problem. The only thing you can do in such cases is call the Supervisor and pass on all the information you have on the matter, so that an interference specialist can come out and take it from there.

Before leaving Class 1 interference sources, it may be worth while to mention one specific source that sometimes interferes with receivers located near airports. Many airports have an aircraft navigation marker beacon on 75 mc that causes television interference. The most effective remedy seems to be a stub at the receiver input, accurately cut to reduce the amount of the interfering signal actually getting into the receiver.

Class 2. Television Transmitter Interference.— If a receiver is located midway between two metropolitan centers in each of which a television station is operating on, say, Channel 3, there is a chance that this *co-channel* operation will result in interference, as shown in Fig. 13-6.

These horizontal bars will usually move up and down through the picture in a sort of Venetian blind effect, which somewhat resembles the effect of sound signal in the picture channel, due to a faulty receiver. Changing the orientation of the antenna will usually make a change in the pattern, and of course your superior will know whether there are two stations on the same channel in your area, too. The remedy for this trouble is the use of an antenna with a good front-to-back ratio, and careful orientation so that the ratio of desired to undesired signal is high. In cases where the customer wants to be able to receive either station at will, two antennas, or a rotary antenna array or lobe switching antenna, are required.

Fig. 13-6. Venetian blind effect

Adjacent channel interference is produced when the signal from a television transmitter on a channel adjacent to the one tuned in is strong enough to affect the receiver. The effect usually looks something like Fig. 13-7, which we might call a "windshield wiper" effect. Such interference is most likely to occur when the receiver is poorly aligned and the adjacent channel signal is strong. Occasionally some improvement can be made by careful orientation, but usually the cure is touching up the alignment of the receiver, which is

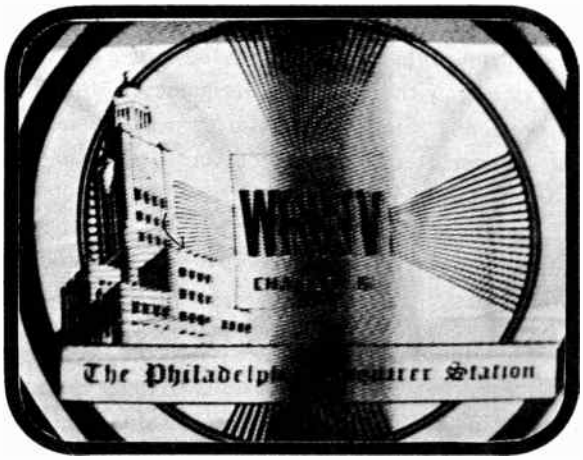

Fig. 13-7 (a) "Windshield wiper" interference from another TV station.

Fig. 13-7 (b) "Windshield wiper" interference photographed an instant later than (a).

something you can't tackle. If the interfering signal is exceptionally strong and the signal in the desired channel is weak, it may be necessary to use a tuned stub to reduce the signal on the strong channel somewhat.

Class 3. Oscillators in Other Receivers. – Most radio receivers in use today make use of the superheterodyne principle, which means they contain oscillating circuits that supply a local signal which is added to the incoming carrier to convert it to the i-f frequency. You'll learn more about the reasons for doing this later. What concerns us here is the interference often caused by these oscillators in various receivers. Unfortunately, one of the most serious causes of television interference is this very one – oscillators in other television, FM, and AM radio receivers. Of the lot, television receivers are probably as bad as any, and the problem can be quite a headache in areas where there are many receivers in each building.

Probably the most prevalent trouble is from television sets tuned to Channels 2, 7, or 9. When a receiver is tuned to Channel 2, its oscillator is on 81.0 mc. This falls right into Channel 5, and if there is a receiver nearby tuned to that Channel, there is very likely to be interference. If the antennas or transmission lines for the two sets are near each other, some improvement can usually be made by separating them, or by using coaxial or Twinex line for one or both. This will not work, however, if the pickup is direct on the chassis, and in such cases it may be necessary to call in an interference specialist. You can sometimes detect and identify the interference for what it is by watching the half hour points when the programs change. If the interference comes on or goes off at such a time, chances are the other receiver has been switched to a different channel. On the other hand such interference is liable to remain quite steady during the course of a normal program period.

The interference between receivers on Channels 7 and 11, and Channels 9 and 13 occurs in the same way, and similar measures apply. Unfortunately, this is not the end of the troubles that can arise from this cause. There are many thousands of receivers in service that were made by other manufacturers, and many of them do not use the oscillator frequencies given here. Also, many FM receivers can cause oscillator radiation troubles as well. These facts mean that when receiver oscillator interference is suspected, the job is likely to be a tough one, because of the many receivers in a given building, and the difficulty of contacting all the people concerned, to run down the source of the trouble. Even when the source is found, it will often develop that nothing can be done about the matter, at least not by installation crews. You report such matters to your superior, of course.

The kinescope patterns produced by this sort of interference are very much like those of Class 1 sources, and you can refer to pictures shown under that heading for a comparison.

Class 4. Diathermy and Industrial Heating Equipment. – Like many of the Class 1 interference sources, this sort of apparatus produces a more or less steady carrier frequency. Adjusting the fine tuning control will show some effects on the pattern of interference on the kine, as indeed, it will on most of the other kinds of interference covered in these Classes, *if* the signal is entering the receiver through the front end, in the normal way. Class 4 interference usually shows up in channels that are a direct multiple of the frequencies assigned to this service. These are narrow bands centering on 13.560, 27.120, and 40.680 mc. The harmonics will fall in Channels 2,4,5,7,9, and 11, with the first three likely to be the most seriously affected. Fig. 13-8 shows two typical patterns produced by such interference.

(a) Weak diathermy

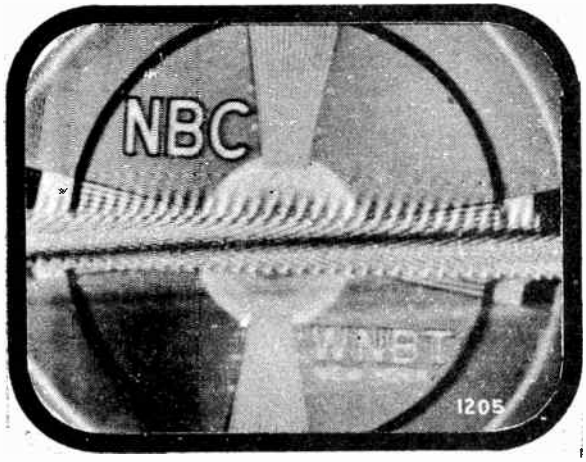

(b) Medium strong diathermy

Fig. 13-8

Other points that help identify such interference are the hours during which it shows up, the on-off time cycle, and the lack of modulation, other than 60 or 120 cycles, which usually puts a more or less dark bar or bars in the picture. Diathermy is most likely to come on for varying periods during doctors' office hours, and heating equipment will most likely show a fairly regular on-off time pattern corresponding to a production line rhythm during normal work shifts. Measures to be taken are to increase television signal pickup, and reduce interfering signal pickup by reorienting or relocating the antenna, moving the transmission line, or changing to a shielded type where it will help.

If interference persists, explain the matter to the customer, and report it to your superior. In general, this is likely to be something of a public relations problem, as was the case with amateur interference, and you should use the same tact and diplomacy that you do in such cases. Diathermy and r-f heating equipment are authorized, too, and while some of the older equipment is rather crude, it is still legal to use it.

General Procedures. - Before turning from these classes of interference, we can add a few general facts that will be of use. The specific examples mentioned here do not by any means exhaust the subject. There are many other possible sources of interference of the steady carrier frequency sort, but the ones given are the most common, and you should look for them first. Don't forget to check by removing the transmission line when you suspect external interference, and in suspicious cases, you may need to resort to another test.

If you think that the interference is getting into the i-f directly, try removing the oscillator tube, or even all three of the front end tubes. If the interference vanishes with the oscillator out of its socket, the interfering signal must be getting converted before it reaches the i-f. If it persists, you may have a case of direct i-f interference on your hands. These last are likely to require shielding and other desperate measures, so be sure to eliminate the other possibilities before you call for help.

Last but not least, use your own ingenuity in figuring out sum and difference frequencies of possible interfering signals. Sometimes a little thought along this line will give you the clue you need to identify the source of the trouble.

NOISE AND GHOSTS

13-5. Actually, radio noise voltages that injure television reception can be regarded as interfering signals, even though they are not deliberately generated in an apparatus meant for the purpose. However, for purposes of study it is more convenient to speak of these accidentally generated electrical impulses as *noise*, partly because most of them are made up of a broad band of frequencies with little or no harmonic relationship to each other. Since many of the audible sounds we normally call noise are of this character, this way of thinking of electrical noise impulses will avoid confusion.

Ignition Noise. – Actually, some of the common radio noises do have a fairly definite frequency or band of frequencies, but the effect is accidental. We will deal with the known examples of such noise in due time. First, however, let's consider a typical example of a noise of the pulse type, that is, one which occurs as a series of short, sharp, bursts of electromagnetic radiation, each of which covers a wide band of frequencies. The most common noise of this type comes from the ignition systems of motor vehicles, and fortunately is rather easily identified. Here is how it looks on the picture screen.

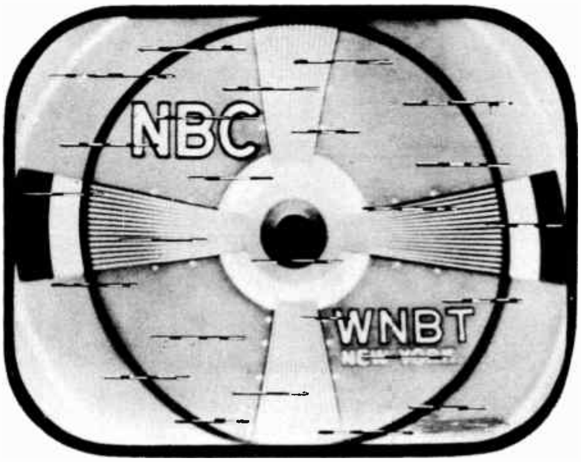

Fig. 13-9

Short random streaks of white or black appear successively throughout the picture area, and often there will be a crackling effect in the sound output as well, if the ignition noise is very strong. Unfortunately, there is as yet no law controlling the amount of radio noise a motor vehicle can radiate. As a result, receiving installations near heavily travelled streets and highways are often badly troubled by ignition noise. If such an effect shows up on one of your jobs, try to make sure it *is* ignition noise first. This you can usually do by listening for the sound of the motor vehicle engine, because often the radio noise will only be troublesome when the car is near enough for the sound of its engine to be heard. If you're not sure of the identification by just examining the kine screen, try to make this check, as knowing definitely where a noise is coming from often helps in eliminating it.

Test Procedure. – If the noise *is* from ignition, the next step is to find out how it is getting into the receiver. If the antenna is fairly near the street level, it may be picking up the noise. On the other hand, if the antenna is fairly high, chances are the transmission line is the culprit. It is even possible that the power line is bringing it in, or that it is being picked up on the receiver chassis directly, but these are less likely examples. You can test to see how the noise gets in by disconnecting the transmission line from the receiver input terminals. If there is little or no change in the noise pattern, go a bit further.

Short (connect) the transmission line conductors together, and connect the junction to some ground, such as a water or steam pipe. This will pretty definitely eliminate the possibility that the receiver end of the line is radiating the noise to the receiver chassis. If the noise persists, it must be getting in through the power line, or by direct pickup. (We're assuming you already know the receiver itself is okay.) If removing the line removes or greatly reduces the noise, maybe it is being picked up on the line, in the antenna, or in both. The next step is to reconnect the line to the receiver in the normal way, and disconnect it from the antenna, leaving the conductors open circuited at the antenna end. If the noise is about the same, or is reduced only a little, it is being picked up in the line. This is by far the most common way in which ignition noise gets in when parallel wire line is used, because such lines are not shielded, and cannot be kept in perfect balance in practice.

How to Minimize Noise Pickup. – The remedy may be to route the line by another path, if the interference is serious enough to justify the work. Also, it's worth remembering that keeping the line properly twisted between standoffs, and well clear of conductors helps to minimize noise pickup in it. Keeping the horizontal portion of the line as short as possible will also help, particularly if that part must be near the street, where the noise originates. However, in severe cases of more or less continuous ignition interference, the use of coaxial or Twinex type transmission line is about the only really effective solution, when line pickup is serious. This adds to the cost of the installation, so you should make *sure* it is needed, and then talk the problem over with the customer before proceeding.

In those cases where the antenna itself is picking up the noise, perhaps because a nearby busy intersection is fairly close to the axis of the antenna orientation, it may be possible to improve the situation by careful orientation. Try swinging the antenna to minimize the ignition noise, while still receiving sufficient signal on the television channels to provide good pictures. In mild cases this may do the trick, particularly if none of the television signals are particularly weak at the location. However, the improvement possible in this way is not usually great, and it may be necessary to relocate the antenna further from the source of noise, or to get it up higher, or use a higher gain antenna, to increase the desired signal pickup. Remember that to a considerable extent it's the *ratio* of desired signal to unwanted noise that counts.

Other Pulse Noise Sources. – In midtown areas, and to a lesser extent in suburban and fringe areas, there are other sources of pulse type radio noise that can cause trouble. Some of these are cash registers and other business machines, commutators of motors and generators, electric razors, sterilizing equipment, electronic door openers of some kinds, Neon signs, fluorescent and incandescent lights, etc. Often there's not much you can do about such devices, even after you've made sure they are the seat of the trouble. But sometimes you can relocate the antenna and/or the transmission line so as to pick up less of the noise. Don't forget the advantages of shielded transmission line where pickup is by that method. In some cases, it may be possible to put the antenna up higher or increase the desired signal strength in some other way, and this always helps to some extent. However, in cases where you've done all you can, but the noise is still too strong, better try to locate the offending device if you can, and point it out to the customer. Sometimes he can take some steps to have the trouble remedied, and in any event, you can at least feel that you have done your best for him. And of course, you report the matter fully to your superior.

Ghosts. – The subject of ghosts has been pretty well covered in the previous Lessons on antenna installation and orientation. There is not very much that can be added here, except to describe one kind of transmitter trouble that can occasionally puzzle someone. If through some misadjustment or defect in the transmitting equipment a "transient" effect is produced, it will be radiated along with the regular signal, and will show up in the receiver looking very much like a ghost image, but reversed in shading, that is, white following black, like this:

Fig. 13-10

A good test for this trouble usually involves calling your office and having someone check the signal there. If the defect is seen there as well, and with the fake ghost displaced about the same distance, it is quite likely to be trouble at the transmitter. We'll go further into the matter of defects in transmitter or receiver in the next section.

TRANSMITTER AND RECEIVER DEFECTS

13-6. In addition to the fake ghost mentioned above, other troubles can occur at the transmitter that may lead you to believe that interference is present. It is rather difficult to give a useful description of such effects, for they usually do not last long, and show changes with adjustments at the transmitter. Probably the best way to deal with them is by checking reception of the channel involved in another receiver, preferably one at some distance from your location. Often, calling your office will be best and quickest, and if you suspect the "interference" is really transmitter trouble, find out in this way before you waste a lot of time. As you gain experience, you'll find you can spot such phony interference most of the time without any help, anyhow. Another useful test, if other active channels are available, is to check reception on them. If all is normal, chances are the receiver is not at fault, which means you've narrowed down the possibilities still further.

Receiver Defects Can Resemble Interference. – In installation work, you can usually assume that the receiver is in normal working order. However, mistakes can creep into even the best production lines, and damage in transit can play havoc with a unit as complex as a television receiver. There *are* a number of receiver defects that may make you think you have interference troubles – if you don't know how to separate the sheep from the goats. Here are some of the most common examples.

Misalignment. – If the receiver is out of alignment, it may show a pattern resembling ghosts, or interference. One clue to this condition is the fact that it usually shows up on all channels more or less uniformly. This will not always be the case, however, and another test is to adjust the fine tuning control quickly back and forth over a small range. If the "ghosts" change their intensity and distance from the main image, the trouble is probably misalignment and/or overall regenerative feedback. In any case, the receiver should be serviced. Serious misalignment and regeneration will also affect the picture quality, so that no amount of adjustment of the set-up and operating controls will give good results. Needless to say, you shouldn't waste time trying with them, if you've established that the set needs alignment.

Sound I-f Channel Harmonics. – In every television receiver there is some point in the circuit where the sound and video signals are separated by suitable circuits, to be amplified and detected individually. This separation of the sound and picture signals is done *after* both signals have passed through the converter stage and been converted to intermediate frequencies. Now, as you remember, (you *should*, anyhow) the mixer tube in which the frequency conversion takes place has to be a non-linear device, in order to do its job. This means that it also generates a lot of harmonics of all the applied frequencies. In normal sets, the unwanted harmonics are by-passed harmlessly to ground, and cause no trouble. However, a receiver does occasionally show up that is not operating normally, usually because the jarring and vibration in shipment has changed the position of some wiring, or caused a loose contact somewhere. When this happens in such a way that harmonics of the sound i-f frequency get back into the picture amplifier, the effect will show up in the picture as a more or less distinct pattern.

You can check for this condition by pulling the first tube in the sound i-f channel. If the herringbone pattern disappears, the trouble is located. It has been reported on Channels 5 and 13, and probably shows up on others as well.

If your test shows that this is the trouble, try pressing the sound i-f transformer and discriminator shield cans firmly against the chassis, to see if they are producing the trouble because of poor contact. If this produces a change in the "interference" pattern, tighten the contact between the shield and chassis as well as you can. Also, make sure the antenna lead-in from the terminal board on the rear of the cabinet is dressed well away from the chassis, so as not to unbalance the receiver input circuit. Remember that this phony "interference" has to get back into the front end of the set, and it cannot do so easily if good balance is maintained.

If the steps given above do not improve matters, it may be that the dress of the discriminator leads or other wiring in the chassis is incorrect. This should be checked against the diagram in the Service Data, and put right. Incidentally, another test you can use in running down this defect is to remove the discriminator tube. This is particularly useful if the trouble is originating in that circuit.

Picture I-f Channel Harmonics. – Another difficulty can be caused by radiation of harmonics of the picture i-f band. Channel 5 is the one most often affected, but the effect can also show up in Channel 4, particularly if the internal antenna is in use. One partial remedy for this is to cut six inches from each end of the internal antenna, resoldering the wires at the ends, of course. Try changing the 12AU7 tube in the video amplifier, as a weak tube in this socket will make the trouble much worse. The lead dress around the picture second detector socket should also be checked carefully against the Service Data. If these steps do not clear up the trouble, it is likely that further work will have to be done by a service man.

Other Causes of Reception Defects. – When an FM signal arrives at the receiver by two paths of slightly different length, the sound is likely to be badly distorted. This is particularly true when both parts of the signal are about the same strength. Sometimes this happens in television reception, and quite often the picture channel will show little or no defect on the same channel. This might lead you to believe the receiver was defective. You can check this by switching to a different channel and checking the sound quality there. If it is okay, chances are you may have some multi-path trouble. Occasionally reorienting will help, but usually this is not completely effective. Moving the antenna up or down a few inches or feet may also do some good, and is worth trying if the trouble is really severe. However, relocating the antenna is likely to be the most effective remedy.

Airplane flutter is another cause of loss of picture and sound quality in some cases. Fortunately the effect is temporary, and lasts only so long as the plane is fairly near the receiving location. The effect is caused by signal energy reflected from the plane into the antenna. It acts like any other case of multi-path reception, except that the difference in path length changes constantly as the plane moves. This causes the effect to go in and out rapidly, hence the name flutter. About the only cure for this kind of trouble is to get used to it, although a very high gain stacked antenna may help some. Incidentally, improper adjustment of the AGC control can make the flutter effect much worse.

Before leaving the subject of interference and kindred receiving troubles, we may as well mention some less common sources of difficulty. These are usually only found in small local areas, but who knows? You may find yourself right there some day, so file away as many as you can in your memory. In some places, power lines are also used for communication by feeding a carrier wave from a transmitter into them at the sending position. Sometimes this carrier or its harmonics may show up in the television receiver, either by coupling through the power line, or by radiation from the power line to the antenna.

There are also several devices used for opening and closing doors and similar purposes that have an r-f oscillator as a part of the apparatus. These have been known to cause trouble also. Last, but probably most important of all, many new radio services are now beginning operations on a considerable scale. These include taxi and truck dispatching services, railway communications, automobile phone service, and dozens of others. Many of these have assigned frequencies below the television channels, which means their harmonics can cause trouble if they are strong enough. The only solution for you is to be alert, keep as up to date as you can, and try to interpret what you see on the screen and hear from the speaker. If you can weed out the problems, you can cope with and handle them efficiently, and avoid wasting time on those that require more specialized knowledge and equipment, you'll have done your part of the team job very well indeed.

◆

Normal test pattern.

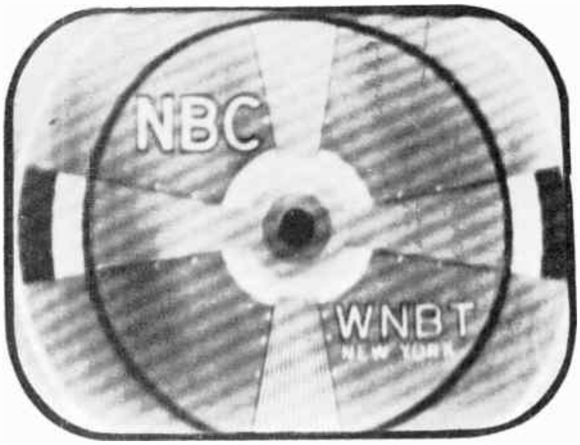

r-f interference.

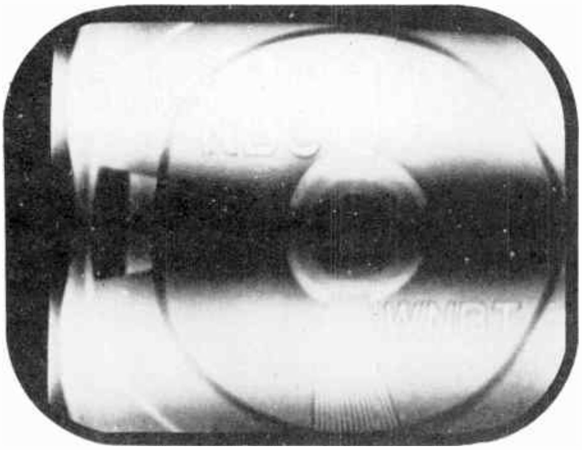

60 cycle interference.

420 cycle audio signal in video amplifier.

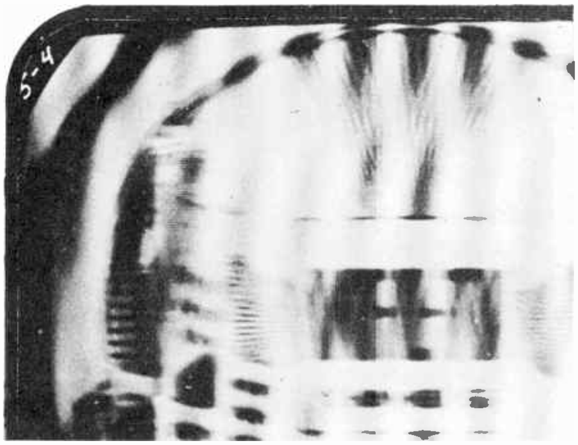

0.25 mc beat produced by an interfering signal.

2 mc beat produced by an interfering signal.

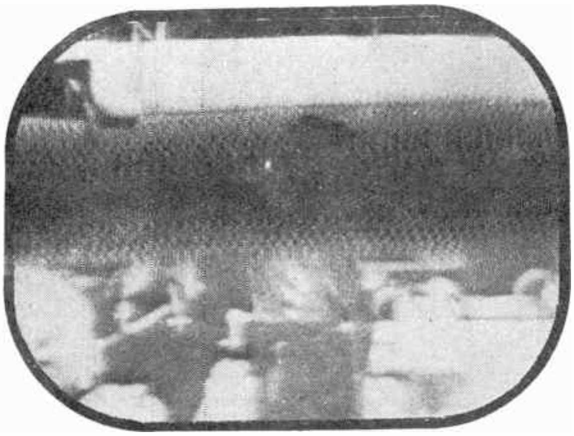

Mild diathermy interference. A single bar (60 cps) drifts slowly up or down.

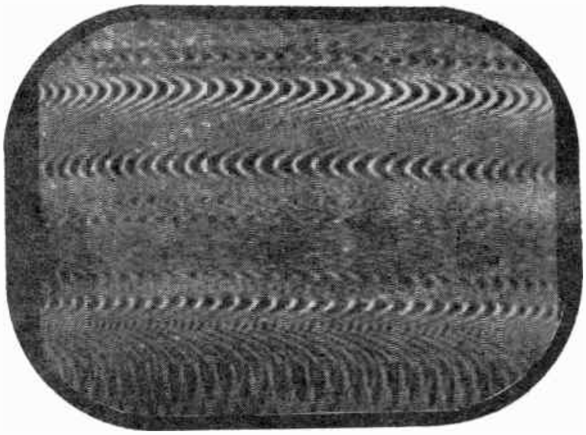

Severe diathermy interference at 120 cps. Bars drift slowly up or down.

Medium strength interference caused by a neighboring receiver.

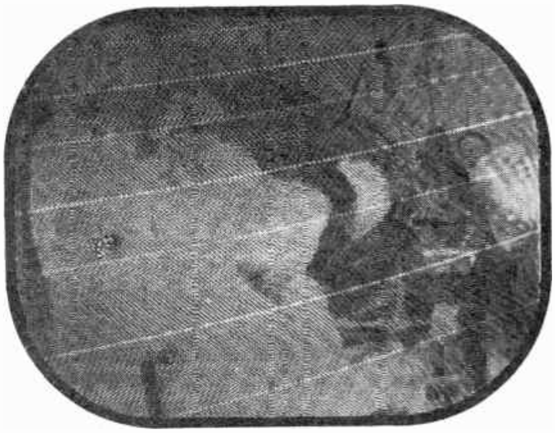

Very strong receiver radiation has turned picture to a negative.

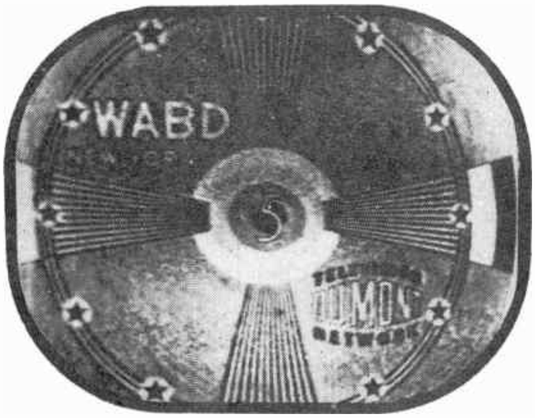

Sandpapery effect of mild electrical appliance noise.

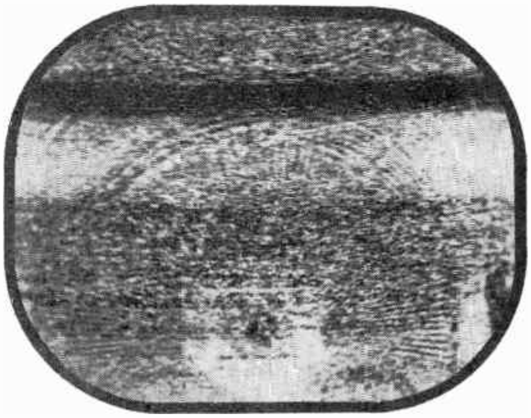

Strong electrical appliance noise causing loss of sync.

Reprinted by permission of *Electronics*,
McGraw-Hill Publishing Company

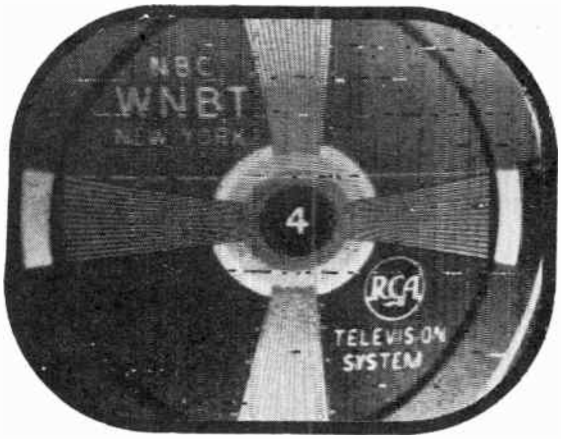

Spark plug interference.

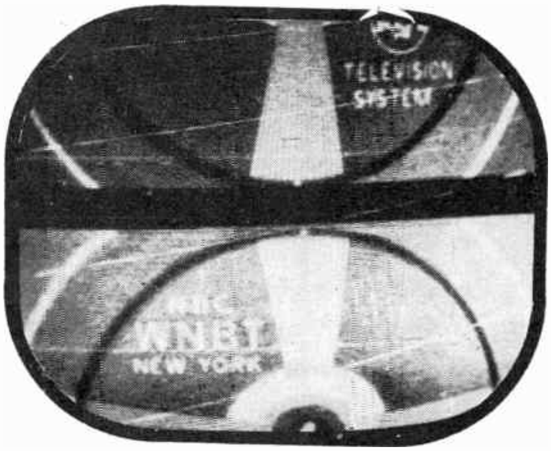

Spark plug interference causing loss of synchronization.

Reprinted by permission of *Electronics*,
McGraw-Hill Publishing Company

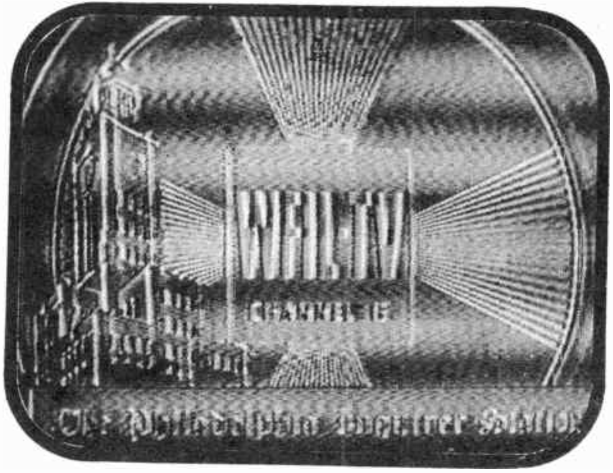

Strong 1 mc beat interference with 400 cycle FM tone almost reverses the contrast.

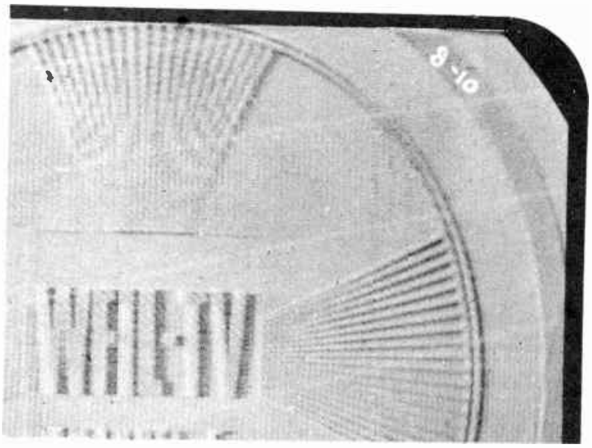

3 mc beat produced by an interfering signal almost reverses the contrast.

Picture pushed out of shape by the magnetic field of a PM speaker near the flare of the kinescope.

60 cycle interference in video circuits.

NOTES

NOTES

NOTES

NOTES

NOTES

TELEVISION SERVICING COURSE

PREPARED BY

RCA INSTITUTES, INC.
A SERVICE OF *RADIO CORPORATION OF AMERICA*

HOME STUDY DEPARTMENT
350 West 4th St., New York 14, N. Y.

LESSON FOURTEEN

PROJECTION TELEVISION RECEIVERS

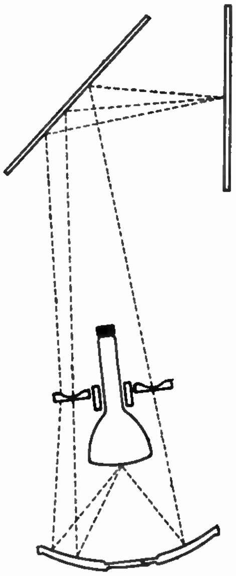

Lesson 14

PROJECTION RECEIVER CHARACTERISTICS.

14-1. In Lesson 2 we learned about the basic sections of a conventional television receiver. One of the inherent problems of such a receiver is the practical difficulty in producing a picture of relatively large size. The conventional, or direct view, receiver displays its viewed picture upon the face of the kinescope. Obviously, to increase the size of the picture, a larger kinescope is required. One solution to the problem of obtaining larger size television pictures lies in the use of a projection system.

A television projection system is similar in principle to motion picture projection. Motion picture projection provides a greatly enlarged picture by magnification and projection of the original picture on the film. Television projection also operates on this basic principle, but differs from motion picture projection in that the television picture is usually projected upon the *rear* of the screen. This screen is specially constructed so as to pass the light through to the front, where it is viewed.

The projection and enlargement of television pictures requires the use of an optical system which is not found in direct view receivers. It also requires the use of a special kinescope, smaller than usually found in direct view receivers, and having special characteristics. In addition, the special adjustments and maintenance procedures required are radically different from those you have already learned about. In this lesson we shall discuss the projection system in detail, so that you will become familiar with its operation and adjustments.

Problems of Projection Receivers. – The purpose of a projection receiver is to increase the picture size, compared to the size that can be obtained with a direct view receiver. The projection screen for home receivers provides a television picture measuring 15 by 20 inches (height by width). To produce a picture of comparable size with a direct viewing receiver would require a kinescope with a diameter of about 25 inches.

Basic Components. – The basic components of the projection arrangement known as the Schmidt type system are shown here:

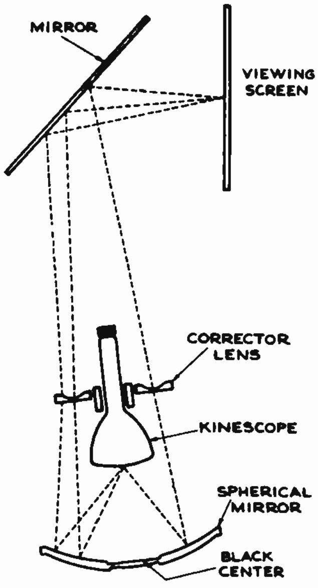

Fig. 14-1

The system consists of: (1) a projection kinescope (5 inch diameter); (2) a spherical mirror; (3) a correcting lens; (4) a plane mirror and (5) a viewing screen. Briefly, the operation is this: A high intensity television picture is formed upon the face of the projection kinescope. The light from the picture falls upon the spherical mirror and is reflected upward. It passes through the correcting lens and falls upon the plane mirror. It is reflected from the plane mirror to the rear of the viewing screen, where the picture comes into focus, and may be viewed from the front of the screen. It might appear that the kinescope would interfere with the reflection of the picture to the plane mirror. It doesn't, though, for reasons we'll explain later. The entire projection unit, with the exception of the plane mirror and viewing screen, is contained within a cylindrical unit called the "optical barrel".

There are several problems presented by the requirements of enlarging the picture. The larger the picture to be viewed, the greater is the total amount of light it must emit, to obtain a given brightness of the final picture. If, as in the projection receiver, the final picture is an enlargement of a much smaller picture on the kinescope, the small kinescope must give off at least as much total light as the final enlarged picture. This means that the brightness – light given off per square inch of surface – must be much greater than if the kinescope picture were to be viewed directly. This is why we referred a few paragraphs back to the *high intensity* of the kinescope picture.

This requirement raises the electrical problem of how to produce the high intensity picture. To accomplish it, the beam electrons must reach much higher velocities than those in the direct view kinescope. This in turn requires an extremely high accelerating potential. This potential may be in the order of 25,000 to 30,000 volts. To produce such high potentials entails additional circuit complications, and increases the danger, due to electric shock, of handling the equipment. Another problem is posed by the additional adjustments of the optical system which are necessary for correct alignment. These adjustments are rather critical and may consume considerable time.

In spite of these problems, the projection receiver possesses an advantage over direct view receivers using relatively small tubes.

Handling Precautions. – Certain parts of the optical system are rather delicate and must be handled with extreme care, if serious damage to the equipment is to be avoided. The cardinal rule to follow in handling projection equipment is: *"Don't touch anything, or even attempt to open the shipping carton, until you have carefully read the instruction book!"* Parts such as the corrector lens, mirrors, and projection screen may be ruined by improper care. We will discuss the correct handling procedures and care of the equipment in a later section of this lesson.

Special Controls and Adjustments. – In addition to the usual controls and adjustments found in a direct view receiver, there are several more to be found in a projection receiver. We will name these and give a brief description of their function here. Later on, we will go into more detail.

1. Local-Remote switch. This makes it possible to control brightness and contrast from a remote position.
2. Interlock switch. This switch insures that the receiver will be turned off when the cabinet is closed.
3. Optical focus adjustment. Provides for focusing of the optical system.
4. Horizontal or Lateral (sideways) adjustments to provide for horizontal and sideways movements of the kinescope for correct alignment.
5. Optical barrel adjustments. These are several adjustments to provide correct tilt of the optical barrel.

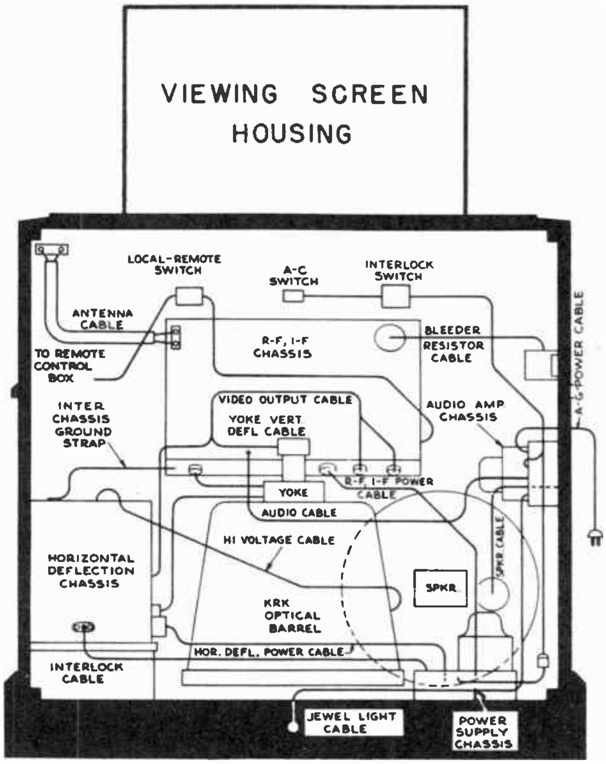

Fig. 14-2

Directional Screen. – The viewer of a projection receiver observes the television picture upon a special directional screen. The screen measures about 15 by 20 inches, and provides a picture of the same dimensions. This screen differs from a conventional ground glass screen in that it has directional properties. That is to say, the viewer must remain within certain viewing angles in order to see a satisfactory picture.

A directional screen has the advantage of providing a much brighter picture within the restricted viewing angles than a non-directional screen. Restricting the light output from the screen to certain angles is not much of a disadvantage, since much of the light that might be sent out to wider angles would be largely wasted. By utilizing a directional screen, it is possible to obtain a larger satisfactory picture, with a given amount of light, than would be possible with a non-directional screen. This indicates that a directional screen is much more efficient than a non-directional one.

Receiver Layout. – Unlike the usual single chassis of the direct view receivers, a typical projection receiver may consist of four separate chassis interconnected by a plug and cable arrangement. A typical layout is shown in Fig. 14-2. The four chassis are:

1. An r-f, i-f chassis, containing the station selecting and amplifying circuits, and the vertical deflecting circuits.
2. A horizontal deflection chassis. This contains the horizontal deflecting circuits and the high voltage (29,000 volts) power supply.
3. The audio amplifier chassis, containing three tubes for audio frequency amplification, and its own low voltage (250 volts) power supply.
4. The power supply chassis, containing two low voltage power supplies, one for the r-f, i-f chassis, and one for the horizontal deflection chassis.

In addition to these components, the cabinet contains the optical barrel, mirror and screen, and the various cables and switches, as shown in Fig. 14-2.

THE PROJECTION KINESCOPE

14-2. The projection kinescope operates on the same basic principle as other kinescopes and cathode ray tubes. It is, however, specifically designed for projection systems, and therefore has certain features and design characteristics not to be found in other types.

A sketch of the 5TP4 projection kinescope is shown here:

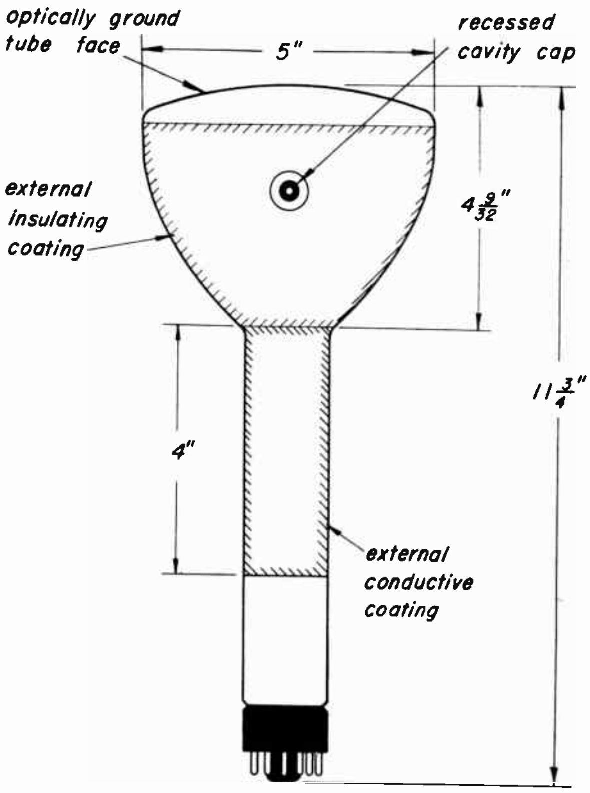

Fig. 14-3

As indicated in the drawing, the diameter of the tube is 5 inches, plus or minus 1/8 of an inch. The overall length is 11-3/4 inches, plus or minus 3/8 of an inch.

Conductive Coatings. – There is an *external* conductive coating on the neck of the tube. It extends from the bulb toward the base for about 4 inches. This is indicated on the drawing. The purpose of the coating is to prevent corona (arcing) between the neck of the tube and the deflection yoke. The neck also has an *internal* conductive coating, which is at a potential of about 29,000 volts. If the external conductive coating were not present, there would be a tendency for the high voltage to try to pass current through the glass to the yoke. This would tend to damage the yoke insulation and cause breakdown of the glass in the neck. The outer conductive coating is grounded, and prevents arcing to the yoke by acting as a low resistance path to ground for any currents produced by the high voltage. Grounding of the external coating may be accomplished by using a small ground clamp at the base end of the coating, or by a soft brush contact, inside of, or attached to, the bottom of the yoke. Unless the outer conductive coating is grounded, it may assume the potential of 29,000 volts, and damage the yoke insulation. The inner and outer conductive coatings on the neck also serve a secondary function by acting as a built-in capacitance, to assist in the proper filtering of the high-voltage power supply.

External Insulating Coating. – As indicated in Fig. 14-3, the bulb section of the projection kinescope is protected by an external *insulating* coating. This is a moisture-repellent, lacquer coating, which prevents condensation of water vapor into a conductive film over the surface of the glass. The necessity for such an insulating coating can be realized when it is seen that the high voltage lead connects to a *cavity cap*, recessed into the bulb. This high voltage (29,000 volts) connection is only about 3 inches from the beginning of the external conductive coating (see Fig. 14-3), and any slight conductive moisture film accumulating between the cavity cap and the outer conductive coating would cause severe arcing The insulating coating does not prevent moisture from condensing, but permits it to run off, or causes it to collect in rather large globules, which are individually insulated, and therefore do not form a conducting path. The bulb insulating coating should not be touched, as fingerprints may reduce its insulating properties. If the coating has been handled, it may be cleaned with a soft cloth moistened with "dry" carbon tetrachloride, obtainable at most drug stores. You must take great care not to scratch the coating or wash it with any liquid which is a solvent for paints or lacquers, as this may render the tube inoperative.

Kinescope Face. –The face of the kinescope differs from the conventional tube face. It is not just a piece of plain glass, but is actually an optically ground lens. This face lens is necessary to prevent a type of optical distortion known as field curvature. The inner surface of the face is coated with a phosphor that produces white light when bombarded by the electron scanning beam. This coating is unusual in that it has a metallic backing of aluminum. The aluminum backing is formed by evaporating an extremely thin film of aluminum upon the phosphor. The film is so thin that it will readily pass electrons through to the phosphor, and thus produce the fluorescence which we see as light. Use of the aluminum backing provides three major advantages over the non-aluminized type of kinescope. The aluminized screen: (1) provides more useful light output or a given set of tube operating conditions; (2) eliminates ion spot discoloration; (3) improves the contrast (ratio between lightest and darkest parts of the picture).

Let us discuss each of these points separately.

Internal Loss of Light. – In conventional kinescopes, a great deal of the light is wasted. About 50% of the generated light is emitted back toward the rear of the tube. Another possible 25% is lost by internal reflection in the glass of the kinescope tube face. Thus in the conventional tube, only about 25% of the total generated light is emitted in the forward direction, to constitute the useful light output of the tube. These effects are shown here:

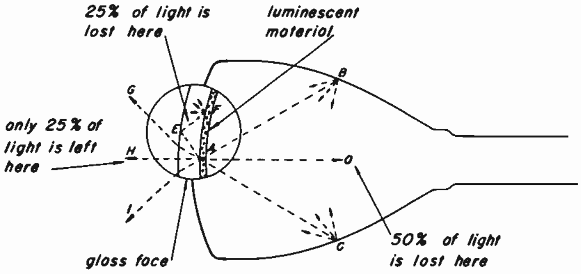

Fig. 14-4 (a)

The lines marked AB, AC, and AD show how light may be emitted to the rear. The line marked AEF shows how light may be lost by internal reflection in the glass of the tube face. Lines AG, AH, and AI represent light being emitted in the forward, desired direction. As we said, in conventional tubes this is only about 25 percent of the total generated light. This is tolerable in the conventional tube, but not in a projection tube requiring a high intensity picture.

The effects of the metal backing on light distribution are shown in Fig. 14-4 (b)

We can see from the drawing that practically no light at all is now emitted to the rear. The light that was previously emitted to the rear is now reflected by the aluminized backing, and adds to the light emitted in the forward direction. The lines marked AB, AC, and AD, which represented light emitted to the rear, now add to the light, represented by the lines AG, AH, and AI. It is apparent that the amount of forward-directed light now available is considerably greater than that which could be obtained from a conventional kinescope.

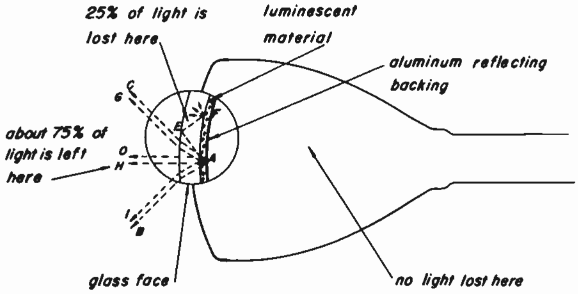

Fig. 14-4 (b)

Ion Spot. – In Lesson 2 we said that the electron gun produces negatively charged *ions* in addition to electrons. These ions are much heavier than electrons and may damage the fluorescent coating if something is not done to prevent them from striking the screen. When a metal backing is used, it may be so designed that it completely blocks ions and yet passes the electrons readily. This prevents the formation of the brown ion spot without requiring an ion trap and magnet, such as is used in conventional kinescopes. It thus simplifies both the construction and the adjustment of the kinescope. Further, if the aluminized screen were not used, it would be much harder to make an effective ion trap, due to the much higher velocities of both electrons and ions in the projection tube.

Contrast. – The lack of a metal backing causes a waste of light, as we just explained. However, it should be realized that some of this wasted light is actually harmful to the picture. This is due to the fact that some of the wasted light is scattered back onto the screen, including those parts of it that *should* be dark. This produces a minimum level of illumination which limits the possible contrast of the picture. It is obvious that the contrast (ratio between the lightest and•darkest parts of the picture) will be reduced if you start with a screen that is partially lit from this undesired illumination.

There are several ways in which the scattered light may return to the screen. One is by reflection from the inside walls of the tube. Although these walls are blackened, they do return a little light to the screen. Another is the light from one portion of the screen which can illuminate other portions directly, due to the curvature of the face. Still another way for the scattered light to return to the screen is by internal reflection in the glass of the kinescope tube face. This effect is known as "halation". The metallized backing improves contrast by preventing scattered light due to reflections from the inside walls of the tube and the curvature of the face from reaching the screen. There is not too much that can be done about halation, and the extraneous illumination due to this cause is only slightly improved in the metalized tube.

Deflection and Focus. – In Lesson 2 we learned that in a direct view kinescope, the deflection and focusing of the electron beam was brought about by magnetic fields. *Deflection* in the projection kinescope is accomplished in the same way as in a conventional kinescope – that is, by the action of varying currents flowing in the deflection yoke. However, in the 5TP4 projection kinescope, focusing is accomplished by the action of an *electric* field rather than a magnetic field. This is known as *electrostatic* focusing. There is no focusing coil or other *external* mechanical device used in electrostatic focusing. The elements which produce this type of focusing are built-in as an integral part of the electron gun. Due to the shape of the focusing elements and the potentials applied to them, an electrostatic field is produced, which acts on the electron stream to bring it into focus at the kinescope face.

Brightness. – The electron beam in any kinescope must be accelerated to very high velocities in order to produce sufficient brightness in the picture. In conventional receivers, an accelerating potential in the order of 9,000–14,000 volts is commonly used. While this will produce sufficient brightness for *direct viewing*, it is not enough for a projection kinescope. For one thing, there is a considerable loss of light just going through the optical system. This is due to its low light efficiency, which is in the order of 30 percent. If only 30 percent of the original light is available to the viewer, we must start out with a very intense light at the kinescope to compensate for the losses.

Also, as we indicated earlier, a controlling factor is the magnification of the picture. The picture reproduced directly on the 5TP4 is roughly 3 inches high by 4 inches wide. This represents an area of 12 square inches over which the total light is distributed. Let us say that in 1 square inch of area the light will have a brightness of 100 units. After the picture has been magnified, its dimensions will be 15 by 20 inches. The area now has increased from 12 square inches to 300 square inches or an increase of 25 times. If the original brightness was 100 units per square inch with the 3 x 4 inch picture it will now have decreased in proportion to the increase of area or to 1/25 of the original value which is only 4 units.

From the foregoing, we can see that to obtain sufficient brightness in the viewed picture, we must make allowances for both the low efficiency and the magnification of the optical system. Thus we must begin at the kinescope with a brightness many times greater than that which is desired in the viewed picture.

High Voltage. – In order to produce the desired brightness at the face of the projection kinescope, it is necessary that the electron beam velocity be considerably greater than in conventional kinescopes. This requires a greater accelerating potential than usual (almost 3 times as much). This very high accelerating potential is produced by the high voltage power supply which has an output of about 29,000 volts. This is an awful lot of volts and should be given at least as much respect as a wounded tiger. The high voltage supply is basically the same as that used in conventional receivers, with the exception that it incorporates a circuit known as a *voltage tripler*. As in conventional receivers, the flyback pulse available for the high voltage supply is about 10,500 volts. In the projection receiver, this pulse is applied to a voltage tripler circuit, where it is increased to about three times its value. This would lead us to believe that the output voltage should be 31,500 volts. However, there are voltage drops in the tripler and filtering system, and these reduce the output to about 29,000 volts. The high voltage supply is so designed that it is incapable of supplying any appreciable amount of current. This does not detract from its effectiveness in the receiver, and gives it the very important advantage of being safer to handle than a supply capable of providing considerable current. If you happen to touch the high voltage, the chances are rather good that you won't get killed, but you can receive a very severe shock. Don't press your luck, though. Make sure the set is off, and discharge all high-voltage condensers before touching anything. The procedure for discharging the high voltage condensers will be explained later in the lesson.

THE SPHERICAL MIRROR

14-3. The first element of the optical system to receive the light from the projection kinescope is the *spherical mirror*. It can be seen in Fig. 14-5, and is known as the *concave* type. The word "concave" merely indicates that the mirror is curved inward. (If it were curved outward, it would be called *convex*.) The term "spherical" indicates that the mirror is a section of the outer portion of a sphere, or round ball. That is to say, if we extended the mirror, using the same curvature, it would form a ball or sphere. The concave spherical mirror is used in projection television for several important reasons. It is very efficient in gathering and reflecting the light emitted from the kinescope, and it has the property of *magnification*. It is because of the latter property that we are able to produce *enlarged* pictures in a projection television receiver. The spherical mirror is easier to make, compared to other shapes that might require no correction.

Physical Characteristics. – Two views of a typical spherical mirror for projection receivers are shown in Fig. 14-5.

We can see that the spherical mirror has a diameter of 12 inches and is curved inward. It has an aluminized *front surface* coating on a Pyrex base. A rear surfaced mirror would not be suitable here, for two major reasons. First, the light would have to pass through the thickness of the glass to reach the reflecting surface and then pass through it again on the way out. Some of the light would be trapped within the glass, thus reducing the efficiency of the mirror. Secondly, a certain amount of bending of the light rays (called *refraction*) takes place during the travel through the glass, and this causes some distortion of the picture. The use of front surfacing eliminates these two disadvantages, but introduces another one. Because the surfacing is on the front of the mirror, it is completely exposed to any and all possible forms of abuse. Therefore, *great care must be taken in the handling and cleaning of the mirror,* to prevent damage to its surface, which would reduce its efficiency.

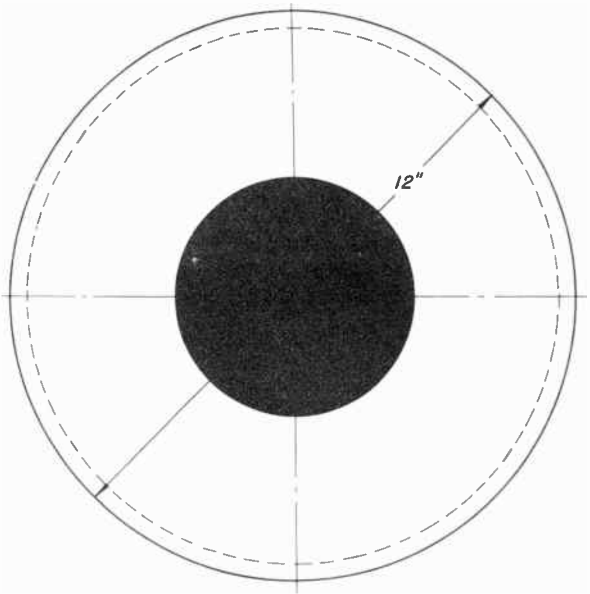

top view

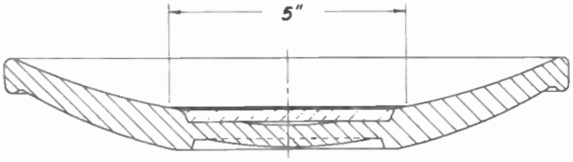

side view

Fig. 14-5

As you can see in the drawings, the center portion of the spherical mirror is blacked out. The black portion has a diameter of 5 inches. This blacking out of the center section is necessary to prevent light from being reflected back to the kinescope face. If this should occur, parts of the television picture on the kinescope which should be black, or dark, would be illuminated. This effect will be retransmitted to the spherical mirror, and will result in a reduction of picture contrast.

Handling and Cleaning. – The front surface of the spherical mirror is very delicate, and should be treated very gently. Do not handle or come in contact with the mirror surface without good reason. If there is only one speck of dust on the surface, leave it there. However, if a reasonable amount of dust has accumulated on the mirror surface, it may be removed by the following procedure. Sweep the dust into the black center portion of the mirror with a small, soft camel's hair brush. You can now pick up the dust with a piece of scotch tape or other adhesive material (friction tape, masking tape, etc.). After cleaning, the dust cover should be tied securely in place to prevent further accumulation of dust and dirt.

Distortion. – While the spherical concave mirror is ideal for use in the projection type system, it is not a perfect device. In television, a relatively deep mirror must be used because of its superior light gathering properties, and because it permits the use of a compact system. However, the deep-dish type of mirror produces an undesirable blurring of the picture which must be corrected. This type of distortion is called by the fancy name of *spherical abberation.* An additional lens, known as the *corrector lens,* is employed to counteract the blurring, and bring the picture back into focus.

THE CORRECTOR LENS

14-4. Because of the picture distortion (spherical aberration) which is inherent when using a deep-dish spherical mirror, it is necessary to provide some means of neutralizing or counteracting this distortion (blurring). This is accomplished by the use of a corrector lens. The corrector lens neutralizes the distortion by producing its own distortion which is equal to that produced by the spherical mirror, but opposite in its effect. Thus, when both types of distortion are added, they cancel each other, and this results in a clear, in-focus picture on the screen.

Physical Characteristics. – Two views of the corrector lens are shown here:

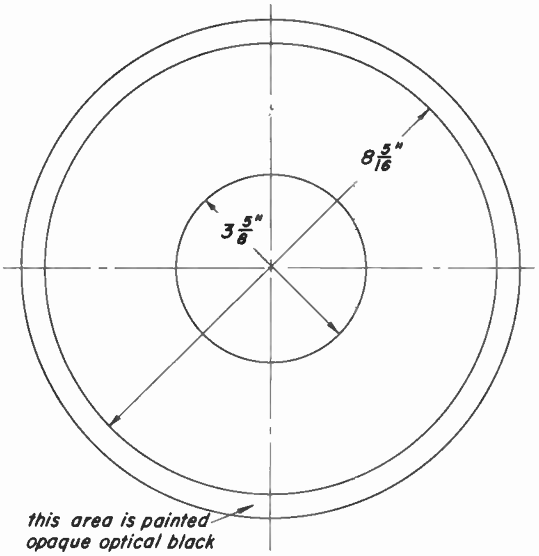

top view

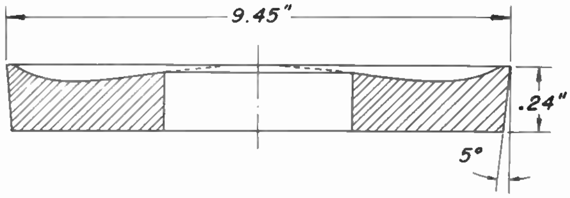

side view

Fig. 14-6

From these views we can see that the corrector lens has a diameter of 9.45 inches. The center section of the lens is cut out to permit the insertion of the kinescope neck and deflection yoke. This cut-out has a diameter of 3-5/8 inches. The maximum thickness of the lens is about .24 inch. The placement of the lens in the optical system can be seen in Fig. 14-1.

One of the major problems of putting this projection system into operation was the relatively high cost of producing the corrector lens by conventional optical grinding methods. This disadvantage was overcome by the development of a process for molding (not grinding) the correcting lens from a plastic. Special machines have been developed for producing suitable molds to make these plastic lenses. Such lenses can be produced for a fraction of the cost required to make a similar lens by grinding optical glass. The material used in molding the corrector lens is the plastic which is commonly known by the trade names of Lucite and Plexiglas. Some very serious problems in molding the plastic lenses had to be overcome before suitable lenses could be produced. The most important of these was the construction of metal molding surfaces of the proper shape, and the problem of producing optical finishes on the metal surfaces. The actual metal mold is formed by precision machines and methods from a flat disk of hardenable stainless steel. The final optical finish of the surface of the mold results from the proper choice of the metal, proper hardening and tempering, and the correct choice of abrasives and polishing agents. Add to these a great deal of skill, patience and perserverance, and you have the finished metal mold.

The actual molding process consists of applying very high pressure to the heated plastic material, and then cooling it under pressure until it reaches room temperature. After the mold is opened, and the lens taken out, the only remaining operation is the drilling of the center hole. No polishing or finishing of the lens is required. The plastic lenses possess excellent optical properties, and have less scattering of light, and better transmission of light than glass. However, they are relatively soft as compared to glass, and must be handled with considerable care.

Mounting and Adjustment. – The corrector lens mounting in a projection receiver can be seen in the drawing of Fig. 14-7.

The lens is placed in a shallow recess at the top of the optical barrel. It is held in place by the pressure of four spring mounting clips and four cams and locking screws. You can see these in Fig. 14-7. When the system is first aligned, the corrector lens must be adjusted by loosening the locking screws, and moving the lens to the correct position, in a manner to be described later. The locking screws are then tightened down, and the corrector lens is held firmly in place.

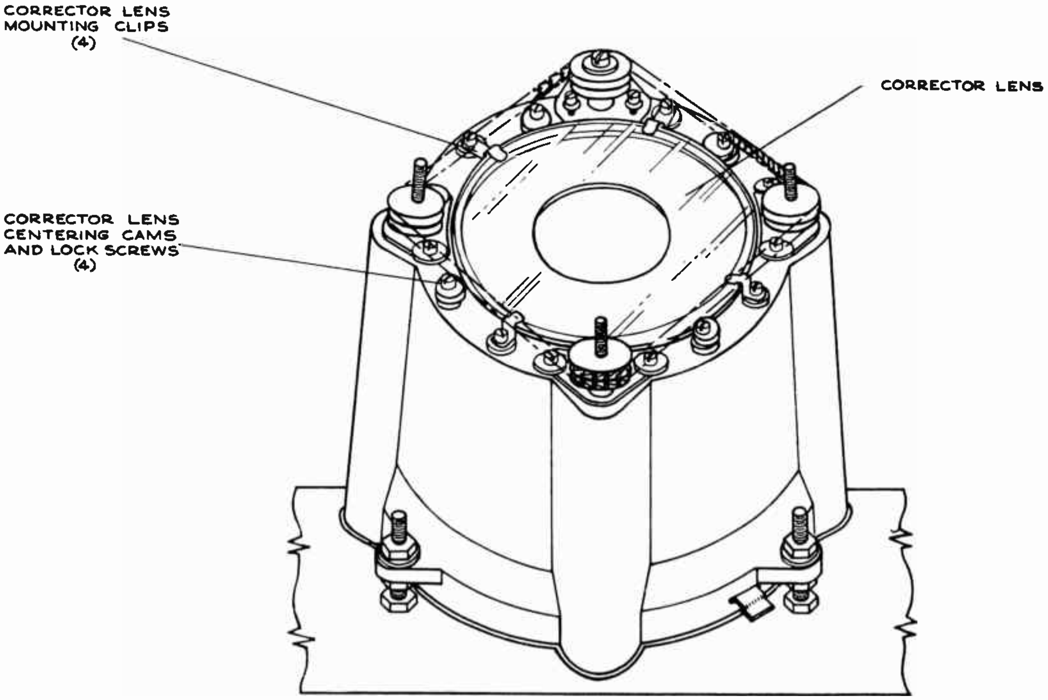

Fig. 14-7

Handling and Cleaning. – As we learned, the corrector lens is made of a relatively soft plastic material. It can be scratched easily or otherwise damaged by improper handling. Keep your fingers off the surface; handle the lens by the edge. Even rubbing it with a cloth may ruin the surface. If dust accumulates on the surface, it may be swept off with a very soft camel's hair brush. There probably will be no occasion to do so, but if the lens requires cleaning, this may be done with a solution of "Dreft" and water. Do not use cleaning fluids or other such untested preparations. The chemicals in such solutions may attack and ruin the surface of the lens. Handle the lens with the proper respect and care you would give any piece of precision optical equipment.

THE PLANE MIRROR

14-5. After the light passes through the corrector lens, it impinges upon the plane mirror. The location of the plane mirror in the system is shown in Fig. 14-1. This is a front surfaced mirror, rectangular in shape. The plane mirror must be front surfaced for the same reasons that the spherical mirror is – that is, to prevent absorption of light, and refraction which might result in ghosts and distortion of the picture. The function of this mirror is to direct the light received from the corrector lens onto the rear of the directional screen.

Incorporating a mirror in this system makes it possible to achieve a considerable saving in cabinet space. For a given magnification of the picture, there is a fixed distance from the spherical mirror to the screen, for each particular system design. In the home projection receiver, this distance is in the order of 4 feet. By incorporating a plane mirror, and bending the light, we can confine this total distance of 4 feet in a considerably smaller cabinet space by breaking it up into two parts. For the first part of its path, the light travels upward in the cabinet, to the mirror and then goes horizontally onto the viewing screen. The effect on the viewed picture is substantially the same as if the total distance had been a straight line.

The mirror is positioned at an angle of 45 degrees with respect to the axis of the optical barrel, in order to project the light properly on the vertical viewing screen.

THE DIRECTIONAL SCREEN

14-6. One of the major problems encountered in the projection television system is that of obtaining adequate brightness in the picture on the viewing screen. This problem is a difficult one because the brightness is reduced in proportion to the optical enlargement of the picture, and also because the efficiency of the optical system is low.

A non-directional projection screen causes the light from the picture to be diffused equally in all directions. This means that the picture will be seen with approximately the same brightness, regardless of the angle from which it is viewed. However, viewing the picture from extreme angles is undesirable because of the distortion of perspective that occurs. The placement of the receiver in the room, and the arrangement of furniture, also make it unlikely that the picture will ever be viewed from such extreme angles. It is apparent therefore, that much of the light which is sent to such wide angles will be *wasted.*

If, instead of wasting this wide-angle light, we concentrated it into useful viewing angles, the picture brightness could be increased without an increase of light output from the kinescope. This desirable effect may be accomplished by the use of a so-called "directional" viewing screen.

Physical Characteristics. – The directional screen is composed of three layers of plastic material. The front layer and the rear layer are made of molded Plexiglas. They are separated by a thin sheet of vinylite, 0.010 inch thick. A cross section, showing the construction of the screen, looks like this:

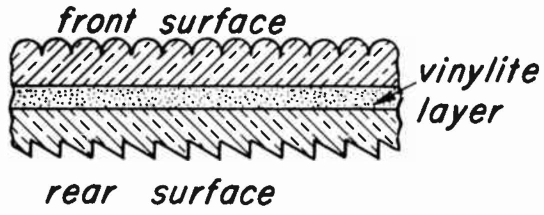

Fig. 14-8

Note that the front and rear layers are not flat, but are formed as lenses, the characteristics of which we will discuss later. The physical dimensions of the screen are such that the exposed part of the screen forms a rectangle about 15 inches high by 20 inches wide. The screen is rigidly mounted on the front of the cabinet, and is not adjustable in any way. The placement of the directional screen can be seen in this photograph of the model 9PC41 receiver.

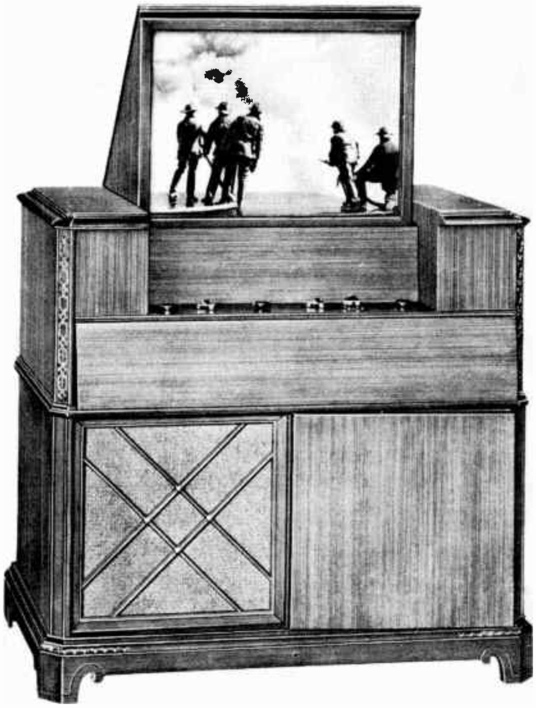

Fig. 14-9

The entire screen is produced in a single operation. The vinylite sheet is placed between the two layers of Plexiglass, and formed in a heated press, by methods already described for the corrector lens.

Viewing Angles. – By confining the viewing angles to certain limits, it is possible to increase the brightness of the picture. The directional screen used in projection receivers usually provides a horizontal viewing angle of approximately plus and minus 25 degrees, as measured from a perpendicular through the center of the screen, as shown in Fig. 14-10

As long as the viewer remains substantially within these angles, he will see a satisfactory picture. However, as he moves outside of these angles, the brightness begins to drop off rapidly. This effect may restrict the seating arrangement of the viewers, but is usually of no great consequence.

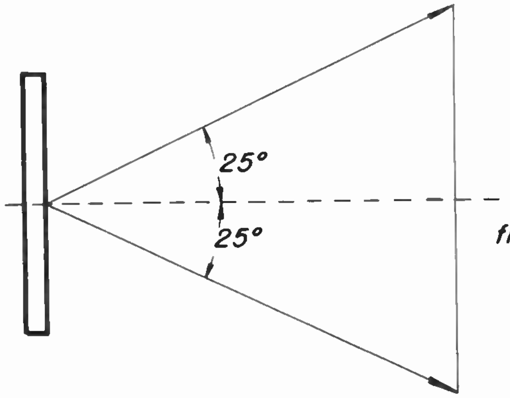

HORIZONTAL VIEWING ANGLE

Fig. 14-10

The vertical viewing angles of this screen are approximately plus and minus 10 degrees as measured from a perpendicular through the center of the screen, like this:

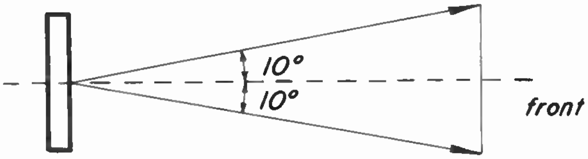

VERTICAL VIEWING ANGLE

Fig. 14-11

The vertical angles of viewing do not place much of a restriction upon the observer since these are more or less normal viewing angles anyway. The vertical directional effects will generally not be noticeable unless you are in the habit of viewing television while lying flat on the floor, or being suspended from the ceiling.

Screen Lenses. – We mentioned before that the front and rear plastic layers of the screen were lenses. These lenses actually produce the directional effects of the viewing screen. The rear surface of the screen has a so-called *Fresnel lens* moulded into it. This is shown here:

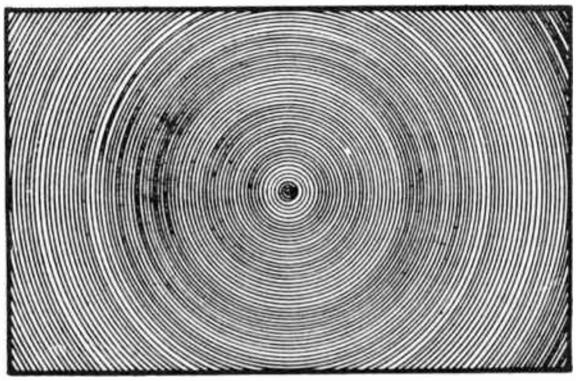

REAR SURFACE "FRESNEL" FIELD LENS.

Fig. 14-12

Fresnel lenses are used in lighthouses and beacon lights, to concentrate the light into a narrow beam. It performs basically the same function for the television screen by concentrating the light into narrow viewing angles. The pattern of light produced by the Fresnel lens is circular in effect, and does not have sufficient horizontal directivity to permit viewing the picture from normal horizontal viewing angles. In order to extend the *horizontal* viewing angles, the front surface of the screen has a large number of vertical cylindrical lenses moulded into it. There are 100 of these cylindrical lenses per inch. A front view of the screen, with the lenses exaggerated, would look like this:

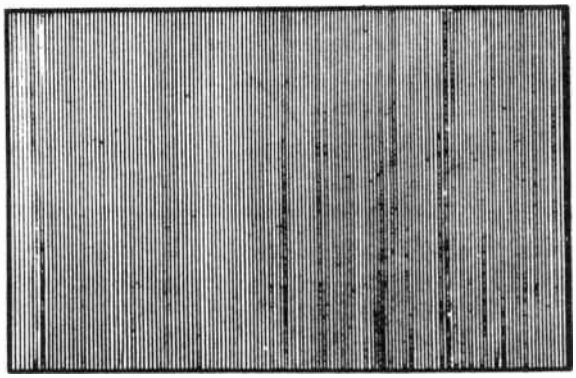

FRONT SURFACE VERTICAL RIBS

Fig. 14-13

The actual effect of the vertical lenses upon a light beam is shown here:

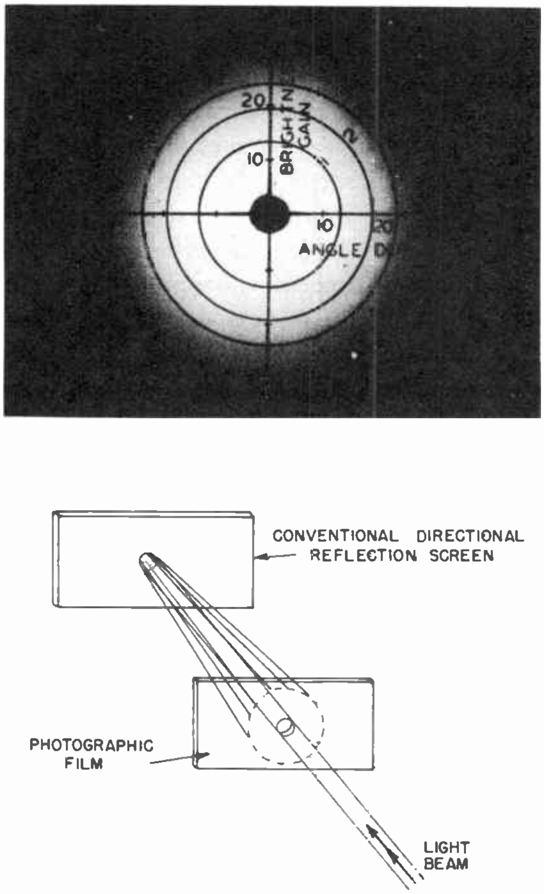

Fig. 14-14 (a)

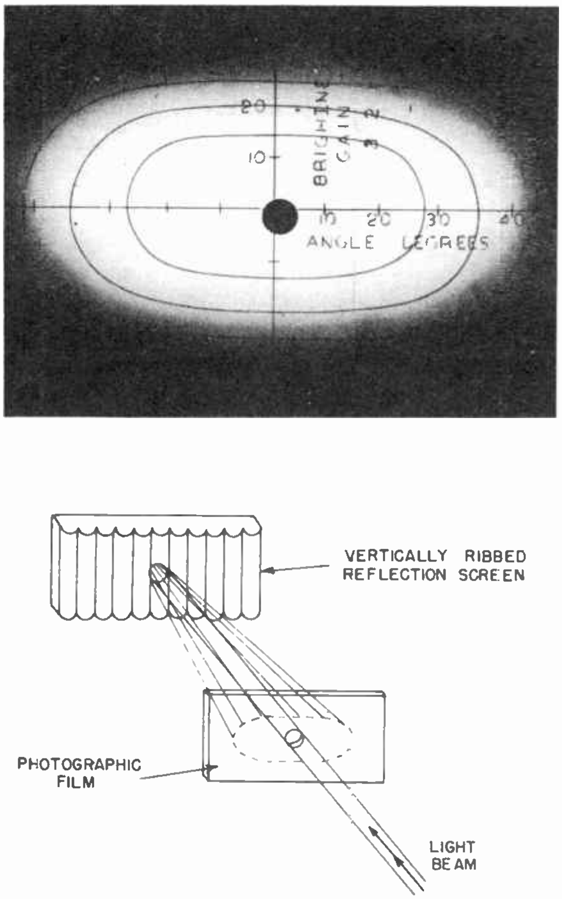

Fig. 14-14 (b)

In Fig. 14-14 (a) we can see the effect upon the light of the Fresnel lens alone The resultant light pattern is circular, and is too narrow for practical horizontal viewing. When the vertical lenses are added, the effect is as shown in Fig. 14-14 (b). Note that the horizontal directivity has been appreciably widened, without any particular change in vertical directivity.

The vinylite sheet between the two screen layers serves to make unnoticeable an optical interference pattern, or moire effect, that would normally exist, due to the combining of the Fresnel and cylindrical lenses.

Brightness Gain. – Due to its directional properties, the screen described here has a gain in brightness over a non-directional screen of approximately 7.5. This brightness gain is substantially uniform over the entire surface of the screen. This is considerably better than the gain that can be obtained with other types of directive screens, such as can be made of ground-glass, leaded screens, impregnated-fabric, and other similar types. The brightness gain of such screens operating under similar conditions could not exceed 3.5.

Room Light. – Another advantage of the three layer directional screen is the fact that light in the room which falls on the screen will not be reflected back to the viewer's eye under certain conditions. These conditions are: (1) That the observer is located within the normal viewing angles; and (2) That the source (or sources) of the room light lies outside of the normal viewing angles. If these conditions are met, the screen will appear dark in relation to the room lighting. This permits the use of more room lighting than with conventional screens and allows more comfortable viewing for the observer.

Handling and Cleaning. – The plastic material of the front and rear layers of the viewing screen is extremely stable and is unaffected by moisture, sunlight, fingermarks or furniture polish. If cleaning is required, this should be done with a solution of "Dreft" and water. Do not use any chemical cleaning solutions as these may damage the plastic surface.

THE OPTICAL BARREL

14-7. The optical barrel is a heavy metal container in which the spherical mirror, corrector lens, kinescope holder and kinescope are mounted. One of the reasons for constructing the barrel of thick metal, is to prevent the passage of X-rays, developed as a by-product of the high accelerating potential (30,000 volts). The barrel has provisions for making various adjustments of optical focus, centering and also of the tilt of the optical barrel. There are two variations of the optical barrel, differing mainly in the means of adjustment, which will be described here. Basically, both serve the same purpose. One type of barrel uses a chain drive adjustment for focusing, while the other type uses a simple screw adjustment.

Optical Barrel With Screw Adjustment. – A sketch of this type of optical barrel for a projection receiver is shown here:

This drawing shows how the corrector lens is mounted into the top of the barrel and held by the mounting clips (or spring fingers). Also indicated are all the various mechanical adjustments. We shall give a brief description of these adjustments now and later on see how they are made in actual practice. It is important to remember that the optical system has been properly adjusted at the factory, and in general no radical adjustment changes are required. In general only minor touch-up adjustments are necessary. Let us first see the kinescope adjustments.

1. Optical focus adjustment. This is situated at the top of the focusing plate assembly and moves the assembly, and the kinescope, vertically for optical focus. As you can see in the drawing, this adjustment is of the screw type. The head of the screw is supported by a bracket rigidly mounted to the body of the optical barrel. The threaded portion of the screw engages a threaded bracket on the kinescope adjustment assembly. Therefore, rotating the optical focus adjustment screw will cause the kinescope to move up or down vertically within the limits fixed by the vertical slots. As you can see in the drawing, there are two of these vertical slots. Each one is fitted with a lock screw so that when the correct optical focus has been found, the assembly can be locked in position.

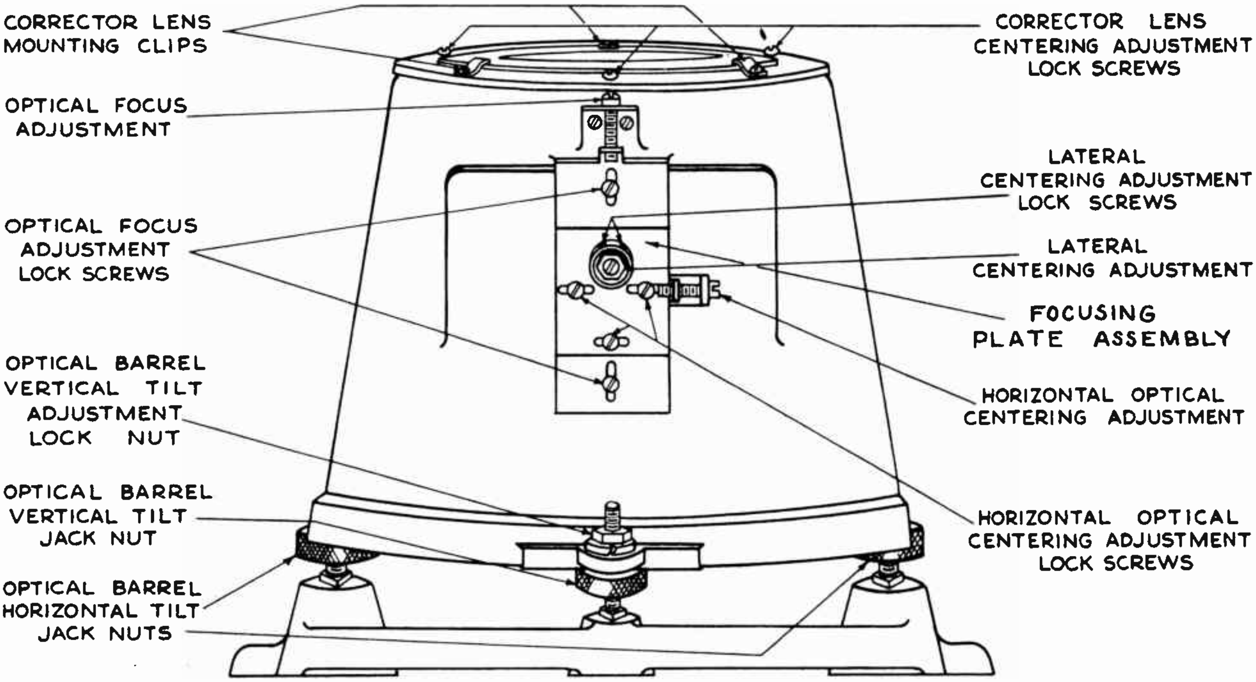

Fig. 14-15

2. *Horizontal optical centering adjustment.* This adjustment is located at the right center portion of the focusing plate assembly and permits the kinescope to be moved from right to left horizontally. As shown in Fig. 14-15, this adjustment is also of the screw type (similar to optical focus). Rotating the screw will cause horizontal (right to left) movement of the kinescope within the limits of the horizontal slots. There are three of these, and each one is fitted with a locking screw to lock the assembly horizontally after the corrector position has been found.

3. *Lateral optical centering adjustment.* This adjustment is located at the center of the focusing plate assembly and permits the kinescope to be moved laterally. This is actually a horizontal movement but is at right angles to the regular horizontal motion. In other words, as we are facing the optical barrel in the drawing, the kinescope, which is mounted vertically, will move toward you or away from you. The actual adjustment is accomplished by a heavy threaded bolt and nut assembly. When the nut is rotated, the threaded bolt, fastened to the kinescope holder, moves the kinescope laterally. Two locking screws are provided, to hold the nut in correct position.

4. *Optical barrel tilt adjustments.* These adjustments are located at the bottom of the optical barrel and permit the barrel to be leveled horizontally and tilted vertically. There are two adjustments for horizontal setting and one for vertical. These adjustments actually constitute the mounting for the optical barrel. As you can see in the drawing, three brackets are provided around the bottom edge of the optical barrel. The barrel proper rests upon three large round jack nuts screwed onto a bolt which fits through each one of the three brackets. By rotating any jack nut, it is possible to raise or lower any corner of the optical barrel. The jack nuts on either side of the barrel are used to level it horizontally, while the jack nut in front of the barrel is used to provide proper vertical tilt, which is about 7 degrees. Lock nuts and lock washers are provided for all three adjustments to fasten the barrel securely in place after the correct adjustments have been made.

Kinescope Holder. – The kinescope proper is supported by the kinescope holder. A top view of the holder with the kinescope inserted is shown here:

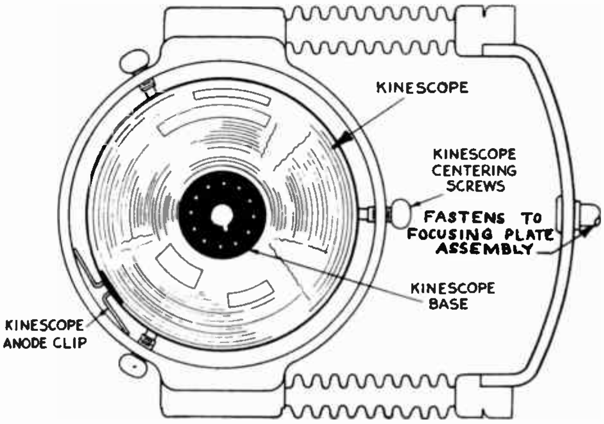

Fig. 14-16

The holder is so supported that it may be moved vertically, horizontally, and laterally during the optical adjustments. Note the three kinescope centering thumb screws which hold the bulb of the kinescope in place and permit it to be correctly centered.

Optical Barrel With Chain Drive Adjustment. – This barrel has a different mechanism by which the optical focus and centering adjustments are made. However, the same type of adjustments can be made as in the case of the other optical barrel. Let us first examine the kinescope holder. A top and side view are shown here:

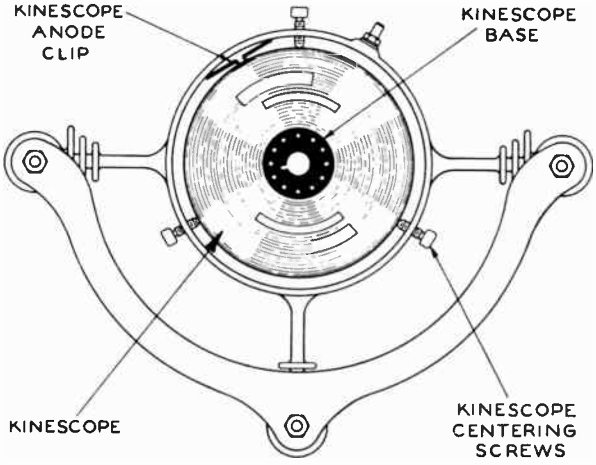

Fig. 14-17 (a)

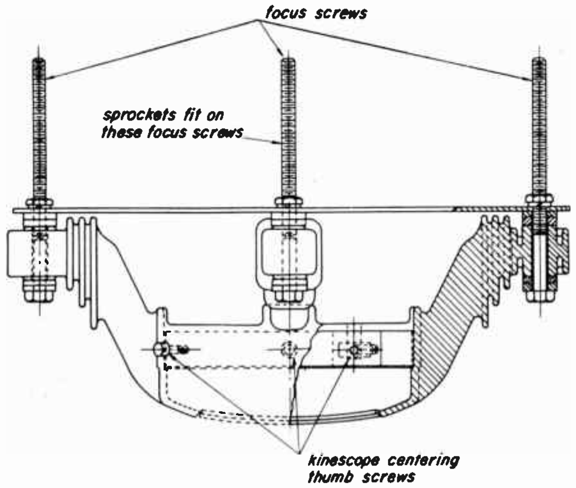

Fig. 14-17 (b)

The kinescope holder is mounted to the optical barrel by means of three long threaded stationary bolts. These can be seen in the side view (Fig. 14-17b). The three threaded bolts protrude through the top of the optical barrel and are held by three threaded sprocket wheels (focus sprockets). The three focus sprockets are made to turn simultaneously by means of a connecting drive chain. The arrangement looks like this:

An idler sprocket is employed to take up the slack in the drive chain so that no slippage occurs. These elements may also be seen in Fig. 14-18. Rotating the focus sprockets one way or the other causes vertical movement of the kinescope holder (and kinescope) and thus accomplishes optical focusing.

For horizontal and lateral centering, the entire mounting plate, which holds the sprockets, may be shifted around by first loosening the six focus sprocket support mounting screws shown in the Fig. 14-18. We will describe the adjustment procedure in the next section.

INSTALLATION PROCEDURE

14-8. The installation procedure described here is for the RCA model 9PC41, as a typical projection receiver. However, this is basically the same for other models. In all cases, make sure that you read the service data booklet for each individual model before unpacking or assembling the receiver. Certain components of the receiver are easily damaged and must be handled properly.

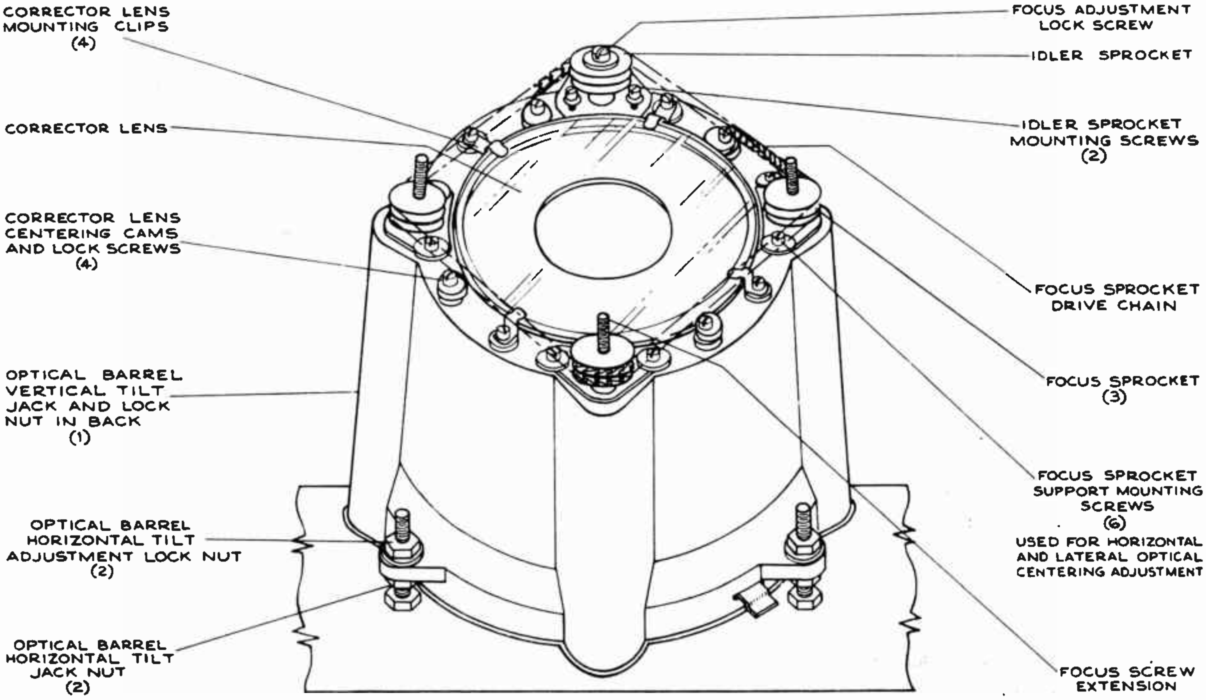

Fig. 14-18

Don't be in too big a hurry to tear open the crate! Read your instructions first!

Unpacking and Assembly. – As a rule the receiver is shipped complete in one carton. All tubes are mounted in their sockets with the exception of the 5TP4 kinescope. The kinescope is packed in a special carton and is shipped separately.

The shipping carton for the receiver consists of a plywood box fastened together with nails. The box must be opened by removing the front side. Be very careful in prying this side loose that you do not permit the prying tool to enter the box, as the front of the cabinet may be seriously damaged in so doing. Once the front side of the box has been carefully removed, the cabinet may be slipped out, taking care not to scratch it. You don't have to worry about sliding the cabinet on its bottom, as there is a flat wooden skid attached to it for this purpose. This skid should be left on the cabinet until it has been set in its permanent position. When this has been done, the skid should be removed. This may be done very easily by removing the two nuts shown in this figure:

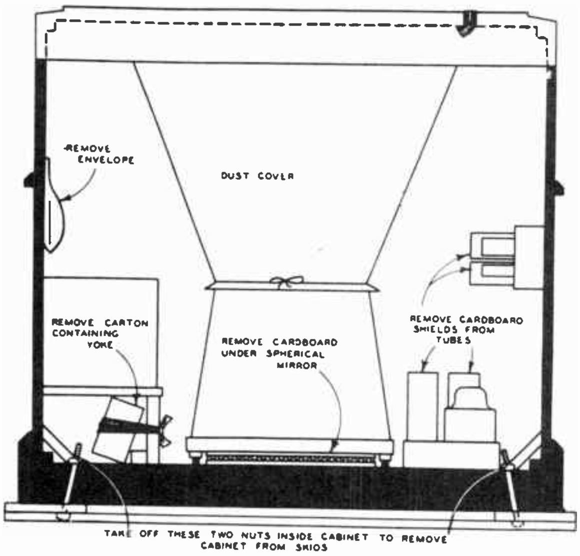

Fig. 14-19

When the nuts have been removed, lift the cabinet off the skid. The set is very heavy and at least two men should be used to lift it. As shown in Fig. 14-19, there is some protective shipping material that must be removed before the set can be placed in operation. Remove the cardboard shields from the tubes and the cardboards from underneath the spherical mirror. Make sure that all tubes are firmly seated in their sockets. An envelope will be found fastened to the inside of the cabinet above the horizontal deflection chassis. This contains the knobs and should be removed and set aside. The deflection yoke is found in a carton taped to the horizontal deflection chassis shelf support member. This should be removed and set aside. A small carton containing the remote brightness and contrast controls will be found fastened to the cabinet. This should be taken out. Untie the dust cover, and tie it to the side out of the way. You are now ready to set up the receiver.

The first thing to do is to remove the speaker grill. This is done by taking out four Phillips head screws from the front four corners of the grill. Disconnect the speaker cable from the speaker, and set the grill to one side. Remove the corrector lens from the top of the optical barrel, observing the necessary precautions previously described. This is done by loosening the four screws holding the corrector lens mounting clips as shown in Fig. 14-18. Do not loosen any of the screws that hold the corrector lens centering cams or plate.

Caution. – Before proceeding further, make sure that the high-voltage filter condensers are discharged. Do not assume that someone else has taken care of this. Check it yourself and do it every time you come in contact with a receiver that has been operated, even if it hasn't been on for weeks. The filter condensers may be discharged by the following procedure. Take a clip lead, and fasten the clip securely to the optical barrel. Make sure a good electrical contact is made then take the free end of the lead and touch it several times to any metal surface of the *kinescope holder.* Continue to make repeated contacts until no visible sparking occurs. Then hold the lead on the kinescope holder for a few seconds. The equipment is now safe to work on until the next time it is turned on. Incidentally, *make sure the set is not plugged in while you are working on it,* so you don't get any unpleasant surprises.

A kinescope which is removed from an undischarged circuit may cause a shock if the high-voltage cap is touched a long time later. Another point to remember is that, if the high-voltage circuit is not grounded for a sufficiently long time, a charge may reappear in sufficient force to cause an uncomfortable shock.

The directional screen, plane mirror and spherical mirror should now be cleaned, following the procedures already given.

Checking the Optical System. – It is now necessary to check the optical system for focus and alignment. This is best accomplished by the use of the test lamp shown here:

Fig. 14-20

This lamp is designed to replace the kinescope during alignment and has a permanent test pattern on the tube face. Illumination of the test lamp is accomplished by a standard 25 to 40 watt electric light bulb. By observing the permanent test pattern it is possible to check the performance of the optical system. Let's take a look at the normal test pattern shown in Fig. 14-21, and the four pictures of incorrect test lamp patterns in Fig. 14-22, in order to see how they can be used in setting up the optical system of the projection receiver. These should be studied as they will help you in the actual alignment procedure.

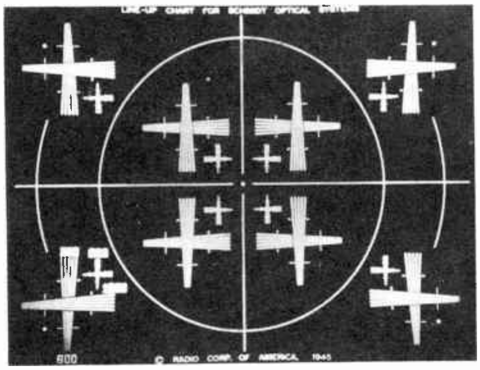

Fig. 14-21 Normal test pattern

The test lamp should be placed in the kinescope holder face down, and centered by adjusting the kinescope centering screws. The kinescope holder is shown in Figures 14-17(a) and (b).

In Figure 14-17(a) we are looking *down* into the optical barrel, and the base of the kinescope or test lamp is at the top. The test lamp cord should be plugged into a 110 volt outlet and the lamp turned on. Replace the corrector lens and rotate the test lamp until the test pattern is right side up and square on the screen. The center hole in the corrector lens should now be covered with a piece of black cardboard or heavy black cloth. This prevents light from going directly through the hole. If this occured, it would result in a decrease of resolution (fine detail) of the pattern on the screen.

Loosen the optical focus adjustment lock screw as shown in Fig. 14-18, and adjust the optical focus for the best overall definition on the screen. The best definition occurs when the

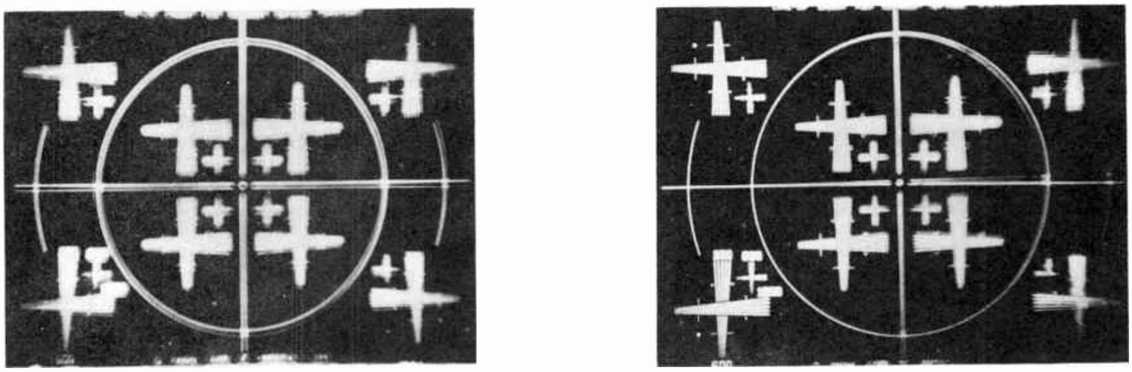

(a) Correct alignment. Picture out of focus showing parallel double lines.

(b) Horizontal double lines not parallel, showing incorrect horizontal alignment.

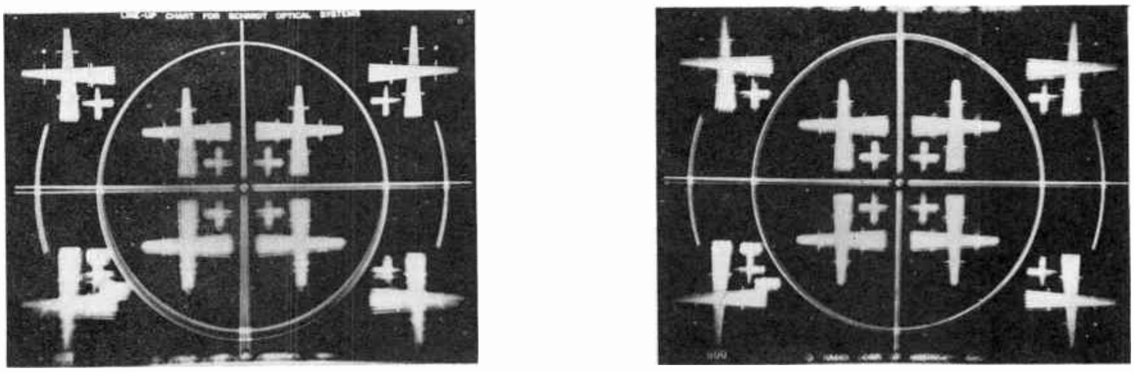

(c) Vertical double lines not parallel due to incorrect lateral alignment of optical barrel.

(d) Distorted halo around central dot due to misalignment of corrector lens.

Fig. 14-22

wedges on the test pattern are most clearly defined. If the optical system is properly aligned, you should see at least 900 line resolution over the entire screen. In other words, the portions of the wedges representing 900 line resolution should stand out clearly and show the individual wedge lines. If you cannot obtain 900 line resolution, it will be necessary to align the optical barrel. This may be accomplished with the use of the test lamp by the following procedure.

1. Turn the optical focus adjustment until the vertical and horizontal lines become double. If the double lines are parallel, the test lamp is properly centered. If not, horizontal or lateral centering is required.
2. Horizontal centering. Loosen the six focus sprocket support mounting screws, and the two idler sprocket support mounting screws as shown in Fig. 14-18. If the *horizontal* lines are not parallel, the sprockets should be slid sideways in either direction until the lines are parallel.
3. Vertical centering. If the *vertical* lines on the test pattern are not parallel, the sprockets should be slid straight forward or backward until the lines are parallel.
4. When this has been done, the six sprocket support mounting screws should be tightened. Be sure the sprockets do not shift during the tightening.
5. The three focus screw extensions (Fig. 14-18) should all be of equal height. If this is not the case, remove the drive chain temporarily and readjust the extensions until they are exactly equal. You can check this with a ruler or by counting the visible threads on the extensions.
6. See that the drive chain is properly in place on all four sprockets, and then slide the idler sprocket back to take up the slack of the chain. When the chain is pulled up tight, tighten the two idler sprocket support mounting screws.
7. Corrector lens centering. There is a small dot in the center of the test lamp. Turn the focus adjustment until a "halo" appears around the dot. This effect is similar to the ring around the moon seen on some nights. The halo should be symmetrical around the dot. If it is not, loosen the four corrector lens centering cam lock screws (Fig. 14-18) and slide the corrector lens around until the halo is symmetrical. When you have done this, bring the cams up firmly against the edge of the lens and tighten the four lock screws. Be careful not to move the lens while doing this.
8. Check of optical barrel tilt. Adjust the optical focus control to beyond the focus range and observe how the picture goes in and out of focus. All parts of the picture should go through focus at the same time (although not necessarily with the same resolution). If this is not the case the optical barrel does not have the proper alignment.
9. Alignment of optical barrel horizontal tilt. Turn the optical focus adjustment *counterclockwise* until the picture goes out of focus completely. Now turn it back clockwise and watch carefully as the picture starts to come into focus. If one side

comes into focus before the rest of the picture, the barrel is out of horizontal alignment. Loosen the two horizontal tilt adjustment lock nuts, as shown in Fig. 14-18. The side which comes into focus first is too low and must be raised. At the same time, the opposite side is too high and must be lowered. Turn the horizontal tilt jack nuts to raise the one side and lower the other side, until both sides come into focus simultaneously.

10. Alignment of optical barrel vertical tilt. Observe the top and bottom as the picture comes into focus by turning the optical adjustment clockwise. If the top comes into focus before the bottom it means that the part of the barrel nearest the front of the cabinet is too low. It can be raised by first loosening the vertical tilt locknut (Fig. 14-18) and then raising the front of the barrel by turning the vertical tilt jack nut until the top and bottom come into focus simultaneously. Obviously, if the bottom comes into focus first, the front of the barrel must be lowered.
11. When the proper barrel tilt has been obtained, the entire picture should come into focus at the same time. When this occurs, tighten down on all three lock nuts, being careful not to disturb the adjustments.
12. You should now go back and check the horizontal and lateral optical adjustments. If necessary readjust as previously described.

When all adjustments have been made correctly, remove the corrector lens, unplug the lamp and remove it by loosening the kinescope centering screws equally and *just enough* to permit its removal. We are now ready to install the kinescope.

Installation of Kinescope. – The kinescope is shipped in a separate carton and must be handled with the utmost care. Do not open the shipping carton or handle the kinescope unless you are wearing safety glasses. Keep other people away while installing the kinescope. The carton should be saved for possible future use.

Open the shipping carton at the correct end, as marked. Handle the tube only by the *neck*. The reasons for this have already been discussed.

The high voltage connection must be made to the recessed cavity cap in the kinescope. A small brass clip will be found in the carton containing the deflection yoke, and is used for this purpose. This anode clip must be installed horizontally as shown in Fig. 14-17(a), so that it will not protrude out of the kinescope holder. The kinescope tube is installed face down and positioned so that the socket key points toward the television chassis. Tighten the three kinescope centering screws equally to center the tube in its support. Do not apply much pressure as you may crack the tube. Try to maintain exactly the same centering as the test lamp.

You are now ready to replace the corrector lens. Wipe it clean with a piece of lens tissue and when you replace it, make sure that the arrow on the lens points to the *rear* of the cabinet, and that the lens is replaced in the same position as determined by the test lamp alignment. Secure the lens with the mounting clips and tighten the clip screws.

Remove the deflection yoke from its carton. You will find that one end of the center bakelite tube is *slotted*. Hold this end *up* and slide the yoke over the neck of the kinescope. Position the yoke so that the leads come out toward the *rear* of the cabinet. You may now connect the kinescope socket to the base of the tube. Do not apply any extreme pressure while doing this. The socket should go on fairly smoothly. Make sure the base key is properly lined up and if necessary wiggle the socket a bit as you press it on. Be certain it is all the way on.

You will find a cable sleeve in the optical barrel dust cover. Slip the yoke cables out through this sleeve. The three prong plug on the *unshielded* yoke cable should be plugged into the r-f, i-f chassis (Fig. 14-2). The two prong plug on the *shielded* yoke cable should be plugged into the horizontal deflection chassis. A shield braid extension will be found protruding from the shielded cable. This should be securely grounded to the horizontal deflection chassis by means of the screw provided for this purpose.

Caution. – *The receiver must not be turned on with the deflection yoke cables disconnected.* If you do this, you may cause the destruction of the kinescope screen.

The cover of the horizontal deflection chassis should now be removed. You will find that the high voltage filter capacitors are tied into their clips with string for shipping purposes. Remove the strings and replace the chassis cover.

You may now replace the speaker grille and fasten it in place with the four Phillips head screws previously removed. Connect the speaker cable to the speaker.

Check all chassis interconnecting cables carefully to make sure that they are plugged in securely, and in the proper sockets. You can check this with the aid of Fig. 14-2. Connect the antenna transmission line to the two terminals at the upper left corner in the rear of the cabinet and plug in the power cord. Due to differences between the test lamp and kinescope, the optical focus should be rechecked by the scanning line method as described below.

Scanning Line Method of Optical Alignment. – The following procedure for optical alignment may be used when a test lamp is not available, or for some reason its use is undesirable. The results obtained with this method may not be quite as good as with the test lamp, but in most cases, will be satisfactory.

In this method, the kinescope must be properly mounted in the holder and centered by means of the three centering thumb screws. This has already been described. It is necessary to prevent vertical deflection and this may be done most conveniently by removal of the vertical sweep output tube (6K6-GT) V118. This tube is located on the r-f, i-f chassis, and its position on the chassis is shown in Fig. 14-26.

Before turning the receiver on, make sure that the brightness and contrast controls are *fully counter-clockwise*. Turn the set on, and give it a chance to warm up for a minute or so. Now, *slowly* rotate the brightness control clockwise until a *dim* line appears on the screen. You must be very careful at this, as turning the brightness up too far may damage the kinescope. What you will see on the screen will be a single line whose angle will depend upon the position of the deflection yoke on the neck of the kinescope.

Turn the deflection yoke carefully until the line is perfectly horizontal on the screen. Rotate the optical focus adjustment until you can see two distinct lines on the screen. If the optical system is in alignment, the two lines should be parallel. If they are not, loosen the six focus sprocket support mounting screw (as previously described) and slide the sprockets to one side or the other until the lines are parallel. When this has been accomplished, rotate the deflection yoke until the two lines are *vertical*, being careful not to strain the yoke cable. There should be enough slack in the wiring to enable you to rotate the yoke enough without any difficulty. If the two vertical lines are not parallel, slide the sprocket straight backward or forward until they are parallel. Check again to see that the lines are parallel when they are horizontal. If they are parallel, both horizontally and vertically, the alignment is correct. Tighten the six focus sprocket support mounting screws, being careful not to change the settings. Position the yoke so that the lines are exactly horizontal, and tighten the yoke clamp. Turn the focus adjustment until you get just one horizontal line in focus. Shut off the set and replace the vertical sweep output tube. Turn the set on again, and follow the regular picture adjustment procedure as outlined in this lesson.

OPERATION AND ADJUSTMENTS

14-9. Many of the circuits of the 9PC41 projection receiver are the same or similar to those found in the 630TS type direct-view receiver. Therefore, unless there is a difference in adjustment or alignment procedure, such information will not be repeated here. We will simply indicate in what previous lesson the procedure may be found.

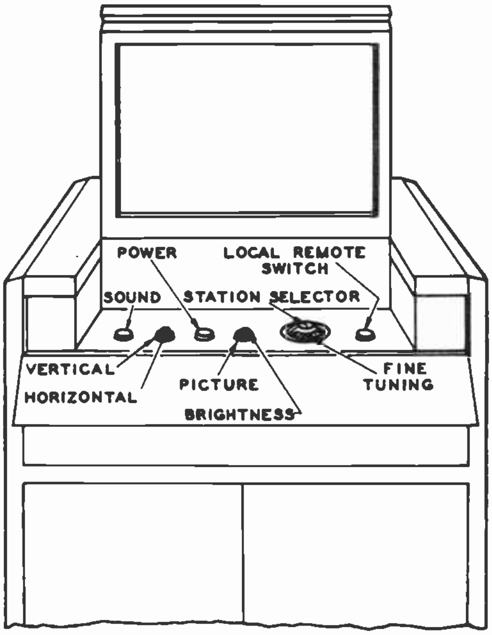

Fig. 14-23 Front panel controls (9PC41)

Preliminary Adjustments. – Turn the power switch on, shown in Fig. 14-23. Rotate the picture and brightness controls fully counterclockwise. Now advance the brightness control (inner knob) slowly until a moderate glow appears on the screen. Look down into the optical barrel and adjust the electrical focusing control until the lines of the raster are in sharpest focus. The electrical focus control is located on the back of the horizontal deflection chassis, as shown here.

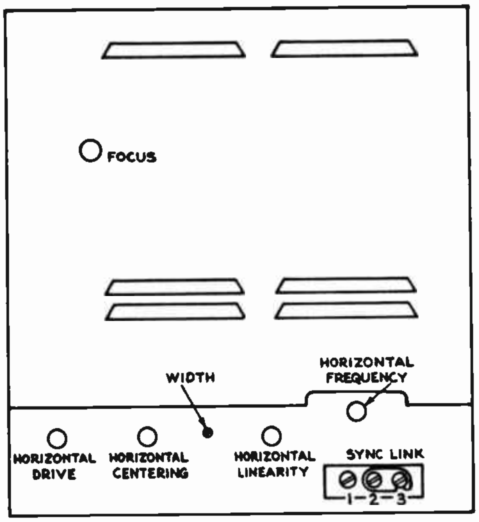

Fig. 14-24

Next, adjust the *optical* focus until the raster lines are in sharpest focus on the *screen.*

Rotate the deflection yoke gently, around the neck of the kinescope until the raster lines are perfectly horizontal on the screen. When this has been done, tighten down the yoke clamp to hold the yoke in position, but don't force it. You have now finished the preliminary adjustments.

Horizontal Alignment. – It will now be necessary to obtain a test pattern to make the following adjustments. Horizontal oscillator checking and alignment is done in the same way as for the 630TS receiver.

Height and Vertical Linearity Adjustments. – Adjust the height control until the picture fills the screen vertically. The height control is labeled R149. It is located on the rear apron of the r-f, i-f chassis as shown here:

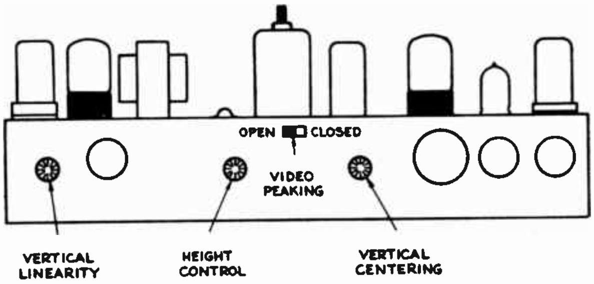

Fig. 14-25

The vertical linearity control (Fig. 14-25) should now be adjusted until the test pattern is symmetrical in the vertical direction. That is to say, there should be no crowding or spreading of the picture vertically. The height and linearity adjustments have some interaction between them and you will have to repeat the adjustments possibly several times before getting the desired results.

Now adjust the vertical centering control (Fig. 14-25) until the picture is aligned with the mask. If proper centering cannot be obtained, it may be necessary to shift the kinescope in the holder. If this is done, you will have to check the optical adjustments as previously described.

Width and Horizontal Linearity Adjustments. – The horizontal drive control is located on the rear apron of the horizontal deflection chassis (Fig. 14-24). Turn this control clockwise until the picture just begins to crowd at the right side, and then back off a little bit to remove the crowding. Now, adjust the horizontal linearity control (Fig. 14-24) until the test pattern is symmetrical from left to right. The drive and linearity controls have some interaction and you should go over these adjustments until the desired results are achieved.

Adjust the *width* control (Fig. 14-24) until the picture just fills the mask on the viewing screen horizontally. While you are doing this, keep the picture centered with the horizontal centering control (Fig. 14-24). If proper horizontal centering cannot be obtained, it may be necessary to shift the kinescope in its holder as previously described. If this is done be sure to recheck the optical adjustments.

Focus. – Adjust the electrical and the optical focus for the sharpest definition of the vertical wedge of the test pattern.

Caution. – Before proceeding any further, check to see that all yoke and optical barrel lock screws are tight.

If everything is tight, pull the dust cover down and around the optical barrel and tie it securely in place as shown in Fig. 14-19. The cable sleeve of the dust cover must be tied very tightly around the cables to prevent any dust from entering through the sleeve. This is *very important,* because if dust should settle on the corrector lens, it will greatly reduce the optical efficiency of the system. This may result in a dim picture with poor definition. Dust is normally attracted to the inside of the barrel due to the action of the high-voltage present.

Check of R-f Oscillator Adjustment. – This adjustment is the same as for the 630TS receiver.

Antenna Trap Adjustment. – Interference may be encountered on certain channels from FM or TV broadcasting stations. A so-called *antenna trap* is provided to assist in the reduction of such interference. The trap adjustments are on top of the r-f tuning unit, and may be seen in the drawing of Fig. 14-26.

To adjust the trap in the field, the following procedure should be used.

1. Tune in the station on which the interference is observed.
2. Adjust both cores of the trap for minimum interference in the picture. Both cores should be kept approximately the same during adjustment.
3. After this has been done, turn one core about ½ turn from its previous position, and readjust the *other* one for minimum interference. Repeat this procedure until the point of minimum interference has been found.

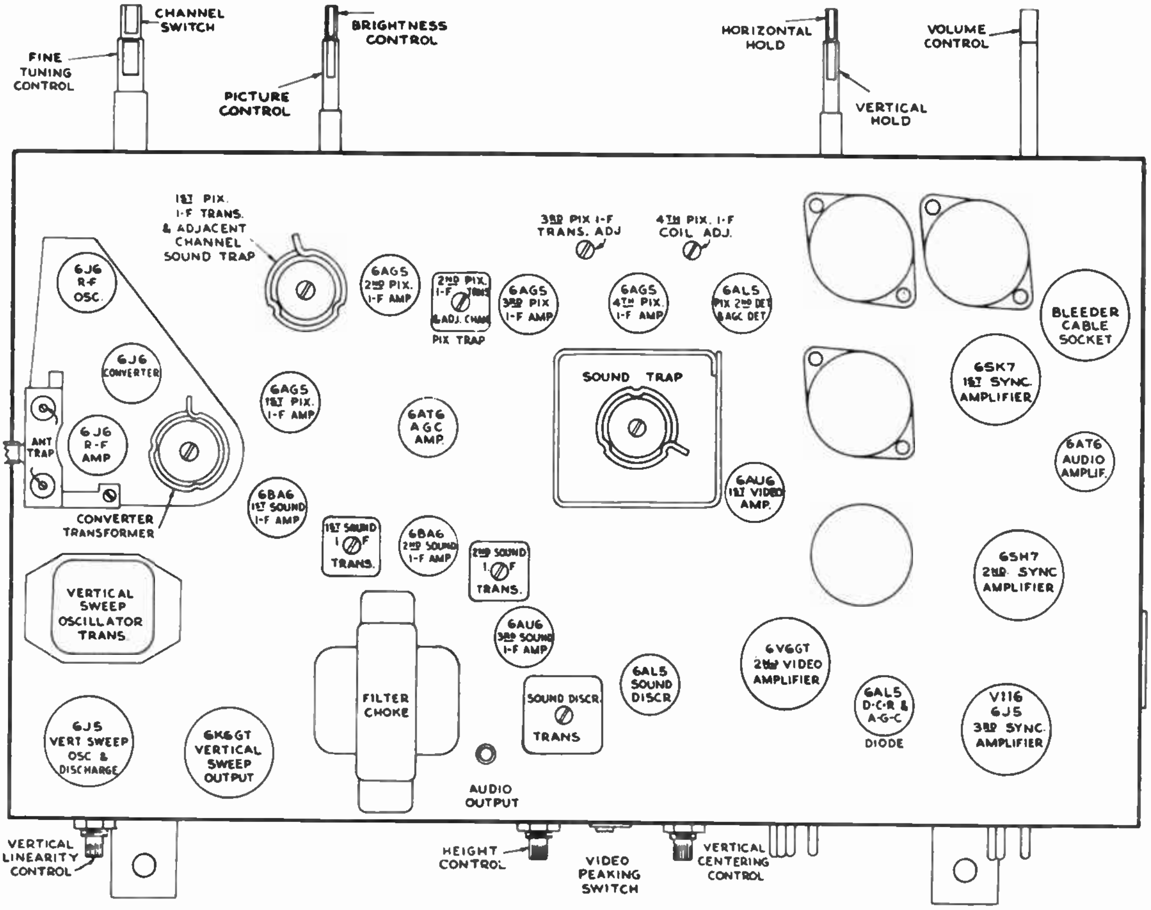

Fig. 14-26 Top view of r-f, i-f chassis

Video Peaking Switch. – In order to produce a possible improvement in picture definition (fine detail) a *video peaking switch* is provided. The location of this switch is shown in Fig. 14-25. Under normal receiving conditions, the switch should be left open. However, reception should be checked with the switch closed. If the pictures from the majority of channels look better with the switch closed, the switch should be left in that position. Otherwise leave the switch open. It is possible that when the switch is closed a condition known as *transients* may be produced on pictures with high contrast. This condition may be observed on the television picture by noticing whether there are white outlines just to the right of black portions of the picture. If so, transients are present, and the video peaking switch must be left open.

Remote Contrast and Brightness Controls. – Provisions are made in the 9PC41 receiver for brightness and contrast control from a remote point. This is provided for convenience so that you don't have to drag yourself out of your favorite arm chair to make these adjustments. The remote unit consists of a box in which the two controls are mounted, and a length of cable which runs to the receiver. This cable could conceivably run under a rug to keep it out of sight.

At the receiver end, the remote control cable plugs into the right side panel of the r-f, i-f chassis, after going through the *Local-Remote switch.* The location of the Local-Remote switch can be seen in Figs. 14-2 and 14-23, and the point of connection to the r-f, i-f chassis can be seen in Fig. 14-25. If it is desired to use remote operation, set the Local-Remote switch to the remote position. The brightness and contrast can now be controlled from the remote box after the cable connections have been made.

Ventilation. – This receiver draws 530 watts from the power line. (Most of this shows up as heat inside of the cabinet.) This is a lot of watts and it is very important to provide proper ventilation to keep the receiver from overheating. Adequate ventilation holes are provided in the bottom and rear of the cabinet. *These holes must not be covered or obstructed* in any way that impedes the ventilation. The customer should be strongly advised on this point. If the receiver is to be situated with the back of the cabinet near a wall, be sure to leave at least a 2 or 3 inch clearance between cabinet and wall.

CUSTOMER INSTRUCTION

14-10. When the receiver has been properly installed, the customer must be carefully instructed in its operation. The following procedure of operation is recommended. (See Fig. 14-23).

1. Raise the lid fully until the screen is in operating position.
2. Turn the POWER switch on and advance the SOUND volume control to approximately the mid-position. This is done so that sound will be heard as soon as the set warms up.
3. Set the LOCAL REMOTE switch to "LOCAL", and the station selector to a channel which is *not* in operation.
4. Turn the PICTURE control (outer knob) fully counter-clockwise so that no picture information will show at this time.
5. Starting with the BRIGHTNESS control fully counter-clockwise, rotate it slowly clockwise, until a glow of light appears on the screen. Back it off just enough to remove the glow.
6. Turn the STATION SELECTOR Switch to the desired channel.
7. Adjust the FINE TUNING, control for best *sound* fidelity, and SOUND volume for desired loudness.
8. Turn the PICTURE control clockwise until a test pattern (or picture) appears on the screen.
9. Adjust the VERTICAL hold control if necessary, by the following procedure. Move the knob until the picture is moving slowly *downward.* Then back off slowly until the picture locks vertically. Move it a hair more in this direction and you're all set.
10. Adjust the HORIZONTAL hold control if necessary until a picture is obtained. Normally, the control will hold its proper setting for a considerable time without readjustment. Some horizontal centering can be accomplished, if needed, by rotating the HORIZONTAL hold control. However, you must be careful not to throw the picture out of sync.
11. Adjust the PICTURE control for suitable contrast. This is best checked on a test pattern.
12. After the receiver has been on for a while, check the adjustment of the FINE TUNING control.
13. When switching from one station to another, it may be necessary to repeat steps 8, 9 and 11.
14. If remote operation is desired, set the LOCAL REMOTE switch to the "REMOTE" position. The brightness and contrast may now be controlled from the remote-control box.
15. When the set is turned on again after a period of idleness, it is generally not necessary to repeat the adjustments, provided that the controls have not been moved.

Note: An *interlock* switch is placed in the lid of the cabinet. This insures that the set will be automatically turned off when the cabinet is closed.

However, it is best to turn the set off by the POWER switch, always, before closing the lid.

Remember that merely *demonstrating* the operation of the receiver to the customer is not enough. You have to demonstrate, explain, point out the applicable parts of the customer instruction book, and have the customer operate the set himself several times until he can do it without making mistakes. You will recall that this was thoroughly discussed in Lesson 5. The requirements for effective customer instruction outlined therein apply just as well to projection receivers as to direct view receivers. If you make absolutely sure that the customer can operate the set properly under all conditions, you may save a callback later.

◆

NOTES

NOTES

NOTES

TELEVISION SERVICING COURSE

PREPARED BY

RCA INSTITUTES, INC.
A SERVICE OF RADIO CORPORATION OF AMERICA

HOME STUDY DEPARTMENT
350 West 4th St., New York 14, N. Y.

LESSON FIFTEEN

AUTOMATIC RECORD CHANGERS

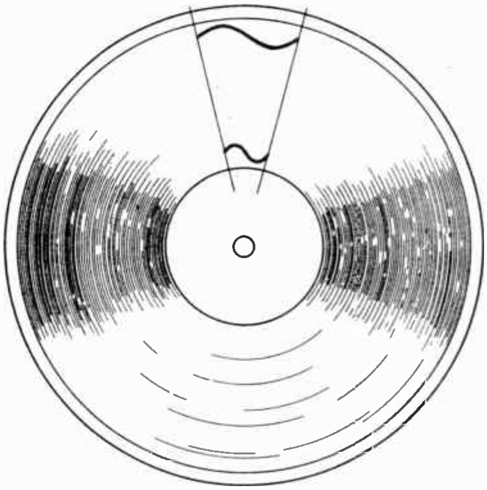

Lesson 15

RECORDS AND RECORD PLAYERS

15-1. Because many TV-Radio combinations contain record changers, you must become familiar with the operation of these machines and their servicing problems. In this lesson we shall discuss the operation and servicing of the three basic types of changers. The first type is the conventional changer for playing automatically a stack of either twelve 10-inch diameter records or ten 12 inch records, at a speed of 78 revolutions per minute (rpm). A later type of changer is designed to play records at either of three speeds: 78 rpm for conventional records, 33-1/3 rpm, or 45 rpm for fine groove records. The third type is the unique 45 rpm changer for 7 in. fine groove records.

Fig. 15-1. Three-speed record changer (VM Model 955).

Of course, you are not going to be required to build a changer, but only to repair and service it. To do this efficiently, though, you must have an understanding of the various parts in a changer and their operation. Some fundamental knowledge of the phono pickups, motors and drive mechanisms employed will be very helpful in servicing the changers. After discussing these basic features of a record player, we shall be more specific and go through the operation of the changers. In addition, you should know the various types of records that can be played, and their characteristics. These are the first things to be discussed here.

Records. - Commercial records for home entertainment purposes are made in *three sizes:* 12, 10 or 7 in. diameter. This does not include 16 in. commercial transcriptions for broadcast stations. Incidentally, transcription recordings often use a vertical cut, while the home records are always cut laterally. This means that the music or speech is recorded as lateral variation of the grooves of the record, while the vertical cutting method varies the groove depth. With the lateral method, the needle or stylus moves back and forth to cut into the record the information to be recorded; the playback needle is made to move laterally in the same way in order to reproduce the recorded music or speech.

The speed at which the records are cut, which is the same speed at which they must be played back, may be 78, 45, or 33-1/3 rpm. Up to a few years ago, the record speed generally used was 78 rpm, although 16 in. commercial transcriptions ran at 33-1/3 rpm to provide approximately 15 minutes of playing time. Although the conventional 78 rpm records are still being manufactured the recently developed fine groove records, which are in popular use now, run at a lower speed of 33-1/3 rpm, or 45 rpm for the 7 in. records. These 7 in. records have a center hole diameter of 1½ inches compared to approximately 0.286 in. for all other records. By using a much larger hole size, the 7 in. fine groove records have the advantage of greater stability on the center spindle of the changer.

Fine Groove Records. - These have more grooves per inch, and run at a lower speed, either 33-1/3 or 45 rpm, providing more playing time in a given record size. The way this works out for the different records can be seen in Table A, where the playing time is listed for each type. These values are for only one side of the record;

the available playing time is doubled, of course, by using both sides. It can be seen from the table that the fine groove records provide either more playing time, or the same time on a smaller record.

TABLE A

Record	*Speed*	*Grooves per inch Approx.*	*Playing time Approx.*
12 in. conventional	78 rpm	100	5½ min.
12 in. fine groove	33-1/3 rpm	225	22 min.
10 in. conventional	78 rpm	100	3½ min.
10 in. fine groove	33-1/3 rpm	225	15 min.
7 in. fine groove	33-1/3 rpm	225	5 min.
7 in. fine groove	45 rpm	225	5 min.

The playing time may, of course, vary according to the type of selection.

With more grooves per inch, it naturally follows that the width of each groove is much less in fine groove records than in the conventional type. Also the amount of deviation in the lateral cut of the records must be less than for conventional records. As a result, it is necessary to use a very thin stylus point and a lightweight pickup arm. The tip radius of the needle is approximately 0.001 in. compared to 0.003 in. for ordinary records, and the downward force of the pickup arm is about 6 grams. (A gram is roughly 1/30th of an ounce.) When the record changer plays both fine groove and conventional records, two needles must be provided, or the cartridge in the pickup arm may be changed, besides changing the turntable speed. The cartridge employed is generally either a crystal or a variable reluctance type, usually with a long-life sapphire stylus point.

Fine groove records are made of Vinylite plastic, which is superior to the shellac composition coating generally used for conventional records. The advantages of a Vinylite record are that it is unbreakable in normal use, and produces much less surface noise than shellac records. Of course, 78 rpm records can be, and are, made of Vinylite also, but all fine groove records are Vinylite because of the need for reduced surface noise with this type.

Frequency Response. – In order to have high fidelity, the record should reproduce the wide range of audio frequencies up to 15,000 cycles per second. However, the frequency response is limited by the fact that the highest frequency it is possible to record depends upon the velocity of the record groove as it moves past the needle, and how fast the needle can deviate in the lateral direction in the grooves. Naturally, the greater the speed for both of these effects, the higher the audio frequency variation that can be recorded.

Let us examine briefly why the groove velocity affects the frequency response of the record. It must be realized, first of all, that with the record turning at a constant number of revolutions per minute, the linear velocity of a point in a groove varies from maximum at the outside of the record, where the diameter is maximum, to a minimum at the inside playing diameter. This must be so because the groove at the outside travels a considerably greater distance past the needle in one revolution than an inner groove does in this same amount of time. For example, in the case of 12 in. record the maximum groove diameter at the outside of the record is 11½ inches and the distance around the groove (its circumference) is about 36 inches. Taking the minimum recording diameter as 5 inches, the length for this minimum inside groove is only about 16 inches. The velocity at which the outer groove moves past the needle is about 20 inches per second, for a record speed of 33-1/3 rpm, but the velocity of the inner groove is only about 9 in. per second, or less than one half.

Now let's look at Fig. 15-2. Here we illustrate an audio frequency tone as it would be re-

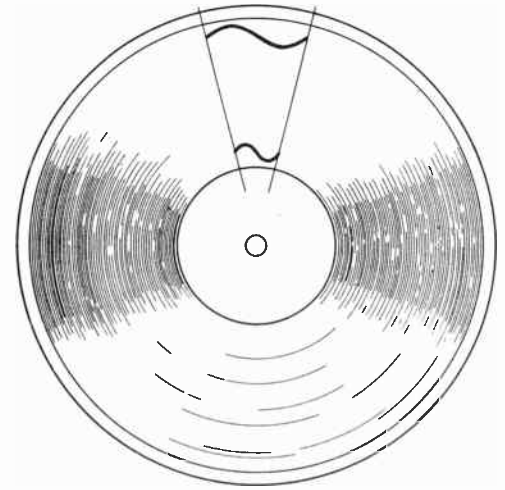

Fig. 15-2

corded in the outer groove of the record, and the same tone recorded in the innermost groove. Due to its lower velocity, the wave in the inner groove appears to be compressed relative to the outer groove's wave. This compression makes it very difficult for the needle to follow the sharp angles of lateral deviation in the groove. This limits the highest frequency that can be reproduced, therefore, because the higher the frequency the sharper the groove angles. On account of this compression effect a certain proportion of the record must be left blank at the center. The diameter of the portion left blank is a function of the record speed, and is 4 inches for 78 rpm conventional records, and approximately 5 inches for 45 or 33-1/3 rpm fine groove records.

Starting and Tripping Grooves. – Modern records have special characteristics which permit them to be used in automatic record changer operation. As shown in Fig. 15-3, special grooves are provided at the outside and inside of the record, not including the playing area. The groove at the outside edge is called a "starting" or "run-in" groove, spiralling over a radial distance of about ¼ in. Its purpose is to feed the pickup needle into the playing grooves after the pickup arm has landed on the outside edge of the record. This makes the landing position less critical and permits the changer to work properly with different records.

The tripping grooves near the label on the inside bring the pickup arm in toward the center of the record. This is usually an eccentric path that makes the arm accelerate and also move backward for an instant, as it travels inward to the center spindle. The purpose of these grooves is to give the pickup arm the motion required to trip

Fig. 15-3

the changer and start the changer cycle, after the record play has been completed.

Record Troubles. – It is important to realize that in many cases a record changer will not work right because of the records, rather than any trouble with the changer itself. For example, warped records can cause jamming of the mechanism in changers where the records are selected by knife blades slicing the record stack at the outer edge. *Warped records should not be used on an automatic changer.* They can often be straightened by placing them on a flat surface with a weight on top. With shellac records, though, you have to be careful about cracking them.

Some of the older 78 Rpm records do not have lead-in and tripping grooves and therefore must be played manually.

Some records may be too thin or too thick; their edges may be chipped; or the center hole may be enlarged. In such cases, the changer may jam, select two records, or not allow any to fall.

Records with chipped outer edges are usually troublesome on the slicer-type changers; a chipped center hole generally causes trouble in changers that depend on the center spindle for operation. Such records will have to be played singly, by manual operation.

Phono Pickup Cartridge. – There are two general types of reproducing cartridges used in the pickup arms of record changers. These are: (1) crystal, and (2) variable reluctance.

Crystal Pickup. – This is easily the most popular type. Its great popularity is due to the high output voltage as compared with other types, its low cost, and the simplicity of the required audio amplifier. The crystal cartridge is made from two pieces of Rochelle salt crystal, which are generally encased in an aluminum housing. The pickup needle is mechanically coupled to the crystal element so that vibrations of the needle will cause a distortion of the element. This in turn causes voltages to be developed by the crystal, which correspond to the variations of speech or music in the record.

A cross section of a crystal cartridge looks like this:

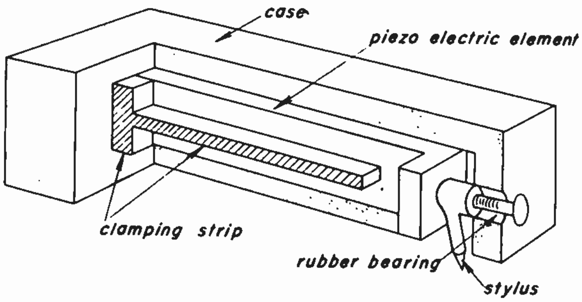

Fig. 15-4

There are different types of crystal cartridges. They may differ in the required needle force, in frequency response, or in mechanical dimensions. It is generally required that an exact replacement be made if the proper response is to be obtained for a particular installation. For example, the crystal cartridge used in the 45 rpm changer requires a pickup force of only about 1/5 of an ounce, while other crystal cartridges may require as much as two ounces of force upon the needle. The output voltages from crystal cartridges may vary from about .5 volt to 2 volts or so. Thus, you can see it is important to obtain correct replacements should this become necessary.

Incidentally, here is a simple trick you can sometimes use to determine if a crystal is no longer operating properly. With the pickup amplifier turned up rather high, rub your finger along the tip of the needle and listen for a rumbling noise. If you get this, you will at least know that the amplifier is working to some extent. Now, with the tip of your nail flick the needle *sideways* first in one direction and then the other. Compare the intensities of the clicks in both directions. If one click is much louder than the other it is a pretty safe bet that the crystal is defective and should be replaced.

Caution: Rochelle salt crystals are not capable of withstanding high operating temperatures. Changers incorporating such crystals should be kept clear of all sources of heat.

Variable Reluctance Pickup. – The variable reluctance phono pickup is a fairly recent development, which is becoming quite popular. It is a "magnetic" type of pickup, with the advantages of low needle force (3/4 to 1-1/4 ounce), excellent frequency response, and freedom from changes in its operation due to variations of temperature and humidity.

In this pickup, the needle, or a metal vane attached to it, is positioned so that it influences a magnetic circuit. Vibrations of the needle cause changes in the strength of a magnetic field. This in turn produces voltage variations, which are induced into a small coil and fed to an amplifier. The output voltage is extremely low compared to a crystal pickup, and is in the order of one ten-thousandth of a volt. Because of this, a special pre-amplifier is required to increase the level of the output to a degree sufficient to operate a conventional audio amplifier. The preamplifier generally includes tone compensation circuits which are required with this pickup.

CHANGER MECHANISMS

There are several types of changers in common use. Based on their function, these can be classified as: three-speed changers to play 78, 33 1-3 and 45 Rpm records, two-speed changers for 78 and 33 1-3 rpm records, single speed 78 rpm and 45 rpm changers. However, all of these can be considered in a more fundamental way by classifying them according to the type of mechanism used for automatically changing records. The three main characteristics are:

1. The method by which unplayed records are supported.
2. The method of tripping the changer mechanism at the end of the record
3. The method of selecting the next record to be played.

Methods of Record Support. – Most modern changers that are used in home receivers utilize what is known as the *drop sequence* method of changing records. In the drop sequence method, the unplayed stack of records is supported directly above the turntable. After the finish of each played record, and in the proper portion of the change cycle, the bottom record is dropped to the turntable to be played. The remainder of the unplayed stack remains supported above the turntable, to be dropped one at a time with each change cycle. In most changers, the next record may be dropped before the completion of the playing record by operating a *reject knob* or button.

The unplayed stack of records may be supported by one of two general methods. We may classify these as: (1) spindle support, and (2) post support. In the case of *spindle support*, most, or all, of the weight of the unplayed stack is supported by the center spindle. The spindle may be either stationary or rotating. In some changers utilizing spindle support, there may be one or more outside posts to help balance the stack and to push the bottom record off the spindle onto the turntable. One example of a spindle support changer is the 45 rpm record changer, shown in Fig. 15-14(a), which we will discuss in detail later on. In this changer there are no outside posts, all records being supported on a 1½ in. center rotating spindle, which contains the changing mechanism. Another example of spindle support is to be found in the Garrard RC 65 changers, which is used in some receivers. In this changer, the main weight of the records is supported on a notch in a bent spindle, thus:

Fig. 15-5

A spring-loaded *overarm* is used to position the records at the correct angle, so that the edge of the bottom record rests on the record separator shelf. A disadvantage of the notched-spindle type of record support is the chipping of the record center hole, which occurs when the bottom record of the unplayed stack is pushed off the notch to fall onto the turntable.

Post Support. – In a *post support* changer, *all* of the weight of the unplayed stack of records is supported by two or more outer posts (not including the spindle). The spindle proper may rotate, or it may be stationary. In the changer shown below, the spindle rotates with the turntable. In order not to cause shifting of the unplayed stack while the spindle is rotating, and also to assist in record separation, the upper section of the spindle is made very thin, as shown here:

Fig. 15-6

In this photo, you can also see the two opposing outer posts upon which the unplayed stack is supported. These posts also contain the mechanism (usually knife blades) with which the next record to be played is selected and dropped from the stack. Post support has the advantage of not chipping the center hole of the record, but it may cause chipping of its outer edges, which is not as serious. Some changers may use three posts instead of two to support the unplayed stack. An advantage of the three-post over the two-post changer is that the record is more likely to fall flat upon the turntable when released, and thus may actually hit the turntable at a lower velocity, due to the air cushion formed between the falling record and the turntable. If the record does not drop flat, this will permit the record to fall faster and hit the turntable harder than when it falls perfectly flat. However, having three posts instead of two, complicates the changer mechanism and adds to its cost.

Methods of Tripping the Changer. – After the end of the playing record has been reached, it is necessary that some sort of tripping mechanism be energized in order to initiate the change cycle and thus cause the next record in line to be played. In general, there are three types of tripping devices used in record changers. These may be classified as follows:

1. Position tripping.
2. Eccentric, or ratchet tripping
3. Velocity tripping

Position tripping is very commonly used and is perhaps the simplest method of all three. In this system, tripping will occur only after the pickup needle has reached a predetermined position on the record. At this position, the pickup arm engages a lever which initiates the change cycle. The tripping point depends upon the type of records played. For conventional types, it is usually about 1-7/8 inches from the spindle. However, in the case of the 45 rpm changer, which uses position tripping, the tripping point will usually be about 1-3/8 inches from the edge of the spindle. Some form of adjustment is usually provided to change the tripping point (within limits) to adapt the changer to slight variations in records and also to slight variations in the operation of the changer mechanism. This type of tripping has the advantage of simplicity of parts and operation, but the disadvantage of not being able to adapt itself automatically to variations of stopping groove diameters, or non-standard records. This disadvantage does not apply in the case of 45 rpm records, which are all standard dimensions and therefore readily adaptable to a position tripping changer.

Another method of tripping which is widely used is *eccentric* or *ratchet and pawl tripping.* A simplified sketch of a ratchet and pawl assembly is shown in Fig. 15-7.

The spring-mounted pawl is coupled to the pickup arm. As long as the pickup arm is moving inward toward the center of the record during normal playing, the spring loaded pawl simply

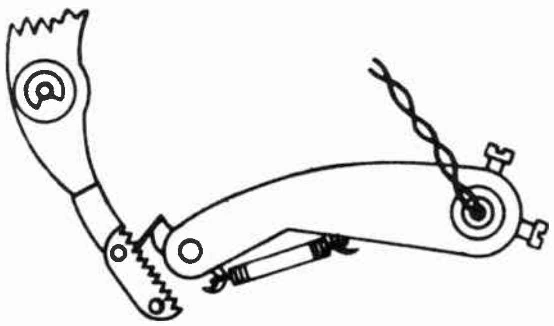

Fig. 15-7

slides over the teeth of the ratchet. When the needle enters the eccentric stopping groove at the end of the record, the pickup arm is caused to move *backward* during part of the record rotation. Any *backward* motion causes the sharp edged pawl to engage the ratchet teeth, move the ratchet, and thereby trip the changer mechanism. This type of trip automatically adjusts itself to variations of record characteristics provided that they all have an eccentric stopping groove. A possible disadvantage of eccentric tripping is that premature tripping may occur due to a record with an enlarged or off-center hole. A rapid clicking sound is normally heard during tripping and this has sometimes brought complaints from customers. A combination of both position and eccentric tripping is sometimes used.

A third type of trip is the so-called *velocity trip*. This type of trip operates if the forward velocity (toward the spindle) of the pickup arm exceeds about 1/8 inch in 1/2 revolution of the turntable. During the normal playing of the record, the forward velocity is considerably less than this amount, but when the needle enters the eccentric stopping groove, the forward velocity is considerably greater than normal and tripping occurs. In velocity trip, the possibility exists than an off center or enlarged hole in a record could also cause premature tripping.

Methods of Record Selection. – Here we can divide our topic into two general classifications as follows:

1. Spindle selection
2. Post selection

In spindle selection, the device which *selects* the next record to be dropped and played is on the spindle. One common type is the centerpost *step selector*. A sketch of this, showing the proper seating of a record, is given here:

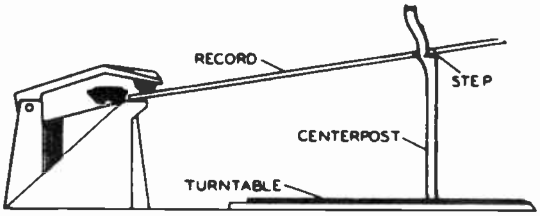

Fig. 15-8

The step is made just high enough to accomodate only one record at a time. A pusher arm at the left edge of the record pushes it to the right until it clears the step and drops down to the turntable. The pusher arm plays no part in the actual *selection* of the record but merely causes it to leave the step.

Since records may vary in thickness, the step height must represent a compromise, so that a record which is thicker than normal will not jam, and a record which is thinner than normal will not permit a second record to fit into the step. Thus, the step height is somewhat greater than the thickness of one record, but smaller than two thin records. As we mentioned before, the center hole of the records may be chipped when pushed over the sharp edge of the step, because the entire weight of the unplayed stack is resting upon the record that is leaving the step.

The 45 rpm changer also uses spindle selection. The method of selection is somewhat different from that just described, however, and has the very important advantage that no chipping of the center holes can occur. The unplayed stack is normally supported by two projecting separator shelves as shown in Fig. 15-9.

Note the air space between records due to the depressed playing surface. When the bottom record is ready to be dropped, a pair of knives comes out into this air space, and the separator shelves retract into the spindle. This permits the bottom record to drop onto the turntable while the rest of the stack remains supported temporarily by the two knives. After the cycle is completed, the knives retract and the stack comes to rest on the separator shelves, which again protrude.

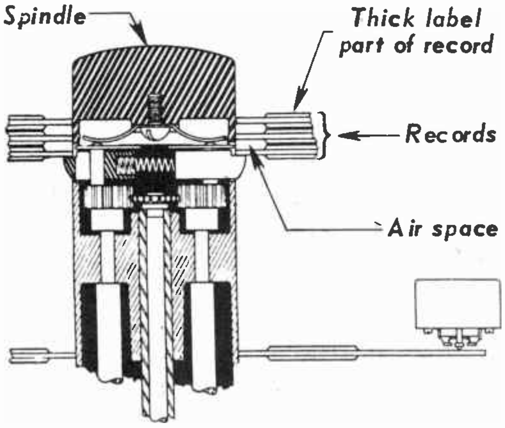

Fig. 15-9

Post Selection. – This is invariably accomplished by knife blades located near the top of the posts. The unplayed stack of records is normally supported by a pair of shelves. Knives are located just above the shelves. They are loosely mounted, and project at an angle, thus:

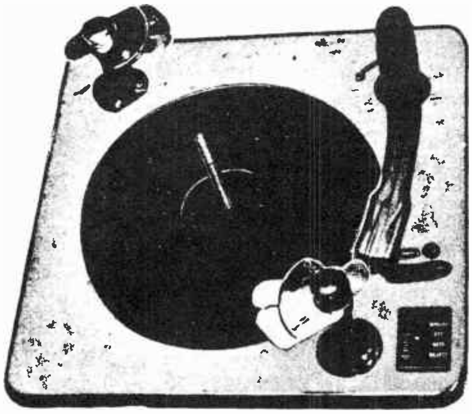

Fig. 15-10

During the change cycle, the posts rotate, so that the knives pass between the bottom record and the one just above it. As the post continues to rotate, the shelves move out of the way of the bottom record, permitting it to drop onto the turntable. In the meantime, the unplayed stack is supported by the knives. As the cycle nears completion, the posts return to their original positions, and the unplayed stack drops back onto the shelves. Records may vary in thickness, and to allow for this, the knife blades are mounted loosely. They are so positioned as to rise when contacting the bottom record and pass above it. It is important that the knives be properly adjusted, in order to prevent chipping of the edges of the records or jamming of the mechanism.

Motors and Turntable Drive Mechanism. – Most record changer drive motors are of the single-phase, shaded-pole type of induction motors (these are not *synchronous* motors). This motor has several features which make its use desirable. It reaches full running speed in a short time, and may withstand long periods of stalled operation without serious overheating in the event of jamming of the mechanism. Motor speeds vary between about 1200 to 3600 rpm. Proper turntable speed is obtained by a step down arrangement, which usually consists of a *friction type reduction system* (rubber-tired wheels) of which the turntable rim is often a part. Changer motors usually have a power rating of from 1/200 to 1/500 horsepower. They generally do not have any speed adjustment, and if the turntable runs a few rpm slow or fast there is usually nothing much that can be done about it. Of course, abnormal friction or binding may cause the motor to run slow and this can be cured. Changer drive motors are usually held in a "floating" rubber mounting to prevent the transmission of motor vibration to the turntable and hence to the pickup. It is important that any mounting screws projecting through rubber cushions are not tightened enough to compress the rubber, since this will reduce the vibration-isolating properties of the rubber.

Many changers transmit their power to the turntable by a *rim-drive* arrangement. An example of this, is shown in Fig. 15-11.

Here we may see that the motor spindle engages a rubber-tired idler wheel, with a considerable speed reduction due to the small diameter spindle and the large diameter idler wheel. The idler wheel is held by spring tension against the inside of the turntable rim, which it drives with a further speed reduction. Any irregularity of idler wheel diameter, due to wearing of the rubber tire, will result in a "WOW". This can only be cured by replacing the idler wheel tire.

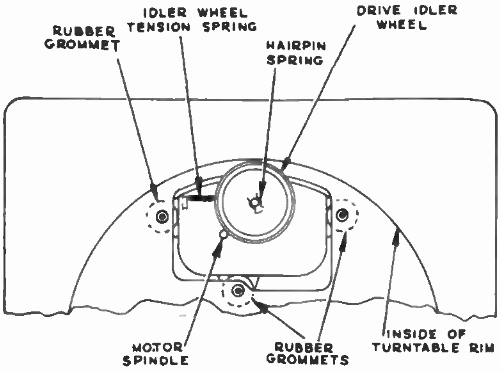

Fig. 15-11

A variation of this system is used with the RP-176 changer, thus:

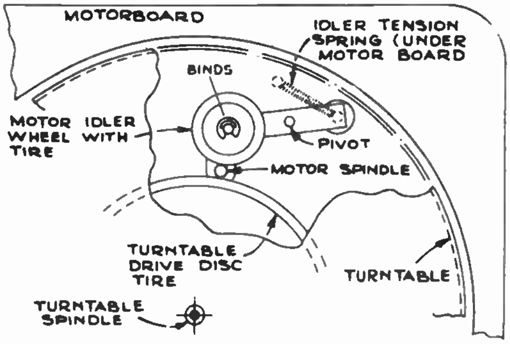

Fig. 15-12

Instead of utilizing the turntable rim, an inner diameter turntable drive disc rubber tire is contacted by the motor spindle. The motor spindle is held against the drive disc tire by the action of the motor idler wheel and spring.

Still another variation of rim drive is the system used with the 45 rpm changer as shown here in Fig. 15-13.

This consists of two concentric rubber tired wheels of different diameters mounted on the same shaft. As shown here in the drawing, the motor spindle contacts the large idler wheel, which also turns the small idler wheel. The small wheel contacts the inside of the turntable rim and causes it to rotate. The idler spring holds the wheels against their respective surfaces to provide sufficient friction and prevent slippage.

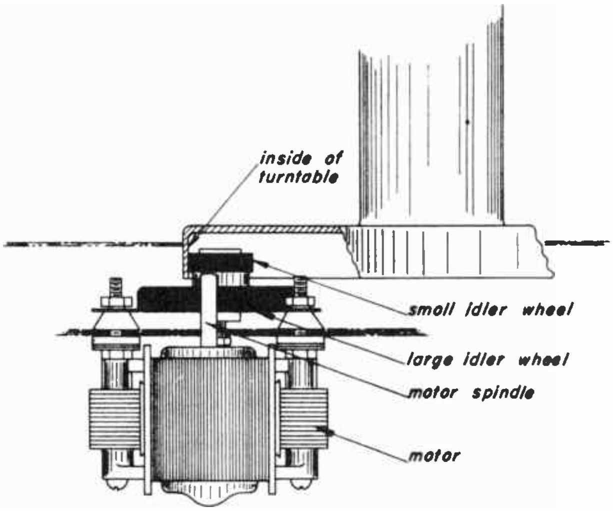

Fig. 15-13

RECORD CHANGER (45 Rpm)

15-3. This is a recently developed changer, designed specifically to operate in conjunction with the new 45 rpm fine groove records. This changer is unusual in that the mechanism for selecting

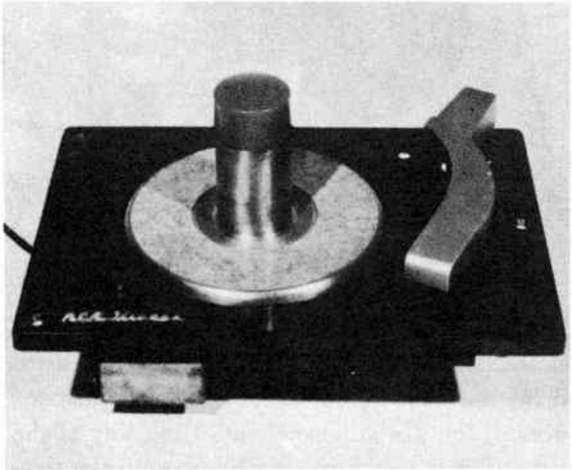

Fig. 15-14 (a)

records and for supporting the unplayed stack is *contained within the 1½ inch spindle.* It has an an extremely fast change cycle, and takes about 3 or 4 seconds from the end of the playing grooves of one record to the start of the playing grooves of the next record. The change cycle itself takes only about 1½ seconds.

The changer can accomodate a series of ten 7 inch fine groove records.

A speed of 45 rpm was chosen, because for the 7-inch record size selected, it was determined mathematically that 45 rpm was the slowest speed that would provide the desired high fidelity reproduction.

Unpacking Information. – One of the television receivers using the 45 rpm changer is RCA Model S1000. The unpacking information as it applies to this changer (RP168C) is given with respect to the S1000. For other receivers the procedure is very similar or identical. Seen from the rear, the S1000 looks like this:

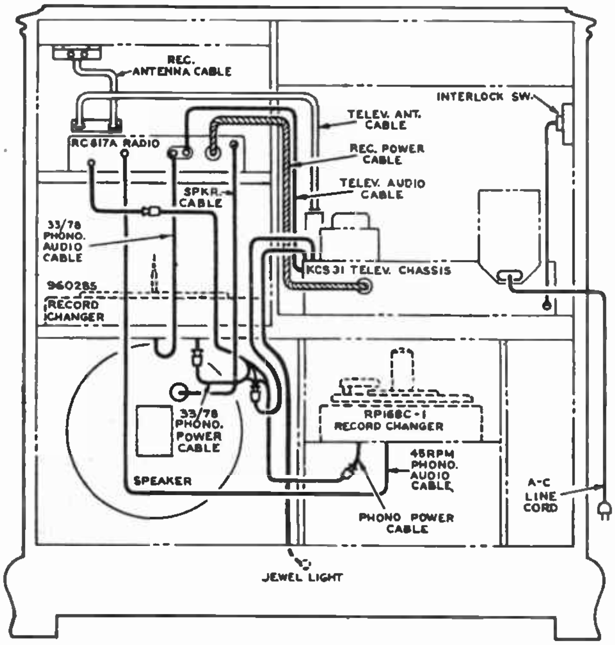

Fig. 15-14 (b)

Note the location of the record changer in the lower-right portion of the sketch. The record changer drawer is held by a single wood screw for shipping. From the rear of the cabinet, remove this screw, and slide the drawer all the way out. From the top of the changer, remove the three *filler plugs* from over the *motorboard mounting screws.* Loosen all three mounting screws just enough so you can remove the two wooden *shipping strips* under the edge of the motorboard. Retighten the three motorboard mounting screws just enough to prevent the motorboard springs from rattling and *replace the three filler plugs.* The changer is now ready for operation. The unpacking procedure for other changers is similar and will not be given in detail. Consult your Service Data notes for individual cases.

Customer Instruction. – The following information with regard to loading and operating the changer, and the necessary precautions, should be explained to the customer.

To load, take a stack of not more than 10 records. Place the stack over the center post and permit it to rest on the shelves. Apply power and push the *start-reject button* to start, and then release it. The changer will now automatically play the "up" side of all ten records. The last record will be repeated until the changer is shut off. Any record may be rejected during playing by pushing the *start-reject* button again. At the conclusion of playing a stack, *wait until the cycling is completed* and the last record is being repeated; then lift the pickup arm and place on its rest. Shut off power.

Do not fail to aquaint the customer with the operation of the *function switch.* This switch is found to the right of the radio push buttons and is the *outer* member of the dual knob found there. The inner knob is used for radio tuning. There are two changers in the S1000 receiver. To operate the 45 rpm changer, turn the function switch to "*XPh*". The other changer operates with the function swirch in position marked "*Ph*".

Operating Precautions. – The following precautions should be observed when operating the 45 rpm changer. Be sure to explain these to the customer.

1. Do not handle the pickup arm while the changer is in cycle. To do so may damage some of the component parts.

2. Records may only be removed from the turntable when the changer is *out* of cycle. Otherwise, the separator knives will be partially or fully extended, preventing normal removal of the records.
3. When the changer is out of cycle, the separator knives should be fully retractèd into the spindle. If the knives protrude, out of cycle, the following procedure should be followed. Turn the power on and wait until the changer is out of cycle. As the turntable is rotating, press your fingers gently against the protruding knives until they are fully retracted. This applies only to changers having rotary knives. Changers using spade tips will not remain out.
4. If the changer jams, do *not* use force to release it. If necessary, loosen or remove whatever parts are needed to release the jam. If the customer cannot release the jam, instruct him to call for service.
5. Always keep the motor drive spindle and the rubber tire on the idler wheel free from oil, grease or dirt. These parts may be cleaned with carbon tetrachloride or naphtha.

THE CHANGE CYCLE

15-4. In order to understand the function of the various parts in a record changer, we shall follow through a complete change cycle of the RCA Model RP 168, as an example of a relatively simple changer. Let us assume that a record has just finished playing. The needle leaves the last playing groove and begins to move toward the spindle in a lead-out spiral groove. (There is no eccentric groove on the 45 rpm 7 inch record.) When the sapphire needle reaches a point 1-3/8 inches from the side of the centerpost, tripping should occur. This changer uses position tripping, and if tripping does not occur at this point, an adjustment may be made which we will describe later.

Tripping. – A trip lever assembly is clamped to the end of the pickup arm pivot shaft. It looks like this:

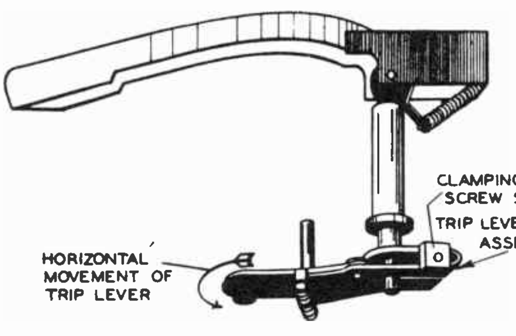

Fig. 15-15

The trip lever assembly is clamped rigidly to the pivot shaft. This assembly is made of two basic parts, a fixed section which is attached solidly to the pivot shaft, and a spring loaded pivot arm which does the actual tripping. Another view of the trip lever assembly showing these two sections is shown here.

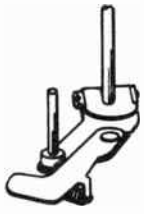

Fig. 15-16

When the end of the record is reached the trip lever assembly has moved in enough so that the spring loaded pivot arm touches and begins to move the trip pawl, thus:

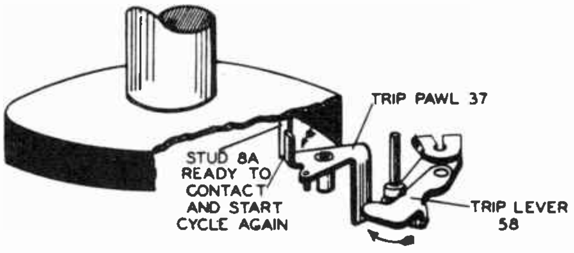

Fig. 15-17

The trip pawl is mounted very loosely and requires an extremely small amount of pressure to move it. When the trip pawl has moved sufficiently, it is pushed in the path of a stud fastened to the underside of the turntable. The manner in which the turntable stud contacts the trip pawl can also be seen in Fig. 15-17. The turntable stud now takes over the job of supplying the motive force for initiating the tripping. No force is required from the pickup arm for this function. As the turntable stud presses against the trip pawl, the trip pawl pivots, and in so doing, a stud on the trip pawl applies force to the director lever (41). This is shown in Fig. 15-18

A stud (41b) on the director lever is caused to

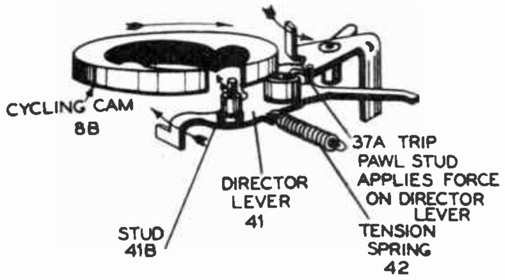

Fig. 15-18

move into the opening of the cycling cam (8b). and the cycling cam now provides the motive power for the remainder of the operations. The cycling cam is fixed to the underside of the turntable, thus:

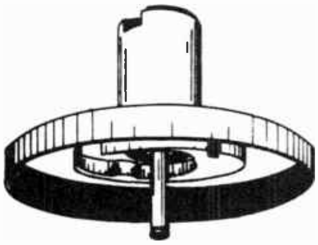

Fig. 15-19

The cycling cam contains a specially shaped groove in which the director lever stud (41b) now rides.

As the cam rotates, the director lever stud (41b) riding in the cam groove causes a further movement of the director lever. Several actions take place due to this.

Muting. – The vertical end (41c) of the director lever, which extends below the motor board, moves away from the muting switch (63). This permits the muting switch contacts to close, shorting out the pickup leads and silencing the amplifier during the change cycle. This may be seen in Fig. 15-20.

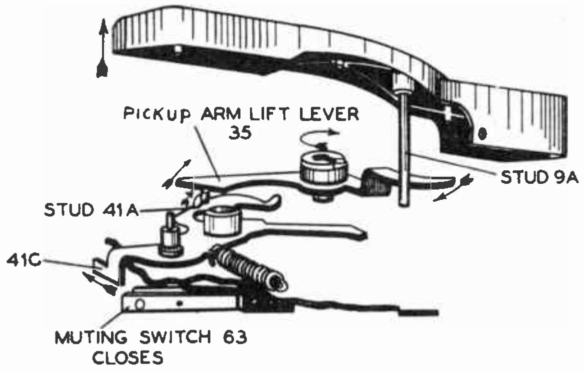

Fig. 15-20

Lifting the Pickup Arm. – At the same time, a stud (41a) on the direct lever presses against the pickup arm lift lever (35). The other end of the pickup arm lift lever presses against the pickup arm lift pin (stud 9a) and raises the pickup arm clear of the records. As the turntable continues to rotate, one end (41e) of the director lever presses against stud (58a) on the trip lever and starts the pickup arm moving outward. This same stud (58a) as it moves forward, contacts the pickup arm return lever (50) by entering the clamping latch (50a), thus:

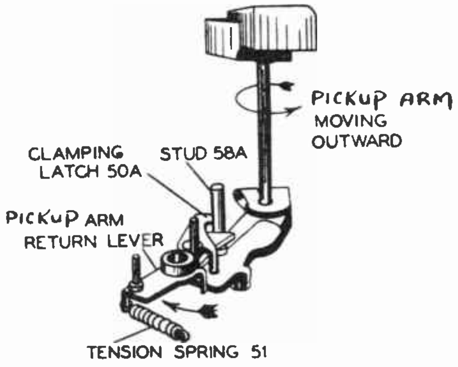

Fig. 15-21

The stud (58a) moves the pickup arm return lever outward against the tension of spring 51. When the pickup arm reaches its outermost position, it is held there momentarily, while the new record drops, by the action of the clamping latch (50a) and the shape of the cycling cam.

Record Selection. – Now, let's go back just a bit to examine the mechanism that determines the selecting and dropping of the record. In order to do this, it will be necessary to examine in some detail the construction of the center spindle. In the upper section of the centerpost are located two sets of opposed separator knives and record support shelves. These are mounted on an eccentric which may be turned by a small gear. A breakdown of one such assembly is shown here:

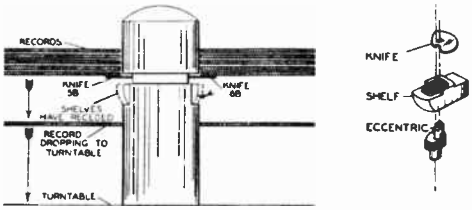

Fig. 15-22

The gear is not eccentric (as it appears in the drawing), but is perfectly round. The eccentric runs through a hole in the shelf and is riveted to the knife so that the eccentric and knife are rigidly mounted together. The shelf, however, is rather loosely fitted, and is free to move quite a bit around the eccentric. The assembly of the shelves and knives and associated parts is like this:

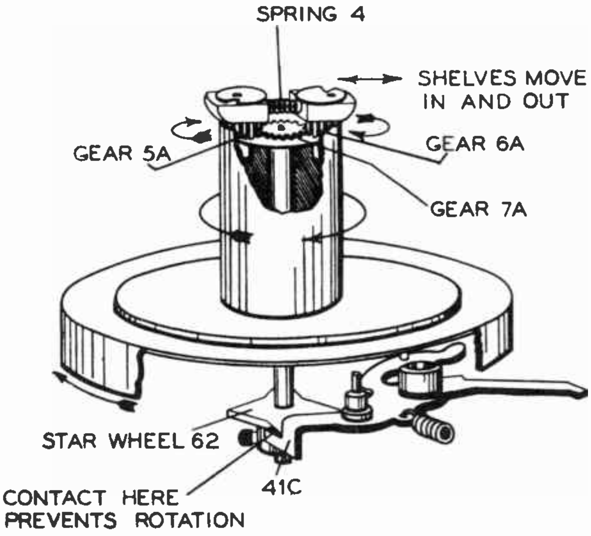

Fig. 15-23

Note that the two shelves are always pressed toward the outer position due to the action of the spring (4). A center gear (7a) meshes with the two outer gears (5a, 6a). This center gear (7a) is rivited to a solid shaft which runs down through the center of the spindle and terminates below the turntable. At the bottom of this shaft a star wheel (62) is fastened. This can also be seen in Fig. 15-23.

Now that we have examined the major components let us see how the records are handled. During normal playing of a record, the bottom record of the unplayed stack rests upon the two shelves, thus:

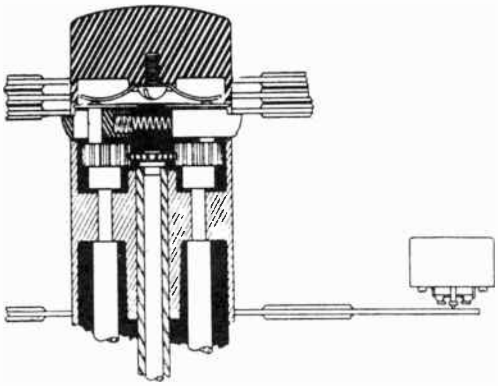

Fig. 15-24 a

Note the spaces between records, due to their special construction. The knives at this point are completely retracted. Another view will help you visualize the relative positions of the knives and shelves.

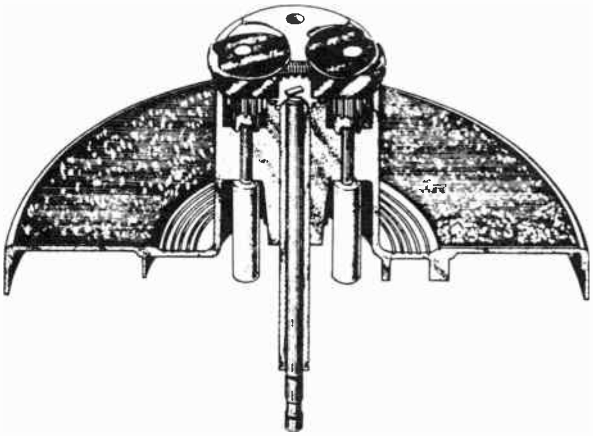

Fig. 15-24 b

While a record is normally playing, the star wheel (62) and the shaft and gear (7a) to which it is attached rotate freely with the turntable and no action takes place inside the centerpost.

Now, let's say that the changer has finished playing a record and has been tripped. The pickup arm is moving out toward the edge of the record and the director lever is moving in, so that one end of it (41c) contacts the star wheel (62) and stops it from rotating with the turntable. This may be seen in Fig. 15-23. The turntable continues to rotate *around* the center gear (7a). This forces gears (5a) and (6a) to rotate and thus to turn the two eccentrics. As the eccentrics turn, the two knives extend out into the *space* between the two bottom records. As the eccentrics turn further, the two shelves are forced to retract into the spindle against the compression of the spring (4). When the shelves have retracted fully into the spindle the bottom record drops. The remainder of the stack remains supported by the two knives. The position of the knives and shelves as just described can be seen in these two views:

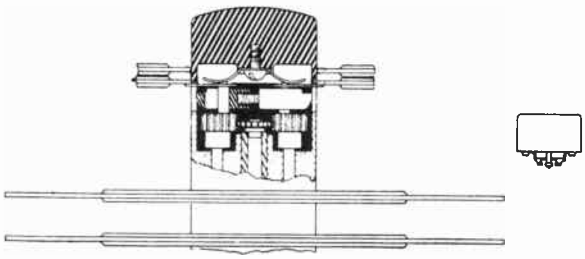

Fig. 15-25a

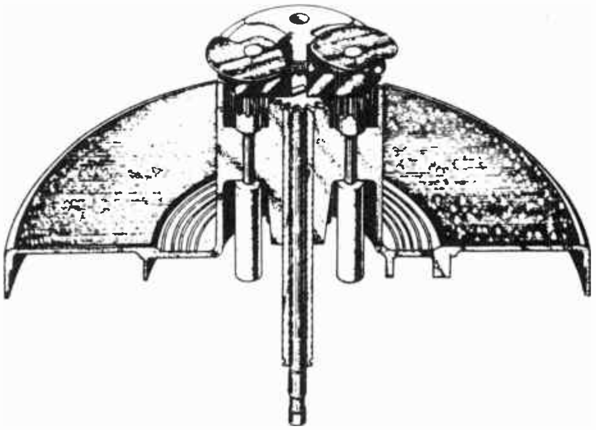

Fig. 15-25b

As the turntable continues to rotate, the knives again retract and the shelves are forced out by spring (4), catching and supporting the unplayed stack. After the shelves are fully extended, the director lever (41c) disengages from the star wheel (62) which once again is free to rotate with the turntable, immobilizing the spindle mechanism until the next tripping occurs. At the same time the muting switch is opened by contacting of the director lever (41c).

Pickup Arm Action. – A detailed description of the action of the pickup arm and associated components has purposely not been given with the preceeding discussion to avoid undue complication. We will now take this up. The start of this action is best illustrated in Fig. 15-18, which is repeated here for convenience.

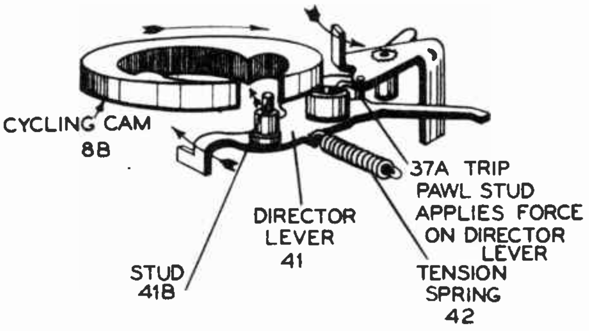

Duplicate of Fig. 15-18

After the changer has been tripped, a stud on the director lever (41b) is forced into the opening of the cycling cam. The action of the cycling cam carries stud (41b) further in toward the spindle for almost ½ revolution of the turntable. As this stud (41b) is moving toward the spindle, a stud (41a) (see Fig. 15-20) on the opposite end of the director lever is moving away from the spindle This stud (41a) now contacts one end of the pickup arm lift lever and presses against it, forcing the opposite end to move the pickup arm lift pin (stud 9a) so as to lift the pickup arm clear of the records. Further movement of the director lever in the same direction causes the end (41e) to contact and push against stud (58a) of the trip lever assembly. As the director lever moves this stud (58a), it moves the trip lever assembly away from the spindle and thus causes the pickup arm to move outward, as shown in Fig. 15-26.

When the pickup arm reaches its outermost

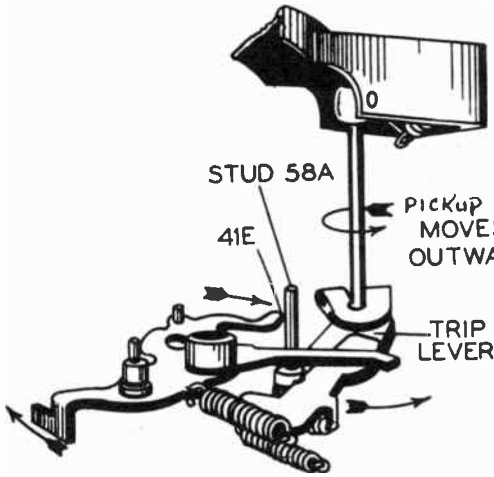

Fig. 15-26

position, it remains there momentarily due to a flat portion of the cycling cam, and during this time is locked in position by the action of the clamping latch (50a). The record drops during this period as previously described.

While the pickup arm return lever assembly (50) is being pushed outward, it does so against the tension of a spring (51) as shown in Fig. 15-21. As the turntable continues to rotate and we go off the flat portion of the cam, pressure begins to be taken off the trip lever and the pickup arm lever spring (51) begins to return the trip lever and the tone arm inward toward the edge of the record. The cycling cam permits this movement by slowly withdrawing end (41e) of the director lever. Thus under the force of spring (51) the pickup arm begins to move in toward the edge of the record. It continues to move in, until a stud (50b) on the pickup arm return lever contacts an eccentric stud (45c) mounted on the motor board. This eccentric is adjustable and determines the landing point of the pickup arm.

After the pickup arm reaches its landing position stud (41a) continues to back off along the pickup arm (see Fig. 15-20) permitting the pickup arm to be gently lowered onto the record. As the pickup reaches the record, stud (41b) on the director lever snaps out of the cycling cam. This causes the end (41c) of the director lever to open the muting switch and at the same time the other end of the director lever (41d) causes the clamping latch to open, like this:

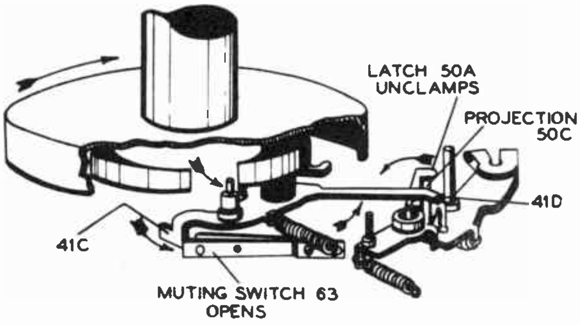

Fig. 15-27

This completes the mechanism of operation for one complete change cycle.

When it is desired to reject any record or to start the cycle in operation, the reject slide is pressed in by the reject button. This moves the trip pawl (37) into the tripping position and the change cycle proceeds as described before. This action is shown here:

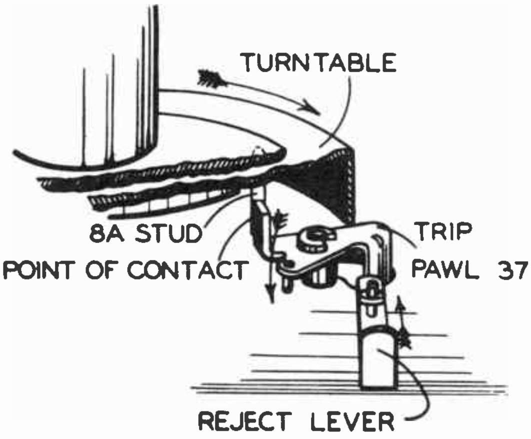

Fig. 15-28

MAKING ADJUSTMENTS

15-5. There are three adjustments which may be made on the changer to insure proper landing, tripping, and height of the pickup arm. However, the installation man will make only those adjustments that are accessible without removing the changer. These are the landing and pickup height adjustments.

The location of the landing and pickup arm height adjustments can be seen here:

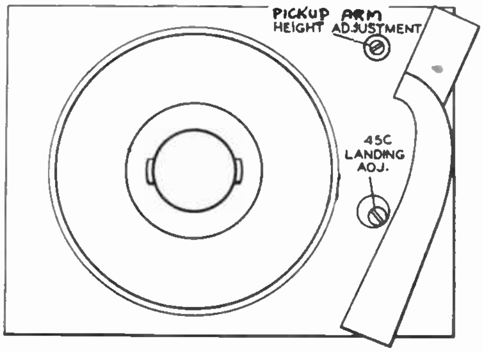

Fig. 15-29

Landing Adjustments. – In normal operation, the needle should land halfway between the edge of the record and the first playing groove. If it does not, a small correction can be made by turning the eccentric landing adjustment (45c). *Caution:* Do not attempt to correct a landing error of more than plus or minus 1/32 inch with the eccentric landing adjustment. To do so may throw other portions of the mechanism out of their correct cycling time. If proper landing cannot be obtained, the installation man should file a service call for the job. If the landing is off the correct point by more than 1/32 inch, it may be reset by the following procedure (but not normally done by the installation man).

1. Loosen the clamping screw (57) of the trip lever assembly enough so that the trip lever assembly can move on the pickup arm shaft. The location of this is shown here.

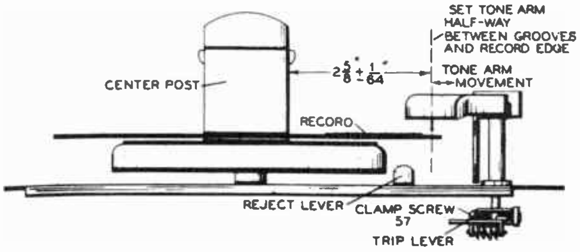

Fig. 15-30

2. Turn the eccentric landing adjustment stud (45c) to a setting about halfway between the inward and outward limits. The screwdriver slot should now be approximately 30 degrees from parallel with the first edge of the motor-board.
3. Place a record on the turntable. Push the reject button to put the changer in cycle, and rotate the turntable by hand until the sapphire needle has been lowered to a point level with the top of the record.
4. With the trip lever in this position, hold it rigidly by hand, and move the pickup arm so that the sapphire is in the position halfway between the first playing groove and the edge of the record. Check this by pushing the reject button and rotating the turntable by hand for one or two change cycles. Make correcting adjustments if necessary by further movements of the trip lever, until the sapphire lands correctly. As shown in Fig. 15-30, the correct sapphire landing position should be 2-5/8 inches, plus or minus 1/64 inch, from the side of the centerpost.
5. When the landing is correct, tighten the clamp screw (57).
6. Check the landing again. Minor corrections can be made with the eccentric landing adjustment stud (45c).

Pickup Arm Height Adjustment. – The Height of the pickup arm above the motor board must be checked when the changer is out of cycle. The correct out-of-cycle height is obtained when the sapphire point is about 1/16 inch above the motor board (not the turntable). This is shown here:

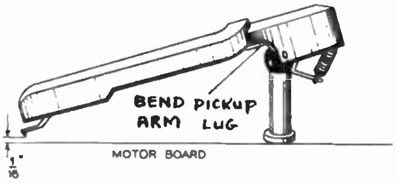

Fig. 15-31

If the height is not correct, bend the pickup arm lug until it is.

Now we must check the height of the pickup arm with the changer in cycle. This is done as follows. Push the reject button to set the changer

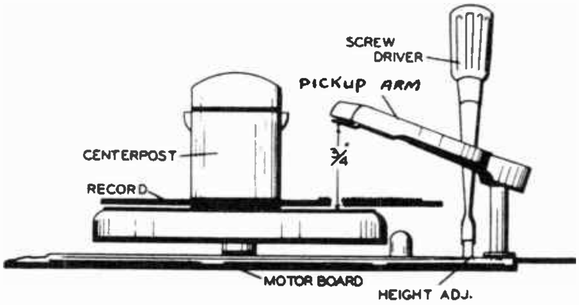

Fig. 15-32

in cycle. Rotate the turntable by hand until the pickup arm has reached its maximum height. Measure the distance from the point of the sapphire to the top of the turntable. This distance should be ¾ of an inch. If it is not, turn the height adjustment stud to attain the proper height. This can be seen in Fig. 15-32.

If it is desired to raise the pickup arm, turn the height adjustment stud clockwise. To lower the pickup arm, turn counter-clockwise.

Tripping Adjustment. – Tripping should normally occur when the sapphire is 1-3/8 inches from the side of the centerpost. If this is not the case, a tripping time adjustment may be made by bending the bottom lug of the trip pawl (37) as shown in Fig. 15-33.

If tripping occurs late, bend the bottom lug forward in the direction of the trip lever. If tripping occurs too soon, bend the bottom lug backward, away from the trip lever. Make these bending adjustments carefully and in small steps to avoid breaking off the lug. This adjustment is not normally made by the installation man but is included for the sake of completeness.

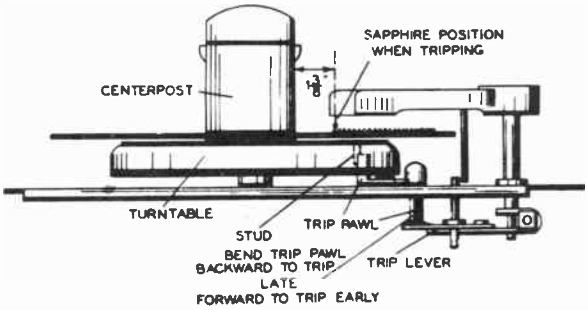

Fig. 15-33

CUSTOMER INSTRUCTION

Aspects of Customer Instruction. – Before we discuss the characteristics of the various record changers, which follow, let us look into the very important matter of instructing the customer in the correct operation of his changer. Specifically, we shall cover the following topics:

Fig. 15-34

1. Automatic Operation
2. Manual Operation
3. Operating Precautions

Some changers are very simple to operate. Others have special devices and are more difficult. It is up to you to show the customer how to operate his particular changer.

In our discussion we shall first list a number of points which apply in general to all changers. Then we'll discuss variations and additions as they apply to specific changers and finally we shall give a list of operating precautions which should be observed to prevent damage to the changer and records.

Automatic Operation. – In most spindle support changers a record stabilizing clamp will be found on the side post. (Two-post changers do not have one.) This must be lifted, and in some cases swung off to the side before attempting to load a stack of records. The stack should be prepared in advance of loading with the desired selections facing up and the first record to be played at the bottom of the stack. Before loading the records, the changer must be adjusted to receive the correct size. This is usually accomplished by rotating a side post, although for the changer shown in Fig. 15-35 the post supporter is lifted and slid backward or forward for 12 or 10 inch records. In the case of the record changer shown in Fig. 15-36 the procedure is a little different. Lift the record stabilizing clamp on the side record post with the edge of the stack resting on the 10 inch support. When a stack of 12 inch records is to be played, raise the 10 inch record support before placing the stack over the center post. The 12 inch records will rest on the main support. Changers which are designed to intermix do not require any such adjustment. In the case of two-speed changers, the correct turntable speed and needle size must also be set before loading records.

After the records are loaded onto the changer, replace the record stabilizing clamp (or arm) and see that the records are resting properly upon the supports. Turn the power switch to "On" and operate the "Reject" knob or button. The changer will now play automatically, the top side of each record of the stack. Some changers shut off automatically at the conclusion of the last record and some do not. To determine quickly which changers do and which don't, you can refer to the table at the end of this Lesson. In most changers, to reject any record being played, simply operate the "Reject" knob or button. This starts the change cycle immediately to play the next record.

The method of removing records from the turntable depends upon the type of changer. In most two post changers, you lift and turn the separator shelf and then lift the records straight up. In the case of most spindle support changers, you lift a stabilizing clamp or arm out of the way and then lift the records straight up. The procedure is a little different in the case of some changers like the Garrard RC 65 (see Fig. 15-38). Here, you simply raise the overarm and pull out the spindle. The records are then easily removed.

In changers which do not employ automatic shut off, you must wait until the *change cycle* is completed. Then place the pickup arm on the rest and turn off the power.

Manual Operation. – Some of the changers do not have provision for manual operation. In this group are the RCA RP 178, Garrard RC 65, Thorens CD 40 and others. Single records may be played on these changers by following the procedure used in automatic operation.

On record changer models that include manual operation, the normal procedure is as follows:

1. Make certain the mechanism is out of cycle and the pickup arm is on the rest.
2. Lift and turn selector arm as for unloading records.
3. Place record on the turntable.
4. Move control knob to "Manual" position.
5. Place the pickup at the start of the record.
6. At the end of the record, lift the pickup arm and place it on the rest position.

In many changers the power is automatically shut off when the pickup arm is in the rest position. For others, however, the control knob must be turned to the "off" position to remove the power.

Operating Precautions. – Many customers simply do not realize that there are certain things which should not be done in operating changers. It is up to you to point out these facts to the customer, to avoid needless damage to the changer, and resulting extra service calls. The following should be brought to the customer's attention.

1. *Never* use force in operating or handling any portion of the changer.
2. Keep the changer away from direct sources of heat, which may damage a crystal cartridge.
3. Do not play cracked or chipped records, which can damage the sapphire needle
4. Warped records may produce erratic operation.
5. Do not leave records on the changer when not playing. This may cause warping.
6. Do not handle the pickup arm when the changer is in cycle.
7. Do not attempt to change the record size adjustment while the changer is in cycle.
8. The customer should not lubricate the changer. This will be done by the service man.
9. In some changers, it may be inadvisable to attempt to move the pickup arm horizontally when in rest position unless the control knob is in the "Manual" position.
10. Do not leave the mechanism in cycle with the power off for an extended period of time.

When the customer has been properly instructed in the foregoing procedures and cautions, this will result in more satisfactory performance and fewer troubles and service calls. A few minutes spent at the time of installation may result in hours saved later.

78 RPM RECORD CHANGERS

15-7. The 78 rpm changers used in most receivers can be considered in two classes. The first type uses knife blades for record separation. As an example of this, the RCA Model RP 176 will be described here. The second type of record selection employs a pusher arm to push the bottom record off the center spindle. The RCA Model RP 178 and 960001 series, to be described below, are typical examples.

Model RP 176. – This changer which is shown in the photograph in Fig. 15-35 is a two post support changer, employing knife blades for record selection. It is designed to play automatically a series of twelve 10 inch or ten 12 inch records of the standard 78 rpm type. The two sizes may not be intermixed. The changer shuts off automatically after the last record has been played. Eccentric tripping is employed, and this operates in a manner previously described. A safety clutch is provided which prevents damage to the changer in case of a jam due to a defective record.

Fig. 15-35

Adjustments. – There are several adjustments which may be set to provide proper operation of the changer. These are listed as follows:

1. Landing adjustments for 10 and 12 inch records.
2. Pickup arm height adjustments.
3. Record shelf timing.
4. Record post spacing.
5. Segment-cam radial position.
6. General mechanism timing.

The installation man should check to see if these adjustments are correct.

The details of these adjustments are described in the service data manual for the Model RP 176 record changer, to which you can refer when necessary. If the pickup arm does not land correctly on 10 and 12 inch records there are separate adjustments that can be made. The pickup arm height adjustment can be made with the changer in cycle and out of cycle. If the records do not drop at the proper time, you will have to adjust the record shelf timing. Should the records strike the separator post while falling, or fail to stay on the record shelf, the spacing between the record posts will have to be adjusted. If the pickup arm continues to repeat playing of the top record, or if it jams when part way in, the segment cam requires adjustment. As a final possible trouble, if the changer has a tendency to jam, and is generally erratic in operation, the changer mechanism will require a timing adjustment.

Remember, though, that some of these troubles can be the fault of the records, if they are not in good condition with the required run-in and starting grooves.

Model RP 178. – This is a spindle support changer, utilizing a step on the spindle for record selection. A "pusher" side post pushes the bottom record off the step, as described in Section 15-2. A photograph of this changer is shown here:

Fig. 15-36

The changer will play automatically a series of twelve 10 inch or ten 12 inch standard records of the 78 rpm type. It will *not* intermix. Tripping is accomplished by the eccentric, ratchet and pawl system. A crystal pickup is utilized, employing a low noise, long-life, sapphire point needle. This changer does not shut off automatically after the last record.

Adjustments. – The following adjustments may be required to insure proper operation of the changer.

1. Pickup landing adjustment.
2. Pickup arm height adjustment.
3. Record push cam and gear assembly adjustment.

The installation man should check to see if these adjustments are correct.

If the pickup arm does not land properly, there is a set screw adjustment to correct this. Separate landing adjustments for 10 inch and 12 inch records are not required. As with the RP 176 record changer, the pickup arm height adjustment is made with the changer out of cycle, and then in cycle. If the changer will not complete the cycle, the record push cam and gear assembly adjustment may be required. How to make these adjustments is described in the Manufacturer's service manuals.

The 960001 Series. – This changer is a two post support type, utilizing knife blades for the selection of records. It is designed to play automatically a series of twelve 10 inch or ten 12 inch records of the standard 78 rpm type. It will not intermix. The pickup employes a light weight, low noise, crystal cartridge equipped with a sapphire point. A combination tripping system is used consisting of position and eccentric trip. One of these trips is set off first depending upon the record characteristics. This assures tripping on all types of records. A muting switch is provided which shorts out the pickup during the the change cycle. This prevents cycling noises from being heard. Models 960001-2, 960001-3 and 960001-4, have an additional muting switch which shorts out the pickup while the pickup arm is in the rest position, which is the only difference between these and Model 960001. A photo of this changer is shown in Fig. 15-37.

Adjustments. – The following adjustments may be required for correct operation of this changer.

1. Pickup landing adjustment.
2. Tone arm height adjustment.
3. Tripping adjustment.
4. Pickup pressure adjustment.

As before, the installation man should check to see if these adjustments are correct.

If the pickup arm does not land properly this is

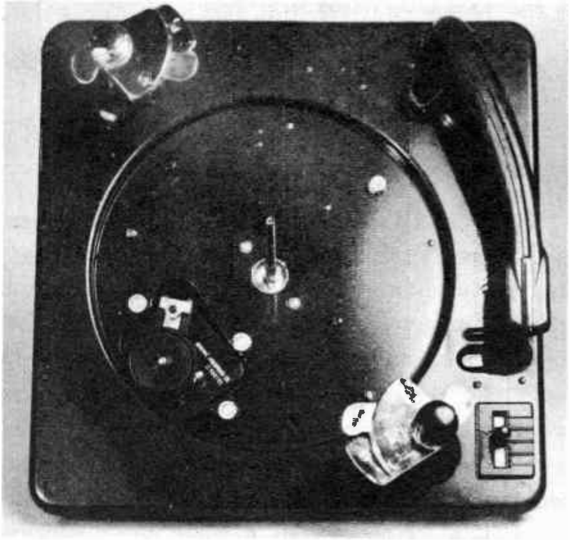

Fig. 15-37

adjusted for a 10 inch record; the landing for 12 inch records is automatically adjusted when the 10 inch landing is correct. The pickup arm height adjustment must be made with the changer in cycle and out of cycle. Although two tripping systems are employed, the eccentric trip is automatically set when the position trip is adjusted properly. This should be set to operate when the sapphire is approximately 1-5/8 inches from the outer edge of the spindle. The amount of pressure of the pickup arm should be adjusted for 1 to 1¼ ounces in Model 960001-2, and 1½ to 1¾ ounces in Models 960001 and 960001-3. The details of how to make these adjustments are described in the Manufacturer's service manuals for each changer.

78 RPM INTERMIX RECORD CHANGERS

15-8. – Two other 78rpm changers in common use are the Garrard RC 65 and the Thorens CD 40. These changers are each equipped with a high quality variable reluctance type pickup, and each will play 10 and 12 inch 78 rpm records *intermixed* in any order. In addition, the Thorens has special "pause" and "repeat" actions.

Garrard RC 65. – This is a spindle support changer with a step on the spindle used for record selection. A "pusher" side post pushes the record off the step onto the turntable at the proper time in the change cycle. A photograph of the changer is shown here.

Fig. 15-38

This changer will play automatically, a series of ten 10 inch or eight 12 inch records of the standard 78 rpm type. It will play a series of *eight* records *intermixed* in any order, automatically. Velocity trip is used, and the changer shuts off automatically upon completion of the last record. The pickup arm is equipped with a lightweight high-quality variable reluctance type pickup with a long life sapphire point. The motor is equipped with a variable speed adjustment.

Turntable Speed. – The speed of the turntable

Fig. 15-39

is most easily checked by means of a stroboscopic disk. A picture of such a disk is shown here in Fig. 15-39.

This particular disk has segments for checking both 78 rpm and 33-1/3 rpm records. For this changer we are interested only in the inside segments since the turntable speed should be 78 rpm.

The following procedure should be used in checking and adjusting turntable speed. Place a 10 or 12 inch record in the turntable and place the disk on top of the record. A special light source is required. An ordinary filament lamp stays bright continuously, even when lit by 60-cycle alternating current. A neon lamp or a single fluorescent lamp, however, flashes on and off at twice the power line frequency. The interruptions of light are not noticeable to the eye, but are essential for the operation of the stroboscopic disc. The light should shine directly upon the disc segments. Put the turntable in motion, turn on the light and observe the relative motion of the inside (in this case) segments. If the turntable speed is exactly right, the inner segments will appear to be stationary. If the segments are moving backwards (counter-clockwise) the turntable speed is too low. If the segments are moving forward, the turntable speed is too high. Adjust the variable speed control (if necessary) until the segments appear stationary. When this occurs, the turntable is running at the proper speed.

Thorens CD 40. – This changer is a single speed 78 rpm, intermix type. A photo is shown here:

Fig. 15-40

It is a spindle support changer. A step on the spindle is used for record selection and a pusher arm is used to push the record off the spindle onto the turntable. The changer is designed to play automatically a series of ten 10 inch or eight 12 inch records of the standard 78 rpm type. You may also *intermix* a series of eight 10 and 12 inch records in any order. A light-weight, high-quality variable reluctance pickup is provided. This is equipped with a long life sapphire point. The mechanism utilizes velocity trip, and automatically shuts off at the conclusion of the last record. A variable speed control is provided at the top of the motor board. The correct operating turntable speed may be found by the use of a stroboscopic disc as previously described.

You will find two features in this changer which are not ordinarily encountered in other changers. These are: (1) a repeat action; and (2) a pause action. The repeat action makes it possible to repeat any record being played. The pause action automatically provides a 2½ minute pause after each selection.

TWO-SPEED RECORD CHANGERS

15-9. In order to accomodate all three record speeds, some receivers are equipped with two separate changers. One is the 45 rpm changer and the other is a two-speed changer. The two-speed changer is designed to play automatically either the standard 78 rpm records or the 33-1/3 rpm fine groove records. These two-speed changers differ from conventional single speed changers in two major respects. The first is the addition of a speed changing mechanism to change from 78 to 33-1/3 rpm. A dual stylus cartridge is also supplied to accomodate the difference in groove widths between the two types of records.

Speed Changing Mechanism. – As a typical example, let us examine the speed changing mechanism of the Model 960282-1 changer. The method of speed changing is illustrated in Fig. 15-41.

As you can see in the drawings, the motor shaft is thin at the top and thick lower down.

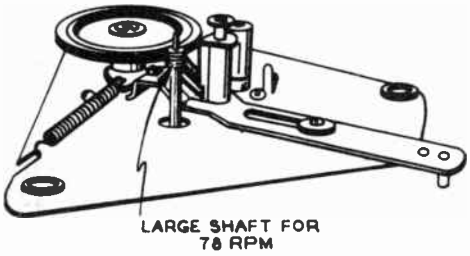

Fig. 15-41 (a)

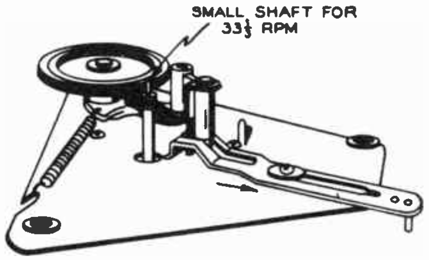

Fig. 15-41 (b)

Speed changing is accomplished by raising or lowering the rubber tired idler wheel on the dual diameter motor shaft. The motor shaft proper does not move vertically. To operate at 78 rpm, the idler wheel is moved to the down position by rotating the speed control knob to "78". This causes the idler wheel to engage the large diameter section of the motor shaft as shown in Fig. 15-41 (a). When the speed control knob is rotated to the "33-1/3" position the idler wheel is *raised* so that it now engages the *small* diameter portion of the motor shaft. This causes a reduction in speed of the idler wheel which in turn creates a reduction of the turntable speed to 33-1/3 rpm. Other changers may use slightly different schemes to change speed, but in general will be similar in principle.

Dual Stylus. – We learned in the earlier part of this lesson that standard groove and fine groove records require styli of different diameters. In order to make use of a permanent type stylus without resorting to needle changing for each speed, a crystal cartridge equipped with a dual stylus is usually supplied. The construction of such a dual stylus is illustrated here:

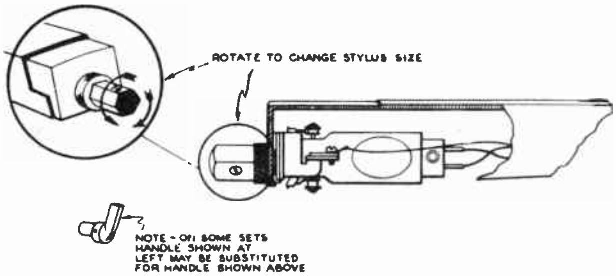

Fig. 15-42

In order to change the stylus, it is only neces- to rotate the knob as shown until you read the desired speed on top. Aside from the features of speed change and a dual stylus, you will find two-speed changers to be very similar to conventional changers previously discussed.

Model 960282-1. – This is a spindle support changer, using a step on the spindle for record selection and a side post pusher to cause the records to drop onto the turntable. A photo of the changer is shown here:

Fig. 15-43

This record changer is designed to play automatically a series of twelve 10 inch, or ten 12 inch records of the standard 78 rpm type or of the long playing 33-1/3 rpm "microgroove" type. The pickup arm is equipped with a light-weight, dual stylus crystal cartridge. Two needles (styli) are required, since as we previously mentioned, the needle required for playing microgroove records is considerably narrower than for conventional records. Proper needle selection is easily accomplished by turning a small knob at the front of the pickup arm. This changer uses velocity trip.

Adjustments. – The following adjustments may be required to insure correct operation of this changer:

1. Pickup landing adjustment
2. Adjustment of push-off slides
3. Lock-out lever stop adjustment
4. Support post position adjustment
5. Trip arm friction clutch adjustment

In the event that the pickup arm fails to land properly for either 10 or 12 inch records, there are individual adjustments which may be reset. If the records do not separate easily, a screw adjustment of the push-off slides may be changed. The lock out lever stop will cause jamming of the mechanism if improperly adjusted. The position of the support post may have to be readjusted if the records do not separate properly. If the pickup jumps grooves or if premature wear of the record side walls is noted, it may be caused by improper setting of the trip arm friction clutch.

No detailed description of these adjustments is given here, since these are readily available in the Service Data manuals.

Model 960285-1. – This is also a spindle support changer, with a step on the spindle for record selection. This changer is rather unique, in that the mechanism which pushes the bottom record off the step is built into the spindle. There is no side pusher post, but a long record support arm is provided to stabilize the records on the spindle. A photo of the changer is shown in Fig. 15-44.

This changer is a *two-speed* type (78 and 33-1/3 rpm). It is designed to play automatically, a series of twelve 10 inch or ten 12 inch records at either speed. A series of ten intermixed records (10 and 12 inch) may also be played at either speed. Any particular series of records must, of course, be all for the same speed. The pickup arm is equipped with a light weight dual stylus pickup cartridge. The proper stylus can be easily selected by turning a small knob at the front of the tone arm. Velocity tripping is used.

Fig. 15-44

Adjustments. – The following adjustments may be required for correct operation of this changer:

1. Pickup landing adjustment
2. Pickup arm height adjustment

We will now describe the procedure for making these two adjustments since they must be made by the installation man. The location of the various adjustments may be seen here:

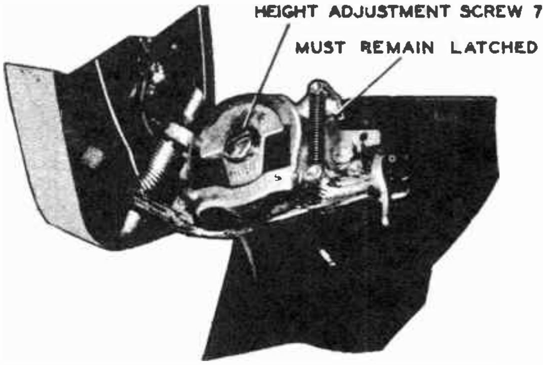

Fig. 15-45

This view shows the pickup arm lifted up in the vertical position.

Exact Landing Adjustment. – First remove power from the changer and place a 10 inch record on the turntable. Turn the function knob to "reject", and release it. Now rotate the turntable by hand until the pickup is just about to land. If the pickup is landing too far *out* from the record, loosen set screw "A" a few turns and tighten set screw "B" until correct landing is achieved. If the pickup is landing too far into the record, loosen set screw "B" a few turns and tighten set screw "A". Adjust until correct landing is achieved.

Pickup Arm Height Adjustment. – The under side of the pickup arm should normally clear above the pickup rest by 1/8 to 3/16 inch during the change cycle. If this is not correct, adjust screw(76)for proper clearance.

THREE-SPEED RECORD CHANGERS

15-10. In order to handle all three record speeds and conserve space, many receivers are equipped with a single changer capable of playing any of the three types of records. It is very similar to the two speed changers in that a dual stylus cartridge is used to accomodate the conventional and fine groove records. These changers must also have a speed changing mechanism to select the desired speed. They differ from the two-speed changers in that the turntable can turn at the speed of 45 rpm, as well as 33-1/3 and 78 rpm.

An adapter plug must be used for the large center-hole 7 inch record. This adapter fits tightly inside the large center-hole of the 45 rpm record. It is a flat round disk with a small center-hole having the same diameter as a conventional 10 inch 78 rpm record.

Speed Changing Mechanism. – Practically all three-speed changers use three different sized drive wheels. Operating on any one speed, one particular drive wheel is held against the rotating motor shaft and the idler wheel. The motor shaft will turn the drive wheel, and this motion is transferred to the turntable through the idler wheel. Switching to another speed consists of physically changing the position of the three drive wheels so that a different sized drive wheel is now held against the motor shaft and idler wheel. Two typical examples of this type of changer are the Webster Model 346 and the V-M Model 950.

Webster Model 346. – This is a single-post, spindle support changer. The record stack is supported by a step on the spindle, and a push-off blade on the side post causes the bottom record to drop to the turntable. A photo of this changer is shown here.

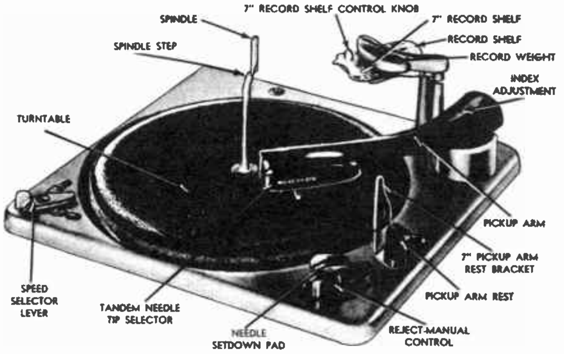

Fig. 15-46. Webster Model 346three-speed record changer.

This changer will play automatically a 1 inch stack of 7 in., 10 in., or 12 in. records at speeds of 33-1/3, 45 or 78 rpm. The cartridge must be pivoted to the standard position, marked "Std." for all 78 RPM records and to the position marked, "Micro" for the fine groove, slower speed records, which includes both 45 rpm and 33-1/3 rpm records. Velocity trip is used for automatic operation.

The pick-up arm returns to the rest position after the last 10 or 12 inch record has played. This is not true for the last 7 inch record, which keeps repeating its play. In all cases the turntable keeps rotating and must be shut off manually. In the "off" position the drive wheels and the idler wheel are disengaged from each other and from the motor shaft. This minimizes the possibility of the rubber tires developing a flat spot.

Non-standard sized records can be played individually by pushing the "Reject-Manual" lever to manual. To play 7 inch records an extra 7 inch record shelf on the side-post must be placed in position.

Adjustments. – The following adjustments, which may be necessary for correct operation of the changer, are explained in detail in the manufacturer's service notes.

1. Pick-up arm height adjustment
2. Set-down or landing adjustment
3. Push-off blade adjustment

V-M Model 950. – This is a spindle-support changer having no side-post. A long record support arm is provided to stabilize the record stack on the spindle, as shown here:

Fig. 14-47. VM Model 950 three-speed record changer.

This changer will play automatically ten 12 in. twelve 10 in. or twelve 7 in. records. Intermixing of the 10 inch and 12 inch records at either 33-1/3 or 78 rpm can be done as long as all the records in the stack require the same speed. The pick-up arm, as in all multiple speed changers, has a dual stylus. The large center-hole records must, of course, have adapter plugs inserted in the records.

The mechanism that pushes the bottom record off the step is built into the spindle. Velocity trip is used, and the changer shuts off after the last record has been played. Single, non-standard size records may be played manually.

Adjustments. – The following adjustments may be necessary for correct operation of the changer.

1. Pick-up arm height adjustment.
2. Pick-up arm set-down point
3. Pick-up arm weight (needle pressure)

These are explained in detail in the manufacturers' service notes.

CHANGER MODEL	*SPEED RPM*	*TRIPPING METHOD*	*TYPE OF RECORD SUPPORT*	*CARTRIDGE*	*INTERMIX?*	*SHUT OFF AUTOMATICALLY?*	*TURNTABLE SPEED CONTROL?*
RCA RP 168	45	Position	Spindle	Crystal	No	No	No
RCA RP 176	78	Eccentric	Two-Post	Crystal	No	Yes	No
RCA RP 177	78	Eccentric	Two-Post	Crystal	No	Yes	No
RCA RP 178	78	Eccentric	Spindle	Crystal	No	No	No
RCA 960001	78	Eccentric & Position	Two-Post	Crystal	No	Yes	No
Garrard RC 65	78	Velocity	Spindle	Variable Reluctance	Yes	Yes	Yes
Thorens CD 40	78	Velocity	Spindle	Variable Reluctance	Yes	Yes	Yes
RCA 960282-1	78-33-1/3	Velocity	Spindle	Crystal dual-stylus	No	No	Two-speed Knob
RCA 960285-1	78-33-1/3	Velocity	Spindle	Crystal dual-stylus	Yes	Yes	Two-speed Knob
Webster 346	33-1/3, 45, 78	Velocity	Spindle	Crystal dual-stylus	No	No	Three-speed knob
VM 950	33-1/3, 45, 78	Velocity	Spindle	Crystal dual-stylus	Yes	Yes	Three-speed knob

NOTES

NOTES

NOTES

NOTES

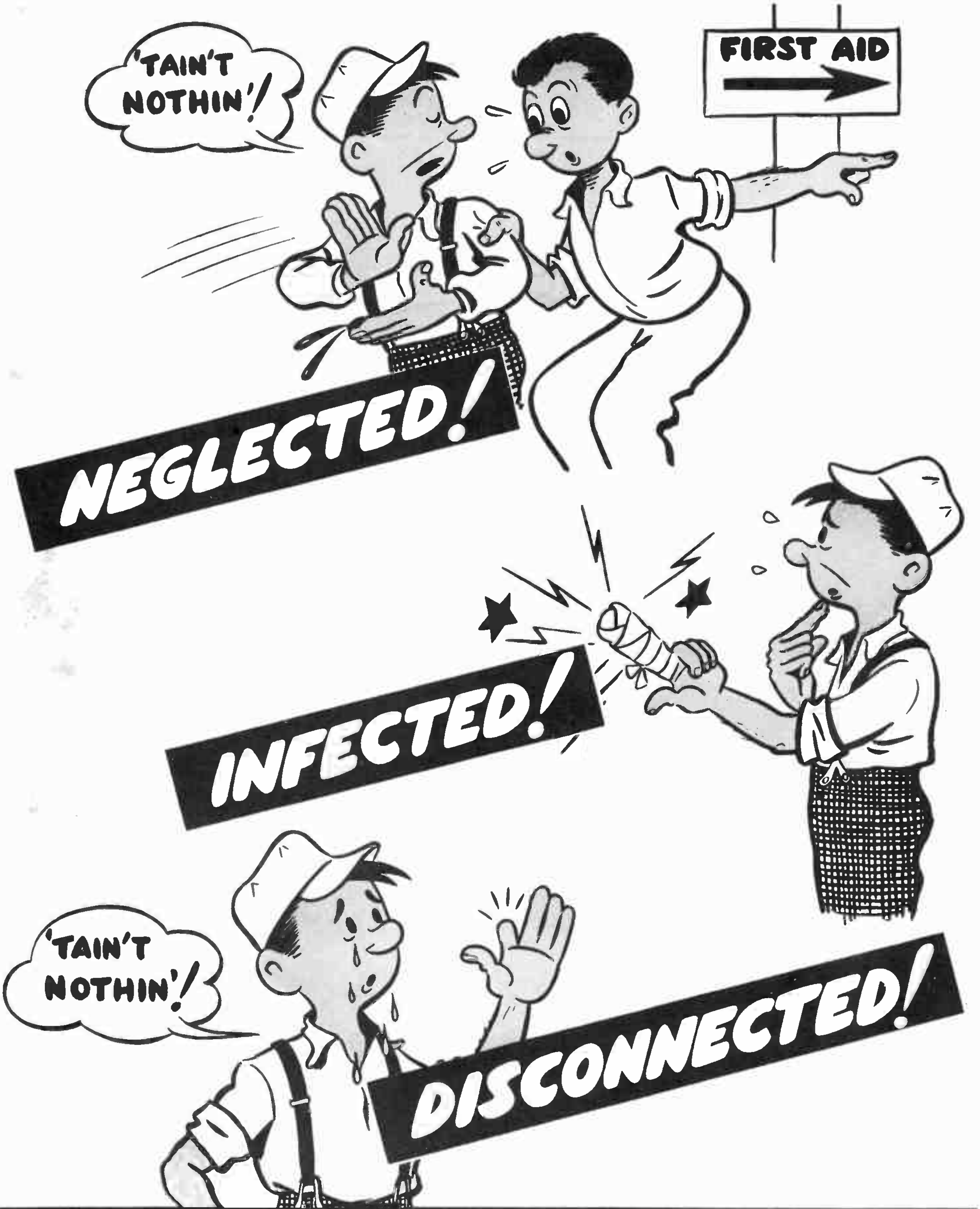

GET FIRST AID PROMPTLY

NATIONAL SAFETY COUNCIL · CHICAGO, · PRINTED IN U.S.A. 7997

HOME STUDY
TELEVISION
SERVICING COURSE

PREPARED BY

RCA INSTITUTES, INC.

A SERVICE OF RADIO CORPORATION OF AMERICA

HOME STUDY DEPARTMENT
350 West 4th St., New York 14, N. Y.

UNIT FOUR

Lesson 16: D-C ELECTRICITY
Lesson 17: A-C CIRCUIT PRINCIPLES
Lesson 18: RESONANT CIRCUITS

TELEVISION SERVICING COURSE

PREPARED BY

RCA INSTITUTES, INC.

A SERVICE OF *RADIO CORPORATION OF AMERICA*

HOME STUDY DEPARTMENT
350 West 4th St., New York 14, N. Y.

LESSON 16

D-C ELECTRICITY

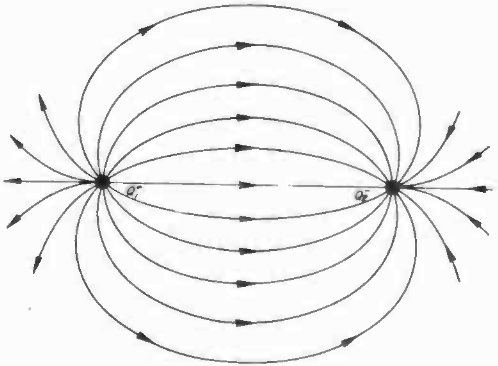

Lesson 16

INTRODUCTION

16-1. This lesson marks a milestone of sorts in the Course. Up to now, we have been concerned primarily with putting over as much detailed information as possible on *how* to install television receivers and antennas. Some of this required that certain physical facts be stated – such as that filter condensers can retain a dangerously high charge, or that television waves are reflected by large buildings. But we haven't tried to explain *why* these facts were so. It wasn't necessary. But from now on, we're going to deal with specific circuits and their behavior. And to understand their behavior, we'll have to have a clear understanding at every point of why they work the way they do.

Two Ways to Understanding. – At this point, many of you are going to start raising objections. You will think of Joe Doakes, one of the finest television service technicians in the business, who insists that he doesn't need any "theory" to fix television receivers. Maybe so. But we'll lay dollars to doughnuts that one of two things is true about Joe. Either he has learned and forgotten more "theory" than many design engineers, or he has spent so many years fixing radios that he has absorbed his theory "through the pores of his skin" without even realizing it. By experience, he has learned that certain circuits behave in a certain way, and even though he has never formulated in words the principle of why they do so, his experience enables him to predict the behavior of a new circuit because he recognizes it as being just like some similar circuit that he remembers.

The trouble is, that kind of experience takes years to acquire. Fortunately, there's a quicker way to get the understanding we need. No matter how complicated a circuit is, it consists of relatively simple components – resistors, condensers, vacuum tubes, and such. While there are thousands of possible circuits, there are only a handful of different kinds of components. Each of these components behaves in an entirely predictable manner, according to definite principles, or "laws". If we really know and understand how each component behaves under a prescribed set of circumstances, we can predict how any circuit behaves, and why. Learning these basic principles takes a lot less time than getting acquainted with thousands of circuits individually.

Kinds of Circuit Components.—There are only four main groups or kinds of components that we have to study. They are: (1) resistors, (2) coils, (3) condensers, and (4) vacuum tubes. These will cover 99-44/100 % of the components we will encounter in television receivers. In this and the next three lessons, we'll study these four kinds of components one at a time – or more or less so. We'll concentrate on their *electrical* characteristics, without bothering too much with their physical appearance, and the minor differences between members of the same group. That will come later on, when we make an intensive study of the TV receiver chassis, as a final preliminary to explaining the various circuit sections and how to service them.

One final word before we get down to business. As we study one basic principle after another, we'll tie it up as directly as possible with actual TV receiver circuits. But that won't always be possible, because most receiver circuits involve several different principles, often including some that we haven't reached at a particular point in the course. Consequently, it may often seem that we're getting pretty far afield from "practical" circuits. But we assure you, every point we take up will have a direct bearing on actual circuit operation when we get to it.

Now it *is* time to get down to business. And the most basic place to start is to try to get a clear idea of just what this electricity is.

WHAT IS ELECTRICITY?

16-2. You can't work around any kind of electrical shop without hearing a lot about "current" and "voltage", and "ohms" and "watts". These are some of the most frequently encountered electrical terms and quantities. Perhaps for that reason, many textbooks on electrical fundamentals start by explaining the meaning of these terms. They often do it by comparing an electric circuit to a plumbing system. Current, they tell you, is like the water flowing through the pipes, and voltage like the electrical pressure that pushes it around.

The analogy is convenient, and we'll make use of it. But it isn't the whole story, and can lead to some wrong ideas if we're not careful. Let's not kid ourselves – the circuits in a TV receiver are a bit more complicated than a plumbing system, and if we don't pin down their behavior in terms of electricity, not water, we're very likely to get lost.

Electrical Charge. – Several thousand years ago, somebody discovered that small pieces of certain materials were attracted to other substances, under special circumstances. For instance, when a rod made of *amber* (a sort of petrified sap) was rubbed with fur, it would actually make small bits of paper jump short distances and stick to it. There was, in other words, a *force* tending to pull the two bodies together. This force was unlike that of gravity, and apparently differed fundamentally from any kind of force then known.

It took centuries of investigation and thinking to arrive at an explanation of this unique force. It was recognized that the two bodies involved had somehow acquired a new property, which was called *electrical charge*. (The Greek word for amber was *elektron*, which was taken over to describe the phenomena we know as *electrical.)*

It was also found that a definite quantitative relationship existed. The magnitude of the force increased as the charge on either body was increased, and diminished as the bodies were moved further apart.

The new idea in this relationship is not the force, but the peculiar property we have called electrical charge. *Charge is the fundamental quantity in all electrical phenomena; everything else traces back to it.* That being the case, let's examine it more carefully, in the light of more recent scientific thought.

Structure of Matter. – All matter is composed of extremely small particles called *molecules*. Molecules, in turn, are composed of still smaller particles called *atoms*. A molecule may consist of from two to several thousand atoms, depending on the substance.

There are different kinds of atoms – as many kinds as there are chemical *elements*. An element is a special kind of substance that cannot be formed by ordinary chemical combination of other substances. Elements, on the contrary, combine chemically with each other to form more complex substances called *compounds*. There are less than 100 known elements occurring in nature. All of the millions of possible compounds are formed by combinations, in varying proportions, of two or more of these elements. The atom is the smallest particle of an element that retains the chemical properties of the element.

An atom may be visualized as a miniature solar system. Like the solar system, it is mostly empty space. It consists of an almost infinitesimally tiny solid nucleus, around which one or more even smaller particles revolve in orbits, much as the planets revolve about the sun. Also, the distances between the particles are as great, relative to the size of the particles, as those between the planets. These smallest particles are *electrons*. They are held in their tiny orbits by forces of electrical attraction. Each electron is the smallest *charged particle* recognized by science. To give you some idea of its size, it would take more than 450,000,000,000,000,000,000,000,000,000 to weigh one pound!

Properties of Electrons. – Electrons are all alike. They have the same mass and dimensions, and carry the same amount of charge. The *number* of electrons revolving about an atomic nucleus is what distinguishes an atom of one element from an atom of some other element. The hydrogen atom has one electron, copper has 29, and uranium has 238.

Let us return for a moment to the early study of electrical charges. It was observed that substances could apparently become charged in two different ways. The force between bodies charged the *same* way was one of *repulsion*, while the force between bodies charged *differently* was one of *attraction*. To distinguish these two "kinds" of charge, it was decided to call one kind *positive*, and the other *negative*.

The force between an atomic nucleus and its electrons is one of attraction. They must, therefore, be charged oppositely. The charge of each *electron is negative;* the charge of the nucleus is positive, and equal in magnitude to the sum of the charges of all the electrons in the atom. Since the positive and negative charges within the atom exactly balance each other, the atom as a whole is said to be electrically *neutral* as far as outside bodies are concerned.

We stated above that all electrons are alike in size and charge. They differ, however, in the strength of the force that holds them in their orbits about the nucleus. The electrons closest to the nucleus are tightly bound, and never escape from the particular nucleus with which they are associated. The outermost electrons, however, are more loosely held. When the atoms of a piece of substance are close to each other (as they are in solids), these outer electrons experience forces of attraction by more than one nucleus, and can meander through the substance, swinging from one atom to the next, much like the girls in a square dance set.

Charged and Neutral Bodies. – Since each atom has equal positive and negative charges, the same is true of a large collection of atoms. A solid body is merely a large collection of atoms arranged in a certain way. Even though some electrons have wandered off base, so to speak, the total number of positive and negative charges is unchanged, and still equal, so the body is electrically neutral.

If somehow we upset this balance by adding more electrons, the body has a surplus of negative charges, and is therefore itself negatively charged. On the other hand, if some of the wandering electrons in the body are removed, there is a surplus of positive charges, unbalanced by negative charges, and the body is positively charged. To summarize, *a body is negatively charged if it has a surplus of electrons, and positively charged if it has a shortage of electrons*. This last statement applies to any body of atomic size or larger. It does not apply to the electron itself. An electron cannot lose its charge, or acquire more charge. Charge is a property of electrons. The charge and mass of an electron are inseparable. They are, in fact, two properties of the same thing. What all this adds up to is that, so far as we are concerned, *electrons ARE electricity*.

Electric Field. – Now let's turn our attention to the idea of a *field*. Suppose there are two oppositely charged bodies, fixed in space so they can't move. They are, of course, attracted to each other. But now suppose we bring near them a single electron, whose charge is much smaller than the charge on either of the charged bodies. The electron will be repelled by the negatively charged body, and attracted by the positively charged body. The net resultant of these two forces is a force experienced by the electron in the direction shown by the arrow in Fig. 16-1.

Fig. 16-1

If we could put the electron at other points near Q_1 and Q_2, it would experience a force in each place, having a definite magnitude and direction, represented by arrows like this:

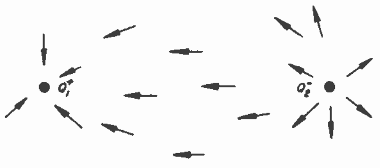

Fig. 16-2

Now let's remove the electron, and ask ourselves a silly question. With no electron to feel the force, *is the force still there?* This is a little like the old gag: If a tree falls in the forest with nobody around to hear it, does it make a noise? In the case of our force, however, the answer has practical importance. Our answer is yes – the force is there, and all we would need to detect it is to introduce an electron, or any other charged body, into the space surrounding Q_1 and Q_2 to experience the force.

We say that the region surrounding Q_1 and Q_2 is a *field of force*, which can exert its force on any suitable object that comes within it. In this case, the field is called an electric field, which we can define as *a region of space in which a force exists, which can be experienced by any charged body entering the region.* Strictly speaking, the field consists of the *condition* of the region of space, whereby forces are distributed throughout its extent, rather than of the space itself. But since this distribution of force cannot very well exist apart from space, there should be no great confusion caused by defining the field as we have.

Note that the existence of the field depends on the existence of Q_1 and Q_2. But it is convenient to think of the electric field independently. We can even draw a "map" of the field, by drawing lines between Q_1 and Q_2 such that at every point they show the direction of the force the field would exert on a charged body, as in Fig. 16-3.

By convention, the direction of these lines (called *field lines*, or *lines of force*, or lines of *electric flux*) is from the positive to the negative charged body. They thus indicate the direction of the force that would be felt by a positive charge. An electron is a negatively charged particle, so the force on it would be opposite – toward the positively charged Q_1.

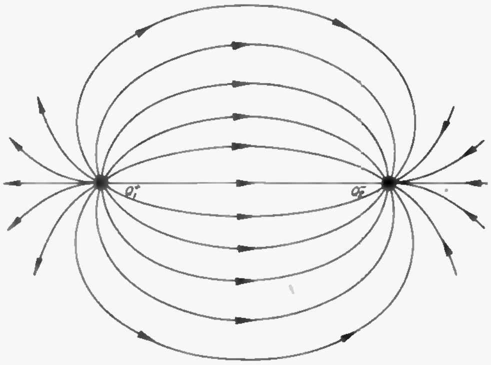

Fig. 16-3

The field lines that seem to be wandering off into space are doing exactly that – except that they all return and terminate on a negative charge. Theoretically, the field extends out to infinity, so some of the lines must go there too. Also theoretically, there are exactly as many positive charges in the entire universe as there are negative charges. Therefore all electric field lines must originate on a positive charge and terminate on a negative charge, though not necessarily on the nearest one.

The *strength* of the electric field at any point is defined as the amount of force exerted by the field on *a unit charge.* A unit charge is merely some quantity of charge that is arbitrarily adopted as a convenient measure. In the practical system of electrical units, the unit of charge is called a *coulomb,* and is equal to the charge of about 6,000,000,000,000,000,000 electrons. 6×10^{18}

Theoretically, the electric field set up by any two charged bodies extends out to infinity in all directions. But a short distance from them, the force would be so weak as to be negligible, and in practical applications of electric fields, only the region between or near the two charges need be considered. (An exception is an electric field whose strength is changing rapidly. But this comes under the topic of radiation of electromagnetic waves, which we'll defer until Lesson 21.)

Potential Difference. We are now ready for another idea – that of *potential difference.* Return to the field between Q_1 and Q_2, and consider that we have a *unit positive charge* (which we call *q*) at point *A*, as in Fig. 16-4.

We now push *q* to point *B*. We have to push it against the force of the field, and this requires *energy.* Energy is merely *force in action,* and is equal to the force multiplied by the distance through which it acts. No matter by what path we move our unit charge from point *A* to point *B*, the amount of energy expended is the same. We call this energy the *potential difference* between points *A* and *B*, and we express its magnitude in *volts*. Voltage then, is a *measure of the energy required to move a unit charge between two points in an electric field.*

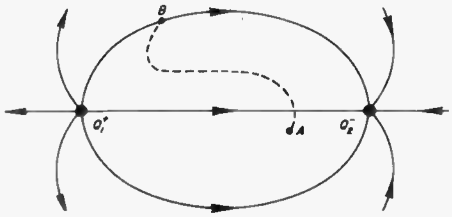

Fig. 16-4

In practice, however, we generally think of a volt as the measure of the potential difference between the two points. Thus, we would say that "point *B* is at a potential of so-many *volts* above point *A*", or that "the potential of *B* is plus so many volts with respect to point *A*".

If we let go of our unit charge when it reached point *B*, the force of the field would cause it to move to some point at a lower potential – that is, nearer Q_2. We might conveniently think, therefore, of the potential of point *B* as a kind of electrical pressure causing the charge to move. We should always remember, however, that actually, the potential difference exists because the electric field exists; and the field exists only because there are two oppositely charged bodies, Q_1 and Q_2. If we think far enough, therefore, *the only thing that can cause any charge to move is the force set up by the presence of some other charge.*

CURRENT AS CHARGE IN MOTION

16-3. So far, our consideration of electrical charge has been confined to the conditions prevailing when the charge is standing still. We found that charged particles exert forces on each other, and on other charged particles that come in their vicinity. Now we all know that when a force of any kind is applied to a body, the body has to move, unless some other equal and opposite force prevents it. Electrons – and other charged particles – are no exception. Whenever there is a concerted movement of electrons from one place to another, that movement constitutes an *electrical current.* Current, in other words, is merely *charge in motion.*

Let us examine under what circumstances such a mass migration of electrons can take place, and how. We shall consider briefly two conditions: (1) motion of electrons through a vacuum, and (2) migration of electrons through solid materials, like wires.

Current in a Vacuum. – Suppose we have two metal plates, parallel and close to each other, but not touching, thus:

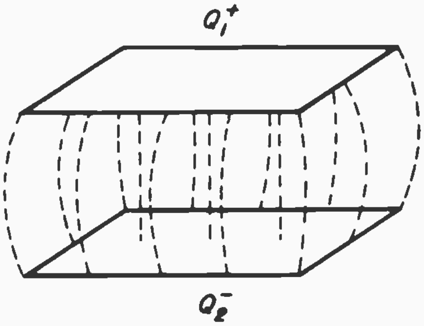

Fig. 16-5

The plates are oppositely charged as shown – that is, there is a surplus of electrons on the lower plate, and a shortage of electrons on the upper one. The plates are completely surrounded by a vacuum. The charges on each plate distribute themselves evenly over the surface, so that most of the field lines are straight lines perpendicular to the surfaces, as shown. (Incidentally, the field would still exist, and there would still be a potential difference between the plates, if *both* plates had a surplus of electrons, so long as one had more than the other. But it simplifies our discussion if we consider oppositely charged plates as shown. Besides, this condition is closer to that existing in practical circuits.)

Under ordinary circumstances, the surplus electrons on the lower plate will remain on its surface. The attraction of the positive charges on the other plate is not strong enough to pull them free. (Remember the nuclei of the atoms at the surface are pulling the electrons back – and they're a lot closer than the charges on the other plate, so their attractive force is much greater.) But if the lower plate is heated sufficiently, these electrons will jump free of the lower plate, into the electric field, which will propel them to the upper plate. This migration of *free electrons* constitutes an electric current through a vacuum. However, as each electron reaches the positive plate, it neutralizes some of the positive charge there. As soon as the surplus electrons have all escaped from the lower plate, and reached the upper one, the current stops. But if we could somehow continuously replace the electrons that leave the lower plate at the same rate (and remove them from the positive plate), the current would continue steadily. This is just about what happens in a vacuum tube, as we shall learn in Lesson 19.

Now let us consider what happens in solid materials.

Current in Solid Substances. – We have stated that the electrons on a charged plate distribute themselves evenly over the surface. This is because each electron repels each other electron. If any two electrons come too close, the force of repulsion between them pushes them apart again. When billions of electrons do this to each other, the result is the even distribution of electrons that we mentioned.

Now consider also a statement we made in Sec. 16-2 – that some of the electrons in solid materials are free to migrate from one atom to another, and do so continually throughout the substance. Suppose we have a piece of solid material, such as copper, formed into a wire. It contains billions of electrons, swinging from atom to atom in random motion. This random motion is *not* a current, because on the average just as many electrons go in one direction as in the opposite direction, and the *net* migration of electrons is zero. And because of the forces between the electrons, the distribution of electrons throughout the wire is more or less uniform, as we noted above.

Now suppose we place a surplus of electrons at one end of the wire, and take some away from the opposite end, thus:

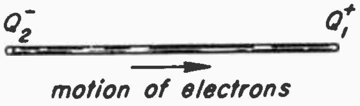

Fig. 16-6

The newly added surplus electrons repel the "swinging" electrons nearest them, and the latter move away down the wire. They crowd the electrons just beyond, and they too move away. This continues throughout the wire, the electrons in each little piece of wire crowding those beyond it, in an effort to re-establish the uniform distribution of electrons throughout the wire. At the same time, the positive charges set up by the shortage of electrons at the other end, attract the electrons nearest them. The result is a *concerted migration of electrons away from the end to which the surplus electrons were added.* This concerted migration is a *current* through the wire.

What happens is very like what might happen if you were to line up 15 pool balls in a straight line on a pool table, close to each other but not quite touching. If you then smack the first ball squarely with the cue ball, each ball will travel a short distance and crowd its next-door neighbor, until the last ball shoots away from the line. The cue ball doesn't gallop down the whole line. But the last ball leaves the line almost at the instant the cue ball strikes. So with the electrons in the wire. Each electron moves through the wire comparatively slowly, but the *force* exerted by the surplus electrons we added is felt almost instantaneously throughout the wire, and electrons move all along the wire practically simultaneously.

Let's reconsider what happens when we add electrons to one end of the wire, and take some away from the other. One end becomes negatively charged, and the other positively charged. This means that a *potential difference* is established between the two ends of the wire, placing the positively charged end so-many volts above the negative end. This is exactly what happened when we set up the field between Q_1 and Q_2 in empty space, as we did in Figs. 16-1 to 16-4. But there's a difference. This time, the "swinging" electrons in the wire supply a means by which the charges at the ends can be neutralized, and these electrons cause a current in trying to do so.

Just as in the case of the plates in Fig. 16-5, once the surplus electrons have succeeded in pushing the swinging electrons along until uniform distribution is achieved, the current stops. But again, if we continuously supply more surplus electrons, and drain off the accumulation of electrons at the opposite end of the wire, the current will continue, always trying to neutralize the charges at the end of the wire, but never quite succeeding. Then we have a steady *direct current*, or *d-c*.

Now let us consider *how much* current will flow – that is, how many electrons we have to add each second, and how many will leave the other end of the wire. This depends on two things: (1) how many surplus electrons we put on the wire initially, and (2) the material and dimensions of the wire. Let's examine the second factor first.

Conductors and Insulators. – Materials differ in the number of electrons per atom that are free to wander from atom to atom – that is, "swinging" electrons – and in the magnitude of the forces that bind these electrons, however loosely, to their parent nuclei. The fewer such electrons there are, and the tighter they are bound to their nuclei, the harder it is to cause them to migrate through the material with a given value of electrical force applied.

Generally speaking, metals contain more and freer "swinging" electrons than other materials. A given force exerted by surplus electrons added to one end of a metal wire will therefore cause a relatively large number of electrons to flow through the wire and out the other end. Such materials are said to be good *conductors*. Silver is the best metallic conductor known, and copper is next.

Materials with few and rather tightly bound "swinging" electrons are referred to as *insulators*. It takes extremely large electrical forces to cause extremely small currents through such materials.

If there were a material such that a surplus charge placed on it would distribute itself instantaneously – literally in zero time – that material would be a perfect conductor. But there is *no such material.* All materials offer some opposition to the movement of electrons within them. This property is referred to as *electrical resistance*. We shall discuss it in some detail in Sec. 16-4. The important thing right here is to note that *there is no such thing as a perfect conductor or a perfect insulator.* However, some materials are such good conductors that for practical purposes we can usually consider them perfect – that is, having zero resistance. And others conduct so little current that we can consider them as perfect insulators, having infinite resistance. Still others are neither very good conductors nor very good insulators, and are sometimes referred to as *resistors.*

Sources of Current Electrons. – In explaining what current is, and what causes it, we spoke rather glibly of "adding electrons" in a continuous supply to one end of a wire, and draining them off at the other, without indicating how this might be accomplished. That is the question we want to answer now.

Note that as soon as we add one surplus electron to a wire, it will exert a force on the next electron we try to add, tending to push it away. To overcome this force, it takes *energy* (just as it took energy to give the initial smack to our cue ball). A practical device to set up the charge at the ends of the wire must supply both a continuous stream of electrons, and the energy to move them against the field of the electrons already there. Two kinds of such devices are *batteries* and *generators.*

We all know that energy is indestructible. (Well alright, maybe it is sometimes interchangeable with matter. But we're concerned with television, not atomic bombs.) Energy can be converted from one *form* to another. Heat, chemical energy, electrical energy and mechanical energy are all different forms of the same thing, and by the use of suitable devices, one can be converted into the other. A *battery* is merely a device that converts chemical energy into electrical energy. A *generator* converts mechanical energy into electrical energy. (Sometimes the term "generator" is applied also to a battery, and we shall occasionally use it in this sense.)

Potential Difference, Voltage and Emf. – Both batteries and generators can furnish a continuous supply of electrons to one end of our wire, and at the same time remove electrons from the other end. The generator (and here we mean to include batteries as special kinds of generators) is equipped with two *terminals* to which the ends of the wire are connected. The generator keeps a surplus of electrons at one terminal, and a shortage of them at the other. In doing so, maintaining an undiminished supply of electrons even when current flows through the wire, it also maintains a constant *potential difference* between its terminals. This potential difference is called the *terminal voltage* of the generator. It is, of course, also the potential difference between the two ends of the wire.

The voltage developed by a generator supplying a continuous stream of electrons is called an *electromotive force*, usually abbreviated to *emf.* It will be convenient from this point on to think of the emf as a sort of electrical pressure causing the current to flow. We shouldn't forget, though, that *both* the emf and the current exist because the generator is a source of both electrons and energy.

A Simple Electric Circuit. – A generator connected to a wire having resistance is the simplest possible electrical circuit. The universally accepted symbols by which such a circuit can be simply represented in a diagram are like this:

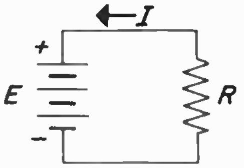

Fig. 16-7

The long and short parallel lines represent a battery, with the long line at the end representing its *positive terminal.* Its emf is represented by the letter *E*. Like potential difference, the magnitude of the emf is expressed in *volts.*

The zigzag line represents the *resistance* of the wire and anything connected to it. The magnitude of this resistance (which we shall discuss further in the next section) is designated by the letter *R*. The lines drawn between the battery and the resistance symbol indicate that there is a path for the electrons between the two. All of the resistance in the circuit, however, is considered as being included in the quantity represented by *R* and the zigzag line; the straight connecting lines themselves represent no additional resistance.

The fact that a current is flowing is indicated by the arrow and the letter *I*. We have drawn the arrow in the direction in which the electrons move, toward the positive terminal.

Relation Between Current and Voltage. – It is easy, by means of meters that we shall describe later in this lesson, to measure both the terminal voltage applied to a circuit, and the current that flows through it. It is also easy to adjust the terminal voltage so that it is continuously variable from zero to any reasonable value desired. If we were to set up such a circuit as that of Fig. 16-7, and equip it with a variable voltage source and meters for measuring both the voltage and the current, we would find that the *current is proportional to the voltage,* or emf. That is, if we double the voltage, the current automatically doubles – no more, no less. The explanation of this fact is simple.

If our source supplies twice as much energy, it will pile up twice as many surplus electrons at one end of the wire initially. They will exert twice as much repelling force on the electrons already in the wire, and electrons will be propelled through the wire twice as fast, so that twice as many pass any given point in the wire each second. At the same time, if the energy source is able to supply enough energy continuously to *keep* twice as many surplus electrons at the end of the wire, even while current flows, the potential difference, or voltage, between the ends of the wire will also be twice as great. Thus, *the current and the voltage increase at the same rate.* In practice, as we indicated earlier, it is convenient to think of the current increasing *because* the voltage increases. This idea is encouraged by the fact that our meters measure voltage, not charge.

Unit of Current. – We defined current qualitatively as *charge in motion.* The unit in which current is measured represents so-many electrons passing a given point in a circuit each second. The unit of current is the *ampere.* An ampere is one coulomb of charge passing a given point each second. We have defined a coulomb, the practical unit of charge, or *quantity of electricity.* (That is why a given amount of charge is usually represented symbolically by the letter q, for "quantity".) A coulomb, you recall, is a quantity of electricity whose charge is equal to that of about 6×10^{18} electrons.* All we have to remember is that that's a lot of electrons – say a bushel of them – and that when that many electrons pass a point in a circuit each second, we say that one ampere of current flows.

An ampere is about twice as much current as flows in an ordinary 60-watt lamp in a 120-volt circuit. Currents in television receivers may be several amperes in the power supply circuits, but in individual components, they will often be only small fractions of an ampere – a couple of hundredths of an ampere or less. For convenience in dealing with these very small currents, it is customary to express them in *milliamperes.* The prefix *milli-* means "one one-thousandth" (1/1000). Thus a milliampere is 0.001 ampere; 20 milliamperes is 0.020 ampere, or 2/100 ampere. "Milliamperes" is usually abbreviated to *ma.* in writing, and sometimes to "mils" in speech.

Even smaller currents are often expressed in *microamperes.* A microampere is a millionth of an ampere, or a thousandth of a milliampere. Thus 1,500 microamperes is the same as 1.5 ma. or 0.0015 ampere. "Microampere" is abbreviated $\mu a.$, where the Greek letter μ (pronounced *mu*) is used for the prefix *micro-* to distinguish it from *m* for *milli-*.

ELECTRICAL RESISTANCE

16-4. In the preceding section, we stated that all materials offer some opposition to the flow of electrons through them, and that this opposition is called *electrical resistance.* It is the purpose of this section to discuss the property of resistance more thoroughly. To be useful to an engineer, a property of material must be *measureable,* and its magnitude expressible in numerical quantities. So our first concern will be with the units in which electrical resistance is expressed.

Unit of Resistance. – The unit of electrical resistance is the *ohm.* A circuit is said to have a *resistance of one ohm if an emf of one volt causes a current of one ampere to flow through the circuit.*

It follows from this definition of an ohm that if the voltage applied to a circuit is *two* volts, and the current is *one* ampere, the resistance of the circuit is *two* ohms. Generalizing, we can state this relationship as follows:

The resistance of a circuit, in ohms, is equal to the applied emf, in volts, divided by the current through it, in amperes. This can be stated more concisely like this:

$$\text{resistance} = \frac{\text{voltage}}{\text{current}}$$

By writing the letter symbols used in Fig. 16-7 instead of words, we can express it even more concisely thus:

$$R = \frac{E}{I}$$

This relationship tells us that if we know, or can measure, the voltage across a circuit and the current through it, we can calculate the resistance of the circuit. Thus, if we apply an emf of

---

*6×10^{18} is merely a shorthand way of writing the number 6, followed by 18 zeros. This way of writing very large or very small numbers is a convenient one commonly used by engineers and technicians, and greatly facilitates calculations. It is explained fully in any good elementary text on the mathematics of radio.

50 volts, and measure 2.5 amperes of current, the resistance of the circuit is:

$$R = \frac{50}{2.5} = 20 \text{ ohms}$$

The values, or magnitudes, of resistance encountered in TV receiver components range from a negligibly small fraction of an ohm for the connecting wires, to resistors of several million ohms. The numbers involved in expressing these large values of resistance get inconveniently large, so they are usually expressed in *megohms.* The prefix *meg-* means *million,* so a megohm is a million ohms. On schematic diagrams, "megohm" is often abbreviated to *Meg.*, or less often, just *M.*

A more frequently encountered abbreviation in schematics is *K.* The prefix *kilo-* means *thousand,* and a kilohm is 1000 ohms. The designation "50K" on a schematic would stand for 50,000 ohms.

Ohm's Law. — If we rearrange the expression for resistance given above, in accordance with the rules of simple algebra, we can get:

$$I = \frac{E}{R}$$

In this form, we have a shorthand expression of Ohm's law — *the most important and most basic principle of electric circuits,* and at the same time perhaps the simplest to understand. So let's examine it a little further, and make sure we know exactly what it means.

Ohm's Law, as expressed symbolically above, states that *the current through any circuit is directly proportional to the applied emf, and inversely proportional to the resistance of the circuit.* This means that if the emf is doubled, the current also doubles; and that if the resistance is doubled, the current is cut in half.

The same expression can be interpreted as a concise set of instructions on how to compute the current in a circuit, when we know the voltage and resistance. It shows that we merely divide the emf (in volts) by the resistance (in ohms), and the quotient is the current, in amperes. Thus, if we apply an emf of 120 volts to a circuit whose resistance is 80 ohms, the current is found thus:

$$I = \frac{E}{R} = \frac{120}{80} = 1.5 \text{ amperes}$$

You have to be careful about the units in using this or any other formula. For example, suppose the resistance is 0.5 megohm, and the voltage 1500 volts. Don't overlook that *meg-* prefix. To get a right answer, you have to express the resistance in ohms, thus:

$$I = \frac{E}{R} = \frac{1500}{500,000} = 0.003 \text{ amperes}$$
$$= 3 \text{ ma.}$$

A third way in which the Ohm's Law relationship can be expressed is

$$E = IR$$

This states that if we know the value of a resistance, and of the current through it, we can find the voltage across it by multiplying the current by the resistance. Of course, the units are the same as before — volts, amperes and ohms. For instance, if we know that a current of 20 ma. is flowing in a cathode bias resistor of 650 ohms, we can find the voltage across the resistor thus:

$$E = IR = 0.020 \times 650 = 13 \text{ volts}$$

Relation of Resistance to Material and Dimensions. — Consider a cross-section through a wire or other conductor carrying current, thus:

Fig. 16-8

The dots represent electrons moving through the wire. It is clear that if we decrease the size of the wire, fewer electrons will get through it each second, assuming that the applied emf is the same. Also, we know that resistance varies inversely with current. So by *reducing the area* of the conductor, we have *increased its resistance.*

It is also fairly obvious that if a given emf has to push electrons through a greater length of wire, the resistance of the wire is increased.

Summarizing, *the resistance of a conductor is directly proportional to its length, and inversely proportional to its cross-sectional area.*

The third important factor influencing the resistance of a wire or other conductor is the *material* of which the conductor is made. As we noted earlier in this lesson, the "swinging" electrons in some materials are more numerous or more loosely bound than in others, and for this reason materials differ in their ability to carry current. The more easily current can flow through a material, the lower is its resistance.

The degree to which a material opposes the flow of current is called its *resistivity*. Note that resistivity, unlike resistance, does not depend on the dimensions of the conductor – it is a property of the material only. It is expressed as the resistance in ohms of some standard size and shape. For wire, resistivity is usually expressed in *ohms per circular mil-foot.*

A circular mil is a unit of *area*. It is the area of a circle having a diameter of 0.001 inch. A circular mil-foot of wire is a piece of wire one foot long, whose area is one circular mil (abbreviated C.M.), thus:

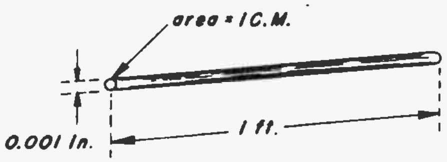

Fig. 16-9

We can now put these three facts together into a single formula that expresses the resistance of any conductor in terms of its *resistivity, length* and cross-sectional *area*, thus:

$$R = p\frac{l}{A}$$

where l and A represent the length and area, and resistivity is represented by the letter p. If p is in ohms per circular mil-foot, then l must be in feet, and A in circular mils.

Now let's see how we would use this formula to find the resistance of a piece of copper wire 66 in. long and 0.008 in. in diameter. Tables are available, showing the resistivity of various materials commonly used. A condensed version of such a table is given in Table A. We find that the resistivity of copper is given as 10.4 ohms per C.M.-ft. This is our value of p in the formula. Remembering that the length must be in *feet*, we convert 66 in. to feet by dividing by 12, getting 5.5 ft. What about A? Recall that a circular mil is the area of a circle 0.001 in. in diameter. If we doubled the diameter, the area would be multiplied by four. If we multiplied the diameter by 8, the area would be multiplied by 8 x 8, or 64. So the area of the wire in C.M. is found by squaring (multiplying by itself) the diameter in thousandths of an inch. Since 0.008 in. is 8 thousandths of an inch, our value of A is 64 C.M.

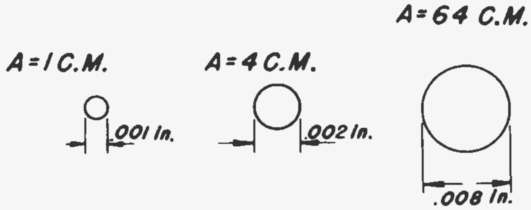

Fig. 16-10

Putting these values into the formula, and performing the multiplication and division indicated, we get

$$R = p\frac{l}{A} = \frac{10.4 \times 5.5}{64} = .895 \text{ ohm}$$

TABLE A

Conducting Material	Resistivity (in ohms per C.M.-feet)	Temperature Coefficient of Resistance (per °C)
Silver	9.8	0.0038
Copper	10.4	0.00382
Aluminum	17.0	0.0039
Tungsten	34.0	0.0045
Nickel	46.0	0.006
Steel (soft)	95.1	0.005
Lead	130	0.0039
Steel (hard)	275	0.0016
Nichrome	600	0.0004
Carbon	2600 to 7500	-0.0003

Temperature Coefficient of Resistance. – Up to now, we have purposely ignored one other factor that can materially affect the resistance of a conductor. That is its *temperature*. The resistance of most materials increases as the material gets hotter. We need not bother with the explanation of why this is so. Under normal conditions, this variation of resistance with temperature is of negligible importance. But if a resistor in a TV receiver gets *overheated* (as it can do when something goes wrong), its resistance can change so much as to interfere seriously with the proper operation of the circuit.

The relation between resistance and temperature is given by this formula:

$$R = R_1 (1 + aT)$$

R_1 is the resistance at ordinary room temperatures, usually taken as 20° Centigrade (same as 68° Fahrenheit)*. *T* is the temperature *change* – that is, the difference between the temperature under consideration and 20° C. *a* is a quantity called the *temperature coefficient of resistance.* It is a property of the material of the conductor, and tells by what fraction the resistivity of the material increases with each Centigrade degree rise in temperature above 20°. Values of *a* for various materials are also available in tables. A few of them are listed in Table A. Finally, *R* is the new resistance of the conductor, when its temperature is *T* degrees Centigrade more than 20°.

It is instructive to note that the last material listed in Table A – carbon – has a minus sign in front of its temperature coefficient. This means that it is one of the very few materials whose resistance *decreases* as it gets hotter.

Now let's try a sample problem in change of resistance with temperature. Suppose we have a piece of copper wire whose resistance is measured at 21 ohms at room temperature (68° F). We want to find its resistance at 140° F. The net change in temperature is 140 – 68, or 72° F. This must be expressed in Centigrade degrees, however, since that is the way our table of temperature coefficients is set up. A temperature change of 72 Fahrenheit degrees is 40 Centigrade degrees, so 40 is the value of *T* in the formula. For a value of *a*, we look in the table, and find that for copper, *a* is 0.00382. Putting these values into the formula, and doing the arithmetic, we get

$$\begin{aligned} R = R_1 (1 + aT) &= 21 (1 + 0.00382 \times 40) \\ &= 21 \times 1.153 = 24.2 \text{ ohms} \end{aligned}$$

Note that if we wanted the resistance 40 Centigrade degrees *below* room temperature, the value of *T* would be negative, and the answer would then come out to be 17.8 ohms.

Also, if the problem involved an increase in temperature of a *carbon* resistor, the value of *a* would be negative, and again we would have to *subtract* the product *aT* from 1 to get the right answer.

Energy Dissipated in a Resistor. – Recall that we stated that it requires an expenditure of energy to move a charge against an electric field. Conversely, if a quantity of charge is moved *by* a field, then the field expends energy. This is what happens when electrons move through a solid conductor. The energy of the field is expended in moving them. This is another way of saying that when current flows in a wire, the energy of the emf source is used up in overcoming the resistance of the wire.

Now we know that energy cannot be destroyed. So what happens to this energy? The answer is that it is converted into *heat.* We shall have more to say about this heat when we discuss practical resistors. For now, let's concentrate on how this energy is measured.

Electrical Power and Energy. Ordinarily, we are more interested in the *rate* of consumption of energy than in the total amount used. The rate of using energy is called *power.* Power, in other words, is *energy per unit time.* The unit of electrical power is the *watt.* This is the rate of energy consumption of one ohm of resistance, through which one ampere of current flows. The power consumed in any resistance is given by the relation:

$$P = I^2 R$$

If *I* is in amperes and *R* in ohms, then the power, *P*, comes out in watts. Notice that *I* is the *current through the resistance R.* If we knew that a certain circuit had a resistance of 100 ohms, and carried a current of 0.5 ampere, the power consumption of the circuit would be

$$\begin{aligned} P = I^2 R = (0.5)^2 \times 100 &= 0.5 \times 0.5 \times 100 \\ &= 25 \text{ watts} \end{aligned}$$

A watt is a rather small unit to a power engineer, who usually expresses power in *kilowatts.* A kilowatt is 1000 watts. But many electronic circuits take extremely small power, and we may sometimes find it more convenient to express power in *milliwatts.* A milliwatt (as you should be able to figure out now) is 0.001 watt.

---

*Temperatures can be easily converted from Fahrenheit to Centigrade or back again by the use of these two formulas:

$$F = \frac{9}{5} C + 32 \qquad C = \frac{5}{9} (F - 32)$$

If you are interested only in the temperature *change*, then use:

$$\Delta F = \frac{9}{5} \Delta C \quad \text{or} \quad \Delta C = \frac{5}{9} \Delta F$$

But suppose we didn't know the resistance, but did know both the current and the voltage. We could, of course, calculate the resistance by Ohm's Law. But an easier method would be to use the relation:

$$P = EI$$

This expression, as a matter of fact, can be easily derived from the first by substituting E/I for the R, and then cancelling one of the I's. By a similar substitution, we could get:

$$P = \frac{E^2}{R}$$

If we were interested in the total amount of energy used in a given time (as we would be if we were selling electrical energy, as the light companies do), we could compute it by multiplying the rate of power consumption, in watts, by the time over which the current was turned on, thus:

$$W = Pt$$

Note that the symbol W stands for *energy* (what the physicists call *work*), not "watts". The watt is a unit of power, for which the usual letter symbol is P.

If we expressed the time, t, in hours, the energy would come out in *watt-hours*. If we expressed it in seconds, the answer would be in *watt-seconds*. (A watt-second is also called a *joule*, but we will have little use for this unit.)

Let's try a sample problem. Four 60-watt lamps are lit 8 hours per day for 20 days. How many kilowatt-hours of energy are used? Again, we find the values to insert in the appropriate formula. Since the power consumption of all four lamps is four times that of one lamp, the value of P is 4 x 60 = 240 watts. The time is 8 hr/day times 20 days, or 160 hours. So now we have

$$W = Pt = 240 \times 160 = 38{,}400 \text{ watt-hours}$$

To get the answer in *kilowatt-hours*, we simply divide by 1000, and get 38.4 kilowatt-hours as a final result.

Purpose of Resistors in TV Receivers. – Resistance in a circuit is sometimes undesirable but unavoidable. Often, however, resistance is purposely introduced in a receiver circuit for one of several purposes. Resistors may be used to limit the current flowing in a part of the circuit. Such resistors may be variable – that is, their resistance value can be changed continuously over some range by turning a knob. These give a continuous control over the current flowing in the circuit.

One of the commonest uses of resistors is to place certain points in the circuit – such as vacuum tube electrodes – at a desired potential with respect to some other point. Just how resistors accomplish this will be more apparent after our discussion of series circuits in Sec. 16-5. A similar purpose is accomplished by a variation of a series circuit known as a voltage divider. A variable voltage divider is called a potentiometer.

Television receivers contain a considerable number of "time constant" circuits, in which it is required that a condenser be charged at a certain rate. Resistors are inserted in such circuits to control the time it takes to charge the condenser. Such circuits are used to produce special wave shapes required in the deflection circuits, to separate the horizontal from the vertical sync pulses, and for many other purposes.

The commercial resistors used in TV receivers are of several forms. Mostly, they consist of small cylinders, 1/2 inch to several inches long, made of compressed carbon. Others are made of high resistivity wire, wound on a ceramic form, and often covered with ceramic material. Both kinds are provided with two wires protruding from the ends, to which connections may be made. A group of typical resistors is shown in Fig. 16-11.

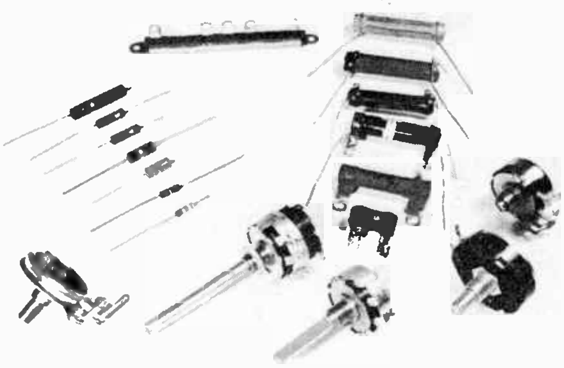

Fig. 16-11

We shall have more to say later on about the physical structure of the resistors used in

TV receivers. They all have one important characteristic in common, however. That is that *there is a practical limit to the amount of power any resistor will dissipate.*

Power Ratings of Practical Resistors. – We stated a few paragraphs back that the energy used to push the electrons through a resistor is converted into heat. Let us now examine what happens to that heat. If the heat energy remains in the resistor, its temperature will rise. This in turn can have two effects, both bad. One is that the value of the resistance will change, due to the temperature change. Secondly, if the temperature gets very high, the material of the resistor will be permanently damaged. The resistor may even "burn out" and break the circuit. The longer the current flows, the more energy is converted to heat, and the higher the temperature gets – unless we somehow get rid of the heat as it is generated.

Some of the heat is removed from the resistor by the air in contact with it. Some is radiated to nearby objects, just as a stove radiates heat. In both cases, the amount of heat that can be got rid of in a given length of time depends largely on the size and nature of the surface of the resistor. A small resistor will get rid of less heat than a large one, and will therefore experience a greater rise in temperature, for a given input of electrical power. Also, a resistor will get rid of its heat more rapidly if it is out in the open than if it is in a confined space, as many resistors in TV receivers are.

Practical resistors are therefore *rated* for the *maximum power they can be safely expected to dissipate.* Thus, we might refer to a 500-ohm, 1-watt resistor, and compare it with a 500 ohm, 1/2-watt resistor. The 1-watt resistor will probably be bigger than the other. The resistance of each is the same – 500 ohms. But one can be operated without damage at higher power than the other.

Maximum Safe Current and Voltage. We can calculate from the power rating how much current we can safely pass through the resistor, or how much voltage we can safely put across it. We have two expressions for power – one in terms of resistance and current, and one in terms of resistance and voltage:

$$P = I^2R, \text{ and } P = \frac{E^2}{R}$$

If we solve the expressions for the current and voltage respectively, we get:

$$I = \sqrt{\frac{P}{R}} \quad \text{and} \quad E = \sqrt{PR}$$

If we insert in these expressions the values of power and resistance of the two resistors just discussed, we find that the maximum safe current is about 45 ma. for the 1-watt resistor, and 31.5 ma. for the 1/2-watt resistor. The maximum safe voltages are about 22 volts and 16 volts respectively. Notice that if you want to double the maximum current through a resistor, it is *not* sufficient to select one having twice the power rating.

It may be of interest to note that when we speak of a *60-watt lamp,* the meaning of this designation is not the same as that of a power rating for a resistor. The power rating of a lamp indicates the amount of power taken by the lamp when it is operated *under normal conditions* – that is, with a specified voltage (usually 110 to 120 volts) across it. Resistor power ratings, however, indicate *maximum safe* power, not normal power.

SERIES CIRCUITS

16-5. So far we have considered only one resistor at a time, connected to a source of emf as shown in Fig. 16-7. Now we shall put several resistors together, and discuss the relations that exist.

In general, there are two simple ways of connecting two or more resistors. Connected end to end, they form a *series circuit,* as shown in Fig. 16-12 (a), below. The voltage would be applied

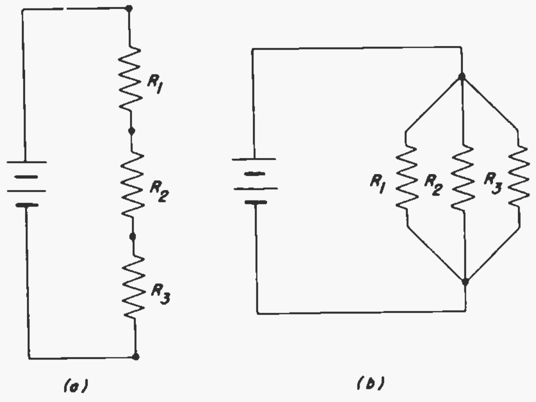

Fig. 16-12

to the free ends. If we connect them side by side, with both sets of ends of the several resistors together, and apply a voltage to the connected ends as shown in Fig. 16-12 (b), we would have a *parallel circuit.*

In this section, we will be concerned with series circuits.

Total Resistance in Series. – Suppose we had three resistors – 20 ohms, 30 ohms and 50 ohms, connected in series across a voltage source of 50 volts, thus:

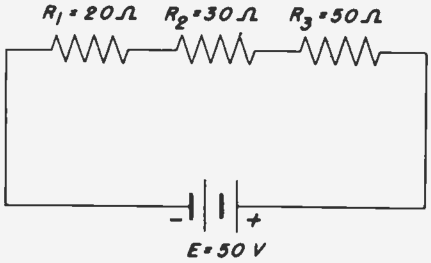

Fig. 16-13

(The symbol Ω is the Greek capital letter *omega*, and is often used in schematic diagrams as an abbreviation for "ohms".)

Among the things we don't know, and want to find out, are (1) the current through the battery and each resistor, (2) the voltage across each resistor, (3) the total resistance of the circuit, (4) the total power taken by the circuit, and (5) the power dissipated by each resistor. All of these things can be found from the known facts. Let us start with the total resistance.

The resistance of the circuit is simply the sum of the individual resistances in series. If we represent this total resistance by R_o, we can express the relationship thus:

$$R_o = R_1 + R_2 + \ldots$$

The dots indicate that we add the values of as many resistors as are connected in series, whether it be three or a hundred. For the circuit in our example, we would find the total resistance thus:

$$\begin{aligned} R_o &= R_1 + R_2 + R_3 \\ &= 20 + 30 + 50 = 100 \text{ ohms} \end{aligned}$$

The circuit as a whole will behave exactly as though we substituted a single 100-ohm resistor for the three resistors in series. So we can now find the current from Ohm's Law:

$$I = \frac{E}{R} = \frac{50}{100} = 0.5 \text{ ampere}$$

This is the current that flows in the battery, as well as in each of the series resistors. *In a series circuit, the current is the same in all parts of the circuit.* You will realize that this must be so if you visualize the electrons moving through the circuit. If the current were different in two connected resistors, the electrons would be piling up in one of them, faster than they were removed from the other end. If this were so, the potential difference across the resistor in question would change, and this is contrary to Ohm's Law.

Voltage Division. – One of the expressions for Ohm's Law was:

$$E = IR$$

This states that the *voltage across any resistor* is equal, in volts, to the resistance of the resistor, in ohms, multiplied by the current through it, in amperes. Let us apply this to *one* of the resistors in our example, say R_1:

$$E_1 = IR_1 = 0.5 \times 20 = 10 \text{ volts}$$

Notice that we have modified the general expression by adding the subscript $_1$ to both E and R. This is to indicate that it is R_1 and the voltage across it that we are dealing with, not the applied voltage, E. There is no need for a subscript on the I, since there is only one current in the circuit.

In the same way, we can find the voltages across R_2 and R_3. They are 15 and 25 volts respectively. Now we can indicate the results of these calculations on our circuit diagram:

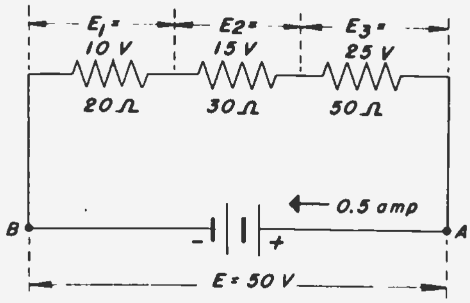

Fig. 16-14

This tells us an extremely important principle. Notice that *the sum of the voltages across the individual series resistors is exactly equal to the applied voltage*. This is *always* true of any closed circuit. Again, common sense tells us that this must be so. Notice that the potential of point *B*, at the negative terminal of the battery, is set by the battery at 50 volts below point *A*. This fact is not altered by the path we take in tracing from *A* to *B*. Whether we go through the battery, or around the circuit through the resistors, the total potential difference must still be 50 volts.

Looking at it another way, we can start at any point in the circuit, as *A*, and go around the circuit in either direction. Going counterclockwise from A, we go through voltage *drops* totalling 50 volts across the resistors. This brings us to *B*. Continuing in the same direction, we go through a *rise* of 50 volts, bringing us back to point *A*. Now a rise in the negative of a drop, so we subtract it from the 50 volts drop, and get an answer of *zero*. So another way of stating what we have already said is that *the sum of the voltage drops around a closed circuit is zero.*

Fig. 16-14 tells us another important principle: *resistors in series divide the voltage across the series combination in the same proportion as the included resistances.* Stated in algebraic shorthand, this principle can be generalized thus:

$$\frac{E}{R_0} = \frac{E_1}{R_1} = \frac{E_2}{R_2} = \frac{E_3}{R_3}$$

From this it follows that

$$\frac{E}{E_1} = \frac{R_0}{R_1}, \quad \frac{E}{E_2} = \frac{R_0}{R_2}, \quad \text{etc.}$$

This principle shows how we can *tap off* any desired fraction of the voltage of an available source of emf. Thus, if we wanted to obtain a voltage of 5 volts – 1/10 of the applied 50 volts – we could get it across any series resistor whose resistance was 1/10 of the total resistance in series. In this case, we could substitute two 10-ohm resistors for R_1. The total resistance would still be 100 ohms, so 5 volts would appear across either 10-ohm resistor.

Voltage Drop. – Let us return for a moment to our imaginary excursion from point *A* to point *B*, in Fig. 16-14. We said that point *B* has a potential 50 volts below that of *A*. In going from *A* to *B*, therefore, we go through a *potential drop* or *voltage drop* of 50 volts, regardless of which way we go around the circuit.

Now suppose we start from point *A*, and go through the resistors. As we go through the 50-ohm resistor, R_3, we go through a *voltage drop* of 25 volts – the voltage across R_3. Proceeding to the left end of R_2, we go through an additional voltage drop of 15 volts. And continuing to point *B*, through R_1 we pass through a final voltage drop of 10 volts.

Now note this carefully: *the only reason these separate voltage drops exist is that a current is flowing through the resistors.* If we were to disconnect R_1 from point *B*, the current would stop, and there would be no voltage drop across *any* of the resistors. Both ends of all of them would be at the same potential as point *A*.

If we were to proceed through the resistors from *B* to *A*, we would refer to the potential changes across the several resistors as *voltage rises*. Note that the voltage drop is always in the direction from the most positive point in the circuit to the most negative. It is also worth noting that the direction of voltage drops is opposite to the direction in which the electrons flow. *Electrons always move toward the more positive point – that is, the point of higher potential.* Thus they may be thought of as flowing "uphill," so to speak.

Ground. – In the foregoing discussion, we have referred to the voltage drops across resistors, and to the potential difference between two points. But note that we never stated that any point was at a certain potential – period. Our voltages were all relative. But suppose we pick some one point in the circuit, and say arbitrarily that we will call the potential of this point zero. We will call this point *ground*, and we can then designate the potentials of all other points in the circuit with reference to this ground point. In many practical circuits, the ground point is actually connected electrically to the earth. But whether it is so connected or not, it can still be used as a convenient reference from which to measure voltages. In television receivers, the chassis – the metal base on which all the components are mounted – is regarded as the ground point.

Let us "ground" point B in our sample circuit, and measure the voltages between this and various other points in the circuit.

The graduated parallel lines shown are the conventional symbol for ground – real or merely

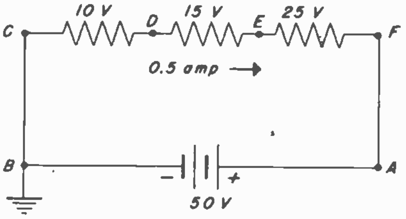

Fig. 16-15

for reference. If we were now to connect one lead of a voltmeter to point B, and touch the other lead consecutively to the other points designated, we would measure: at C, zero; at D, 10 volts; at E 25 volts; at F, 50 volts; and at A, 50 volts. These readings would be the *potential differences*, or *voltage differences*, between the designated points and the ground point, B. If we refer to the voltage of point D as 10 volts, we mean 10 volts above the ground, or reference point.

Now suppose we decide we want to "ground" point D instead of B. Again measuring voltages with respect to ground, we would find that some were above ground, some below, thus:

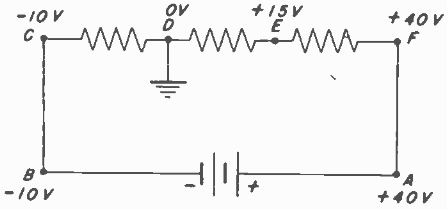

Fig. 16-16

We can always ground any one point in a circuit without affecting the operation of the circuit. All we do when we change the ground point is to change the reference point from which we measure voltage drops and rises. However, if we grounded *two* points of different potential, there might be fireworks. At the very least, one or more resistors would be short circuited, and the operation of the circuit would be changed.

For instance, if points B and D were both grounded, there would be no voltage drop across the 20 ohm resistor, so no current would flow in it. The applied voltage of 50 volts would be across a total of only 80 ohms, so the current would be 0.625 amp. instead of 0.5 amp. The potentials of points A and F would be 50 volts, and of point E, 18.75 volts, all above ground.

"High" Voltages. – This is a good place to mention an accepted terminology that may seem confusing or contradictory. In television receiver circuits, there are points whose potential is 1000 volts or more *below* the chassis ground – that is, 1000 volts negative. By our definitions, we would say that these were points of *low potential*. Yet if you touched one of these points, and the chassis at the same time, we'd have a hard time convincing you that you'd gotten across a *low voltage*. The words "high" and "low" are commonly applied to voltages in two different meanings. In one sense they mean "positive" or "negative" with respect to some reference point. In the other sense they mean "large" or "small", regardless of polarity. So watch out for this contradiction, and don't assume it's safe to touch a bare contact just because its potential is 1000 volts below chassis ground instead of above.

Voltage Divider Circuit. – The principle of voltage division just explained is the basis for an extremely important group of circuits used in TV receivers. They are called *voltage divider circuits*. Such circuits can be used wherever it is desired to place several points in the circuit at certain desired potentials with respect to each other. For example, they are often used to provide the required voltages on the electrodes of the electron gun in a kinescope. The same principle is involved in many vacuum tube circuits, in which the grid of a tube may be placed at a specified potential below the cathode, by the method known as "cathode bias".

Sometimes the voltage divider circuit consists of *one* resistor, with taps connected to several points along its length, instead of several separate resistors, thus:

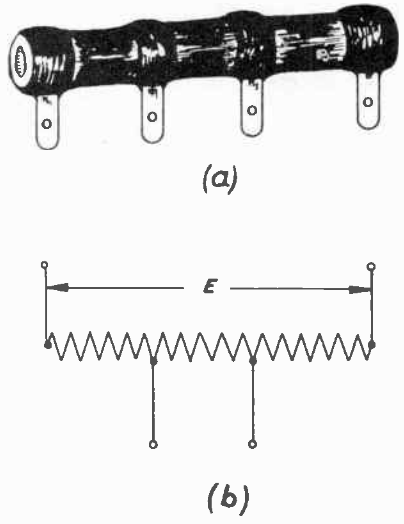

(a)

(b)

Fig. 16-17

Fig. 16-17 (a) shows what such a tapped resistor looks like, and (b) shows how it is represented in a schematic diagram. Between any two taps, a certain fraction of the total resistance is included. If a voltage source is connected to the ends of the entire resistor, a current of course flows. This current causes a voltage drop across that part of the resistor, proportional to its resistance. But if the resistor has a uniform cross-section, the resistances included between points along its length will be proportional to the distance between them. Thus the voltage drop is proportional to the length included – so many *volts per inch.*

For example, suppose we have such a resistor 6 in. long., and we apply 1200 volts across its ends. If we connect a tap 1 inch from the positive end, it will be at a potential 200 volts below the positive end. Two inches from the end, we can obtain a voltage drop of 400 volts, and so on.

Power Division. – Just as series resistors divide the applied voltage proportionally to the resistances, so they divide the total power in the same way. We can calculate the total power taken by the circuit, and the power in each resistor, most easily from the relation $P = I^2R$, thus:

$$\begin{aligned} P_1 &= I^2R_1 = (0.5)^2 \times 20 = 5 \text{ watts} \\ P_2 &= I^2R_2 = (0.5)^2 \times 30 = 7.5 \text{ watts} \\ P_3 &= I^2R_3 = (0.5)^2 \times 50 = \underline{12.5 \text{ watts}} \\ P_o &= I^2R_o = (0.5)^2 \times 100 = 25 \text{ watts} \end{aligned}$$

Note that the total power is the simple sum of the powers consumed by the individual resistors. This total is the power consumed by the entire circuit, and is of course identical with the power delivered by the generator.

We also had two expressions for power involving the voltage. Note that if either of these expressions is used, *the voltage must be the voltage across the resistor in question.* (The *applied* voltage can be used only with the *total* resistance of the circuit.) Thus we could find P_1 like this:

$$P_1 = E_1I = 10 \times 0.5 = 5 \text{ watts}$$

Circuit Solutions. – With the foregoing calculation of the power in each resistor, we have completed the "solution" of the circuit we started with, and have found all of the quantities we were looking for. We started, you will recall, by knowing the applied voltage and the values of three resistors in series.

In many practical cases, we may not know all the resistance values. Or we may know the current and not the voltage. Or we may know the resistance values and the total power, or one of the voltage drops. In any of these cases, we can still find the unknown quantities by applying in proper sequence the relations explained in this section. One or two examples will make the method clear.

We have a series circuit of three known resistors like this:

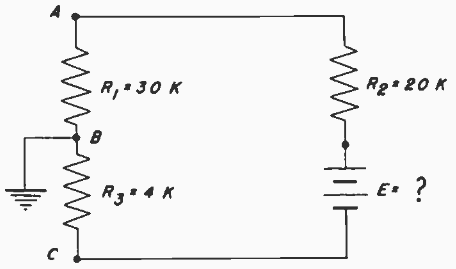

Fig. 16-18

The battery terminals are inaccessible, but we have measured the voltage from point *A* to ground and found it to be 210 volts. It is desired to find the battery voltage, E.

First, we can find the current. The voltage of point *A* is of course the voltage across R_1. So the current is:

$$I = \frac{E_1}{R_1} = \frac{210}{30{,}000} = 0.007 \text{ ampere} = 7 \text{ ma.}$$

The battery voltage is equal to this current, multiplied by the total resistance. So:

$$\begin{aligned} R_o &= R_1 + R_2 + R_3 = 30{,}000 + 20{,}000 + 4{,}000 \\ &= 54{,}000 \text{ ohms} \end{aligned}$$

$$E = IR_o = 0.007 \times 54{,}000 = 378 \text{ volts}$$

Now suppose we want to modify the circuit, so as to obtain a voltage of 10.5 volts negative with respect to ground. How do we do it? Obviously such a point, if it exists, must be somewhere between point *B* and the negative battery terminal, point *C*. The potential of point *C* is found from:

$$E_3 = IR_3 = 0.007 \times 4{,}000 = 28 \text{ volts}$$

Since point *C* is at -28 volts, there must be a point between *C* and *B* with the required potential. Let's call this point *D*. The resistance between *D* and *B* must be

$$R = \frac{10.5}{0.007} = 1{,}500 \text{ ohms}$$

So all we have to do is to substitute two resistors totalling 4000 ohms for R_3, placing 1500 ohms between *B* and *D*, and 2500 ohms between *D* and *C*, thus:

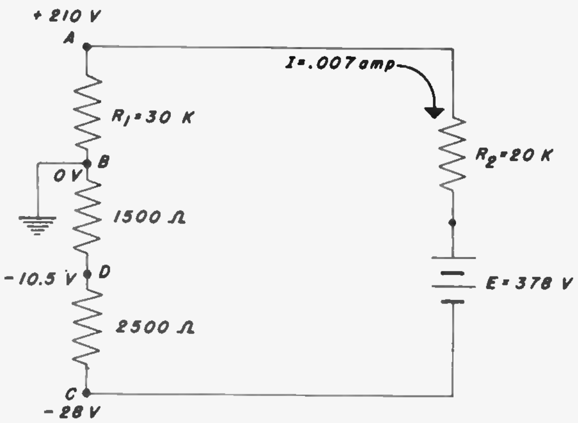

Fig. 16-19

Note that we had to keep the total resistance the same. If we had left out the 2500 ohms, the total resistance would have been less, and the current greater. Then the drop across the 1500 ohms would have been a little more than the desired 10.5 volts.

PARALLEL CIRCUITS

16-6. A typical parallel circuit was shown in Fig. 16-12 (b). For purposes of explaining the behavior of such a circuit, however, let us start with this simpler circuit:

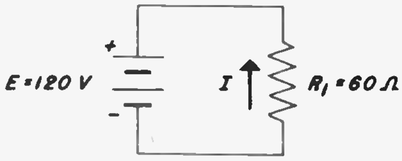

Fig. 16-20

We know now that the current in the 60-ohm resistor will be 2 amperes. Now suppose we connect another resistor of 120 ohms across the ends of R_1, like this:

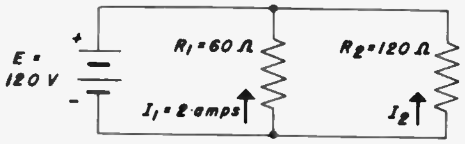

Fig. 16-21

Notice that the source is still connected across R_1. Therefore the *same 2 amperes will continue to flow in it.* However, E is also connected across R_2, and Ohm's Law tells us that the current through R_2 must be 1 ampere. The electrons of *both* currents must merge in the wire connecting R_1 to the battery. Thus the current in this wire and in the battery, is the *sum of the currents in* R_1 *and* R_2. These currents are called the *branch currents*, and their sum is the *line current.* In this case the line current is 2 + 1 = 3 amperes.

We could connect any number of resistors *in parallel* with R_1 and R_2 without in any way affecting the original branch currents. By so doing, we would, however, draw more total current from the battery. This assumes, of course, that the applied voltage E remains unchanged.

Equivalent Resistance of a Parallel Circuit. – Unlike the series circuit, we cannot speak of the "total resistance" of a parallel circuit. The two parallel resistors of the example could, however, be replaced by a single resistor that would take the same current from the battery. This would be called the *equivalent resistance* of the circuit. We can find its value very easily by Ohm's Law from the information we already know:

$$R_o = \frac{E}{I_o} = \frac{120}{3} = 40 \text{ ohms}$$

We see immediately that the equivalent resistance is less than either branch resistance. So we obviously can't find it just be adding the branch resistances. We can, however, compute the equivalent resistance of any parallel circuit, knowing only the branch resistances, thus:

$$R_o = \frac{1}{\frac{1}{R_1} + \frac{1}{R_2} + \ldots}$$

In words, *the equivalent resistance of a parallel circuit is the reciprocal of the sum of the re-*

ciprocals of the branch resistances. Applying this to our example, we would get:

$$R_o = \frac{1}{\frac{1}{60}+\frac{1}{120}} = \frac{1}{0.0167 + 0.0083}$$

$$= \frac{1}{0.0250} = 40 \text{ ohms}$$

The arithmetic is simplified somewhat for a 2-branch circuit by noting that the equivalent resistance can be expressed as

$$R_o = \frac{R_1 R_2}{R_1 + R_2} = \frac{R_1}{1 + \frac{R_1}{R_2}}$$

and for a 3-branch circuit as

$$R_o = \frac{R_1}{1 + \frac{R_1}{R_2} + \frac{R_1}{R_3}}$$

We would usually be dealing with parallel circuits in which the branch resistances were of the same order of magnitude. When this is the case, the last two expressions will enable us to avoid those very small fractions, and consequent troubles with misplaced decimal points. Try it and see.

Current Division. – Referring back to Fig. 16-21, we can note that when we connected a larger resistor in parallel with the 60 ohms, the larger resistor took a smaller current. Redrawing the circuit diagram, with the current values, we have:

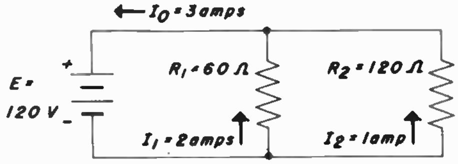

Fig. 16-22

Examining this diagram more closely, we find out that the resistor having *twice the resistance* takes *half as much current.* Generalizing this fact, we can state: *The branch currents in a parallel circuit are in inverse ratio to the branch resistances.* Stated symbolically, this means that

$$\frac{I_1}{I_2} = \frac{R_2}{R_1}$$

Knowing this relationship, we can find either branch current of a parallel circuit, if we know the other branch current and the resistances of both branches. Conversely, if we know both branch currents and one resistance, we can find the other resistance.

Again referring to Fig. 16-22, we can note the relation of the branch currents to the line current, I_o. The branch having 2/3 the total resistance (total, not equivalent) takes 1/3 of the total current, and vice versa. We can most easily relate this fact to the *equivalent* resistance of the circuit as follows.

The voltage drop across R_1 is I_1R_1 (applying Ohm's Law). The drop across R_2 is I_2R_2. Also, the voltage drop across the circuit – that is, across the equivalent resistance – is I_oR_o. But *these are all the same voltage – E.* So we can write them equal to each other:

$$I_1R_1 = I_2R_2 = I_oR_o$$

We can now take any two of these expressions, and rearrange them like this:

$$I_1 = I_o\frac{R_o}{R_1} \qquad \text{and} \qquad I_2 = I_o\frac{R_o}{R_2}$$

This gives us expressions for either branch current in terms of the line current, the branch resistance and the circuit equivalent resistance. We can state this relationship in words like this: *A parallel circuit divides the line current inversely as the resistances through which the line and branch currents flow.*

Finally, by noting that

$$R_o = \frac{R_1R_2}{R_1 + R_2}$$

we can substitute this in the expressions for the branch currents, cancel out one of the branch resistances, and get:

$$I_1 = I_o\frac{R_2}{R_1 + R_2} \qquad \text{and} \qquad I_2 = I_o\frac{R_1}{R_1 + R_2}$$

This gives us expressions for the branch currents in terms of the line current and branch resistances.

Circuit Solutions. – Before we try out the relations just discussed, we might well point out why it's a good idea for you to be able to solve numerical problems based on them. You will probably never have to "solve" a circuit in order to fix a television receiver. But it is important that you acquire a feeling for how circuits behave. Statements in words or symbols, such as we have just presented, don't mean much until you put actual numbers to work with them, and see for yourself how the relations work out. If you do that, then the principle involved becomes a part of your thinking whenever you encounter a circuit of a particular configuration, and you don't have to stop and wonder what could possibly cause the circuit to be upset in a particular way.

So let's try a sample problem. We have a circuit of three parallel branches, in which we know the three resistances and the line current, thus:

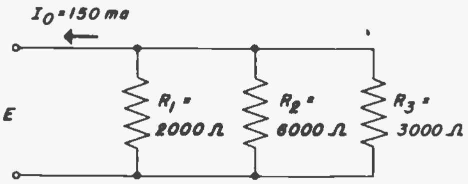

Fig. 16-23

We want to find the current in each branch, and the voltage across the circuit. First, we must find the equivalent resistance of the circuit. One way to do this is:

$$R_o = \frac{R_1}{1 + \frac{R_1}{R_2} + \frac{R_1}{R_3}} = \frac{2000}{1 + \frac{2000}{6000} + \frac{2000}{3000}} =$$

$$\frac{2000}{1 + \frac{1}{3} + \frac{2}{3}} = \frac{2000}{2} = 1000 \text{ ohms}$$

Alternatively, we can find the equivalent resistance of *two* of the branches, and then use this value with the third resistance to find the equivalent resistance of the circuit, like this:

$$R_{1-2} = \frac{R_1 R_2}{R_1 + R_2} = \frac{2000 \times 6000}{2000 + 6000} = 1500 \text{ ohms}$$

$$R_o = \frac{R_{1-2} R_3}{R_{1-2} + R_3} = \frac{1500 \times 3000}{1500 + 3000} = 1000 \text{ ohms}$$

We can now find all of the branch currents, thus:

$$I_1 = I_o \frac{R_o}{R_1} = 150 \text{ ma.} \times \frac{1000}{2000} = 75 \text{ ma.}$$

$$I_2 = I_o \frac{R_o}{R_2} = 150 \text{ ma.} \times \frac{1000}{6000} = 25 \text{ ma.}$$

$$I_3 = I_o \frac{R_o}{R_3} = 150 \text{ ma.} \times \frac{1000}{3000} = 50 \text{ ma.}$$

Finally, we can find the voltage from any branch current and the resistance through which it flows:

$$E = I_1 R_1 = 0.075 \times 2000 = 150 \text{ volts}$$

Alternatively, we could have found the voltage first, and used it to get the branch currents, thus:

$$E = I_o R_o = 0.150 \times 1000 = 150 \text{ volts}$$

$$I_1 = \frac{E}{R_1} = \frac{150}{2000} = 0.075 \text{ amp.} = 75 \text{ ma.}$$

Notice in the foregoing calculations that the quantities involved must be expressed in the right units – volts, amperes and ohms. An exception was the calculation of the branch currents from the line current. Since the ratio of the resistances is a pure number (the units in numerator and denominator cancelling each other), the answer comes out in whatever units are used to express the line current.

Voltages to Ground. – In a simple parallel circuit such as that of our last example, *there are only two points that can be grounded* – the two battery terminals. (Of course, we wouldn't ground both points at once.) The connected ends of the branches are all at the same potential, no matter how many branches the circuit contains. Hence, there is only one voltage to ground that we could measure – the voltage from the ungrounded battery terminal. This voltage appears across the entire circuit, and is identical with the voltage across each of its branches.

Power Division. – A parallel circuit divides the total power directly as the branch currents, and inversely as the branch resistances. Thus the branches with the lowest resistance take the most power.

The power taken by any branch is easily found by using any of the expressions for power we have discussed. We must be careful, however, to use only the resistance of, or current through, the branch in question. Thus, in our last example:

$$P_1 = EI_1 = 150 \times 0.075 = 11.25 \text{ watts}$$

$$P_2 = I_2^2 R_2 = (0.025)^2 \times 6000 = 3.75 \text{ watts}$$

$$P_3 = \frac{E^2}{R_3} = \frac{(150)^2}{3000} = 7.5 \text{ watts}$$

Any of these relationships can be used to find the total power (which will be found to be equal to the sum of the power in the individual branches) thus:

$$P_o = EI_o = 150 \times 0.150 = 22.5 \text{ watts}$$

SERIES-PARALLEL CIRCUITS

16-7. Except in very small parts of a television receiver circuit, we seldom encounter circuits quite as simple as the series and parallel connections we have discussed in the last two sections of this lesson. We will, however, often find combinations of these two kinds of connections in the same circuit. Such circuits are called *series-parallel* circuits. A relatively simple example of such a circuit is like this:

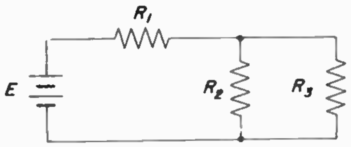

Fig. 16-24

There is nothing new to tell about such a circuit. Its behavior is easily analyzed by the principles already explained, and applied to *parts* of the circuit. For example, let us consider the circuit shown above.

Circuit Solution. – Suppose R_1 is 100 ohms, R_2 and R_3 are 200 ohms each, and E is 50 volts. We want to find the currents through each of the resistors, and the equivalent resistance of the circuit.

First, we can replace the two parallel resistors by their equivalent resistance. Since the branch resistances are equal, we would find their equivalent resistance to be half that of each branch, or 100 ohms. Now let us redraw the circuit, representing the equivalent resistance of the parallel part of the circuit by R_p (Fig. 16-25).

Now we have nothing but a simple series circuit to deal with. The total resistance is

$$R_o = R_1 + R_p = 100 + 100 = 200 \text{ ohms}$$

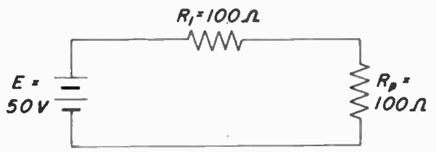

Fig. 16-25

Applying Ohm's Law, we find the total current is 50/200, or 0.25 ampere. This is the current in R_1. But it is also the line current into the parallel circuit. Since the parallel resistors are equal, each will take half the line current. Thus each branch current is 0.125 ampere.

If we are interested in the voltage drops across the individual resistors, we can find them by the same relations we have used before. Thus, the drop across R_1 is

$$E_1 = I_o R_1 = 0.25 \times 100 = 25 \text{ volts}$$

The remaining 25 volts of the battery voltage obviously appears across the parallel part of the circuit. We can now show all these results on our diagram, thus:

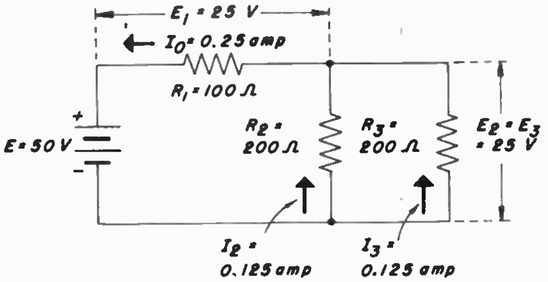

Fig. 16-26

We will often encounter circuits in which there are several resistors in series, the series combination comprising one of several parallel branches. Thus, suppose our circuit of Fig. 16-24 had appeared like this:

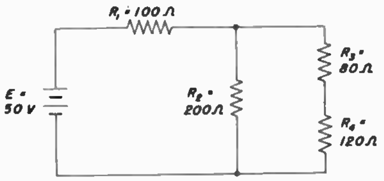

Fig. 16-27

In order to solve the circuit, we would first add R_3 and R_4, to get the total resistance of that branch. Finding it to be 200 ohms, we would then use this value exactly as we explained above, and come out with the same answers. We could get two additional pieces of information – the voltage drops across R_3 and R_4 – thus:

$$E_3 = I_3 R_3 = 0.125 \times 80 = 10 \text{ volts}$$
$$E_4 = I_3 R_4 = 0.125 \times 120 = 15 \text{ volts}$$

Voltages to Ground. – Just as with a simple series circuit, we could ground any one point in the circuit. Suppose we grounded the connection between R_3 and R_4 in Fig. 16-27. By taking account of the voltage drops and rises from this point, you can easily verify that the voltages we would measure between various points and ground would be like this:

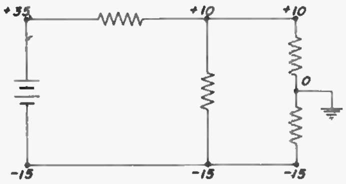

Fig. 16-28

Troubleshooting by Voltage Measurements. – This circuit serves well to illustrate a useful technique of troubleshooting. Suppose the resistor R_2 were somehow broken, so it would conduct no current whatever. How could we determine this by measuring voltages from various points to ground? We can best answer this question by analyzing what would happen to the voltages *if* R_2 were open-circuited. The circuit would now be like this:

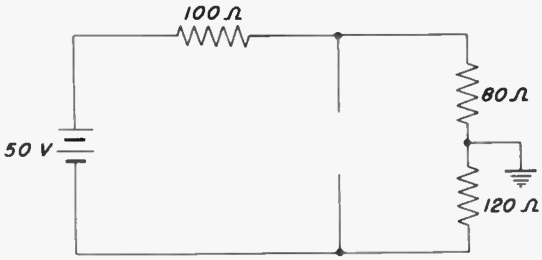

Fig. 16-29

With R_2 out of the circuit, we now have a simple series circuit, with a total resistance of 300 ohms. The current would therefore drop to $50/300 = 0.167$ ampere. Computing the voltage drops, we would find the voltages to ground would now be like this:

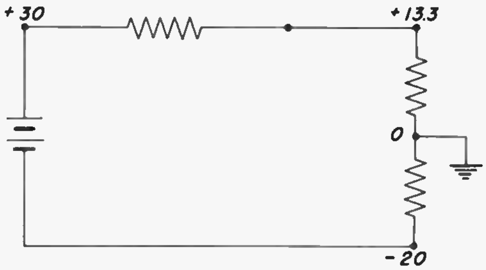

Fig. 16-30

If we were dealing with a circuit such as we started with, and found that the voltages were higher or lower than what they should be in the manner shown in Fig. 16-30, we would suspect an opened resistor. Verifying it then becomes a matter of carefully examining the resistors in the circuit, and their connections.

Generator Resistance. – In our discussions so far, we have assumed that the source of emf – battery or other generator – had no resistance of its own. Actually, all generators have some internal resistance, although in many practical cases it is so small as to be negligible. However, if the generator resistance is appreciable – say, more than 10% of the resistance of the rest of the circuit – its effect must be taken into account.

As long as conditions in the circuit remain unchanged, we can merely consider the generator resistance as part of the circuit. But if we change the circuit, we must remember that the generator resistance is part of it. For example, suppose we have a *parallel circuit* of two resistors of 200 ohms each. It is supplied by a generator whose internal resistance is 100 ohms, thus:

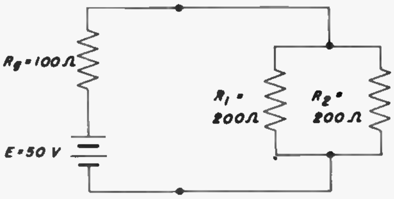

Fig. 16-31

You will recognize this as identical with the circuit of Fig. 16-26. But instead of the *parallel circuit* we started with, we really have a *series-parallel* circuit, when we take the generator resistance into account. Remember that we said of a parallel circuit that adding more branches did not affect the currents in the other branches, *provided the applied voltage remains the same*. The point here is that if the generator has appreciable resistance, the voltage applied to the parallel circuit does *not* remain the same, and all branch currents *are* affected by the addition of more branches (or the removal of branches, as we have seen.)

For example, we have already seen that the voltage across the parallel part of this circuit is 25 volts, and each branch current is 125 ma. (0.125 amp.). Let us see how these quantities would change if we add another 100 ohm resistor in parallel with the first two, thus:

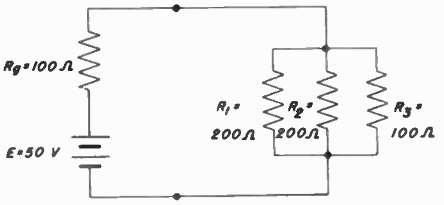

Fig. 16-32

The equivalent resistance of the two 200-ohm resistors was 100 ohms. Adding another 100 ohms in parallel reduces the equivalent resistance of the combination to 50 ohms. This, in series with the generator resistance of 100 ohms, makes a total of 150 ohms. The line current is now 50/150 = 0.333 ampere. The voltage drop across the parallel part of the circuit is 50 × 0.333 = 16.67 volts — *only two-thirds* as much as before. And the current in each of the 200 ohm resistors is 16.67/200 = 0.083 ampere, or 83 ma. — also two-thirds as much as before.

All this adds up to the fact that the resistance of the generator is an integral part of the circuit, and must be taken into account.

Effect of More Than One Voltage Source. — Consider the circuit shown in Fig. 16-33. We shall use it to explain a method that is often useful in understanding circuits containing more than one source of emf.

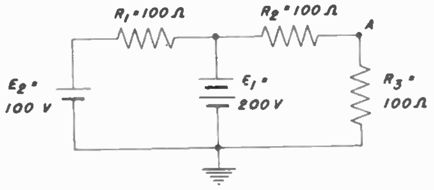

Fig. 16-33

It is assumed that the internal resistances of the generators shown are negligible, so may be considered as zero. The problem is to find the current through each resistor, and the potential of point *A* with respect to ground.

The simplest way to solve the problem is to consider the effect of each generator separately. To do this, we can redraw the circuit, replacing each generator in turn by its internal resistance (in this case, zero). Thus we get two circuits:

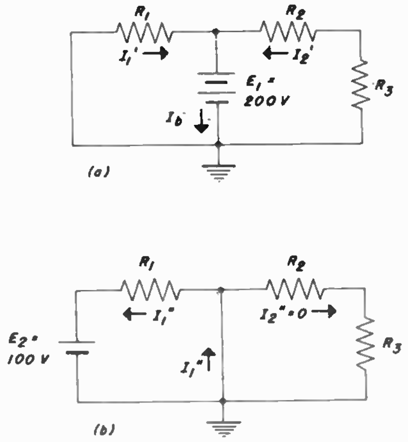

Fig. 16-34

Solving these circuits one at a time, we find that the currents due to E_1 are 2 amperes through R_1, 1 ampere through R_2 and R_3, and 3 amperes through the battery, in the directions shown. The current due to E_2 flows only in R_1, the battery, and the short circuit by which we have replaced E_1, Its value is 100/100 = 1 ampere, in the direction shown. No current due to E_2 flows in R_2 or R_3, which are both shorted out by the zero internal resistance of E_1.

The currents shown as flowing in R_1 are in opposite directions. But we know that only one current can flow in the resistor. This one current is the *difference* between I_1' and I_1'' — 1 ampere, the electrons flowing from left to right, the direction of the larger partial current. The *only* current in R_2 and R_3 is that due to E_1 — also 1 ampere. The voltage drop across R_3 is therefore 1 × 100 = 100 volts. This makes the potential of point *A* in Fig. 16-33 100 volts above ground.

Other Circuit Configurations. — There are other ways of connecting circuit components that do not form simple circuits of the three types we have discussed in this lesson. The solutions of some of these, such as the "bridge circuit", require methods other than the simple analyses explained above. The methods and associated mathematics required are beyond the scope of this review course. However, the vast majority of resistive circuits encountered in TV receivers may be understood by application of the principles we have covered.

D-C METERS

16-8. We have referred several times to "measuring" voltages and currents by the use of suitable measuring instruments, or *meters.* It is the purpose of this section to explain how such meters work, and how they are used.

Most practical meters for measuring voltage, current or resistance make use of a device called the *D'Arsonval meter movement.* Typically, it looks like this:

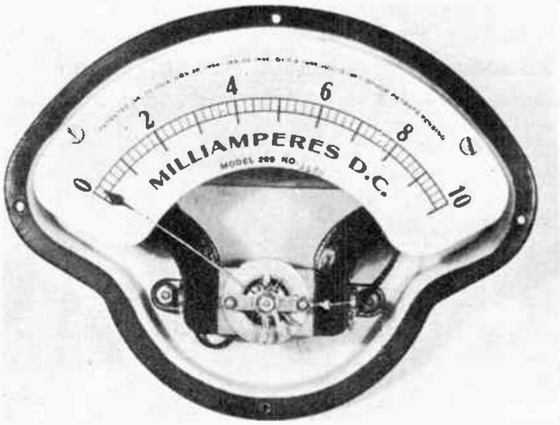

Fig. 16-35

The operation of the D'Arsonval movement, in turn, depends on the fact that when current flows through a wire, a *magnetic field* is established, which can be used to develop the necessary force to move a meter needle. So let's start by examining this basic principle.

Magnetic Field Around A Current-Carrying Conductor. – It was discovered over a century ago that when current flows through a wire, a magnetic needle brought near the wire lines itself up in a definite direction.

The direction of the compass needle is always perpendicular to a line from the compass to the wire – that is, along the circumference of an imaginary circle having the wire passing through its center. If the direction of the current is reversed, the direction of the compass needle also reverses. And when the current stops, the needle goes back to pointing North, regardless of its position near the wire. Like the earlier discoveries about electric charge, this suggested some special kind of *force.* Again we could map the direction of this force at various points around the current-carrying wire, like this:

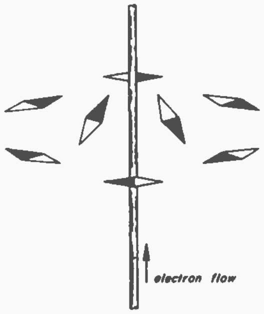

Fig. 16-36

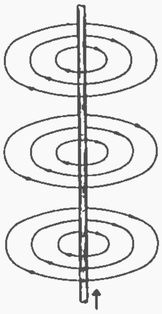

Fig. 16-37

This is very like the map of the electric field that we drew in Fig. 16-3 but with some notable differences: (1) the lines do not terminate on charges, or anywhere else – they are continuous; (2) the force – and therefore the lines with which we represent it – exists only while the electrons in the wire are moving.

We say that in the region around the wire is a *magnetic field,* and refer to the lines as *magnetic field lines,* or *lines of magnetic force,* or *lines of magnetic flux.* The force of the magnetic field differs from that of the electric field in that it cannot be felt by a stationary electron or other charge – only by a *magnetized body* or, as we shall see, by a *moving charge.*

We can greatly strengthen the magnetic field if we form the wire into a coil. Then the forces set up by the current in each little piece of wire are concentrated with the coil, as in Fig. 16-38.

Field of a Permanent Magnet. – If a steel bar were now poked through the coil, and held there

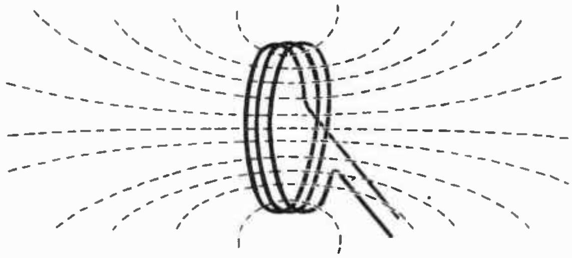

Fig. 16-38

while the current flowed, we could find on removing it that it had become permanently magnetized – that it would now attract the end of the compass needle. There would, in other words, be a permanent magnetic field around the bar, which we could map like this:

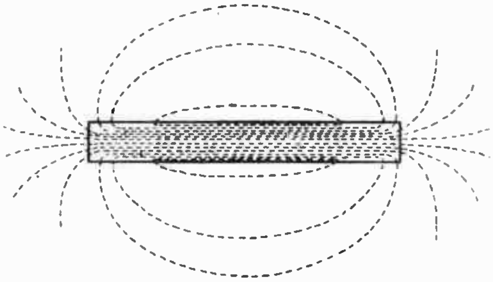

Fig. 16-39

We have shown the field lines as continuing through the solid steel itself, forming closed loops as magnetic field lines do. If we could insert a microscopic compass needle inside the steel bar, we would find that the magnetic force existed there, too. Actually, this is where the force of the field is generated – by the tiny currents constituted by the electrons moving in their orbits around their nuclei. Remember that a current is merely one or more electrons in motion. One electron moving in a circle about its atomic nucleus is just the smallest possible "model" of a current flowing through a coil. Like the coil, its magnetic field is in a direction perpendicular to the plane in which the electron moves. These atom-size coils set up magnetic fields in all materials, but only in certain materials, such as iron and steel, is it possible to line them all up in the same direction so they will add to form a field strong enough to detect.

Force on Current-Carrying Wire. – One more experiment, and we will be ready to understand the D'Arsonval meter movement.

Suppose we bend the bar magnet in the shape of a horseshoe, and between its ends, place a wire through which we can pass a current, thus:

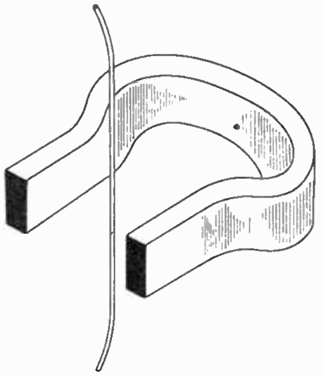

Fig. 16-40

The field lines of the permanent magnet extend straight across the gap between the ends of the bar. Now if we pass a current through the wire an additional field is set up, whose direction is in circles around the wire, thus:

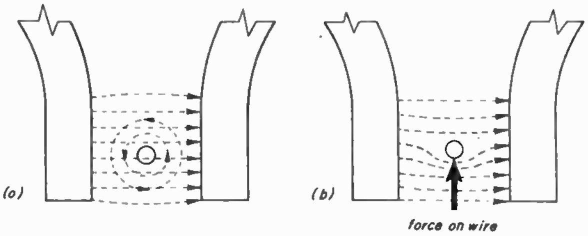

Fig. 16-41

As shown in (a) the two magnetic fields are in opposite directions above the wire, and in the same direction below it. Thus they weaken each other on one side of the wire, and strengthen each other on the opposite side. The net result of the two fields is as shown in (b). Now we come to the crucial point: *the composite field exerts a mechancial force on the wire, pushing it toward the weaker part of the field.* Thus, the wire in our sketch would be pushed *up.*

The D'Arsonval Movement. – The D'Arsonval meter movement is constructed as shown in Fig. 16-42.

A coil of fine wire, *W*, is wound on a light aluminum form. The coil is free to rotate on bearings, which hold it between the ends of a permanent magnet, *M*, of the shape shown. Attached to the coil shaft is a needle *N*, which moves

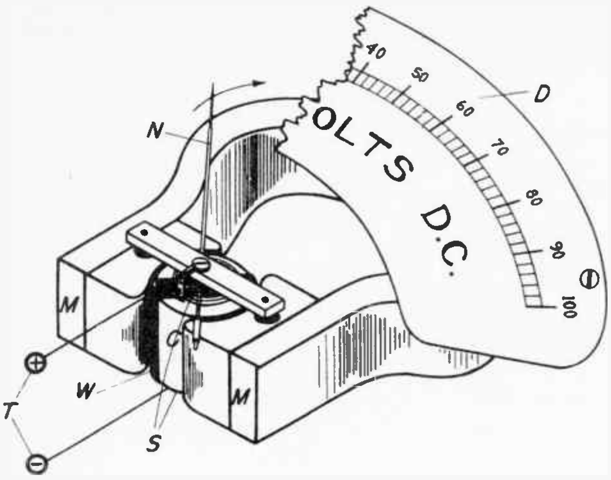

Fig. 16-42

across a dial *D* when the coil rotates, The ends of the coil wire are connected to two light spiral springs, *S*. The springs serve a double purpose – to conduct current from the terminals *T* to the coil, and to provide a torque to return the needle to its initial position when the current stops. Inside the coil, but not attached to it, a soft iron cylindrical core *C* is held in a fixed position.

A diagram of the coil, core and magnet ends, together with the magnetic fields, is like this:

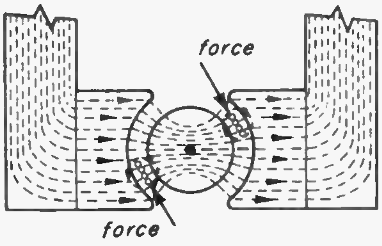

Fig. 16-43

The current in the coil wires is toward us on one side of the core, away from us on the other, so the magnetic fields due to the current are in opposite directions as shown. The field of each part of the coil reinforces the permanent magnet field on one side of the wires, and weakens it on the other. Both parts of the coil are pushed toward the weakened field. The forces on both parts of the coil are *in the same direction about the axis*, as shown. This results in a turning moment, or torque, that tends to rotate the coil clockwise.

The force on the coil is proportional to the current flowing. The coil turns until the counter torque of the spiral springs is equal to the torque produced by the magnetic fields. This counter torque is proportional to the rotation of the spring and of the needle attached to it. The deflection of the needle is proportional to the current. By properly calibrating the dial, we can read from it directly the number of amperes, or milliamperes, or microamperes flowing in the coil. The *scale* on the face of the dial is like this:

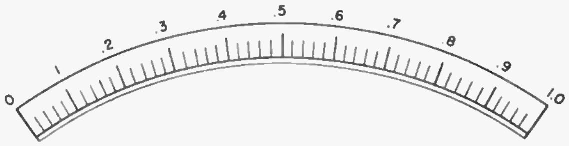

Fig. 16-44

Such a scale is called a *linear scale,* because equal divisions correspond to equal increments of current.

Practical Limitations. – The coil wire used in a meter movement is necessarily very fine, and cannot carry much current without overheating. Therefore no movement should ever be permitted to carry much more current than just enough to cause full-scale deflection of the needle. Even if the excess current is not enough to burn out the coil, it may still cause damage by slamming the needle hard against the stop post (usually placed just beyond the end of the scale on the dial) and thus bending it.

The fact that the maximum current the movement will take is drastically limited obviously places narrow limits on the *range* of values that the meter can be used to measure. We shall see that this range can be greatly extended by suitable circuits external to the movement.

Note also that the current must be in the proper direction. If its direction is reversed, the needle would move *downscale* from zero, instead of up. Some meter movements are made with the zero point of the scale in the center, so that readings may be obtained for current in either direction.

Sensitivity. – The calibration figures on the meter scale of course indicate the operating range of the movement – that is, the amount of current necessary to deflect the needle to the top end of the scale. The *smaller* the current required is, the *more sensitive* we consider the movement. Thus, a numerical measure of the sensitivity of the movement is the current necessary for full-scale deflection. This may be of the order of a few microamperes, or several milliamperes. We would then refer to a "1 milliampere movement", or a "50 microampere movement".

Another way to say the same thing, since I = E/R, would be to express sensitivity in terms of volts per ohm for full scale deflection. By custom, however, meter sensitivity is usually stated in terms of *ohms per volt,* which is the reciprocal of the full-scale current. Thus, a 1 ma. movement would be said to have a sensitivity of 1000 ohms per volt, and a 50 μa. movement a sensitivity of 20,000 ohms per volt. *A larger ohms-per-volt rating* thus indicates a *greater sensitivity.*

It should be emphasized that the sensitivity of the meter movement is *built into the movement itself.* It cannot be improved by any circuit external to the movement.

Practical Meters. – The three fundamental measurements that have to be made most often are: (1) voltage, in volts or millivolts; (2) current, in amperes, milliamperes or microamperes; and (3) resistance, in ohms or megohms. (In TV servicing work, we seldom have occasion to measure current directly, since to do so requires breaking the circuit.)

Instruments to measure any of these quantities are all built around the D'Arsonval movement. They are called respectively the *voltmeter, ammeter* or *milliammeter,* and *ohmmeter.* What distinguishes one from the other is the circuit external to the movement. Frequently, instruments are constructed using several external circuits, into any one of which the movement may be switched. Such an arrangement comprises a *multimeter,* which can be used to measure any one of several electrical quantities. Such a meter is the *Simpson Model 260 Meter,* the measuring instrument used by many television servicemen. Its use in servicing will be discussed later in the Course.

To make a meter movement into a voltmeter, resistances are connected in series with the movement. These resistances are called *multipliers,* and their purpose is to extend the range of the meter. They are usually mounted right inside the meter case, which is equipped with two terminals to which leads can be quickly connected. Ammeters have small resistances called *shunts* connected in parallel with the movement, also for the purpose of extending the range of the instrument. In referring to voltmeters and ammeters from here on, we shall mean to include within that term the multipliers and shunts as a part of the meter.

The three types of measuring instruments differ in the manner in which they are used. The ammeter must carry the same current that flows in the circuit being measured. Therefore the *ammeter must be inserted in series with the circuit.* For this reason, the circuit must be broken to insert the ammeter.

To measure voltage, it is necessary that the same voltage appear across the voltmeter as across the circuit or component whose voltage is to be measured. If we are merely measuring the terminal voltage of a battery, we can simply connect the meter terminals to the battery terminals. But usually, we want to measure the voltage drop across one or more resistors. Therefore the *voltmeter must be connected in parallel with the circuit.*

The manner of connecting ammeters and voltmeters is illustrated in the following diagram, in which the circles lettered "A" and "V" are the ammeter and voltmeter respectively, including their associated internal circuits:

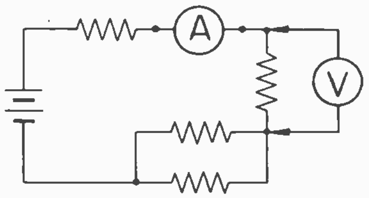

Fig. 16-45

Ohmmeters are simply ammeters containing their own voltage source – usually a flashlight battery installed somewhere in the meter case – and calibrated to read directly in ohms instead of amperes. They are used by connecting the meter across the resistor to be measured – *after first making sure that no current is flowing in the resistor.* It is usually necessary also to disconnect one end of a resistor to be measured, in order to avoid the effect of other resistances in parallel with it.

The D-c Voltmeter. – We have shown that the deflection of a meter needle is proportional to the current through its coils. But since this current is proportional to the voltage across the terminals of the movement, the dial may be calibrated directly in volts.

However, this in itself does not make a very practical voltmeter. The resistances of meter movements are relatively low, and consequently *only very small voltages can be tolerated across the movement.* Otherwise, burnouts would result. This obviously restricts the range of voltages which the meter can be used to measure. As we mentioned earlier, the range of the meter can be extended by the use of *multiplier resistances.*

A simple voltmeter circuit might look like this:

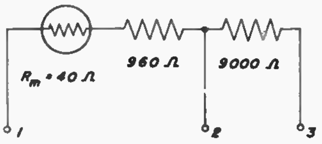

Fig. 16-46

Suppose the movement is a 1 ma. movement, with a resistance of 40 ohms. The highest voltage that can be applied to the movement is $E = IR = 0.001 \times 40 = 0.04$ volt. But because of the addition of the 960 ohm multiplier, the resistance of the movement is only 40/1000 of the total resistance between terminals *1* and *2*. If we apply 1 volt across these terminals, 0.960 volt will appear across the multiplier, and only 0.04 volt across the movement, as required for full-scale deflection. Similarly, if we apply 10 volts across terminals *1-3*, 9 volts would appear across the 9000 ohms, and only 1 volt across the movement and the 960 ohm resistor. Again we should get full scale deflection.

This circuit thus gives us a two-range meter. By the use of additional multipliers, we could provide additional ranges of 50, or 100 or 500 volts, as high as we cared to go. The scale of the movement could of course be calibrated to read directly in voltages for any of these extended ranges.

In extending the range of a voltmeter, the question may arise, have we increased its sensitivity? The answer is a definite *no*. The sensitivity of the meter depends on the amount of current required for full-scale deflection. This has not changed. The whole point of the multipliers is to limit the current to that value. However, the sensitivity of the voltmeter – which is the same as the sensitivity of the movement – can also be found in ohms per volt by *dividing the total resistance of meter and multipliers* for a particular range *by the full scale reading of that range.*

When Does a Voltmeter Read Correctly? – Any voltmeter, no matter what its sensitivity, will give a correct voltage reading when connected directly across a low-resistance source such as a battery. But if the source has a high resistance, or the measurement must be made across one of two or more large resistances in series, the *sensitivity of the meter will greatly influence the reading.* Many d-c voltage measurements on television receivers must be made across high resistances. If a low-sensitivity meter is used, extremely large errors will result. This is most clearly shown by an example.

Example: 220 volts are applied across two resistors in series, 0.8 megohm and 1.2 megohms. The voltage is to be measured across the 0.8 megohm resistor, using the 200-volt scale of a meter whose sensitivity is 2000 ohms per volt. (a) What is the correct voltage across the 0.8 megohm resistor? (b) What will the meter read?

Solution: The circuit is like this:

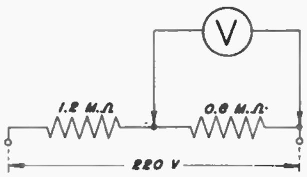

Fig. 16-47

(a) If the meter is not connected, the required voltage is easily computed by the laws of series circuits:

$$\frac{V}{220} = \frac{0.8}{1.2 + 0.8}$$

$$V = 88 \text{ volts}$$

(b) When the meter is connected as shown, however, the resistance between the ends of the 0.8 megohm resistor is *not* that of the resistor itself, but the equivalent resistance of the resistor in parallel with the meter. The meter resistance is

$$R_m = 200 \text{ volts} \times 2000 \text{ ohms/volt}$$

$$= 400{,}000 \text{ ohms} = 0.4 \text{ megohm}$$

The equivalent resistance between the meter terminals is

$$R_p = \frac{0.4 \times 0.8}{0.4 + 0.8} = 0.2667 \text{ megohm}$$

The voltage across this resistance, applying series circuit principles again, is

$$V = 220 \times \frac{0.2667}{0.2667 + 1.2} = 40 \text{ volts}$$

Since this is the voltage actually across the meter terminals, this is what the meter will read – less than half the true voltage when the meter is out of the circuit.

So we see that a low sensitivity voltmeter – which is a low resistance voltmeter – reduces the equivalent resistance across which we want to measure voltage, and thus reduce that voltage. If the meter is connected across a low resistance, the error is negligible. But if the resistance in parallel with the meter is of the same order of magnitude as the meter resistance, or larger, the error can be very great. Another way of looking at it is that if the meter requires, for full-scale deflection, a current comparable to that flowing in the circuit to be measured, it "steals" some of the current from the resistor. This is referred to as the *loading effect* of the meter. To give absolutely correct readings, no meter can be permitted to load the circuit under test, or otherwise disturb the current and voltage conditions already existing.

If you will go through the calculations of the foregoing example, using a meter having a sensitivity of 20,000 ohms per volt, you will find that the reading is 78.6 volts. This is still a substantial error, but it is much closer to the correct value of 88 volts. *The larger the resistance of the voltmeter, the closer will the reading be to the correct value.*

The D-c Ammeter. – When a movement is to be operated as an ammeter, the problem is again one of limiting the current through the movement to that required for full-scale deflection, but still permitting larger currents to be passed by the circuit. This requirement is met by placing low resistance *shunts* across the movement, bypassing most of the current. Thus, using as an example the 1 ma. 40 ohm movement we discussed before, we might have a circuit like this:

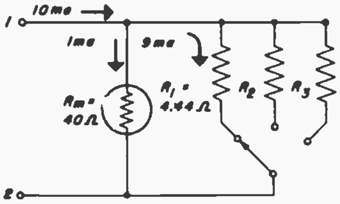

Fig. 16-48

With the switch in the position shown, 9 ma. would flow through R_1, and only 1 ma. through the movement. This would produce full-scale deflection. But a total of 10 ma. flows through the meter as a whole, and this would be the full-scale reading.

These current relations can be easily checked by noting that the same voltage appears across movement and shunt. Taking the movement, this voltage is $E = IR = 0.001 \times 40 = 0.04$ volt. The shunt must take the remainder of the 10 ma., or 9 ma. We can find the required shunt resistance by applying Ohm's Law: $R_1 = E/I_1 = 0.04/0.009 = 4.44$ ohms.

By proper choice of values for R_2 and R_3, we could provide additional ranges of 50 or 100 ma., or whatever ranges we wished, which could be used merely by resetting the selector switch.

Precaution. – A meter movement is a delicate device. It has jeweled bearings like a watch. Not only must it be handled carefully to prevent mechanical damage, but proper precautions must be taken against burning out the movement by excessive current. For this reason, in using a voltmeter or ammeter, *always make sure that the range of the instrument used is greater than the value you are going to measure.* If you don't know the approximate value to be measured, *select the highest range meter* (or highest range of a multimeter) available, and gradually work down to smaller ranges until you can get a readable deflection.

The Ohmmeter. – There is no way of measuring resistance *directly*. Any measurement of resistance must be made in terms of the *current* that flows in a resistance, either due to a known voltage, or by comparison with the current through a known resistance. If the voltage in a circuit is held fixed, then the current will depend only on the resistance of the circuit. This current can be measured by an ammeter, and its dial can be calibrated directly in ohms of resistance. *Thus an ohmmeter is merely an ammeter that is provided with its own voltage source.*

There are two main types of ohmmeters, series and shunt. The series ohmmeter circuit is like this:

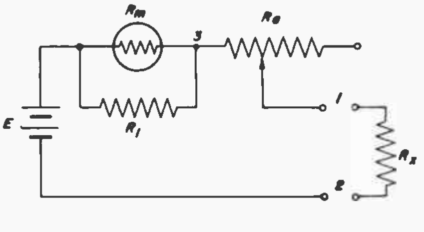

Fig. 16-49

The voltage source E is usually a flash-light battery mounted in the meter case. Disregard R_1 for the moment. If an unknown resistor R_x is connected to terminals *1-2*, a current will flow through the series circuit thus completed. The larger R_x, the smaller the current. The meter scale will therefore have its maximum current, corresponding to zero resistance across *1-2*, at the upper end of the scale.

Since the battery voltage can change over long periods, it is necessary to provide an adjustment so that zero resistance will give full-scale deflection. This is done by shorting the terminals *1-2* and adjusting the variable resistor R_a so the meter reads zero ohms.

Zero current — the low end of the scale — corresponds to infinite R_x, or open circuit at *1-2*. The scale, calibrated in ohms, will look like this:

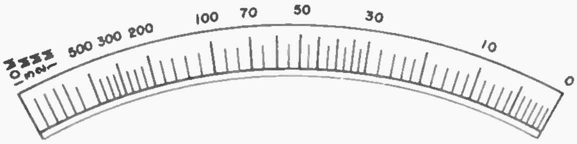

Fig. 16-50

Notice that this is a *non-linear* scale — equal intervals along the scale do not correspond to equal increments of resistance. The high numbers are crowded at the low end of the scale. This makes it difficult to read high values accurately. But now suppose we remove the shunt resistance R_1 by opening the connection *3*. More current will now flow *through the meter* (but about the same current through R_x), deflecting the needle up to the top end of the scale. If R_1 has a proper value, the reading on the scale will now be some definite fraction of R_x, such as 1/10 or 1/100. So by multiplying the reading by 10 or 100, we get a more accurate measurement of R_x than was possible before. Several such shunt resistors would provide several ranges for our ohmmeter. Alternatively, the range may be extended by increasing the battery voltage.

An alternative circuit that can be used as an ohmmeter is as follows:

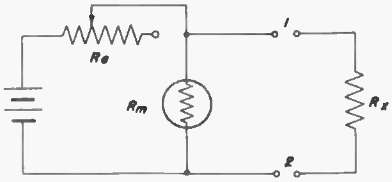

Fig. 16-51

Here the unknown resistance is connected *in shunt* with the meter. Now *the larger R_x* is, the less current will flow through it, but the more current will flow through the meter. The scale of the shunt ohmmeter, therefore, will show high resistance values at the top end of the scale. The scale will still be non-linear, however, with the numbers crowded toward the top end, thus:

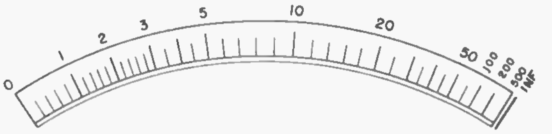

Fig. 16-52

Adjustment of R_a is made for full scale deflection (infinite resistance) with terminals *1-2 open*. It is obvious that shorting the terminals would short out the meter, and it would read zero for *any* setting of R_a.

The shunt ohmmeter circuit is generally used only for very low resistance ranges. This is because in order to have any appreciable effect on the meter current, the parallel-connected R_x must be of the same order of magnitude as the meter resistance itself.

The Simpson Model 260 Meter. — As previously noted, this is a multimeter, and is commonly used for field measurements by television servicemen. It looks like this:

Fig. 16-53

The meter comes with a pair of leads that can be easily plugged into jacks on the meter case. Provision is made, by suitable selector switches, for the measurement of direct voltages and currents, alternating voltages, and resistance.

The meter movement has a sensitivity of 20,000 ohms per volt, which is entirely adequate for most servicing work. The scale is long and easy to read. The assembly is easily portable, and rugged. It should, nevertheless, be handled carefully, as no delicate mechanism can take too much abuse.

The d-c voltage ranges available are 2.5, 10, 50, 250 and 1000 volts. Switching from one range to another is easily accomplished by a single rotary selector switch. An additional range, up to 5,000 volts, is furnished by a separate terminal, in series with which is an additional multiplier resistance of 80 megohms. The d-c voltage circuits are arranged as follows:

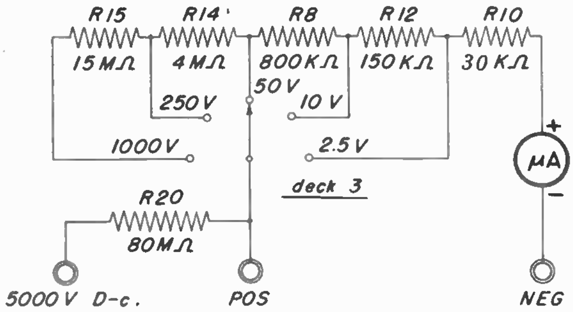

Fig. 16-54

Five d-c ammeter ranges are provided, ranging from 100 microamperes to 5 amperes, full scale. Current measurements are almost never made directly in TV servicing work, because of the necessity for breaking the circuit to insert the meter in series with it. For this reason, we will not consider the ammeter circuits in detail.

The Simpson 260 Meter has three ohmmeter ranges – R, R × 100, and R × 10,000. The circuit used is a combination of the series and shunt type. In addition, an extra battery is switched into the circuit automatically when it is set for the high resistance range. The ohmmeter circuits are shown in Fig. 16-55.

It is left as an exercise for the student to study this circuit diagram carefully, justify the statement made above regarding the composite nature of the circuit, and finally explain to himself how the circuit provides three separate ranges of the values stated.

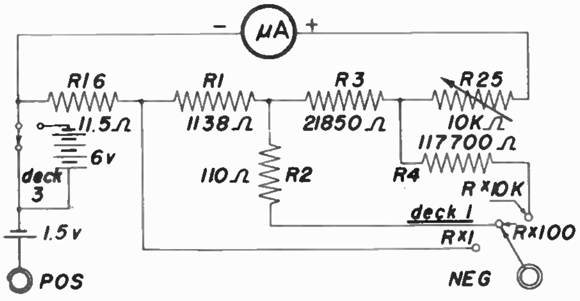

Fig. 16-55

The Model 260 also contains provision for measuring a-c voltages at power frequencies and low audio frequencies. We are not yet prepared to study their operation, which depends on both the frequency and the waveshape of the voltage to be measured. A-c voltmeters will be studied separately later in the course. A word of caution here, however, will not be amiss. There are many varieties of a-c meters, and unless we know just how a particular meter works, and exactly what value it is intended to measure, we may get readings that can be more misleading than helpful.

SPECIAL D-C CIRCUIT ELEMENTS

16-9. The circuits encountered in TV receivers carry both d-c and a-c – often both in the same circuit. Some of the components are included in the circuit because of their a-c properties. Such for example, are coils and condensers, whose a-c functions will be discussed in Lesson 17. These same components, however, have definite properties in d-c circuits. And since both direct and alternating current often flow in the same circuit, we should consider the d-c properties of these components here.

Also, there are a few special kinds of resistors whose behavior is not explained strictly by Ohm's Law. It is the purpose of this section to discuss briefly these exceptions and apparent exceptions to the d-c circuit principles developed in this lesson.

Coils as D-c Elements. – In connection with meters, we showed that when a wire is formed into a coil, the magnetic field set up by a current in the wire is concentrated within the coil.

It will be explained in Lesson 17 that such a coil has the property of *inductance,* which is very important in a-c circuits. (Actually, even a straight wire possesses some inductance, but it is so small that its effect is negligible except at extremely high frequencies.) The symbol by which a coil is represented in schematic diagrams is like this:

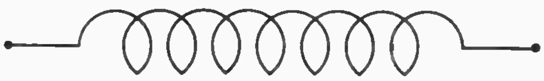

Fig. 16-56

So far as d-c is concerned, the coil differs in no degree from a straight wire of similar length. However, *all wires have some resistance.* In drawing schematic diagrams, we neglect the resistance of the connecting wires, because the resistance of short wires is extremely small. But the length of wire of which a coil is made may have appreciable resistance. This is not always shown as such on the schematic diagrams of TV receivers. It is common practice to letter on TV schematics the resistance of all coils of 1 ohm or more, and sometimes even less. But even here you have to look carefully for the lettering, because the resistance is not represented by the zigzag symbol. In tracing such circuits, therefore, always remember that the coil has a resistance, whether it is shown on the diagram or not, and that this resistance is often enough to account for a measurable d-c voltage drop across the ends of the coil.

Condensers as D-c Elements. – A condenser, as we shall explain in Lesson 17, consists essentially of two conductors separated by an insulator. *So far as d-c is concerned, a condenser is an open circuit,* and no direct current can flow through it. This is not true of alternating current, as we shall see.

Condensers are represented schematically in several ways, thus:

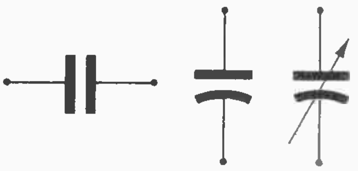

Fig. 16-57

The only thing we need to know right now is that when they appear in a d-c circuit, they may be treated as any other open circuit.

It should be emphasized that the foregoing statements about coils and condensers apply *only for steady direct current.* They do not apply if the conditions are *changing,* as when a switch is suddenly opened or closed. For instance, if a resistor and a condenser are connected in series with a battery and switch, a current *does* flow for a brief time after the switch is closed – in spite of the fact that the condenser is an open circuit for d-c. This phenomenon will be covered further in the next lesson.

Linear and Non-Linear Resistances. – Ohm's Law has told us that the current that flows through a resistor is proportional to the applied emf. This implies, among other things, that the current flows equally well in either direction. If we were to plot a graph of the current and voltage drop of such a resistor, we would get the following pictorial representation of how it behaves:

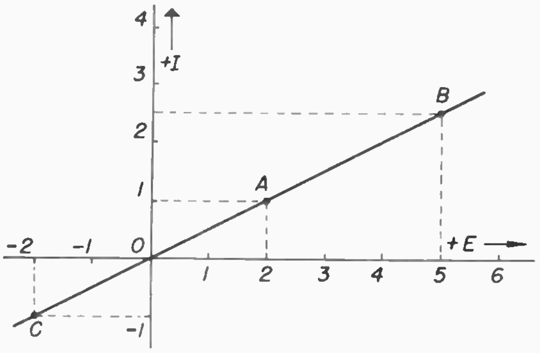

Fig. 16-58

Since this graph is a *straight line,* the resistor would be called a *linear element,* or more specifically, a *linear resistance.* The graph also tells us the value of the resistance. We can pick any point on it, such as *A*, *B* or *C*, and follow lines parallel to the axes to the corresponding values of E and I. By taking the ratio of these two values, we get the resistance. Thus, for point *A*, $R = 2/1 =$ 2 ohms. If the resistance is linear, we get the same value of resistance no matter what point on the curve we pick. (A graph like this is also called a *curve,* even though it is straight. It is also called a *characteristic curve* or just plain *characteristic.)* Thus, for point *B*, $R = 5/2.5 = 2$ ohms.

Now consider a common electric light bulb – or the heater of a vacuum tube, which behaves in much the same way. It is normally operated with enough current to get it red hot or even white hot. Its temperature thus increases several hundred or even several thousand degrees. But we know that this increases its resistance. If we plotted a characteristic curve of the heater, we would *not* get a straight line, but something like this:

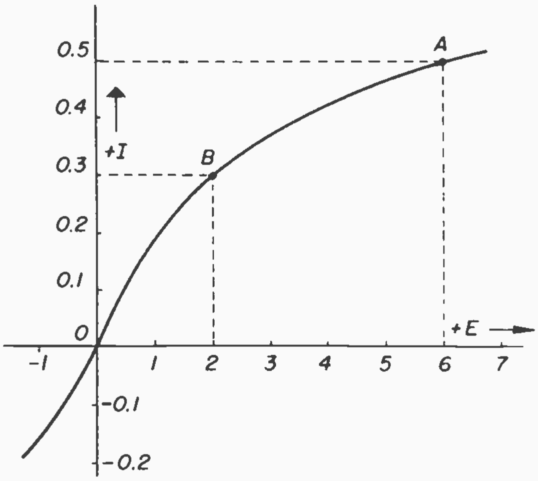

Fig. 16-59

At point *A*, we find the resistance is R = 6/0.5 = 12 ohms. But if we take point *B*, R = 2/0.3 = 6.67 ohms. Thus the resistance varies according to the current flowing. Such a resistance, because of the shape of its characteristic curve, is called a *non-linear resistance.*

Although we can use Ohm's Law to find its resistance at any one point on its characteristic, we could not find the current by the use of Ohm's Law alone. Ohm's Law says that I = E/R. To find the current we must know both E and R. But since R varies with I – the quantity we want to find – we would have to have the characteristic curve of the resistor, and from it find the resistance value corresponding to the voltage value we were interested in. But if we have such a characteristic curve, we can read the current directly from it, without using Ohm's Law. This is what we mean when we say that a non-linear resistance does not follow Ohm's Law. Actually, it does, but we can't make practical use of the fact by the methods we have already discussed. Circuits involving non-linear elements are usually solved, if it is required, by graphical methods which will be explained in a later lesson.

Vacuum Tubes as One-Way Resistors. – Vacuum tubes will be covered more thoroughly in Lesson 19. Most of us know, however, that they consist of two or more electrodes enclosed in a vacuum. When one of the electrodes – the *cathode* – is heated, it emits electrons, which flow to the *plate*.. This takes place, however, only if the plate potential is positive with respect to the cathode. If the plate is negative, no current flows.

The relation of current to the voltage between cathode and plate is shown in the following typical characteristic curve:

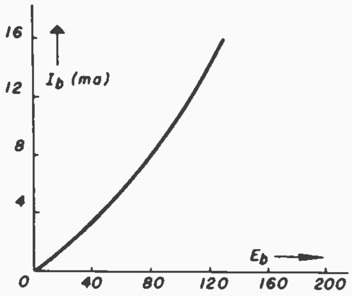

Fig. 16-60

It will be noted that even when the plate is positive, the tube is not quite linear. We could pick two points on the curve, and calculate the resistance of the tube as we did before, and get two different answers. And when the plate is negative, the curve shows that no current flows.

The tube is not a physical resistance as we think of such things. That is, it does not depend for its current-carrying properties on the random migration of electrons through solid material. But if we think of resistance as simply opposition to current, measurable as the ratio of voltage to current, we can then speak of the *resistance of the tube.* The vacuum tube, then, is a special kind of resistor from several points of view. It is *non-linear.* It is also a *one-way conductor.* It must

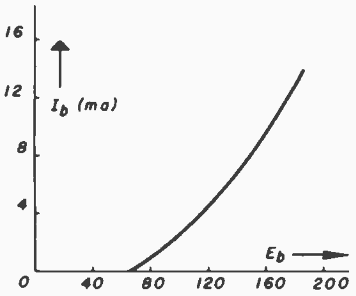

Fig. 16-61

be viewed as a d-c resistance if the plate potential is positive; but an open circuit if the plate potential is negative.

Vacuum tubes have one other peculiar property as d-c circuit elements. By making a third electrode, the *grid*, negative with respect to the cathode, the characteristic curve is altered somewhat as shown in Fig. 16-61

For any one value of plate voltage, we have reduced the amount of current that would flow. We have thus increased the d-c resistance of the tube for each value of plate voltage. Thus the third important d-c property of vacuum tubes is that they act as *adjustable resistors*, whose resistance depends not only on the plate voltage applied to them, but on the grid voltage as well.

◆

NOTES

NOTES

NOTES

NOTES

NOTES

TELEVISION SERVICING COURSE

PREPARED BY

RCA INSTITUTES, INC.
A SERVICE OF RADIO CORPORATION OF AMERICA

HOME STUDY DEPARTMENT
350 West 4th St., New York 14, N. Y.

LESSON 17

A-C CIRCUIT PRINCIPLES

17-1. The Nature of Alternating Current
17-2. Induced Voltage and Current
17-3. Inductance
17-4. Capacitance
17-5. Time Constants 17-25
17-6. Ohm's Law for Reactive Circuits
17-7. Impedance

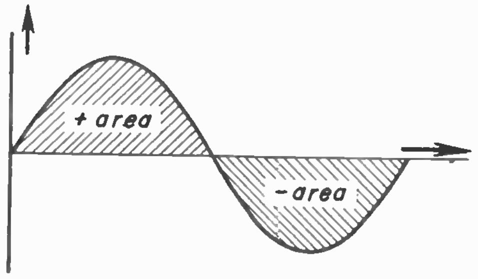

Lesson 17

17-1. THE NATURE OF ALTERNATING CURRENT

In the "D-C Electricity" lesson we discussed direct current or d-c as the steady flow of electrical charges in one direction. There is a common misconception that alternating current is a different kind of electricity. Actually, there is no such thing as kinds of electricity. Basic electrical charges *always* obey the fundamental laws of attraction and repulsion that we have already discussed.

The difference between d-c and a-c is not a difference of kind but of behavior. *Alternating current is simply current that is continuously varying, both in strength and direction; alternating voltage is voltage that is continuously varying, both in strength and polarity.* Alternating current flows when an alternating voltage is applied to a circuit. Most of the signals in television and radio receivers are alternating voltages or currents.

Let us examine the variations of the alternating voltage and current in the simple circuit shown in Fig. 17-1*a*: a generator of a-c voltage connected to a resistor.

The most common method of showing variations in voltage or current, or both, is by means of a graph, as shown in Fig. 17-1*b*. Here we have a horizontal reference line that represents *time*. We can divide this into equal sections, starting at the left, and call each section a second or a fraction of a second. Traveling to the right along the time line or axis indicates the passage of time. The vertical reference line represents *voltage or current*. This can be marked off in equal sections representing volts or amperes. The point at which the vertical line is intersected by the horizontal line is the *zero point*, at which voltage, current, and time have zero values.

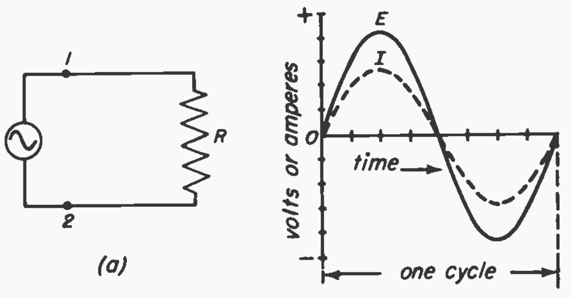

(a)

(b)

Fig. 17-1

Everything *above* the horizontal line represents voltage of positive polarity or current of positive direction. The higher the voltage or current rises above the reference line, the greater is its strength. Everything below the horizontal line represents negative polarity or direction.

Now let us use the graph to see the alternating voltage and current in the circuit of Fig. 17-1*a*. When there is no difference of potential between terminals 1 and 2, no current flows through the resistor *R*. At such a point, both voltage or current and time are, as shown, at the zero point on the graph.

An instant later, a very small voltage appears across the terminals, making terminal 1 slightly positive with respect to terminal 2. We know from the previous lesson that a current will begin to flow from the negative terminal, up through the resistor, toward the positive terminal. We say that this current is flowing in the positive direction. The voltage constantly increases in strength, and from Ohm's law we know that the current must also increase.

The voltage is shown on the graph by the steadily rising solid line. The accompanying current increase is represented by the dashed line. The fact that neither line levels off shows that both quantities are continuously varying.

After a steady increase in the strength of the voltage, a point is reached at which it begins to decrease in strength, and the voltage curve swings downward on the graph. The highest point reached while the polarity of the voltage is positive is called the *positive peak*. As the voltage begins to decrease, the current must follow, so in this simple resistive circuit the positive peaks of voltage and current occur at the same instant.

As shown by the lines on the graph, both voltage and current decrease steadily until they reach zero together. At this instant there is again no difference of potential between terminals 1 and 2. An instant later there is a slight voltage between the terminals, but this time terminal 1 is slightly negative with respect to terminal 2. *The polarity of the voltage has reversed.* The current in the circuit always flows from negative to positive, so current is now flowing through the resistor in the opposite direction. We say that it is now flowing in the negative direction.

On the graph, the reversals of voltage and current are shown by the fact that the solid and dashed lines are now on the negative side, below the horizontal reference axis. The voltage and current steadily increase negatively, pass through a *negative peak*, and then decrease until both again reach zero at the same instant.

At this point the voltage and current, starting from zero time, have swung through a range of positive values, reversed, gone through a range of negative values, and returned to zero. We call this one complete *cycle* of alternating voltage or current. The shape of the voltage or current graph is called the *waveshape* or *waveform*.

If we were to follow the waveform from the end of this first cycle, we would find that it repeats itself time after time. We would also find the voltage reverses polarity and the current reverses direction each time they pass through zero, and that each complete cycle takes the same length of time. The number of complete cycles through which the voltage or current passes in a second (abbreviated *cps)* is its frequency. The frequencies of alternating voltages vary over a tremendous range, from a few cycles per second to millions of cycles per second.

Examining the waveforms in Fig. 17-1*b*, we find that one complete cycle goes through two *alternations*, each of which lasts a half cycle. A complete cycle however, need not begin and end at zero. Looking at Fig. 17-2, we can also trace a complete cycle by starting at the positive peak, running through zero and the negative alternation, and ending at the next positive peak. In this case the positive alternation is broken into two parts; one from the positive peak to zero; the other, following the negative alternation, from zero to the positive peak again. However, all the values are there. Similarly, a complete cycle can be traced from one negative peak to the next.

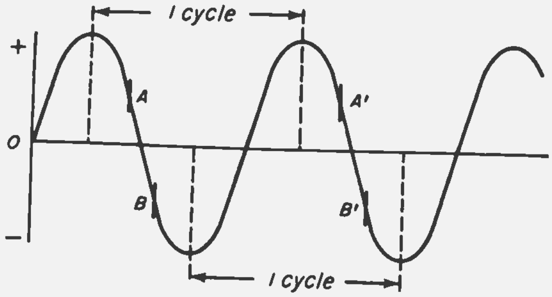

Fig. 17-2

In Fig. 17-2, the waveform between *A* and *A'* is a complete cycle. The waveform between *B* and *B'* is also a complete cycle. Note, however, that from a positive peak to the next negative peak is only a half cycle, because, while the voltage alternates in polarity, it does not pass through two *complete* alternations. *For any regularly repeating quantity, a cycle is a complete series of positive and negative values.*

The a-c waveforms illustrated in Fig. 17-1*b* and 17-2 are called sine waves. They occur more frequently than any other type of wave. Although we will encounter many different a-c waveforms in television receivers, the sine wave is basic. Sine-wave voltage can be generated mechanically or electronically.

Since the frequencies of alternating voltage may vary over such a wide range, it is convenient to refer to them by the use of prefixes. For example, a thousand cycles per second is referred to as a *kilocycle (kc)*, and a million cycles per second as a *megacycle (mc)*. Thus the picture intermediate frequency of a TV receiver may be written as 45.75 mc, rather than 45,750,000 cps. The more important prefixes used in radio and television are given in tabular form in Table A.

TABLE A

Prefix	Equivalent	Powers of Ten	Example
micro-micro	.000 000 000 001	10^{-12}	1 micromicrofarad = .000 000 000 001 farad
micro	.000 001	10^{-6}	1 microampere = .000 001 ampere
milli	.001	10^{-3}	1 millivolt = .001 volt
kilo	1,000	10^{3}	1 kilocycle = 1,000 cycles
mega	1,000,000	10^{6}	1 megacycle = 1,000,000 cycles

Also shown in Table A are equivalent values in *powers of ten*. Powers of ten are a form of engineering shorthand much used in a-c and other calculations. By the use of this notation, very large or very small numbers can be expressed without writing long series of zeros. Examination of Table A will show that the *exponent* (the small number above and to the right of the ten) indicates how many times ten is multiplied by itself. For example, to convert 6,000,000 to powers of ten, the decimal point is moved 6 places to the left, and the exponent becomes 6, thus: $6{,}000{,}000 = 6 \times 10^6$. It might also be written $.6 \times 10^7$ or 60×10^5. Thus 45.75 mc may be written as 45.75×10^6. In the case of negative numbers, the decimal point is moved to the right and the exponent becomes negative. For example, 1 milliampere = $.001$ ampere $= 10^{-3}$ ampere. Similarly, 250 micromicrofarads $= 250 \times 10^{-6}$ microfarad, or .00025 microfarad.

17-2. INDUCED VOLTAGE AND CURRENT

From the "D-C Electricity" lesson we know that current flowing through a conductor creates a magnetic field around the conductor. A current-carrying wire, placed in another magnetic field, has a mechanical force exerted against it, tending to push it away from the second magnetic field in one direction or the other. This occurs because, as shown in Fig. 17-3, the magnetic fields cancel on one side of the wire but join forces on the other side.

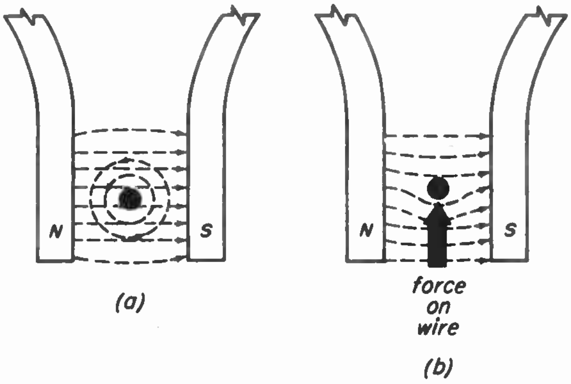

Fig. 17-3

On the other hand, when a wire is moved through a magnetic field so that it cuts across the magnetic lines of flux or force, a voltage is generated in the wire and if the wire is connected to an external circuit this voltage causes a current to flow.

The same thing happens if the lines of force are moved so that they cut across the wire. In either case, the voltage generated in the wire is called an *induced voltage*, and the current that flows as a result is called an *induced current*. The process is called *induction*. It is the basic principle on which a-c generators operate. Mechanical energy used to move the wire is transformed to electrical energy.

An a-c generator in its simplest form may be represented by a single loop of wire, called an armature, mounted to rotate on a shaft between the north and south poles of a permanent magnet. This arrangement is shown in Fig. 17-4.

Two sides of the loop *A-A'* and *B-B'*, are always at right angles to the direction of the magnetic lines of force between the poles. As the armature rotates, these sides cut the lines of force, and a

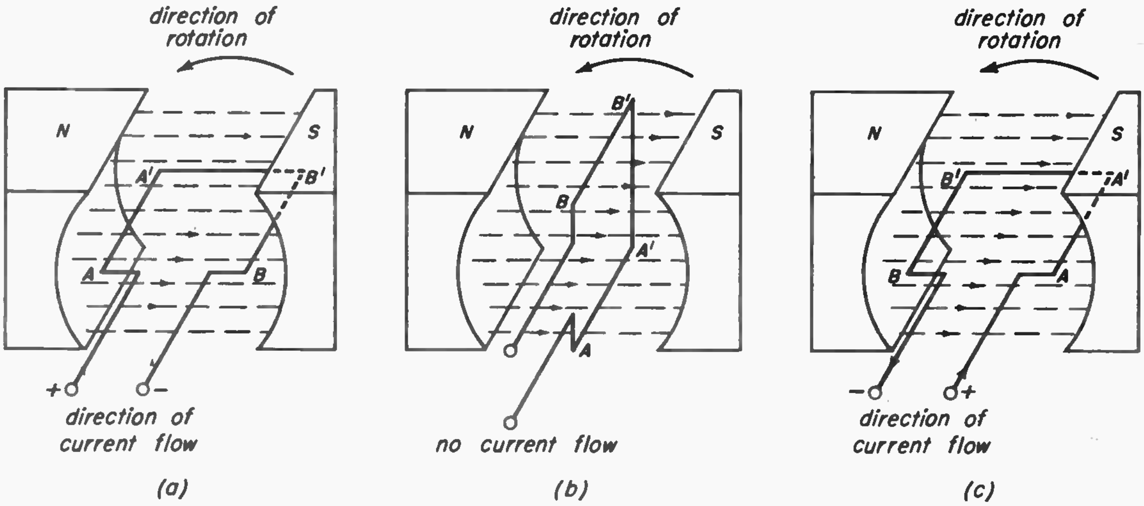

Fig. 17-4

voltage is induced in each side. The magnitude of the induced voltage is dependent upon the number of flux lines that are cut by the loop in a given period of time. The polarity of the induced voltage depends upon the direction in which the loop is moving and the direction of the field of force. When the loop is in the position shown in Fig. 17-4*a*, the greatest number of lines of force are being cut. Hence the maximum voltage is induced when the loop is this position. When the loop reaches the position shown in Fig. 17-4*b*, no lines are being cut, and the induced voltage is zero.

In Fig. 17-4*a*, side *A-A'* of the loop is moving downward, and a voltage is induced in that side, *A'* becoming negative with respect to *A*. At the same time, side *B-B'* is moving upward, and a voltage is induced in that side, *B* becoming negative with respect to *B'*. Since the two sides of the loop are connected in series, these induced voltages add. The total voltage at the terminals of the loop, therefore, is the sum of the voltages induced in each side, and the polarity is as shown in the figure. If the ends of the loop are connected to an external circuit current will flow from the negative terminal of the loop, through the external circuit, to the positive terminal of the loop.

The value of the voltage induced depends upon the number of lines of force cut in a given time. If the number of flux lines is increased, or the loop is rotated at a faster rate, a greater voltage is induced. Between the positions of zero and maximum voltage, the sides of the loop cut an increasing number of flux lines in a given time, so that the voltage rises steadily from zero to maximum. Between maximum and zero, the induced voltage decreases as flux lines are cut at a decreasing rate. From one zero point to the next the polarity of each side of the loop remains the same, so the result at the loop ends is a voltage that follows the shape of a single alternation or one-half cycle of the waveform shown in Fig. 17-2.

As the loop passes the zero voltage point, however, the side that had been moving downward begins moving upward through the field, changing the polarity of the induced voltage. The side that had been moving up begins moving down, also reversing the polarity of the induced voltage. Since the induced voltages are in series, the end of the loop that was positive becomes negative, and the other becomes positive. This is shown in Fig. 17-4*c*. The voltage waveform obtained from the loop thus begins an alternation opposite in polarity from the first.

One complete revolution of the loop or armature, therefore, results in one complete cycle of sine-wave a-c voltage. The fact that the sides of the armature move in a circle in a uniformly distributed magnetic field is responsible for the sine-wave shape of the induced voltage.

Illustrated in Fig. 17-5*a* is an end-on view of the loop in a simple a-c generator. The dashed circle represents the path followed by the sides of the loop, and the two dots at the ends of the arrowheads are the sides of the loop. The loop is shown in the zero voltage position, as can be seen by comparing the figure with Fig. 17-4*a*. Since equal magnitudes of voltage are induced in both sides at a given time, however, we need consider only what is happening in one side. Therefore, we can represent the loop as shown in Fig. 17-5*b*. The location of the arrowhead shows the position of one side of the loop, and we can rotate the arrow around the circle to represent the position of the other side of the loop at any instant.

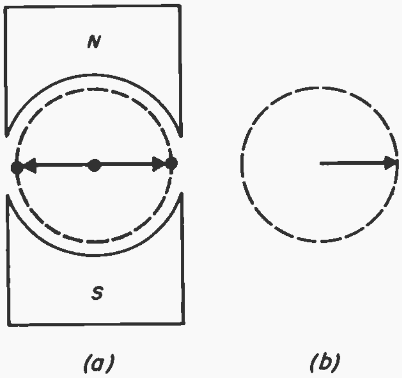

Fig. 17-5

Such a circle is often divided into 360 degrees for convenience in locating positions on its circumference. In this way we can denote the position of the loop in the magnetic field in *electrical degrees*. Furthermore, we can project the circle along a straight line, and divide the line into 360 electrical degrees. Doing this, we can draw the waveform curve and see at a glance the magnitude of voltage induced in the loop at any position in its rotation.

How this is done can be seen in Fig. 17-6. The straight line upon which we project the circle is the time line of the waveform graph in Fig. 17-1. The distance between 0° and 360° represents the time in which the loop armature makes one revolution, divided into degrees for convenience.

At *(a)* of Fig. 17-6, the loop is parallel to the lines of force, at 0°. No flux lines are being cut, so no voltage is induced in the side of the loop. In Fig. 17-*b*, however, the loop has rotated counterclockwise to 45°, some flux lines have been cut, and a voltage has been induced. The magnitude of the induced voltage is always proportional to the distance between the arrowhead and the reference or 0° line. The distance is represented in the figure by the dashed line *A*. This line, mathematically, is called the *sine* of the angle the loop makes with the 0° line. By projecting this sine, the vertical projection *A*, on the horizontal time line at the 45° mark and drawing a smooth curve up to it from zero, we can show how a 45° portion of the sine curve is generated.

The drawings of Fig. 17-6*c* through 17-6*i* follow the loop through one complete revolution, generating one cycle, or 360 electrical degrees. Notice that the polarity of the induced voltage reverses at 180° or a half cycle. The positive peak occurs at 90°, and the negative peak at 270°.

The speed at which the loop revolves determines the *frequency* of the induced voltage. If it makes 60 revolutions per second, a 60-cycle voltage is generated; 400 revolutions per second produce a 400-cycle voltage, etc.

Phase and Phase Difference – Quite often we encounter two alternating quantities, such as voltage and current, that have a time difference between them. For instance, an a-c voltage may reach its positive peak at the instant the a-c current in the same circuit reaches zero. The voltage, then, must have started its cycle 90 electrical degrees or a quarter-cycle before the current. As long as the voltage and current have the same frequency, this time difference between them will remain the same. It is called

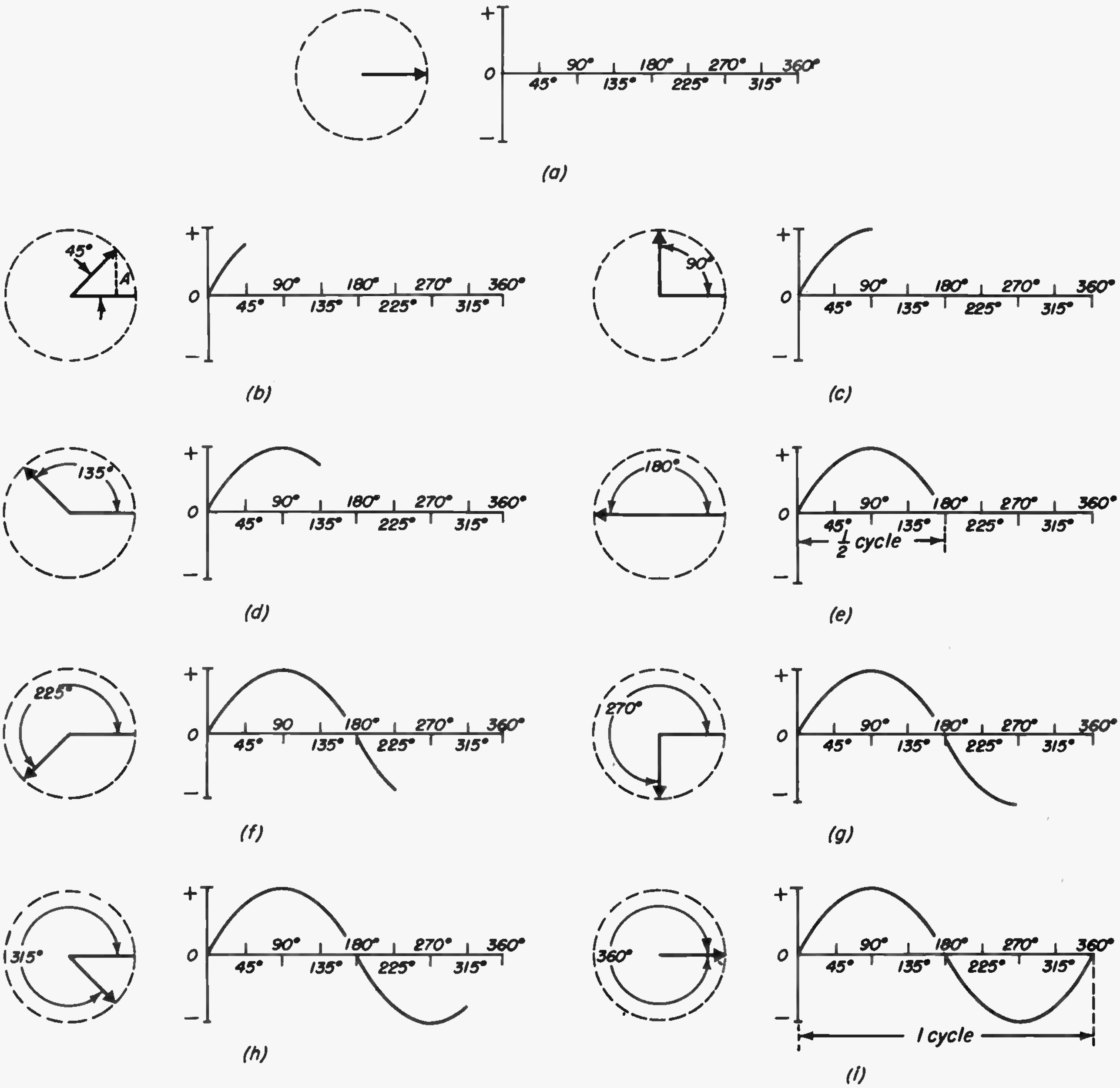

Fig. 17-6

the *phase difference* or *phase angle*. Remember that, basically, it means a difference in time.

We can show a phase angle or phase difference of 90° by waveforms on a graph, as in Fig. 17-7*a*. Note that *A* is at 90° when *B* starts. We express the difference by saying that *A leads B* by a phase angle of 90°, or that *B lags A* by 90°.

If two quantities such as voltage or current are exactly in step, beginning and ending their cycles at the same instant, they are said to be *in phase*. They need *not* be of the same magnitude. One may be very large and the other very small, but they are in phase if their cycles begin and end at the same time.

Phase differences may be great or small, from 1° to 359°. When the phase angle is 180°, the polarities of two quantities are exactly opposite, as shown at Fig. 17-7*b*.

The phase differences between two

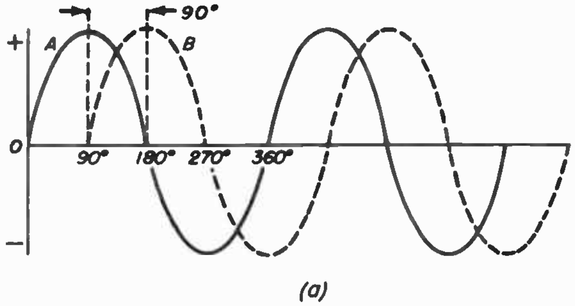

(a)

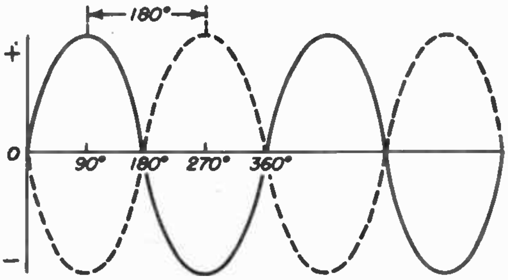

(b)

Fig. 17-7

voltages or two currents, or between a voltage and a current, are very important in a-c work. For instance, when an a-c voltage is applied to a circuit that contains only resistance, the current in the circuit remains *in phase* with the applied voltage. Later in this lesson, however, we will see that capacitance causes the current to lead the voltage and inductance makes the current lag the voltage.

Types of A-C Waveforms – Thus far we have considered the sine-curve (also called *sinusoidal)* a-c waveform. There are many other waveforms however, several of which will be found in the circuits of television receivers.

We are primarily interested in *periodic* waves– that is, waves that repeat themselves at definite time intervals. When a waveform repeats itself regularly, it must have a definite frequency, regardless of the shape of each cycle. If we place a sine wave of the same frequency in phase with the periodic wave, their cycles must begin and end at the same instant. Such a sine wave is called the *fundamental* of the periodic wave.

Figure 17-8 shows three common non-sinusoidal waveforms. The waveform at *(a)* is called a *square wave*. Its fundamental is the sine wave *A*. Square waves are widely used in TV, although we seldom encounter the complete waveform, as shown here. Usually we see a series of positive or negative alternations, which can be illustrated on the drawing by covering everything above or below the reference line, leaving one set of alternations, either positive or negative. Such alternations, all of the same polarity, are often called *square-topped pulses*. A *pulse* is a single alternation of voltage or current which (usually) starts at zero and returns to zero.

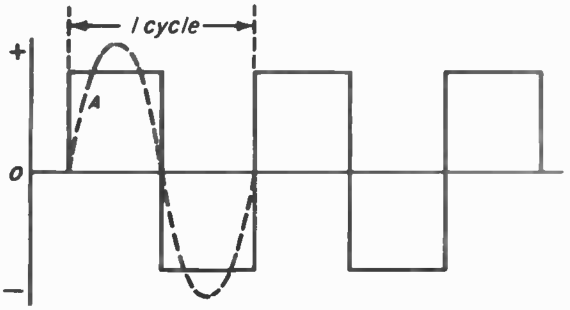

(a) square wave

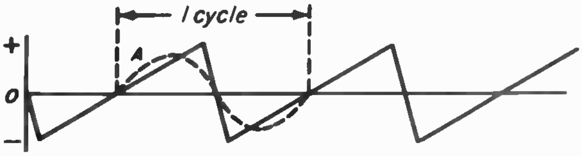

(b) sawtooth wave

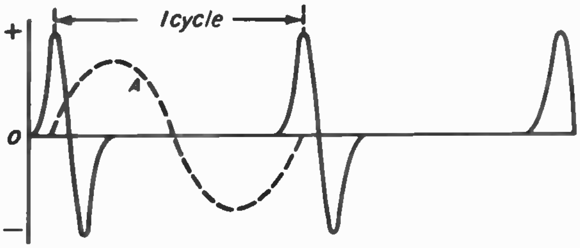

(c) pulses

Fig. 17-8

Actually, a series of positive or negative pulses constitutes a *d-c* voltage or current, because there is no reversal of polarity if the opposite half cycles are completely suppressed. The half-cycle pulses are called pulsating d-c, even though they are often formed by generating a square-wave a-c voltage and cutting off one set of alternations.

Square-topped pulses are used for the sync, blanking, and equalizing pulses in the composite television waveform. Thus they are found in the sync and deflection circuits of TV receivers. Figure 17-8*b* is another type of a-c waveform, called a *sawtooth wave,* which is also found in TV deflection circuits. Its fundamental is the sine wave *A*.

The waveform illustrated in Fig. 17-8*c*, a series of spaced pulses, is found in the sync section of a television receiver. Again the sine wave *A* shows the fundamental frequency. At first glance this doesn't look right, because the voltage or current is zero during most of each cycle. Remember, however, that frequency is the number of repetitions per second, so each cycle must last until the waveform begins to repeat.

With a pulse waveform like this, no work is done in the circuit while the voltage or current is at zero, so we're interested in the active portion of the waveform: the pulses.

Any a-c voltage may be converted to pulsating d-c voltage by using special circuits that cut off one set of alternations, as shown in Fig. 17-9*a*, or by adding the a-c voltage in series with a steady d-c voltage. By the latter method the level of the a-c may be raised to a point where the circuit voltage never reverses polarity, even though the a-c is reversing regularly.

For example, consider the square wave shown in Fig. 17-9*b*, in which the positive and negative peaks are 10 volts each. Suppose we connect a steady d-c voltage of +10 volts in series with the square wave voltage. The result of adding the two voltages is shown in Fig. 17-9*c*. During the positive half-cycle, the a-c voltage is +10 volts, which must add to the d-c, causing a resultant voltage of +20 volts. During the negative half-cycle, the a-c reverses polarity and drops to −10 volts. But the d-c is still +10 volts and the two cancel, producing a voltage of zero. Thus the polarity of the resultant voltage never reverses, even though an a-c voltage is present. By adding the d-c component, we have raised the square wave above the reference line and produced a pulsating d-c.

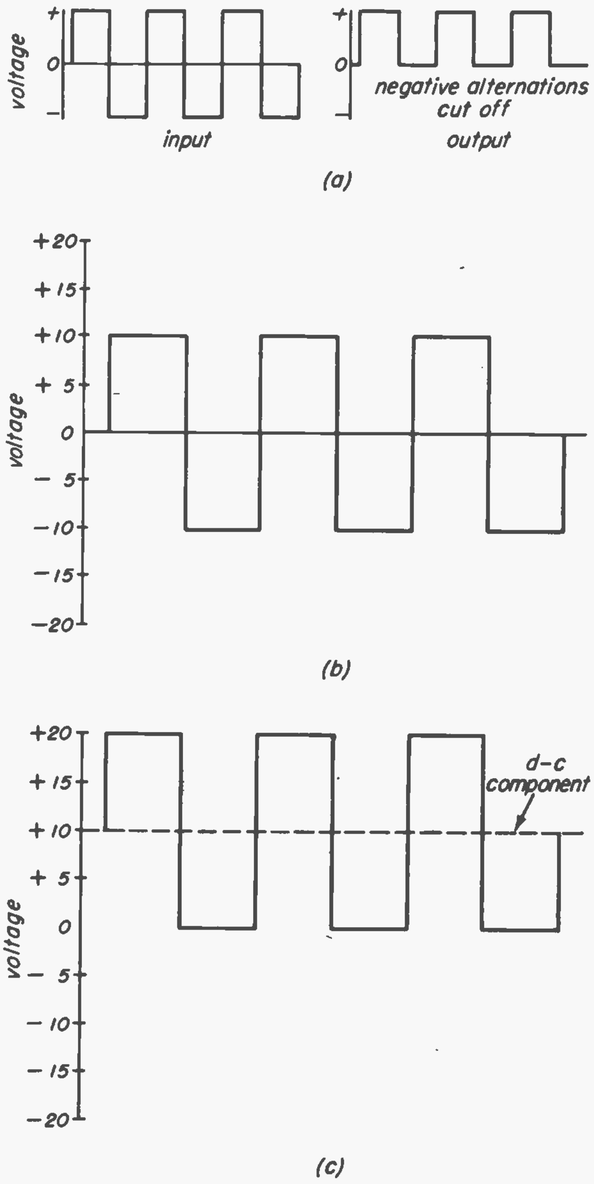

Fig. 17-9

Complex Wave Analysis – Both the square and sawtooth waves, as well as other complex types, are created by combining sine waves of different frequencies and amplitudes, starting always with the *fundamental.* That is, to produce a

400-cycle square wave, we must start with a sine wave of 400 cps.

The development of the square wave is shown in Fig. 17-10. At *(a)* we add to the fundamental sine wave, *1*, another sine wave, *2*, of smaller amplitude and three times the frequency of the fundamental This is called the *third harmonic*. A *harmonic* is a frequency that is a whole-number multiple of a given fundamental; in other words, it may be two, three, four, five, etc., times the fundamental frequency. If the fundamental in Fig. 17-10 were 400 cycles, the third harmonic would be 1,200 cycles, or 1.2 kc.

When the third harmonic is added to the fundamental, the resultant wave, *3*, has a double peak and steeper sides. At *(b)*, the fifth harmonic – five times the frequency of the fundamental – is added, with the result shown in curve *5*. Next, at *(c)*, we add the seventh harmonic, curve *6*. Note that the resultant curve *7* has a flattened top and sides which are quite steep. It is approaching the shape of the square wave. As we add more odd-numbered harmonics, the ripple in the top is smoothed out and the waveform becomes more nearly square.

If a sawtooth wave is analyzed, it is found to be composed of the fundamental and *all* harmonics.

In addition to the waveforms we have examined, many irregular a-c waveshapes exist. In such waves, one alternation is often longer or shorter than the following, and the positive peak may be much larger or smaller in magnitude than the negative peak. As long as each successive cycle has the same time duration, however, the waves are periodic. On the other hand, an *aperiodic* waveform is one in which successive cycles have different frequencies – and often different shapes as well. The video or picture signal in a TV set is aperiodic, containing many different waveshapes and frequencies.

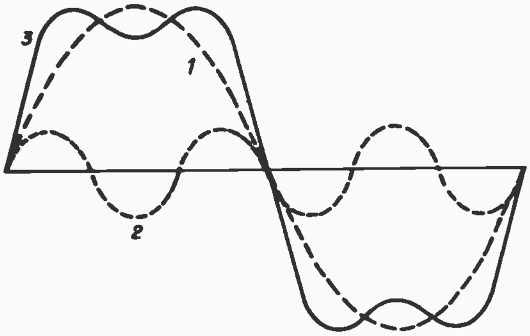

(a) fundamental plus third harmonic

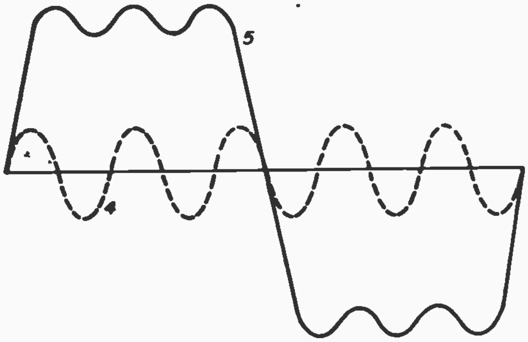

(b) fifth harmonic added

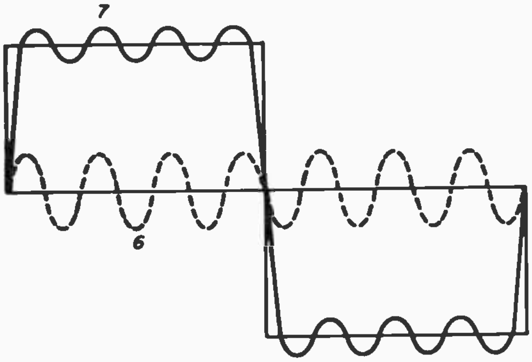

(c) seventh harmonic added

Fig. 17-10

A-C Values – To solve any d-c circuit, we can apply Ohm's law to determine the values of voltage, current, and resistance, because the d-c voltage has a single, unchanging value.

In dealing with a-c circuits, however, this is not the case. A glance at the sine curve of Fig. 17-11 shows that every point on the curve has a value different from that of other points near it. We could determine the value at any one instant – which is called an *instantaneous* value – but this would not help

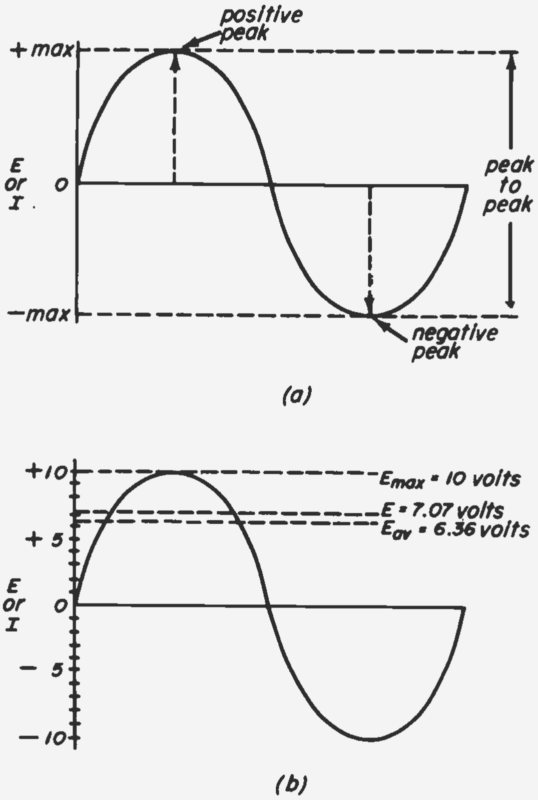

(a)

(b)

Fig. 17-11

in solving a circuit, because at the next instant the value changes again. An instantaneous value, then, might be anything from zero to the maximum value reached by the waveform at the positive and negative peaks.

Since the wave repeats itself indefinitely and always has the same shape, the positive and negative peaks will always reach the same height, so the *peak*, or *maximum* value, does not change. The maximum voltage of a waveform is abbreviated E_m, or E_{max}, and the current, I_m, or I_{max}. This maximum value is often referred to as the *amplitude* of the wave.

Figure 17-11*a* shows the maximum or peak values, and also the *peak-to-peak* value. This is simply the maximum positive value added to the maximum negative value without regard for polarity – the total *range* of values from peak to peak. It is often used in measuring complex or non-sinusoidal waveforms that have unequal positive and negative peaks.

These values are useful at times, but neither can be used to solve an a-c circuit. Another possibility is to take the average of all the instantaneous values during one alternation, which gives the *average* value of voltage or current for the positive *or* the negative alternations. The average value for either the positive or negative alternations of a sine-wave voltage or current equals 0.636 times the maximum value. The average value of voltage is usually abbreviated E_{av}, and the average value of current I_{av}. The average value of the sine-wave voltage in Fig. 17-11*b* is 6.36 volts.

But the average value for a *complete* cycle of a sine wave is always zero, because the negative and positive alternations are identical except in polarity. Therefore the average values for the two sets of alternations cancel out exactly. The average value is useful, however, in circuits containing only the positive or negative alternations of a sine wave, such as in half-wave and full-wave rectifiers.

In circuits where the whole a-c waveform is present, the best way to obtain a useful value is to establish a comparison with d-c. The amount of useful work done by an a-c voltage or current is called the *effective*, or *rms*, value. For a sine wave, this effective value equals 0.707 times the maximum value. In Fig. 17-11*b*, the effective value is 7.07 volts. In other words, if this a-c voltage were connected to a given resistance, the same amount of power could be delivered as by a steady d-c voltage of 7.07 volts applied to the same resistance. The same calculation applies in determining effective values of current.

If we know the effective voltage or current of a sine wave, we can find the maximum value by multiplying the effective value times 1.414.

When we speak of voltage or current values in a-c work, we mean the effective values unless we specifically say otherwise. These are designated E and I, without subscripts.

$$E = 0.707\ E_{max} \qquad I = 0.707\ I_{max}$$

17-3. INDUCTANCE

We have spoken of the principle of *induction:* the inducing of a voltage in any conductor that cuts across or is cut by magnetic lines of force. We also know that current flowing in a conductor causes a magnetic field to be formed around the conductor. The size and strength of the magnetic field is proportional to the amount of current flowing, and if the current changes the field changes accordingly.

When an alternating current is applied to a wire, the value of current changes constantly, and therefore the magnetic field about the wire varies in the same manner. This is shown in Fig. 17-12.

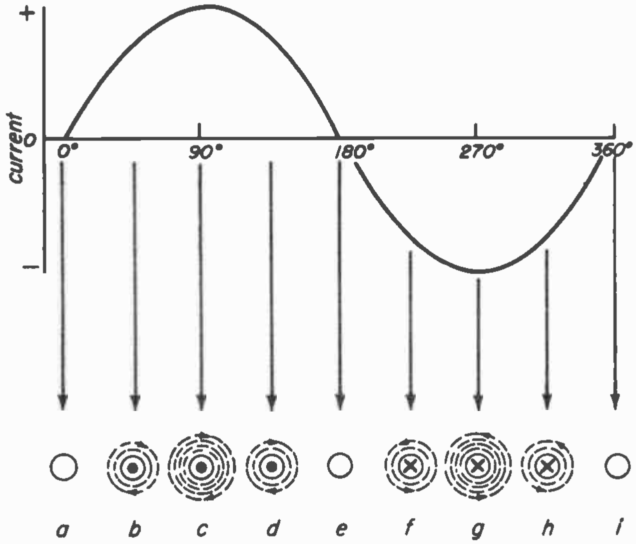

Fig. 17-12

At the beginning of a cycle, when the current is zero, there is no magnetic field around the wire, a cross-sectional view of which appears at *a*. At *b*, the current is building up and there is a small field around the wire. In the figure, a dot in the center of the conductor indicates that current is flowing in the direction of the reader; that is, out of the page. The direction of the flux lines depends upon the direction in which current is flowing in the wire. The current reaches its maximum strength at *c*, and the field, which has been expanding outward from the wire, reaches its greatest strength. Now the current begins to decrease and the field begins to collapse, as shown at *d*. Finally the current is again zero and there is no field about the wire, as at *e*. The sketches at *f*, *g*, *h*, and *i* show that the expansion and contraction of the field are repeated during the negative half-cycle, except that *the lines of force are in the opposite direction because the current has reversed* direction. The X in the center of the conductor indicates that the current is flowing away from the reader; that is, into the page.

Suppose we form this wire carrying an a-c current into a coil consisting of several closely spaced loops or turns. Now, as the current rises toward a peak the flux lines expanding from any one turn cut across the nearby turns, and a voltage is induced in those turns. As the current decreases, the flux lines from the one turn collapse and cut across the nearby turns *in the opposite direction,* inducing another voltage of the opposite polarity.

Each turn in the coil of wire is cut by flux lines from other turns. The induced voltages in all the turns add, forming a voltage across the whole coil. This self-induced voltage, which is called *counter emf* or *back emf,* is always opposite in polarity to the applied voltage and *always tends to prevent the current from changing.* If the current is decreasing, the back emf tries to keep it from decreasing; if the current is increasing, the back emf tries to prevent the increase.

This property of a circuit to generate a back emf that opposes any change in current flow is called *self-inductance.* The symbol for it is *L*. Inductance is measured in *henrys.* A coil has an inductance of one henry when a back emf of one volt is produced by a current *changing* at the uniform rate of one ampere per second. The coils used in most radio and TV circuits are much smaller than this. Their inductance is measured in *millihenrys* (1 millihenry = .001henry = 10^{-3} henry) and *microhenrys* (1 microhenry = .000001 henry = 10^{-6} henry).

In power supply circuits, on the other

hand, inductances of several henrys are required. These consist of many turns of wire, wound on iron cores. Iron conducts magnetic flux much better than air, and makes it possible to obtain more lines of force with a given current. Components possessing inductance are called *inductors*. Inductors are used in power supplies to smooth out variations in the current, which they do by opposing any current change. Used to minimize current variations in this way, they are called *chokes*.

If two or more coils are connected in series, far enough apart that the flux lines of one do not cut across the turns of another, the total inductance is the sum of the individual inductances. Thus the same formula as for resistors in series can be used to determine the total inductance:

$$L_{total} = L1 + L2 + L3 \ldots \text{etc.}$$

For coils connected in parallel, far enough apart to prevent flux lines of one from cutting the turns of another, the formula for resistors in parallel may be used; thus:

$$L_{total} = \cfrac{1}{\cfrac{1}{L1} + \cfrac{1}{L2} + \cfrac{1}{L3} \ldots \text{etc.}}$$

Voltage and Current in Inductors – We have said that the back emf across a coil is always opposite in polarity to the applied voltage. This means that they are 180° out of phase, so we can draw their waveforms as shown at *(a)* of Fig. 17-13, assuming that the applied voltage is a sine wave.

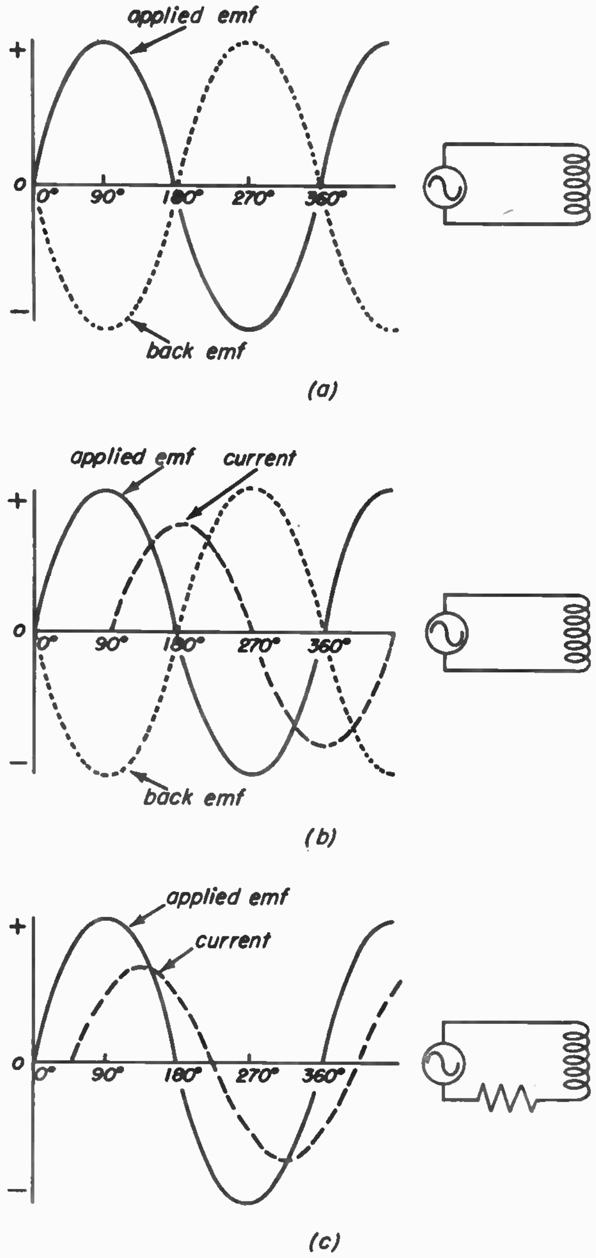

(a)

(b)

(c)

Fig. 17-13

From our study of the a-c generator we know that maximum voltage is induced when the flux lines are cut at the greatest rate. The rate at which flux lines cut the conductor depends upon the *rate at which the current changes*. Therefore, the current must be changing at the fastest rate when the induced voltage is maximum, and the current must be momentarily not changing when the induced voltage is zero.

The rate at which any current changes is indicated by the steepness of its waveform, and a sine wave is steepest as it passes through zero. This means the current must pass through zero at the instant when the induced voltage is greatest. Also, a sine-wave current is momentarily not changing when it reaches a peak. At this instant, it is neither increasing nor decreasing. So we must place our current peak at a point where the induced voltage is zero.

When we place the current waveform

according to these two conclusions, we have the arrangement shown in Fig. 12-13*b*.

The current in the coil is *lagging* the applied voltage by 90°. It is also leading the back emf by 90°, and the back emf is 180° out of phase with the applied voltage.

These are the conditions when a sine wave is applied to a circuit containing pure inductance and no resistance. However, there is no such thing as a pure inductance, since there is always some resistance in the wire with which the coil is wound. Introducing resistance causes the phase angle to decrease. The higher the value of resistance, the lower the phase angle becomes, so that in a practical circuit of this type the current would lag the applied voltage by a phase angle of somewhat less than 90°, as indicated in Fig. 17-13*c*.

When a voltage other than a sine wave is applied to an inductor, the waveform of the current usually is not the same as that of the applied voltage.

Inductive Reactance – Returning for a moment to the theoretically perfect inductance that contains no resistance, let's see what happens to the power applied to it.

Power is the rate of doing work. In a d-c circuit, when a current is forced through a resistance, electrical energy is converted to heat and we say that power is *dissipated*. That is, the power does not return to the battery or source of voltage. When an a-c source of voltage is connected to a resistance, the same thing happens. We even use the same formula:

$$P = I^2R$$

where P = power

I = effective current

R = resistance

When an a-c voltage source is connected to a pure inductance, however, a different situation is encountered. Power is delivered to the circuit as usual, current begins to flow, and a magnetic field builds up around each turn of the coil. The small fields around the turns add and make a field around the whole coil. Building up this magnetic field takes power from the circuit, *but the power is stored in the magnetic field*. It is not changed into heat or mechanical energy, as in a resistor or an electric motor.

When the current reaches its peak and begins to decrease, the magnetic field starts collapsing. The flux lines cut the turns of the coil, inducing a back emf that tends to keep the current flowing at its original rate. By this means the magnetic field returns all of its stored power to the circuit and it is returned to the source.

Power is constantly being sent into and returned from the inductance, but none of it is lost. *The average power is zero.*

The opposition that an inductance offers to the flow of current cannot be called resistance, since it consumes no power. This opposition effect is called *reactance*, and the unit is the ohm. The opposition of an inductance to the flow of current is *inductive reactance*, abbreviated X_L.

The formula for inductive reactance is:

$$X_L = 2\pi fL$$

where X_L = inductive reactance in ohms

f = frequency in cycles per second

L = inductance in henrys

π = 3.14

For example, suppose we want to find the inductive reactance that an 8-henry choke will offer if it is connected in a 400-cycle (sine-wave) circuit.

$$X_L = 2\pi fL = 2 \times 3.14 \times 400 \times 8 = 20{,}096 \text{ ohms}$$

The values used in the example are relatively large. In working with radio-frequency circuits, we can express the frequency in kilocycles and the inductance in millihenrys and obtain the correct answer in ohms, because the conversion factors cancel (kilocycles = cycles per second x 1,000, and millihenrys = henrys x 1/1,000). In the same way, we can use frequency in megacycles and inductance in microhenrys.

Notice in the formula that the *inductive reactance depends upon the frequency of the applied voltage.* This means that a coil has different values of reactance when voltages of different frequencies are applied. In the example given above, for instance, if we double the frequency of the applied sine-wave voltage, making it 800 cycles, the 8-henry choke offers twice as much inductive reactance:

$$X_L = 2\pi fL = 2 \times 3.14 \times 800 \times 8 = 40{,}192 \text{ ohms}$$

Therefore, a coil has the property of being *selective.* It can accept more current from a voltage at one frequency than at another. This frequency-selective property, improved by various methods, makes it possible to tune a TV receiver.

Practical circuits, of course, cannot contain a pure inductance, since some resistance is always present. The resistance of the wire is actually distributed throughout the coil, but its effect is the same as if a resistance were connected in series with a pure inductance. We can draw the circuit as shown in Fig. 17-14, where L represents the inductance and R the resistance *of a single coil.* Since resistance is present, some power must be dissipated, the amount depending upon the effective a-c current and the amount of resistance. If the coil shown in Fig. 17-14 has a reactance of 30 ohms and a resistance of 4 ohms when a sinusoidal voltage at a certain frequency is applied to it, and the effective current is 2 amperes, the actual power dissipation can be found by the formula:

$$P = I^2R = (2)^2 \times 4 = 4 \times 4 = 16 \text{ watts}$$

This is the amount of power taken from the a-c source and not returned. The power in the inductance is equal to I^2X_L, which in the example is 4 x 30 = 120, but this reactive power is simply transferred back and forth from the circuit to the magnetic field. It is not a loss. The reactive power is often referred to as *apparent* power, and the unit is the *volt-ampere,* so in our example the power in the inductance would be 120 volt-amperes.

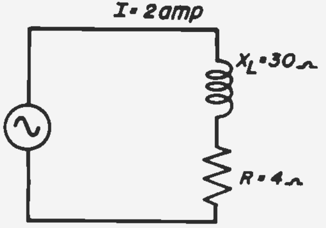

Fig. 17-14

In any a-c circuit containing resistance, the voltage drop across the resistor is *always* in phase with the current because $E = IR$. At the instant when the current reaches zero, the drop across the resistor is $0 \times R = 0$. When the current reaches its maximum value, the drop across the resistor is $I_{max} \times R = E_{max}$, the greatest possible voltage drop.

Also, in any a-c circuit containing resistance, the current lags the applied voltage by some phase angle of less than 90°. *The phase angle depends upon the relative values of resistance and reactance.* If the resistance is small with respect to the inductive reactance, the current lags the applied voltage by a large phase angle which approaches, but never reaches, the purely inductive lag of 90°. If the resistance is much larger than the inductive reactance, the resistive effect takes over and the current becomes more nearly in phase with the applied voltage, lagging by only a small phase angle. As long as both reactance *and* resistance are present, however, the current can never become exactly in phase with the applied voltage nor exactly 90° out of phase.

Q of a Coil – An ideal coil is one that contains no resistance. We know that in practice such a coil is unattainable. The relative merit of a coil can be expressed by a comparison of its reactance to its distributed resistance. The ratio of inductive reactance of a coil to its resistance, X_L/R, is known as the Q of the coil. It is sometimes referred to as the *figure* of *merit* of the coil. It might appear from the formula that Q would increase with frequency, since inductive reactance increases with frequency. However, as frequency increases, the distribution of current flow in a conductor changes, more of the current tending to flow along the outer surface of the conductor. This effectively decreases the cross-sectional area of the conductor, and results in greater I^2R (resistive) loss. Other high-frequency effects causing power losses also increase as the frequency is increased. Therefore, the Q of a coil remains relatively constant over a limited frequency range.

Mutual Inductance – We have seen that the small magnetic fields about the individual turns of a coil reinforce each other to create a large field around the whole coil, as shown in Fig. 17-15*a*. When an a-c voltage is applied to the coil, the field expands, contracts, and reverses direction according to the rate of current change. The moving flux lines cut the turns of the coil, inducing a back emf. If a *second* coil is brought sufficiently near, the moving lines of force will also cut the wires of the secand coil, inducing a voltage in that coil. A voltage appears in the second coil as a result of current flow in the first, as shown in Fig. 17-15*b*. This effect is called *mutual inductance*, and is measured in henrys. Coil #2 need not touch coil #1 physically, nor need it have any voltage applied directly to it. It may even be connected in an entirely separate circuit. All that is necessary is that it be near enough for lines of force from coil #1 to cut across its turns. The coil that has a voltage source connected to it (#1) is called the *primary;* the coil in which voltage is induced (#2) is the *secondary*. When two coils are placed close enough together to have mutual inductance, we say they are *coupled*.

The voltage induced in the secondary follows the same laws as the back emf induced in the primary. It is always opposite in polarity to the applied voltage and has the same frequency and waveform as the applied voltage.

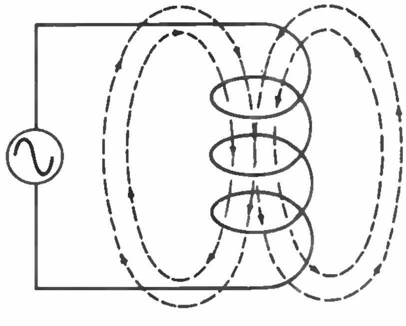
(a)

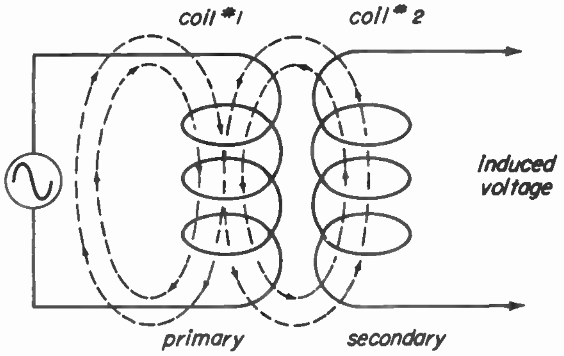

(b)

Fig. 17-15

The amount of mutual inductance depends upon the self-inductances of the two coils, their relative positions, and on whether the space between them is filled with air, iron, or some other material. Their relative positions are important because if the coils are very close together – *tightly coupled* – all or nearly all the flux lines from the primary cut across the turns of the secondary and the mutual inductance is high. If the coils are fairly far apart – *loosely coupled* – only a few flux lines cut the secondary and the mutual inductance is low. The degree to which the two coils are coupled is called the *coefficient of coupling*.

The highest possible coefficient of coupling is obtained when all the flux from the primary cuts the secondary. The coefficient for this condition is 1, or *unity*. Unity coupling is not easy to attain. We can come close to it by winding the two coils on a closed iron core. *Air-core coils*, which are wound on a tube-shaped insulating material like polystyrene or ceramic, may have a coefficient of coupling as high as 0.6 or 0.7 if one coil is wound over the other, but usually the coefficient is less.

If a resistance is connected across the open ends of the secondary coil, a current will flow through the resistance as a result of the induced voltage. When this occurs, power is dissipated in the secondary circuit and this means that *the primary inductance is no longer returning to the a-c source all the power delivered to it.* In other words, the power taken from the source in the primary circuit and not returned is now equal to the amount dissipated in the resistance of the primary circuit *plus* that dissipated in the resistance of the secondary circuit. Energy is *transferred* by the magnetic field from the primary circuit to the secondary.

Transformers – When two coils are coupled as described above, they become a *transformer*. By the use of a transformer, electrical energy can be transferred from one circuit to another without any direct connection. The transformer can be used only with a-c, of course, since no voltage is induced in the secondary unless the current in the primary is constantly changing.

One familiar example of a transformer that changes electrical energy from one voltage level to another is the doorbell transformer, which *transforms* 115-volt line voltage to about 6 volts. Another is the power transformer in a TV receiver, which changes 115-volt line voltage to a higher value, usually about 300 volts. If the secondary voltage level is higher than the primary, we say it is *stepped up*; if it is lower, the voltage is *stepped down*. In either case, *no more electrical energy can be taken from the secondary than is delivered to the primary*. In fact, less energy is available at the secondary because some is always lost in the transformer itself.

When a coil is placed in a varying magnetic field, the voltage induced in the coil is proportional to the number of turns in the coil. In a transformer, both coils are in the same field. The back emf induced in the primary is nearly equal to the applied voltage; the secondary voltage depends upon the *ratio* of turns on the secondary to turns on the primary. If the secondary has half as many turns as the primary, it will deliver half the applied voltage; twice as many turns, twice the applied voltage, and so forth.

We can calculate the voltage ratio by the formulas:

$$E_s = \frac{n_s}{n_p} E_p \quad \text{or} \quad E_p = \frac{n_p}{n_s} E_s$$

where E_s = secondary voltage

E_p = primary voltage

n_s = number of turns on secondary

n_p = number of turns on primary

For example, suppose that a TV power transformer, with 300 turns on the primary and 900 turns on the secondary, is connected to a 115-volt source. What is the secondary voltage delivered to the rectifier tubes of the receiver?

$$E_s = \frac{n_s}{n_p} E_p = \frac{900}{300} \times 115 = 345 \text{ volts}$$

Since the secondary cannot take more power than is delivered to the primary, for *practical* purposes (neglecting losses) we can say that the product of the primary voltage and current equals the product of the secondary voltage and current:

$$E_p \times I_p = E_s \times I_s$$

We can calculate the currents by the formulas:

$$I_s = \frac{n_p}{n_s} I_p \quad \text{or} \quad I_p = \frac{n_s}{n_p} I_s$$

In the voltage example given above, for instance, assume that the primary winding draws 1.2 amperes. What current does the secondary deliver?

$$I_s = \frac{n_p}{n_s} I_p = \frac{300}{900} \times 1.2 =$$

$$1/3 \times 1.2 = 0.4 \text{ amp}$$

In theory, any transformer can be turned around, using the secondary winding as the primary and vice versa. Actually, a transformer is usually designed for a particular application and reversing the windings might burn one out by subjecting it to too heavy a current.

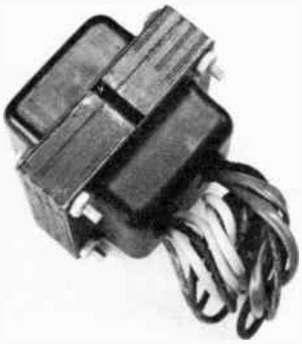

(a) Power Transformer

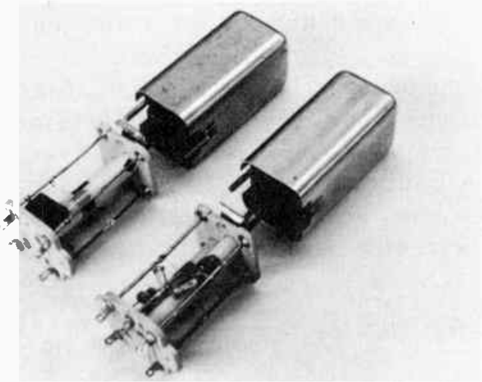

(b) I-F Transformers

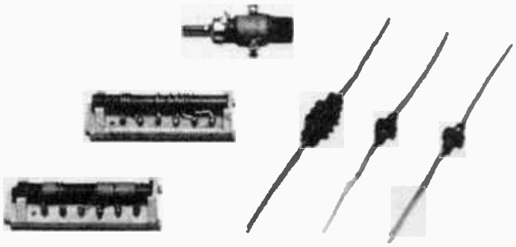

(c) R-F, I-F and Video Coils

Fig. 17-16

We will encounter transformers in most sections of TV receivers, for they are used at radio, audio, and power frequencies. The power transformer, and usually the sound-output transformer, are of the iron-core type already mentioned. Iron is a good conductor of magnetic lines of force, and helps to keep the field concentrated. Air-core transformers are often used in the i-f sections of receivers. Other i-f transformers have a *slug* of powdered iron inside their cores, which can be moved in or out to vary the mutual inductance. The principal effect of the iron slug is to change the *frequency* to which the transformer responds best, thereby *tuning* the circuit. Several types of transformers are shown in Fig. 17-16.

It is also possible to use a single winding with a connection or *tap* at some point between the ends as a transformer. This is called an *autotransformer*. Autotransformers are shown schematically in Fig. 17-17. They may have iron cores or air cores depending upon the purpose for which they are intended. Part of the winding is common to both primary *(line)* and secondary *(load)* circuits. Autotransformers are usually used where only a

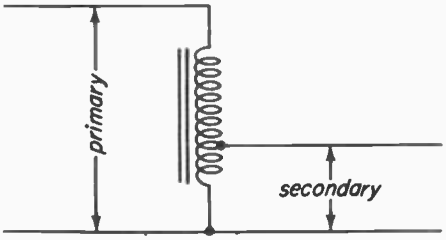

(a) step-down autotransformer

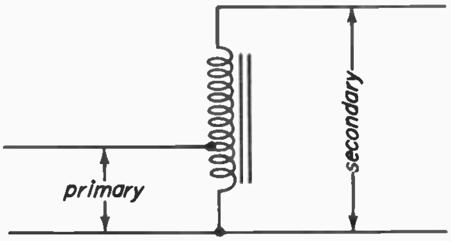

(b) step-up autotransformer

Fig. 17-17

small step-up or step-down of voltage is required.

Impedance Matching – An important use of transformers is that of impedance matching. Impedance is covered in greater detail in a subsequent section. For the present we may simply consider it as the resistance offered by circuit components to the flow of a-c current. It is represented by the letter Z, and is measured in ohms. Ohm's law can be applied to a-c circuits if R is replaced by Z; thus $Z = E/I$, $I = E/Z$, and $E = IZ$. Matching the impedance of a load to its source is frequently necessary, since maximum power can be transferred to the load only when the impedance of the load is equal to the impedance (or resistance) of the generator. This can be seen in Fig. 17-18 which shows a generator with an internal resistance, R_g, of 1,000 ohms, connected in series with a resistance, R_L, which represents the load. In *(a)* of the figure R_L is equal to R_g or 1,000 ohms. If the generator provides 200 volts, by Ohm's law the current is 0.1 ampere, and the power dissipated in R_L is 10 watts. This is the maximum power obtainable from the circuit. That this is so can be verified by trying values of R_L above and below that of the generator's internal resistance. In *(b)* of the figure, for instance, R_L is decreased to 500 ohms, and the power dissipated in R_L is 8.9 watts. In *(c)* of the figure R_L is increased to 1,500 ohms, and the power dissipated in R_L is 9.6 watts. From these examples, it can be seen that varying R_L either above or below the value of the generator's internal resistance results in a decrease in power. For maximum power transfer, therefore, the load resistance must be matched to the resistance of the generator or other power-supplying device.

How a transformer can act as an impedance-matching device is illustrated in Fig. 17-19, which shows a transformer with a 10:1 turns ratio, connected to a generator supplying 100 volts. Across the secondary is a resistance of 10 ohms. The generator is assumed to have zero resistance, and the transformer no losses.

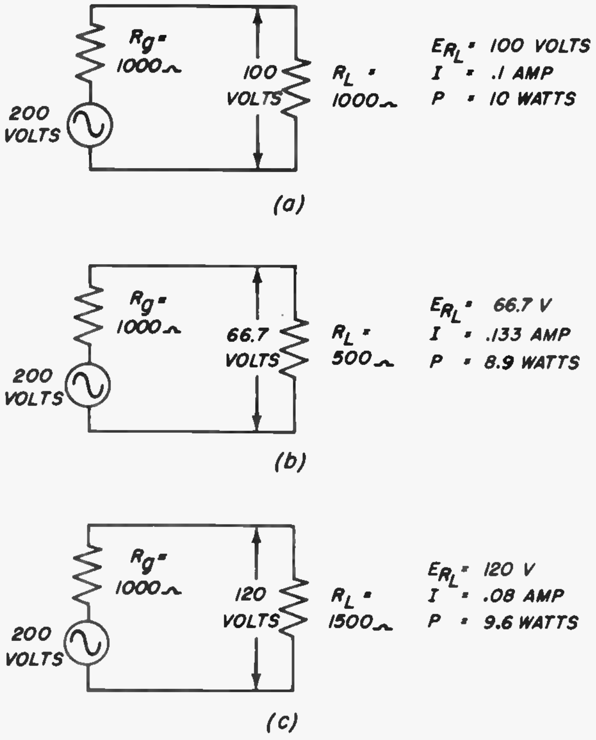

Fig. 17-18

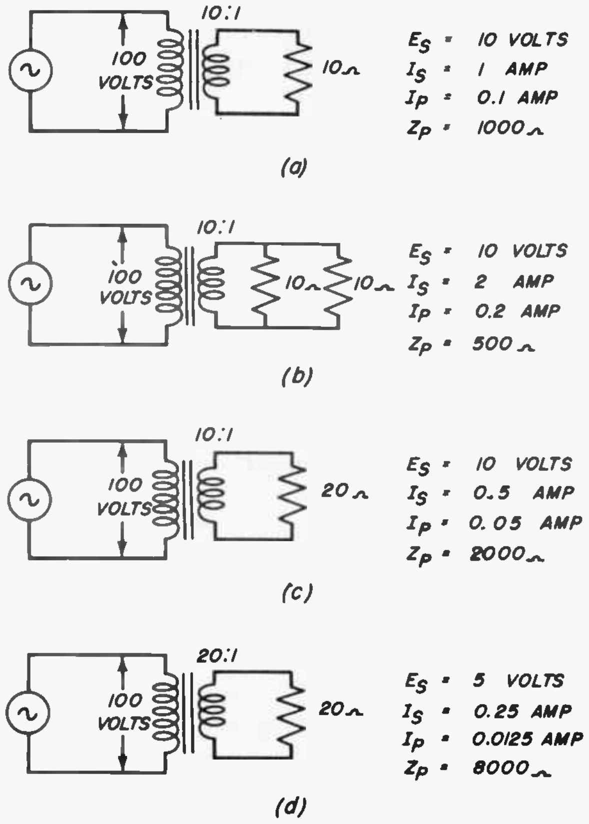

Fig. 17-19

Since the turns ratio is 10:1 and 100 volts appears across the transformer primary, a potential of 10 volts is developed across the secondary. By Ohm's law, the current flowing in the secondary must be 1 ampere. The current drawn by the primary must be 0.1 ampere since the current drawn by the primary equals the ratio of turns on the secondary to turns on the primary times the secondary current. Ohm's law for a-c circuits shows the impedance of the primary to be 1,000 ohms.

Now suppose the 10-ohm resistance of the secondary is paralleled by another 10-ohm resistance, as in *(b)* of the figure. The voltage across the secondary is still 10 volts, since neither the turns ratio nor the generator voltage has been changed. However, since the equivalent resistance is now only 5 ohms, 2 amperes must flow. The current flowing in the primary is 0.2 ampere. The impedance of the primary, therefore, must be

$$Z = \frac{E}{I} = \frac{100}{0.2} = 500 \text{ ohms}$$

If the secondary resistance is increased to 20 ohms, as in *(c)* of the figure, the current in the secondary becomes 0.5 ampere, the current in the primary 0.05 ampere, and the impedance of the primary 2,000 ohms.

It can be seen from these examples that the impedance of the primary varies directly with the impedance of the secondary. That is, an increase in secondary impedance causes an increase im primary impedance. We say that the secondary *reflects* impedance to the primary. The value of reflected impedance depends upon two factors: the impedance of the secondary and the turns ratio of the transformer. This is shown in *(d)* of Fig. 17-19, which illustrates a 20:1 transformer with a 20-ohm resistance across the secondary representing the secondary impedance. The voltage across the secondary is 5 volts, the secondary current is 0.25 ampere, the primary current is .0125 ampere, and the impedance of the primary is 8,000 ohms. Note that this primary impedance is 4 times that of the circuit in *(c)*, in which a 10:1 transformer was used.

The reflected impedance is equal to the impedance of the secondary times the square of the ratio of turns on the primary to the turns on the secondary. That is:

$$Z_p = \left(\frac{n_p}{n_s}\right)^2 \times Z_s$$

where Z_p is the impedance of the primary, Z_s is the impedance of the secondary, and n_p/n_s is the turns ratio.

By choosing a transformer with the proper turns ratio, therefore, it is possible to couple two circuits inductively, matching the load impedance to that of a generator or an electron tube, so that there is a maximum transfer of power. The required turns ratio can be found by the formula:

$$\frac{n_p}{n_s} = \sqrt{\frac{Z_p}{Z_s}}$$

where n_p/n_s is the turns ratio, Z_p is the impedance of the primary, and Z_s is the impedance of the secondary. If the impedance of the secondary is other than purely resistive, the calculation becomes more complex. However, in most cases it can be used in this form. As an example, suppose that the output of an amplifier is to be coupled to the voice coil of a loudspeaker. Assume that for best operation the tube should work into a plate load impedance of 4,000 ohms, and that the impedance of the voice coil is 10 ohms. The turns ratio required is found by:

$$\frac{n_p}{n_s} = \sqrt{\frac{Z_p}{Z_s}} = \sqrt{\frac{4{,}000}{10}} = \sqrt{400} = 20$$

Thus, if a 20:1 transformer is used, the 10-ohm impedance of the secondary will reflect a 4,000-ohm impedance to the primary, since

$$Z_p = Z_s \times \left(\frac{n_p}{n_s}\right)^2 = 10 \times 20^2 = 4{,}000$$

17-4. CAPACITANCE

Capacitance is the ability to store electrical energy in an electric field.

We know from the "D-C Electricity" lesson that an electric field exists between any two conductors separated by an insulating material, called the dielectric, when there is a difference of potential between the conductors. A pair of metal plates, separated by air, mica, or other dielectric, has the ability to store energy in this field when connected to a voltage source. Such a device is called a *capacitor.*

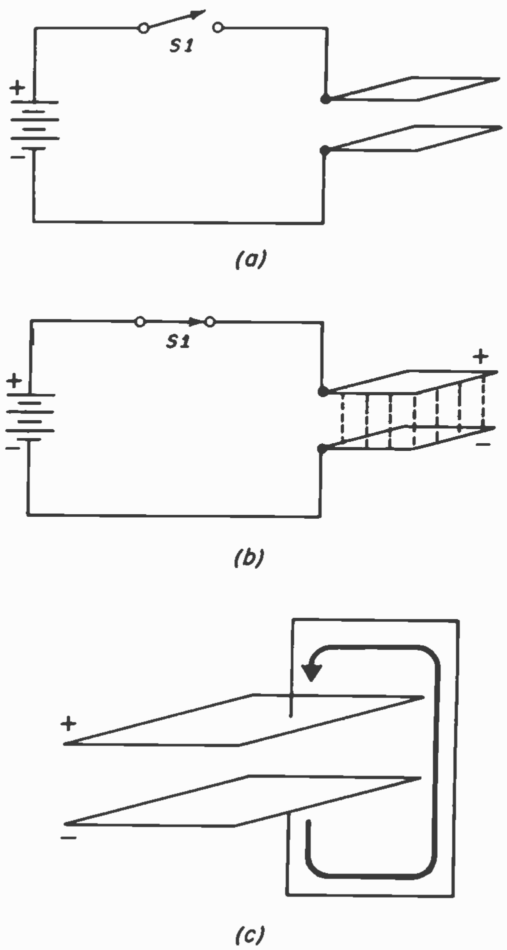

(a)

(b)

(c)

Fig. 17-20

Figure 17-20*a* shows a simple capacitor connected through a switch to a battery. When S1 is open, there is no potential difference between the plates and they are electrically neutral; there is no surplus or shortage of electrons on either plate. When S1 is closed, as in Fig. 17-20*b*, electrons are pulled from the upper plate to the positive battery terminal, creating a shortage, while a surplus of electrons builds up on the lower plate. This continues until the potential difference between the plates balances the battery voltage, which occurs almost instantly. Then the electron flow stops because of the open circuit between the capacitor plates. We say the capacitor is *charged.* With the capacitor charged, electrical energy is stored in an electric field between the plates, in much the same manner that energy is stored in the magnetic field of a coil. If S1 is now opened, disconnecting the battery, *the capacitor remains charged.* If we touch a wire to the capacitor plates, as shown at *(c)*, surplus electrons will flow from the negative plate to the positive until the balance is restored and they are again electrically neutral. Thus the capacitor becomes *discharged.* The discharge also occurs almost instantaneously.

Even though the capacitor is an open circuit to d-c, a current *does* flow briefly, but only during the charging and discharging periods.

The capacitance of a capacitor depends upon the size of the plates, the spacing between them, and the nature of the dielectric. Instead of using two very large plates to increase the capacitance, many smaller plates are usually stacked together, with alternate plates connected together in two sets. This is illustrated in Fig. 17-21. Such a stack of plates, made of metal foil, with thin sheets of mica dielectric between the plates, is

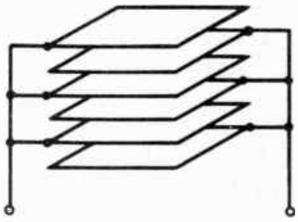

Fig. 17-21

placed in a plastic shell or case to make a *fixed* capacitor. If a paper dielectric is used, the stack of plates may be rolled into a cylinder and wax-coated.

The nature of the dielectric, or insulating material, has a considerable effect upon the capacitance. For instance, sliding a sheet of ordinary glass between the plates of the simple capacitor shown in Fig. 17-20 will increase its capacitance about 8 times. This is because glass is 8 times better than air as a dielectric. The ability of a material to support electric flux is called its *dielectric constant.* It is always measured with respect to air. Thus the glass mentioned above has a dielectric constant of 8. Mica, paper, some oils, and certain ceramics have fairly high dielectric constants and are widely used in commercial capacitors.

Capacitance is also affected by the spacing between the plates. The closer the spacing, the higher the capacitance. If the plates are too close together, however, a high difference of potential between them is likely to cause a breakdown of the insulating material, permitting a current to flow. If the dielectric is air, a visible arc will jump between the plates. A solid dielectric may puncture or char, leaving a permanent path for current to flow between the plates and making the capacitor useless.

The voltage at which a material breaks down is called the *puncture voltage*, or *breakdown voltage*, of that material. It varies for different dielectrics. Capacitors are marked with voltage ratings that indicate the highest voltage to which they may safely be subjected over long working periods. This *working voltage* should not be exceeded; if the capacitor is to be used with a-c or pulsating d-c, its rating should be greater than the *peak* voltage to be applied.

The unit of capacitance, *C*, is the *farad*. It is much too large for practical use, so capacitors are usually measured in *microfarads* (1 microfarad = .000001 farad = 10^{-6} farad) or *micromicrofarads* (1 micromicrofarad = .000001 microfarad = 10^{-12} farad). Three abbreviations are common for each:

Microfarad: *mf, mfd,* μf
Micromicrofarad: *mmf, mmfd,* $\mu\mu f$

Although the capacitance of a fixed capacitor is constant, the quantity of electrical energy it will store when connected to a given circuit depends upon *both* the capacitance and the applied voltage. With a large capacitance, less voltage is needed to place a given quantity of energy in the capacitor. With a fixed capacitance, increasing the applied voltage allows more energy to be stored in the capacitor.

Don't confuse the stored energy with the voltage drop across the capacitor plates. This voltage drop is usually what we're interested in. *When a capacitor is fully charged, the voltage drop across it equals (for practical purposes) the applied voltage.*

The total or equivalent capacitance of capacitors in parallel is found by adding the individual values. Thus $C_{total} = C1 + C2 \ldots$etc. For capacitors in series, the formula is:

$$C_{total} = \cfrac{1}{\cfrac{1}{C1} + \cfrac{1}{C2} \ldots \text{etc.}}$$

Capacitors in A-C Circuits — To see what happens when a capacitor is connected to a source of a-c voltage, suppose we consider a theoretical, perfect circuit containing pure capacitance and no resistance. This is shown in Fig. 17-22*a*. We know that the plates of the capacitor will become charged to the voltage supplied by the source. In a circuit that has no resistance this occurs instantly, so the voltage drop across the capacitor is always equal and opposite to the source voltage.

There can be no voltage drop across the capacitor plates, however, unless electrons are moved around the circuit to create a shortage on one plate and a surplus on the other. Thus a current must flow when a voltage is first applied to

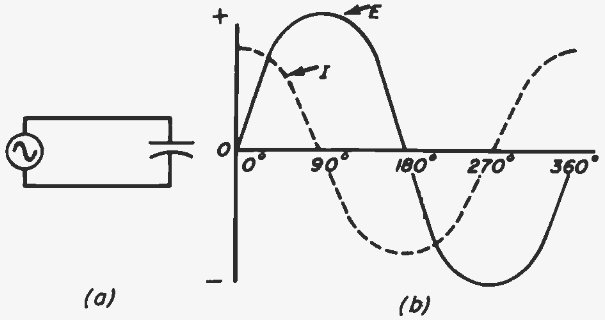

Fig. 17-22

the capacitor, and *whenever the applied voltage changes in value.* When the applied voltage is an a-c sine wave, which varies continuously, electrons must be always moving in one direction or the other to keep the voltage drop across the plates varying in step with the source. Thus when a capacitor is placed in an a-c circuit, a current flows, even though the same capacitor blocks the flow of steady d-c current.

The strength of the current that flows depends upon how fast the voltage changes. A few electrons flowing for a long time will change the voltage across the capacitor plates by a certain amount – but many more electrons must flow to do the same thing in a shorter time. By the same reasoning, more electrons must flow to produce a 10-volt change in 1/60th of a second than are required to produce a 6-volt change in the same period of time.

Figure 17-22*b* shows the sine curve of the voltage applied to the circuit at *(a).* In any sine curve the greatest *rate of change* occurs near the point where the curve passes through zero. At the beginning of the voltage cycle, then, the applied voltage starts increasing very rapidly in a positive direction. The voltage across the capacitor plates must change just as fast, so a large current flows as the capacitor begins to charge. The applied voltage continues to rise, but not so rapidly after the steepest portion of the curve is past. The change of voltage across the capacitor plates is slower, and less current flows, so that the current curve (dashed line) begins to drop off.

As the voltage approaches maximum, the rate of change becomes very small, and the current flow becomes progressively less. At the instant when the voltage reaches a peak there is no change, so at that instant no current flows and the current curve is at zero. The voltage drop across the capacitor is at maximum and the capacitor is *fully charged* – that is, it has taken all the energy it can get from this particular circuit, even though it might be capable of holding more. The energy absorbed by the capacitor is stored in the electric field between its plates.

After the peak, the source voltage begins dropping off, slowly at first, then more rapidly. The small voltage change again causes current to flow, but in the opposite direction, because the capacitor is now *discharging* and the current flows against the applied voltage. As the source voltage drops toward zero, the rate of change becomes greater, the capacitor discharges more rapidly, and the current becomes increasingly large. When the voltage reaches zero it is undergoing its greatest rate of change, so the current is maximum at the same instant. The capacitor is completely discharged and has given all its stored energy back to the source.

Now the source voltage reverses polarity, but current continues to flow in the same direction because the capacitor at the same instant begins charging again, this time to the opposite polarity. During the negative half-cycle of voltage, the current again follows the *rate* of voltage change and goes through a half-cycle curve of values similar to the first.

From the curves shown at *(b)* of the figure it can be seen that the current curve is also a sine wave and has the same *frequency* as the voltage. The current curve, however, begins its cycle 90° ahead of the voltage. When a sinusoidal voltage is applied to a pure capacitance, the current *leads* the voltage by a phase angle of 90°. No energy is dissipated in a pure capacitance; it is simply transferred back and forth between the circuit and the electric field.

When the applied a-c voltage is *not* a sine wave, the waveform of the current is different from the voltage waveform.

Capacitive Reactance – We have shown that the strength of the current in a capacitive circuit depends upon how fast the voltage varies – that is, on the frequency of the source voltage. It also depends upon the *capacitance*, since it is easier to place a given charge in a large storage space than a small one. The opposition offered by a capacitor to the flow of a-c current is a form of *reactance* because no power is dissipated. To distinguish it from the opposition offered by an inductor, it is called *capacitive reactance*, X_C. The unit of capacitive resistance is the *ohm*.

The formula for capacitive reactance is:

$$X_C = \frac{1}{2\pi fC}$$

where X_C = capacitive reactance in ohms

π = 3.14

f = frequency in cycles per second

C = capacitance in farads

As before, these values are very large, but expressing the frequency in megacycles and the capacitance in microfarads will also give a value of capacitive reactance in ohms. If the capacitance is in micromicrofarads, move the decimal point six places to the left to convert to microfarads

(90 mmf = 0.000090 mf).

As an example, suppose we want to find the opposition offered by a 12-mf capacitor when it is connected in a 400-cycle sine-wave circuit.

Then:

$$X_C = \frac{1}{2\pi fC} = \frac{1}{2 \times 3.14 \times 400 \times 0.000012} = \frac{1}{0.03} = 33.3 \text{ ohms}$$

The capacitive reactance depends upon the frequency of the applied voltage, as does inductive reactance, but with this important difference: increasing the frequency *decreases* the capacitive reactance. A capacitor, like a coil, is selective toward currents at various frequencies. Unlike a coil, it lets high-frequency currents flow more easily than those of low frequencies. Energy is constantly transferred back and forth between the electric field of the capacitor and the source. This apparent power, expressed in volt-amperes, can be calculated by the formula: I^2X_C.

RC Circuits – So far we have considered theoretical, pure capacitors. Suppose we connect a resistor in series with a capacitor, as shown in Fig. 17-23. Such a circuit is called an *RC* circuit. The presence of resistance in an RC circuit causes the current to lead the voltage by less than 90°. The phase angle depends upon the values of resistance and reactance. If the reactance is large compared to the resistance, the phase angle may be nearly 90°. If the resistance is large compared to the capacitive reactance, the phase angle is closer to 0°, and the current is more nearly in phase with the voltage.

Fig. 17-23

Losses in Capacitors – There is always some resistance in capacitors, due to the resistance of the wire leads and the plates. In addition, no dielectric in common use is a perfect insulator. Current flow through the resistance of the dielectric, wire leads, and plates results in some dissipated power. This power loss is dependent upon the effective a-c current flowing in the circuit and the value of resistance. However, losses in well-made capacitors are negligible. Since the resistance of a capacitor is usually quite small, it is not ordinarily drawn separately on schematic diagrams, and it is necessary to remember that some resistance may be present.

17-5. TIME CONSTANTS

An important application of inductors and capacitors is in circuits that make use of the time required for a current or voltage to reach a certain value. These may be *RC* circuits, made up of resistance and capacitance, or *RL* circuits, made up of resistance and inductance.

An *RC* circuit is illustrated in Fig. 17-24. At the instant the switch is moved to position one, as in *(a)* of the figure, the entire battery voltage appears across the resistor *R*. Current begins to flow, charging the capacitor in the polarity shown. The charge built up on the capacitor tends to oppose the applied voltage, and as the charge on the capacitor increases, the current gradually decreases. When the charge on the capacitor equals the source voltage, the voltage drop across *R* is zero and current ceases to flow. The time required for the capacitor to charge to 63.2 percent of its maximum voltage can be found by the formula $t = RC$, where t is the time constant in seconds, *R* the resistance in ohms, and *C* the capacitance in farads. It is often more convenient to express *R* in megohms and *C* in microfarads, in which case t is still in seconds. Thus, in the circuit of Fig. 17-24*a*, $t = RC = 0.5 \times 2 = 1$ second. If 1,000 volts is applied when the switch is closed, in 1 second the voltage across the capacitor will increase to 63.2 percent of its maximum value, or 632 volts. Note that the time constant refers to a *percentage* of the maximum voltage, so that the formula holds true for any value of applied voltage. If 100 volts were applied to the same circuit, for instance, in 1 second the capacitor would become charged to 63.2 volts. Note also that the voltage across the resistor decreases as that across the capacitor increases, so that in 1 second the voltage across *R* would be 36.8 percent of the source voltage.

Frequently it is necessary to know the time required for the capacitor to charge completely; that is, to the maximum or source voltage. This time is, for all practical purposes, five times the time constant. Thus in 5 x *RC* seconds, the full source voltage would appear across the capacitor, and zero volts across the resistor.

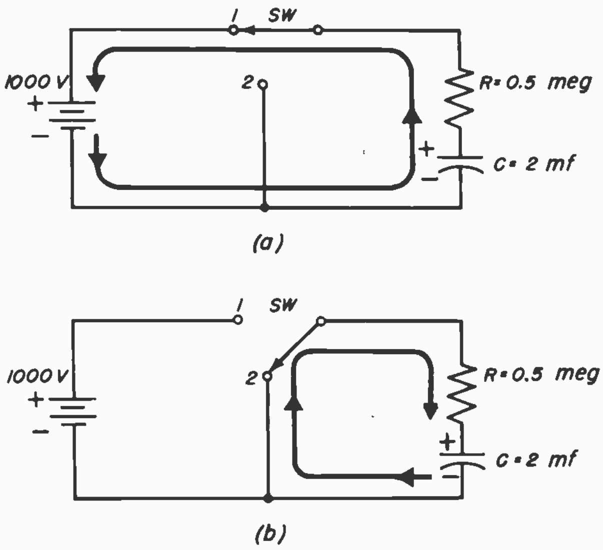

(a)

(b)

Fig. 17-24

If the switch is now moved to position 2, as in *(b)* of the figure, the capacitor begins to discharge through *R*. The time required for the energy stored in the capacitor to decrease to 36.8 percent of its maximum value is *RC* seconds; with values given and assuming that *C* is fully charged to 1,000 volts, in 1 second the voltage across *C* would drop to 368 volts. In 5 x *RC* seconds, it would for all practical purposes drop to zero.

An *RL* circuit is illustrated in Fig. 17-25. When the switch is moved to position 1, current begins to flow. The changing current causes a back emf of the polarity shown to be developed in inductor *L*, opposing the applied voltage and attempting to prevent the current from reaching its maximum value. From Ohm's law, the maximum current is equal to the voltage divided by resistance. The time required for the current to reach maximum value depends upon the values of *R* and *L*; the larger the inductance or the smaller the resistance, the more time is required. The time constant of the circuit may be found by the formula: $t = L/R$, where t is the time constant in seconds, L the inductance in henrys, and R the resistance in ohms. Thus for the values of R and L in Fig. 17-25*a*, $t = L/R = 10/20 = 0.5$ second. If an emf of 100 volts is applied when the switch is closed, the final or maximum current will be $I = E/R = 100/20 = 5$ amps. In 0.5 second the current will reach 63.2 percent of this value, or 3.16 amps. If the only resistance in the circuit is that of R, the voltage across R must at all times equal the current in the circuit times R, and the voltage drop across R increases at the same rate as the current. The time required to reach 63.2 percent of maximum can therefore be found by the same formula: $t = L/R$. In 0.5 second, then, the voltage drop across R will be 63.2 volts.

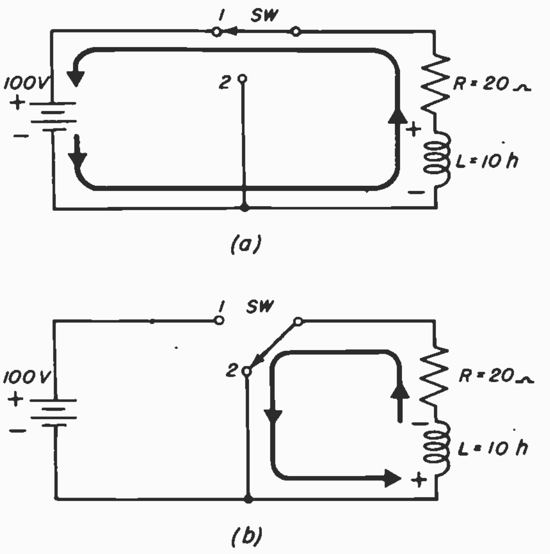

(a)

(b)

Fig. 17-25

Now suppose the switch is moved to position 2, as in *(b)* of the figure. The magnetic field of the coil collapses, and this reverses the voltage across the coil, as shown. This self-induced voltage causes a current flow, which is dissipated in the resistance. In this case, the time-constant formula indicates the time required for the voltage and current to decrease 63.2 percent. That is, in L/R seconds the voltage and current will drop to 36.8 percent of their maximum values. For the values given, assuming that the maximum current of 5 amperes is flowing, in 0.5 second the current would drop from 5 amperes to 1.84 amperes, and the voltage from 100 volts to 36.8 volts.

For all practical purposes, the current in an LC circuit will build up to maximum or decrease to zero in five times the time constant, or 5 X L/R.

A typical application of time constants is illustrated in Fig. 17-26, which is a diagram of a simple AVC circuit. Part of the rectified output of the detector is passed through a resistance-capacitance network consisting of R and C and fed to the grids of the r-f and i-f stages, to counteract variations in input signal strength and provide a constant signal voltage output. To do this, the AVC bias must not respond to audio variations, but must follow changes in over-all signal strength. Therefore, the filter components are so chosen that even the lowest-frequency audio variations cause little change in the charge on C, while much slower variations such as those from fading signals change the amount of charge and thus the bias. Typical values might be 2 megohms for R and 0.05 mf for C. In this case, the time constant of the AVC filter circuit would be 0.1 second. It would thus require 0.1 second, assuming a constant-voltage signal, to charge the capacitor to 63.2 percent of its final charge, and 5 x 0.1 or .5 seconds to charge it completely. An audio signal of, for example, 100 cycles, completes one cycle in 1/100 second, and current flows only during the positive half-cycle, or for 1/200 second. Changes at an audio rate, therefore, would not appreciable alter the charge on the capacitor. Variations in signal strength remaining constant for 1/4 second or so, however, would increase or decrease the charge on the capacitor, and develop a corresponding value of AVC bias. Note that if the time constant were made too long (by larger values of C or R), the circuit might not respond rapidly enough to sudden changes in signal strength.

Bypass Capacitors – Bypass capacitors are often used to allow alternating

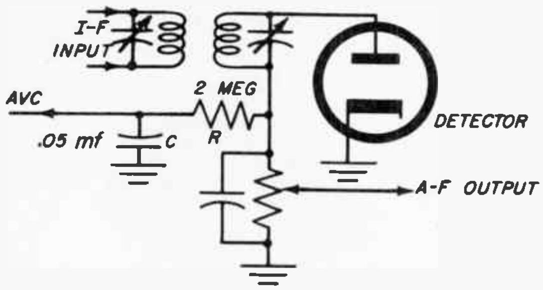

Fig. 17-26

currents to flow around circuit components that are carrying direct current. For instance, consider Fig. 17-27 which is part of a typical audio-amplifier stage. Direct current, flowing through *R*, provides a voltage drop that is necessary for proper operation of the tube. However, a-c signal currents are also flowing in the circuit. The voltage drops across *R* produced by the a-c currents are often undesirable.

We can cause the a-c signals to flow around, or *bypass*, the resistor by placing a capacitor of the proper value in parallel with it, as in *(b)* of the figure. Since the capacitor offers infinite resistance to d-c, the d-c continues to flow through the resistor. To a-c, however, the capacitor looks like a relatively small reactance, and most of the a-c signal flows through it rather than the resistor.

For example, the capacitive reactance of the 10-mf capacitor at 2,000 cps is:

$$X_C = \frac{1}{2\pi f C} = \frac{1}{2 \times 3.14 \times 2{,}000 \times 10 \times 10^{-6}} =$$

$$7.9 \text{ ohms}$$

Hence, the a-c voltage drop will be small across this small reactance, while the d-c voltage drop across the resistance will be relatively high. Effectively, the a-c component is by-passed around the resistor.

Coupling Capacitors – Capacitors are often used as parts of coupling circuits between stages of a receiver. In such applications they block the flow of d-c from the plate of one tube to the grid of the next, but allow a-c signals to pass. This is illustrated in Fig. 17-28.

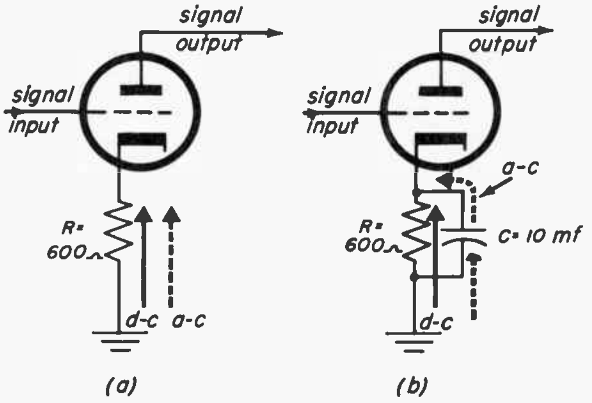

Fig. 17-27

The current flow from tube V1 includes d-c from the 300-volt plate supply and an alternating component that represents the signal. A pulsating d-c voltage is developed between plate and ground. The a-c component of the pulsating d-c voltage must be fed to the grid of V2. However, if the d-c voltage were allowed to reach the grid of V2, the tube would not operate properly.

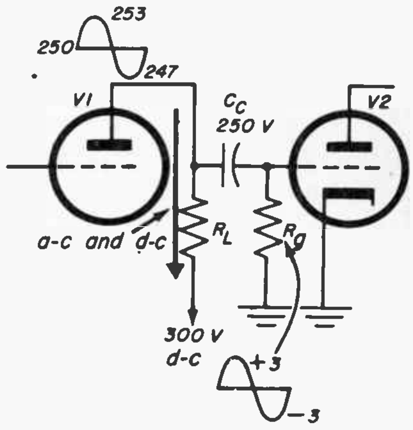

Fig. 17-28

The d-c component is therefore blocked by the addition of capacitor C_c. At the same time, the a-c component passes readily through the low reactance of C_c. Used in this way, C_c is called a *d-c blocking* or *coupling capacitor,* since it *blocks* d-c from the grid of V2 and *couples* the a-c signal variations from stage to stage.

In the figure, the average d-c plate voltage is +250 volts with respect to ground. The a-c component is 6 volts peak-to-peak, and causes the plate voltage to vary between +247 and +253 volts. Appearing across C_c is the d-c component of the pulsating plate voltage or +250 volts. Across R_g is the desired a-c signal of 6 volts peak-to-peak.

Typical Capacitors. – Just as coils may be wound in many different ways and still possess inductance, so may capacitors be of many forms. Some are shown in Fig. 17-29. We have already described the two most common types of fixed capacitors – paper and mica – and the basic design is the same for most others. In television work, involving very-high and ultra-high frequencies, very small capacitance values are used in the signal circuits. Therefore *button* or *disc* capacitors may be employed. These are normally made with a small button-shaped dielectric of a special ceramic. Two silver plates are fired to the ceramic, one on each side, a lead is soldered to each plate, and the plastic case is put on and sealed against moisture. Surprisingly high values of capacitance are obtained with only the two small plates, due to the high dielectric constant of the ceramic. One such ceramic, for instance, is titanium dioxide, with a dielectric constant of 85, as compared with that of mica, which is 7.

One other distinctive type of fixed capacitor, usually encountered in power-supply circuits, is the *electrolytic*. This ordinarily consists of large aluminum-foil plates rolled up in a sealed case containing a semiliquid chemical compound. When a d-c voltage is applied to the plates, current starts to flow through the liquid, but almost instantly an electrochemical action forms an oxide film on the plates, creating a very thin dielectric. The unit then acts like a normal capacitor, and the d-c current is blocked. The film dielectric is so much thinner than any solid dielectric that very large values of capacitance are obtained with relatively small plate areas. The so-called *dry* electrolytic capacitors contain a paste instead of a liquid.

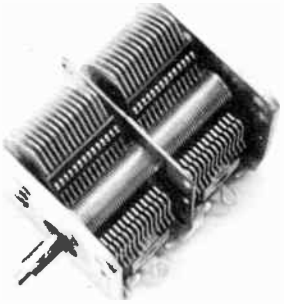

(a) Variable Capacitor

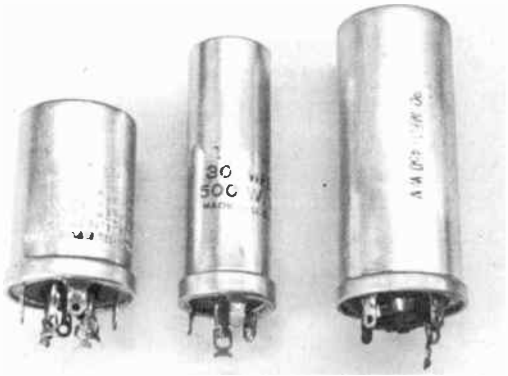

(b) Electrolytic Capacitors

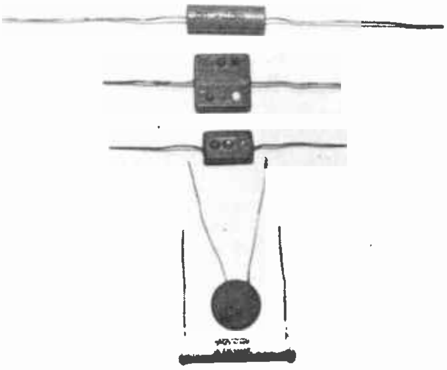

(c) Fixed Capacitors

Fig. 17-29

Another form of capacitor is the *variable*, the capacitance of which may be changed within a certain range. Variable capacitors nearly always use air as the dielectric. The tuning capacitors found in broadcast radios and many other devices employing frequencies lower than those of TV consist of two sets of rigid metal plates, more or less semicircular, arranged so that the movable set can be turned into the spaces between the fixed plates. This type is illustrated in Fig. 17-29. When the plates are fully meshed, maximum capacitance is obtained. When the movable plates are turned as far as possible away from the fixed set, the capacitance becomes minimum. A common type of broadcast receiver tuning capacitor has a maximum capacitance of 365 mmf. The minimum capacitance depends upon the design, and may be from 10 mmf to 40 mmf.

One other frequently encountered variable capacitor is called a *trimmer* or *padder*. Two small metal plates are mounted on a piece of insulating material, the lower plate fixed to the base and the upper held by spring tension against a setscrew which adjusts the spacing between the plates. Turning the setscrew to bring the plates closer together increases the capacitance; allowing them to move apart reduces it. A piece of mica is fixed between the plates. It is primarily to prevent them from touching, although it also increases the breakdown voltage and acts as additional dielectric.

17-6. OHM'S LAW FOR REACTIVE CIRCUITS

We have discussed the formulas for both inductive and capacitive reactance. In circuits that contain reactance only we can substitute the reactance for resistance in the Ohm's law formulas. (Resistance will always be present in any coil or capacitor, as we have stated, but at frequencies below a few megacycles the resistance is usually so small it can be disregarded.) Forms of Ohm's law for reactive circuits are:

$$E = IX$$

$$I = \frac{E}{X}$$

$$X = \frac{E}{I}$$

where X = reactance (inductive or capacitive)

E = *effective* sine-wave a-c voltage

I = *effective* sine wave a-c current

For example: Suppose we connect a 0.1-mf capacitor to a 115-volt, 400 cycle, a-c source. What current will flow? First, we find the capacitive reactance:

$$X_C = \frac{1}{2\pi fC} = \frac{1}{2 \times 3.14 \times 400 \times 0.0000001}$$

$$= \frac{1}{0.00025} = 4{,}000 \text{ ohms}$$

This value is substituted in the Ohm's law equation:

$$I = \frac{E}{X} = \frac{115}{4000} = 0.029 \text{ ampere or 29 milliamperes}$$

This is the effective current that will flow. For most practical purposes we would again ignore the very small resistance and say that the current leads the voltage by a phase angle of 90°.

For a circuit such as that shown in Fig. 17-30*a*, with a capacitance in series with an inductance, we must have some means of calculating the total reactance. Disregarding resistance, we know that the current in the circuit lags the voltage across the coil and leads the voltage across the capacitor – by 90° in each case. Therefore, there is a phase difference between these two voltages of 90° + 90° = 180°. The voltage of the coil starts a positive half-cycle at the instant the voltage of the capacitor starts a negative half-cycle and vice versa. The total voltage across the circuit at any instant, then, must be equal to the instantaneous difference between them, as shown in the graph of Fig. 17-30*c*. In this example, E_L is larger than E_C, *so the resultant voltage*, E_{tot}, is in phase with E_L. The circuit acts as if it contained only an inductive reactance somewhat smaller than the actual X_L. The smaller X_C is cancelled out by part of the X_L, and the remainder determines the total voltage across the combination, and the current.

If the voltage across the capacitor had been larger than the coil voltage, the inductive reactance would have been

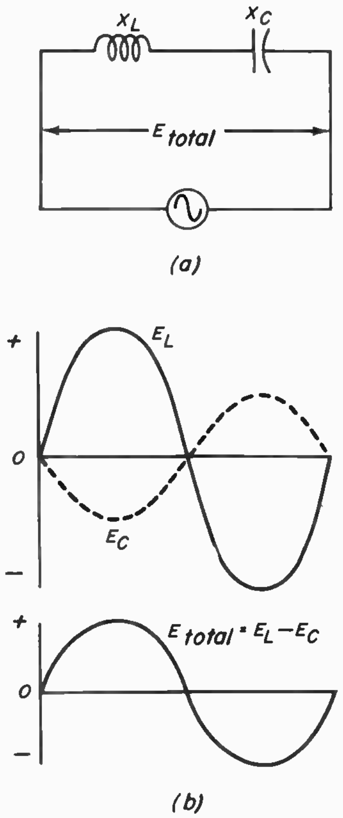

Fig. 17-30

cancelled out. E_{tot} would have been in phase with the capacitor voltage and the circuit would have behaved as if nothing but capacitance were present.

The total effective reactance in the circuit is always the *difference* between the inductive and the capacitive reactances.

$$X = X_L - X_C$$

For example, in the circuit of Fig. 17-30, if X_L is 300 ohms and X_C is 200 ohms, the total reactance will be 300 − 200 = 100 ohms of inductive reactance. If the applied voltage is 115 volts, the effective current in the circuit is:

$$I = \frac{E}{X} = \frac{115}{100} = 1.15 \text{ amp.}$$

Since inductive and capacitive reactances have opposing phase angles, they always cancel when connected in series. If the result is inductive, the current lags the voltage by 90°; if it is capacitive, the current leads the voltage by 90°. An inductive reactance is said to have a *positive phase angle*, or to be a *positive reactance*. Capacitive reactance is referred to as *negative reactance*, and is said to have a *negative phase* angle.

17-7. IMPEDANCE

We know that Ohm's law applies to an a-c circuit containing nothing but resistance, and we have just learned how to modify it for a circuit containing reactance only. In most radio and television circuits, however, resistance is combined with one or both kinds of reactance. Simply adding the resistance and reactance does not give the correct total opposition to current flow because of the different phase angles. We have already talked about *RL* and *RC* circuits and have seen how the amount of resistance in a circuit, compared with the amount of reactance, can vary the phase angle from nearly zero to nearly 90° of lead or lag.

When resistance and reactance are both present in an a-c circuit, the total opposition to the flow of current is a special combination of the two and is called the *impedance*. Impedance is measured in ohms. The symbol is Z.

In a series circuit, such as that in Fig. 17-31*a*, we still find the total *reactance* by taking the difference between X_L and X_C, because the voltage drops across the coil and capacitor are always 180° out of phase. To find the *impedance*, however, we must add the values of reactance and resistance in such a way as to take into account the 90° phase difference between the voltage drop across the resistance and that across each reactance.

We can find the impedance of a circuit graphically, by plotting the net reactance against the resistance. This is shown for the circuit of Fig. 17-31*a* in *(b)* of the figure. First, we draw the resistance, 3 ohms, to a suitable scale. Then, using the same scale, we plot the

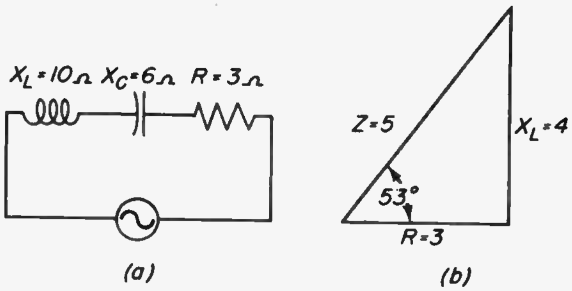

(a) (b)

Fig. 17-31

net reactance - in this case, 10 – 6 ohms equals 4 ohms. In this circuit the net reactance is inductive, since X_L is larger than X_C. Since the reactance is inductive, the current through it must lag the voltage across it by 90°. However, the current through the resistance is in phase with the voltage across it, as it is in any circuit. Thus the voltage drop across the reactance is 90° out of phase with the voltage drop across the resistance. We take this into account by drawing the reactance line at a 90° angle to the resistance line.

Now, if we connect the two lines to form a right triangle, the line opposite the 90° angle – called the *hypotenuse* of the triangle – gives the value of impedance, Z. In this case, measuring the hypotenuse shows that the impedance is 5 ohms.

The *impedance triangle* also gives another important piece of information. The angle between R and Z is the phase angle between the voltage and the current in the circuit. In this case, it is about 53°.

It would be possible to draw the impedance triangle to scale, measure the hypotenuse with a ruler and the phase angle with a protractor and thus solve nearly any circuit. However, it is easier to use a formula. The formula for impedance is:

$$Z = \sqrt{R^2 + X^2} \text{ or } Z = \sqrt{R^2 + (X_L - X_C)^2}$$

All values are in ohms.

We find the impedance of the circuit in Fig. 17-31 by simply substituting in the formula:

$$Z = \sqrt{R^2 + (X_L - X_C)^2} = \sqrt{(3)^2 + (10-6)^2} =$$

$$\sqrt{(3)^2 + (4)^2} = \sqrt{25} = 5 \text{ ohms}$$

If it becomes necessary to find the exact phase angle, we can use trignometric tables, which may be found in almost any mathematics book. The tangent of the phase angle is X/R: we can substitute values and find the result in the tables. In Fig. 17-31 the tangent equals $X/R = 4/3 = 1.33$; the angle having this tangent is about 53°. Hence the current in the circuit will lag the applied voltage by this amount.

If the values of X_L and X_C in Fig. 17-31*a* were reversed, the capacitive reactance would predominate. The resulting impedance value would be the same and so would the phase angle, but the current would *lead* the applied voltage by 53°.

In certain special cases it is not necessary to go through the impedance calculation. When either X or R is more than 10 times the other quantity, the impedance is practically equal to the larger of the two. Thus, for example, if $X = 100$ ohms and $R = 10$ ohms, we can assume that $Z = 100$ and not be wrong by more than ½ of 1 percent (the actual value is 100.5 ohms).

Since reactance changes as frequency changes, impedance must also vary with frequency. If the impedance consists mostly of reactance, the impedance will change almost as fast as the reactance, but if the resistance is much larger than the reactance, the impedance change will be very slow.

Occasionally we may find series circuits containing several resistors and more than one coil or capacitor. The impedance is still easy to calculate. Simply add all the resistances to find the total R, then add all the inductive reactances and all the capacitive reactances separately and use the difference between the totals in the formula. *Reactances in series* always add, just like resistances, but remember to add inductive and capacitive reactances separately.

Ohm's Law for Impedance – Since impedance is the total opposition to the flow of a-c current, and since it takes phase differences into account, we can substitute impedance for resistance in the Ohm's law equations and obtain a true solution of a-c circuits.

$$E = IZ$$

$$I = \frac{E}{Z}$$

$$Z = \frac{E}{I}$$

where Z = impedance in ohms

E = effective voltage in volts

I = effective current in amperes

As an example of the application of these formulas, we can use the circuit of 17-31*a*. We calculated that the impedance of this circuit was 5 ohms. If we assume that a sine-wave voltage of 20 volts *rms* (effective) is applied, the current in the circuit must be:

$$I = \frac{E}{Z} = \frac{20}{5} = 4 \text{ amperes}$$

This is the effective current. It flows through all the components in the circuit. By again applying Ohm's law, we can determine the voltage drop across each component:

Across the resistor: $E = IR = 4 \times 3 = 12$ volts

Across the capacitor: $E = IX_C = 4 \times 6 = 24$ volts

Across the coil: $E = IX_L = 4 \times 10 = 40$ volts

Notice that the voltage drop across the coil is twice the applied voltage. In a-c circuits containing inductance and capacitance the voltage drops across the reactances are often many times the applied voltage, since these voltage drops are dependent only upon the line current and the values of the reactances. At any point in time, however, the sum of the instantaneous voltage values equals the voltage applied to the entire circuit.

No power is dissipated by the reactive voltage drops, since energy is simply transferred between the electric field of the capacitor and the magnetic field of the coil.

Impedance in Parallel Circuits – To determine the impedance of simple parallel circuits, a different technique must be used. Suppose, for example, we want to find the impedance of the circuit of Fig. 17-32.

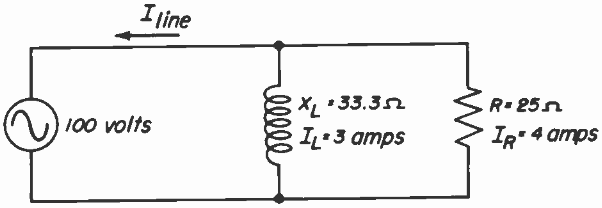

Fig. 17-32

In this case we use Ohm's law for impedances, $Z = E/I$, where

Z = impedance of the circuit in ohms

E = applied voltage in volts

I = line current in amperes

To calculate the line current, we must take into account the difference of phase of the branch currents. The line current may be found by the formula:

$$I_{line} = \sqrt{I_R^{\,2} + (I_L - I_C)^2}$$

For the circuit in Fig. 17-32, then, the line current is:

$$\sqrt{(4)^2 + (3)^2} = \sqrt{25} = 5 \text{ amps}$$

The circuit impedance is: $Z = E/I = 100/5 = 20$ ohms

Figure 17-33 illustrates impedance

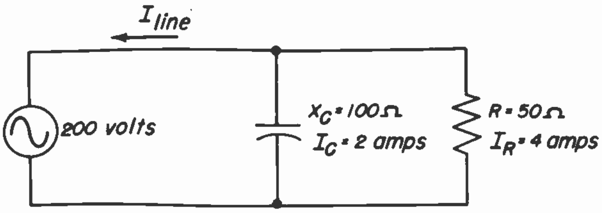

Fig. 17-33

calculation for a parallel circuit made up of resistance and capacitance.

$$I_C = \frac{200}{100} = 2 \text{ amps}$$

$$I_R = \frac{200}{50} = 4 \text{ amps}$$

$$I_{line} = \sqrt{(4)^2 + (2)^2} = 4.47$$

$$Z = \frac{200}{4.47} = 44.7 \text{ ohms}$$

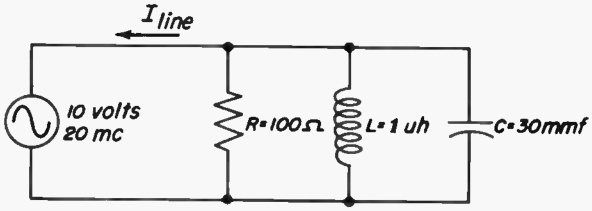

Fig. 17-34

Figure 17-34 illustrates still another case, in which resistance, inductance, and capacitance are connected in parallel. Note that in this case, since only *L* and *C* are given, the inductive and capacitive reactances at the frequency of the applied voltage must be found before the line current can be determined.

$$X_L = 2\pi fL = 126 \text{ ohms}$$

$$X_C = \frac{1}{2\pi fC} = 266 \text{ ohms}$$

$$I_C = \frac{10}{266} = .037 \text{ amp}$$

$$I_L = \frac{10}{126} = .08 \text{ amp}$$

$$I_R = \frac{10}{100} = .1 \text{ amp}$$

$$I_{line} = \sqrt{(0.1)^2 + (.08 - .037)^2} = \sqrt{.012} = .11 \text{ amp}$$

$$Z = \frac{10}{.11} = 90.9 \text{ ohms}$$

◆

NOTES

NOTES

NOTES

TELEVISION SERVICING COURSE

PREPARED BY

RCA INSTITUTES, INC.
A SERVICE OF RADIO CORPORATION OF AMERICA

HOME STUDY DEPARTMENT
350 West 4th St., New York 14, N. Y.

LESSON 18

RESONANT CIRCUITS

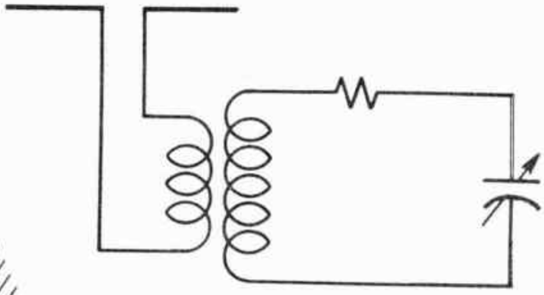

Lesson 18

The "A-C Circuit Principles" lesson considered the action of resistors, inductors, and capacitors in a-c circuits. During the discussion of inductive and capacitive reactance, it was found that inductive reactance increases and capacitive reactance decreases with an increase in frequency. If a coil and a capacitor are connected in series, the increasing inductive reactance must at some frequency meet the decreasing capacitive reactance; that is, at some one frequency the *total* reactance must be zero. This condition is called *resonance*. It is one of the most important principles in radio and television, since it makes possible the design of *frequency-selective circuits*, which will pass signals of a certain predetermined frequency or frequencies but reject signals of other frequencies. The tuning circuits of television receivers, for instance, make use of resonant circuits to accept picture and sound signals from one channel but reject those from other channels.

18-1. SERIES RESONANCE

Figure 18-1 shows a series-resonant circuit: a coil and a capacitor in series with a source of alternating voltage. The resistor, shown in dashed lines in the figure, represents the resistance of the coil, capacitor, and wiring. Often, in schematic diagrams of practical circuits, this built-in or *distributed* resistance is not shown. However, in analyzing such circuits it is necessary to remember that some resistance is present. We learned in the "A-C Circuit Principles" lesson that the total or net reactance of such a circuit equals the difference between the inductive and capacitive reactances, because the voltage drops across them are 180° out of phase. If the reactances are equal and opposite, they cancel each other and *the flow of current is limited only by the resistance of the circuit.* So far as the generator is concerned, at one frequency there is no reactance. This frequency is called the *resonant frequency*, and is abbreviated f_r.

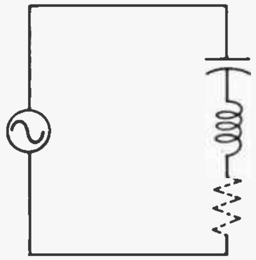

Fig. 18-1

Figure 18-2 illustrates what happens to the reactances in the series circuit if the generator supplying a-c voltage is started at some low frequency and gradually increased to some very high frequency. Frequency is shown increasing from left to right, and reactance is plotted from the baseline upward. Voltage values are unimportant, since we are interested only in frequency.

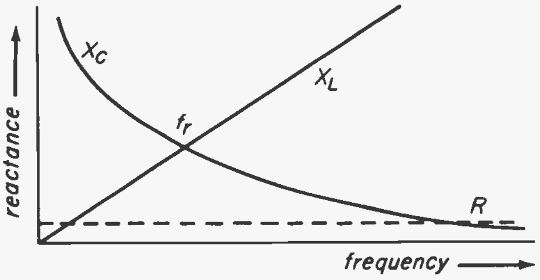

Fig. 18-2

At the lowest frequency shown, the capacitive reactance, X_C, is very high, overshadowing the small inductive reactance, X_L, and the circuit behaves as if it contained only a capacitor and a resistor. The resistance in the circuit, indicated by the dashed line, is assumed to be the same at all frequencies. As the frequency of the applied voltage is increased, the capacitive reactance decreases and the inductive reactance increases. At some very high frequency, the situation is reversed, the inductive reactance predominates, and the circuit behaves as if only a coil and a resistor were present.

At *some* frequency, the decreasing capacitive reactance and the increasing inductive reactance must meet; that is, become equal. On the graph, this occurs where the reactance lines cross, at the frequency f_r. The frequency at which resonance occurs depends upon the values of inductance and capacitance. It may be near power-line frequencies or far above the range of the highest TV channels.

At resonance, the reactances cancel out completely, and the amount of current that flows depends entirely upon the value of resistance. If the applied voltage remains constant in amplitude at all frequencies, a higher current will flow in the circuit at resonance than at any other frequency, because at that frequency the net reactance is zero, leaving only the resistance to limit the current flow.

Reactive Voltage Drops – Even though at resonance the generator does not see any reactance in the circuit, both the coil and the capacitor have definite values of reactance. There will therefore be voltage drops across both the capacitor and the coil. Furthermore, since the current is greater at resonance than at any other frequency, these voltage drops may be very large at the resonant frequency.

As an example of how large the reactive voltage drops at resonance may be, assume that 20 volts at the resonant frequency is applied to the circuit of Fig. 18-1, and that $X_L = 400$ ohms, $X_C = 400$ ohms, and $R = 5$ ohms. The reactances cancel and the current is $E/R = 20/5 = 4$ amperes. This current is the same in all parts of the circuit, and flows through both the coil and the capacitor. The voltage drop across the coil is $IX_L = 4 \times 400 = 1{,}600$ volts. The voltage drop across the capacitor is $IX_C = 4 \times 400 = 1{,}600$ volts. This is one of the characteristics that make resonant circuits so important. Even though these voltage drops cancel in the circuit itself, the difference of potential across either one can be used in another circuit. Thus a voltage can be amplified by a resonant circuit.

Resonant Frequency – The resonant frequency of a particular coil and capacitor combination is that frequency at which the inductive and capacitive reactances are equal; that is, when:

$$X_L = X_C$$

or

$$2\pi f_r L = \frac{1}{2\pi f_r C}$$

Multiplying both sides of this equation by f_r and dividing both sides by $2\pi L$ gives:

$$f_r^2 = \frac{1}{4\pi^2 LC}$$

Taking the square root of both sides of this equation gives:

$$f_r = \frac{1}{2\pi\sqrt{LC}}$$

where f_r = resonant frequency in cycles per second

π = 3.14

L = inductance in henrys

C = capacitance in farads

For circuits operating at radio frequencies, these units are very large, so we can modify the formula to use more practical values:

$$f_r = \frac{10^6}{2\pi\sqrt{LC}}$$

where f_r = frequency in kilocycles

10^6 = 1,000,000

π = 3.14

L = inductance in microhenrys

C = capacitance in micromicrofarads

If, for instance, we have a 2-microhenry coil and an 18-mmf capacitor in a series circuit, the resonant frequency of the combination will be:

$$f_r = \frac{10^6}{2\pi\sqrt{LC}} = \frac{10^6}{3.14 \times 2 \times \sqrt{2 \times 18}} =$$

$$\frac{10^6}{6.28 \times 6} = \frac{10^6}{37.7} = \frac{1{,}000{,}000}{37.7} = 26{,}530 \text{ kc}$$

or 26.53 mc.

LC Product – Notice that the resonant frequency depends entirely on the inductance and capacitance in the circuit. The use of a variable coil or capacitor makes it possible to vary the resonant frequency of the circuit. Varying the resonant frequency is called *tuning* the circuit. The formula shows that the product of *L* and *C* – the quantity obtained when *L* and *C* are multiplied – is always the same for a particular frequency. Using the example above, the product of *L* and *C* is 2 x 18 = 36, which gives a resonant frequency of 26.53 mc. The value 36 is called the *LC product* for this particular frequency. Any coil and capacitor the LC product of which is 36 will have a resonant frequency of 26.53 mc. For example, the list below shows a few of the possible combinations.

µh/mmf	*µh/mmf*
1	36
2	18
3	12
4	9
6	6

Any of these combinations will resonate at 26.53 mc. Thus we may use a large *C* and a small *L*, or a large *L* and a small *C* to obtain resonance at a particular frequency. The relationship between the values of the two is called the *LC ratio*. This term is usually used in referring to a particular circuit or type of circuit for which a certain *LC* ratio is considered "normal". The r-f tuning capacitors in broadcast radios, for instance, usually have a capacitance of about 365 mmf. A coil for the broadcast band is about 250 µh, resulting in an *LC* ratio for this type of circuit of about 1/1.4. If we designed such a circuit using a larger capacitance and a smaller inductance, it would be called a *high-C circuit*. If we used a smaller capacitance and a larger inductance, it would be a *low-C circuit*. However, these terms would only apply for this particular application. There is no ideal *LC* ratio for all purposes; the best ratio for any circuit depends upon the requirements of the circuit.

Resonance Curve – We have already examined the basic operation of the series-resonant circuit in Fig. 18-1. Since the reactances cancel each other at the resonant frequency, the impedance of a series-resonant circuit becomes: $Z_r = R$. At this frequency, the current is in phase with the applied voltage. For frequencies above the resonant frequency, the inductive reactance exceeds the capacitive reactance, and the net reactance is inductive. The current thus lags the applied voltage for frequencies higher than the resonant frequency. For frequencies below the resonant frequency, the capacitive reactance exceeds the inductive reactance, and the current leads the applied voltage. The variation of impedance, which is the a-c sum of net reactance and resistance, is shown in Fig. 18-3*a*.

The plot of current is shown in Fig. 18-3*b*. The greatest value of current flows at the resonant frequency, since it is limited only by the resistance of the circuit. Due to the increasing impedance away from the resonant frequency, the current correspondingly decreases. The curves of Fig. 18-3 are known as resonance curves.

Bandwidth and Selectivity – The shape of the resonance curves indicate that a series-resonant circuit may be quite *selective* or *sharp*, because relatively large currents can flow only when

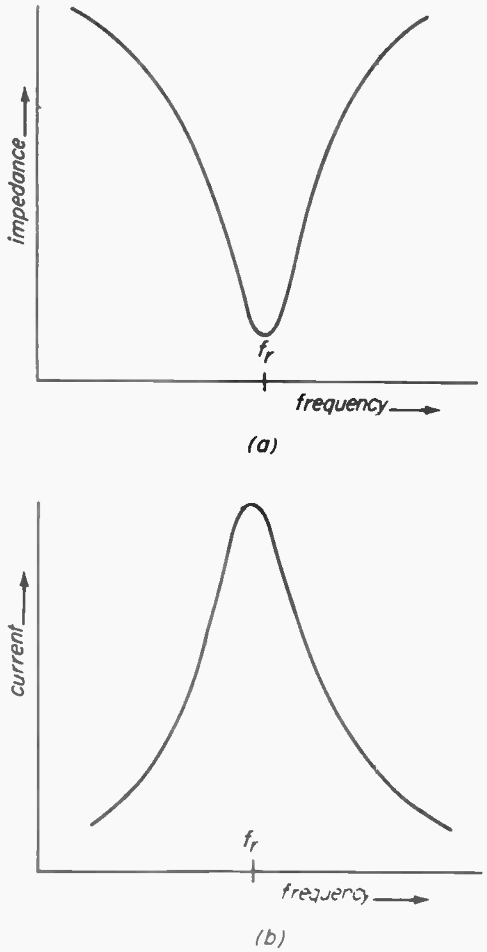

Fig. 18-3

the applied voltage is within a narrow band of frequencies extending on either side of the resonant frequency. The largest current flows at the resonant frequency, of course, but there is also a relatively large current flow on each side of resonance. Thus sizeable currents result from alternating voltages in a *band* of frequencies near the resonant frequency. We say that these frequencies are *passed* or *accepted* by the circuit, and that those at which little or no current flows are *rejected*. The band of frequencies accepted by the circuit may include only a few hundred or a few thousand cycles, or, as in television tuners, it may include eight or ten megacycles. It is called the *bandwidth* of the resonant circuit.

In order to compare different circuits in terms of bandwidth, we must know which frequencies are considered to be passed and which rejected. For this reason, we say that the bandwidth of a circuit is the difference between the *half-power frequencies* or *half-power points* of the circuit. We learned in the "A-C Circuit Principles" lesson that the power in a pure inductance or a pure capacitance is not dissipated, but returned to the source. When an inductor and a capacitor are connected in a series circuit, then all the *reactive* power is returned to the source. The power dissipated in the circuit is therefore I^2R. Since maximum current flows at resonance, maximum power dissipation must also occur at resonance. At some frequency *above* resonance, exactly one-half the maximum power will be dissipated. This is called the upper *half-power point.* At some frequency *below* resonance, one-half the maximum power will also be dissipated. This is called the lower *half-power point.* The frequencies between these half-power points are considered to be passed by the circuit. Since resonance curves plot current rather than power against frequency, it is convenient to be able to locate the half-power points on the current curve without calculating the power. This can be done by multiplying the current at resonance times .707. The resultant points on the curve are the half-power points. This is shown in Fig. 18-4.

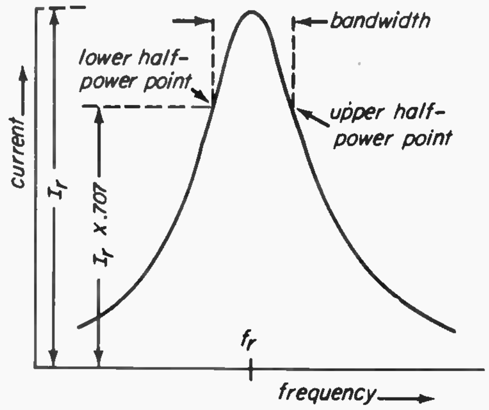

Fig. 18-4

This definition of bandwidth makes it possible to classify resonant circuits as *narrow-band* or *broad-band*. If only a small range of frequencies is accepted by a circuit, the bandwidth is narrow. If a large range of frequencies is accepted, the bandwidth is broad. Both broad-and narrow-band circuits are used in radio and television receivers.

Circuit Q and Bandwidth – The shape of the response curve for any series-resonant circuit depends primarily upon two factors: the reactance in the circuit and the resistance in the circuit. At resonance, the inductive reactance equals the capacitive reactance. Both the inductive branch and the capacitive branch contain resistance, as we have seen. However, the distributed resistance of a coil is so much greater than that of a capacitor that we can assume, for practical purposes, that all the resistance is in series with the coil. This being so, the ratio of the inductance of the coil to the resistance of the coil is essentially the same as the ratio of either reactance of the circuit to the resistance of the circuit. The ratio of reactance to resistance of a coil, as we learned in the "A-C Circuit Principles" lesson, is known as the Q of the coil. The same term applies in the case of resonant circuits. In a series-resonant circuit, therefore, where all the resistance of the circuit is assumed to be in series with the coil, the Q of the circuit is the same as the Q of the coil: X_L/R.

The selectivity of a series-resonant circuit – the sharpness of its response curve – varies directly with the Q of the circuit. High-Q circuits are narrow-band, passing only those frequencies near the resonant frequency. Low-Q circuits, on the other hand, are broad-band, and pass a much greater range of frequencies. Thus series-resonant circuits may be compared in terms of their Q's; a high-Q circuit being more sharply selective than a low-Q circuit.

Examining the formula, $Q = X_L/R$, it can be seen that an increase in R must decrease the Q of the coil, and thus of the circuit. Since selectivity varies directly with Q, this means that an increase in R results in less selectivity, or broader bandwidth. This is illustrated in Fig. 18-5. Note that the effect of adding resistance is twofold. First, the portion of the resonance curve near resonance becomes broader and flatter. As the peak flattens, the circuit begins to permit almost equal currents to flow for a wide band of frequencies on either side of resonance. This means that the bandwidth of the circuit is increased. At the same time, the peak of the curve is pulled down. Since the curve plots frequency against current, this means that at the resonant frequency, *less* current flows as the resistance in the circuit is increased. In the design of practical circuits, this frequently necessitates a compromise. When high output at the resonant frequency and the narrowest possible bandwidth is desired, a very high-Q circuit is used. In many cases, however, a circuit must pass a wide range of frequencies. Greater bandwidth may be obtained by adding series resistance to the circuit. However, the maximum output at the resonant frequency is decreased, as noted above.

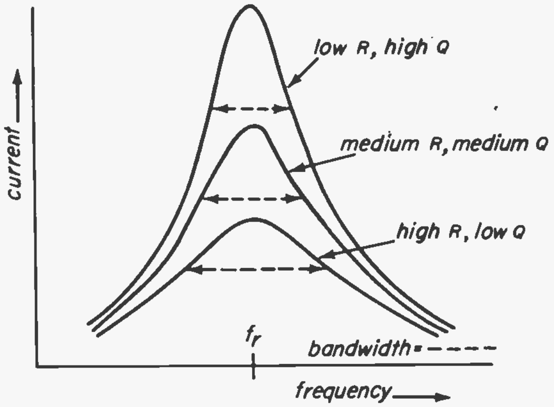

Fig. 18-5

Returning to our example of Fig. 18-1, where the reactances at resonance were X_L = 400 ohms, X_C = 400 ohms, and R = 5 ohms, the Q of the circuit is:

$$Q = \frac{X_L}{R} = \frac{400}{5} = 80$$

If the Q of a circuit is known, it is possible to calculate the reactive voltage drops across the coil and capacitor at resonance without having to determine the current. The reactive voltage drop across either reactance equals Q times the applied voltage, which was 20 volts in the example. The voltage drop across either the coil or the capacitor at resonance, therefore, is: $QE = 80 \times 20 = 1{,}600$ volts. This is the same result we obtained by calculating the current and multiplying it times the reactance. Note that the higher the Q, the greater is the voltage drop across either the coil or the capacitor.

18-2. PARALLEL RESONANCE

Figure 18-6*a* shows a circuit made up of a coil, a capacitor, and a voltage source. The circuit is a parallel one, because the same generator voltage is applied to both branches. We will assume that there is no resistance or resistive losses in the circuit. At resonance, the capacitive and inductive reactances are equal. Since the same generator voltage appears across each branch, the currents through the two reactances are equal and opposite (180° out of phase with each other). Therefore, the *main-line* or *line current* is zero. This is shown in the graph of Fig. 18-6*b*. The frequency at which this condition occurs – that is, the resonant frequency – can be found by the same formula used to calculate series resonance:

$$f_r = \frac{1}{2\pi\sqrt{LC}}$$

If the frequency of the applied voltage is increased from resonance, the capacitive current becomes greater and the inductive current smaller, leaving a net capacitive current which is the line current. This current increases as the frequency increases. If the frequency of the applied voltage is decreased from resonance the inductive current increases, the capacitive current decreases, and a net inductive line current flows. Figure 18-6*b* shows the variation of line current with frequency. Note that line current is zero at the resonant frequency, and increases on either side of resonance.

From the formula, $Z = E/I$, I representing line current, we can plot impedance versus frequency. This is done in Fig. 18-6*c*. Note that the curve is the reverse of the current curve. Since at resonance the current is zero, the impedance at resonance is infinite (larger than can be measured). This is indicated in the figure by a break in the impedance curve. At frequencies away from resonance, the impedance decreases, because the line current increases.

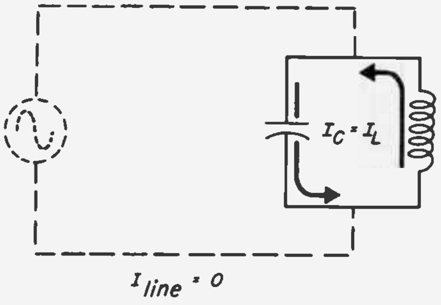

Fig. 18-7

Figure 18-7 illustrates another characteristic of parallel-resonant circuits. We know that the two branch currents are equal, but opposite in phase. This accounts for the line current being zero.

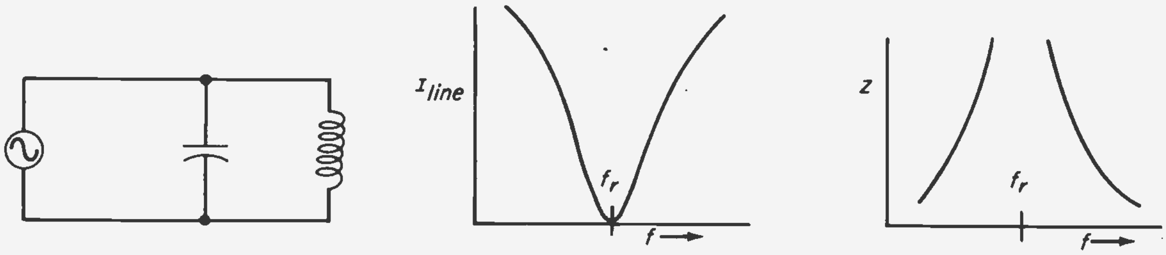

(a) *(b)* *(c)*

Fig. 18-6

However, current does flow in the circuit made up of the coil and capacitor, but simply circulates between the coil and the capacitor. This current is called the *circulating* or *tank current,* and the coil and capacitor combination is called the *tank circuit.* The tank circuit and currents are represented in the figure by solid lines, and the line circuit by dashed lines.

Parallel-Resonant Circuits With Series Resistance – In the preceding section, a theoretical circuit containing no resistance or resistive losses was assumed. In practical circuits, however, some resistance is always present, most of it in the coil. The presence of such resistance causes parallel-resonant circuits to behave somewhat differently.

Figure 18-8*a* shows the parallel circuit now to be considered. Notice that the resistance appears in series with the coil. Actually, the resistance is distributed throughout the coil, but can be considered as a single resistor for all practical purposes. The capacitor appears across the coil and resistor. Resistive losses of the capacitor are usually negligible and therefore can be disregarded. Resonance can again be defined as the frequency at which the inductive and capacitive reactances are equal. Hence, the same formula still applies:

$$f_r = \frac{1}{2\pi\sqrt{LC}}$$

Since there is some resistance in the inductive branch, that branch current does not lag the voltage by 90°, as in the circuit without resistance, but by slightly less than 90°. The capacitive branch current leads the voltage by exactly 90°, since we consider the capacitor to have no resistance. The two branch currents are not 180° out of phase with each other, and do not completely cancel. Thus there will be a small net or line current. Another way of looking at this action is to consider that only as much line current flows as is necessary to make up the losses in the circuit. These losses are usually small at resonance, since the resistance of the coil and circuit wiring is small. Therefore, only a small current is taken from the line. Because the line current at resonance is minimum, the impedance is maximum. Away from the resonant frequency, the line current increases, just as in the theoretical circuit without resistance, and the impedance of the circuit decreases. Current and impedance are plotted against frequency in Fig. 18-8*b*. Note that the impedance curve reaches a finite, maximum value at resonance.

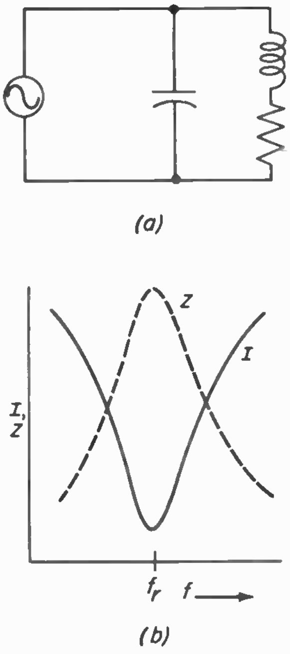

Fig. 18-8

The impedance of a parallel *LC* circuit at resonance is dependent upon the *Q* of the coil and the reactance of either *L* or *C*. The formula for impedance at resonance is: $Z = QX$.

Problem: What is the resonant frequency of a parallel-resonant circuit if $L = 5\ \mu h$, $C = 45$ mmf, and $R = 6$ ohms. What is the impedance of the circuit at resonance?

$$f_r = \frac{1}{2\pi\sqrt{LC}}$$

$$f_r = 10{,}620 \text{ kc or } 10.62 \text{ mc}$$

$$Q = \frac{X_L}{R} = \frac{2\pi f L}{R} = \frac{333}{6} = 56$$

$$Z_r = QX = 56 \times 333 = 18{,}648 \text{ ohms}$$

Bandwidth or Selectivity – The bandwidth or selectivity of a parallel-resonant circuit containing series resistance, as in series circuits, is dependent upon the Q of the coil. Figure 18-9 shows the bandwidth of parallel LC circuits with coils of three different Q's. The impedance curves are also shown. Note that with the coil of the highest Q, the line current at resonance is minimum and the impedance maximum. With coils of lower Q, the line current at resonance is still minimum for the circuit, but is higher than that of a high-Q coil. Similarly, the impedance is still maximum for the circuit, but less than that of circuits with higher-Q coils. Since Q is inversely proportional to R, to obtain high selectivity, resistance must be kept at a minimum.

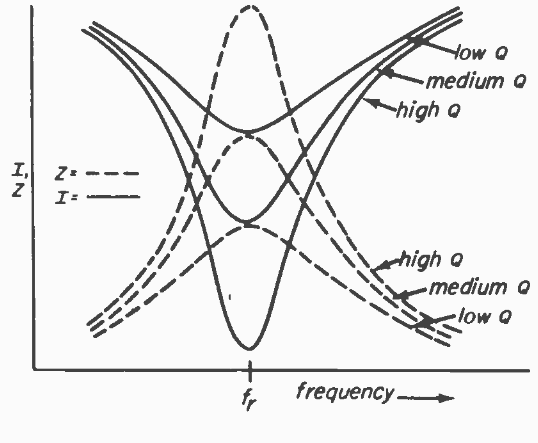

Fig. 18-9

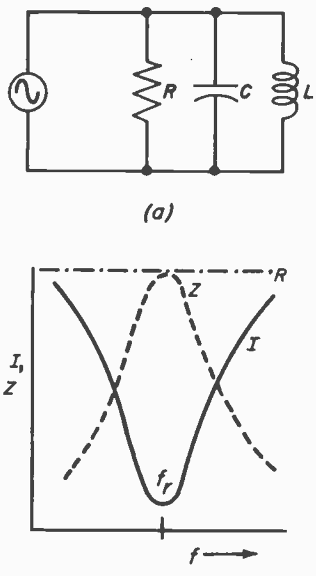

(a)

(b)

Fig. 18-10

Parallel Circuits with Shunt Resistance – In practice, a resistor is often placed *across* a parallel-resonant circuit to increase the bandwidth of the circuit. The effect of this *resistance-loading* is shown in Fig. 18-10, in which a resistor appears across the parallel-resonant circuit and is thus one leg of a three-branch parallel circuit. At the resonant frequency, the inductive and capacitive reactances are equal; hence the two reactive branch currents are equal and opposite. If there were no resistance in the circuit, the line current would be zero. However, the parallel resistance allows a current to flow. The value of this line current at resonance depends almost entirely upon the value of the parallel resistance. At frequencies away from resonance, one branch current becomes greater, and is only partially cancelled by the smaller. The line current is then made up of the current through the resistor plus the excess reactive current. This line current increases farther from resonance, because the difference between the two reactive currents becomes greater. The plot of line current and impedance against frequency is shown in Fig. 18-10*b*. At resonance the impedance decreases as the frequency either increases or decreases away from the resonant frequency. The impedance at resonance is sometimes referred to as *resistive impedance*, because the reactive currents cancel and the impedance is that of the parallel resistance.

The determination of the Q of such a circuit is not the same as for the circuits encountered. When the resistor is in parallel with the coil and capacitor:

$$Q = \frac{R}{X}$$

Thus, the effect of *decreasing the resistance is to decrease* the Q and increase the bandwidth. In practice, a small resistor is often placed across a parallel-resonant circuit to obtain wide bandwidth.

Summary of Series– and Parallel-Resonant Circuits – The more important characteristics of series– and parallel-resonant circuits are summarized below.

SERIES-RESONANT CIRCUITS

1. The resonant frequency may be found by the formula: $f_r = 1/(2\pi\sqrt{LC})$
2. At resonance, $X_L = X_C$, impedance is minimum, and maximum line current flows, being limited only by the resistance.
3. The phase angle is zero, and the line current is in phase with the applied voltage.
4. At frequencies below resonance, the circuit appears capacitive, and the line current leads the applied voltage. At frequencies above resonance, it appears inductive, and the line current lags the applied voltage.
5. Bandwidth and selectivity are dependent upon the Q of the coil. High Q results in high selectivity and high output at resonance; low Q broadens the bandwidth and decreases the output at resonance.
6. The voltage drops across the coil and capacitor may be greater than the applied voltage. The drop across either reactance at resonance may be calculated by the formula: QE.

PARALLEL-RESONANT CIRCUITS

1. The resonant frequency may be found by the same formula used for series-resonant circuits: $f_r = 1/(2\pi\sqrt{LC})$
2. At resonance, $X_L = X_C$, and the branch currents are equal and 180° out of phase.
3. At resonance, impedance is maximum and the line current is minimum.
4. Above resonance, the circuit appears capacitive, and the line current leads the applied voltage. At frequencies below resonance, the circuit appears inductive, and the line current lags the applied voltage.
5. The phase angle is zero at resonance, and the line current is in phase with the applied voltage.
6. Bandwidth is determined by the amount of resistance that is in series with the coil or in parallel with the coil and capacitor.

18-3. RESONANT-CIRCUIT APPLICATIONS

Tuned Circuits – Probably the most important use made of the resonance principle is in tuned circuits. Television sets employ a dozen or more tuned circuits in the r-f and i-f sections. Tuned circuits make use of the frequency-selective characteristics of resonant circuits. That is, even though signals of many frequencies are applied to a tuned circuit, the circuit provides an output at only a limited, predetermined band of frequencies. Before considering actual circuits, therefore, let us see how a selective output, either voltage or current, can be obtained from a parallel-resonant circuit.

First, suppose that a selective *voltage* output is desired. Figure 18-11*a* shows a parallel-resonant circuit connected to an a-c generator which is assumed to have no internal resistance. As in all parallel circuits, impedance must be maximum and line current minimum when the applied voltage is of the frequency at which the parallel circuit is resonant. At frequencies off resonance, line current and impedance go through resonance curves, as we have seen. Since impedance varies with frequency, we can, for our purposes, represent the circuit as in *(b)* of the figure, with the parallel circuit shown as a variable resistor.

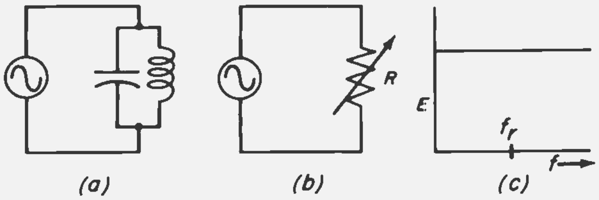

Fig. 18-11

If the applied voltage is constant in amplitude, all the output voltage must appear across the variable resistor, regardless of the *frequency* of the applied voltage. Varying the value of the resistor, therefore, does not affect the voltage drop across it. Substituting the impedance of the parallel circuit for the variable resistor, a graph of voltage versus frequency would simply be a straight line, as shown in Fig. 18-11*c*. Under these conditions, a selective voltage output cannot be obtained.

Now suppose we add another resistance, R_g, in series with the generator and the resistor representing the parallel-resonant circuit, as shown in Fig. 18-12*a*. This arrangement acts like a voltage divider, and the applied voltage divides between R and R_g. The sum of these two voltage drops must equal the applied voltage, and the drop across R is proportional to the ratio of its resistance to the total resistance of the circuit. Decreasing the value of R results in less voltage drop across it; increasing R causes more voltage to be developed across it. And since R in our example represents the impedance of the parallel circuit – which varies with the frequency of the applied voltage – the voltage output of the circuit must also vary with the frequency. Figure 18-12*b* shows the output voltage plotted against frequency. Note that maximum output voltage coincides with the resonant frequency. This is always true, since at resonance the impedance of the tank circuit is at its maximum and the highest possible voltage is developed across it. At frequencies away from resonance, the impedance of the tank circuit decreases, and the voltage across the tank circuit decreases. In practical circuits, R_g may be the internal resistance of the generator or source.

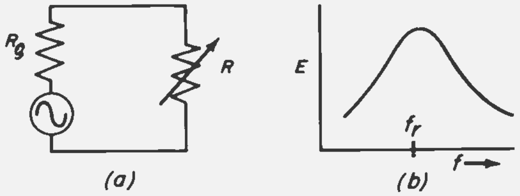

Fig. 18-12

Figure 18-13 shows the selectivity curves for three values of R_g. As we have seen, when R_g is zero, the output voltage does not vary with frequency. As R_g is increased, better selectivity (a sharper curve) is obtained but the maximum voltage at the resonant frequency decreases. This principle appears in practical amplifier circuits using pentode tubes. A typical circuit is shown in Fig. 18-14. The plate impedance of the tube is R_g, and is much larger than the impedance of the tank circuit. The output of the tank circuit, therefore, is selective.

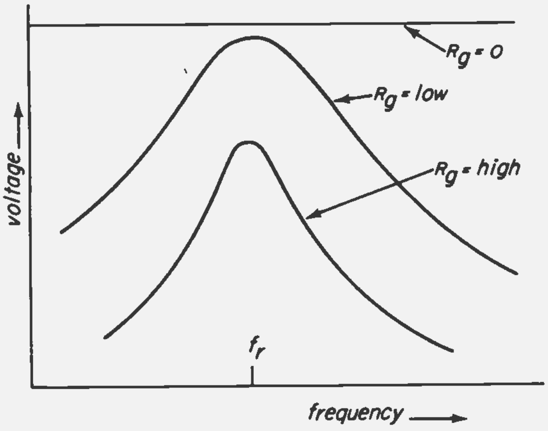

Fig. 18-13

This voltage output may be taken off through a coupling capacitor and applied to the following circuit. However, in many cases it is desirable to couple inductively the output of the tuned tank circuit to another tuned circuit. This can be done by making use of the inductive branch currents in the parallel-resonant circuit. Let us first study the behavior of the branch currents.

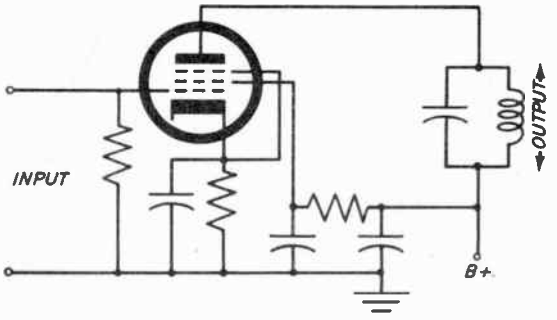

Fig. 18-14

The branch currents, under certain conditions, go through a resonance curve with variations in input frequency. At resonance, the voltage across the tank circuit is maximum, and the branch currents are also maximum. At frequencies above and below resonance, the branch currents vary directly with the voltage across the tank circuit. The voltage decreases off resonance, and the branch currents also decrease. The currents go through resonance curves of approximately the same shape as that of the voltage. Figure 18-15*a*, which plots variations of voltage and branch currents against frequency, shows this. Note that these curves hold true *only* if the generator, tube, or other source of voltage has internal resistance. If there is no internal resistance, neither the voltage nor the branch currents go through resonance curves. However, in all practical circuits the generator or tube contains internal resistance, and the branch currents *do* go through resonance curves. Hence they can be used to furnish a selective current output.

In Fig. 18-15*b*, the current through the coil is taken off by inductive coupling to another coil. Since the voltage in the secondary is induced by the current flowing in the primary, the voltage in the secondary must follow a resonance curve almost like that of the primary.

The output of a tank circuit can be made even more selective by using a double-tuned transformer, as shown in Fig. 18-15*c*. How selectivity is improved by the addition of another tuned circuit can be seen with the aid of Fig. 18-16.

Suppose that the two tuned circuits of Fig. 18-16 have identical selectivity characteristics, so that, taken separately, the response curve of either would be that shown by the solid line in *(b)* of the figure. Note that the graph plots frequency on either side of resonance against the ratio of output signal to input signal. This means that the degree to which the input signal is attenuated for a signal any number of kilocycles off resonance may be found by noting the height of the curve at that point. For example, at 5 kc below resonance, the output signal is only 90 percent of the input signal. This holds true for any value of applied voltage.

If these two circuits are connected as a double-tuned circuit, as shown in

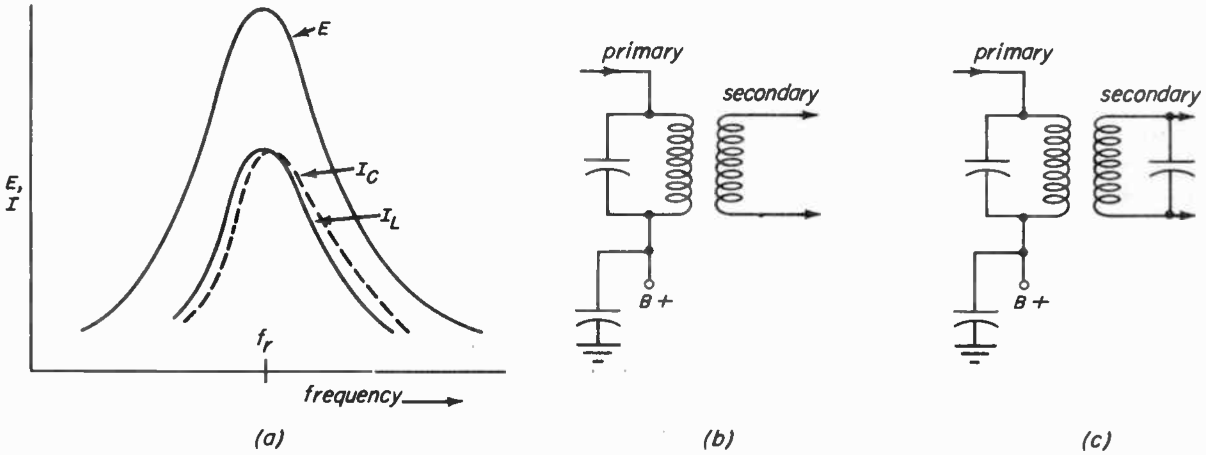

Fig. 18-15

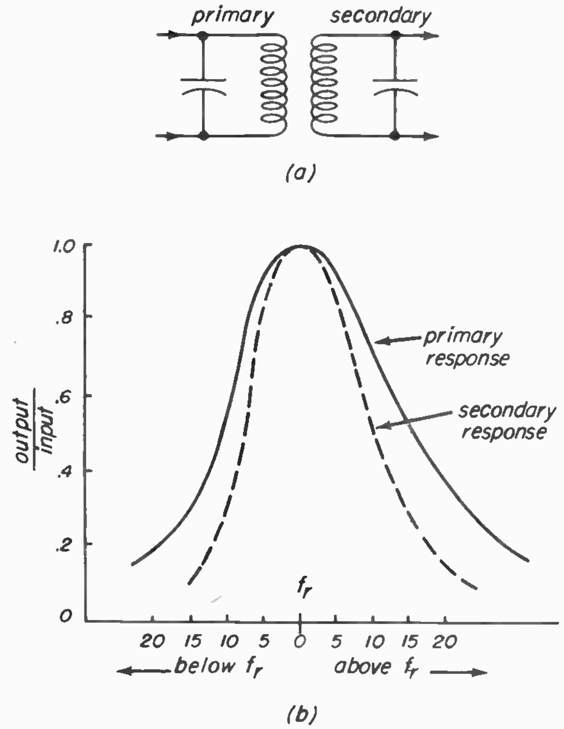

Fig. 18-16

(a) of the figure (ignoring for the moment the degree of coupling), the output of the primary circuit becomes the input for the secondary circuit. If a signal 5 kc below resonance is applied to the primary, the graph shows that only 90 percent of the signal will appear in the output. This signal now acts as the input for the secondary. However, the secondary attenuates the off-resonance signal, by the same percentage, so that only 90 percent of the already-reduced input appears in the secondary output. This holds true for all other frequencies as well, the signal being first attenuated by the tuned primary, then again by the tuned secondary. This results in a secondary response like that shown by the dashed line *(b)* of the figure. Note that it is appreciably sharper than the primary response curve.

An additional advantage of using a double-tuned transformer is that the output may be made considerably larger than the input. The secondary may be considered to be a series-resonant circuit, since the voltage induced in the coil is applied in series with the coil and capacitor. At frequencies near resonance, therefore, the voltage across the reactances may be many times higher than the applied voltage, the exact amount depending upon the Q of the circuit.

In many tuned-circuit applications, the exact ***shape*** of the response curve is very important. The shape of the response curve of a double tuned circuit may be changed by varying the ***coefficient of coupling.*** This term is used to describe the percentage of magnetic coupling between the two circuits. It can be varied by changing the relative position of the two coils. Coupling may be critical, tight, or loose. The effect of different degrees of coupling on the response curve is shown in Fig. 18-17. With critical coupling, the response curve of the secondary is a single-peaked curve of maximum height. If the circuits are loosely coupled, the curve appears as a single peak but with reduced height. If the circuits are overcoupled – that is, coupled to a greater degree than that required for critical coupling – *two* peaks occur. By selecting the proper degree of coupling for a series of tuned circuits, almost any desired response curve can be obtained.

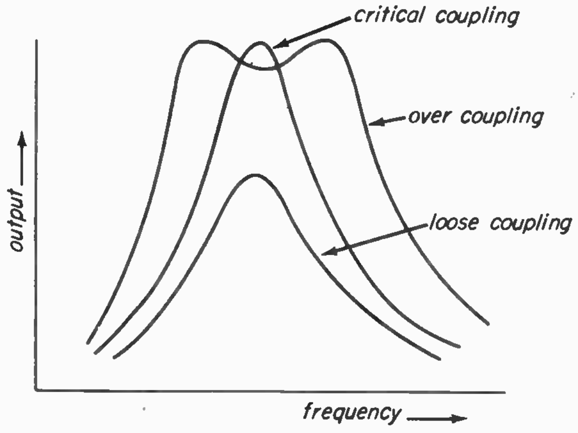

Fig. 18-17

Wavetraps – Just as resonant circuits can be used to pass a single band of frequencies, they can also be used to reject one band and pass all others. When used for this purpose, the circuits are called *wavetraps* or simply *traps.* Traps are especially useful at the input of the r-f section of a television receiver, where many signals of different frequencies are fed into the receiver from the antenna. Most of the undesired frequencies are rejected by the tuned bandpass circuits of the r-f amplifier and converter, but occasionally a strong signal, such as that from a nearby FM station, might be able to force its way through and cause interference in the picture or sound. Traps are built into many television front ends for the purpose of eliminating interference from a single FM station.

A parallel-resonant trap may be connected in series with each side of a balanced transmission line, where it offers very high impedance to signals at or near its resonant frequency. The method of connection is shown in Fig. 18-18*a*. Signals at other frequencies encounter negligible impedance and pass along to the r-f amplifier. The interfering signal, however, is either eliminated or greatly attenuated (reduced in amplitude) by the high impedance. The traps are usually tuned to the interfering frequency by variable coils.

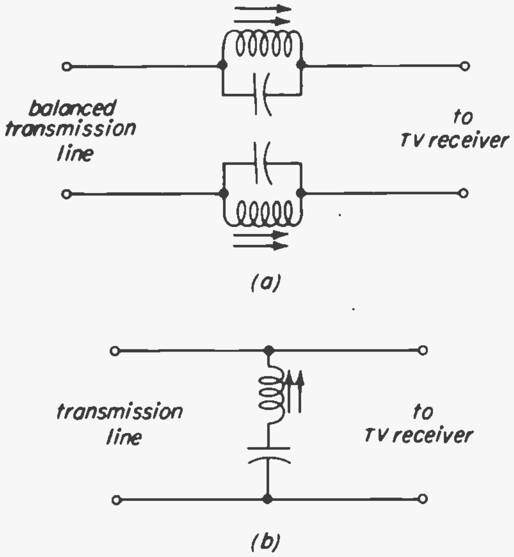

Fig. 18-18

A series-resonant trap may also be used as a wavetrap, in which case it is connected *across* the line, as shown in Fig. 18-18*b*. The series circuit offers an extremely low impedance at the resonant frequency, and looks almost like a short circuit to the interfering signal. The signal therefore does not go on to the r-f amplifier. Signals at other frequencies see a very high impedance across the line and pass normally to the r-f section.

18-4. FILTERS

LC combinations are used in series and parallel arrangements as filters, to attenuate or pass all frequencies above or below a desired critical frequency called the *cut-off frequency* (f_c). Other filters are used to attenuate or pass whole bands of frequencies. These are unlike the wavetraps, which suppress a a narrow range of frequencies. Filters may be classified according to four basic types:

1. *Low-pass:* passes all frequencies below the cut-off frequency; attenuates those above cutoff.
2. *High-pass:* passes all frequencies above cutoff; attenuates those below.
3. *Band-pass:* passes the band of frequencies between two cut-off frequencies; attenuates those above *and* below.
4. *Band-elimination:* attenuates the band of frequencies between two cut-off frequencies; passes those above and below.

Filter designs vary considerably, depending upon the characteristics desired. One important characteristic is *sharpness of cutoff,* a term that indicates how rapidly signals beyond the cut-off frequency are attenuated. Figure 18-19*a* represents the response curve of a simple low-pass filter. The cut-off frequency is that frequency at which attenuation begins; in this case, all higher frequencies are attenuated. Ideally, all frequencies above cutoff would be completely eliminated, or attenuated to such a degree that they would not appear in the output of the filter. Such sharp distinction cannot be made with simple filters, however. The response curve shows that frequencies just above cutoff appear in the output only slightly reduced in amplitude. The attenuation gradually increases until maximum attenuation is reached: that point in the figure at which the output of the filter is zero. Figure 18-19*b* shows a simple low-pass filter with much sharper cutoff. In this case, the slope of the curve from maximum to zero output is much steeper, and a much narrower band of frequencies is partially attenuated.

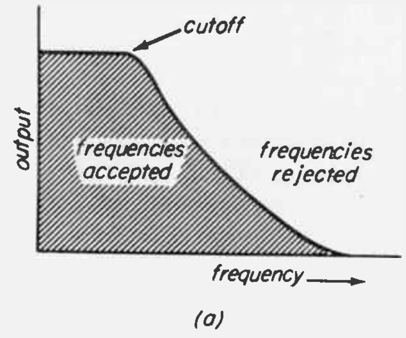

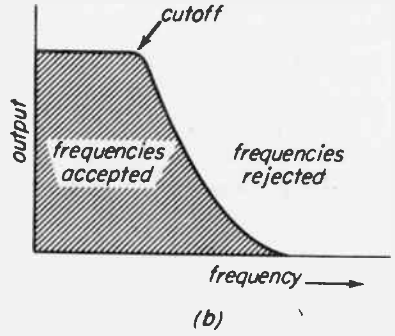

Fig. 18-19

Basic Filter Theory – How a simple series circuit can be used as either a high-pass or a low-pass filter is shown in Fig. 18-20. The coil and capacitor in series with the source of a-c voltage from a voltage divider, and by using terminals 1 and 2 or terminals 2 and 3 we can take the output of the circuit across either the coil or the capacitor. Suppose we first select terminals 1 and 2, taking the output across the coil. If the generator supplies a voltage of low frequency, the reactance of the capacitor will be high, and a much greater voltage drop will appear across the capacitor than across the coil. Thus the output, which we take across the coil, will be low. If the applied voltage is of a relatively high frequency, the reverse is true: the reactance of the coil is high and that of the capacitor is low. Most of the voltage drop appears across the coil, and can be passed to other circuits. Thus if we take the output across the coil, we have a high-pass filter. A typical response curve is shown in Fig. 18-20*b*.

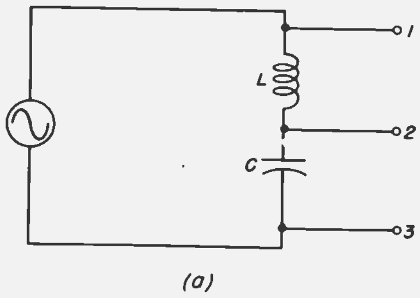

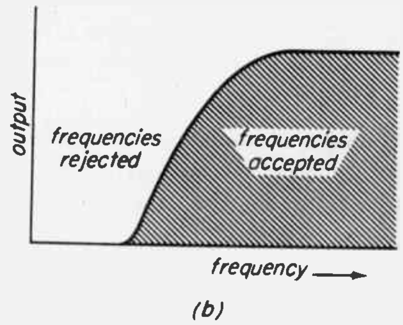

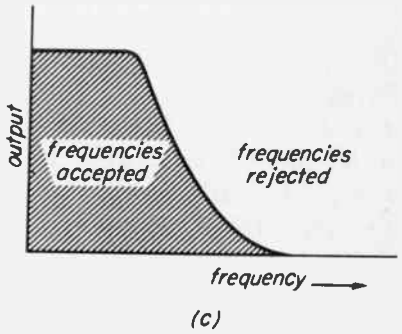

Fig. 18-20

Now suppose we use terminals 2 and 3, the capacitor, to take off an output voltage. For voltages of low frequencies, the reactance of the capacitor is high, and considerable voltage is developed across it. Since this voltage is the output, low-frequency signals can be transferred to other circuits. At high frequencies, the capacitive reactance is low, the inductive reactance is high, and most of the voltage appears across the coil, resulting in little or no output across the capacitor. Used in this way, the circuit acts as a low-pass filter, the response curve of which is shown in *(c)* of the figure.

The cut-off frequency of either the low-pass or high-pass filter is determined chiefly by the values of *L* and *C*.

Low-Pass Filters – Figure 18-21 shows a simple low-pass *LC* filter: an inductor in series with the line, a capacitor across it. At low frequencies the coil has little reactance and offers practically no opposition to low-frequency signals passing through the line. The reactance of the capacitor at these low frequencies is high, and low-frequency signals will develop a voltage across the capacitor, which is the output. At high frequencies, however, the reverse is true. The inductive reactance is high, and the capacitive reactance is low, so that high-frequency signals are attenuated by the coil and very little voltage drop appears across the capacitor.

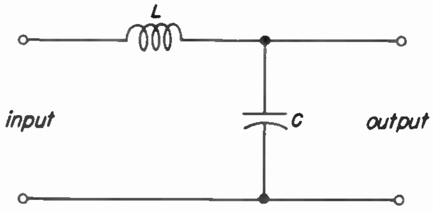

Fig. 18-21

High-Pass Filters – A simple high-pass filter is shown in Fig. 18-22. This is essentially the reverse of the low-pass filter; the capacitor is in series with the line and the coil across it. For high-frequency signals, the capacitor has little or no reactance, and the coil an appreciable reactance. Therefore, high-frequency signals will appear across the coil, as the output. For low-frequency signals, the capacitor has very high reactance and the coil very little reactance, so that there will be considerable attenuation of the low-frequency signals.

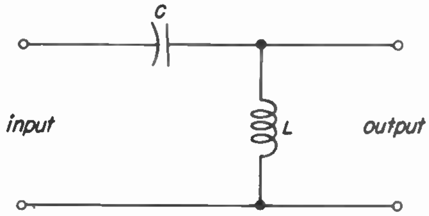

Fig. 18-22

RC Filters – For applications in which a sharp cutoff is not necessary, resistance-capacitance or RC combinations are sometimes used as low- or high-pass filters. For example, Fig. 18-23*a* shows a simple *LC* low-pass filter, made up of a coil in series with the line and a capacitor across it. In part *(b)* of the figure, the coil is replaced by a resistor. If the value of resistance is the same as the inductive reactance of the coil at the cut-off frequency, the *RC* filter will provide the same amount of filtering at that frequency. As previously discussed, the slope of the curve – that is, the rate at which frequencies beyond cutoff are attenuated – is affected by both the in-

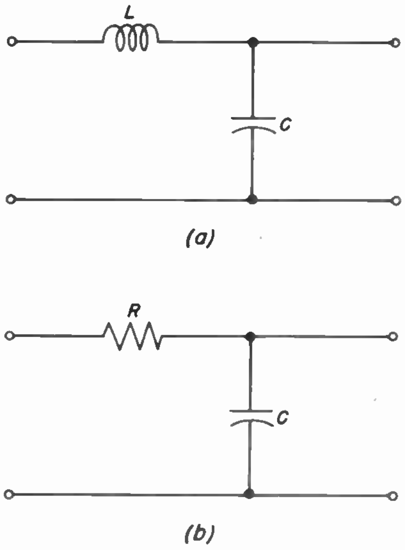

Fig. 18-23

ductive and the capacitive reactance. In the *RC* circuit, however, the resistance is the same at all frequencies, and the shape of the response curve is governed only by the changing capacitive reactance. The *RC* filter, therefore, has a more gradual cutoff than an equivalent *LC* filter. However, since resistors are less expensive than coils, *RC* combinations are frequently used where sharp cutoff is not necessary.

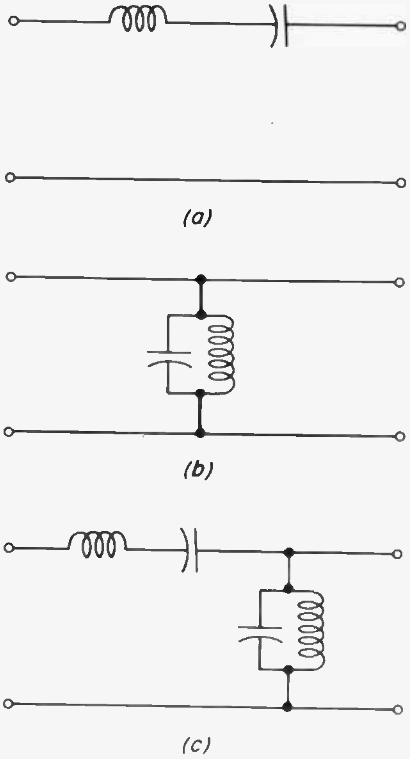

Fig. 18-24

Band-Pass Filters – The band-pass filter must allow signals of a *band* of frequencies to pass through the line, attenuating those of frequencies above and below this band. Recalling the characteristics of series– and parallel-resonant circuits, we can see that either could be used as a simple band-pass filter. For example, Fig. 18-24*a* shows a series-resonant circuit in series with the line. The circuit is resonant at the center frequency of the band to be passed. It thus passes signals of frequencies near the resonant frequency, but offers a high impedance to signals of other frequencies. In *(b)* of the figure, the same effect is achieved by the use of a parallel-resonant circuit across the line. In this case, the circuit offers a high impedance to signals in the band to which it is tuned, and they pass through the line. Signals of other frequencies, however, see a relatively low-impedance path through the parallel-resonant circuit.

To obtain better filtering action, these two circuits are often used together, as shown in *(c)* of the figure.

Band-Elimination Filters – The band-elimination (also known as band-stop, band-rejection, or band-suppression) filter must prevent signals of a particular band of frequencies from passing through the line, but allow all others to pass. The simplest form of band-pass filter would be a parallel-resonant circuit in series with the line, a series-resonant circuit across it, or a combination of the two. The last arrangement is shown in Fig. 18-25. Signals in the undesired band of frequencies are attenuated by the high resonant impedance of the parallel circuit and returned to the source through the low impedance of the series circuit.

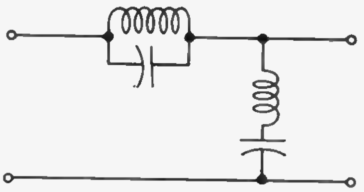

Fig. 18-25

Multisection Filters – The filters we have considered so far have consisted only of a series element and a shunt element. Such filters are often called L-sections, because drawn schematically they resemble the letter L. The L-section may be considered to be the basic filter circuit.

We have seen that a single L-section filter provides some degree of filtering action. However, in practice other filter circuits are also used to provide different filtering characteristics. For example, the L-section low-pass filter

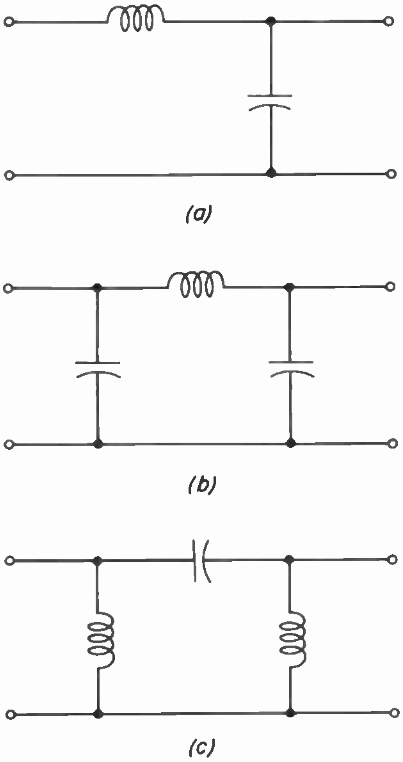

(a)

(b)

(c)

Fig. 18-26

shown in Fig. 18-26*a* may be arranged into a π-section filter by adding a shunt capacitor at the input side. This is shown in Fig. 18-26*b*. A π-section high-pass filter is shown in Fig. 18-26*c*. Note that this filter is composed of an L-section high-pass filter with an added coil at the input side. In a similar fashion, a basic L-section filter may be converted into a T-section filter, by the addition of a series capacitor to the high-pass L-section filter, as shown in Fig. 18-27. A series coil added to the low-pass L-section filter results in a high-pass T-section filter. This is shown in Fig. 18-28.

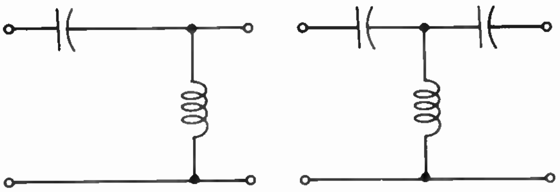

Fig. 18-27

To obtain a sharper cutoff, two or more π-sections may be added. Thus, the

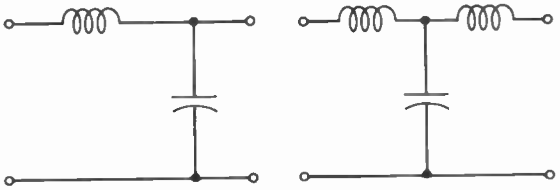

Fig. 18-28

two π-type low-pass filters of Fig. 18-29*a* may be joined to produce a composite two-π-section low-pass filter, shown in (*b*) of the figure. Capacitor C3, in (*b*) represents the sum of the paralleled capacitors C1 and C2 in (*a*). Similarly, the two identical π-section high-pass filters of Fig. 18-30*a* can be connected

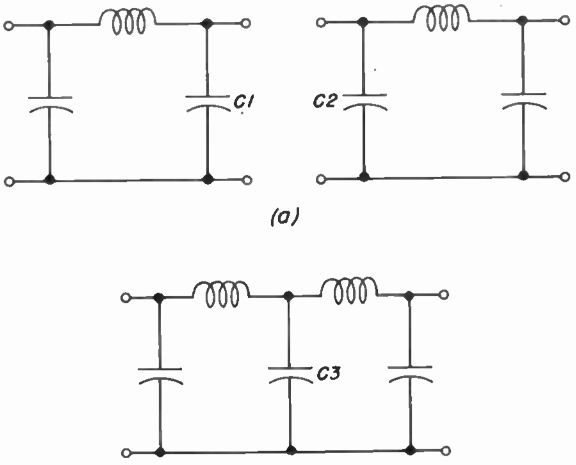

(a)

(b)

Fig. 18-29

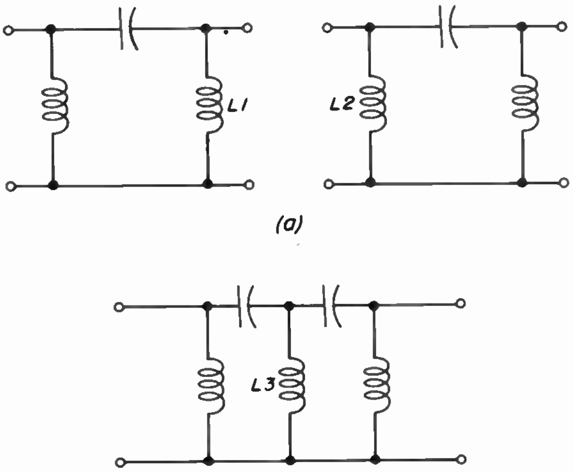

(a)

(b)

Fig. 18-30

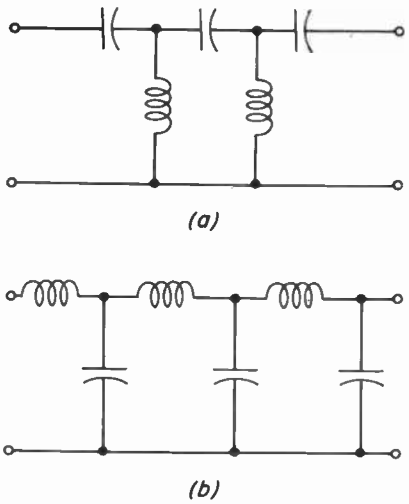

Fig. 18-31

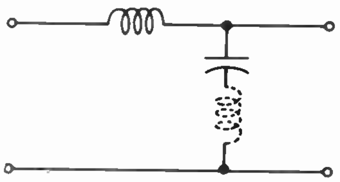

(a) series-derived low-pass

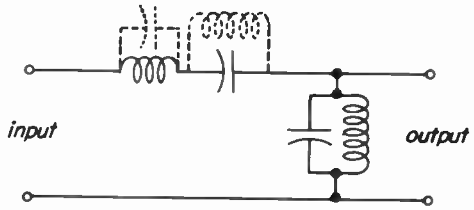

(b) shunt-derived band-pass

Fig. 18-32

as in *(b)* of the figure. If coils *L1* and *L2* are of equal value, coil *L3* will be one-half the value of either *L1* or *L2.*

Multisection high-pass and low-pass filters of the T-type are shown in Fig. 18-31*a* and *b*, respectively.

Even sharper cutoff can be obtained by the use of *m-derived* filter circuits. A complete discussion of these filters is beyond the scope of this lesson; in general, however, it may be said that they are formed by the addition of opposite impedances in either the series or the shunt arms of the basic circuits. This is shown in Fig. 18-32, in which the added impedances are represented by dashed lines. If the extra impedance is added to the series arm, the section is called shunt-derived; if, to the shunt arm, series-derived. By proper choice of these impedances, filters with widely different response curves may be designed. In general, it may be said that the *amount* of attenuation offered by a multisection filter depends upon the number of sections, while the shape of the response curve depends upon the *kinds* of sections used. Sharpness of cutoff also depends, of course, upon the *Q* of the components.

NOTES

SUMMARY OF BASIC FORMULAS

D-C CIRCUITS

Ohm's Law

$E = IR$

$R = \frac{E}{I}$

$I = \frac{E}{R}$

(where E is the applied voltage, I the current, and R the resistance)

Resistance of a conductor in terms of its resistivity, length, and cross-sectional area

$R = \rho\frac{l}{A}$

(where l is the length, A the area, and ρ the resistivity of the conductor)

Resistance and Temperature relation

$R = R_1(1 + aT)$

(where R_1 is the resistance at ordinary room temperature, taken as 20° Centigrade, T the temperature change, and a the temperature coefficient of resistance)

Power Formulas

$P = EI$

$P = I^2R$

$P = \frac{E^2}{R}$

(where P is the power)

Resistances in Series

$R_o = R_1 + R_2 + R_3 + \ldots.$

(where R_o is the total resistance)

Resistances in Parallel

$$R_o = \frac{1}{\frac{1}{R_1} + \frac{1}{R_2} + \frac{1}{R_3} + \ldots.}$$

(where R_o is the total resistance)

A-C CIRCUITS

Frequency

$f = \frac{1}{t}$

(where f is the frequency in cycles per second, and t is the time in seconds)

Ohm's Law

$E = IR$

$I = \frac{E}{R}$

$R = \frac{E}{I}$

(where E is the effective (rms) voltage and I is the effective (rms) current)

Inductive Reactance

$X_L = 2\pi fL$

(where f is the frequency in cycles per second, L the inductance in henrys, and X_L the inductive reactance)

SUMMARY OF BASIC FORMULAS (cont'd)

Capacitive Reactance

$$X_C = \frac{1}{2\pi fC}$$

(where *f* is the frequency in cycles per second, *C* the capacitance in farads and X_c the capacitive reactance)

Time Constant

$$t = RC$$

(where t is the time in microseconds, *C* the capacitance in microfarads and *R* the resistance in ohms)

Inductances in Series

$$L = L1 + L2 + L3 + \ldots .$$

(where *L* is the total inductance)

Inductances in Parallel

$$L = \frac{1}{\frac{1}{L1} + \frac{1}{L2} + \frac{1}{L3} + \ldots .}$$

(where *L* is the total inductance)

Condensers in Series

$$C = \frac{1}{\frac{1}{C1} + \frac{1}{C2} + \frac{1}{C3} + \ldots .}$$

(where *C* is the total capacitance)

Condensers in Parallel

$$C = C1 + C2 + C3 + \ldots$$

(where *C* is the total capacitance)

Impedance

$$Z = \sqrt{R^2 + {X_L}^2}$$

$$Z = \sqrt{R^2 + {X_C}^2}$$

(where X_L is the inductive reactance, X_c the capacitance and *Z* the impedance)

$$Z = \sqrt{R^2 + (X_L - X_C)^2}$$

(For circuits containing both *L* and *C*)

Ohm's Law for Impedance

$$Z = \frac{E}{I}$$

$$E = IZ$$

(where *E* is the applied voltage and *Z* the impedance)

$$I = \frac{E}{Z}$$

Resonant Frequency

$$f_r = \frac{1}{2\pi\sqrt{LC}}$$

(where *L* is the inductance in henrys, *C* the capacitance in farads and f_r the resonant frequency in cycles per second)

Q of a Circuit

$$Q = \frac{X_L}{R}$$

(where X_L is the inductive reactance in ohms and *R* is in series with the coil)

Cut out page along dotted line.

HOME STUDY
TELEVISION
SERVICING COURSE

PREPARED BY
RCA INSTITUTES, INC.
A SERVICE OF RADIO CORPORATION OF AMERICA

HOME STUDY DEPARTMENT
350 West 4th St., New York 14, N. Y.

UNIT FIVE

Lesson 19: VACUUM TUBES
Lesson 20: TRANSMISSION LINES
Lesson 21: RADIATION AND ANTENNAS
Lesson 22: SERVICING APPROACH AND TECHNIQUES

TELEVISION SERVICING COURSE

PREPARED BY

RCA INSTITUTES, INC.
A SERVICE OF RADIO CORPORATION OF AMERICA

HOME STUDY DEPARTMENT
350 West 4th St., New York 14, N. Y.

LESSON 19

VACUUM TUBES

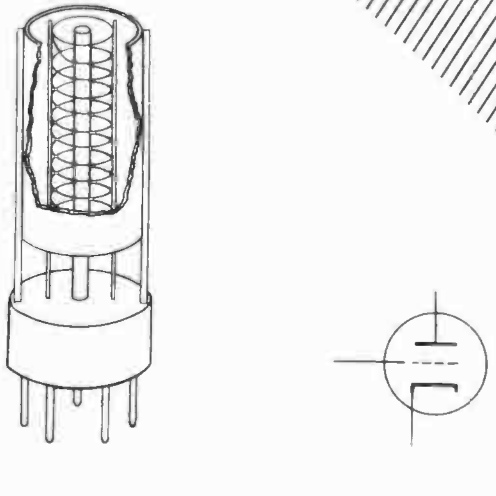

Lesson 19

WHAT VACUUM TUBES DO

19-1. In the course of our study of d-c and a-c circuit principles, you've absorbed, we hope, a sizeable hunk of knowledge about three of the four major classes of circuit components – resistors, inductors and condensers. The purpose of this lesson is to study the principles that govern the behavior of the fourth class of components – vacuum tubes.

It is hard to say which is the most important of these classes. A television receiver needs all four of them. However, the principles governing resistors, coils and condensers were known for a good many years before the advent of radio. But without the discovery and development of the vacuum tube, radio would still be in the dit-dit-dah stage, and television would be just one of the wilder pipe dreams of the science fiction writers. The reason for this is that the vacuum tube is essentially a control device, which permits very small voltages to control the waveforms of much larger voltages. This is what a vacuum tube does when it acts as an amplifier.

Functions of Vacuum Tubes. – In addition to its function of *amplification*, the vacuum tube has two other main functions -- *rectification* and *frequency generation*. Rectification is the process by which an alternating voltage is used to produce a pulsating direct voltage. Thus are the direct voltages required for operating the set obtained from an alternating source voltage. Frequency generation is the process by which the tube produces in its output, new frequencies that are not present in the input. They can be either harmonics of the input frequencies, or, when two signals of different frequencies are applied, the sum or difference of these input frequencies. This function finds its principal usefulness in a TV receiver in the production of the intermediate frequency (i-f) from the received signal and the local oscillator output.

Vacuum tubes have, of course, other functions besides those we have named. They act as detectors, oscillators, clippers, clampers, and so on. But each of these uses is a special case of one of the three main types of operation – amplification, rectification and harmonic generation. If we understand the basic principles of these three, we should have no particular trouble in understanding the part played by a vacuum tube in any circuit we encounter in the television receiver.

Properties of Tubes as Circuit Elements. – Certain fundamental facts about vacuum tubes were pointed out in the final section of Lesson 16. First, they behave under certain circumstances like resistors. But they have their own peculiarities which prevent us from applying to them – at least without a lot of modification – the methods of analyzing resistive circuits that we've so far studied. The first of these peculiarities is that the vacuum tube is a *one-way conductor*. It is this fact that enables a tube to rectify an alternating voltage into a pulsating d-c. Secondly, the current through a vacuum tube is not proportional to the voltage. It is thus a *non-linear element*, which accounts for its ability to generate new frequencies in the output circuit that are not present in the input signal. And thirdly, we learned that the tube may be made as a *variable resistance*, whose resistance value depends on the voltage applied to one of its terminals. This is the property that accounts for the ability of the tube to amplify signal voltages.

With all these peculiarities, it should have suggested itself that the methods we used for studying the behavior of d-c and a-c circuits in the last three lessons might not apply to vacuum tubes. If you've come to this conclusion, you're right. But it isn't quite as hopeless as we may have implied. We'll find that in many cases, we can use what we've learned about circuits so far, to come to some pretty close approximations of the actual results – close enough, at least, that the small error doesn't usually matter.

To justify these approximations, however, we'll have to devote a little attention to what goes on inside a vacuum tube and makes it tick. This will require us to review the basic facts about electricity set forth in the first twelve pages of Lesson 16, and to study one new phenomenon.

WHY A VACUUM TUBE CONDUCTS CURRENT

19-2. In Lesson 16 we stated that any concerted migration of electrons constitutes a current. This is true whether the migration takes place in a wire or in empty space. We've learned something of the mechanism by which a continuous supply of electrons may be supplied to a current-carrying wire. A part of this section will be devoted to an explanation of how electrons can be pried loose from a metal so they are free to traverse a vacuum. But first, let's sketch briefly how a vacuum tube is constructed, and how it works.

Structure of a Vacuum Tube. – A typical vacuum tube is shown in Fig. 19-1.

Fig. 19-1

It consists of a glass or metal shell, or *envelope*, from which practically all the air has been exhausted. In the vacuum thus enclosed are mounted a minimum of two *electrodes*, or *elements*. (We're sorry to have to give that word "element" new meanings all the time, but that's the way it is used.)

One is a metal cylinder, called the *anode*, or *plate*. It is usually connected by a wire to a terminal pin in the base of the tube. Its job is to collect electrons that travel through the vacuum from the other electrode, called the *cathode*. In its simplest form, this is a single thin wire or *filament*. It is suspended by suitable supports inside the cylindrical anode, and its ends are connected to separate terminal pins in the base of the tube. A breakaway view of the assembly is like this:

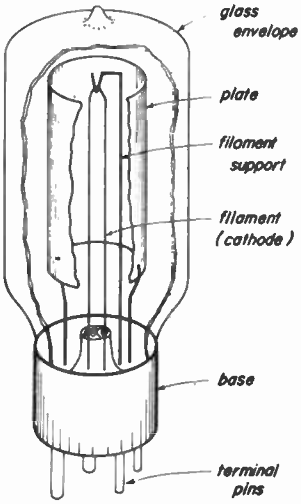

Fig. 19-2

Schematically, the tube would be represented in circuit diagrams thus:

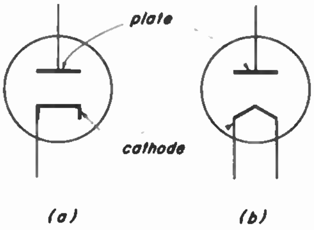

Fig. 19-3

Note that two alternate ways of representing the cathode are used. We'll get to the reason for this later.

Stripped of its trimmings, a vacuum tube is really a very simple device. Let's see how it works.

Essentials of Operation. – When the ends of the filament wire are connected to a battery or other voltage source, the cathode is heated by the current flowing through it. Its surface is composed of a material that gives off, or *emits*, electrons when it is made hot enough. If the anode is now connected to a second battery, so it is positive with respect to the cathode, these electrons are attracted to it.

There is a reason, incidentally, why practically all the air must be exhausted from the tube. If this is not done, electrons collide with air molecules, knocking one or more electrons off each one. Each air molecule is then positively charged, or *ionized*. These positive ions are attracted back to the cathode, which they strike with great force. This *positive ion bombardment* damages the cathode surface, greatly reducing its life. In addition, the electrons knocked off the air molecules then ionize other molecules, in a chain reaction. The result is that much larger amounts of current flow through the tube. In some applications, this is desirable, and various types of *gas filled* tubes are made for specific purposes. But gas filled tubes have the disadvantage that once the tube starts to conduct, the amount of current is not easily controllable. Gas tubes will not be considered in this lesson.

Electrons, then, move from the cathode to the plate inside the vacuum tube, and from the plate back to the cathode through the external circuit, thus:

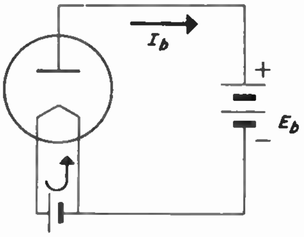

Fig. 19-4

Notice that there are two different currents in the circuit. The electrons that move through the vacuum between cathode and plate are called the *plate current,* and designated I_b. We are not at present concerned with the current flowing in the cathode filament for the purpose of heating it. The plate current electrons flow in the external circuit through the battery E_b. and through both leads to the filament, which are in parallel so far as the plate current is concerned.

The plate circuit is a simple series circuit. The current is the same in all parts of the circuit — through the vacuum, or in the wires. Note that this closed path is necessary for a continuous flow of electrons through the vacuum. It is also worth noting at this point that, in general, the useful work accomplished by the plate current is done *in the external circuit,* not in the tube itself.

If the polarity of the plate battery is reversed, making the plate negative with respect to the cathode, little or no current flows in either direction. Electrons *never* move from plate to cathode inside the tube. The plate can collect electrons, but can't emit them except under special conditions, which will be discussed later in this Lesson. And even in this special case, the electrons emitted by the plate do not reach the cathode.

In we substitute an a-c generator for the battery in Fig. 19-4 current will flow *only* when the plate is positive, thus:

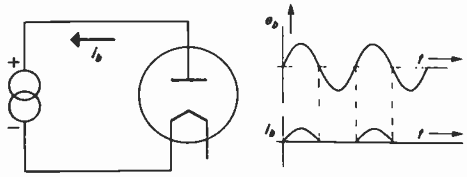

Fig. 19-5

Note that we have omitted from the schematic the battery that heats the cathode. This is usually done for simplicity. It is assumed, however, that the cathode is heated, even though the source of the heating current is not shown in the schematic diagram.

We can now see why the tube is a *one-way conductor.* It acts as an electrical check valve. (In England, in fact, vacuum tubes are called "valves" instead of "tubes".) In doing so, it rectifies the alternating voltage, producing from it a pulsating direct current. This is one of the main control functions of vacuum tubes. They control not only the amount of current flowing in their plate circuits, but its direction as well.

Thermionic Emission. — Now that we've had a brief preview of what a simple vacuum tube does, let's return to the process by which the cathode is made to give off electrons when hot, and examine the mechanism of this phenomenon more carefully.

We know that metals contain billions of electrons that move about from one molecule to another inside the metal, because the attractive forces of the positive nuclei tend to balance each other. But when an electron reaches the surface, there is no external force to balance the attractive force of the nuclei at the surface. The electron hasn't enough energy to overcome this force, so it stays in the metal, thus:

Fig. 19-6

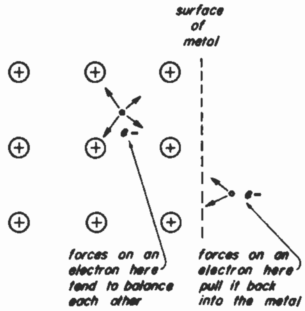

However, if the metal is heated sufficiently, many electrons will acquire enough additional energy to enable them to escape from the surface of the metal — just as a rocket, if given enough energy in the right direction, could escape from the gravitational pull of the earth and sail off into space on its own. The process by which electrons are freed from the pull of the positive nuclei in a metal by heat is called *thermionic emission,* and the electrons are said to have been *emitted.*

Electron emission is analogous to the boiling or evaporation of water, in which water molecules are released from the surface of the water in the form of steam or water vapor. The two processes are not identical, though, for in the case of electron emission, only the electrons, not whole molecules of metal, are emitted.

Suppose we have a metal surface in a vacuum, and the surface has been heated sufficiently to emit electrons. What becomes of the electrons? And how long can the emission continue?

The answer to the first question is that the electrons hang in a "cloud" near the emitting surface, thus:

Fig. 19-7

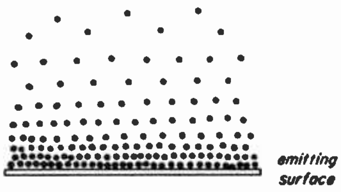

This "cloud" is called a *space charge.* We'll have more to say about it when we come to discussing practical tubes.

The Space Charge. –The "cloud" is densest next to the metal surface. There are two reasons for this. Remember that electrons are negative charges. Each electron repels each other electron. Those emitted first exert a force on the later emitted electrons, tending to push them back toward the metal. Also, as the metal loses more electrons, it becomes more positively charged. This sets up a field about the metal, which exerts a greater and greater force of attraction on the electrons near the surface as more and more electrons are emitted. This makes it more difficult for electrons to escape.

This leads us to the answer to our second question. Eventually, the forces of attraction and repulsion are balanced, so that no more electrons can be emitted unless one or more of three things takes place: (1) the temperature of the emitting surface is increased, thus adding heat energy to the electrons at a faster rate; (2) electrons are removed from the space charge, thus reducing the force of repulsion it exerts on electrons at the surface; (3) electrons removed from the metal are replaced, neutralizing the positive charges on the metal, and reducing the forces of attraction between the metal and the electrons in the space charge. Take careful note of these three conditions, as they are all important in understanding why a vacuum tube works as it does.

Emissive Materials. – Theoretically, electrons can be emitted by any metal, if it is made hot enough. However, most metals melt before electron emission takes place in useable quantities. Also, metals differ widely in the amount of heat energy required to cause them to emit. One metal that has a high melting point, and emits fairly freely, is *tungsten,* the same material that most lamp filaments are made of. It gives useful emission at a temperature of around 2500 degrees Centigrade. If the tungsten is coated thinly with another metal called *thorium,* the operating temperature is reduced to about 1600 degrees Centigrade. Even lower operating temperatures – around 700 to 1000 degrees Centigrade – may be used with *oxide coated* cathodes. In such cases, the emissive surface is not metal at all, but a mixture of oxides, mostly those of barium and strontium, which is applied as a coating on a metal base.

There is a considerable advantage to using emissive materials that can be used at relatively low temperatures. In practice, the operating temperature is maintained by an electric current, and the higher the temperature required, the more power is consumed. For this reason, oxide coated cathodes are used whenever possible. Most small tubes used in TV and radio receivers employ oxide coated cathodes. There are certain disadvantages to oxide surfaces, which we need not go into here, which render them unsuitable in certain applications.

The higher the temperature to which the cathode is heated, the more electrons are emitted. The relation is not a proportional one, however. A graph of electron emission against temperature is like this:

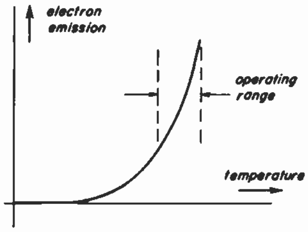

Fig. 19-8

You will note that no measurable emission is obtained at low temperatures. As temperature is increased, emission increases gradually at first, and then very rapidly.

Indirectly Heated Cathodes. – Instead of passing the heating current through the cathode filament, the cathode is often made in the form of a hollow metal tube. A twisted filament is inserted in the tube, and its wires insulated from each other and from the tube. A current passed through the filament – which is now known as a *heater* – heats the tube to emission temperature. The tube is usually coated with emissive oxides, so it can be operated at a lower temperature. This type of cathode is called an *indirectly heated cathode,* and is much more common in small vacuum tubes than the simpler directly heated cathode described earlier. A breakaway view of the cathode assembly, and the schematic representation of the tube, are like this:

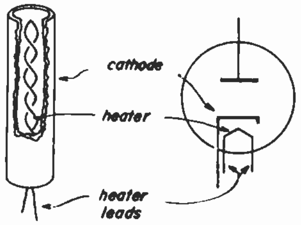

Fig. 19-9

Two-element tubes having indirectly heated cathodes are equipped with four base pins as terminals – two for the heater, one for the cathode and one for the plate.

Since the plate current and heater current are entirely independent, neither flowing in any element carrying the other, it is customary on schematic circuit diagrams to omit the heater altogether, showing only the plate and cathode as in Fig. 19-3 (a). This independence of the plate current from the heater current is the principal advantage of the indirectly heated cathode. The heater can be supplied from an a-c source, and the alternating heater voltage will have little or no effect on the plate current.

THE DIODE AS A RECTIFIER

19-3. The two-element tube we have been studying is called a *diode.* It is the simplest form of vacuum tube. Later we'll study the effect of additional electrodes, and applications of more complicated tubes. But before we do that, we'll have to go a bit further in our study of the diode, whose principles of operation are basic for all vacuum tubes.

Let's review the facts we already know. When the cathode is heated, it emits electrons, which cluster in the vacuum surrounding the cathode in a sort of electron cloud, called the space charge. The higher the cathode temperature, the more electrons are emitted, and the denser is the space charge. When the plate is connected to a positive voltage source, the space charge electrons, being negative charges, are attracted to the positively charged plate. If the negative terminal of the voltage source is connected to the cathode, a closed circuit is formed, and a continuous plate current flows. We also saw in Fig. 19-5, that the amount of plate current is related to the voltage across the tube. Now we'll examine these phenomena a little further.

Consider the question of where the plate current electrons come from. Of course, they come from the cathode. But do they move immediately from the cathode to the plate? That is, does the cathode supply immediately just the number of electrons required for the plate current? Does it always supply an adequate number? Or does it supply a surplus?

Function of the Space Charge. – Under normal operating conditions, the space charge acts as a *reservoir of free electrons,* to be drawn upon by the plate as required. The space charge electrons are replaced from the cathode at a more or less constant rate, governed by the cathode temperature. When a small voltage is applied to the plate, a small number of electrons is attracted to the plate from the space charge. As the plate voltage increases, the number of space charge electrons moving to the plate also increases. But there is a limit. If the plate voltage gets high enough to draw to the plate *all* the electrons in the space charge, a further increase of plate voltage cannot extract an appreciable number of additional electrons from the cathode. The rate of *emission,* as we have noted, is governed largely by the cathode temperature, not by the plate voltage. The plate voltage does, however, control the *number of electrons drawn from the space charge to the plate.*

The manner in which these two factors affect the plate current is shown in the following graph:

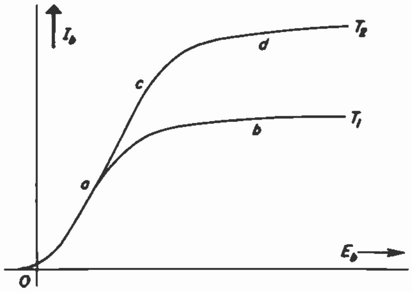

Fig. 19-10

At a given cathode temperature, T_1, the plate current will increase rapidly with increasing plate voltage, as shown by the curve from *O* to *a.* At point *a,* however, nearly all the emitted electrons are moving to the plate immediately. Further increase of the plate voltage produces very little more plate current, which increases along the curve from *a* to *b.* If, however, when the plate current is represented by point *a* on the curve, the temperature is increased to T_2, a further increase of plate voltage produces a substantial increase in plate current, as shown by the curve from *a* to *c.* Again the curve flattens out from *c* to *d* as the plate voltage is increased, because the plate is taking virtually all of the space charge.

Temperature Saturation. – When the plate voltage is high enough to draw electrons to the plate as fast as they are emitted, the plate current is said to be *temperature limited,* and the condition is called *temperature saturation.* When the cathode temperature is high enough to enable the cathode to emit electrons faster than the plate can drain them away, the plate current is *space charge limited.* This is the usual operating condition. When this is true, the plate current will vary in accordance with the plate voltage.

Diode Characteristic. – Provided temperature saturation is not reached, the variation of plate current, I_b, with plate voltage, E_b, follows a curve like the solid line in the following graph:

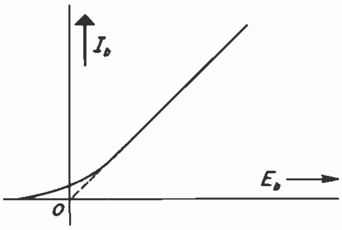

Fig. 19-11

You will recall from Lesson 16 that such a curve is called a *characteristic curve,* or just *characteristic.*

There are a few points about the characteristic of a diode that can stand a little more explanation.

You will note that when the plate voltage is zero, the plate current is not quite zero. In fact, there is a little plate current flowing even when the plate is slightly negative. The reason for this is that the electrons have a small *emission velocity* as they leave the cathode. A few of them will reach the plate by reason of this initial velocity, even though the plate is not positively charged. It takes a slight *negative* voltage on the plate to repel *all* of the emitted electrons, and so reduce the plate current to zero. This value of voltage is called the *cutoff voltage* of the tube.

Notice also that the characteristic is not quite linear. That is, the plate current is not quite proportional to the plate voltage. This means that the effective resistance of the tube is not constant, as was explained in Lesson 16.

D-c Plate Resistance. – When we speak of the "resistance" of a diode, we may have to rearrange our ideas of what a resistance is. It is obvious that a vacuum does not have resistance to the passage of electrons through it in the same sense that a solid piece of copper or carbon does. But if we remember Ohm's Law defines resistance as the ratio of voltage to current – R=E/I – it is equally obvious that this ratio has some definite value for any value of the plate voltage of a diode for which plate current flows. This value is called the *d-c plate resistance* of the tube. It may be found from the tube characteristic for any value of voltage, by the process explained in Sec. 16-9 of Lesson 16, thus:

$$\text{d-c plate resistance} = R_b = \frac{E_b}{I_b}$$

Although the characteristic curve is not quite linear, it is nearly so. Therefore we can consider that R_b is nearly a constant resistance, and treat the diode as though it were a resistor differing in no way from a physical resistance wire except that it will pass current in only one direction. Then its characteristic would be as shown by the dotted line instead of the solid one in Fig. 19-11. We'll offer further justification for this approximation later.

Typical values of the d-c plate resistance of a diode are between 2000 and 10,000 ohms. This means that the maximum plate current may be of the order of 50 to 100 ma., and the maximum plate voltage several hundred volts. There is, of course, wide variation in these values among specific practical tubes.

Ordinarily, we are more concerned in diode operation with how the plate current *varies* for particular variations in plate voltage, than we are in actual values of d-c plate resistance. Therefore we'll take a little time out to explain a method by which we can examine graphically just how a tube will behave when a particular signal is applied to it.

Voltage and Current Waveforms.– Suppose we have a diode connected to a source of sinusoidal voltage, as shown in Fig. 19-5. Assuming that we know the shape of the tube characteristic curve, we can sketch the waveform of the plate current thus:

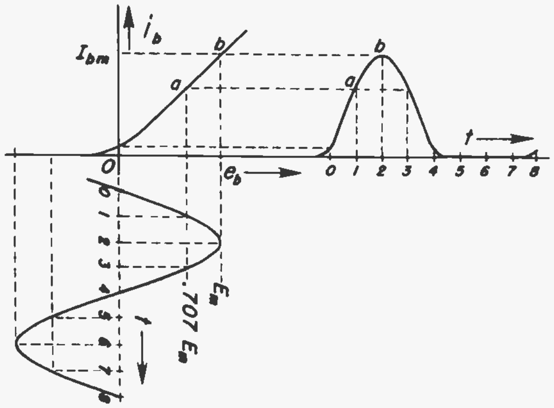

Fig. 19-12

What we've done here is to superimpose two graphs – one showing i_b against e_b, and another showing e_b against time. (The symbols E_b and I_b stand for steady plate voltage and plate current. The small letter symbols, representing instantaneous values, are used when the source voltage is a varying one.) We have done this by extending the vertical axis of the tube characteristic curve downward, and using this extension as the zero axis for a time graph of the applied voltage. Then we have projected several points on the time graph, equidistant in time, up to the current curve. Thus point *a* on the characteristic shows the value of i_b corresponding to point *a* on the voltage graph; point *b* indicates the peak value of the plate current, which of course occurs when the plate voltage is maximum; and so on. Finally, we have projected the points on the characteristic curve horizontally, using the horizontal axis as a second time axis for a current graph. By laying off equal time intervals, corresponding to the time intervals shown on the voltage graph, we can locate points representing the plate current at any instant. Thus we have constructed the waveform of the plate current resulting from a sinusoidal voltage of peak value E_m, applied to this particular diode.

Biased Diode Operation. – We will use a variation of this method later to determine the output waveform of a triode amplifier. But for now, let's examine one more application of this method. We'll apply to our diode a video signal, in series with a d-c voltage, thus:

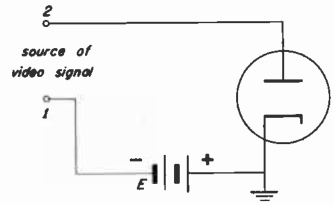

Fig. 19-13

Now we will construct on paper the current waveform resulting from this circuit, like this:

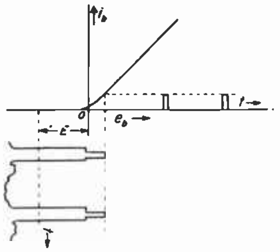

Fig. 19-14

We've assumed that the video signal has had its d-c component removed, so its average value is zero. Then we drew its graph on a vertical time axis -- but instead of using zero plate voltage as the time axis, we used the d-c battery voltage, E. Referring back to Fig. 19-13, you will see that terminal *1* is always E volts below ground. So at any instant that the video signal is zero, terminal *2* (and the diode plate) are at minus E volts with respect to ground. The plate voltage will swing above and below this value. But only when the instantaneous value of the signal is positive by an amount greater than E will the diode plate become positive with respect to the cathode. It is only in these intervals that the diode will conduct current.

These facts are indicated graphically in Fig. 19-14. Again we have projected horizontally from the tube characteristic to obtain the time graph of the plate current, which we find now to be a series of narrow square pulses – the sync pulses.

The battery voltage E would be called a *bias voltage*. It is a *negative* bias voltage because it places the plate at a negative voltage with respect to the cathode when the applied signal is zero. Here, the *biased diode* is acting as a simple form of *clipper*. It has clipped the sync pulses off the top of the video signal, and delivered them alone in its output.

Need for Voltage Output. – So far, we have considered only the variations of the plate current of a diode. Usually, however, what we want is a *voltage* output. We can't get it from any of the circuits so far considered. Thus, in Fig. 19-5, the only voltage in the circuit is the voltage across the tube. This is a sinusoidal a-c voltage, identical with the applied voltage. What we want is a *rectified* voltage, having a waveform like that of the current.

Here's where we can kill two birds with one stone – obtain a rectified voltage output, and substantially overcome the non-linearity of the tube characteristic. Suppose we connect a resistor in in series with the tube and a-c source, like this:

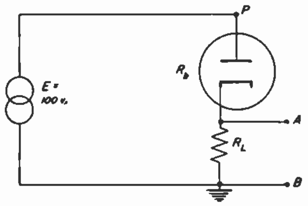

Fig. 19-15

Suppose further, that this *load resistor* (designated R_L) has a value of 18,000 ohms, and that the d-c plate resistance of the diode (R_b) is approximately 2000 ohms (remember that it varies somewhat, due to the nonlinearity of the characteristic curve.) The applied voltage of 100 rms volts is now applied to a series circuit of approximately 20,000 ohms total resistance. (At least, this is true during the positive half-cycles of the voltage.)

During the negative half-cycle of the voltage, point *P* is below ground, so no current can flow. Hence there is no voltage drop across R_L, point *A* is at ground potential, and the entire applied voltage is across the tube, which acts as an open circuit. As soon as *P* becomes positive, plate current flows. At the peak of the applied voltage, *e* is 141 volts ($100\sqrt{2}$).The current is $i = e/R = 141/20{,}000 = 0.00707$ amp. = 7.07 ma. At this instant, the voltage drop across R_L is $0.00707 \times 18{,}000 = 127.5$ volts. This is the potential of point *A*. The peak voltage across the tube is $141 - 127.5 = 13.5$ volts. The variations of the potentials of points *P* and *A* over a full cycle are like this:

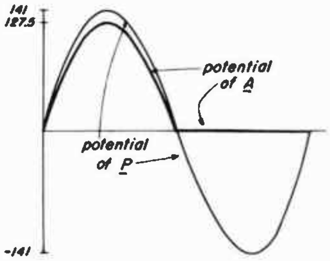

Fig. 19-16

The voltage across R_L – that is, the potential of point *A* with respect to ground – has given us the rectified voltage output we wanted. But now consider the effect of the non-linearity of the tube. The d-c plate resistance of the tube, R_b, is now only 1/10 of the total resistance in the circuit. Hence, a variation of 10% of R_b, due to the non-linearity of the characteristic, would constitute a variation of only 1% in the total circuit resistance. Hence, the non-linearity of the tube characteristic curve has negligible effect on the output current and voltage. Since diode rectifiers are customarily used with load resistors having an appreciably higher resistance than the d-c plate resistance of the tube, we are justified in assuming a linear characteristic for the tube. Even though this isn't so, the final results are about the same as though it were so.

Rectifier Circuits. – The rectifier circuit shown in Fig. 19-15 is called a half-wave rectifier, because only half of the applied voltage wave produces an output voltage. It is possible, as we will learn when we study TV power supplies, to convert this pulsating d-c into a substantially steady d-c, by the use of *filters*. A smooth, steady d-c output is easier to obtain, however, from a *full-wave rectifier*. This consists of two diodes, connected to a transformer and load resistance as shown in Fig. 19-17, below.

The center point of the transformer secondary winding is grounded. Thus, when a sinusoidal current flows in the primary, the voltage induced in the secondary causes the ends of the secondary to be of opposite polarity at any one instant. When the plate of V_1 is positive (as it is when the polarity of the secondary voltage is as shown in the figure), V_1 conducts, while V_2 is cut off. On the next half-cycle, the secondary voltage polarity is opposite to that shown, and V_1 is cut off while V_2 conducts. Thus the two diodes conduct alternately. But the plate currents of both tubes flow in the load resistor, and in the same direction. The resulting waveform of the current in R_L – and hence of the output voltage – is shown in the figure.

Summary. – We can summarize the essentials of our discussion of diode operation as follows:

1. Electrons flow only from cathode to plate inside the diode, and only when the plate is positive (or very slightly negative).
2. Plate current is nearly proportional to plate voltage, so long as the space charge is not drained of all its electrons.
3. Temperature saturation occurs when all electrons go to the plate as soon as they are emitted. Under this condition, further increase of plate voltage results in very little more plate current.
4. A load resistor is necessary to develop the required output voltage. It is usually several times larger than the d-c plate resistance of the diode.
5. When an alternating voltage is applied to a diode, only the positive portions of the input waveform appear in the output.
6. A signal may be "clipped" at any level by the insertion of a d-c bias voltage of proper magnitude in series with the signal source and the diode.
7. Two diodes may be connected so that one conducts while the other is cut off. Such a circuit is a full-wave rectifier.

OTHER DIODE APPLICATIONS

19-4. Practically all applications of the diode depend basically on its ability to rectify an applied voltage – that is, to deliver an output current or voltage that is a pulsating d-c, when the applied voltage is alternating. But there is a considerable variety in the ways in which this pulsating d-c is used. We have already seen one such variation – the biased diode clipper. It will give us an appreciation of the versatility of this simple tube if we examine a few other applications.

The Diode Detector. – We will learn in Lesson 21 that a radio or television signal, as sent out by the transmitter, is an *amplitude-modulated* wave. This may be regarded as a high frequency sine wave whose amplitude varies from one cycle to the next in accordance with some *modulating signal.* In radio broad-

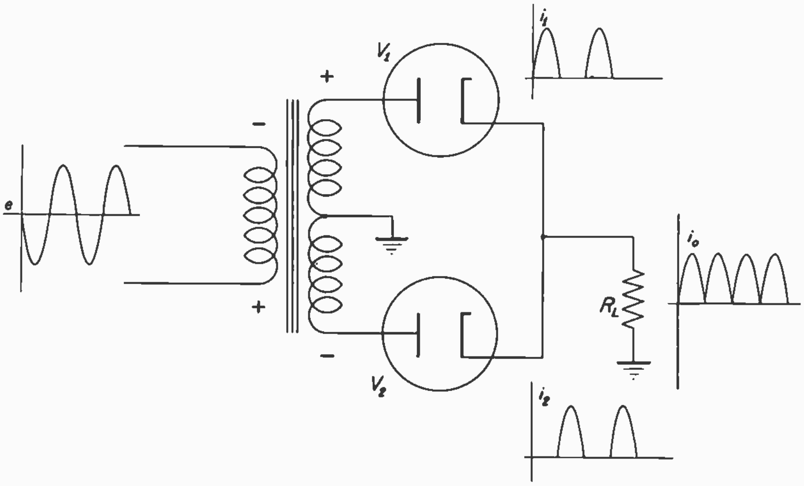

Fig. 19-17

casting, the modulating signal is the sound signal. In television, it is the composite video signal, consisting of the picture information, plus the blanking and sync pulses. In order to operate the receiver, it is necessary that a duplicate of the modulating signal be developed from the modulated high frequency wave received. The process of doing this is called *detection* or *demodulation.*

The simplest form of *detector* is our old friend the diode rectifier. In actual practice, of course, there are "trimmings" in the form of auxiliary circuits for certain purposes. But the principles of diode detection itself is easily understood in terms of what we know about rectification.

Let us project on a diode characteristic, which we shall assume linear, an r-f wave modulated by an a-f (audio frequency) sine wave. The plate current will have the form of a series of half sine waves, varying in amplitude, thus:

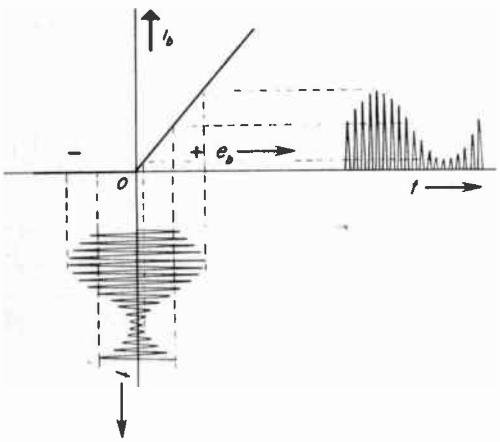

Fig. 19-18

As we have drawn the signal graph, there are only about 15 cycles of the r-f wave to one cycle of the modulating sine wave. In practice, the ratio would be much higher – perhaps several thousand to one.

Consider the current wave form. Each half-cycle pulse has a d-c, or average, value, that is equal to $2/\pi$ times its peak value. Over any full r-f cycle, the average value of the current is half of this or $1/\pi$ times the current peak, since for the second half-cycle the current is zero. Numerically, this figures to 0.318 times the peak. But since the peak current changes from one r-f cycle to the next, so does the average – if we consider the average for one or two r-f cycles at a time. Let us indicate on the current graph the average of each r-f cycle, and then connect these average values with a smooth curve, as in Fig. 19-19.

This "varying average" is a *component* of the plate current wave, and it has the same frequency and waveform as the sine wave modulating signal. It is, in other words, the signal we want to extract from the modulated wave. (Appearances to the contrary notwithstanding, it can be proved mathematically or experimentally that the modulating frequency is *not* a component of the modulated wave before detection.)

Fig. 19-19

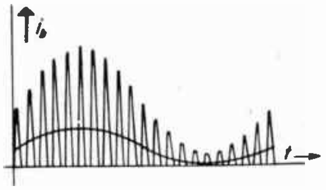

Now suppose we apply the modulated wave to a diode rectifier, in which we have shunted a by-pass condenser across the load resistor, like this:

Fig. 19-20

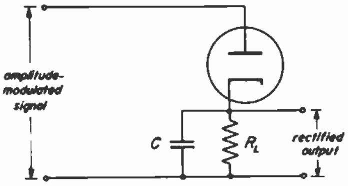

The capacitance of the condenser is so chosen that it has a very low reactance to the radio frequency but a high impedence, relative to R_L, to the modulating frequency. Thus the low frequency component of the plate current flows largely in the resistor, and the higher r-f components in the condenser. The resulting waveform of the voltage across R_L is like this:

Fig. 19-21

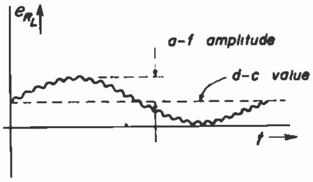

This output voltage corresponds, except for its d-c component and slight r-f ripple, to the modulating sine wave. In practice, the ripple would be further reduced in a RC filter network, and the final output applied to an amplifier. The amplifier has a frequency response of its own, and its output would contain no detectable trace of the r-f.

The Diode as a Limiter. – In detecting (demodulating) a frequency-modulated signal, such as the FM sound signal used in television, the detector output should depend on the variations in the *frequency* of the r-f signal, and should not respond to any random variations in its amplitude. Since many

FM detectors *do* respond to amplitude variations, it is necessary to *limit* the amplitude of the detector input signal to some constant value.

Although the diode is usually operated so that the current is limited only by the plate voltage, it is possible to take advantage of the fact that peak emission, governed by the cathode temperature, places an upper limit on the plate current. So used, the diode becomes a *limiter*. Its operation may be best understood by considering a projection of a sine wave signal of varying amplitude on the tube characteristic, thus:

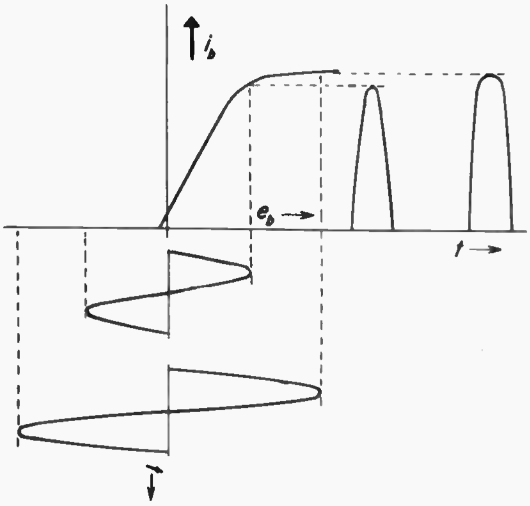

Fig. 19-22

The tube is so operated, either by using a large signal amplitude, or by reducing the cathode temperature by reducing the heating current, that the plate current rises to the point of temperature saturation. The normal amplitude of the signal will produce a current close to this value. But when the signal amplitude increases, the increase in the current amplitude is negligibly small, as shown in the figure.

The rectification of the signal can be avoided, and both positive and negative half-cycles reproduced in the output, by applying the signal in series with a positive bias voltage such that for zero signal, the plate current will be about half the temperature saturation value. The circuit would be like Fig. 19-13, but with the polarity of the battery reversed, The limiting action of the tube would be like Fig. 19-23.

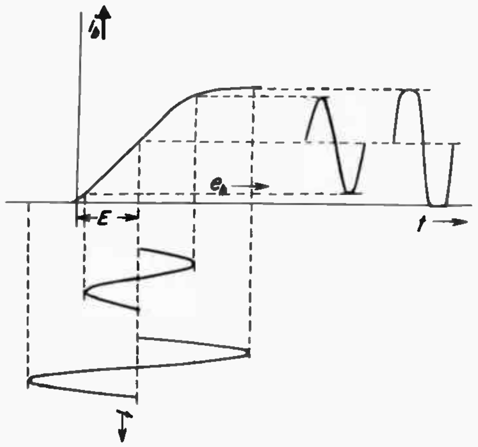

Fig. 19-23

The Diode Clamper Circuit. – The last diode application we shall consider is called a *clamper* circuit, because it may be said to "clamp" a varying signal at its peak value, delivering a direct voltage substantially equal to the positive maximum value of an applied a-c. An important use of the principle of the clamper circuit is in the *d-c restorer* of a TV receiver. A simpler application to understand at this point, however, is its use in the *diode probe* of a vacuum tube voltmeter.

The purpose of the diode probe is to enable us to use a d-c voltmeter to measure alternating voltages, especially r-f voltages. A cross-section view of the probe looks like this:

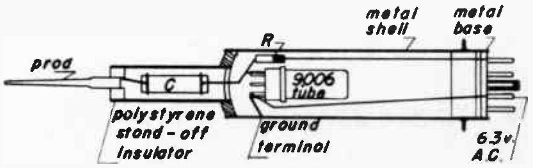

Fig. 19-24

The components of the probe, together with the input resistance of the voltmeter, form this circuit:

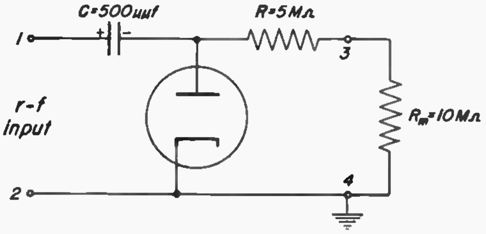

Fig. 19-25

On the positive half-cycle of the applied r-f, the potential of terminal 1 rises with respect to terminal 2. Since the voltage across the condenser cannot change instantaneously, the diode plate also goes positive. The diode therefore conducts, charging the condenser to the peak positive voltage in the polarity shown.

When terminal *1* goes negative, the diode plate also goes negative. Hence, the diode cannot conduct.

The condenser starts to discharge through R and R_m. But note that the time constant of this discharge circuit is RC $= 500\,\mu\mu f \times 15$ megohms $= 7500$ microseconds. This is much longer than the period of an r-f wave. A voltage wave of 25 kc, for instance, has a period of $1/25{,}000 = 40$ microseconds. Hence the condenser loses only a tiny fraction of its charge – and voltage – by the time the next positive half-cycle recharges it fully.

The charging time constant is much shorter. It is R_bC, where R_b is the d-c plate resistance of the diode. If we assume this to be around 2000 ohms, then the charging time constant is only 1 microsecond – fast enough for the condenser to become fully charged in a few cycles, if not in one cycle.

The diode conducts for only a very small fraction of each r-f cycle – just long enough to replace the small amount of charge that has leaked off the condenser. The rest of the time, the condenser acts like a d-c battery, with a voltage nearly equal to the positive peak value of the applied r-f voltage. This direct voltage, less the drop in the 5 megohm probe resistor, is the voltage across terminals *3-4*, where it is applied to the vacuum tube voltmeter. (R_m in the figure is the input resistance of the meter itself. In the case of vacuum tube voltmeters, this is a very high value.)

HOW A TRIODE WORKS

19-5. Versatile as it is, there is one important job that a diode will not do – amplification. No matter what kind of a varying voltage we apply to a diode, the output signal is always less than the input. In order to *amplify* a voltage or current, we must use a tube with at least three elements.

Structure of A Triode. – A *triode* is a tube containing three electrodes – cathode, plate and *grid*. (Note that the heater of an indirectly heated cathode is not counted as an electrode.) In construction, the triode is much like a diode, with the addition of the third element – the grid. In its usual form, the grid is a spiral (more properly called a helix) of wire, suspended in the space between the cathode and plate, as in Fig. 19-26.

In schematic diagrams, a triode is represented by a symbol like that of the diode, with a broken line inserted to represent the grid, as in Fig. 19-27.

Function of Grid. – The purpose of the grid is to control the plate current in accordance with a signal voltage applied to the grid. For this reason, it is also called the *control grid*. In order to function, it is necessary that the grid be placed at some definite potential – positive or negative, fixed or varying – with respect to the cathode. If the grid potential varies, the plate current will also vary, since the plate current now depends on the simultaneous effect of *two voltages* – the plate voltage and the grid voltage.

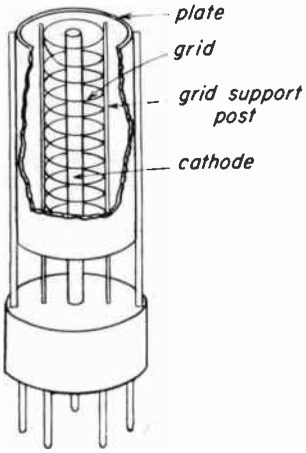

Fig. 19-26

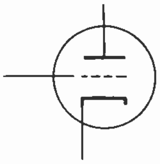

Fig. 19-27

Our present problem is to find out just how and why the grid controls the plate current. In explaining the operation of a diode, we stated that the electrons in the space charge were *attracted* to the positively charged plate. But suppose, in a triode, both the grid and plate are positive. The electrons will be attracted by *both* electrodes. What determines which influence governs? Also, in order to control the plate current, it is necessary that the grid permit some electrons to get through to the plate, and push others back into the space charge. In order to understand these matters, we'll have to go a little deeper into the forces acting on the space charge electrons. This means a study of the electric field in the interelectrode space.

Interelectrode Fields. – Suppose we were to pass an imaginary plane down through the center of the triode in Fig. 19-26. The intersection of the plane with the tube elements would be a cross-section of the tube, like this:

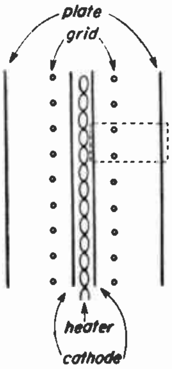

Fig. 19-28

We are going to study the electric field in the small portion of this section indicated by the dotted line. Whatever goes on in that little area will be representative of what goes on in the entire inter electrode space.

Back in Lesson 16, we developed the idea of an *electric field* as a region of space in which a *force* would be experienced by electrons and other charged bodies.

We found we could map such a field by drawing *field lines* which would everywhere point in the direction of the force exerted by the field on a positive charge. Each such line is imagined as beginning on a positive charge, and ending on a negative charge. The direction of each line is indicated by an arrowhead, pointing from the positive end to the negative end. Bearing these conventions in mind, let's start mapping the electric field in the region bounded by the dotted rectangle in Fig. 19-28. We'll make one change in the conventions, however. Since we are dealing with electrons, we'll *reverse the field line arrows,* so they indicate the direction of the *force on an electron,* toward the positive end.

We'll start with the condition that the grid potential is zero – that is, the same as the cathode potential. This is easily achieved by connecting the grid and cathode terminals of the tube together. We assume, of course, that there is a positive voltage on the plate of the tube – say 200 volts. We shall consider this voltage to remain constant as we examine the effect of changing the grid voltage. Our field map with zero grid voltage will be like this:

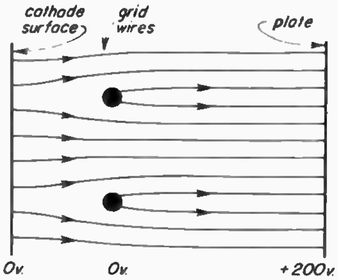

Fig. 19-29

Let's consider what this diagram indicates. Any electron emitted from the cathode encounters a region in which it experiences a force propelling it toward the plate. This is indicated by the field lines extending from the cathode to the plate. This field tends to pull the electrons between the grid wires to the plate, so they do not, in general, strike the grid wires.

The field map also shows some arrows from the grid wires to the plate, but none from the cathode to the grid wires. A little thought will explain why this is a correct representation of the field. Remember that the force on an electron – represented by a field line – is always toward a point of higher (more positive) potential. It follows from this that the potential along any field line varies continuously from its negative to its positive end. If we drew a field line from the cathode to a grid wire, it would mean that there was a force between the two ends of the line, and that the cathode and grid were at different potentials. But this is not so – they are electrically connected outside the tube, so they are at the same potential. That is why no field lines are drawn between the cathode and the grid.

It also follows from this that, although the grid wires themselves are at zero potential, the spaces *between* the grid wires are not. In these spaces, the field lines extend from a surface at zero potential to one at +200 volts. Hence, each point along these lines must be at a potential greater than zero.

The field represented by the lines from the grid wires to the plate has no part in *starting* electrons toward the plate. But if an electron that has already passed between the grid wires strays into the region of the grid-plate field, this field will act to propel it on its way to the plate. So far as determining the rate at which electrons are started from the cathode toward the plate, the important thing is the extent, strength and direction of the field *at the cathode surface.*

So far, the triode behaves just like a diode. With zero voltage on the grid, the amount of plate current is regulated solely by the plate voltage, as long as the space charge can continue to act as a reservoir of free electrons.

Effect of Space Charge. – It might be well to digress for a moment and consider the effect of the space charge on the interelectrode field. Since the space charge is merely a concentration of negative charges, it sets up its own field, whose force acts to push electrons away from the space charge in both directions – that is, toward the cathode as well as toward the plate. The field map, again with zero grid voltage, is actually more like this:

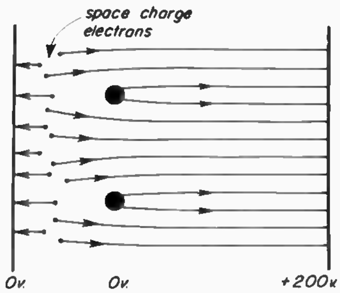

Fig. 19-30

From the direction of the arrows on the field lines, we can see that the electrons nearest the cathode tend to fall back toward the cathode, while those nearest the plate experience a force toward the plate. All the field lines, it will be noted, end on space charge electrons, and none actually extend from the cathode to the plate as we showed them in Fig. 19-29. The outer "surface" of the space charge thus becomes the *virtual cathode* from which the plate current electrons are drawn. As electrons are removed from this region, the space charge becomes less dense, and its tendency to push emitted electrons back to the cathode is lessened. Newly emitted electrons are thus able to replace those drained off, maintaining a continuous supply of electrons at the virtual cathode.

The operation of the grid, it should be clear, will be substantially the same, whether the plate current electrons are drawn directly from the cathode surface, or from the virtual cathode formed by the space charge. So for simplicity, we can correctly consider that Fig. 19-29 represents the effective field in the tube, if we bear in mind that under normal operating conditions, the cathode shown therein really represents the virtual cathode formed by the space charge.

Negative Grid Potential. – Suppose now that the grid is made somewhat negative – say 15 volts – with respect to the cathode. This is most easily accomplished by means of another battery thus:

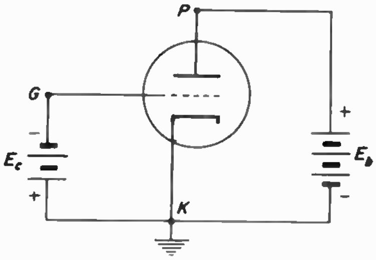

Fig. 19-31

The field map for this condition would be something like this:

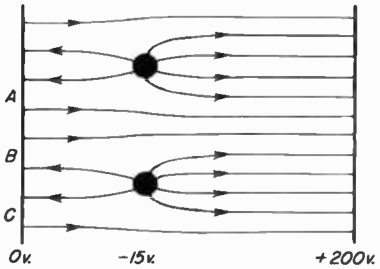

Fig. 19-32

We find now that some of the arrows terminating on the cathode point toward it, and some away from it. An electron emitted from a spot on the cathode between points *A* and *B*, for instance, would be propelled between the grid wires, toward the plate. But an electron emitted between points *B* and *C* would encounter a *retarding field,* and would be held by this field in the space charge. Under this condition, it is obvious that the plate current – that is, the number of electrons reaching the plate from the cathode – would be smaller than before.

If the grid potential were now made even more negative, the plate current might be cut off altogether. Thus, with a grid voltage of minus 30 volts, the field map might look something like this:

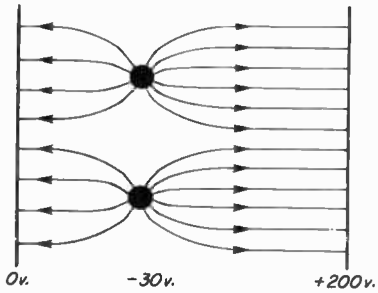

Fig. 19-33

Now, *all* the emitted electrons would encounter a retarding field, no matter from what point on the the cathode they were emitted. None, therefore, could possibly reach the plate unless it had sufficient emission velocity to overcome the force of the retarding field. The grid voltage can be made sufficiently negative that no electron has this much energy. The value of negative grid potential required to cut off the plate current altogether is called the *cut-off grid voltage.*

What has happened is this. At any point in the interelectrode space, the net force on an electron is the vector sum of the forces exerted by the fields set up by the plate and the grid respectively. In Fig. 19-32, the field due to the negatively charged grid was sufficient to cancel out the field of the positive plate only in a small region directly between the grid wires and the cathode. The influence of the grid field was negligible in the space between the grid wires. As the grid voltage is made more and more negative, the grid field becomes stronger, and the region in which it dominates is extended over more and more of the cathode surface, narrowing the "escape gap" of the electrons. The fact that *no* field lines, in Fig. 19-33, extend from the plate to the cathode, indicates that the grid field has becomes so strong in the cathode-grid space that it completely cancels out the force of the plate in this region.

Note that in our example, a *negative voltage of only 30 volts on the grid has entirely cancelled the effect of 200 volts on the plate.* This is an important fact, for it is the reason why a triode is able to amplify a varying voltage.

The reason that a small grid voltage can exercise a greater influence on the plate current than a large plate voltage is that the grid wires are much closer to the cathode than is the plate. Hence the grid-cathode field is much stronger, for a given potential difference, than is the plate cathode field.

Positive Grid Potential. – If we reverse the leads to the grid battery E_c in Fig. 19-31, we will place the grid potential above that of the cathode. Suppose this positive grid potential is about 15 volts, while the plate voltage remains at 200 volts as before. Our interelectrode field map will now be like this:

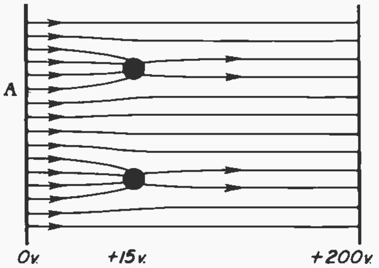

Fig. 19-34

There is no point on the cathode at which an emitted electron would encounter a retarding field. In fact, the larger number of arrows now pointing away from the cathode indicates a stronger propelling field than when the grid voltage was zero. Therefore more electrons will be propelled toward the plate than before, and the plate current will be larger. Not all of the emitted electrons, however, will reach the plate. Note that some of the field lines extend from the cathode to the grid. Some of the electrons will be propelled toward the grid instead of the plate. The electrons that actually reach the grid constitute a *grid current.* Grid current will always flow when the grid is positive with respect to the cathode.

Not all of the electrons that start for the grid, however, will get there. An electron emitted at point *A*, for instance, will experience a *force* toward the grid. But it may have acquired sufficient velocity in a direction toward the plate that it will sail right past the grid wire, and get to the plate. Since the spaces between the grid are much larger than the wires themselves, this is what happens to the majority of the electrons leaving the cathode. Thus, a positive voltage on the grid is able to *increase* the plate current, even though it also causes the grid to steal some of the space charge electrons.

Summary. – We can summarize what we have learned about the action of the grid as follows:

1. With no voltage applied to the grid, the tube behaves just like a diode, the plate current varying with the plate voltage.
2. For any fixed value of plate voltage, a negative voltage on the grid reduces the plate current.
3. If the grid is made sufficiently negative, the plate current is cut off entirely.
4. This cut-off grid voltage is much less than the plate voltage.
5. If the grid is made positive, the plate current is increased. In addition, current flows in the grid circuit.

TRIODE CHARACTERISTICS

19-6. We have seen that a small voltage on the grid of a triode has a greater influence on the plate current than a much larger voltage on the plate. Our study of the field distribution in the tube should have given us a good idea of why this is so. But it doesn't give us any useable or quantitative information about the behavior of a particular tube. For that, we would have to examine the characteristic curves of the particular tube we are interested in. This section will be concerned with the characteristics of a typical triode.

Plate Characteristic Curves. – For any one value of grid voltage, the plate current may be plotted against plate voltage, and a curve similar to Fig. 16-60 or 16-61 (in Lesson 16) obtained. In practice, of course, *both* the grid voltage and the plate voltage vary. There is therefore an infinite number of plate characteristic curves. – one for each possible value of grid voltage. It is customary to plot curves for each of a number of equally spaced grid voltage values, and draw them all on the same set of axes. The result is a *family of plate characteristic curves,* somewhat like Fig. 19-35; on the next page.

Curves similar to this are published for practically all commercial tubes. There is no simple way to calculate them. They are plotted from experimental data. They serve as the basis for all study of the tube's operation.

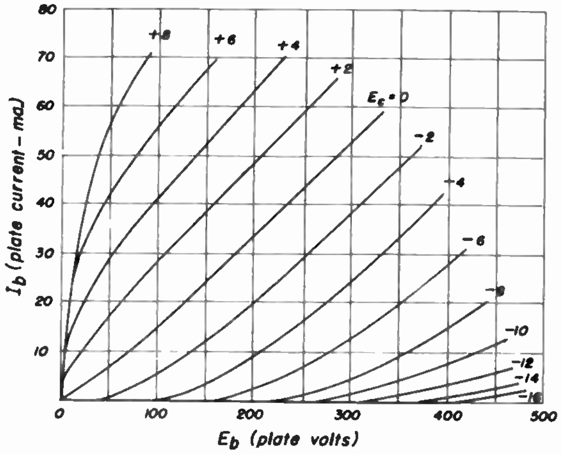

Fig. 19-35

Let's make sure we understand just what these curves mean. Look at the curves marked $E_c = 0$. This shows that when the grid voltage is zero – that is, when the grid is at the same potential as the cathode – the plate current varies from zero, to 60 ma. when the plate voltage is about 330 volts. This assumes, of course, that the grid voltage remains constant at zero while the plate voltage is varied. The next curve to the right, labelled −2, indicates that for a negative grid voltage of 2 volts, the plate current is completely cut off until the plate voltage is at least 40 volts. Further increase of the plate voltage causes the plate current to increase to 50 ma. when the plate voltage is about 360 volts. Similarly, each of the other curves shows exactly how the plate current varies when the plate voltage is varied, but the grid voltage held constant at some positive or negative value.

It should be noted that none of these curves is quite straight. Thus, for *any* value of grid voltage, the tube is a *non-linear resistance,* as explained in Lesson 16. Secondly, for any negative value of grid voltage, there is a minimum, or *cut-off plate voltage,* below which no plate current can flow. Thirdly, no matter how far positive the grid voltage is made, some small plate voltage is needed to cause plate current to flow.

Grid Characteristic Curves. – In practice, we are also interested in knowing how the plate current varies when the *grid* voltage is changed. We can obtain this information from the plate characteristic curves as follows. Consider, for instance, the vertical line marked 200 volts. Each point on this line represents a value of plate current for a value of 200 volts on the plate, and some positive or negative value of grid voltage. Starting at the bottom, the 200 volt vertical line crosses the curve marked −6 at a point representing a plate current of about 2.5 ma., the −4 curve at about 9 ma., and so on, finally crossing the +4 curve at about 64 ma. Each of these intersections tells us what the plate current would be for a particular value of grid voltage, *and* a plate voltage of 200 volts.

If we choose a different value of plate voltage, we would of course find that the vertical line crossed the various curves at a different set of current values. We could tabulate all these values, and then use them to plot curves of plate current against grid voltage for each of several plate voltage values. Such curves, plotted from Fig. 19-35, would be like this:

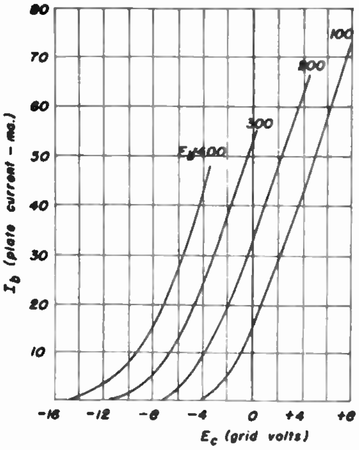

Fig. 19-36

Curves like these are called *static grid characteristics,* because they show how the *plate current* is affected by changes in *grid voltage.* The word "static" refers to the fact that the curves represent conditions when the plate voltage is held constant, or static. For a similar reason, the curves of Fig. 19-35 are called the static plate characteristics.

The letter symbol customarily used for plate current is I_b. E_b is the plate voltage, and E_c the grid voltage. Hence, the plate and grid characteristics are often referred to as I_b-E_b curves, and I_b - E_c curves, respectively. When an alternating voltage is applied to the grid, the instantaneous values of these quantities are designated by small letters, with identifying subscripts – i_b, e_b and e_c.

The grid characteristics of a tube are not usually published, since all the necessary information about the tube is given by the plate characteristics. Also, in practical amplifiers, load resistors must be inserted in the plate circuit to develop a useful output voltage. Then the plate voltage does *not* remain constant as the grid voltage varies. Under these circumstances, neither set of static characteristics would tell us how the plate current would vary. This might seem to complicate matters hopelessly. However, we will develop a simple method by which the static plate characteristics may be used to find the values of *all* voltages in the circuit at any given instant.

Relative Effect of Grid and Plate Voltages. – We have already referred to the fact that the grid voltage exercises a much greater influence on the plate current than does the plate voltage. It is important in practical understanding of tubes to know *how much greater* this influence is. The static plate characteristics will give us this information for any particular tube.

Referring to Fig. 19-35, look along the horizontal line marked 30 ma. Stop where this line intersects the zero grid voltage curve. From this point, drop straight down to the bottom line, and note that the corresponding plate voltage is about 180 volts. This means, of course, that when the grid voltage is zero, it takes 180 volts on the plate to cause a plate current of 30 ma.

Now consider this problem. If the grid is now made 2 volts negative, by how much must the plate voltage be increased to keep the plate current at 30 ma.? To answer this, look back at the 30 ma. line, and stop at its intersection with the –2 curve. This point corresponds to a plate voltage of about 256 volts, thus:

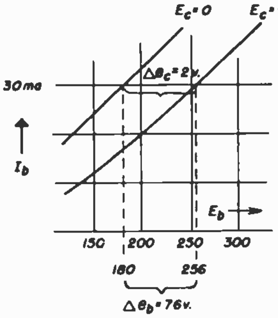

Fig. 19-37

So our answer is that we would have to increase the plate voltage by 256 – 180 = 76 volts. Thus we see that for this particular tube, a change of 2 volts on the grid has as much effect as a 76 volt change on the plate.

Amplification Factor. – The ratio of these two *changes* in voltage has a name. It is the *amplification factor* of the tube, universally represented by the Greek letter μ (mu, pronounced mew, like the sound a cat makes). "Amplification factor" is quite a mouthful to say fast, so you will often hear it referred to as the *mu* of the tube. It is defined, and its numerical value expressed, thus:

$$\mu = \frac{\Delta e_b}{\Delta e_c} \quad (i_b \text{ constant})$$

Δe_b and Δe_c are the *changes* in plate and grid voltage, under the condition that the plate current remains the same. (Remember from Lesson 17 that Δ, delta, means "a change of".) It is also implied that the change in e_c is small.

Notice that μ is not quite the same for all operating conditions. For instance, in the example we used, μ has a value of 76/2 = 38. But if we started at i_b = 10 ma. and e_c = +4, and consider a change to e_c = + 2, the corresponding plate voltage change would be about 20 - 2 = 18, and μ would be 18/2 = 9. However, if we stick to the region near the middle of the characteristic curves, where the curves are most nearly parallel, we would find that μ would come out very close to the value of 40 that we found. For instance, if we start at i_b = 15.5 ma., and e_c = –4, μ would come out about 37.5, very close to 38. For this reason, μ is sometimes referred to as one of the "constants" of the tube.

There are two other "constants" frequently used to summarize the behavior of the tube. These are the *transconductance*, symbolized as g_m, and *plate resistance*, r_p. Both may be obtained from the plate characteristics of a triode.

Transconductance. – Transconductance (also called mutual conductance) is defined as the ratio of a change in *plate current* to a small change in grid voltage, under the condition that the plate voltage remains the same. Thus:

$$g_m = \frac{\Delta i_b}{\Delta e_c} \quad \text{mhos } (e_b \text{ constant})$$

Note that current divided by voltage is the reciprocal of resistance, which is voltage divided by current – volts per ampere. The reciprocal of resistance – amperes per volt – is called *conductance*, and is expressed in *mhos* (ohms, spelled backwards). Thus:

$$\frac{\text{amperes}}{\text{volts}} = \text{mhos}$$

Let's use this definition to find the transconductance of our tube from Fig. 19-35.

We could start at the same place – $i_b = 30$ ma. and $e_c = 0$. For reasons that will develop presently, however, we'll start at the point $i_b = 15.5$, $e_c = -4$, for which the value of μ is 37.5. This time, we must hold the plate voltage constant, so we move up vertically from the starting point to the next higher curve, thus:

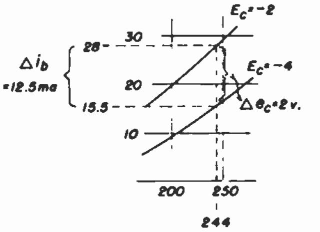

Fig. 19-38

We find that a 2 volt change in grid voltage, while the plate voltage remains constant at 244 volts, causes a 12.5 ma. change in plate current. Then applying the definition:

$$g_m = \frac{\Delta i_b}{\Delta e_c} = \frac{.028 - .0155}{2} = \frac{.0125}{2} = .00625 \text{ mhos}$$
$$= 6250 \, \mu\text{mhos}$$

It is customary to express transconductance in *micromhos* – plate microamperes per grid volt – rather than mhos. As you see, it is a little more convenient not to have to write the decimal point in the final result. Note that to get the right answer, the current must be expressed in *amperes*, not milliamperes. Or, to get the answer directly in micromhos, use microamperes divided by volts.

From the definition of g_m, it is evident that the higher this "constant" is, the more sensitive is the plate current to changes in grid voltage.

Plate Resistance. – The third of the tube constants is similarly defined as the ratio of a small change in *plate voltage*, to the corresponding change in *plate current*, under the condition that the grid voltage is held constant. Thus:

$$r_p = \frac{\Delta e_b}{\Delta i_b} \quad (e_c \text{ constant})$$

Again starting at the same point on the characteristic curves of Fig. 19-35 as we did for g_m, we can find the plate resistance thus:

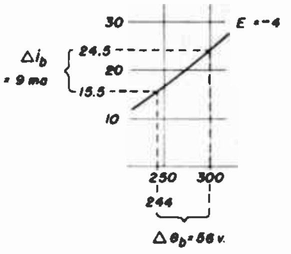

Fig. 19-39

Since e_c is to be held constant this time, our old and new points must both be on the same e_c curve. So for the new point, we move up the $E_c = -4$ curve to its intersection with the next e_b line. At this point, we read the new values of e_b and i_b. This gives us the change of plate voltage necessary to cause the plate current to increase by a known amount. Then:

$$r_p = \frac{\Delta e_b}{\Delta i_b} = \frac{300 - 244}{.0245 - .0155} = \frac{56}{.009} = 6200 \text{ ohms}$$

It should be noted that plate resistance is *not* the same thing as R_b, the d-c plate resistance we defined for a diode. For most triodes, r_p is about the same numerically as R_b *if* the grid voltage is zero, since under this condition, the tube acts merely as a diode. But in practice, triodes are usually operated with a negative average voltage on the grid. In this region, R_b is considerably larger than r_p. For instance, at the point where we computed r_p as 6200 ohms, we would find $R_b = 244/.0155 = 15,750$ ohms.

For any vacuum tube, r_p always means *a-c* plate resistance. This is really the equivalent resistance of the tube to the *alternating component* of the plate current, when an a-c signal is applied to the grid. This is the only quantity that is ordinarily useful in predicting the performance of the tube. R_b is its resistance to the *d-c component* of the plate current, which is not usually of practical interest. These statements will make more sense after you have read the next section of this Lesson.

Relation of Tube Constants. – It can be shown rather simply that the three tube "constants" are numerically related as follows:

$$\mu = g_m r_p$$

If we use our figures to check this relation, we come up with

$$\mu = .00625 \times 6200 = 38.7$$

This value is a trifle more than the 37.5 we found for μ from the curves at this point. Had we been able to read the graph more precisely, and had we also been able to use much smaller changes in e_c and e_b, our answers by the two different methods would check exactly.

Effect of A-c Signal on Grid. – Let's consider the effect of causing the grid voltage to vary above and below some fixed value. Using the method illustrated in Fig. 19-23, we can make use of the grid characteristic of a triode to find how the plate current will vary in response to a varying grid voltage, thus:

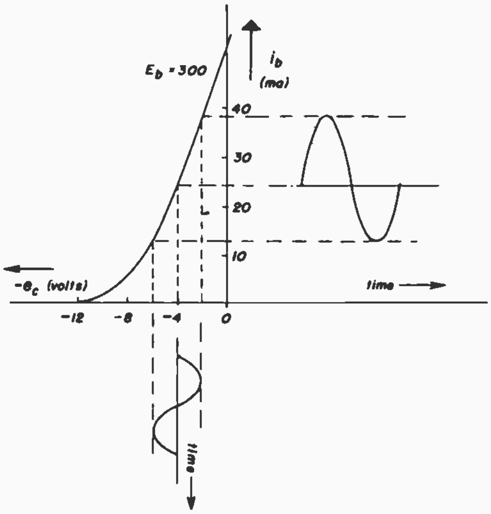

Fig. 19-40

Here we have lifted from Fig. 19-36 the grid characteristic curve for $E_b = 300$ volts. On this curve, we have projected a voltage sine wave with a peak value of 2 volts, superimposed on a steady voltage of -4 volts. In other words, the grid voltage is made to vary between -2 and -6 volts. As shown by the figure, the plate current will vary between 38.5 and 12.5 ma. Thus the plate current consists of a d-c component of about 24 ma., plus an a-c component.

This is the first step in causing the triode to act as an amplifier. But it still isn't an amplifier, for two reasons. First, the output is a varying *current*, and what we want is a varying *voltage*, just as with the diode. Secondly the a-c component of the plate current is not a good reproduction of the grid voltage waveform. Its positive peak value is 14.5 ma., while its negative peak is only 11.5 ma.

You will note that we have chosen a negative average value for the grid voltage, and have kept the amplitude of its a-c component small enough that the grid voltage never goes positive. There are several reasons for this. First, if the grid were to go positive, grid current would flow, and power would be consumed in the grid circuit. Second, as we will see later, a larger grid signal can be used by picking the average value of the grid voltage about half-way between zero and cutoff. And finally, a more faithful reproduction of the grid signal waveform results when the grid is kept negative. We'll expand on these points later.

We can take care of the lack of an output *voltage* very easily, in the same way that we did for the diode – by inserting a *load resistor* in the plate circuit. The complete circuit will now be like this:

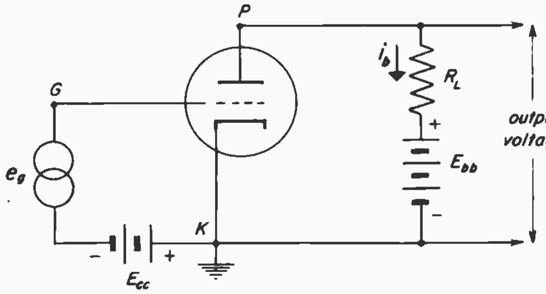

Fig. 19-41

Basic Amplifier Circuit. – This is the *fundamental amplifier circuit.* If you understand this circuit, you will have little difficulty with more complicated amplifiers. Before we consider its operation, let's take note of the meaning of the letter symbols used in Fig. 19-41. E_{bb} is the usual symbol for the *plate supply voltage*, or *B+ supply*. E_c is the d-c, or average, grid voltage. It is called the *grid bias voltage*, and when furnished by a battery as shown, the latter is called the C battery, or bias battery. The symbol e_g is the instantaneous value of the sinusoidal *a-c component of the grid voltage*. This is the signal to be amplified. The instantaneous value of the *plate current* is designated by i_b. Its d-c component is called I_b, and the instantaneous value of its a-c component is i_p. Thus $i_b = I_b + i_p$. The letters *K*, *G* and *P* are used to designate the cathode, grid and plate as points in the circuit, and R_L is obviously the load resistor. Other symbols will be explained as they are required, and a glossary of such symbols is given at the end of this Lesson.

Now for how the amplifier works. The plate current, as we saw from Fig. 19-40, will have both a d-c and a-c component. Since the plate current flows through the load resistor, there will be a voltage drop across the resistor equal to i_bR_L. Since i_b has an a-c component, so does the voltage drop across R_L. *This is the required output voltage.* (As we'll see later, the d-c component of this voltage is easily removed by means of a blocking condenser.) Our next problem is to determine how high this a-c output voltage is. It had better be bigger than the grid signal voltage, e_g, else we have not amplified anything.

Why the Plate Voltage Varies. – Here we run into a complication. As soon as we insert a load resistor, the entire plate supply voltage, E_{bb}, does *not* appear across the tube. Hence we see why we must distinguish between E_{bb} and E_b. Some of it is taken up as the d-c drop across R_L. Furthermore, since the drop across R_L varies, so must the plate voltage across the tube. This being so, Fig. 19-40 does not truly represent the the plate current variations, since it assumes that the plate voltage – e_b, the instantaneous drop from *P* to *K* – remains constant at 300 volts. What to do?

Look at it this way. We have already seen that the tube is a non-linear resistance. The d-c plate resistance of the tube is in series with the load resistor R_L and the plate supply battery E_{bb}, thus:

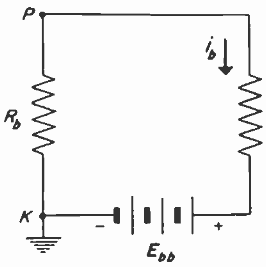

Fig. 19-42

Now if the d-c plate resistance R_b were linear and constant, this would be an easy circuit to solve by the methods explained in Lesson 16. But R_b is not only non-linear, but it varies as the grid voltage varies. So we'll have to develop a new method to find out what the plate current will be at any instant.

However R_b changes, we know that *at any instant* the sum of the voltage drops must equal the applied voltage, E_{bb}. Thus:

$$i_bR_b + i_bR_L = E_{bb}$$

Now i_bR_b is the plate voltage across the tube, e_b, and i_bR_L is the drop across the load resistor, which we will call e_{RL}. Let's forget for the moment that R_b varies, and recall that for any one value of grid voltage, we have its characteristic curve. Thus, for $E_c = -4$, the characteristic curve of R_b is the -4 curve from Fig. 19-35:

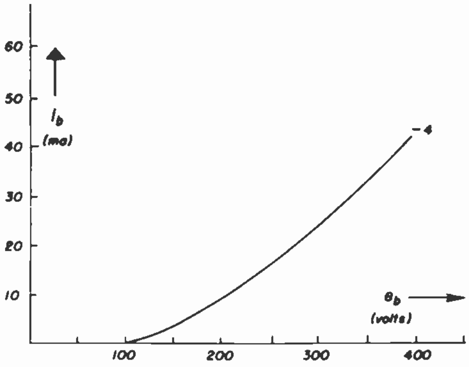

Fig. 19-43

Also, if we pick a value for a load resistor, we can draw its characteristic to the same scale. Let's choose R_L = 10,000 ohms. If we apply, say, 100 volts across 10,000 ohms, the current will be 10 ma. So we can draw the characteristic of R_L like this:

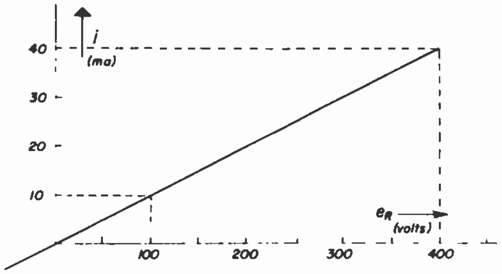

Fig. 19-44

We know that R_L is a constant resistance, so its characteristic is a straight line going through the 0-0 point where the current and voltage axes meet. We can get the right slope to the characteristic by measuring 100 volts horizontally, and 10 ma. up – or 400 volts and 40 ma. This gives us a second point, which is all we need to determine a straight line.

How can we use these two characteristics to determine the plate current? Recall that since R_b and R_L are in *series, the same current must flow in both.* Also recall that the voltage drops across the tube and the resistor must add up to E_{bb} at every instant. When e_b goes up, e_{RL} must come down. Maybe this suggests reversing one of the two characteristics, and superimposing the two. We'll do this in a moment. First, let's decide to make $E_{bb} = 400$ volts; only a part of this will appear across the tube, remember. Now we'll redraw the R_L characteristic, reversed so it slopes up to the left from $E_{bb} = 400$ volts, thus:

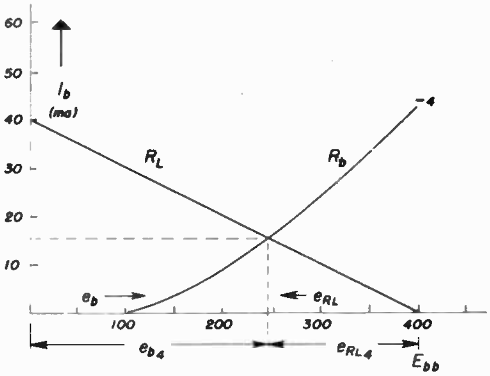

Fig. 19-45

Now consider these facts carefully. The voltage across the tube is measured toward the right, from the lower left corner. The voltage across the resistor is measured *toward the left*, from the point where its current is zero – that is, from the point on the voltage axis corresponding to $E_{bb} = 400$ volts. Looking at it another way, consider any point on the voltage axis, such as the one marked 300 volts. The distance to the zero point at the left is the voltage across the tube, e_b, and the distance to the 400 volt mark, at the right, is the drop across the resistor. *These two distances* add up to 400 volts, as they must when the tube and load resistor are in series across the 400 volt supply.

Next, remember that every point on the R_L curve represents the current through R_L for some value of e_R, and every point on the R_b curve represents the current through the tube for some value of e_b. But *these two currents must be the same,* since R_b and R_L are in series. The only point on *both* curves is the point of their intersection. This, then, indicates the plate current for the condition chosen. It shows that when E_{bb} is 400 volts, and e_c is -4 volts, the plate current is 15.8 ma. Dropping down from this point to the voltage axis, we see that the voltage across the tube, e_b, is 244 volts, and the voltage across the load resistor, e_R, is $400 - 244 = 156$ volts. We have now found a set of current and voltage values that satisfies all the required conditions: (1) the current is the same in both tube and load; (2) the current is in accordance with the characteristic curves of both tube and load; (3) the sum of the voltage drops is equal to the applied voltage. Thus, by graphic methods, *we have solved a non-linear circuit* that was insoluble before.

Load Line. – The solution worked out in Fig. 19-45, of course, holds *only* when the grid voltage is -4 volts. But we could get similar solutions for any other value of grid voltage. In fact, we can get solutions for all possible values of grid voltage simultaneously, by drawing the R_L characteristic on the complete set of plate characteristics of the tube, thus:

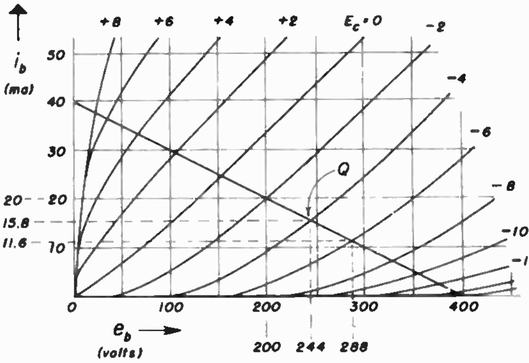

Fig. 19-46

So drawn on the plate curves, the linear characteristic of R_L is called a *load line*. In a moment we'll see how to use it. But first, let's consider an easy way to plot it.

In order to plot a load line, we must first decide on two things – the values of E_{bb} and R_L that we want to use. We have chosen 400 volts and 10,000 ohms. One end of the load line is at $i_b = 0$, $e_b = E_{bb}$, so we make a mark on the curves at this point. To find the other end of the load line, we find the current that would flow in R_L *if* the entire E_{bb} were applied across it, thus:

$$I = \frac{E_{bb}}{R_L} = \frac{400}{10{,}000} = 0.040 \text{ amp} = 40 \text{ ma.}$$

Now we make a mark on the vertical axis, at a point corresponding to the current value we just found. We can now draw a straight line connecting our two marks, and we have our load line.

Now let's return to Fig. 19-46, and see how we can use the load line to find out just how the plate current will vary in response to the sinusoidal signal voltage we considered earlier.

When the instantaneous value of e_g (the signal voltage applied to the grid) is zero, the grid voltage is equal to the bias voltage, E_c, or -4 volts. We've already found what the plate current and the voltages across the tube and load, will be at this instant. We have marked the point representing these conditions as *Q* on Fig. 19-46. This is called the *quiescent point*, or *operating point*, or *Q point*. The values of i_b and e_b at this point are called the *quiescent values*, and are designated as I_{b0} and E_{b0} respectively.

When e_g reaches its positive peak value of 2 volts, the grid voltage is $-4 + 2 = -2$ volts. The instantaneous values of i_b, e_b and e_R at this instant are read from the intersection of the -2 curve with the load line, just as though the other curves were omitted. This is because the -2 curve is the characteristic of the tube at this instant. Similarly, when e_g reaches its negative peak value of -2 volts, the grid voltage is $-4 -2 = -6$ volts, and we get the current and voltage values for this instant from the point where the load line crosses the -6 curve.

The net results are easily read from Fig. 19-46 as follows: When e_g swings from +2 to -2 volts, e_c (the instantaneous voltage from cathode to grid) swings from -2 to -6 volts; i_b varies from 20 to 11.6 ma.; e_b varies from 200 to 288 volts; and e_{RL}, the drop across R_L, varies from 200 to 112 volts. Note that a peak-to-peak swing of 4 volts in the grid signal has been amplified to a peak-to-peak swing of 88 volts in the output voltage across R_L! (The output voltage is the a-c component of E_{RL}.) Furthermore, note that the positive and negative amplitudes of both i_b e_{RL} are equally spaced about the Q point. The distortion that showed up in Fig. 19-40 has been eliminated — at least, as far as we can tell within the limits of precision with which we can read a graph.

The ratio of the output peak-to-peak voltage to the grid signal peak-to-peak voltage has a name — it is the *gain* of the amplifier. In our case, its value is $88/4 = 22$. This is quite a bit less than the amplification factor of the tube, which you may recall was 37.5. We'll learn in the next section that the gain of an amplifier can never be greater than the μ of the tube, and is frequently much less.

Dynamic Transfer Characteristic. — We have already shown how we can plot the static grid characteristic of a tube from its plate characteristic curves. We can do the same thing for the dynamic conditions that exist when a load resistor is inserted in the plate circuit. But instead of reading the current values from the points where the curves intersect a vertical plate voltage line, we read them from the intersections of the curves for various values of grid voltage, with the load line. Remember that since the plate current now flows through the load resistor as well as the tube, *any set of possible operating values of current and voltages is represented by some point on the load line*. The result of plotting current values along the load line against grid voltage is a curve called the *dynamic transfer characteristic* of the circuit. The word "dynamic" refers to the fact that the changing value of the plate voltage has been taken into account. There is a *different dynamic characteristic for every value of load resistance*. For the 10,000 ohm load we used, the dynamic transfer characteristic (drawn for comparison on the static grid curves) will look like this:

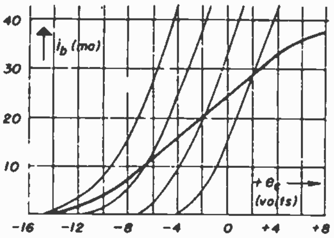

Fig. 19-47

Now here is an interesting fact, to which we'll refer later. Over a limited range, in the negative grid region, the dynamic transfer characteristic is *nearly straight*. If the grid voltage swing can be restricted to this range, then the output waveform will be a faithful reproduction of the input grid signal. If, on the other hand, the grid swings into the curved part of the characteristic, at either or both ends, distortion results. In fact, distortion *always* results when a signal, even a pure sine wave, is applied to any device having a non-linear characteristic over the range of operation.

Phase Relations. — A single-tube amplifier such as we have been studying is said to *invert the phase* of the input signal. The reason for this statement is apparent from the graphs shown in Fig. 19-48.

The first graph shows how the potential of the grid (point G in Fig. 19-41) with respect to the cathode varies when a sinusoidal signal voltage is applied in series with the bias voltage, E_c. On

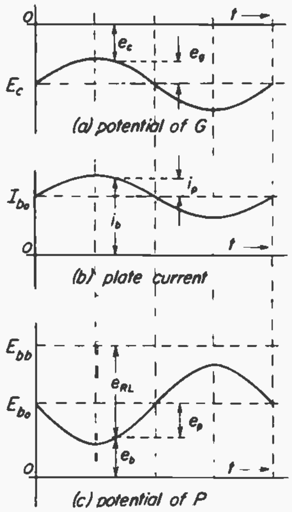

(a) potential of G

(b) plate current

(c) potential of P

Fig. 19-48

the positive half-cycle of the signal, the grid potential *rises to a less negative value.* As the grid becomes less negative, the *plate current increases.* The second graph above shows how the plate current changes in accordance with the grid potential variations. (These three graphs should help to clear up the distinction between i_p and i_b, e_g and e_c, etc. These quantities have been indicated on the graphs for one particular instant.)

Now consider the potential of the plate, *P*, with respect to the cathode. *If* no plate current were flowing, the plate would be above the cathode by an amount equal to E_{bb}. But as soon as plate current flows, there is a voltage drop across R_L. At any instant, the potential of *P* is $E_{bb} - i_b R_L$. The greater the current, the greater is the drop across R_L, and the less of the supply voltage remains across the tube. Thus the *potential of the plate falls* as the plate current increases.

The net result, as shown in graph (c) is that as the grid potential rises, the plate potential falls, and vice versa. Thus the a-c components of these two voltages are 180° out of phase.

The output voltage *is* the voltage from plate to ground, across R_L and E_{bb}. Thus the output voltage is 180° out of phase with the input signal.

Summary. – We can summarize the basic facts of triode operation as follows:

1. The behavior of any particular tube is shown by its static plate characteristic curves, which are graphs of plate current against plate voltage, for several different values of grid voltage.
2. For any value of plate voltage, values of plate current may be read from the curves, and plotted against grid voltage, to obtain the static grid characteristics.
3. The amplification factor, μ, is the ratio of a small change of plate voltage to the change of grid voltage required to keep the plate current the same.
4. The transconductance, g_m, is the ratio of a small change of plate current to the grid voltage change required to cause it, while the plate voltage is held constant.
5. The a-c plate resistance, r_p, is the ratio of a small change of plate voltage to the change of plate current it causes, while the grid voltage remains constant.
6. The three "tube constants" may be found from each other by the relation: $\mu = g_m r_p$.
7. When a load resistor is inserted in the plate circuit, and an a-c signal applied to the grid, the tube acts as an amplifier.
8. Under these conditions, neither the grid voltage nor the plate voltage is constant.
9. The limits of variation of plate voltage, plate current and output voltage across the load resistor, may all be found from the plate characteristic curves by drawing on them the load line for the particular values of load resistance and plate supply voltage chosen.
10. The load resistor serves two purposes – it provides an alternating output voltage, and reduces the distortion generated by the non-linearity of the tube.
11. The gain of an amplifier is defined as the ratio of the a-c ouput voltage (across the load resistor) to the input (grid signal) voltage. When gain is computed from the plate curves and load line, peak-to-peak values are used for both input and output.
12. A dynamic transfer characteristic is a graph of instantaneous plate current against grid voltage, for a particular pair of values of R_L and E_{bb}.
13. The output voltage of an amplifier is 180° out of phase with the grid signal.

TRIODE AMPLIFIERS

19-7. All amplifiers operate according to the basic principles explained in the previous section. They may differ, however, in the following respects:

1. Characteristics of the tube used.
2. Kind and size of load.
3. Methods used to obtain bias voltage.
4. Methods used to couple the amplifier to the input and output circuit.
5. Class of operation.
6. Amount of distortion.
7. Frequency response.

It is the purpose of this section to explain these terms, and to give you a basis for understanding the behavior of practical amplifiers.

Gain of an Amplifier. – We have already shown how the *gain* of an amplifier is defined, and how it may be found from the tube characteristics. It is not necessary to go through all that work, however, to find the gain of a particular amplifier, provided we know three things: the μ of the tube, the plate resistance of the tube, and the size of the load resistance.

We have shown that the plate current contains both a-c and d-c components. In Lesson 17, we showed that a circuit having this kind of current could be analyzed by breaking it up into two partial equivalent circuits – one for the d-c, and one for the a-c. Let's apply this to the *plate circuit* of our triode amplifier. The d-c equivalent circuit is the one shown in Fig. 19-42, consisting of the B supply voltage applied across the series combination of R_L and R_b, the *d-c* plate resistance, the latter being computed from the characteristic at the Q point.

Our only interest now, however, is in the a-c equivalent circuit. We know that the a-c component of the plate circuit flows in both R_L and the a-c plate resistance of the tube, r_p. Our equivalent circuit must, of course, contain an a-c generator. What should its voltage be?

The definition of μ, the amplification factor of the tube, shows that if the grid voltage changes by E_g volts, it takes μ times this much voltage change in the plate circuit to have the same effect on the plate current. The a-c component of the plate current is caused by a changing grid voltage. So our equivalent plate circuit generator should have a voltage μ times the grid signal. The total grid voltage change is its peak-to-peak swing. But, since, for sine waves, rms values are proportional to peak-to-peak values, the rms value of the equivalent a-c plate voltage would be μ times the rms value of the grid signal, or μE_g. So now we can draw our equivalent a-c circuit thus:

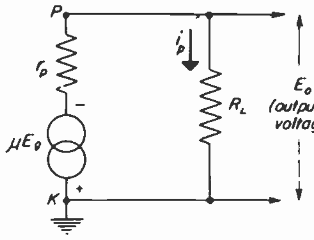

Fig. 19-49

All we have to do now is to solve a simple series resistive circuit. Doing it by the methods studied in Lesson 16 and 17, we have no trouble finding that

$$\text{gain} = \frac{E_o}{E_g} = \mu \frac{R_L}{r_p + R_L}$$

Let's use this relation to check our graphical results for the example we worked out. Inserting in the formula the values of μ and r_p that we found earlier at the Q point, we get:

$$\begin{aligned}\text{gain} = \mu \frac{R_L}{r_p + R_L} &= 37.5 \times \frac{10{,}000}{6{,}200 + 10{,}000}\\ &= 37.5 \times .618\\ &= 23.1\end{aligned}$$

This is a little more than we got before. The reason is partly the inaccuracies inherent in reading values from curves, and partly the fact that the formula is exact only if the amplifier is perfectly free from distortion. But the results are plenty close enough to justify use of the formula.

This formula deserves a little study. Note that since $r_p + R_L$ must always be greater than R_L alone, the value of the fraction must always be less than 1. Therefore, the gain of the amplifier can never be greater than μ. There is, however, something we can do to make the gain as close to μ as possible. The plate resistance, r_p, is fixed by the tube. But we can make R_L bigger and the nearer the value of the fraction approaches 1, the closer the gain is to μ.

There are practical considerations, however, that sometimes make it undesirable to make R_L too large. If you look back at the d-c equivalent circuit, Fig. 19-42, you will note that the bigger R_L is, the less plate voltage will appear across the tube, or the smaller the quiescent plate current will be. If the quiescent plate current is too small, the load line (see Fig. 19-46) is pulled way down to where it cuts across the most non-linear portion of the plate characteristics. This means that excessive distortion will result. An alternative would be to increase the plate supply voltage, E_{bb}, but this is not always practical, either.

Cathode Bias. – The purpose of the bias voltage in an amplifier is to set the operating point at the best possible point on the tube characteristic. Look, for instance, at the dynamic transfer characteristic shown in Fig. 19-47. It was shown that in order to avoid excessive distortion, the grid voltage swing should be confined to the linear part of this curve. Now the grid signal swings the grid voltage by equal amounts above and below the bias voltage. Therefore, in order to accommodate the greatest possible grid voltage swing without distortion, the bias voltage is so chosen that it falls at about the midpoint of the straight part of the transfer characteristic. A further limitation is that usually the grid must not be permitted to swing positive.

To meet these various conditions, it is necessary that the bias voltage be fixed fairly accurately at a constant value. The use of a bias battery, as shown in Fig. 19-41, is not very practical in a TV receiver. Instead, some form of *self-bias* is used. The most common method for amplifier circuits is *cathode bias.*

The requirement is simply that the grid be placed at a potential that is a fixed amount below the cathode. We learned in Lesson 16 that the potential difference between any two points in a circuit can be fixed if the two points can be connected by a resistor through which a fixed d-c current flows. We can apply this idea to the vacuum tube thus:

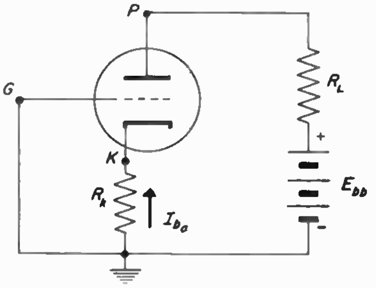

Fig. 19-50

With no signal on the grid, the quiescent plate current I_{b0} flows in the plate circuit, which now includes the *cathode resistor* R_K in series with R_L and r_p. This causes a voltage drop between *K* and ground equal to $I_{b0}R_K$, placing the grid (shown here as connected directly to ground) below the cathode potential. The required value of R_K is usually small. For instance, in our example, I_{b0} was 15.8 ma., and E_c was -4 volts. The required value of R_K is:

$$R_K = \frac{E_c}{I_{b0}} = \frac{4}{.0158} = 253 \text{ ohms}$$

This is so much less than either R_L or r_p that the cathode resistor itself has negligible effect on the plate current.

There are two defects in the simple biasing arrangement shown above. One is that there is no way to apply a grid signal between *G* and ground, since these two points are shorted out by the grid lead. The other is that any a-c component of the plate current would cause the grid potential to vary in accordance with this a-c component. What we want from the biasing resistor is a *steady* d-c potential difference between grid and cathode, not a varying one. These two difficulties are easily overcome like this:

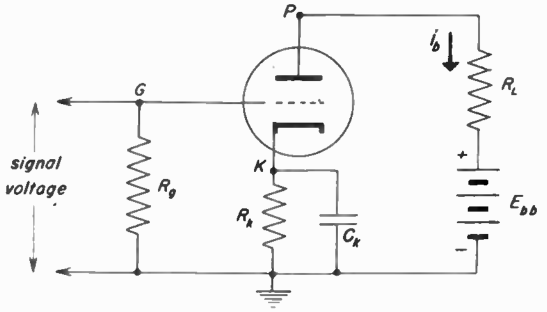

Fig. 19-51

So long as no direct current flows in R_g, point *G* will be at ground potential. But an a-c signal can be applied across R_g, causing the potential of *G* to vary above and below ground. R_g is usually a much higher resistance than R_L – say a megohm or so. The second difficulty is overcome by the addition of the bias condenser, C_K. Its value is made large enough that its reactance is negligibly small at the lowest frequency to be amplified. Thus the cathode is at a-c ground potential, but above ground for d-c. Thus the d-c potential of the grid is below that of the cathode, but there is no a-c voltage between grid and cathode, except that set up by the input signal itself.

Grid Leak Bias. – Another method of self-bias of a triode is *grid bias,* also called *grid leak bias.* It is so called because the bias voltage is developed across the grid resistor, R_g, when the signal is permitted to drive the grid positive. Since amplifiers – at least, the audio and video amplifiers in a TV set – are not usually operated so that grid current flows, the method of grid bias is more often encountered in other triode application. It is used, for instance, in the FM limiter of the sound section, in the blocking oscillator in the deflection section, and in the local oscillator in the r-f section.

A typical grid biased triode circuit is like this:

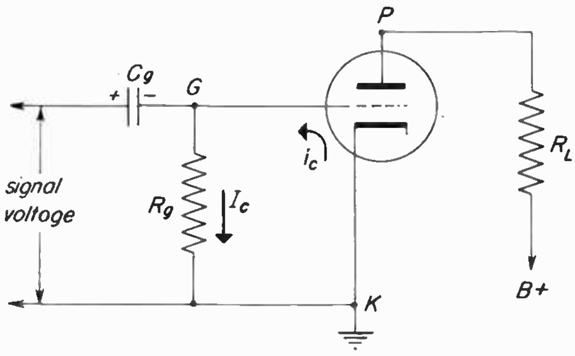

Fig. 19-52

Note that no cathode resistor is used. (We have here switched to indicating the plate supply voltage as simply a lead to some voltage source, whose other terminal is assumed to be connected to ground. This is a usual practice in diagrams of sections of a more complex circuit.)

The reactance of the grid condenser C_g is small at the frequency of the signal voltage. The a-c voltage across R_g, therefore, is substantially the applied signal. On each positive half-cycle of the signal, the grid is driven positive, and grid current flows in a series of pulses. *The grid circuit behaves exactly like a diode rectifier.* On each positive half-cycle of the grid voltage, electrons flow from the grid to the condenser, charging it in the polarity shown. As the signal voltage falls, the electrons flow out of the condenser, and through R_g to the cathode. The current through R_g therefore continues during the negative half-cycle of the signal, thus:

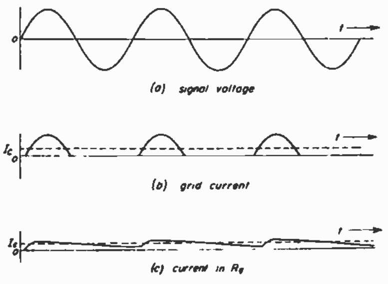

Fig. 19-53

The pulsating d-c grid current, i_c, has an average value I_c. This is also the average value of the current in R_g. The latter, however, is nearly a steady d-c, due to the charging and discharging of the condenser C_g. The direct current through R_g produces a voltage drop from K to G, which is equal to I_cR_g, which is the *bias voltage developed by the circuit.*

The magnitude of I_c, and of its small a-c component, depend on the relative values of R_g and the d-c equivalent resistance of the grid circuit (what we would call R_b, if we consider the grid circuit as a diode). But note that the magnitude of I_c, and therefore of the *bias voltage, also depends on the amplitude of the grid signal.* In an amplifier, this would usually be undesirable, as the operating point would shift as the amplitude of the signal fluctuated. In certain other applications, such as in oscillators, this is exactly what is wanted. This will be further discussed in the following section.

Coupling Methods. – It frequently happens that a signal must be amplified more than is possible with a single amplifier tube, or *stage*. In such cases, it is necessary to use two or more stages, the output voltage of one stage being used as the input signal of the following stage. There are several methods in use by which several stages may be coupled, as follows: (1) direct coupling, (2) resistance-capacitance coupling, (3) impedance coupling, and (4) transformer coupling. Also, any of these methods may be used for applying the signal to the first stage, or applying the output voltage to a loudspeaker, kinescope or other device.

Direct Coupling. – In direct coupling, the grid of the second stage is connected directly to the plate of the first, as in Fig. 19-54.

This has the advantage of a much broader *frequency response*, as we shall explain later. It has the disadvantage, however, of requiring a plate voltage supply approximately twice as large as for one stage. For instance, suppose E_{bb_1} is 400 volts, and the d-c drop in R_{L_1} is 100 volts. This places the plate of the first stage, P_1, at 300 volts above ground. But the grid of the second stage, G_2 is at this same potential. If the bias voltage of the second stage is, say, 20 volts, K_2 must be 320 volts above ground. P_2 must now be 300 volts above this or 620 volts above ground. Assuming another 100 volts d-c drop in R_{L_2}, the plate supply available for the second stage must therefore be 720 volts.

Resistance-Capacitance Coupling. – To avoid the need for such high source voltages, a blocking condenser is inserted between P_1 and G_2, as shown in Fig. 19-55.

Now it is evident that G_2 has been isolated from P_1 and G_2 need not be at the same d-c potential as P_1. Hence, both cathode resistors can have their low ends connected to ground, and a 400 volt supply will provide the required plate voltages for both stages.

The a-c component of the voltage across R_{L_1} is the output voltage of the first stage, e_{o1}. This same voltage appears across the series combination of C_c and R_{g2}. The reactance of the *coupling condenser*, C_c, is low enough at the lowest frequency to be amplified that substantially all of e_{o1} appears between G_2 and ground, across R_{g2}. It is thus the input signal for the second stage, where it is amplified again.

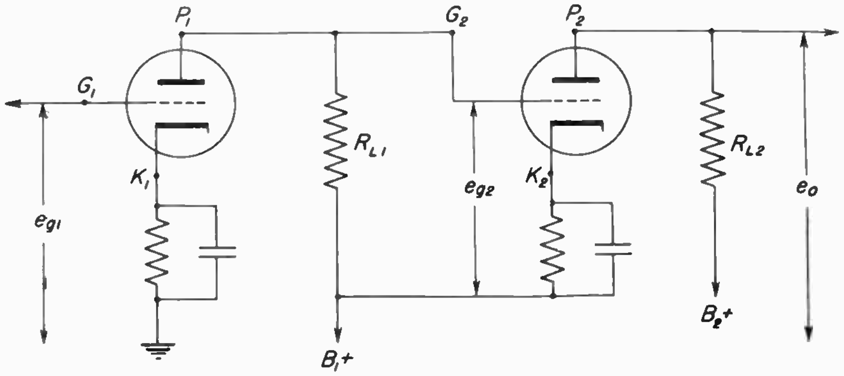

Fig. 19-54

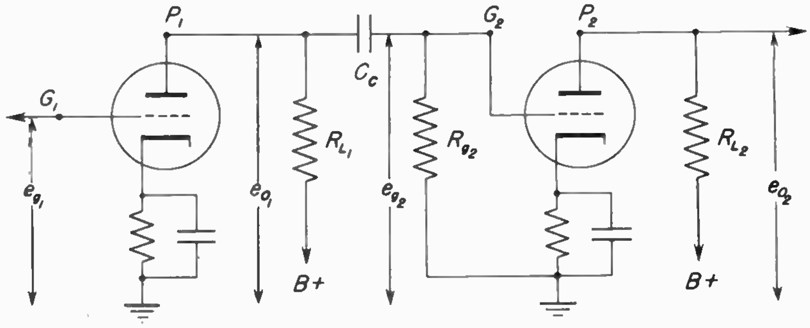

Fig. 19-55

Overall Gain. – It is easy to show that the overall gain of two or more stages of amplification is the product of the gains of the separate stages. Thus, if each of the stages in Fig. 19-55 has a gain of 20, the overall gain is 400, thus:

$$\text{overall gain} = \frac{E_{o2}}{E_{g1}} = \frac{E_{o2}}{E_{g2}} \times \frac{E_{g2}}{E_{g1}} = \frac{E_{o2}}{E_{g2}} \times \frac{E_{o1}}{E_{g1}}$$

$$= 20 \times 20 = 400$$

Impedance Coupling. – If the load resistor of the first stage, R_{L_1}, is replaced by an inductance, or some impedance other than a pure resistance, then the stages are said to be *impedance coupled.* It will be seen in lesson 33 that the peaking coils and other components of the high frequency compensation networks of video amplifiers can be considered as such coupling impedances .

Transformer Coupling. – Another method by which the grid of a following stage may be isolated from the d-c supply voltage on the preceding plate is by the use of a coupling transformer, as shown in Fig. 19-56.

This circuit eliminates the need for R_{L1}, C_c and R_{g2}. The a-c component of the plate current of the first stage flows in the transformer primary, L_1, and induces a voltage in L_2. This is the signal voltage applied to the second stage.

Transformer coupling has two advantages over RC (resistance-capacitance) coupling. First, the resistance of the transformer primary is usually quite low, and the d-c voltage drop in it is neg-

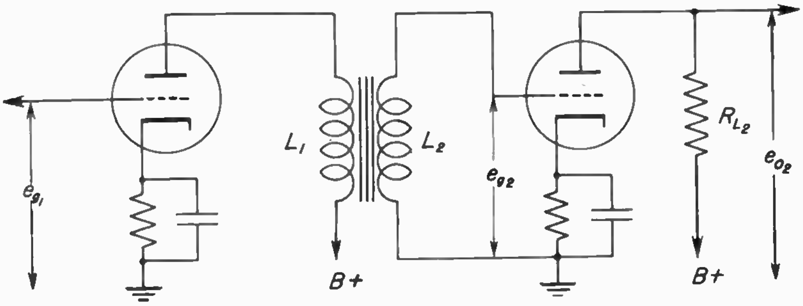

Fig. 19-56

ligible. Thus, substantially all of the plate supply voltage is applied to the tube, and practically none used up in a load resistor. Secondly, it is possible by choosing the turns ratio of the coupling transformer to make the secondary induced voltage larger or smaller than the primary voltage as desired, and thereby secure a better impedance *match* between stages. This matter of impedance matching will be discussed in Lesson 20, and when we take up the sound section of the TV receiver. It is here that transformer coupling finds its principal application.

Frequency Response of Amplifiers. – It would be very nice if an amplifier would work equally well for input signals of all frequencies, from zero right up to hundreds of megacycles, amplifying all frequencies in just the same ratio. Unfortunately, things don't work that way. Actual amplifiers are effective only between more or less definite frequency limits. The effective *bandwidth* of an amplifier, like that of a tuned circuit, is taken as the difference between frequencies at which the output voltage drops to 0.707 times the maximum.

Resistance-capacitance coupling is the most frequently encountered method, so we will consider its effect on the *frequency response* of the amplifier. If we plot the output voltage against frequency, for a constant input amplitude at each frequency, we find we get a curve something like this:

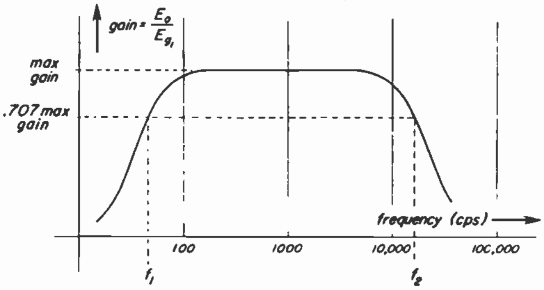

Fig. 19-57

This curve, by a simple change of scale, is also the graph of *gain* against frequency. We find that the gain is substantially constant, or *flat*, over a certain range, and then falls off rapidly at lower and higher frequencies.

Recall that the signal, in Fig. 19-55, is applied to the second stage across a series of combination C_c and R_{g2}. But only the voltage across R_{g2} appears between grid and ground of the second tube. At high frequencies, the reactance of C_c is too small to matter. But at low frequencies, X_c becomes equal to or greater than R_g. These two elements of the coupling network then act as a voltage divider, only a part of the signal being applied to the next stage. The lower the frequency, the more the coupling condenser tends to block the signal from the next stage, and the less final output voltage is obtained. Since even the first stage is often supplied through a coupling condenser, all stages contribute to this falling off of overall response.

At high frequencies, the coupling condenser is practically a short circuit. But there is stray capacitance shunted between the grid and ground. This consists partly of the capacitance between the lead wires and the chassis, but mostly of the capacitance between the grid wires and the cathode of the following stage. The higher the frequency becomes, the smaller is the reactance of this shunt capacitance, and the greater is the extent to which the signal is by-passed to ground instead of appearing across R_g. This is why the response falls off at high frequencies.

The frequency range of an amplifier may be extended, within limits, by adjusting the values of the coupling components, and by selecting a tube with a small grid-cathode capacity. But any such extension of its range is accomplished only at the expense of gain.

Direct coupling pushes the low frequency limit of the amplifier right down to zero. For this reason direct coupled amplifiers are often called *d-c amplifiers*. But they are subject to the same upper frequency restrictions as amplifiers that are resistance-capacity coupled or transformer coupled.

The low frequency response of transformer coupled amplifiers also falls off sharply, but for a different reason. Remember that the voltage induced in the transformer secondary is proportional to the rate of change of the primary current. If the primary current is of a low frequency, it is changing less rapidly, and the voltage it induces in the secondary is therefore less.

Distortion. – We have learned earlier that when a varying voltage is applied across a *pure resistance*, the current is directly proportional to the voltage at every instant, and the waveform of the current is identical with that of the voltage. This is true provided the resistance is constant – that is, that its characteristic is linear – over the entire range of the voltage swing.

In this lesson, we have seen several examples of *distortion* of the voltage waveform. A diode rectifier produces such a result, as shown in Fig. 19-12, because its characteristic bends sharply at the voltage axis. A triode having a curved grid characteristic, such as that shown in Fig. 19-40, also produces distortion.

We can generalize from these examples and state that *whenever a voltage is applied to a device having a non-linear characteristic, distortion results* – that is, the output (current) waveform will not be the same as the input (voltage) waveform.

Harmonic Generation. – In Lesson 17, we learned that any waveshape may be regarded as made up of a number of *harmonic components*, each a sine wave, and each having a frequency that is an exact multiple of the fundamental frequency of the wave. Also, we have just seen that if a pure sine wave is applied to a non-linear device, such as a vacuum tube with a curved transfer characteristic, the output waveform is *not* a sine wave. It follows from these two facts that the frequencies that were not present in the input have been introduced into the output by distortion. The tube, in other words, has generated new frequencies, each an exact multiple of the input sine wave frequency.

In an amplifier, these new frequencies are undesired, so it is important that components be so chosen and adjusted that the range of operation falls on a straight, or nearly straight, part of the characteristic. If the tube is so operated that there is a large amount of harmonic distortion in the output, some special means must be used to remove from the output the undesired frequencies generated by the tube.

The generation of new frequencies by a tube with a non-linear characteristic is sometimes desirable. For instance, the intermediate frequency (i-f) in a TV receiver is such a distortion product, and could be generated only by a non-linear device such as a vacuum tube. In such an application, the tube is fulfilling the last of the three major functions of a vacuum tube listed in Sec. 19-1.

Classes of Amplifier Operation. – In the amplifier we have been studying so far, the plate current was never completely cut off, and the grid was never permitted to swing positive. This manner of operating the tube is known as *Class* A_1 *operation.* If grid current is permitted on the positive peaks of the signal, but plate current flows throughout the entire cycle, the operation is Class A_2.

It is possible, by changing the bias voltage, to cause the plate current to be cut off completely during part of the cycle, thus:

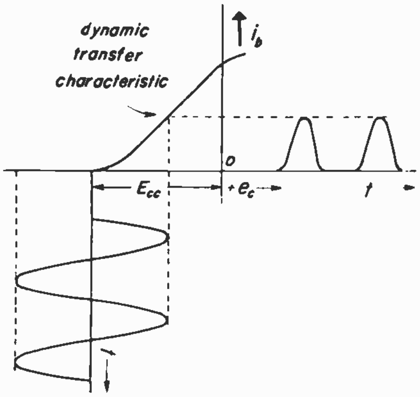

Fig. 19-58

Here the tube is *biased to cut-off.* The signal swings the grid above and below the bias voltage. When the bias voltage is set to coincide with the cut-off voltage, the plate current flows only during half of each cycle. This is *Class B operation.* If the bias voltage is made greater than cut-off, the plate current flows for less than half of each cycle, and the operation is *Class C.* When the current flows for more than half of each cycle, but less than the full cycle, the operation is *Class AB.* The numeral "1" following any of these designations indicates that no grid current flows at any time. The numeral "2" indicates that grid current does flow part of the time.

It is clear from our previous discussion that any amplifier operating Class AB, B or C will contain appreciable distortion in its output.

Push-Pull Amplifier. – Audio and video amplifiers nearly always are operated as Class A. An exception is a *push-pull* audio amplifier. Two tubes are used, each operating Class B or Class AB, in the circuit shown in Fig. 19-59.

The signal is applied to the two grids through a center-tapped transformer T_1, in a manner similar to the full-wave rectifier shown in Fig. 19-17. When the grid of V_1 goes more positive (or less negative), its plate current increases. At the same time, the V_2 grid becomes more negative, and the tube is cut off. On the second half-cycle, the process is reversed, the V_2 current increasing while V_1 cuts off. But the current pulses of both tubes flow in the primary coil of the output trans-

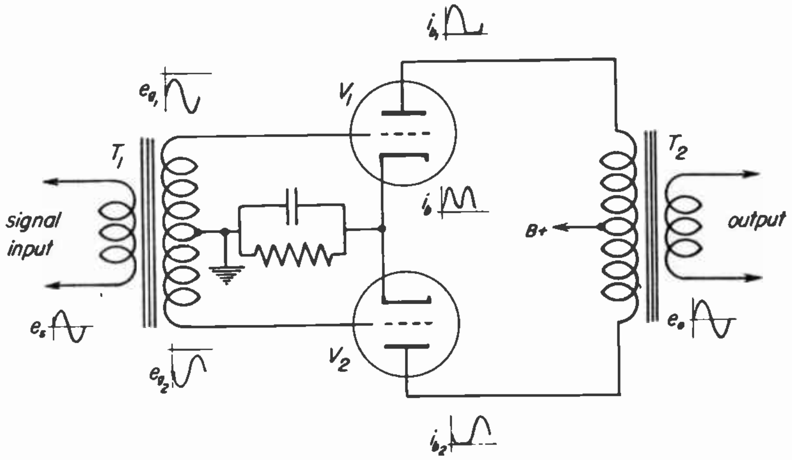

Fig. 19-59

former, T_2, so that the voltage induced in the T_2 secondary is substantially a sine wave.

This circuit has two main advantages. First, it gives more than double the output power obtainable from one tube. Second, its output contains very little distortion. This is because the second and all even harmonics generated in the tubes balance each other in the T_2 primary, and flow in the plate supply, thus completely eliminating even harmonic frequencies from the output.

Tuned Loads. – In a properly designed and adjusted Class A amplifier, harmonic generation can usually be kept low enough that it does not noticeably affect the output signal. But if the plate current flows for appreciably less than a full cycle, as in Class B or C operation, some means must be used to remove the harmonic distortion from the output. Second harmonics, as we have stated, can be removed by connecting two tubes in push-pull. But this, of course, won't work for a single tube amplifier.

We have assumed so far that an amplifier is expected to pass as wide a band of signal frequencies as possible. This is not always the case. If the signal frequency is in the r-f range, it is usually desired to pass only a relatively narrow band of frequencies above and below a fixed frequency. For instance, an i-f amplifier in a broadcast radio receiver might be expected to pass a band only 5 kc above and below a signal frequency of 700 kc. How can the amplifier be made to suppress all frequencies outside the desired band? With a tuned circuit, of course. A parallel resonant circuit can be substituted for the load resistor R_L, as in Fig. 19-60.

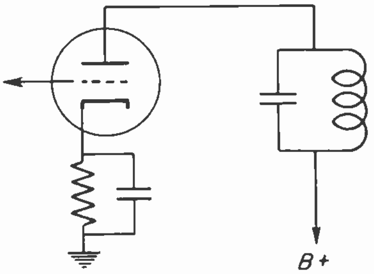

Fig. 19-60

Suppose the signal frequency is 700 kc. If the amplifier operates Class AB, B or C, the plate current will contain a large component of 1400 kc, and somewhat smaller components of 2100, 2800, etc. However, the load is the tank circuit, which is tuned to 700 kc. At this frequency it is a high resistive impedance, so a sizeable amplitude of 700 kc voltage is developed across it. At 1400 kc, however, the tank impedance is only a small fraction of its impedance at 700 kc. Accordingly, only a negligible amount of 1400 kc voltage appears across it. Thus the voltage across the tank is substantially sinusoidal, with a frequency of 700 kc. The second and all higher harmonics are "tuned out" by the tank circuit.

Summary. – The important things to remember about amplifiers are as follows:

1. The gain of a single stage amplifier is given by $\mu R_L / (r_p + R_L)$.
2. The gain of a multistage amplifier is the product of the gains of the individual stages.
3. Bias voltage may be obtained from the tube itself by inserting a resistor in the cathode circuit, or, if grid current flows, in the grid circuit. In either case, a-c must be by-passed around the bias resistor by means of a condenser.
4. Four methods of interstage coupling are available: (a) direct coupling; (b) RC coupling; (c) impedance coupling; and (d) transformer coupling.
5. The gain of any amplifier falls off at high frequencies, and the gain of any except a direct-coupled amplifier falls off at very low frequencies.

6. Whenever the dynamic transfer characteristic is curved or sharply bent within the range of operation, the output waveform is different from the input waveform. This is distortion.
7. Whenever distortion is present, the output contains new frequencies that were not present in the input.
8. Amplifier operation is classed as A, AB, B or C, according to the fraction of the signal cycle during which plate current flows. Most audio and video amplifiers are Class A.
9. Push-pull amplifiers are used because they deliver large output power with a minimum of distortion.
10. Parallel tuned circuits are used in place of a load resistance when it is desired to amplify only a relatively narrow band of frequencies.

OSCILLATORS

19-8. An oscillator has been described as "an amplifier with its tail in its mouth". The reason for this description will become apparent in a moment. The function of any oscillator is to develop a *varying output voltage or current* when supplied only with *steady d-c input voltage.* It must usually sustain these variations without the help of any external signal. Finally, the frequency and waveform of its output are usually required to conform to some fixed standard. Let's see how a triode amplifier can be made to satisfy these requirements.

There are many kinds of oscillator circuits. They differ in the tubes used, the external circuits, and the waveform and frequency of the output. In this section we can present only a very few basic types to illustrate the principles involved. Various specific oscillators used in television receivers will be explained more thoroughly in later Lessons.

Feedback. – All oscillators work because of the amplifying ability of the tube. Suppose we have a simple triode amplifier with a gain of 12. Thus with a 1 volt a-c signal on the grid, we get 12 volts across the load. Ordinarily, we would use the whole 12 volts to operate the next stage. But suppose we could take part of this output signal – say 1 volt – and lead it back to the grid. This voltage would be amplified, just like the external signal. In fact, we could remove the external signal, so that the *only* signal applied to the grid is that taken, or *fed back,* from the output. The amplifier won't know the difference, and will go on amplifying its own output voltage. An illustration of an actual circuit will make this clear. Look at Fig. 19-61.

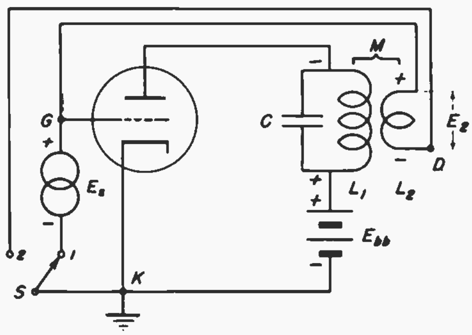

Fig. 19-61

With the switch S in the position shown, we have an amplifier in which the load is a parallel LC circuit tuned to the frequency of the signal voltage, E_s. At this frequency, there will be a sinusoidal current flowing in the inductance L_1. Let us suppose that the mutual inductance between L_1 and L_2 is such that the a-c voltage E_2, induced in L_2, has a value exactly equal to E_s. Therefore the potential of point *D* at every instant will be exactly the same as that of *K*.

Now we suddenly move the switch to position 2, which is at the same potential as *D* and *K*. In doing so, we have substituted the voltage E_2 for E_s. But the tube can't see this, so it amplifies E_2 instead. E_s is now out of the circuit altogether, but an alternating current is still flowing in L_1, at the same frequency as before. Some of its energy is fed back to the grid through the magnetic field linking L_1 and L_2, thus continuing to supply a signal voltage just as before. The amplifier is now an oscillator, generating its own signal continuously.

Actually, it is not necessary to start with E_s at all. If L_2 is connected between cathode and grid as shown, then oscillations will start in the tank circuit as soon as the plate supply is turned on. It is important, however, that the polarity of E_2 be such that it makes the grid more positive when the current in L_1 is *increasing.* This is called *positive feedback.* If the leads from L_2 were reversed, then as soon as the tank current started to increase, the grid would go negative, reducing the plate current and choking off oscillations. Such a connection would constitute *negative feedback.*

The frequency of the oscillator is controlled by the resonant frequency of the tank circuit. The amplitude of the output depends on the gain of the tube and its load, viewed as an amplifier, and on the amount of energy fed back to the grid. The latter depends on the mutual inductance between L_1 and L_2.

Essentials of an Oscillator. – All oscillators work because in some way a part of the output energy is fed back to the grid circuit. Thus the *feedback network* is one of the essentials of an oscillator. The others are (2) a *vacuum tube* to amplify the feedback voltage; (3) a *frequency controlling circuit;* and, of course, (4) a source of d-c power, and (5) a means of extracting the output energy (the part of it that is not fed back to the grid) so as to put it to work.

The feedback network is, of course, the feature that distinguishes an oscillator from an amplifier. It can be almost any form of impedance that is common to the plate and grid circuits, thus:

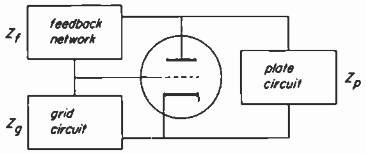

Fig. 19-62

In the example we presented above (which is called a *tuned plate oscillator)* this common impedance was the mutual inductance between the coils, L_1 and L_2. There are many other ways, however, in which the required feedback may be obtained. It can even consist only of the interelectrode capacitance between the plate and grid of the tube.

The requirements of the feedback network are simple. First, it must feed back a *sufficient* fraction of the output. Second, it must apply the feedback voltage to the grid in such *phase* that it tends to *sustain,* not oppose, the oscillations; that is, it must drive the grid more positive when the plate current is increasing. Since the plate and grid in an amplifier are 180° out of phase with each other (as shown in Fig. 19-49), this means that the phase of the feedback voltage must be reversed in the feedback network. It is not necessary that this phase shift be exactly 180°, but it should be nearly so.

The oscillator frequency is often determined by one or more tuned circuits. This is nearly always the case when the output waveform desired is a sine wave. (It is also possible to control the frequency of a sine wave oscillator with certain RC circuits, but these are a little too complicated for treatment here, and are not encountered in TV receivers.) In certain other cases, such as any of several oscillators generating square waves or sawtooth waves of voltage, the frequency is determined by the time constants of RC circuits. These constitute a special class of oscillators known as *relaxation oscillators,* which are not considered in this discussion of feedback oscillators.

The Hartley Oscillator. – A common oscillator circuit is like this:

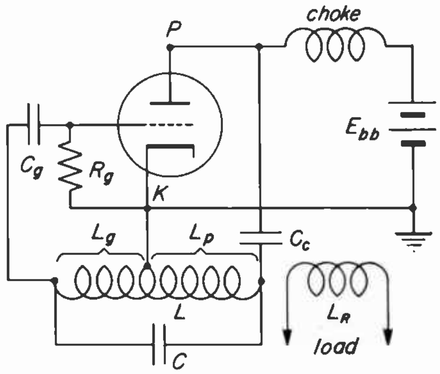

Fig. 19-63

The d-c component of the plate current flows through the choke and plate supply, while the a-c component flows through the coupling condenser C_c and the right-hand part of the coil L (designated as L_p in the figure). This alternating current produces an a-c voltage across L_p, which is applied across the series combination of C and L_g. Thus there is an a-c voltage across the entire inductance L. But since this same voltage appears across C, L and C are a parallel resonant circuit, which determines the frequency of the oscillator.

The voltage across L_g places an a-c voltage on the grid, which is amplified and fed back. R_g and C_g are the grid leak and grid condenser. Connected as shown, they form a grid biasing arrangement. Their function here is to facilitate the starting of oscillations, and to maintain a constant amplitude of output voltage. (The grid condenser also serves as a coupling condenser, through which the feedback voltage is applied to the grid.) You will recall that with grid bias, the grid is made more negative as the signal amplitude is increased. When the oscillator is first turned on, there is no grid voltage, and therefore no bias. The plate current therefore builds up quickly. As soon as this happens, grid current flows, applying a negative bias to the grid, and limiting the amplitude of the a-c plate current component.

To use the oscillator output, another coil L_R is coupled magnetically to L. Any variation in the load current in L_R induces voltages back into L, causing the feedback voltage to change. But if this voltage is reduced, the grid bias circuit permits the grid to become less negative, thus increasing the a-c plate current, and tending to restore the output voltage to its original amplitude.

TETRODES, PENTODES AND OTHER TUBES

19-9. Although all cutting tools work on the same principle, there is a considerable difference between a chisel and a band saw. One works better in one application, one in another. Similarly, all vacuum tubes work on the principles already explained. But refinements have been introduced from time to time over the last thirty years, all designed to improve on the performance of the triode in special applications. This section will discuss very briefly some of these refinements.

The Tetrode. – We have mentioned the capacitance between the cathode and grid of a triode, and shown that at high frequencies it greatly affects the response of an amplifier. There is also capacitance between the grid and plate, which has a similar effect at high frequencies. The grid-plate capacitance has the further annoying trait of providing a high frequency feedback path between plate and grid, thus sometimes causing a triode to oscillate when it isn't supposed to.

The *tetrode* was developed in an effort to overcome the effects of the grid-plate capacitance. A second grid (called the *screen*, or *screen grid*) is inserted between the grid and plate, and kept at a fixed potential, usually slightly less than the plate potential. One of its effects is to act as a screen, reducing the alternating electric field between grid and plate, and thus practically eliminating the capacitive coupling between them. We'll try to explain this presently. Meanwhile, let's examine a map of the interelectrode fields in the tetrode:

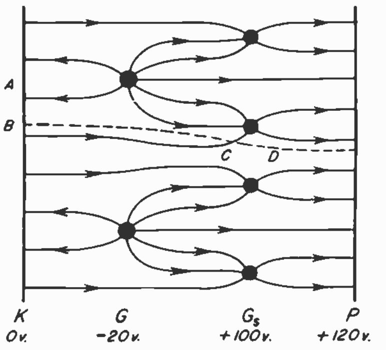

Fig. 19-64

The field due to the plate voltage exists almost entirely between the plate and screen. It will be noted that the influence of the plate voltage does not extend to the cathode, where the plate current electrons originate. Therefore, *variations in plate voltage have almost no effect on the plate current.* (We'll qualify this statement presently for the special condition when the plate voltage is less than the screen voltage.)

Before we go further, let's clear up a point that may bother you. You will note that no field lines are shown extending from the cathode to the plate – they all terminate on the screen. This does *not* mean that all the electrons go to the screen instead of the plate. Remember that the fieldlines represent the direction of the force on an electron, but not necessarily the direction in which it moves. To understand this distinction, consider a baseball thrown in a horizontal direction. As soon as it leaves your hand, it is acted on by only two forces: (1) gravity, which tends to force it down, and (2) air friction, which tends to slow it up, whatever its direction of motion. In spite of these two forces, the ball will travel a long way horizontally, due to the initial velocity given it by your throwing arm, before it slows down appreciably or falls to the ground.

An electron emitted from the cathode at point *A* will encounter a retarding field set up by the negative grid voltage. Since its emission velocity is nearly zero, it is forced back toward the cathode, just as in a triode. An electron emitted at point *B*, however, encounters a field that starts it toward the plate, roughly in a path indicated by the broken line. Acted on by the force of the field, it is accelerated so that by the time it reaches point *C* it is moving at high speed. It is travelling so fast that it goes right past point *C*, in spite of the force at that point tending to swerve it toward the screen wire. This electron could continue on to the plate even if there were no field between the screen and plate, due entirely to its plate-directed velocity at point *C*. When it reaches point *D*, however, it encounters a field propelling it toward the plate. Its effect is to *increase* the velocity of the electron.

Naturally, some of the electrons will actually strike the screen wires, and some *screen current* will flow. But most of them will go right on to the plate, since the spaces between the screen wires are a lot bigger than the wires themselves. This will be true *even if the plate voltage is less than the screen voltage*, though a larger proportion of the electrons will then reach the screen. Under this condition, the field distribution would be like this:

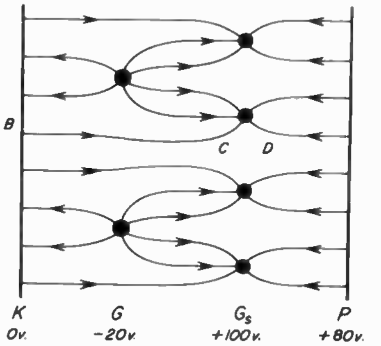

Fig. 19-65

Notice that the only thing that is different from Fig. 19-64 is the direction of the field between the screen and plate. Between points *B* and *C* the force on an electron would be the same as before. Hence it would have the same speed at point *C* as when the plate potential was 120 volts instead of 80. Now what happens when the electron reaches point *D*? It encounters a retarding field. But, unlike an electron at the cathode, its velocity at *C* is so high that it goes right on to the plate anyway, just as the baseball continued to move through the air in spite of the retarding effect of the air friction. The effect of the retarding field between screen and plate is merely to slow down the electron, not to stop it.

In order to understand why this field is insufficient to stop the electron, it is necessary to realize that *the velocity of a moving electron at any point in an electric field depends only on the potential difference between that point and the point of emission.* Hence, reducing the plate voltage merely reduces the speed of the electrons when they reach the plate – it does not prevent their arrival. If we wanted to prevent an electron from getting to the plate, once it had reached point *D*, we would have to make the plate voltage slightly negative with respect to the cathode.

Tetrode Characteristics. – We have stated that if the plate voltage is greater than the screen voltage, the plate current is little affected by changes in the plate voltage. We would therefore expect the plate characteristic curves of a tetrode to be nearly horizontal. Such is the case, as the following plate characteristics of a typical tetrode show. See Fig. 19-66.

The curves also show a remarkable fact. When the plate voltage is reduced to a value near the screen voltage, or less, the plate current falls off rapidly. This we might expect, because of the stronger field near the screen wires under this condition. But when the plate voltage is further reduced, the plate current can actually become *negative.* This means, of course, that *electrons are flowing away from the plate, inside the tube, instead of toward it.* Finally, a further *reduction of plate voltage* results in an *increase* in the plate current. Our next topic will explain this screwball behavior, as well as the broken curves marked "screen current".

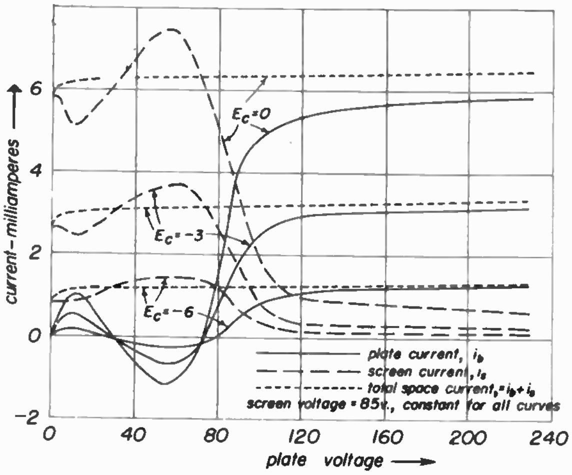

Fig. 19-66

Secondary Emission. – Thermionic emission is only one of several ways in which electrons can be freed from the surface of metals. If an electron strikes a metal at high velocity, it can knock out of the metal one or more *secondary electrons,* just as if you throw a stone with sufficient force into an apple tree, you can often knock down one or more apples. The plate current electrons in a vacuum tube arrive at the plate at very high velocity. When they strike the plate, they cause the *secondary emission* of a certain number of electrons.

In the case of the diode and triode, secondary emission causes no complications, because the electric field near the plate is in a direction to propel these secondary electrons right back to the plate where they came from. Thus the average number electrons reaching the plate each second is the same as though there were no secondary emission. But Fig. 19-65 shows that in a tetrode, if the screen voltage is higher than the plate voltage, the field near the plate will propel electrons *away from* the plate, *toward the screen.* (Recall that, unlike the electrons arriving from the cathode, the secondary electrons do *not* have a high velocity at the plate.) This tends to *reduce the plate current,* and *increase the screen current,* as the plate voltage is reduced. If each primary electron, on the average, knocks off more than one secondary electron, more electrons will leave the plate than arrive there, and the plate current then reverses direction. In some tetrodes, the average number of secondary electrons is less than one for each primary electron. The plate current does not, in such cases, actually become negative. But the characteristic curves of all tetrodes exhibit to some degree the reverse bend shown in Fig. 19-66.

This strange behavior, in most applications, is highly undesirable. Efforts to overcome the effect of secondary emission at the plate led to the development of two other tube types – the pentode and the beam power tube.

Effect of Screen on Grid-Plate Capacitive Coupling. – The most undesirable effect of capacitive coupling between plate and grid is that high frequency variations in plate voltage cause variations in the field strength in the neighborhood of the grid, and thus induce a-c voltages between grid and cathode, *in addition* to the grid voltage changes produced by the grid signal. This capacitive coupling constitutes a feedback path from plate to grid, as we noted earlier.

Now compare Figs. 19-64 and 19-65. As shown therein, a change of plate voltage affects substantially *only the field between screen and plate.* The field strength in the region of the grid is practically unaffected by the plate variations, and hence virtually no capacitive coupling between plate and grid exists. This shielding effect of the screen, so far as a-c is concerned, is greatly aided by the screen by-pass condenser usually employed with tetrodes, thus:

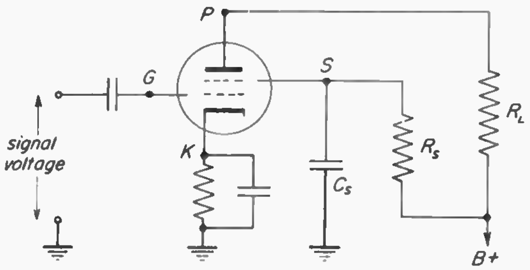

Fig. 19-67

The condenser C_s by-passes the a-c component of the screen current to ground, placing point *S* practically at a-c ground potential. This means that no a-c voltage exists between *S* and *K*, no matter how the potential of point *P* varies. Hence the plate voltage variations can have no effect on the grid.

Another way of looking at it is like this:

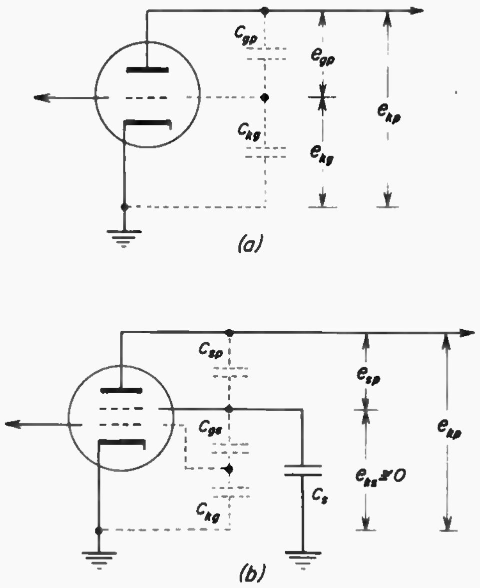

Fig. 19-68

In (a) we have represented the interelectrode capacitance of a triode by broken lines. The a-c voltage between plate and cathode is effectively applied across C_{gp} and C_{kg} in series. They act as an a-c voltage divider, developing a voltage from cathode to grid that is in addition to any external signal applied to the grid. In (b) we see the corresponding condition for the tetrode. Again the a-c voltage from cathode to plate appears across a capacitive voltage divider. But C_s is so much greater than C_{sp} (and its reactance therefore so much less) that substantially all of e_{kp} appears across C_{sp}, and almost none across C_s. This very small a-c voltage, e_{ks} is across another capacitive voltage divider – C_{kg} and C_{gs} – and an even smaller fraction of the plate voltage, therefore, appears between cathode and grid.

The Pentode. – The effects of secondary emission at the plate are overcome very simply in the pentode. A *third grid* (fifth electrode) is inserted between the screen and plate. It is connected, either inside the tube or through the external circuit, directly to the cathode. It is called the *suppressor grid,* because it effectively suppresses the secondary electrons, preventing them from reaching the screen. A quick glance at the interelectrode field will make this clear:

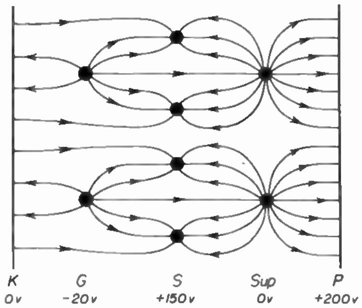

Fig. 19-69

Secondary electrons knocked out of the plate now encounter a strong retarding field, which forces them back to the plate. But electrons moving from the cathode region are not prevented from reaching the plate, because of their high velocity. Up to the moment it reaches the region of the screen, an electron from the cathode experiences forces exactly like those of the tetrode. But as soon as it passes between the screen wires, it encounters a retarding field. This field slows the electrons down in this region, but it does not stop them. As they pass between the suppressor wires, they are again propelled toward the plate, and arrive there with a high velocity that depends only on the plate potential.

Pentode Characteristics. – The plate characteristics of a typical pentode look like this:

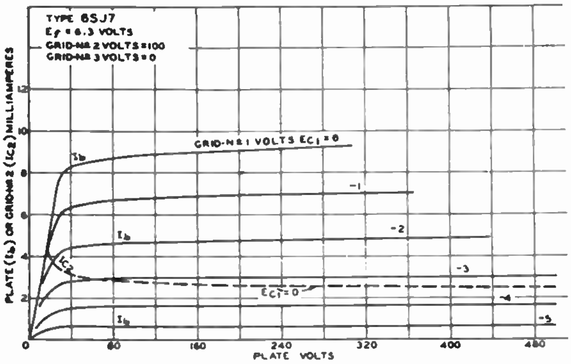

Fig. 19-70

Note that as long as the plate voltage does not fall below a certain value, *the plate current is nearly unchanged by even large changes in plate voltage.* This is indicated by the nearly horizontal form that the plate current curves take. But there is no dip in the curves at low plate voltages, as there was in the tetrode curves.

Constants of a Pentode. – The amplification factor, transconductance and plate resistance of a pentode can be found graphically from the characteristic curves in much the same way as we explained for a triode. However, because large changes of plate voltage cause such small changes in plate current, it is difficult to read the curves precisely enough to get an accurate value of r_p. However, you can easily find μ and g_m from the curves, and then use the relation:

$$r_p = \frac{\mu}{g_m}$$

The μ and r_p of a pentode generally are much higher than for a triode. For instance, the 6SJ7, whose characteristics are given in Fig. 19-70, has a μ of 1100, and a plate resistance of 700 K. The same tube, connected as a triode (that is, with screen and suppressor connected to the plate), has a μ of only 19 and a plate resistance of about 8 K. The reasons for this great difference are not simple, but are concerned with the geometry of the tube itself, and of the interelectrode fields.

Pentode Load Line. – The dynamic operation of a pentode may be examined in the same way as for a triode, by constructing the load line on the plate characteristics. Note however, that the magnitude of the load resistance makes a big difference in the amount of distortion of its signal. The reason for this is apparent in the following figure:

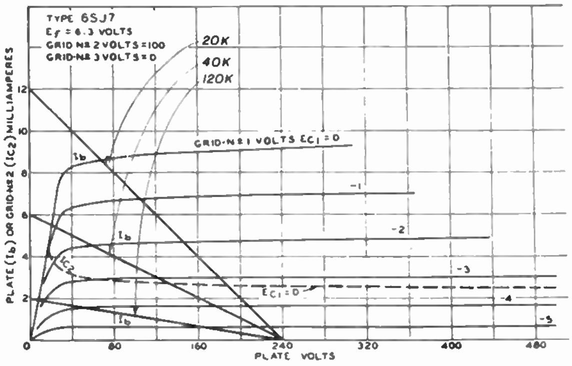

Fig. 19-71

If we set the bias voltage at -2 volts, with a 20 K load resistance, a signal of 2 volts peak value will swing the plate current about equal amounts above and below the quiescent value. But if we increase the load to 40 K, and keep the bias and signal the same, the plate current will swing about three times as far below the Q point as it does above. This, of course, results in excessive distortion.

This raises a difficulty. For high gain, remember, we want a high value of load resistance. We can increase the gain without appreciable increase in distortion, however, if we change the bias voltage *and* keep the signal amplitude fairly small. Thus, if we use a load of 120 K, and increase the bias to about 4.5 volts negative, we can get reasonably linear operation with a grid signal of about 1.5 volts (peak value). It works out that we get a greater voltage output with the smaller signal and larger load resistance than vice versa.

Pentode as a "Constant Current" Source. – The fact that the plate resistance of a pentode is very high, accounts for the fact that the pentode is sometimes referred to as a *constant current source of a-c*. If we draw the diagram of the a-c equivalent circuit of a pentode, as we did in Fig. 19-49, we would usually find that the plate resistance is very much larger than the load resistance. So far as the a-c is concerned, the plate resistance behaves like the *generator resistance* that we talked about in Lesson 18. Since it is so much greater than the load resistance, changes in the latter have very little effect on the amplitude of the plate current. The tube, therefore, delivers a nearly constant amount of alternating current to a load, regardless of variation in the magnitude of the load impedance.

This characteristic of the pentode means that it is well adapted to use as an *r-f amplifier*, feeding into a parallel tuned circuit as a load, or into a double-tuned r-f transformer. This circuit, you will recall, was discussed in Lesson 18. It is a common pentode application in radio receiver i-f circuits, where sharp selectivity is desired.

Variable Mu Tubes. – In certain applications, it is desirable that an amplifier should provide greater amplification when the bias voltage is small than when the bias is large. One such application is a tube whose bias voltage is automatically varied in accordance with changes in the amplitude of the signal, as by the AVC circuit of a radio receiver or the AGC in a TV receiver.

Pentodes with a variable μ are made by constructing the grid so there are wider spaces between the grid wires at some points than at others, as shown in Fig. 19-72.

With a small negative voltage on the grid, electrons from the ends of the cathode are blocked by the retarding field of the grid only near its ends, where the wires are close together, but can still get through to the plate from the center of the cathode.

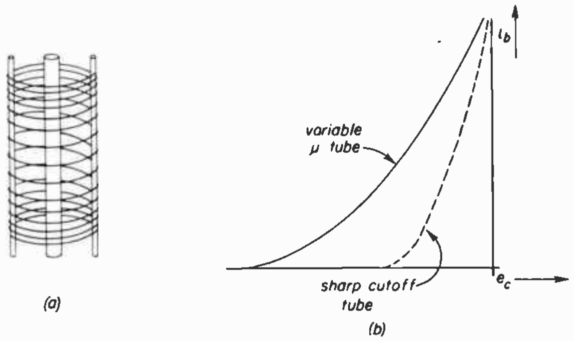

Fig. 19-72

As the grid voltage becomes more negative, more and more turns of the grid wire are able to cut off the flow of electrons between the wires, until finally the plate current is completely cut off. This results in a dynamic transfer characteristic as shown by the solid curve in Fig. 19-72 (b). The gain of the amplifier is indicated by the steepness of this curve, which varies greatly as shown. For comparison, the corresponding characteristic of an ordinary, or *sharp cutoff*, pentode is shown by the broken line. Because it takes a larger grid bias voltage to cut off a variable mu tube completely, this type of tube is also called a *remote cutoff* pentode.

Since the transfer characteristic of a variable mu tube is so curved, it is clear that the signal amplitude must be kept quite small in order to avoid large distortion. This is not really much of a problem, however, since such tubes are usually used as the first of several stages of amplification; and they are usually used as r-f amplifiers feeding into tuned loads, which can remove the distortion frequencies anyway.

Beam Power Tubes. – One disadvantage of a pentode is that, although large amplification of *voltage* is obtained, the plate current is small, and the *power* output is therefore low. A special type of tube has been developed that has many of the advantages of the tetrode and pentode, but delivers much greater a-c power.

The beam power tube is actually a tetrode, and is so represented in schematic diagrams, but the structure of the electrodes differs from that in an ordinary tetrode. The effects of secondary emission are overcome in a different way than in the pentode. Recall that the space charge in any tube sets up a retarding field, simply because it is a dense cloud of negative charges. In the beam power tube, the plate current electrons are concentrated in a beam directed at a small portion of the plate. Near the surface of the plate, the electron density is thus made very large, and the electrons themselves set up a field that suppresses the passage of secondary electrons to the screen in the same way that the suppressor does in a pentode. The structure of a beam power tube is like this:

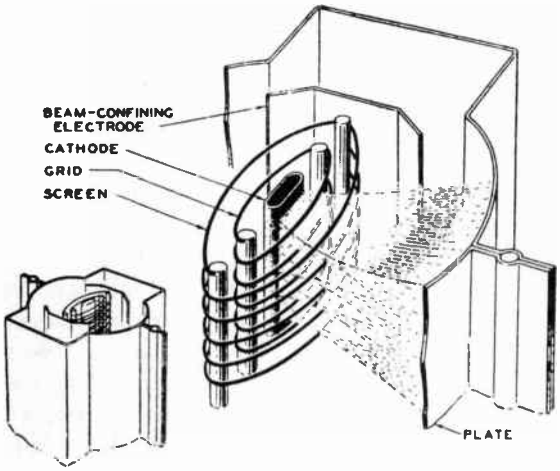

Fig. 19-73

The plate characteristics of a beam power tube are much like those of a pentode, except that the plate current can go as high as several hundred milliamperes, instead of 10 or 15 ma. in most pentodes. They are used in the output stage of a circuit, supplying the required power to operate some reproducing device, such as a loud speaker.

Multigrid Tubes. – Strictly, any tube with three or more electrodes is a multigrid tube. As we are using the term, we mean a tube having more than five electrodes. Tubes are made with as many as six grids (eight electrodes) for certain applications.

One common type is the *hexode*, used as a *mixer* tube. Essentially, this is a pentode, plus a second control grid. Two different signals are applied to the two control grids – such as a received radio signal, and the output of a local oscillator. The tube mixes the two, and because of the nonlinearity of its characteristic, develops new frequencies. Among these are the *difference* frequencies between the two applied frequencies. This difference frequency, in a radio receiver, is the intermediate frequency, or i-f.

The *pentagrid converter* has five grids (seven electrodes). It combines the functions of an oscillator and a mixer in one tube. A pentagrid converter and a hexode are represented schematically like this:

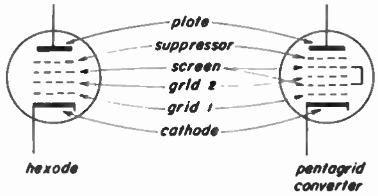

Fig. 19-74

Multipurpose Tubes. – Remember when the quality of a radio receiver was judged (by the customers, at least) by the number of tubes it contained? Later on, the industry found that often one tube could be made to serve two or more purposes, just by putting two independent sets of electrodes inside the same envelope. This resulted in fewer tubes, lower manufacturing costs, and sometimes better performance.

It is now common practice to use tubes that combine two or more functions. There are many combinations available. Some of them are represented schematically in Fig. 19-75.

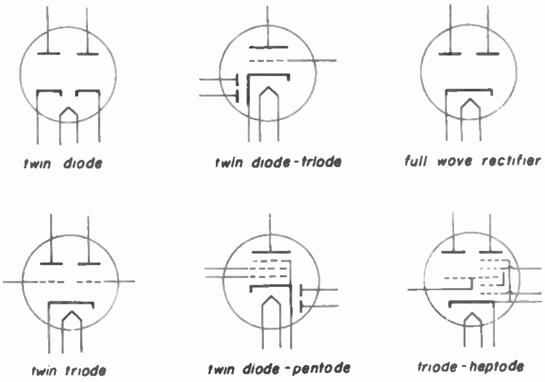

Fig. 19-75

Double diodes can be used as full wave rectifiers, in place of two separate diodes. They are made with separate cathodes for the two plates, or with a common cathode. Diode-triodes are often used in radio receivers for the second detector and audio amplifier. The addition of a second diode plate provides a source of AVC voltage, thus combining in one envelope the functions of three separate tubes.

There is no point in enumerating the uses of the multi-purpose tubes. The main point to remember is that each set of electrodes in such tubes works on exactly the same principles, and in the same way, as though they were enclosed in a separate envelope of their very own. If you have absorbed the general principles of tube operation presented in this lesson, you are now equipped to follow the explanations of specific TV receiver circuits to come in later Lessons, no matter how complicated the tubes may look when you first see them on the schematic.

◆

GLOSSARY OF ABBREVIATIONS USED FOR VACUUM TUBE CIRCUITS

C_c	Coupling condenser
C_g	Grid condenser
C_{gk}	Interelectrode capacticance between grid and cathode
C_{gp}	Interelectrode capacitance between grid and plate
C_{gs}	Interelectrode capacitance between grid and screen
C_k	Cathode by-pass condenser
C_{pk}	Interelectrode capacitance between plate and cathode
C_s	Screen by-pass condenser
C_{sp}	Interelectrode capacitance between screen and plate
E_b	D-c voltage between cathode and plate
e_b	Instantaneous voltage between cathode and plate
E_{bb}	Plate, or B+, supply voltage
E_{b0}	Quiescent plate voltage
E_c	D-c voltage between cathode and grid
e_c	Instantaneous voltage between cathode and grid
E_{cc}	Grid bias supply voltage
E_g	Rms value of a-c component of grid voltage (grid signal)
e_g	Instantaneous value of grid signal voltage
E_{gm}	Maximum value of grid signal voltage
E_o	Rms value of output voltage
e_o	Instantaneous value of output voltage
E_p	Rms value of a-c component of plate voltage
e_p	Instantaneous value of a-c component of plate voltage
E_{pm}	Maximum value of a-c component of plate voltage
E_{RL}	Rms voltage drop across load resistor
e_{RL}	Instantaneous voltage drop across load resistor
E_s	Rms signal voltage
e_s	Instantaneous signal voltage
G	Control grid
g_m	Transconductance
G_s	Screen grid
I_b	D-c value of plate current
i_b	Instantaneous plate current
I_{b0}	Quiescent plate current
I_c	D-c value of grid current
i_c	Instantaneous grid current
I_p	Rms value of a-c component of plate current
i_p	Instantaneous value of a-c component of plate current
I_{pm}	Maximum value of a-c component of plate current
K	Cathode
L_g	Grid coil
L_p	Plate coil
P	Plate
R_b	D-c plate resistance
R_g	Grid resistor
R_k	Cathode resistor
R_L	Load resistor
r_p	A-c plate resistance
μ	Amplification factor

◆

NOTES

NOTES

NOTES

NOTES

NOTES

TELEVISION SERVICING COURSE

PREPARED BY

RCA INSTITUTES, INC.

A SERVICE OF RADIO CORPORATION OF AMERICA

HOME STUDY DEPARTMENT

350 West 4th St., New York 14, N. Y.

LESSON 20

TRANSMISSION LINES

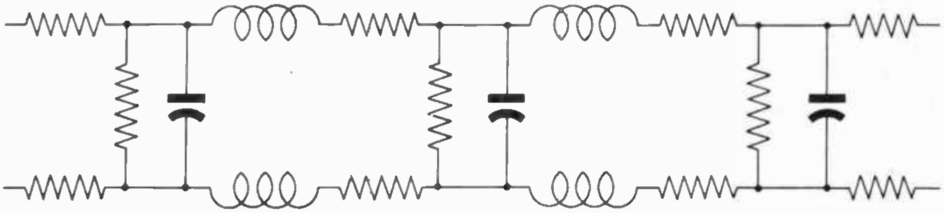

Lesson 20

THE FUNCTION OF TRANSMISSION LINES

20-1. You already have a pretty good handshaking acquaintance with transmission lines, as used in practical television receiving installations. Now it's time to dig into the how and why of their operation, design, and manufacture, for such knowledge will increase your ability to lick the tougher problems, and add to your understanding of all sorts of radio phenomena. But before we narrow our study down to just the kind of transmission lines you come up against in your daily work, it's a good idea to rear back and see what the *general* idea of an electrical transmission line is all about, and how radio frequency transmission lines fit into the general picture.

First off, the term "transmission line" refers to practically any set of conductors and their associated insulators and supports, that are used to convey some kind of electrical energy from one place to another. That big line of steel towers supporting the heavy cables you see stretching from the power dam in the hills to the city is a transmission line, just as truly as a length of twin lead is. However, there is an important difference in the kind of electrical energy they carry, which has so much bearing on the way they operate that we'd better tackle it right here. Aside from occasional r-f carrier current communication carried on over the big power transmission lines, the energy they carry is always at some very low frequency, such as 25, 50 or 60 cycles per second, the latter by far the most common.

The wave length of such a low frequency alternating current is about 3100 *miles*, which means that all practical power lines currently in use are only a small fraction of a wave length long at their operating frequency. As you will soon see, this is fundamentally different from the situation in practically all radio transmission lines, and for that reason we can drop any further consideration of power transmission lines, as they do not illustrate the important principles we must understand in radio work. But don't forget *why* we can do this.

The Need For Transmission Lines. – Man's advancing technologies have solved many problems more or less satisfactorily, and one of these is the matter of getting electrical energy from one place to another with reasonable efficiency. The transmission line is the gadget that makes this possible, and its worth while to remember that carrying some relatively weak currents of high frequency electrical energy from one place to another is really about all we want our radio transmission lines to do. True, in radio and television we're mostly interested in the *intelligence* conveyed by the variations in these small h-f electrical currents, rather than the total amount of energy. But we have to have the h-f energy to carry the intelligence, as you learned in Lesson 1, and elsewhere in this Course.

As these lines are written, television is one of the newest and fastest growing technologies. The problem of conveying the h-f electrical energy that is the television signal exists in many places, in both the transmitting and receiving ends of the system. Indeed, to be strictly accurate, we might say that from the instant the light from the scene televised produces an electrical signal output from the television camera tube, the problem becomes one of making the signal strong enough to operate the thousands of receivers in the surrounding area, *and getting it to them unaltered in character.*

Between the transmitting antenna and the receiving antennas, the signal is carried by electromagnetic waves radiated outward from the transmitting antenna. This is actually an extremely inefficient way to get the signal from one place to another, if we consider merely the ratio of transmitted power to the power actually picked up by all the receiving antennas. By far the larger part of the signal energy radiated from the transmitting antenna goes merrily on its way, passing between or over the receiving antennas. Only that part of the radiated energy which actually generates current in a receiving antenna is really doing what we want it to do, and the rest is wasted, so far as any desired effect is concerned. Unfortunately, there doesn't seem to be any better way to solve this problem, at least not at present. Nobody knows where the next television set will be installed, or the next thousand, or million, so the radiated energy has to blanket the whole area, ready to generate a signal voltage in each new antenna when it is erected.

Energy Losses in Transmission Lines. – However, when we want to get the r-f energy from one particular place to another particular place, and *not* spread it around every which way, there's a less wasteful way of doing the job. Instead of using our r-f current to generate an electromagnetic wave and radiating it out in all directions from an antenna, we can send it along a system of electrical conductors. That way, the only serious losses are those due to resistance in the line conductors and internal losses in the dielectric materials that support and insulate the conductors from each other. These losses can be kept low by proper choice of conductors and dielectric materials, and suitable physical arrangement of them. Which brings us to the matter of the electrical laws and principles that govern the design, manufacture, and operation of the lines we use in television work. And right here is as good a place as any to mention two characteristics of a-c electricity that have a profound effect on the design of transmission lines. These are as follows:

1. For a given conductor, the ohmic resistance increases as the applied a-c frequency increases, because of *skin effect*. We'll deal with this effect in detail later in the Lesson.
2. The electrical losses in dielectrical materials also increase with increasing frequency. This effect will also be treated in detail later in the Lesson.

These two effects become so serious at the frequencies used in television and many types of radio communication that special materials and designs are necessary if the electrical efficiency is to be high. As an example, rubber is a very good insulator for d-c, or at a-c frequencies up to 100 kc or so, but becomes progressively worse as the frequency is increased. At the frequencies used for television broadcasting its internal losses are so high that it is practically useless, which is one of several reasons why ordinary lamp cord won't do for television transmission lines. In fact, these two effects become so great as the frequency increases that only a few materials are satisfactory for use above 8 or 10 mc, if the lowest possible loss of r-f energy is important.

What Is a Transmission Line? – Right here we may as well put down a definition for a transmission line, as we will use the term in television and radio work in this course. *A transmission line is a system of electrical conductors with uniformly distributed characteristics, designed to conduct radio frequency energy with as little loss or alteration of characteristics as is practicable.* This definition is not one that will send heads of University E.E. Departments into transports of joy, but it will serve our purpose here, so we'll use it.

Consider first the part of the definition that says "with uniformly distributed characteristics." That means that the properties common to all electrical conductors, namely inductance, capacitance, and resistance, are evenly spread along the length of the system. Thus, any small section of the line (say an inch) cut from one part would show exactly the same amount of these properties as an equal sized section cut from another part. And of course, that would be true for equal sections of any other length, taken from any part of the line. This matter of uniformly distributed properties is extremely important in considering transmission lines, for it is upon this uniform distribution that the proper function of the line depends. Indeed, it is what makes such lines fundamentally different from just any haphazard arrangement of wires, and from electrical circuits composed of lumped units of inductance, capacitance and resistance.

Comparison of Line and Antenna. – You'll remember that in Lesson 6 and elsewhere it was brought out that the main purpose of an antenna was to couple onto the rest of the universe electromagnetically, either in order to radiate (transmit) or absorb (receive) radiant electromagnetic energy waves with the greatest practicable efficiency. Considering a transmitting antenna for the moment, it is obvious that what we want the device to do is to *lose energy* to surrounding space efficiently. To accomplish this, a simple resonant antenna like a half-wave dipole is so designed that each point in one half of the dipole radiator is electrically as far removed from the corresponding point in the other half as possible, like this:

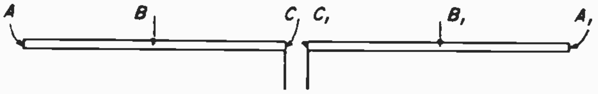

Fig. 20-1

Point A, the end of one half, is as far removed as possible from point A_1, point B near the center of the left half is as far removed as it can be from point B_1, and the same is true for any two such opposite points in the antenna. From what we have learned of antenna theory, it is clear that at the instant in a cycle when point A is most positive, point A_1 will be most negative, and so on for all other opposite points in the antenna. Now, we need not go into a full re-examination of antenna theory to see that at a given instant, any unit of charge in the antenna we select to consider *does not have an equal unit of opposite charge near it to balance its field, and cancel its effect at a distance.* As a result, a part of the field of each unit of electric charge in the antenna extends off into space, and can thus make its presence detectable at distant points. There is more to antenna theory than this of course, but this fragment will serve to illustrate our point here, that the field between units of opposite charge is not confined in an antenna, but extends theoretically to an infinite distance.

Now then, suppose we want to set up a system of conductors that will carry r-f current *without* making the presence of the current detectable at a distance? If we arrange them parallel to each other, and near enough so that opposite charges are electrically close to each other, the effect ought to be different. It ought to, and it is.

With opposite charges electrically near to each other, the field is concentrated almost entirely in the space between and immediately around them, and very little of it extends out into the surrounding space. Incidentally, by electrically "near" each other, we mean within about 0.01 wave length or less, at the frequency under consideration. This distance is just an arbitrary figure used for convenience in discussion, for actually there is no sharp limit beyond which the line leaks energy badly, and under which it does not radiate at all. Actually, radiation from a line in which the conductors are spaced no more than a hundredth of a wave length apart will be negligible for practical purposes, if the line is properly operated.

Well and good, let's consider for the moment just what we want a transmission line to do again. Since the idea is to get r-f energy from one point to another with as little loss or alteration as is practicable, this scheme of arranging the conductors electrically near and parallel to each other looks like the answer. Consider the conditions, for instance, if we grab that dipole antenna we were just reviewing, and swing the two halves around through arcs of 90 degrees, so that they lie parallel and close to each other, like this:

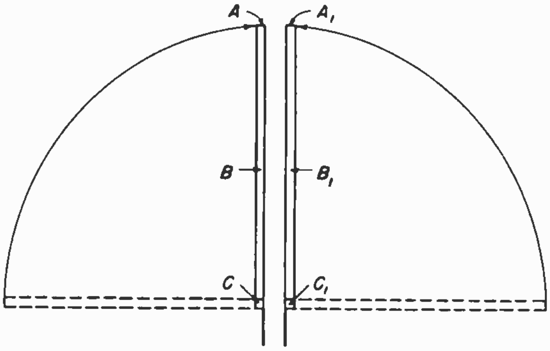

Fig. 20-2

Presto! Point A is now electrically near point A_1, its electrical opposite, and the same applies to point B and point C. Our dipole no longer radiates, because the field along the wires is now confined almost entirely to the space between and immediately around them. We have constructed a section of good transmission line.

PROPERTIES OF TRANSMISSION LINES

20-2. Now we can look into the electrical properties of a line in a bit more detail. We have seen that it is made up of electrical conductors so arranged that *the fields around opposite charges balance and cancel each other's effect at appreciable distances from the line.* Naturally there has to be some way to hold the conductors in the right physical relationship to each other, and that is where the insulating material comes into the picture. Obviously, using a piece of conducting material to support our two line conductors would short circuit them, so insulating material must be used. Also, since transmission lines are usually many wave lengths long, its pretty clear that the insulating support must be used in such a way that the conductors will be held at the proper spacing along their entire length, if we are to maintain the electrical properties the same at all points. In practical lines for use at television frequencies, this means that the insulating material must extend uniformly along the whole length of the line. This in turn requires that the dielectric material used as transmission line must have *very low electrical losses at all the frequencies to be carried,* otherwise part of the weak r-f current generated in the antenna by the waves radiated from the distant transmitter will be wasted heating the dielectric of the line instead of pushing the spot around over the kinescope screen.

Physical Construction. – We now have the essentials of a practical transmission line – the conductors that carry the current, and the dielectric material which holds the conductors in the proper position with respect to each other. Here's how a piece of practical transmission line constructed according to these ideas might look:

Fig. 20-3

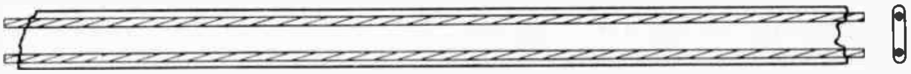

By now you should recognize your old friend parallel line, because that's about what we've come up with. The conductors in such line are stranded copper wires, and the strip of dielectric material used for insulation is made of polyethylene, a synthetic plastic with extremely low electrical losses and satisfactory mechanical properties. You already know how widely this kind of line is used in television receiving installations. Of course there are other types also, but before we take up detailed discussion of the various types of practical lines, we'd better go further into the electrical properties of lines of all types, whatever their physical arrangement of conductors and dielectric.

Electrical Properties. – These properties are *inductance, capacitance, series resistance* and *shunt conductance,* and they have one very important characteristic in common. *All are distributed uniformly along the length of the line.* Most other radio components have these same properties in some measure, *but not uniformly distributed along all their length.* A coil or capacitor has relatively large inductance or capacitance within a small physical volume. But a coil has some distributed capacitance, and a capacitor has some series inductance. The amount of these opposite properties is very small in well designed units. As we pointed out in Lesson 18, however, even these small quantities cannot always be neglected. Incidentally, that property of shunt conductance we mentioned is not something new, dragged in to confuse the problem. We could describe the same effect by saying that the line has high, but not infinitely high, resistance between its conductors, or in other words finite shunt resistance. That means it will conduct across from one wire to another a little bit (very little indeed in a good line), and it is sometimes convenient for engineering purposes to call this shunt conductance. Shunt resistance and shunt conductance are actually reciprocal quantities, one being zero when the other is infinite, and vice versa.

Equivalent Network of a Transmission Line. – In order to understand the uniform distribution of properties along a line better, have a look at the equivalent circuit shown in Fig. 20-4.

This is actually a schematic representation of an ordinary piece of line, such as was shown in Fig. 20-3. Since the inductance of each conductor is uniformly distributed along its length, we can draw the total inductance as an extremely large number of very small pure inductances connected alternately in series with an extremely large number of very small pure resistances, which represent the series r-f ohmic resistance of the wire. The capacitance and shunt conductance can likewise be represented by an extremely large number of very small shunt capacitances and very large shunt resistances distributed evenly along the line.

Fig. 20-4

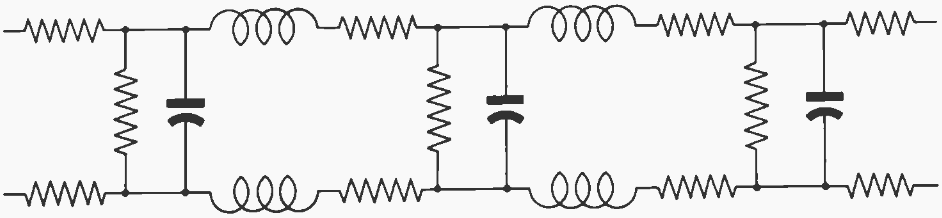

Properties of Insulating Materials. – In practical transmission lines designed for high frequency use, the series resistance is small but of some importance, and the shunt conductance is extremely small. However, ordinary lamp cord and other such cords and cables, meant only to carry current at power line or audio frequencies, are usually very inefficient when used as transmission lines for carrying high frequency current. This is usually due to excessive shunt conductance rather than series resistance in the conductors, and results from losses in the dielectric material. The material used for such lines is perfectly adequate for the use for which it is intended, of course. It's worth mentioning at this point that moisture in the dielectric, or in fact anywhere in the strong part of the electric field between and around the conductors, causes the losses in the line to go up sharply. Here again, the dielectric materials used for insulating power and audio lines are inadequate for use at r-f, because most of them absorb relatively high percentages of water vapor from the atmosphere, particularly during periods of high humidity, or during a rain storm. Right here is a good place to mention something that may come as a surprise. This is the almost incredible ability of water to soak into almost any substance enough to seriously affect the electrical properties of the material. We usually think of rubber as being impervious to water, for instance. Yet rubber absorbs enough water to seriously alter its dielectric properties at high frequencies. Now, this does not mean that your rubber rain coat is going to start leaking, just because you now know that rubber absorbs moisture. The actual quantity of water absorbed is small, but the electrical effect is large. Incidentally, this is also true of a great many other materials we ordinarily think of as "waterproof", such as oils, paints, waxes, etc. The important thing to remember is that most of the materials used as dielectrics absorb *some* moisture, and also have an invisible film of moisture on their surfaces. During weather conditions of medium to high humidity, the amount of moisture absorbed or adhering to the surface may be large enough to seriously alter the electrical properties of the material.

Another important point about moisture is that even if it is *not* absorbed very much, but only forms a film on the surface of the dielectric, it can still increase the electrical losses of the circuit. Even in a good transmission line for instance, the electric field is not confined entirely to the interior of the dielectric material. Some of the field extends outside the dielectric, and a moisture film or actual drops of water on the surface will change the impedance of the line and add seriously to the losses.

Later we'll go much further into the things that can cause loss of signal energy in transmission lines. For now, it will be enough to remember that even the best conductors have some resistance. The best dielectrics have some shunt conductance losses, and dirt and moisture in the field between and near the wires also steal a bit of the available energy.

Distributed Inductance and Capacitance. – So much for the specific electrical properties of a transmission line. Having them fixed in mind, we can now consider what governs the actual values of these properties per unit length of a given type of line. The inductance per unit length of a round wire is determined by the diameter, larger diameters having less inductance. The capacitance between adjacent conductors depends on their effective surface areas, the distance between them, and the dielectric constant of the insulating material separating them. In the case of common two-wire transmission line like twin lead, the dielectric is partly air and partly polyethylene, and as a result the capacity per unit length is more readily measured than calculated. However, it gets larger as the dielectric constant of the material used is increased, and with the amount of solid material actually used between and around the conductors. It also gets larger as the wire diameter is increased, and as they are brought closer together.

Incidentally, in thinking of dielectric constants, it's well to remember that the constant of airless space (a perfect vacuum) is considered to be 1.0, not zero. The value for dry or fairly dry air is very nearly the same, and in fact, air at normal temperatures and pressures is a very good, low loss dielectric gas. The dielectric constants of materials used as insulators in radio and television work are all greater than 1.0. Representative values for a few typical materials are listed in the table on the next page.

Bear in mind that the dielectric constant does not tell much about how useful a dielectric material is. It merely indicates what increase in the capacity of a condenser will be produced if the material is used in the condenser as the dielectric, in place of air or empty space.

MATERIAL	*DIELECTRIC CONSTANT*
Alsimag	5.7 to 6.3
Bakelite (black)	5.0 to 5.5
(mica filled)	5.0 to 6.0
Celluloid	4.0 to 16.0
Cellulose acetate	6.0 to 8.0
Formica	4.6 to 4.9
Glass (electrical)	4.0 to 5.0
Gutta percha	2.5 to 4.9
Lucite	2.5 to 3.0
Mica	2.5 to 8.0
Mycalex	6.0 to 7.4
Mykroy	6.5 to 7.0
Nylon	3.6 to 3.9
Paper	2.0 to 2.6
Polyethylene	2.3 to 2.4
Polystyrene	2.4 to 2.9
Porcelain	6.2 to 7.5
Rubber	2.0 to 3.5
Steatite	4.4 to 6.5

Skin Effect. – The series resistance of transmission line conductors at a given frequency depends on the specific resistivity of the material, and the cross section area of the part of the conductor *actually carrying the current.* The reason for the emphasis here is, of course, the phenomenon called *skin effect,* which was discussed in Lesson 18. You'll recall that at high frequencies, the current is carried only in a thin "skin" on the surface of the conductor. The higher the frequency, the thinner the skin that must carry the bulk of the current. The reason for the effect is that the center part of the conductor is surrounded by more magnetic flux lines than the outer layers, and as a result it has more inductance and impedance. The net effect is that the effective resistance of conductors is always greater for a-c than for d-c, and increases as the frequency of the a-c is increased. At the frequencies used in television, the effective depth of the layer of practical conductors that carries the bulk of the current is very much less than the actual radius of the wire. Naturally the resistance is increased correspondingly. Current distribution in the cross section of a typical round conductor at high frequency looks something like this:

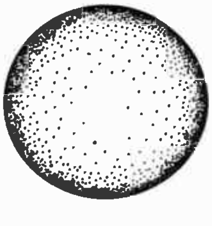

Fig. 20-5

The greater concentration of dots at and near the surface represents greater current density. This non-uniform distribution of current in the conductor will be further affected if the two conductors in a line are closer to each other than eight or ten times the diameter of one wire. Spacings much closer than this cause the current to concentrate more in the part of the conductor nearest the other wire. The net result is again to increase the effective resistance by reason of the non-uniform distribution of current through the conductor cross section, thus:

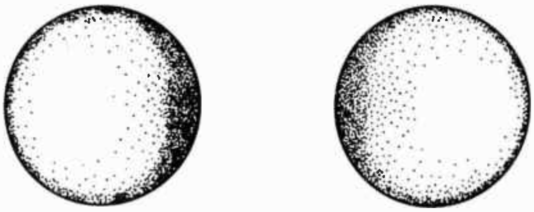

Fig. 20-6

However, *in most practical transmission lines, proximity effect is negligible,* and need not be considered further in this connection.

Shunt conductance, as we have seen, is an effective conductivity across the line from conductor to conductor, along the entire length. It is actually made up of the real resistance of the dielectric, which is very high but not infinite, and an apparent conductivity resulting from the consumption of energy in charging and discharging the dielectric as the electric field alternates with the applied voltage. This is analogous to hysteresis loss in magnetic materials (discussed in Lesson 18), and is sometimes called dielectric hysteresis. The power lost increases directly with frequency, in materials commonly used as line dielectrics. This increase is due to the fact that the same amount of energy is consumed each cycle, and hence the more cycles per second, the more energy lost in a given time. *The net result of shunt conductance in practical lines is a relatively small loss of signal strength.*

THE INFINITE LINE

20-3. Having considered the properties of transmission lines generally, it will be useful to consider the characteristics of a theoretical uniform lossless line extending to an infinite distance. Such a lossless line cannot actually be constructed, of course, because conductors and dielectrics are not really perfect, as we have seen. But it is possible to learn some very useful things about transmission lines more easily if we neglect the small losses in actual lines for the moment. Suppose now we connect a battery of zero internal impedance and a switch in series across the end of our theoretical infinite line, thus:

Fig. 20-7

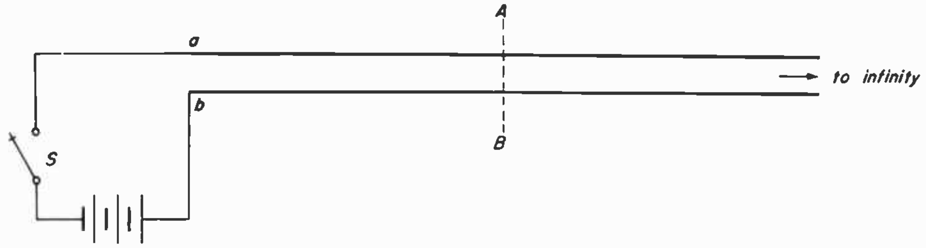

Upon closing the switch, current begins to flow from the battery to charge up the capacitance between the two infinitely long wires. Now, since we know that electric charges do not move with infinite velocity, it follows that the entire length of the line cannot be charged instantly. Instead, the infinitesimal length of the line immediately adjacent to the battery gets charged up to battery voltage first, then the next length, then the next, and so on. The dividing point between the charged and uncharged part of the line moves along the line away from the battery at the velocity of light, and continues on toward infinity.

Current Into Infinite Line. – Of course it takes a finite amount of current to charge up a given capacity to a given voltage. This charging current flows only until the very small part of the line being charged reaches the full battery voltage, and hence flows only to the dividing point we mentioned above as moving away from the source at the velocity of light. To supply this charging current at the moving boundary point between charged and uncharged parts of the line, *a definite amount of conduction current must flow along the line outward from the battery.* The result is a sort of "leading edge" of voltage and current moving down the line toward infinity at the velocity of light. Behind this leading edge there is a steady, uniform flow of current to supply the charging current at the leading edge, as noted above. And ahead of the leading edge, the voltage and current are zero.

It is apparent that *so long as the battery is so connected, a definite, steady flow of current into the line will result, just as if it were a pure resistance of such a value as would pass the current under Ohm's Law.* The line characteristics do not change with current flow or voltage applied, so the actual value of current drawn from the battery by a given line is directly proportional to the battery voltage.

Resistance of Infinite Line. – It should also be plain that *current flow starts the instant the battery switch is closed, and remains at a perfectly constant value as long as the switch remains closed, because the charging current at the leading edge has a constant value, and changes only its physical position along the line.* Thus to the battery the lossless, infinite line exactly resembles a perfect *resistor*, which is an impedance of zero reactance. Actually of course, the line has inductance and capacitance distributed uniformly along its length, but the two properties remain in the same proportion at all points along the line. *As long as the leading edge of the charge does not encounter any point in the line where L and C bear a different ratio to each other, the line will exhibit no reactance, and the charging current will show no change.*

Again, if we start with an infinite line of different conductor diameter and spacing, the only difference in action will be that the absolute value of the charging current will be different. The new line will also show no reactance, and the flow of current into it will have a constant value. *Again the line looks to the battery like a pure resistance* of a definite value, exactly right to draw the charging current from the battery. From above it should also be apparent that *it is the ratio of L to C along the line that determines the actual value of the charging current,* and hence of the apparent resistance. Another look at Fig. 20-4 will help to make the picture clear, as in this equivalent circuit it is easy to see that each unit of capacitance along the line has to be charged through a series inductance, which acts to limit the rate of charge. Be sure in thus visualizing the circuit action to leave the series and shunt resistances out of consideration, as we are still thinking of an imaginary lossless line, having pure L and C only.

And this brings us to an important concept. *This apparent value of pure resistance which a line of infinite length exhibits at its input terminals is called the characteristic, or surge impedance of the line, abbreviated Z_o*, or occasionally Z_C. It is expressed in ohms, and can be calculated from the dimensions and spacing of the conductors for certain types of lines. However, almost all practical television receiving applications will make use of commercially available lines manufactured with specific, known values of Z_o chosen to be most generally useful.

Characteristic Impedance. – Consider now what would happen if we were to break the infinite line of Figure 20-7 at the plane A-B, and connect the battery and switch combination at that point. Since a small part taken from infinity still leaves infinity, the part remaining to the right of A-B still looks like the same characteristic impedance as before. Therefore, if we move the battery back to the terminals a-b as we originally had it, and connect in place of the infinite length of line to the right of A-B a pure resistance Z_R equal in value to the characteristic impedance Z_o, *there will be no difference as far as the action of the circuit is concerned.* Whether discharging into the the lossless, infinite line, into a random length of such line terminated by a resistance equal to Z_o, or directly into such a resistor shunted across its terminals, *the battery sees exactly the same load.* In fact, we can restate the definition of Z_o, the characteristic or surge impedance of a transmission line about like this: *The characteristic impedance, Z_o, of a transmission line is equal to that value of pure resistance which will take the same amount of current from a given source as does an infinite length of the transmission line, or the same as a finite length of line terminated in Z_o.* Still another definition might be: *The characteristic impedance of a transmission line is equal to that value of terminating resistance for which the input resistance and terminating resistance are the same.*

Note that the characteristic impedance of a particular kind of transmission line is a property of the line, and *does not depend on the length of line considered.* The *characteristic* impedance of a ten-inch length of paralell wire line is *exactly the same* as that of a ten-mile length. However, the *input* impedance of the line will be equal to Z_o *only if the line is terminated in a resistive impedance, Z_R, equal to Z_o.*

If we substitute for the battery a source of sine wave radio frequency alternating current, we will find that the infinite line still looks just like a pure resistance equal to Z_o for all frequencies up to those at which the distance between the line conductors becomes an appreciable part of a wave length. In practical lines, this is very far above television frequencies. Since the line exhibits no reactance, r-f voltage and current will show the same values, no matter at what point along the line we measure them (providing we give them time to reach the measuring point, of course), and they will be in phase.

R-f Voltage and Current Along an Infinite Line. – Of course, the voltage and current at a given point along the line will show the usual change of value from instant to instant during any one cycle just as they do on an ordinary a-c power line. Or, if we consider a single instant in time and look along the length of the line we will find a sinusoidal variation of voltage and current from the voltage crest of one wave to that of the next. Also, the ratio of effective (rms) voltage to effective current anywhere along the line will correspond to the surge impedance, Z_o, of the line. We can sum up these facts by saying that *instantaneous voltage and current in an infinite line vary with time at any selected point in the line, are always in phase, and have a ratio determined by the Z_o of the line.*

Furthermore, if the output of the generator happens not to be sinusoidal, *the line still behaves like a pure resistance,* since it is not frequency sensitive. The wave form produced by the generator will remain unchanged as it moves along the line. If we consider an individual wave leaving the generator at a given moment, it is clear that *this same wave,* which we might like to paint green for purposes of identification, will arrive at a distant point on the line at some later instant, *after a time interval determined by the distance, and the velocity of propagation.* It is easy to see from this that a *transmission line can be used as a phase shifter* to produce any desired delay by merely including a sufficient length of line between generator and measuring point.

Fields Around a Two-Wire Line. – Before going on to consider the measuring units used in antenna and line work it may be useful to consider a cross section through a two-wire transmission line carrying energy out of the paper toward us, thus:

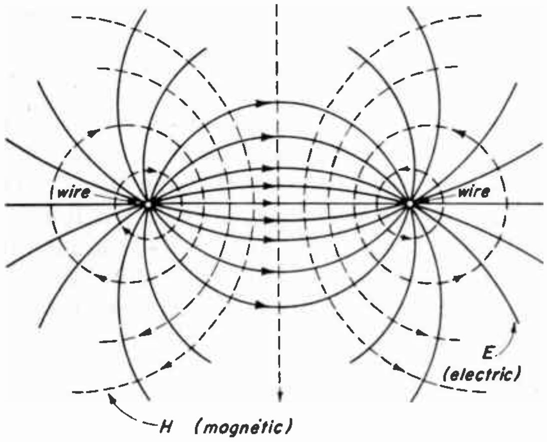

Fig. 20-8

The drawing shows an instantaneous picture of the electromagnetic field surrounding the line, in a plane at right angles to the conductors. For the sake of simplicity a line with air dielectric is considered. At an instant a half cycle earlier or later the direction of *both* fields would be reversed.

Units of Transmission Measurement. – Before we take up the study of transmission line behavior under various operating conditions, it is necessary to know the electrical measuring units used in such work. In practice, these are almost exclusively the *decibel* and the *microvolt.*

The decibel (abbreviated *db)* is a logarithmic unit used to express ratios of power level. Now, we can't digress from the subject of transmission lines to explain logarithms here, since they are a rather good sized subject in themselves. However, we can get a good working idea of how power ratios are expressed in decibels by studying a graph and a few examples, and that will suffice for the present. When comparing two different power levels in radio work, it is often desirable to have a convenient way of stating what *ratio* they bear to each other, rather than giving an absolute value in power units for each. This is particularly true because often the power levels are fantastically far apart in terms of watts.

Consider, for instance, a condition that may exist in a point-to-point radio communications link covering a long distance over the earth's surface. The power in the transmitting antenna may be as much as 100 kilowatts. Yet at the receiving antenna, the actual power intercepted may be no more than 5 or 10 *micro-microwatts.* Expressing this relationship in words, we would have to say that the power in the transmitting antenna was ten thousand million million times that in the receiving antenna. But stating the relationship in db, we can say that the signal is 140 db down from the transmitted power, at the receiving end of the link. For reference, the equation that expresses the ratio of two power levels in db is written like this:

$$N_{db} = 10 \log_{10} \frac{P_2}{P_1}$$

Here N is the number of db (up or down) one power is from the other, $\log_{10}$ is the symbol for the logarithm of a number to the base 10, and P_1 and P_2 are the two power levels being compared, stated in watts or kilowatts. If you do not know logarithms, you can still get a good idea of how this works out in practice by studying the graph of Fig. 20-9.

Here the equation just given is plotted graphically, so that a difference in power level can be translated directly into db, or vice versa. To illustrate, consider an r-f amplifier that requires an input of 0.5 watt to produce an output of 40 watts. Since the output is 80 times as great as the input, we follow the "80" line from the lower edge of the graph (marked "ratio") up to intersect the "power" line, and then to the left to the db scale. From this scale we read 19db, which is the gain of the amplifier in that unit.

But take a look also at the line on the graph marked "voltage or current". Since both voltage *and* current are concerned in power questions, we can work out information about one if we know the other, and the resistance of the part of the circuit we're considering. It is clear that, if we double the voltage across a given resistor, we'll cause twice the amount of current to flow through it. Since power is proportional to the square of the current, the power must go up to four times the original value. Also, it becomes obvious that we can plot one line on the graph to show either voltage or current ratios, and their value in db. As an example, consider an amplifier with input and output impedances of 500 ohms, which re-

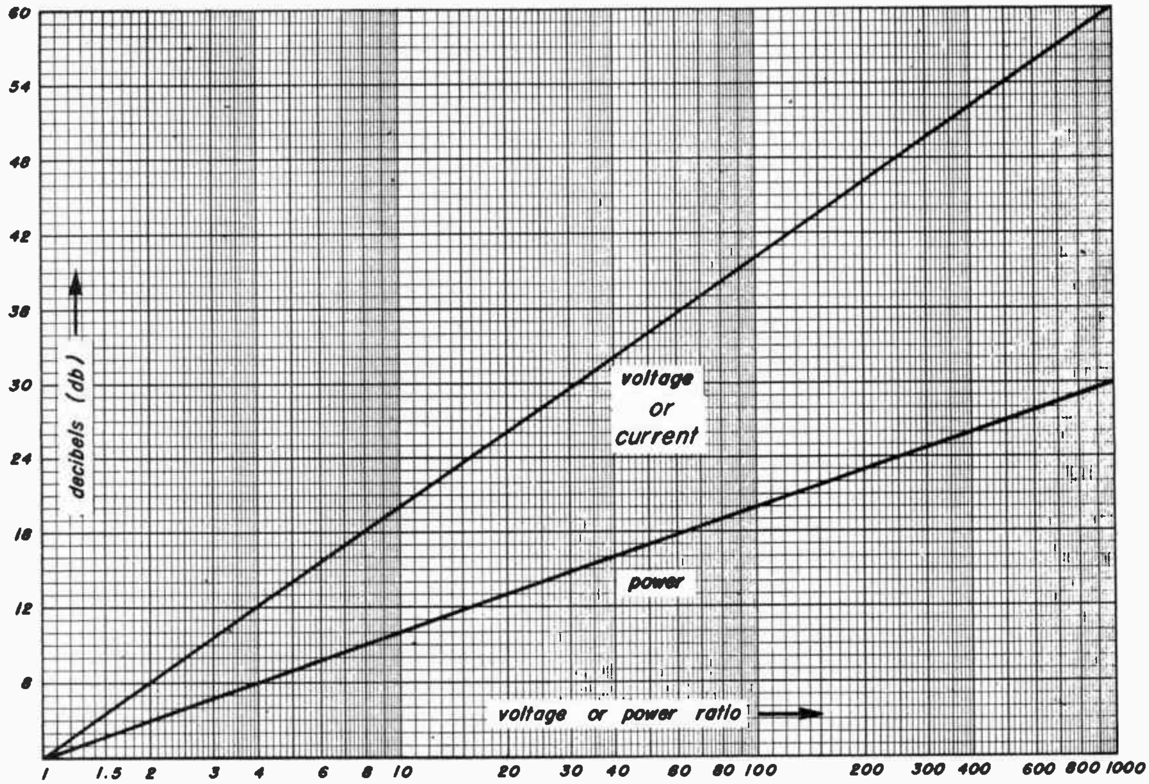

Fig. 20-9

quires a 0.1 volt signal at the input to produce a 10.0 volt signal across the output. This is a voltage ratio of 100 to 1, and tracing this line up finds the intersection with the voltage or current line at the 40 db level. It is important to remember, however, that voltage or current ratios are only valid when measured *at the same impedance value*. Otherwise the power ratio must be used in entering the graph.

For reference, here are the equations for voltage or current level comparisons in db, corresponding to the "voltage or current" line of the graph.

$$N_{db} = 20 \log_{10} \frac{E_2}{E_1} \qquad N_{db} = 20 \log_{10} \frac{I_2}{I_1}$$

Db Loss in Transmission Lines. – Again N_{db} represents the number of decibels gain or loss of power, E_1 and E_2 are the voltages, and I_1 and I_2 are the currents compared. You'll seldom have any need for the equations themselves, but it will sometimes be convenient to use the graph when considering gain or loss in db in television work. For instance, practical transmission lines are rated by the manufacturer for loss in db per hundred feet at various frequencies. With this loss figure for a given line, you can tell from the chart how much loss of signal strength there will be in a given length of line.

Consider a run of 200 foot of parallel wire line, which has a loss of about 1.25 db per hundred feet at 100 mc. If the antenna delivers a 1000 microvolt signal to the line at the upper end, we can enter the graph going to the right on the 2.5 db line and intersect the voltage line at a point a little less than half-way between the vertical 1.3 and 1.4 lines. Let's call it about 1.33. This means that the input signal (1000 microvolts) is about 1.33 times as strong as the signal delivered to the receiver. A little arithmetic shows that we therefore have about 750 microvolts left at the receiver input, still enough to give a usable picture. If a coaxial line were used in this run, we would be in trouble, for RG-59U has losses of 3.66 db per hundred feet. This 7.32 db loss would mean the input was about 2.3 times the output voltage (assuming proper impedance matching at both ends), which means only about 435 microvolts at the receiver input. This is near the lower level of usable signals in many locations.

Oddly enough, the response of the human ear to a change in the loudness of a sound corresponds roughly to db relationships. A change of 1 db in the level of a sound is about the smallest value the average person can detect readily. To make a sound seem twice as loud, we have to put in four times the power, or bring it up 6 db, as an acoustical engineer would say it.

TV Signal Levels. – In much practical television work, we'll also discuss signal level in microvolts, which of course means millionths of a volt. The actual signal level in microvolts at the receiver input is usually the governing factor in television reception, unless there is some outside noise or interference problem. This is true because the internal noise of production line receivers is reasonably low, and uniform from unit to unit, so a signal reasonably above this noise voltage will produce a satisfactory picture.

However, it is seldom necessary actually to measure the signal in microvolts, unless you are making a survey with a Survey Receiver, as described in Lesson 12. Ordinarily, you want to know only if the signal is satisfactory or unsatisfactory, and the picture tells you that better than anything else.

TERMINATED TRANSMISSION LINES

20-4. So far we have considered only the properties of transmission lines generally, or the action of a theoretical lossless infinite line. These ideas are useful in understanding the principles on which lines operate, but in practical work, it is necessary to go further and consider what happens when a load of some kind is connected to the ends of a transmission line of a finite length. After all, we want antenna transmission lines to accept energy *from* something (the antenna) and deliver it *to* something (the receiver) with minimum loss or distortion.

Line Terminated in Z_o. – In discussing the infinite line we saw how connecting a non-reactive load impedance Z_R, (pure resistance) equal to the surge impedance Z_0 across the end of a finite length of line left the voltage, current and impedance relationships along the line exactly the same as if the line were infinitely long. Specifically, when a lossless line is terminated in a load impedance, Z_R, equal to its characteristic impedance, voltage and current remain in phase, and the impedance seen looking into the line at any point along its length from source to load is a pure resistance equal to Z_0. We can show graphically the relationships between voltage, current and impedance along such a line like this:

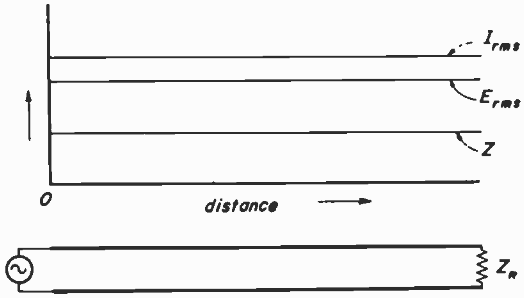

Fig. 20-10

Open-Circuited Line. – Now suppose we consider the same finite length of transmission line, this time terminated in an open circuit at the far (load) end. If we connect a generator of r-f current to the end nearest us, which we can call the sending end, we can send waves travelling along the line toward the open circuit load end, just as in the case of the resistive termination. But what happens when they reach the end? Let's see. An open circuit is an infinitely large impedance, and *an infinite impedance will draw zero current from a finite voltage source.* Since no current can flow, *no power can be dissipated.* We know that energy has to go somewhere, however, and this energy does....right back up the line toward the source.

Putting it another way, no current can flow at the end of an open circuited line, and when current ceases to flow, the magnetic field around the conductor collapses. However, in collapsing, the lines of force in the magnetic field cut across the conductor, generating a new voltage and current. The end of the line thus becomes in effect a source of electromagnetic waves, which flow in the only direction they can, back toward the original source. Thus we see that *the oncoming waves from the original source are reflected from the infinite impedance of the open circuit at the end, and return along the line,* without loss in the case of our theoretical lossless line. What effect this has on operation of the line we shall see in a moment, as soon as we consider the opposite condition to an open circuit termination.

Open and Short-Circuited Lines. – If we substitute for the infinite impedance termination a short circuit, which of course has zero impedance, current can flow through the terminating load as fast as the line can supply it, *but no voltage can be developed across the zero impedance.* This time the voltage can be said to "collapse", instead of the current. As a result, *total reflection again takes place,* just as in the case of the infinite impedance load termination. The only difference is in the phase relationship between voltage and current in the line, and the impedance of the line as seen at various points along its length.

Consider now the relative distribution of r-f voltage, current and impedance along the length of a line terminated in a short circuit. Actual values of voltage and current as read at any given point in a real line would of course depend on the source voltage, and the Z_0 of the line. *The impedance will look like a pure reactance,* and will be alternately inductive and capacitive, varying in sign and value as the measuring point is moved along the line away from the short circuit thus:

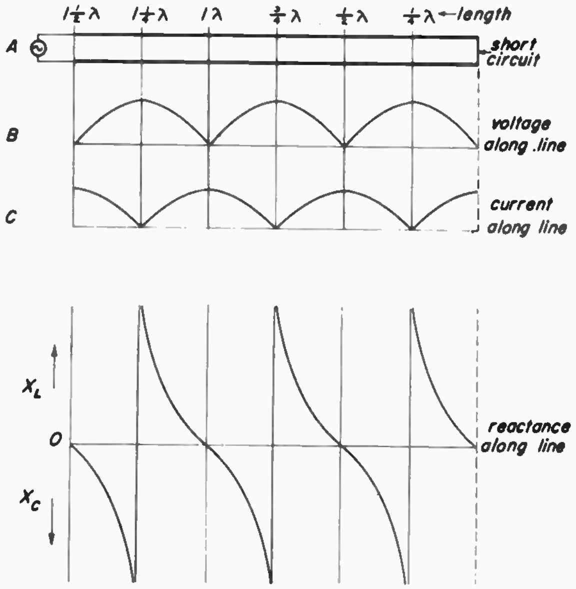

Fig. 20-11

The opposite case, with the line terminated in an open circuit, looks like Fig. 20-12.

This time there is a *voltage maximum* and *current minimum* at the end of the line, just the reverse of the short circuit condition. Note also certain other important facts. With the short circuit termination, the impedance rises steadily from zero at the termination to a progressively greater inductive reactance, until at a point one quarter wave length from the load end, the impedance looking into our theoretical lossless line becomes an infinite reactance. From a quarter wave to a half wave away, the impedance seen looking in toward the load is capacitive, and decreases until at the half wave point it again looks like a short circuit. In the open circuit case, opposite conditions exist, as can be seen from comparing Figures 20-11 and 20-12. This "repeating" characteristic existing at half wave points on the line is so important that we will take it up in much more detail later, but it is necessary now to consider the effect on the line of energy reflected from a termination other than the characteristic impedance, Z_0, which of course does not itself reflect energy.

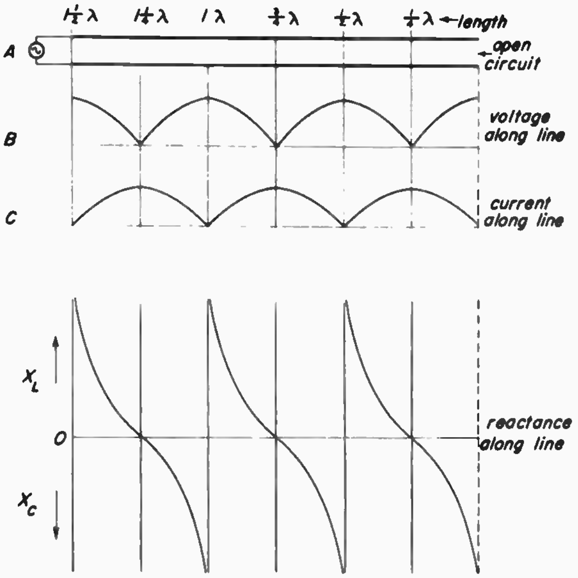

Fig. 20-12

Impedance Matching. – We have already considered the case in which Z_R, the load impedance, is equivalent to Z_0, the surge or characteristic impedance of the line. *This condition is called a perfect match between load and line,* and is usually the most desirable condition at a receiver input, although often not completely achieved in practice. *A load of any other impedance will result in an imperfect match,* and that part of the incident power not dissipated in the load will be reflected back up the line toward the source. A perfectly matched line is sometimes described as *flat,* or non-resonant, and one in which there is some or total reflection as being partly or fully resonant. These terms are used partly because a perfectly matched line responds equally well to a very wide band of frequencies, neglecting losses, while an imperfectly matched line shows varying distribution of voltage, current and impedance with change of frequency.

Reflection Coefficient. – Depending on the nature and value of the termination, there can be all degrees of reflection from none at all to complete reflection. The *ratio between the reflected voltage (or current) and the incident voltage (or current) supplied to the termination* from the source is called the *reflection coefficient,* and it can vary from 0.0 to 1.0. When there is reflection from the termination a new effect is produced as the reflected waves combine with the oncoming waves from the source. The waves passing in opposite directions alternately reinforce and cancel each other at any given observation point, so that a radio frequency rms-reading voltmeter slid along the line would show a regular series of alternate high and low voltage points at quarter wave intervals. This effect is called *standing waves,* because the pattern of high and low voltage points seems to stand still on the line.

Standing Wave Ratio. – *The ratio between maximum and minimum voltage is called the voltage standing wave ratio,* abbreviated VSWR, or more commonly just SWR. It is obtained numerically by dividing the maximum by the minimum voltage. Thus maximum and minimum values of 15 and 5 volts would mean a SWR of 3. The figure can also be expressed as a reciprocal fraction by dividing minimum by maximum to obtain 0.33, but for this course we will confine ourselves to the previous method. Derived in this way, the SWR can vary from 1.0 to infinity, depending on the reflection coefficient, as shown in Fig. 20-13.

Here VSWR is plotted on a logarithmic scale against reflection coefficient. In a theoretical lossless line, the SWR would reach infinity when the load dissipated no power at all, and thus produce a reflection coefficient of 1.0. *In practice of course, lines do have small but definite losses, so the standing wave ratio can never reach infinity, although in good lines it can go very high.*

Behavior of Unmatched Lines. – Consider now some other possible terminating loads for a transmission line. If we load the line with a pure resistance of a value other than Z_0, there will be reflection and standing waves, and the location

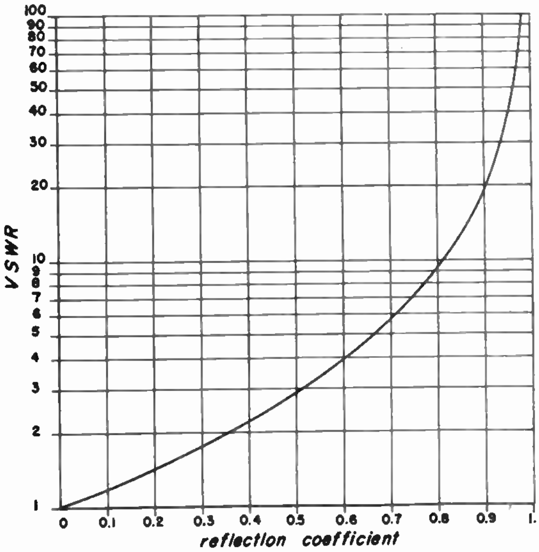

Fig. 20-13

of the high and low voltage points along the line will depend on whether Z_R, the load impedance, is greater or smaller than Z_0. If it is greater but not infinite, some power will be dissipated in it, and the reflected waves will be smaller in amplitude than the incident waves arriving from the sending end. The reflection coefficient will be less than 1.0, and the standing wave ratio will be lower than for a purely inductive or capacitive termination, which cannot dissipate any power. Here is a graphic plot of the effects of resistive loads both larger and smaller than Z_0:

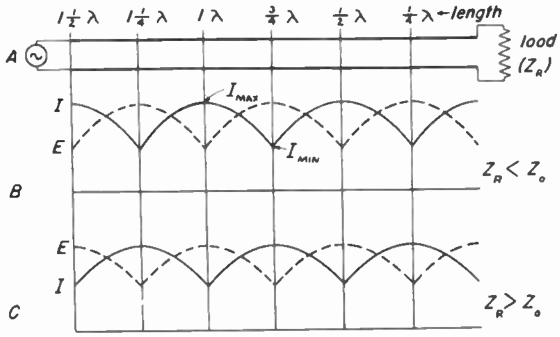

Fig. 20-14

When Z_R is less than Z_0, a current maximum occurs at Z_R, just as in the case of the short circuit, which can be regarded as an infinitely small impedance. In other words, *when Z_R is any value less than Z_0, a current maximum occurs at the load, along with a voltage minimum, and the current gets larger and the voltage smaller* *with decreasing Z_R.* And of course with Z_R larger than Z_o, there is a voltage maximum and current minimum at the load, with voltage increasing and current decreasing as Z_R is increased.

Effect of Reactive Termination. – We need now to consider two other kinds of loads. These are purely reactive loads, and loads combining reactance and resistance. *A purely reactive load can dissipate no power, hence the reflection coefficient will be 1.0, and the SWR will be infinite.* A Z_x (reactive impedance) infinitely large would pass no current, and hence would correspond to our old friend the open circuit case, and would produce the same effect. If we lower the value of the load reactance, some current will flow, and the voltage at the load will fall. But no power will be dissipated, so *the only difference from the open circuit condition will be a shift of the points of voltage maxima and minima along the line by a distance proportional to the drop in load reactance value.*

As the reactance is made smaller the current through it will increase, until when the reactance is infinitely small we have the short circuit condition again, with maximum current at the termination. The conditions on lines terminated in inductive and capacitive reactances equal in ohmic impedance to Z_o can be plotted like this:

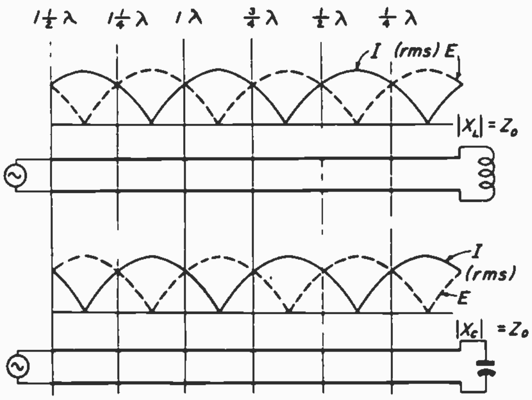

Fig. 20-15

Making either the inductance or capacity smaller will shift the standing wave pattern away from the termination along the line. And of course, making them larger will cause the pattern to shift toward the termination, the amount in each case being proportional to the change in value of the terminating reactance.

Terminations Desired in Television. – It would be possible to include here several formulas for calculating exact standing wave ratios for lines terminated in loads containing differing proportions of reactance and resistance, but such material would be of little practical value, for a very simple reason. *The terminating impedance at the receiving end of practical TV transmission lines is always made to be as nearly non-reactive and as near to the characteristic impedance value as is practicable.*

There are two principal reasons for this. The first is that, as we have just seen, *any termination other than in the non-reactive characteristic impedance will produce reflection and standing waves on the line, which are very likely to result in ghost images.* Such ghosts result from the part of the wave which is reflected from the receiver termination returning up the line to the antenna and being again reflected back down the line by any reactance or mismatch there. Such energy gets to the receiver later than the original wave by the amount of time required for the trip from receiver input to antenna and back, and *is often strong enough to produce a ghost image which will remain substantially unchanged, no matter how the antenna is oriented. A mismatch at either end alone is unlikely to cause this trouble, but with mismatch at both ends, trouble can usually be expected.*

The second reason is that termination in the characteristic impedance results in maximum transfer of power from line to load. While this is not always the optimum result, as we shall see in our consideration of practical antennas in this lesson, it is usually desirable, and the design of receiver input circuits generally takes this into consideration.

We can now sum up the more important facts about the operation of terminated transmission lines into a few general rules which will be very useful in television receiver installation and servicing work.

Summary. – Terminating any length of transmission line in a load Z_R equal to its characteristic impedance Z_o results in maximum transfer of power to Z_R, and prevents reflection and the formation of standing waves.

In a line terminated in an impedance other than Z_o, there will be reflections and standing waves.

The amount of energy reflected, the location of voltage and current loops and nodes, and the standing wave ratio depend on the reactance and resistance of Z_R, and their ratio to each other and to Z_O.

In most lines used in TV receiving, it is desired to have the load match the line impedance as exactly as possible, to minimize reflections and the ghost images these often produce. If there is a serious degree of mismatching between line and load, standing waves may make adjustment of the line length critical, particularly if some desired stations are weak in proportion to others.

RESONANT LINE SECTIONS

20-5. A section of transmission line one quarter of a wave length long at the resonant frequency, or any multiple of such a section, exhibits certain properties that are extremely useful in TV and other transmission line and antenna work. By use of an appropriate section properly terminated and connected, it is possible to minimize or eliminate interfering signals, match unequal impedances, isolate one circuit from another and do many things that would be very difficult if other means were employed. The basic phenomenon which makes this possible is the reflection of waves from an open or short circuit termination, in the way we have already studied. Sections of line used in this way are called *linear circuit elements*.

Right here a word of caution is necessary. Don't get into the habit of thinking of a "quarter-wave section" as having a definite, unvarying length in inches, like a yardstick. To know the length of a quarter-wave section of line, you must know the actual wave length of the radio wave you are talking about. Back in Lesson 6 we discussed the relationship between the frequency, wavelength, and propagation velocity of electromagnetic waves such as radio waves. The important thing for you to remember here is that a "quarter-wave section of line" is actually a quarter of a wave length long only at one certain frequency. If we increase the frequency of the applied wave, the section of line we were just considering will be *longer* than a quarter of a wave length at the new frequency. And of course, if the applied frequency is decreased, the opposite holds true.

Now consider a quarter wave section of transmission line terminated in a zero impedance short circuit. *A generator of r-f current at the resonant frequency connected across the input terminals will see a theoretically infinite impedance because of the effect of the returning waves reflected from the short circuit termination. If the termination is an open circuit, the generator will see a theoretical impedance of zero.*

This is true because the voltage and current phase relationship at the open circuit termination differs by 180° from that at a short circuit termination, so that *the reflected wave is now in phase with the generator output at its output terminals.*

Quarter Wave Sections. – Figures 20-16 and 20-17 shows the voltage, current and impedance relationships for both shorted and open circuited sections:

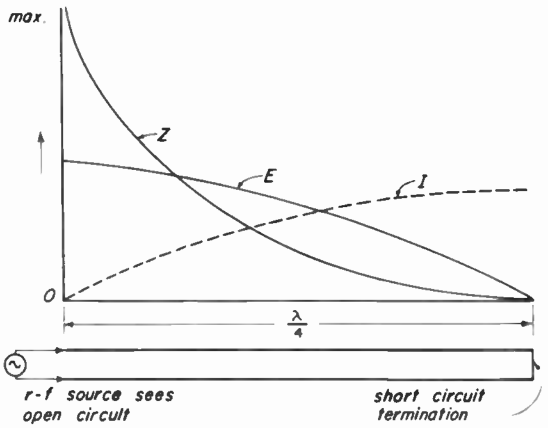

Fig. 20-16

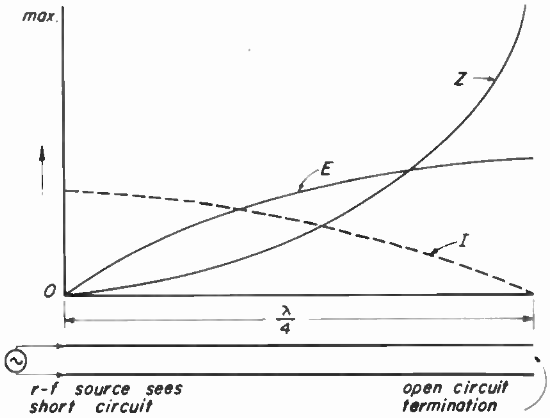

Fig. 20-17

It should be particularly noted that *a quarter wave section inverts the load impedance* as seen from the generator or sending end; that is, *a high impedance load termination looks like a low impedance to the generator, and vice versa.* The exact relationship involved is important in impedance matching problems, and will be taken up in detail in section 20-6.

Half Wave Sections. – It would seem logical that inserting a second quarter wave section between the generator and the sending end of the first section would *re*invert the impedance so that the generator would see an exact counterpart of the actual load impedance, and this is what actually happens in practice. Of course, two quarter wave sections added together make a half wave, so we can say that *a half wave section repeats the load, because the load impedance connected at one end is seen by the generator at the sending end without change.* Fig. 20-18 shows this situation for both open and short circuited terminations, together with the voltage, current and impedance distribution along the section.

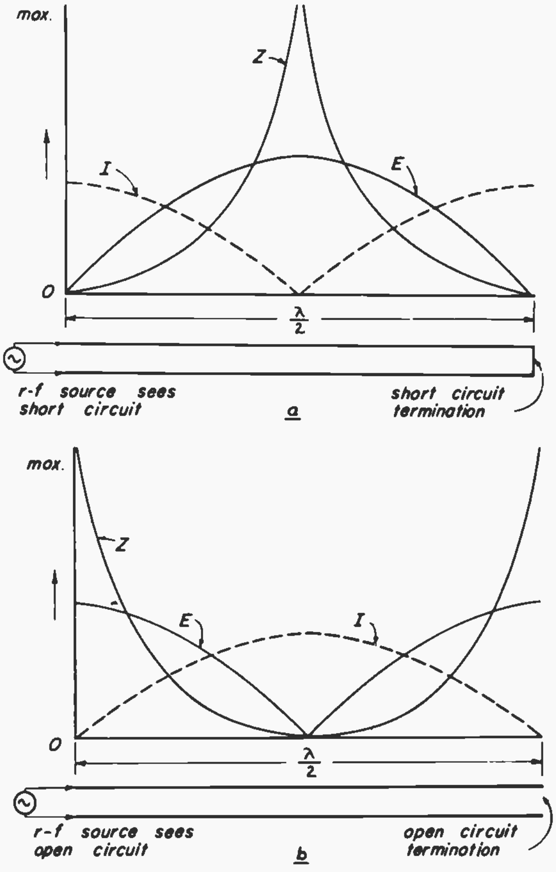

Fig. 20-18.

It is easy to see how the half wave section is actually two quarter wave sections connected together, by comparing either half of the drawing with Figures 20-16 and 20-17.

Considered in another way, the quarter and half wave sections can be regarded as simple tuned circuits of high Q and low loss. *An open circuited quarter wave section looks like a series resonant LC circuit,* and *a short circuited quarter wave looks like a parallel resonant one. The opposite is true for half wave sections,* as can be seen in Fig. 20-19.

Various different lengths of line sections are shown with their electrical equivalent circuits. The simplest rule to remember in considering the action of such linear circuit elements is that *a section of line an odd number of quarter waves long acts to invert the impedance of the load, as seen from the generator, and repeats the impedance of the load if it is an even number of quarter waves long.* Fig. 20-20 shows the result of these actions for various load impedances.

Other Lengths of Line. – The effects of sections of line shorter than a quarter wave are often useful, particularly when it is necessary to cancel the reactance of some device to prevent reflections. *An open circuited section less than a quarter wave long looks like a capacity at the sending end, and like an inductance if the load end is short circuited. The value of capacitance or inductance of a given section is directly related to the characteristic impedance of the line.* The Q of reactances thus made up of sections of transmission line is very high, which means the losses are low, which in turn means they can be used for balancing out unwanted opposite reactances, even in circuits where losses must be held to a minimum.

Sections between a quarter and half wave long also exhibit reactance, which from the sending end will look exactly *opposite* to that of a similarly terminated section *shorter* than a quarter wave. This will not be confusing if we think of such a section as actually being *a section shorter than a quarter wave,* such as was discussed in the last paragraph, *coupled to the generator through a quarter wave section, which of course inverts the impedance of the short section as seen at the sending end.* These reactive effects of sections shorter or longer than a quarter wave, and variously terminated, are shown in Fig. 20-19.

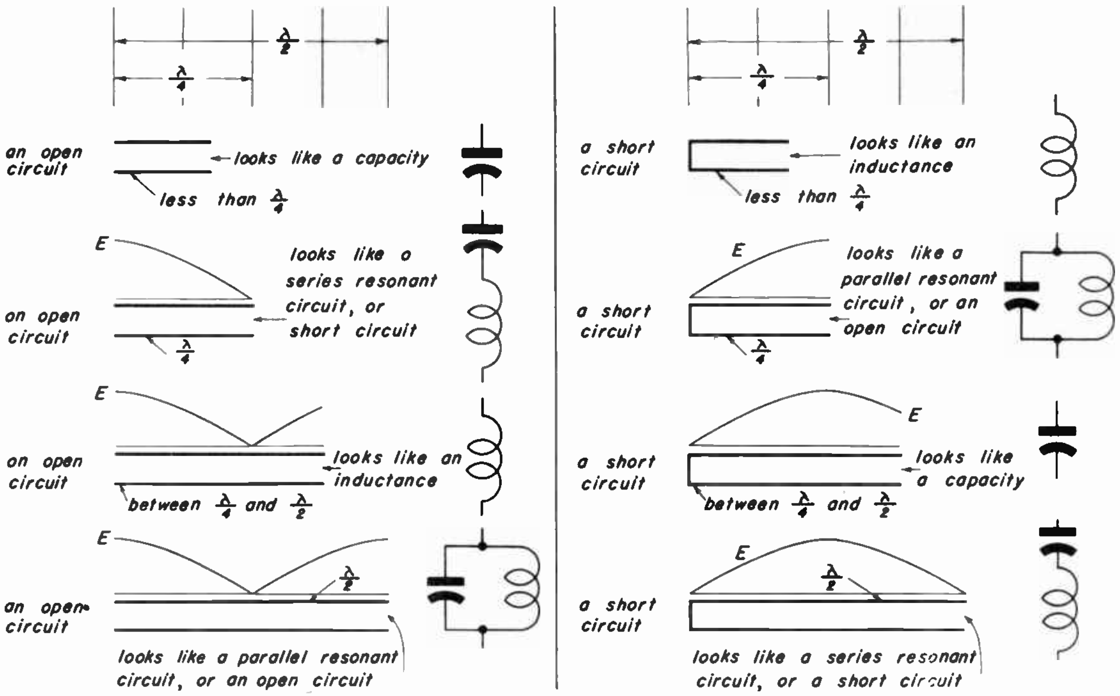

Fig. 20-19

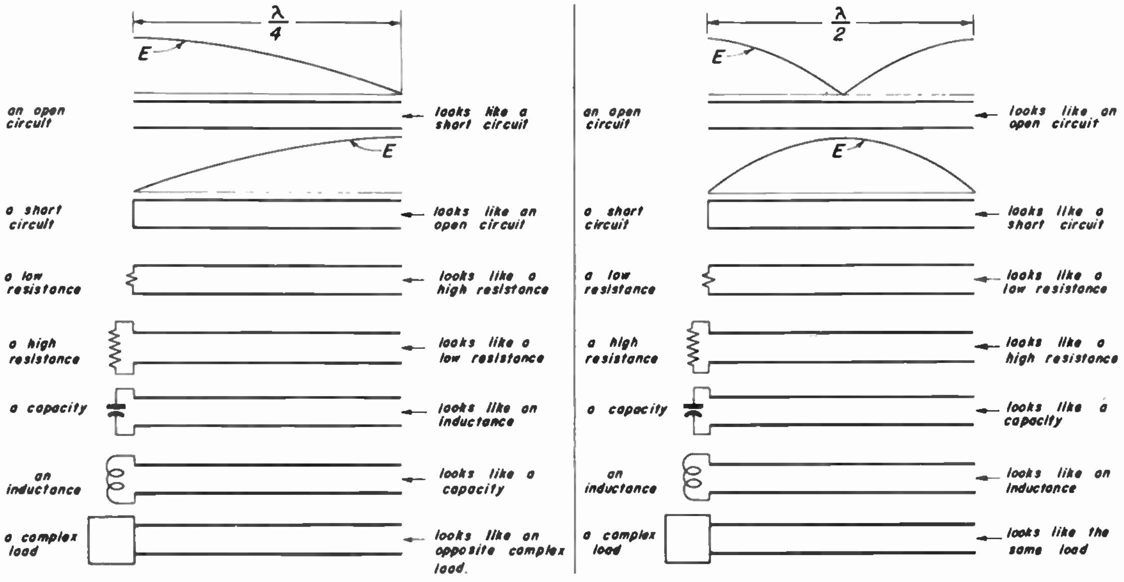

Fig. 20-20

IMPEDANCE MATCHING

20-6. Matching impedances in television antenna systems is necessary in order (1) to avoid reflections and ghost images, (2) to achieve optimum signal voltage at the receiver input, and (3) to connect multiple loads to a single line, as when several receivers are to operate from the same antenna. We have already seen that only a perfect impedance match will completely prevent reflections and the troubles that arise from them. In practical terms, however, *it is seldom possible or necessary to eliminate reflections completely.* Theoretically perfect transmission lines, antennas and receiver inputs might make it possible to come fairly close, but there are stray sources of unbalance which operate to make such perfectionism impracticable, to say nothing of the difficulties of getting a good match over a band of frequencies as wide as those used in television.

The engineer or technician faced with a matching problem does his best to get the standing wave ratio as low as possible, and trusts to the high ratio of desired to undesired signal to prevent ghost troubles. *This is feasible only if the standing wave ratio on the line is held to a minimum on every channel to be received*, and this means careful and intelligent work on the part of the installing and servicing technician, for the problem is not as simple as it seems at first thought. If all antennas, receivers and transmission lines were made with the same feedpoint impedance, if there was only one TV station in each area, if there were no such things as stray capacity and unbalance to ground, the technician's brow would know less wrinkles. But alas! All these and several other factors enter the problem with big, muddy feet, and must be dealt with in some fashion.

Perfect Match Not Necessary. – Contrary to much current belief among radio servicemen, however, it is *not* always either necessary or desirable to have a perfect impedance match between the antenna and transmission line. The feed point impedance of many antennas is different from that of the receiver input circuit, and may also be different from that of any available transmission line. Furthermore, the source impedance of the antenna may vary widely over the band of frequencies it is expected to accept, which would make securing a match for all frequencies a formidable problem indeed. An antenna array made up of dipole, reflector and director may have an impedance which varies from as little as 10 ohms to as much as 100 ohms or so over the band of frequencies to be received, with considerable reactance at frequencies far removed.

Fortunately it is not necessary to match this source impedance perfectly, *if the match from line to receiver is reasonably good over the entire band.* Instead, ordinary 300 ohm paralell wire line can be used if the receiver has a 300 ohm input, and operation of the system will be little affected by the mismatch from antenna to line. This is true because *as long as the load end of the line is terminated in its characteristic impedance*, there will be no reflection, and all the power (neglecting the small losses in practical lines) delivered to the line by the antenna will be passed on to the receiver. If, however, there is a serious mismatch at *both* ends of the line, some of the energy delivered to the receiver input will be reflected back toward the receiver again because of the mismatch, and will arrive at the input later than the original signal by the time taken for the round trip. The result is of course a ghost image *which cannot be wiped out by reorienting the antenna, or any similar measures.*

As for voltage output from the antenna, it will actually be slightly *greater* when operating into the 300 ohm line, because *the higher impedance loads the antenna less than would a line of, say, 72 ohms Z_o*. Of course, the *power* transferred to the receiver input is *less*, but *the receiver is essentially a voltage operated rather than a power operated device* anyhow. Then too, most antennas show a rising internal impedance as the frequency departs from true resonance, as mentioned before, which means that the match at the antenna end will get better instead of worse as the edges of the band are approached.

To sum up then, while it is very important to secure as good a match at the receiver end as possible, it is not always necessary at the antenna end, and may in some cases be less effective for band-wide reception. In any case, however, only *one* serious mismatch in the antenna-line-receiver system can be tolerated, if ghosts due to multiple reflection are to be avoided.

Use of Series-Connected Quarter Wave Line Sections. – We come now to some practical methods and devices for matching impedances in TV antenna systems. One of the most effective gadgets for matching impedances over a relatively narrow range of frequencies is a section of transmission line a quarter wave length long at the center frequency of the band to be passed. Bearing in mind the inverting effect of a quarter wave section connected between a load and source of current, it seems obvious that such a section can be used to change impedance when connected like this:

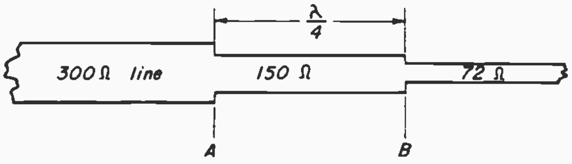

Fig. 20-21

Looking toward point B from point A, the impedance seen must *look larger* than the actual 72 ohms connected, because of the inverting effect of the quarter wave line. Conversely, the 300 ohms connected at point A must *look smaller* than its actual value when considered looking to the left from point B, bearing in mind in both cases that the characteristic impedance of the quarter wave section is 150 ohms. A quarter wave section of transmission used in this way is often called a linear transformer, because it can "transform" an impedance seen at one end to a different value, as seen at the opposite end. It is also sometimes called a Q-section.

The actual relationship between the impedance at the ends of a quarter wave section and the characteristic impedance Z_o of the line must be as shown in the following equation, if the match

$$(Z_o)^2 = Z_S Z_R$$

between source and load is to be perfect. Z_o is of course the characteristic impedance of the transmission line used in making the quarter wave section, Z_S is the source or sending end impedance, and Z_R is the load impedance.

Resistance Networks for Impedance Matching. – Another way in which impedances can be matched is by use of networks of resistors so chosen that the correct impedance is presented to the source. This method has many advantages. Resistors are relatively inexpensive, require little space, are fairly rugged mechanically, are relatively nonreactive and insensitive to frequency change, and can be had in almost any value required. Not all types are suitable, of course, because of reactive effects, particularly in the carbon composition and wire wound units. But the *filament and metallized film* types show negligible change of characteristics up to 250 mc, and are used extensively for this and other reasons. However, *care must be taken in mounting and wiring impedance matching resistor networks*. Spacing must be such that stray capacity to ground or the other side of the line is not excessive, joints must be well soldered, and any tape or other dielectric material introduced into the immediate field of the conductors should have low losses at TV frequencies, and low moisture absorption. If this last point is forgotten, trouble may develop after a few weeks or months because of losses due to moisture absorption. That means a service call which could have been avoided, and a needless expense which will probably have to be borne by your company.

In spite of its advantages, the use of resistors as impedance matching devices is not the whole answer to the problem. Unfortunately the insertion loss of such networks is high, which means that a considerable part of the desired signal is wasted in heating the resistors, instead of giving out with Milton Berle on the kinescope. However, *in the areas where the signal level is high enough to sustain the insertion loss without falling too near the noise level, the use of resistor networks is relatively simple and convenient.*

Signal-to-Noise Ratio. – Before taking up specific examples of the use of resistive matching networks, a little clarification of the relationship between receiver sensitivity and signal level versus noise level is necessary. Contrary to much popular belief, even among service technicians, getting a satisfactory signal is not just a matter of adding more cascaded amplifier stages to provide more gain. Instead, *there is a lower limit to the strength of a signal which will just barely provide a satisfactory picture*, because the desired signal has to compete with noise voltages present at the grid of the first r-f amplifier tube. There are several separate sources for this noise, including the receiver input circuit itself. For now, it is enough to remember that in a good receiver the total noise level will be low, but always present. Naturally the television signal voltage at the same grid must be strong enough to override the noise completely, or the picture will present a fuzzy "snowstorm" effect, and may drop out of synchronism or exhibit other defects.

In practice it is usually necessary for the picture signal to be about 40 db above the noise level to provide a satisfactory picture. A radiated signal level of about 500 microvolts per meter at the antenna site will usually be enough to insure this 40 db signal-over-noise margin.

Resistor Networks as Attenuators. – And oddly enough, as we learned in Lesson 10, it is also possible for the received signal to be too strong, in which case reception will also be unsatisfactory unless corrective measures are taken. In this case resistive networks can be used to attenuate the signal with or without making any change in impedance, as we shall see in Sec. 20-8. The important thing to remember just now is that *there is a definite range of signal level on* *which the receiver can operate successfully, and that the signal level present at the antenna output terminals has a strong influence on the use of resistive networks for matching impedances.*

Now consider a hypothetical case where a multi-element antenna with a 300 ohm output impedance feeding a 300 ohm twin conductor line is providing a signal of 5000 microvolts at the end of the transmission line, according to measurements made with a Survey Meter, as explained in Lesson 12. The receiver to be fed from this antenna has a 72 ohm input impedance with one side grounded to the chassis. It is known that the receiver requires a signal of at least 500 microvolts at the input to provide a satisfactory picture. Can these two different impedances be matched with resistive elements without introducing too much attenuation?

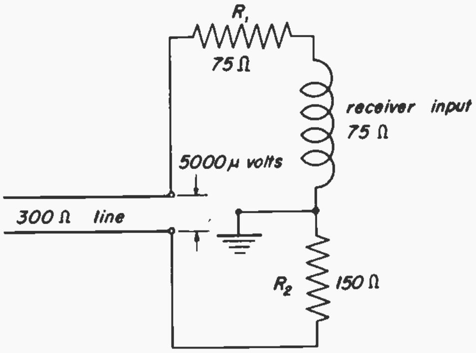

Fig. 20-22

Let's see. Fig. 20-22 shows the simplest possible configuration which will terminate the line in an impedance balanced to ground, and equal to its characteristic impedance. These two points are likely to be very important, especially when a multi-element antenna is used, as feeding such an antenna into an incorrect or unbalanced impedance is likely to seriously alter its performance. The line looks into an impedance consisting of R_1, the 75 ohm receiver input impedance, and R_2 in series, which totals 300 ohms. The ground point is at the center of the impedance value, keeping the balance to ground correct. But, will the signal voltage actually across the receiver impedance be adequate? A glance at the diagram reveals that it will actually be one quarter of the total voltage (5000 microvolts) across the terminating impedance, and this amounts to 1250 microvolts, more than adequate for satisfactory operation.

Note that it is not essential that the receiver look into its own internal impedance in order to function properly. The source of the waves in the system must look into its matching impedance if there is to be no reflection. In this case, the antenna is the source. Actually, the receiver is looking at an impedance of 525 ohms, made up of R_1, the 300 ohm Z_0 of the transmission line, and R_2 in series. This mismatch does no harm, *because the receiver itself is not ordinarily a source of radio waves.*

Matching an Unbalanced Receiver Input. – Another type of impedance matching problem is presented in Fig. 20-23.

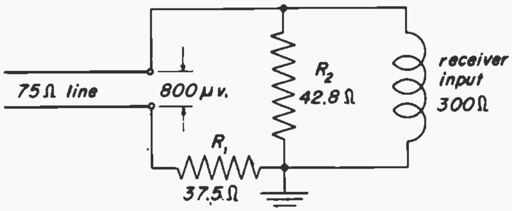

Fig. 20-23

In this example, the transmission line impedance is 75 ohms balanced to ground, the receiver input impedance is 300 ohms, with one side grounded, and the signal level at the end of the transmission line is 800 microvolts. Bearing in mind that the line must terminate in an impedance near 75 ohms with a ground at its center, it is obvious that we must choose a resistor of half that value for R_1. (This is a non-standard value, and would have to be approximated, probably with two 75 ohm quarter or half watt resistors in parallel.) The other half of the terminating impedance must also equal about 37.5 ohms, which means we must parallel the 300 ohm receiver impedance with a resistor of a suitable value. The equation for computing the resistance of paralleled resistors can be used here, since the input impedance of the receiver is essentially resistive. For two resistors only, (as you should recall from Lesson 16) the form is: R, the parallel resistance, equals the product of the two resistors divided by their sum, thus:

$$R = \frac{R_1 R_2}{R_1 + R_2}$$

Substituting the known values of 37.5 ohms for R, and 300 ohms for either R_1 or R_2, and the unknown symbol X for the other "R", the equation solves as follows:

$$\begin{aligned} 37.5 &= \frac{300(X)}{300+X} \\ 37.5(300+X) &= 300X \\ 11250+37.5X &= 300X \\ 11250 &= 262.5X \\ 42.8 &= X \end{aligned}$$

A resistor as near in value to 42.8 ohms as possible connected as R_2 in the circuit of Figure 20-23 will make the terminating impedance correct, but what has happened to our 800 microvolt signal? Obviously only half of it can appear across the combined impedance of R_2 and the receiver input in parallel, and this 400 microvolts is below the required signal for a satisfactory picture. In this case, we must either do something to raise the signal level available at the end of the transmission line, or choose an impedance matching method offering less attenuation.

Approximate Values Permissible. – Some further general points to remember in connection with the use of resistors for impedance matching should be noted. It is not necessary that *exact* values of resistors be used, as a difference of as much as ten or fifteen per cent will not seriously affect the operation in most cases. In all the principles so far considered in this lesson, we have assumed that lines and sections were lossless, and that there were no unbalances to ground in any part of the system. In practice, this is never the case, and *the effects of the small but nevertheless noticeable losses in lines, and unbalanced capacitance from line and antenna to ground are such as to mask the effects of reasonable errors in actual resistor values used.* Such effects of course act to influence *any* system of coupling and impedance matching, so in practical work it is not necessary to split hairs, or ohms either, for that matter. This does not mean that a good technician can afford to be careless or or sloppy, nor does it mean that considerable effort should not be made so to locate antennas and dress transmission lines that unbalance is kept to a minimum. But *it does allow a little leeway in impedance tolerances, which permits faster work in most cases.*

The Matching Transformer. – The most effective impedance matching device for use where several stations widely separated in frequency are to be received, and little attenuation of the signal can be tolerated, is the matching transformer illustrated in Fig. 20-24. This transformer has three windings mounted on a common form. It is designed specifically to match a low impedance unbalanced coaxial transmission line to a balanced 300-ohm receiver input, as commonly found in commercial TV receivers.

A schematic diagram of such a unit installed between a 50 ohm transmission line and a 300 ohm balanced receiver input looks like Fig. 20-24.

The number of turns in each coil and the coupling between the windings is so arranged that the impedance seen between terminal 1 and the common connection 2,4,6,8 is 50 ohms, and that between terminals 5 and 7 is 300 ohms. The losses in such a transformer are low, the voltage output being about 0.9 of the voltage input on the low band and about 0.7 on the high band. *This means that they can be used in applications where the signal level is very near the lowest usable value.*

The impedance values of the units are so accurate that the standing wave ratio produced by their insertion into a flat line is only 1.1 to 1. Since ratios as high as 3 or 4 to 1 can often be tolerated, this ratio is entirely negligible. Consequently, in many applications the use of matching transformers and coaxial line is justified, as they often make reception possible when other means of coupling antenna to receiver are inadequate.

USES OF TRANSMISSION LINE STUBS

20-7. We have already considered the use of quarter wave sections of transmission line as linear transformers, which are sometimes called Q sections. There are two other ways in which you are likely to use stubs, both considerably more common than Q sections, and hence more important to you in practical work. These are for (1) tuning out reactance to reduce standing waves, and (2) reducing the strength of interference or overly strong television signals.

Stubs For Reactance Cancellation. – We saw earlier how a section of line less than a quarter wave long at the frequency under discussion could be made to look like an inductance or capacitance at its input end. With the opposite end shorted, the input looks inductive, and if it is left open, the input looks capacitive. Now, we know that if a transmission line is not terminated with a load which is a pure resistance, Z_R, equal to the Z_0 of the line, some of the r-f energy put into the line will be reflected back from the load toward the source. This will produce standing

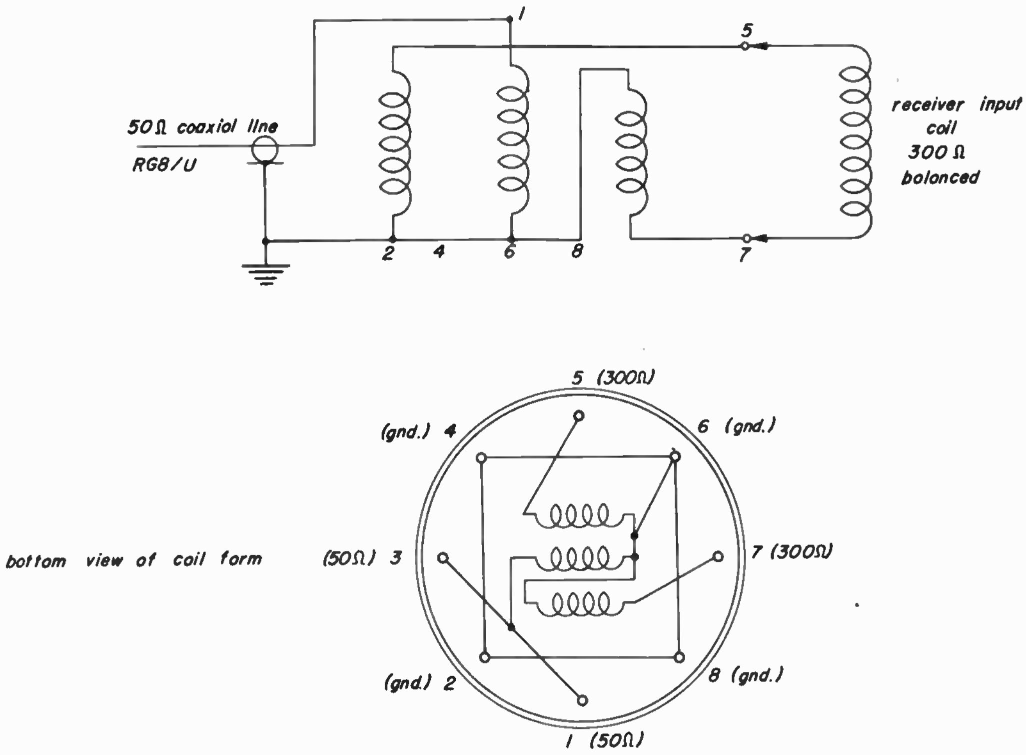

Fig. 20-24

waves on the line, and if there is reflection from the source end of the line as well, the energy coming back from there will result in still another set of standing waves. You can readily see that the situation can get pretty complicated.

Unfortunately, this is not just something that happens in theory, either. In practical television work, any serious reflection from the receiver input may result in a situation just like what was described in the last paragraph, because it is almost impossible to design an antenna that looks like a pure resistance of the proper value to match the line Z_0 at all frequencies within the television bands. This means that signal energy reflected from the receiver input back to the antenna will be reflected there *again*, back down the line to the receiver. If the line is long enough, the reflected part of the signal will arrive back at the receiver input enough later than the original signal to produce a ghost image. If the reflected signal is pretty strong as compared to the original signal, there can be a whole series of ghosts displaced at equal intervals to the right of the main image, each one being progressively weaker than the last.

Components of Receiver Input Impedance. – In many earlier model TV receivers, the input circuit was designed to provide as good a match to the line as could reasonably be obtained without resorting to a separate tuned input circuit for each channel. Even so, the impedance match in such sets is better at some frequencies than others, and that is where stubs are useful. A properly adjusted stub can be connected across the line at the receiver input (or in fact, at any convenient point), to cancel remaining reactive effects when they are troublesome.

Now, a complete analysis of all the possible conditions that can exist at the receiver input would get pretty complicated, for the apparent input impedance is likely to look quite different at different frequencies. In practical receivers it is usually a fairly pure resistance at some frequency within the television bands. This resistance is pretty close to the Z_0 of the line, and thus makes a good match, resulting in very low reflection at that frequency. Also, the Q of the input circuit is deliberately kept rather low, with the result that over a rather broad band of frequencies near the one where pure resistance is seen, it continues to look mostly resistive, and presents a reasonable impedance match to the line. No trouble. However, at some frequencies far removed from the "best" frequency, it is possible for the input to look rather reactive, being either inductive or capacitive, as the incoming signal is below or above the "best" frequency, which is actually the frequency at which the input is broadly resonant.

In some cases this effect may be great enough to make reception poor, particularly if the signal from the station on the channel in question is weak. A stub can be used here to improve reception on the bad station, and fortunately we don't need a laboratory full of instruments to find out whether the receiver input is inductive or capacitive. You don't actually need to know, for all you need do is try a stub cut about two thirds or three quarters of a quarter wave long connected across the receiver input. Shorting or opening the free end of the stub will give you the effect of shunt inductance or capacitance at the receiver input, and pruning the length of the stub will give you more or less of each. With this sort of cut and try you can often improve reception on the weak station to a point where it is acceptable.

Naturally you are not getting something for nothing here. What you are doing is tuning the receiver input higher or lower, thus making its response to the weak station change somewhat. This means that the response to the other stations will change somewhat as well, and you must check across the other channels to see whether you are losing more signal on any other stations than you can afford. In practice, it is often possible to reach a compromise adjustment of the stub that brings in the weak station, but does not weaken the others too much.

Reactance Along Transmission Line. – The theory underlying this use of stubs is quite simple when you think back to what we were discussing earlier about the action of transmission lines. We know that if the load end of any line is terminated in a load impedance Z_S that is not a pure resistance (has inductance or capacitance as well as resistance) or is not the same value of resistance as the Z_o of the line, there will be reflection and standing waves. We also know that at some one point in each quarter wave length of line as we move away from the load, there will be a place where the resistive part of the impedance seen looking into the line toward the load will be equal to the Z_o of the line. The trouble is that there will be some nasty old reactance hanging around that same point, *even though the load be a pure resistance, if the value of the load resistance does not match the line Z_o.* The reactance in this latter case may be only *apparent,* but it has the same effect as would a real reactance connected across an exactly matching load resistance at the point in the line we are considering.

Since it acts the same as a real reactance, we can get rid of it in the same way, by connecting a suitable stub across the line at that point. The stub we use must present an equal and opposite reactance, which we can achieve by cut and try methods, with the result shown in Fig. 20-25.

In most later model TV receivers, the input circuit is individually tuned to each channel, and as a result the problem of mismatching is practically eliminated in normal installations.

Stubs as Trap Circuits. – Other stubs are sometimes used to weaken or eliminate specific signals present at the receiver input when for some reason or other this is necessary. As an example, consider a set owner living very near the transmitter antenna of a station on, say Channel 5, who occasionally wishes to enjoy the

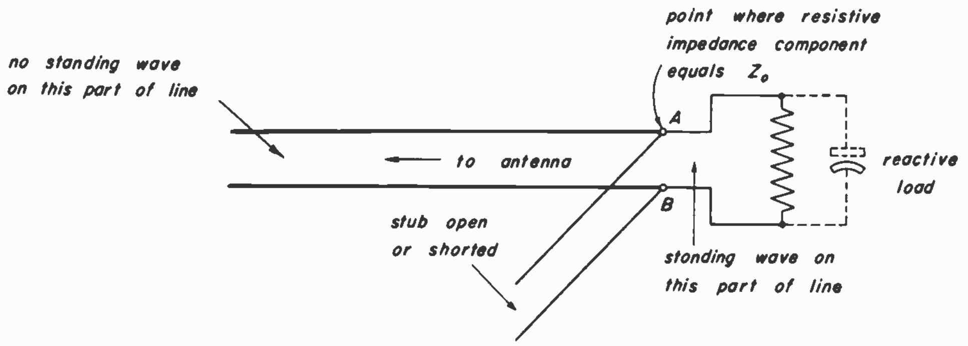

Fig. 20-25

programs of stations further away, transmitting on Channels 4 and 6. Often the Channel 5 station will be so strong as to overdrive the input stage of his receiver when it is tuned anywhere near to Channel 5, completely preventing reception of Channels 4 and 6. To further aggravate the matter, it is quite likely that Channel 5 itself will show a very bad picture, because the receiver is badly blocked by the excessive signal level.

In this case a transmission line stub cut a quarter wave long at the Channel 5 frequency should be tried, connected across the receiver antenna terminals, as in Fig. 20-26.

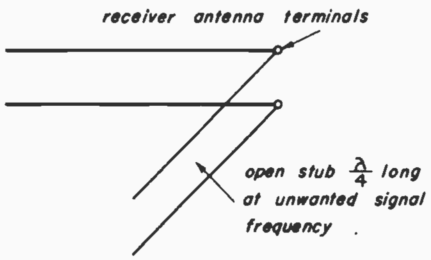

Fig. 20-26

Note that the end of the stub is *not* shorted. In this condition it looks like a series resonant circuit, and offers a very low impedance at the frequency at which it is a quarter wave long. Since this low impedance is shunted across the receiver input, the Channel 5 signal voltage actually impressed on the first tube grid will be greatly reduced. This method can be applied to reduce any interfering signal if its frequency is known, and does not change too much. However, the stub must be carefully "pruned" to exactly the right length for maximum attenuation of the undesired signal *while it is in the exact physical position it will finally occupy*. Otherwise, the best result may not be obtained, because of subsequent detuning of the stub in mounting it.

In practical work, it has been found that the use of *half*-wave stubs with the end not connected to the receiver shortcircuited is generally more satisfactory, because it is much less easily detuned by surrounding objects. Electrically the effect is the same, as would be expected from theory.

It must not be thought that any of the uses of stubs described here is a sure cure-all for interference or strong-signal problems. No single measure can be relied on to solve such problems, as conditions vary greatly from case to case, but these uses of stubs as series resonant traps are worth trying.

ATTENUATION DEVICES

20-8. It is sometimes necessary to reduce the level of all signals reaching the receiver input by a definite amount, in order to provide satisfactory reception. This condition can easily occur when the receiver is located quite near the transmitting antennas of the TV broadcast stations to be received. At first thought it might seem that using a less efficient antenna would solve the problem, and indeed in a few cases this alone may reduce the signals enough to prevent overdriving the receiver input. However, it may well be that reflections in the area make it necessary to use efficient directional antennas to avoid ghost difficulties, in which case it is necessary to use other methods of attenuating the signals applied to the receiver input.

As we have already seen, practical transmission lines themselves introduce some attenuation, but this is seldom very large, and in any case the use of extra lengths of transmission line to attenuate the signal would be both expensive and impractical. The most convenient and practical method of introducing a known, fixed amount of loss for all signals reaching the receiver through the line is by means of resistor networks known as *attenuation* or *loss pads*.

Design of Attenuation Pads. – Formulas for calculating the proper resistor values for useful amounts of loss are available in various engineering handbooks. In fact, a great number of different types of pads are possible, but we need concern ourselves here only with the few formulas that will really be of some use in practical applications. This means almost entirely 300 ohm balanced lines or 72 ohm unbalanced lines. The resistor configurations most useful with these lines are shown here.

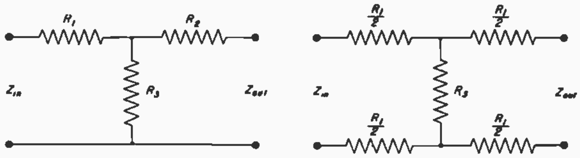

Z_{in} equal to Z_{out}

Fig. 20-27

The formulas for the resistors in both the pads are the same, and can be written like this.

$$R_3 = \frac{2Z\sqrt{N}}{N-1}$$

$$R_2 = R_1 = Z\frac{\sqrt{N}-1}{\sqrt{N}+1}$$

Here Z is the impedance in and out of the pad in ohms, and N is the ratio of power in, to power out. To calculate a pad with 6 db loss for 300 ohm line, (voltage ratio of 2 to 1, or power ratio of 4 to 1) substitute values as follows:

$$R_2 = \frac{2(300)\sqrt{4}}{4-1} = \frac{1200}{3} = 400\Omega$$

$$R_1 = 300\frac{\sqrt{4}-1}{\sqrt{4}+1} = 300\tfrac{1}{3} = 100\Omega$$

This 6 db loss pad is one of the most useful, as it cuts the signal voltage to just one half the original value, and this usually proves sufficient, excepting in the very strongest signal areas. And of course, resistor pads giving greater amounts of loss can be designed when they are required, using the same formulas. It's worth remembering that, in practical cases, it is not necessary to have exactly the right resistor values in such pads. Using the nearest standard resistors to the calculated value will be close enough, as the manufacturers of such components have agreed on a sequence of resistor values that permits approximating any desired value close enough for practical purposes. Incidentally, this practice is quite general throughout the radio and electronic industries, regarding components of all sorts. The Radio Manufacturer's Association (RMA) standards are universally used for resistors, capacitors, tubes, and many other components, to avoid the confusion and waste that would otherwise result.

Uses of Loss Pads. – More specific information on the uses of resistive networks for impedance matching, strong signal reduction, and other purposes has been given in Lessons 10, 13, and elsewhere in this course. In general, it will be found that a few standard pad values, such as 3 db, 6 db, and 9 db loss will handle most of the strong signal problems, and a few of these can be kept handy in the truck. A table of resistance values for these pads, for use with both 50 and 300 ohm line, is given in Table A. These are not the computed values, but the nearest RMA standard values to them.

TABLE A

Db Loss	*Voltage Ratio*	*Power Ratio*	*Line Impedance (ohms)*	*R_1 (ohms)*	*R_2 (ohms)*
3	1.41	2	72	12	160
			300	47	820
6	2.00	4	72	24	100
			300	100	390
9	2.83	8	72	33	62
			300	150	270
12	4.00	16	72	43	39
			300	180	150

It is easier to make up such pads in the shop than out at a location, and of course, there's no point in making things any tougher than they have to be. Incidentally, don't forget that, useful as pads are, they reduce *all* signals in the same proportion, and cannot be used to discriminate against one channel, and not another.

PRACTICAL TRANSMISSION LINES

20-9. In discussing transmission lines so far, we have considered only theoretical lossless lines, in order to learn the principles which control their action. With this knowledge firmly in our grip, we can now have a look at the various kinds of practical transmission lines actually used in television receiving installations.

Effect of Resistance in Actual Lines. – In studying practical transmission lines, one very general fact which affects the action of *all* practical lines is that, unlike the theoretical lossless lines we have been considering, there are always some losses of energy in the line itself. This energy appears as heat developed in the resistance of the conductors and in the dielectric, and in almost every practical use of transmission lines is small enough to be neglected entirely. Indeed, in receiving installations, it would be extremely hard to measure such a small amount of heat energy. In fact, for most actual receiving applications, the only serious effect of the losses in the transmission line is the reduction of signal voltage available at the receiver input terminals to operate it.

There is one other effect which shows up in practical lines as compared to theoretical ones. Because there *are* finite losses in the line, and because the dielectric constant of the line insulation is usually considerably greater than that of free space, which has a value of 1.0, the waves do not travel as fast in a transmission line as they do in free space. The difference in speed is expressed as a decimal fraction of the free space velocity, and it is called the Propagation Velocity Factor (PVF) of the line, or often simply the velocity factor.

Parallel Wire Line. – By far the most commonly used type of transmission line is the sort made up of two parallel conductors imbedded in a strip of semi-flexible solid dielectric material, which holds them together at the proper spacing. This type is made by a number of manufacturers, but the entire industry has more or less standardized on lines of certain characteristic impedances and power handling capabilities, and the materials employed by all are quite similar. The parallel wire line used commonly in TV installations has a characteristic impedance of 300 ohms.

The conductors are copper wire, stranded for reasonable flexibility, and the dielectric is almost invariably some form of polyethylene, which is about the only material now known having the requisite combination of electrical and mechanical properties, which can be produced at reasonable cost. The normally transparent polyethylene is often colored dark brown by addition of an anti-oxidation agent in the form of a dye, to prevent deterioration by the oxygen of the air and the action of sunlight. Parallel two conductor line of this type is made in standard characteristic impedances of 75, 150, and 300 ohms, and has loss and velocity factors as shown in Table B.

TABLE B

		Attenuation in db per hundred feet.			
Z_o	*PVF**	*50mc*	*90mc*	*170mc*	*200mc*
75	0.68	2.3	3.6	5.7	8.4
150	0.77	1.5	2.5	4.0	4.6
300	0.83	1.05	1.5	2.1	2.3
300**	0.83	0.85	1.2	1.7	1.82

*PVF, Propagation Velocity Factor, is the decimal fraction by which the free space velocity of a radio wave must be multiplied to find the velocity in the line. It may also be stated as a percentage.

**Tubular receiving type.

Another somewhat similar line is now available, with considerably modified characteristics. In it the conductors are imbedded diametrically opposite each other in the wall of a round polyethylene tube. It is less subject to flapping and damage by the wind than regular twin conductor line, and is less subject to change of properties in wet weather, as moisture on the surface is kept out of the space directly between the wires.

Coaxial Line. – Another commonly used practical transmission line is the coaxial type, with one conductor completely surrounding the other along the entire length of the line. In this design the electromagnetic field is confined to the space *between the outside of the center conductor* and the *inside of the outer conductor.* The dielectric material is again polyethylene, the inner conductor is either stranded or solid copper wire, and the outer conductor is a closely woven braid of copper wires, sometimes tinned or silver plated. A close-fitting black vinylite jacket is moulded on over the braid for weather and mechanical protection. As compared to the more commonly used moulded pair line like twin lead, coaxial line is heavier and more rugged mechanically, has somewhat greater losses and a lower propagation velocity, is much less subject to antenna effect or change of electrical properties by the weather, and costs more.

It is unbalanced to ground, because the outer braid has capacity to ground but the inner conductor has not, due to the shielding effect of the braid. Nevertheless, it is definitely superior where the somewhat greater losses can be tolerated, if there is trouble with pickup of unwanted signals or noise on the transmission line itself.

Two-Wire Shielded Line. – Still another type of transmission line combines many of the good properties of both the ribbon and coaxial types. It consists of two wires carried within individual small tubes of polyethylene, with a shield braid surrounding both the dielectric tubes. A vinyl jacket is put on over the braid for weather and abrasion protection. Also, a refinement of the inner construction reduces the losses considerably. This consists of a polyethylene thread wound spirally around each conductor within the polyethylene tube. The thread spaces the wire away from the walls of the tube a uniform distance, which reduces the amount of solid dielectric in the strong part of the field very near the wire surface. This line is particularly effective in areas where local noise and weak signals are a problem, as we saw in Lesson 10. It combines low loss with the fact that the line is balanced to ground.

It is also possible to make up a balanced line with a double run of coax, using the center conductor in each length as the conductors in the line, and grounding the shields. The impedance of such a line is about 100 ohms, and it is occasionally useful when the regular two-wire shielded line is not available. The PVF and loss factors for these lines are shown in Table C.

TABLE C

			Attenuation in db per hundred feet.		
Type	Z_0	*PVF**	*50mc*	*90mc*	*170mc*
RG-8/U	52	0.66	1.4 db	2.0 db	3.0 db
RG-11/U	75	0.66	1.3	1.7	2.5
RG-58/U	53.5	0.66	2.7	3.9	6.0
RG-59/U	73	0.66	2.5	3.5	5.4
ATV-225	225	0.84	2.3	3.0	4.5

*PVF, Propagation Velocity Factor.

You probably are already familiar with the appearance of the various lines, but they are shown in Fig. 20-28 for comparison and reference.

Which Line to Use? – The general information about selecting and using transmission lines has been covered earlier in this Course, principally in the Lessons 9, 10, 11, and 12. However a review summary of the more important points here will serve as a refresher, and should clear up any points that are hazy. If a more complete treatment of the practical use of transmission lines seems to be what you need, better review the Lessons mentioned above.

In selecting transmission line for a given installation, several factors must be considered, and carefully weighed against each other in reaching a decision. For average runs where the desired signal level is good, and the noise and signal pickup along the transmission line are not serious, parallel wire 300 ohm line is most suitable.

Twin conductor line is often fastened along the picture moulding or baseboard with well-spaced plastic headed tacks driven through the polyethylene between the conductors, for runs inside a building. Spacing the tacks too closely should be avoided as this will affect the line losses, especially at the higher TV frequencies.

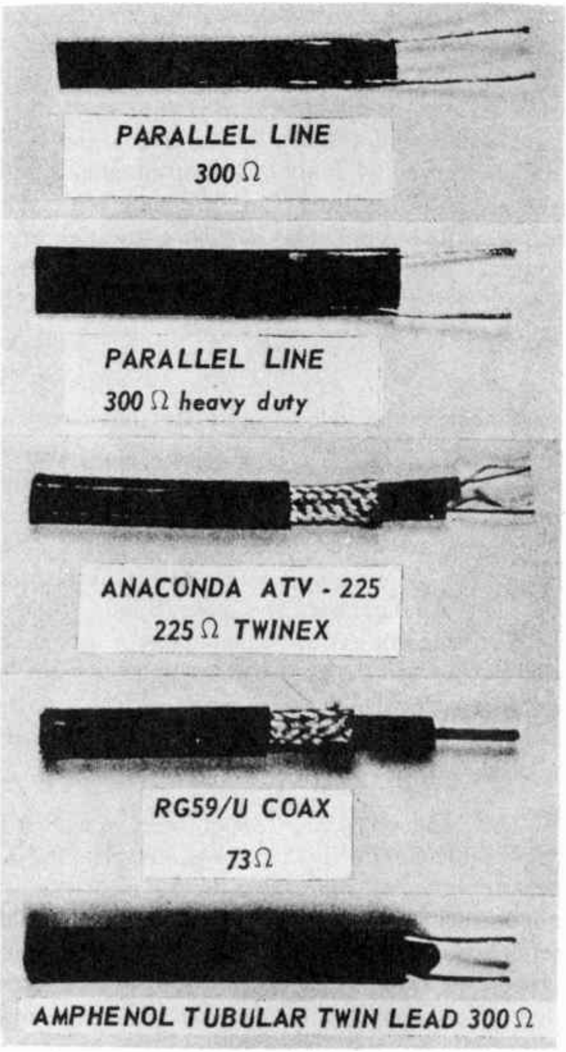

Fig. 20-28

Outside runs are usually held in standoff supports screwed to the wall. The use of tacks out of doors is not recommended, as action of the wind is likely to cause them to wear through the dielectric and contact the conductors, resulting in noise and loss of signal.

Outdoor Installation. – Outside runs are usually held in standoff supports screwed to the wall or other supporting structures. It is important that the line be held securely and permanently in such a way that normal action of the wind and weather will not tear it down, or cause it to rub and chafe against other objects. Also, *it should not be led for relatively long distances very close to electrical conductors like down spouts or lightning rods.* Spacing from conductors like these should be by at least three times the distance between the conductors of the line, and preferably two or three times that far.

In general, horizontal runs of parallel wire transmission line should be held to a minimum, particularly if they are up high, or broadside on to the general direction from which the television signals are coming. This will help to avoid excessive signal pickup in the line, and also is somewhat less susceptible to ignition noise pickup trouble.

Putting a number of smooth twists in each run between supports also helps to maintain balance to ground, and adds negligibly to the length of line required. Where it is necessary to run line through metal tubes or air ducts, etc., it must be supported away from the conducting surface, and where possible should be held at or near the center of the tube, in order to minimize losses and maintain balance. Smooth twisting also helps here. The use of care and common sense in running lines will be more than repaid in the improved and more reliable performance afforded.

Bends in any kind of transmission line should be fairly gradual, in spite of its flexibility; kinks should be avoided, and carefully removed when they occur, and all connections should be made carefully and protected from atmospheric corrosion when possible, to prevent the development of high resistance connections during the service life of the line. Remember also that vinylite and polyethylene are both thermoplastic materials which can be softened by excessive heat, with a resulting temporary weakening of their mechanical strength. For this reason they should not be laid directly across steam pipes, or in places where they will be exposed to hot flue gasses, boiling water, etc.

Special Precautions. – In areas near the ocean or other bodies of salt water, use of parallel wire line for outdoor runs may be impossible without adding an overall covering of seamless vinylite tubing for the entire length. This is needed because without it salt deposited on the surface of the polyethylene dielectric during even a short period of service will often increase the losses and change the characteristics of the line so much that reception becomes impossible. The salt does *not* have to come in contact with the wires, but produces the effect merely by being in the relatively strong part of the electric field near the wires. Salt will be deposited on the flexible vinylite tubing sheath of course, but it will be held farther from the wires in a much less intense part of the electric field, which reduces the losses greatly. The vinylite tubing and parallel wire line should be completely dry when assembled, and the tubing should be carefully sealed at the ends to prevent the entry of moisture in service. Even though this is done, drops of moisture may be seen inside the tubing after some time, due to condensation of water vapor from the air which was inevitably included inside the tubing during the original assembly. This will not ordinarily prove serious.

Incidentally, it is also good practice to make a small slit or hole in the vinylite tubing at the very lowest point of the drip loop, where the line enters the building. The hole should be made on the under side at the lowest point, so that if any water *does* find its way inside the tubing, it will drain off, instead of filling up the lower part of of the tube. Very little water or other injurious matter will enter upward through such a hole, and you may be saved a service call by this precaution.

In receiver installations where long transmission line runs are required, as in city apartments where the antenna is on the roof and the receiver is in a lower floor apartment, trouble may result from pickup of noise or unwanted radio signals on the line, when standard parallel wire two conductor line is used. If the desired signal level is itself high enough to sustain the slightly increased losses without dropping to the receiver input noise level, coaxial cable will usually reduce the pickup of unwanted signals enough to provide satisfactory reception. Such line is also mechanically somewhat more rugged than parallel wire line, although it should be just as carefully supported and protected from excessive heat and mechanical damage, merely as good engineering practice. It can be run near good conductors such as metal beams, wire lath, etc., because it is very much less sensitive to the effects of nearby conductors, due to the relatively complete confinement of the field, but it is not *completely* free from outside influences, particularly in very long runs. Since it is capacitively unbalanced to ground, it will usually be advisable to use trifilar transformers at one or both ends to provide the proper match when the receiver input or antenna requires balanced connections and/or an impedance other than that of the line itself.

In many of the later models of television receivers, a special part called an elevator transformer is included to accomplish this purpose at the receiver end of the line. By connecting this transformer according to the Service Data instructions, either coaxial or parallel wire line can be properly matched to the receiver input circuit.

Of course, it will often be possible to use resistor combinations for impedance matching when the signal level is high enough to permit the insertion loss, but this should be checked by test with the pad being considered, or by use of the Survey Meter before making a permanent installation.

In extreme cases where noise or signal pickup on the line are particularly severe and troublesome, it may be necessary to use twin conductor shielded line such as Twinex, RG-22/U, or two full lengths of RG-8/U connected in parallel. This arrangement will provide the greatest possible immunity to noise and signal pickup along the line run itself, but the attenuation will be somewhat greater, and of course, such line is considerably more expensive. In doubtful cases where the improvement to be had must be weighed against the increased cost, it will be necessary to discuss the question with the set owner, making clear in simple, non-technical terms what is causing the difficulty. The possibility of reducing the noise or unwanted signal at the source, or routing the transmission line through a less noisy space in or out of the building should also be carefully considered. Running the line by a longer route which is well away from serious noise sources may actually produce such an improvement in signal-to-noise ratio that coaxial or twin conductor shielded line is not required, with a resulting overall saving to the customer.

General Consideration. – In winding up consideration of practical transmission lines, several general points which apply to all types should be kept in mind. No line should be expected to bear any serious mechanical load other than its own weight, for while it may be strong enough to do so, such loads can change the characteristics of the line if sustained over a long period of time. This is mainly because polyethylene, like many other plastic substances, is subject to *cold flow.* This is a phenomenon which takes place over the ordinary range of room and outdoor temperatures in certain non-crystaline materials, when they are subjected to mechanical stress for a considerable period of time. It consists of a more or less gradual change of shape by yielding and flowing, just as if the substances were a very thick, viscous liquid, and if the polyethylene dielectric of transmission lines is subjected to sufficient pressure over a period of time, it may yield enough to permit the conductors to approach each other and even touch. At normal temperatures there is no danger from this effect unless the line is subjected to excessive strain, as in being bent sharply around an edge or corner, or pinched in a door or window.

Another point is the matter of heat applied to line materials. Polyethylene and vinylite are both softened by heat, and polyethylene melts rather sharply at about the temperature of boiling water, but will resolidify when cooled without becoming tacky, if not heated to the decomposition point. This property is convenient when making joints in lines, because a carefully cleaned soldering iron run at considerably less than soldering heat can be used for melting and moulding fragments of polyethylene smoothly into and around the joint for weather protection and electrical uniformity. By the same token, care must be used when soldering the conductors of transmission lines so that no more intense or long continued heat is used than is necessary to do the work. If too much heat is used, the polyethylene will be melted back away from the conductors, permitting them to move toward or away from each other, or even to short circuits, if the dielectric between them is entirely melted away at one point. If surfaces are carefully cleaned beforehand, and reasonable care is taken, no trouble from this source should develop.

◆

NOTES

NOTES

TELEVISION SERVICING COURSE

PREPARED BY

RCA INSTITUTES, INC.

A SERVICE OF RADIO CORPORATION OF AMERICA

HOME STUDY DEPARTMENT
350 West 4th St., New York 14, N. Y.

LESSON 21

RADIATION AND ANTENNAS

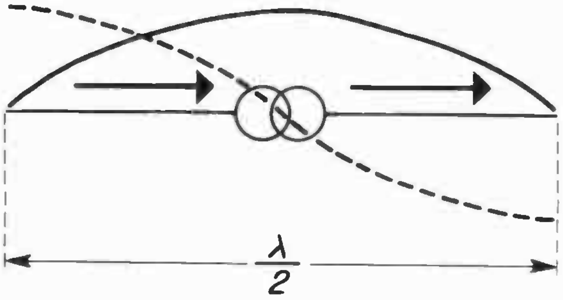

Lesson 21

RADIO TRANSMISSION OF INTELLIGENCE.

21-1. In Lesson 6 we studied, briefly, some of the properties of electromagnetic waves. In addition, we learned about some of the important properties of an antenna, such as bandwidth, directivity, and gain, and discussed the actual operating characteristics of various television antennas. Since there is a rather close relationship between this lesson and Lesson 6, it might be advisable at this point to go back and review Lesson 6. This will make it easier for you to understand the principles we are about to study. In this lesson we are going to be more concerned with the *why* of radiation and antennas, than we were in Lesson 6. Specifically, we will cover the following main topics:

a. Transmission of intelligence by radiation.
b. Composition of the electromagnetic wave.
c. Propagation of the electromagnetic wave.
d. Modulation and the carrier wave.
e. Transmitting and receiving antennas.
f. Practical television receiving antennas.

We are all familiar with the transmission of intelligence by conventional means. The telephone system is a classic example. We speak into the mouthpiece, sound waves are converted into electrical impulses, and these electrical impulses or their effects are transmitted by *wires* to their destination at the other telephone. Note that the transmission is accomplished by *wire*. It is also possible to transmit sound waves directly through various transmission mediums such as air, water, steel, and other materials.

Radiation. – In all of the preceding cases, the medium of transmission has been a physical material, something we can see or feel. However, it is possible to send intelligence from one point to another without the use of any intervening physical substance. This may be done by a phenomenon known as *radiation*. By means of radiation, it is possible to transmit intelligence over long distances without the use of wires or any other physical transmitting medium. Indeed, such transmission can be made successfully through a vacuum. It is by radiation that the intelligence originating at the transmitter reaches out through space to excite the receiving antenna. Before actually discussing radiation proper, it is first necessary to investigate the properties of the *radio waves* that are radiated.

A radio wave is one form of an *electromagnetic wave*. It is interesting to note that radio waves are *not* the only kind of electromagnetic waves, but just one of many. Other examples of electromagnetic waves are heat waves, light waves, and waves of X-rays. All of these waves are radiated in basically the same way and have many properties in common.

RADIATION OF ELECTROMAGNETIC WAVES

21-2. Before we can discuss the radiation of electromagnetic waves, we'd better get a clear idea of what such waves are. Briefly, an electromagnetic wave consists of an *electric field and an associated magnetic field, both travelling through space with the speed of light.* That is probably too brief a description to be of much help. So, since these waves consist of travelling *fields*, perhaps we'd better review what we know about fields.

Static Electric and Magnetic Fields. – In Lesson 16 (and a few other places since then) we defined an electric field as a region of space in which a force exists, which can be experienced by any charged body entering the region. The force of an electric field is set up by the presence of charge. We also learned that a magnetic field is a region of space in which another force exists, which can be experienced by a *moving* charge, magnetic fields are set up by current – that is, by charges in motion.

Up to that point we were concerned only with *static* fields – that is regions of electric or magnetic force in which, although the magnitude and direction of the force might vary from point to point within the field, they did not vary with *time* at any one point.

Changing Fields. – Our next step was to consider fields that vary with time. For instance, we learned that as a current in a wire increases, the magnetic force in the neighborhood of the wire increases; and when the current diminishes or stops, the force also diminishes or ceases at each point in the field. Also, when the current reverses in direction, so does the direction of the magnetic force. In Lesson 17, in connection with the idea of instantaneous power, we learned that as a magnetic field is built up around a wire due to an increase of the current, *energy* is taken from the generator and *stored in the magnetic field;* and when the magnetic field collapses, this energy is returned to the generator.

A similar set of facts was developed for a changing electric field. An electric field exists between any two points that differ in potential. Thus, an electric field exists between the plates of a charged condenser. As the voltage across the condenser increases, so does the force of the field between its plates. When this happens, *energy* is taken from the generator, and *stored in the electric field;* and when the voltage across the generator decreases, this energy is returned to the generator.

If an alternating voltage is applied to a condenser, both the electric and magnetic fields alternate in direction. The extent of these alternating fields could be increased simply by moving the condenser plates further apart, and increasing the length of the lead wires. Then, at any point in the vicinity of the system, an alternating electric force and an alternating magnetic force would exist simultaneously. But note that in both cases, the energy stored in the fields is returned to the generator at each alternation.

We can visualize this ebb and flow of energy like this. As the instantaneous current becomes, say, 1 ma., the magnetic field strength at the surface of the wire is 1 unit of magnetic field strength. When the current reaches 2 ma., the field at the wire surface is 2 units, while a point a foot away has reached a field strength of 1 unit. It is as though the "1 unit point" had moved out a foot from the wire. As the current continues to increase, the point of 1 unit field strength moves further and further from the wire. But when the current starts to decrease, this "1 unit point" moves back toward the wire.

Now for some new facts. When the frequency at which the electric and magnetic fields alternate gets up into the r-f range, strange things happen. A part of the energy stored in the electric and magnetic fields *keeps right on going.* (We'll explain presently how this is known to be so.) This means that our "1 unit point", when it gets a certain distance from the source, becomes two points. One returns to the wire, but the other continues to move out through space, away from the source. Our wire supplying alternating current to a condenser has become an *antenna,* which is now *radiating* energy.

The changing field around the energy source can be considered as having two components. The part whose energy returns to the source is called the *induction field.* The part whose energy continues out through space is the *radiation field.* Each of these components of the changing field, in turn, has two parts – a changing electric field and a changing magnetic field.

Let's return to the radiation field, and see where the idea of a *wave* comes in. For simplicity, we'll concentrate on just the magnetic component of the radiation field. At any point near the antenna, there is an instant when the magnetic force, or field strength, is a maximum, due to the maximum instantaneous current. As the current continues to change, the point of maximum field strength moves outward from the antenna. It is followed by a negative maximum field – that is, a region of equal field strength, but opposite direction. These positive and negative maximums follow each other alternately, constituting a *wave* of magnetic field strength travelling out from the anetnna.

At any one *point* in space, the magnetic field strength will therefore alternate in time, as the regions of positive and negative magnetic force sweep past the fixed point. The time interval between consecutive positive maximums is, of course, the *period* of the wave. At any one *instant,* the magnetic field will be so distributed in space that, if we could travel along a straight line away from the antenna, while time stood still, we would find that the field would vary in magnitude and alternate in direction as we moved along this line. The *distance* between points of positive maximum field strength, measured along the line of travel, is the *wave length.* The amplitude of consecutive maximums diminishes slightly as we move further from the antennas.

These statements, of course, also hold true for the electric component of the travelling field. Neither component can exist without the other, and for a very interesting reason. We know from Lesson 17 that when the flux lines of a changing magnetic field cut across a conductor, a voltage is induced between the ends of the conductor. But if we removed the conductor, the changing magnetic field would induce the same potential difference between the points in the space where the conductor was! That means that an electric field is induced in space by the changing magnetic field. Furthermore, a changing electric field generates a magnetic field. As a matter of fact, this can be considered an explanation of the mechanism of wave propagation through space. Each field component, as it changes rapidly generates the other at points further removed from the antenna.

The Elementary Dipole. – Let us assume that for experimental purposes we have a very short antenna. This antenna is so short that, regardless of the frequencies involved, the current in the antenna will be the same throughout its length. This is unlike an ordinary, actual antenna, where the value of current varies along its length. This short experimental antenna will be known as an *elementary dipole.*

Now let's take this elementary dipole and connect to it an alternating current generator whose output frequency can be varied over a wide range, thus:

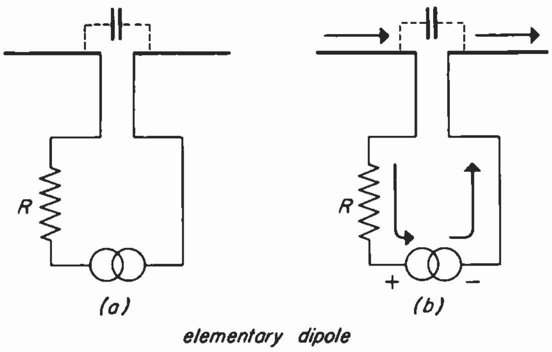

Fig. 21-1

The resistance *R* represents the total resistance to the flow of alternating current of the elementary dipole and connecting wires. It looks as though the generator is connected to an open circuit, but this is not so because there is *capacity* between the two portions of the dipole, and also various other capacities to ground which give us a complete circuit for alternating current.

The Induction Field. – Let us adjust the generator to a very low frequency, say 10 cycles, and examine the conditions in the circuit. We will start with the generator voltage at zero, and rising toward a positive maximum. Current begins to flow in the circuit, as shown by the arrows in Fig. 21-1 (b). As the current begins to flow through the wires and the antenna, a magnetic field builds up. This magnetic field reaches a maximum at the instant when the *current* is maximum. However, at the time the magnetic field is maximum, there is no charge in or on the capacitance, and the electric field will be zero. As the generator voltage decreases from a positive maximum (but is still positive), the current and magnetic field begin to decrease. However, the capacitor voltage (and electric field) begin to increase, so that when the current and magnetic field are zero, the capacitor voltage and electric field are actually a maximum. We conclude from all this that the current and voltage (and magnetic and electric fields) are 90 degrees apart in time phase. This is the phase relation of current and voltage across the condenser in any series RC circuit, as explained in Lesson 17. At the low frequency with which we are presently dealing (10 cycles), these fields are the only ones which are detectable by practical means, and are known as the *induction* fields.

The induction fields are not particularly useful for communication purposes, since the strength of such fields drops very rapidly with distance. To be more specific, the strength of the induction fields decreases as the square of the distance. This means that every time the distance is doubled the field strength falls to one-fourth of its previous value. The important feature of the of the induction fields is that *all* of the energy stored therein is *returned* to the antenna and none is radiated. If we were to measure the power delivered by the generator, we would discover that all of this power is dissipated in the form of heat in the resistance of the wires and the antenna. Practically none of the generator power is radiated into space at such a low frequency.

The Radiation Field. – Now let us increase the generator frequency to some higher value, say 100,000 cycles. If we examine the operating conditions existing now, we will find that something unusual has taken place. That is, the power delivered by the generator is *not* all accounted for by the heat dissipation of the resistance. What then happens to this power? It leaves the generator, never to return, but it does not show up as heat. Obviously, some power is leaving the system and going out into space. This is the phenomenon of *radiation* by electromagnetic waves. What about the induction field we previously discussed? It is still present *but* at a *reduced* value compared to what it was at 10 cycles. The amount by which the strength of the energy of the induction field has decreased (assuming the same generator power input) is exactly equal to the amount of energy which has been *radiated*. This is logical, since all of the energy in the induction field is returned to the antenna and therefore any energy which is not returned must be the energy radiated from the antenna. This failure of some of the energy to return to the antenna has led to the concept of something called *radiation resistance*.

Radiation Resistance. – We can account for the energy of the induction field appearing as heat in the physical resistance of the antenna system. However, the radiated energy does not appear as heat, and is not so easily accounted for. To assist in calculating and understanding antenna radiation we have invented the idea of radiation resistance. To account for the radiated energy, it is assumed that the antenna, or the space surrounding it, has a certain resistance which, if it really existed, would consume the amount of power that is actually radiated from the antenna. Bear in mind that this is not a real resistance, but just something invented for convenience. Let us illustrate this radiation resistance by means of a simple example illustrated here:

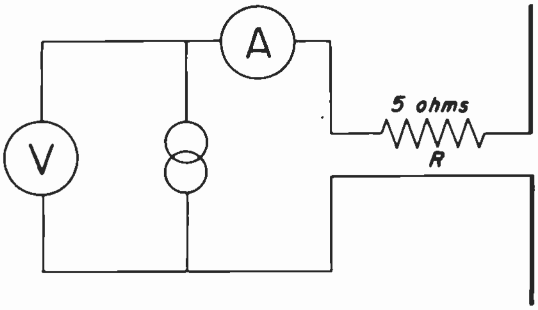

Fig. 21-2

Let us assume that our generator is operating at 100,000 cycles. We measure a generator voltage of 10 volts and a current of 1 amp. This means that the power delivered by the generator is

$$P = EI = 10 \times 1 = 10 \text{ watts}$$

We measure the resistance R of the antenna and connecting wires and find this to be a total of 5 ohms. There is 1 amp. flowing through this resistance, so the power dissipated in it is $P = I^2R = 1^2 \times 5 = 5$ watts. But this accounts for only half of the power delivered by the generator. What happened to the other half (5 watts)? It must have been "dissipated in the radiation resistance" – that is, radiated. Let's find the value of radiation resistance. We know the current is 1 amp. and the power radiated is 5 watts. Since $P = I^2R$, then $R = \frac{P}{I^2} = \frac{5}{1} = 5$ ohms radiation resistance. In this particular example, we find that the radiation resistance is the same as the real resistance, or 5 ohms. This is not always the case. At 10 cycles, for instance, we would have found that, with the generator delivering 10 watts, the entire amount would have been dissipated in the real resistance, and under this condition the radiation resistance would be zero. This is only another way of saying that practically no radiation takes place at 10 cycles.

What we have said so far seems to indicate that radiation, as well as radiation resistance, *increase* as the *frequency* increases. This is definitely the case. As the frequency is increased, the amount of energy radiated increases, and the energy in the induction field decreases. At some tremendously high frequency we would find that all of the energy is radiated and the induction field no longer exists. It should be noted that for the purposes of communication, the energy in the induction field is of no value, since it is rapidly attenuated over short distances. It is therefore the aim of designers to see that as much power as possible is radiated from the antenna, and that as little as possible remains in the induction field.

Up until now, we have been talking about the induction field, and also the fact that radiation may take place under favorable conditions. We must now examine more carefully just what this radiation field is like.

Differences Between Induction and Radiation Fields. – The radiation field differs from the induction field principally in two respects. First of all, the radiation field does not return to the transmitting antenna but travels away from it at the speed of light (186,000 miles per second). Secondly, the electric and magnetic components of the radiation field are not 90 degrees apart in time phase but are actually in the *same* time phase.

Space Relations of Field Components. – So far we have neglected an important fact about electric and magnetic fields – that the forces involved have a definite *direction* as well as magnitude. For instance, we know that the lines of an electric field between two parallel charged plates are perpendicular to the plate surfaces. The *force* they exert on an electron is in the direction of these lines.

This is equally true if the voltage between the plates alternates. For instance, if the plates are horizontal, the field lines are vertical. As the voltage alternates, the force is directed first up and then down, alternately. But the force is never directed horizontally, or at some intermediate angle. It is only in this sense that we say the direction of an alternating field changes.

As we have stated, there is always a magnetic field associated with a changing electric field, and vice versa. The combination of the two constitutes an *electromagnetic field.* At any point in the total field, *the directions of the electric and magnetic field lines are at right angles to each other.* The magnetic flux lines are always closed loops, with no ends. In the induction field about an antenna, the electric field lines terminate on the antenna. In the radiation field, however, they loop around to link the magnetic field lines. But in either case, they are perpendicular at every point in space to the magnetic field lines.

With this brief background, let's examine the field of a radiating antenna.

Configuration of the Radiation Field. – We'll start with our elementary dipole, which we will set up in a vertical position in space. The antenna is then said to be *vertically polarized.* Television antennas are, by general agreement, horizontally polarized. But for the moment, the vertically polarized antenna serves better to illustrate the relations involved. With the antenna in this position, the magnetic field lines will be in the form of concentric circles, lying in horizontal planes. The configuration of the electric field lines is shown in Fig. 21-3

When a wave is radiated from an antenna, the electric and magnetic fields both move out *in all directions.* The electric component links the magnetic component, but is at right angles to it, or lying in vertical planes as shown in the figure. As the fields spread out into space, they form spheres of ever growing dimensions.

Any of these spheres is a *wave front.* A wave front is merely an imaginary surface, over all parts of which the field strength has the same magnitude at any instant. However, if we are a large number of wavelengths away from the transmitting antenna, the dimensions of the spherical wave front will be so great that the advancing waves will appear to be arriving in a flat plane. This is true for the same reason that a small portion of the earth's surface appears to be flat. If we take a small area of the wave front, as indicated by the dotted lines in Fig. 21-3, and

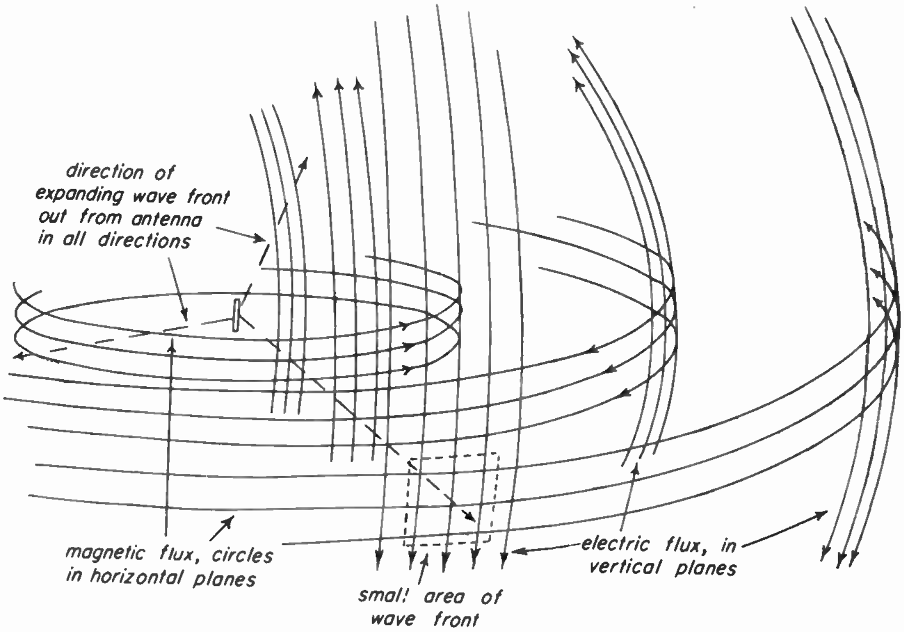

Fig. 21-3

expand it, we have an enlarged "picture" of the electromagnetic wave, as it appears to a receiving antenna, thus:

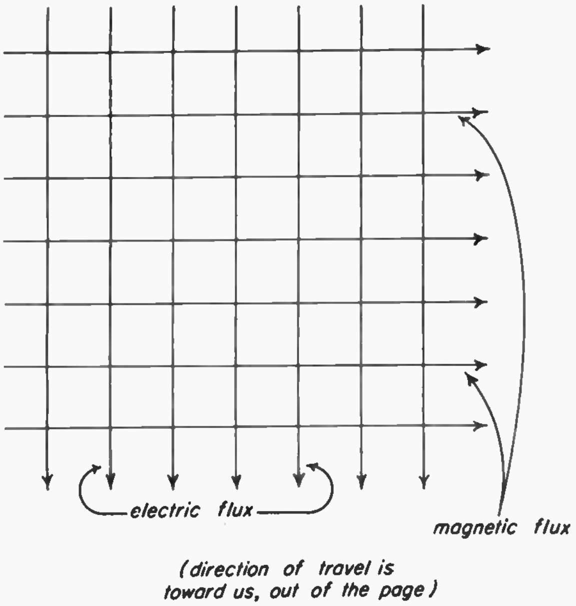

Fig. 21-4

This represents the fields of a *vertically polarized* radiated wave. The electric field lines are seen to be parallel to the antenna. As mentioned in a previous lesson, the direction of *polarization* of a wave is the direction of the electric field, which in turn is determined by the position of the transmitting antenna with respect to the plane of the earth's surface. Therefore, this is a vertically polarized wave. Note also that in this small section of the wave front, the magnetic field is at right angles to the electric field. The arrows on the various lines represent the direction of lines of force.

Referring back to Fig. 21-3, it will be noted that *direction of propagation* (that is, the direction in which the wave front is moving) *is at right angles to both the electric and magnetic fields.*

Thus, in Fig. 21-4, the wave front is moving *toward you, out of the page.* This direction of travel is perpendicular to the field lines of both components of the radiation field. It must be realized that this is an instantaneous picture of the wave front. As the wave front travels past a given point, the intensities of the fields vary sinusoidally with time. Realizing this, we can see that if we "snap another picture" at the receiving point, one half cycle later than Fig. 21-4, the direction of the lines of force of *both* components of the radiated field would be *reversed.* On the other hand, if only *one* set of lines changes direction this would indicate that the direction of travel of the wave front had reversed. That is, the wave which was previously coming toward you out of the page, would now be going away from you, into the page.

If we could actually see a cross section of the moving fields – the section being taken in the plane of propagation – we would see a picture like this:

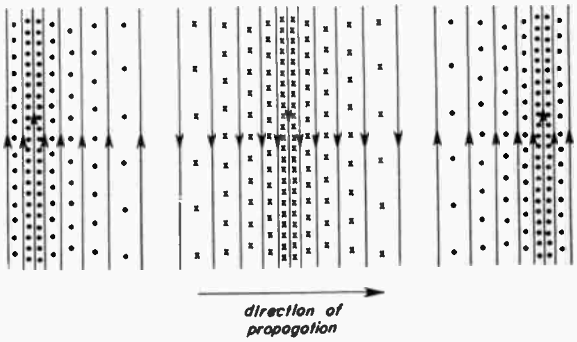

Fig. 21-5

Here we are looking at the vertical electrical field as it sweeps past us, causing the electric field strength at a fixed point in the path of the wave to vary sinusoidally with time. The dots represent magnetic field lines pointing toward us, and the crosses are magnetic field lines pointing away from us. The whole system of fields, electric and magnetic, is of course moving at the same speed toward the right.

There is one final point to be drawn from these "pictures" of the moving field. Remember that the electric field lines represent the direction of an electric force. Such forces exist only between points that differ in potential. Hence, *there is a potential difference in space between any two points on the same field line.* Appearances to the contrary notwithstanding, there is no potential difference between points in the same horizontal plane, but on different field lines. If there were, the field lines could not be vertical, since there would then be an electric force along the direction of travel. This is an important point, since it explains why a TV antenna picks up practically no signal if it is oriented so its end points toward the transmitter, rather than facing it broadside. We'll discuss this again, when we take up receiving antennas.

Summary: Let us now take out a minute to summarize the important points of radiation so far. First, there are two electromagnetic fields, or sets of fields, present in the vicinity of the transmitting antenna. These are the induction field and the radiation field. Each has an electric and magnetic component, at right angles to each other. The components of the induction field are 90 degrees out of time phase, and exist only in the vicinity of the transmitting antenna. They are *not* radiated. In general, the energy in the induction field is not useful for communication, as it is returned to the transmitting antenna. The radiation field is the one actually used for long distance communications. Its electric and magnetic components are in the *same* time phase, and travel outward in all directions from the antenna with the speed of light. The energy in the radiation fields is not returned to the transmitting antenna, but goes out into space. The polarization of the radio wave is defined as the direction of the electric field, which in turn is determined by the physical position of the transmitting antenna with respect to the earth's surface. For example, an antenna which is positioned vertically will radiate a vertically polarized wave.

Frequency is a very important factor in radiation. At very low frequencies there is practically no radiation at all, most of the energy remaining in the induction field. As the frequency is increased, the amount of radiation increases and the energy in the induction field decreases. At very high frequencies, most of the energy is radiated, and very little remains in the induction field.

MODULATION AND SIDEBANDS

21-3. When you speak into the microphone at a broadcast station, you generate electrical waves with frequencies in the audio range. These frequencies may range from below 100 cycles to approximately 15,000 cycles. In the case of wire transmission, these audio frequencies are sent out over the wires unchanged, and are received in their original form to actuate sound reproducing devices. This is a relatively simple and straightforward process, and it would be nice if this could be applied directly to radio transmission. Unfortunately, this is not the case, and there are several good reasons why we cannot transmit audio frequencies directly.

First of all, we must transmit the entire band of audio frequencies starting at about 100 cycles. From our previous discussion we learned that very little radiation takes place from our elementary dipole at such low frequencies. It is possible to have radiation occur at 100 cycles, but this would require an antenna whose length would exceed 1000 miles, and another similar antenna for receiving. This is a lot of wire just to transmit a few miles, and there wouldn't be much percentage in such a system. Besides, the average backyard would have difficulty accomodating a suitable receiving antenna.

Even if it were practical to transmit and receive such low frequencies there is still another factor which would rule out its use for broadcasting. This is the impossibility of separating any two stations, since they would all be using the same frequency spectrum. Thus, even if the system could work, we would be able to have only one broadcast station for a very large area. There are still other reasons why we cannot have successful broadcasting in this fashion, but these two reasons are the ones which interest us the most.

Carrier Waves. – Well then, what are we to do? We want to radiate the intelligence over long distances, but we cannot do it directly. We will have to use some intermediate means to *carry* the intelligence. This intermediate means or "carrier" must be such that it will (1) permit efficient transmission by radiation; (2) make it possible to separate or "tune" to different stations in the same locality.

You might find it useful to think of a *carrier* in radio terminology, as you do in terms of a "carrier" in transportion. Suppose you wanted to go from New York to Los Angeles. You could walk it, if you were young and foolish, but this would be pretty impractical. On the other hand you could get on board an airplane and be "carried" to Los Angeles in a very efficient manner. The airplane, in this case, would be the *carrier.* How does all this apply to radio? Well, we must provide a *radio carrier,* which will "carry" the intelligence we desire to transmit, and do it in a practical and efficient manner. This "carrier" in radio consists of a separate, additional high frequency, generated by an oscillator that is part of the transmitter. This wave is known by the rather logical term of *carrier wave.* The audio signals are made to vary some characteristic of the carrier wave, and in this manner, the intelligence is transmitted over long distances.

The carrier wave differs from the audio waves (electrical) in two major respects. First of all, it is a wave of *single* frequency, rather than a *band* of frequencies. And secondly, the frequency of the carrier is much higher than the audio frequencies. For example, carrier waves used in standard broadcasting have frequencies ranging from about 550,000 cycles to 1,600,000 cycles (550 kc to 1600 kc). Contrast this with the maximum audio frequency transmitted, which is in the order of 15,000 cycles.

It is necessary that the carrier frequency be much higher than the audio frequencies for two important reasons. First, the transmitting frequency must be high so that the transmitting antenna and other transmitting and receiving equipment will be practical in size and efficiency. Second, it must be several times higher than the highest audio (or video) frequency, so that it will be possible to superimpose the audio (or video) frequencies upon the carrier. This point will be made clearer when we discuss *modulation sidebands*.

In the case of television transmission, this latter reason assumes even greater importance. While the audio frequencies only reach up to 15,000 cycles, the video (picture) frequencies may be as high as 4,000,000 cycles (4 mc.). To provide a carrier for such high intelligence frequencies, the carrier frequency is required to be much higher. The carrier frequencies for television broadcasting start at about 54 mc., and one of the important reasons for this is to accomodate the wide range of video frequencies.

From the foregoing discussion you now appreciate that it is not possible to transmit audio or video frequencies directly. Rather, they must be superimposed upon another, and higher, frequency called the *carrier*. This carrier permits the intelligence to travel from transmitter to receiver. In the process, the form of the intelligence signal is somewhat altered. At the receiver, the intelligence is extracted from the carrier and converted to its original form.

Modulation. – The process by which intelligence is superimposed upon a carrier is called *modulation*. We may also define modulation as *the process of varying some characteristic of the carrier wave in accordance with the intelligence to be transmitted*. Two of the most widely used types of modulation are known as *amplitude modulation* (AM) and *frequency modulation* (FM). Amplitude modulation is the type used in standard broadcasting. *Both* types are used in television broadcasting. We are going to discuss amplitude modulation here. Frequency modulation will be covered in a later lesson.

Amplitude Modulation. – Let us first try to define amplitude modulation and then see how it works. We may say that *amplitude modulation is the process whereby the amplitude of the carrier is varied in accordance with the intelligence to be transmitted*. Let's see how this works out. We will assume for the sake of simplicity, that we have a single audio tone of 1000 cycles (1 kc) which we desire to have transmitted. This can not be done directly, so a carrier of 1000 kc has been decided upon. These two waves are illustrated here.

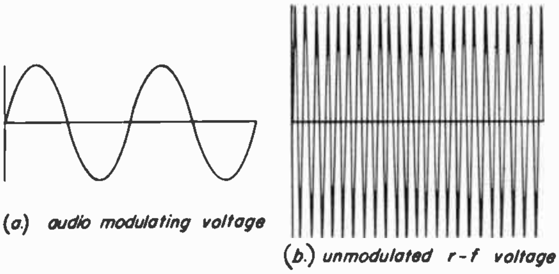
(a) audio modulating voltage

(b.) unmodulated r-f voltage

Fig. 21-6

Now recall that the *amplitude* of a sine wave was defined in Lesson 17 as its maximum value. The result of varying, or *modulating*, the amplitude of the carrier wave in accordance with the audio signal is a brand new waveform like this:

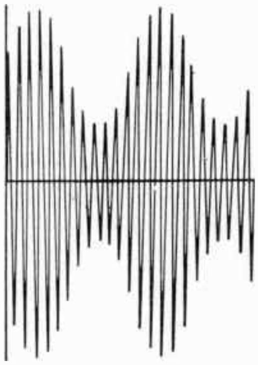
Fig. 21-7

It should be pointed out that this last wave is *not* the sum of the carrier and modulating signals. Merely adding waves of the two frequencies would vary the average value of each individual carrier cycle, not its amplitude. We will see that the modulated wave is, however, the sum of three frequencies – the carrier and two new frequencies called the side frequencies. Each side frequency differs from the carrier by the frequency of the modulating signal. Thus, for the frequency values we assumed for our example, the modulated wave would contain the carrier frequency of 1000 kc, plus two side frequencies of 1001 and 999 kc respectively.

Circuit for Producing Amplitude Modulation. – Before going further with this topic, let us consider the means by which amplitude modulation can be accomplished. The simplest circuit to understand is the one called a *plate modulation* circuit. Its essentials are like this:

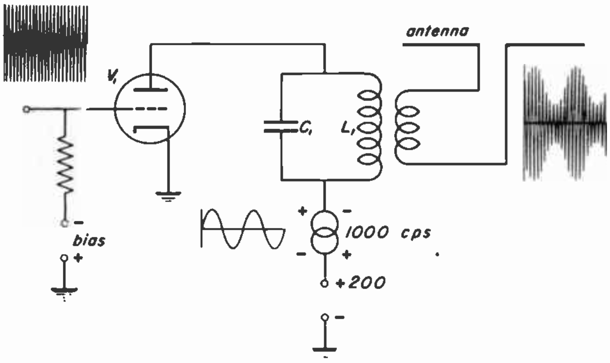

Fig. 21-8

Let us first examine the components of the circuit and then see how it works. We have first of all, a radio frequency amplifier tube, V_1. This tube is supplied with proper bias from an external source. The signal voltage at the grid of V_1 is an a-c wave of 1000 kc. In the plate circuit of V_1 we find a parallel tuned circuit consisting of C_1 and L_1. This circuit is tuned to the carrier frequency of 1000 kc, and constitutes the plate load of V_1. The a-c generator represents the source of 1000 cycle alternating voltage. This is the audio modulation voltage. It is applied in series with the B + supply to the plate of V_1. The output of the modulation generator has a peak value of 200 volts; its peak-to-peak swing is therefore 400 volts. The B plus supply is 200 volts.

To start with, we will assume that no modulation voltage exists, and V_1 is just acting like a straight radio frequency amplifier. Under these conditions we assume that the output of V_1 is a 1000 kc sine wave of constant amplitude of 50 volts, or peak-to-peak value of 100 volts. Now we will apply modulation and see what happens step by step as shown in Fig. 21-9.

Between *A* and *B*, the modulation voltage is zero, and as you can see, the output of V_1 remains constant at 100 volts (peak-to-peak value). However, at point *B* the modulation voltage begins to rise in the positive direction. This makes the voltage at the top of the modulation generator plus and the bottom minus, as shown at the left of the generator in Fig. 21-8. You will observe that the modulation voltage now *adds in series* with the power supply voltage. This means that the voltage applied to the plate of V_1 is *increasing*, and at a rate and amount determined solely by the modulation voltage. An increase of applied plate voltage will result in an *increased* gain of the amplifier, and therefore an increased radio frequency output from V_1, in direct proportion to the modulation voltage.

Notice in Figure 21-9 how the radio frequency output of V_1 begins to increase past point *B*. At point *C* the modulation voltage has risen to plus 100 volts. Adding this in series with the B plus supply gives us an instantaneous plate voltage of 200 plus 100, or 300 volts. This causes a further increase in the output of V_1 to 150 volts peak;to-peak, and this increase exactly follows the shape of the 1000 cycle modulation voltage. The modulating voltage reaches its positive peak of 200 volts at point *D*. Adding this to the power supply voltage produces an instantaneous plate voltage of 400 volts. This in turn causes the output of V_1 to increase to 200 volts peak-to-peak – double the original value – as shown in the figure.

As we proceed past point *D*, the modulation voltage begins decreasing, but is still positive. At point *E*, it is plus 100 volts and the plate voltage is 300 volts. The output of V_1 now drops back to 150 volts, still following the shape of the modulation voltage. Proceeding further to point *F*, the modulation voltage becomes zero and the output of V_1 returns to its original carrier amplitude. Going past point *F*, the modulation voltage becomes *negative*. It now subtracts from the power supply voltage so that the instantaneous plate voltage of V_1 is reduced. At point *G*, the modulation voltage becomes minus 100 volts. This means that the plate voltage will be 200 minus 100, or 100 volts. As shown in Fig. 21-9, the output of V_1 now has dropped to 50 volts peak-to-peak, but still following the waveshape of the modulation voltage. At point *H*, the modulation voltage is minus 200 volts, making the plate voltage *zero*.

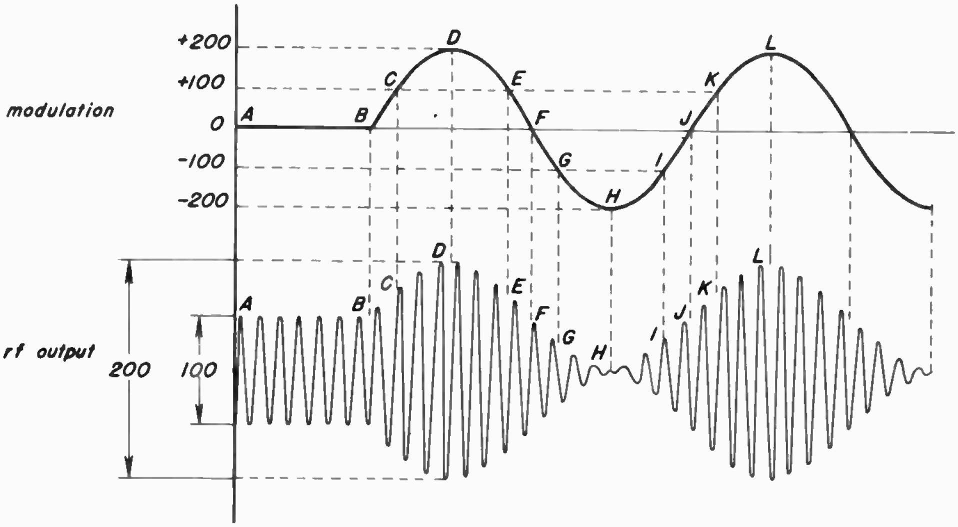

Fig. 21-9

With zero plate voltage, the output of V_1 is also zero. At point *I*, the modulation voltage is minus 100 volts and the plate voltage rises to 100 volts. This, as shown, increases the output of V_1 to 50 volts. Finally, at point *J* the modulation voltage returns to zero volts, the plate voltage to 200 volts, and the output of V_1 to the carrier level of 100 volts peak-to-peak.

If we joined the peaks of the individual r-f cycles of the output by a dotted line, you could plainly see that it has the exact same shape, and so contains the same information, as the original 1000 cycle tone signal. Thus we have produced a 1000 kc cycle wave which is *amplitude-modulated* by a 1 kc tone signal. This is the wave which goes to the transmitting antenna and is radiated through space to the receiving antenna. As we said before, when this wave comes to the receiver, the modulation information is extracted from the carrier, and we will again be able to hear the 1000 cycle tone.

In the foregoing discussion, we made one statement that may bother you a bit – that is, that the variation of the plate supply voltage varies the gain of the amplifier. Don't try to reconcile this with the expressions for gain of an amplifier given in Lesson 19. The r-f amplifier used for modulation is usually operated Class C. Its plate current is therefore a series of pulses, whose average value does vary with changes in the plate supply voltage. These pulses of current flow through the tuned load, which attenuates all harmonics except the fundamental, causing an a-c voltage drop across the load whose wave form is substantially sinusoidal. In practice, however, it is very difficult to attain the requirement that the r-f output voltage be exactly proportional to the instantaneous plate voltage. The circuits actually used, therefore, are considerably more complicated than the simple one we have discussed. Our purpose here is merely to explain what amplitude modulation is, not to present a detailed discussion of transmitter design.

The modulating signal need not be a sine wave. It can be a nonsinusoidal audio signal, such as is generated when we speak into a microphone. Or it can be the output of a television camera, to which blanking and sync pulses have been added. Then the carrier amplitude is made to vary in accordance with the video signal, and thus the carrier wave carries the picture information required to operate a TV receiver.

Sidebands. – We have stated that a carrier wave, whose amplitude varies in accordance with a sine wave modulating signal, consists of the sum of three frequencies – the carrier frequency, and the sum and difference of the carrier and modulating frequencies. *These sum and difference frequencies are components of the modulating wave.*

If the modulating signal is not a sine wave, but a more complex signal like the video signal, it can be analyzed into a fundamental and a large number of harmonics, as explained in Lesson 17. Each of these harmonics in the modulating signal will produce a pair of side frequencies in the modulated wave. When there is more than a single pair of side frequencies, the entire lot is referred to as the *sidebands*. Each sideband is a band of frequencies extending as far above or below the carrier frequency as the highest harmonic of the modulating signal. In the video signal, the

0

highest harmonic required for proper picture reproduction is about 4 mc. If the carrier were 100 mc, for instance, the upper sideband would include all frequencies from 100 to 104 mc, and the lower sideband all frequencies from 96 to 100 mc. The sidebands are the means by which the intelligence of the modulating signal is transmitted. The carrier component of the modulated wave does not itself carry any of the intelligence.

In order to transmit the intelligence, therefore, the transmitter must radiate not only the carrier frequency, but the sidebands as well. Either sideband could be eliminated from the radiated wave, and the remaining one would still contain all the intelligence, though in lesser strength. But if *both* sidebands were eliminated, the intelligence would be lost. It is therefore necessary that the receiver be so tuned as to accept a band of frequencies that includes the carrier and at least one of the sidebands.

Television Bandwidth. – As stated above, each sideband of a television signal is a band of frequencies about 4 mc wide. If both sidebands are to be transmitted, the bandwidth of the entire radiated signal would have to be 8 mc. For reasons that we need not discuss here, a part of the lower sideband is removed from the signal before it is radiated, and the bandwidth of the radiated signal is therefore about 6 mc. We can now consider how this affects the carrier frequencies required.

It should be clear that the carrier frequency *must* be *at least* as high as the width of the lower sideband. Secondly, the lowest frequency to be transmitted must be in the r-f range. Thirdly, the entire bandwidth to be transmitted must be much smaller than the carrier frequency, in order to permit tuning circuits to operate properly. And finally, since a number of stations must be able to transmit at once, they must use different parts of the frequency spectrum, and the station with the lowest carrier frequency must meet all the requirements previously noted. For these reasons, the lowest carrier frequency that can be used in television is about 40 mc. In practice, the lowest frequency channel used for TV is Channel 2, 54 to 60 mc.

Radio broadcasting can and does use much lower carriers. This is because the audio bandwidth is only twice the highest audio frequency. In practice, a channel of no more than 10 kc – 5 kc each side of the carrier – is used, and gives satisfactory reproduction of the original sound. Hence broadcast frequency tuning circuits, even at the lowest broadcast carrier frequency, can be tuned much more sharply than can TV receiver tuning circuits.

PROPAGATION THROUGH SPACE

21-4. Now that we have modulated our carrier wave, let us follow it on its journey to a receiving antenna, and find out what happens to the wave en route, and how it is affected by various things. In doing this, bear in mind that we are interested only in waves at television frequencies, in the range from 54 to 216 megacycles.

"Line of Sight" Transmission. – At television frequencies, radio waves reach the receiving antennas along more or less straight-line transmission paths. That is to say, practically the only waves exciting the receiving antennas are those close to the earth. Waves of this type are commonly known as *ground waves*, and this kind of transmission is often referred to as *line-of-sight* transmission. The inference is that the waves can affect only those receiving antennas which can actually be seen from the transmitting antenna. This is not exactly true, as we shall see, but gives a useful rule of thumb for determining receiving distances.

Television transmission must rely upon ground waves because at the high frequencies involved there is practically no reflection from the ionized layers of the upper atmosphere. At lower frequencies, particularly below 30 megacycles, the radio waves travelling up are reflected from the ionized layers of the upper atmosphere back to the earth. These reflected signals may appear at the surface of the earth thousands of miles away from the transmitter, and are the basis for much long distance radio communication. Television signals are not reflected (because of their high frequencies), but are assumed to travel right through the ionized layers without being returned. This restricts television transmission to practically line-of-sight distances, but is advantageous because it prevents reception of multiple images due to ionosphere reflections.

Deviations from Straight Line Transmission. – We stated earlier that radio waves are but one of many kinds of electromagnetic waves. That word "kinds" bears a little explaining. Actually, *all* electromagnetic waves have the characteristics described in Sec. 21-2. They all have an electric and magnetic component, at right angles to each other and to the direction of propagation. They *differ* only in their frequency and wave length. The phenomenon we know as *light* is merely a train of electromagnetic waves of incredibly high frequencies (upwards of 400,000,000 mc). Both light waves and radio waves travel at the same velocity – about 186,000 miles per second. In both cases, the wave length is merely the velocity divided by the frequency.

Since light waves and radio waves are essentially similar, we might expect that they would behave in similar fashion. They do. Furthermore, the higher the frequency of a radio wave, the more closely its behavior approximates that of light. Radio waves are similarly affected by objects in their path, which cause them to deviate from strict straight line transmission. The effects of these three phenomena are much more pronounced at television frequencies than they are at radio frequencies in the broadcast band. We will examine one at a time to see how each affects television signals. Any particular signal may, of course, be affected by one, or by any combination, of the three, depending on the individual circumstances.

Refraction. – When electromagnetic waves pass through a medium of varying density, they are bent from their normal path, and in the direction of the higher density. Such a medium of variable density is presented by the earth's atmosphere. Since the pressure of the atmosphere decreases with altitude, it follows that the greatest air density will exist at the earth's surface, and that decreasing densities are encountered as you rise above the earth. The effect of the increasing densities at lower elevations is to cause the waves to bend *downward* toward the earth. This bending is actually beneficial to television reception since it increases the distance of reception beyond the line-of-sight. The effect is illustrated in Fig. 21-10.

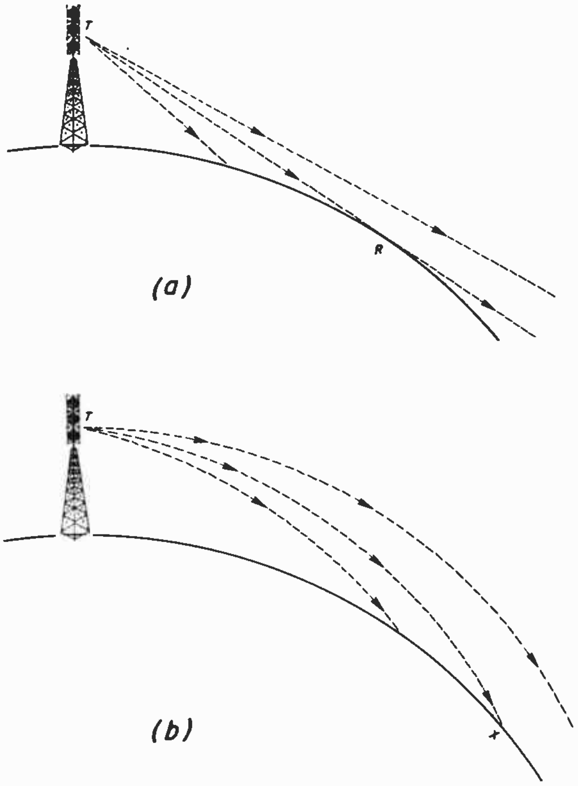

Fig. 21-10

Fig. 21-10 (a) shows the path of a beam of radio waves without refraction. Note that they all travel in straight lines, and that the longest distance of reception lies on the line *TR*, which passes through the horizon. The path of radio waves affected by refraction is shown in Fig. 21-10 (b). In this case, waves which might miss the earth entirely if it were not for refraction, are bent back to the earth and make possible a greater distance of transmission, *TX*. It is possible to estimate the possible television transmission distance by the use of the following formula, which takes refraction into account but assumes a perfectly smooth earth and standard atmospheric conditions:

$$D = 1.41\sqrt{H_T} + 1.41\sqrt{H_R}$$

where D = transmission distance in miles, H_T = height of transmitting antenna (above sea level) in feet, and H_R = height of receiving antenna (above sea level) in feet. Let us try a simple example to see how this works out. Assume a television transmitting antenna to be mounted atop the Empire State Building, 1250 feet high, and a receiving antenna to be 100 feet high (both above sea level). Find the maximum possible transmission distance.

$$D = 1.41\sqrt{1250} + 1.41\sqrt{100}$$

$$D = 1.41 \times 35.4 + 1.41 \times 10$$

$$D = 50 + 14.1 = 64.1 \text{ miles}$$

This means that under ideal conditions the transmission distance should be about 64 miles. However, ideal conditions are seldom met, and the actual transmission distances will depend to a large extent upon individual terrain conditions. The formula given above is of some use though in estimating *maximum* reliable transmission distance when the type of terrain is known.

Reflection. – One of the major problems of television reception, that of ghost reception, is largely due to the effects of reflected waves. We are all familiar with the reflection of light from a mirror and other reflecting surfaces. A similar effect of reflection is encountered with radio waves. As the waves travel close to the surface of the earth, they encounter various objects such as buildings, bridges, towers and mountains. If such objects are an appreciable part of a wavelength in size, they will cause reflections to take place. Reflections may occur at any frequency, but are much more serious at television frequencies than at standard broadcast frequencies, due to the shorter wave lengths at higher frequencies.

Let's see how this works out. The center of the broadcast band is about 1000 kilocycles. The wavelength at 1000 kilocycles is 300 meters which is about 1,020 feet for a full wave. There are not too many objects of such large size in the average locations, so that reflection in the broadcast band is not too severe, except possibly in the downtown areas of large cities.

Now let's compare this with television wavelengths. Take Channel 7, for example, which begins at 174 megacycles. This is equivalent to about 1.7 meters, which is above 5.8 feet. It is easy to see that practically anything will act as a reflector at this frequency. Because of this, it may often be difficult to secure pictures without ghosts in many locations. There are cases, particularly when an indoor antenna is used, when the location of parked cars may make a great difference in television reception. This is because the cars act as efficient reflectors, and may cause reinforcement or cancellation of the signal arriving at the television antenna.

Occasionally, reflection works to our advantage. In many downtown areas, it is common practice to aim the television antenna to pick off a reflected signal from a tall building instead of trying to receive the direct signal, which may be weak.

Shadow Areas. – Because tall buildings make such efficient reflectors at television frequencies, it is often found that a so called *shadow* area, where signal strength is low, exists behind such buildings, on the side away from the transmitter. It may well be that standard broadcast reception will be perfectly normal in a television shadow area. This of course is due to the fact that at broadcast frequencies the building may only be a small fraction of a wavelength high, while at television frequencies it may be many wavelengths high. The effectiveness of the building as a reflector increases when it becomes a number of wavelengths high, so that at broadcast frequencies it may be a very poor reflector, while at television frequencies the building will be a highly efficient reflector.

Reception may often be obtained in shadow areas by utilizing the reflected waves from other buildings. Shadow areas may also be found behind large hills and mountains which effectively block the signal. Under such conditions it may be that the only way to provide reception in the shadow would be to install some sort of antenna on top of the hill which would act as an intermediate radiator and re-radiate the signal down into the shadow area. This is a rather extreme case, but a possible solution in mountainous regions.

Diffraction. – There is another type of bending of electromagnetic waves known as *diffraction*. We previously spoke of shadow areas behind large buildings and mountains. Careful measurements have shown that these shadows are not as complete as they should be, according to the simple geometry of the situation. It has been determined that the waves actually bend around the intervening objects and tend to fill in the shadow, thus:

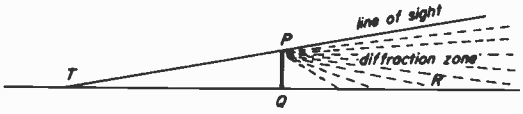

Fig. 21-11

The amount of filling in depends upon the frequencies involved. At the broadcast band the filling in is usually pretty complete. However, at television frequencies the effect is practically negligible except in certain special cases. We are not going to take up any more time here discussing diffraction because it is of little importance in television. You should know just enough about it though, to keep from getting it mixed up with things like refraction and reflection.

Polarization. – We have previously discussed polarization, and we know that the polarization of a radio wave is determined by the plane of its electric field. This in turn is determined by the physical position of the antenna with respect to earth. It is interesting to note that standard broadcast stations use vertical antennas, providing vertical polarization, while television stations use horizontal antennas, providing *horizontal polarization.* As you might guess, there are very good reasons for this. At standard broadcast frequencies, the transmitting and receiving antennas are invariably less than a wavelength above the earth. Under these conditions it is found that vertical polarization provides greater signal strength at the receiving antenna than horizontal polarization. Even at very high frequencies, vertical polarization provides better results than horizontal, as long as the antennas are less than a wave-length above the ground. An example of this is the case of communication between two mobile units such as police cars or fire engines, where the antennas are usually a few feet above ground. If you ever observe the antennas on police cars you will notice they are always vertical.

With television broadcasting, the situation is quite different. The transmitting antenna is generally located high above the surface of the earth on a tall building or special tower. This places it many wavelengths above the ground, instead of a fraction of a wavelength, as in standard broadcasting. Then too, the television receiving antenna itself may be several wavelengths above the ground. Under these conditions, it is found that horizontal polarization is favored over vertical polarization. One of the primary reasons for the choice of horizontal polarization in television is that it provides a better signal-to-noise ratio at the antenna heights involved. Another advantage of horizontal polarization is the relative ease of obtaining satisfactory receiving antenna directivity patterns. This would be much more difficult if vertical polarization were used. There are various other incidental advantages, which we need not discuss.

The important thing to remember is that *television signals are horizontally polarized.* Remember that this means the alternating electric field at the receiving antenna is in a horizontal direction, and at right angles to the direction of propagation, while the magnetic field lines are vertical. This fact is essential to understanding why a television antenna picks up a signal at all, and why it picks up best when it is oriented broadside to the signal source.

TRANSMITTING AND RECEIVING ANTENNAS.

21-5. In Lesson 6, we discussed the properties of antennas in general. In this lesson, we are going to investigate in more detail the electrical behavior of antennas, and try to find out what makes them tick. It is consoling to note that in general the theory of operation of transmitting and receiving antennas is the same, so we don't have to tackle two different theories. For example, if a certain current and voltage distribution exists on a resonant center-fed antenna used for transmitting, the same distribution will appear when this antenna is used for receiving. (The actual *magnitudes* of current and voltage will be much less for the receiving antenna). If a transmitting antenna has an input impedance of 72 ohms at a particular frequency, then this antenna would also have an impedance of 72 ohms as a receiving antenna at the same frequency. Thus we see that transmitting and receiving antennas do have a lot in common.

Directivity. – The first thing we are going to investigate is what makes an antenna directional. Why should an antenna receive and transmit best from certain directions?

Let us first look at the conditions existing in a resonant dipole. Incidentally, if you will remember, we said in Lesson 6 that a dipole had a certain "best" frequency at which it provided the most signal to the receiver. Now that we are further along in the course we will speak of this as the *resonant* frequency of the dipole. You are already familiar with resonance from your study of tuned circuits. As we said before, when a dipole is an electrical half wavelength long, it is resonant. The current and voltage distribution of a resonant dipole looks like this:

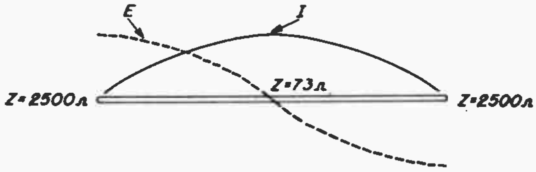

Fig. 21-12

This type of graph is called a "standing wave" pattern, which you have become familiar with from

Lesson 20. As a matter of fact this is the same type of pattern, you will see on an open circuited half-wave transmission line. Note that the current is a *maximum* at the *center* of the antenna and reduces to a minimum value at the ends. Conversely, we find that the voltage is *maximum* at the ends and *minimum* at the center.

Electrical impedance, we have learned, is the ratio between the voltage and current at any point, $Z = \frac{E}{I}$. This also gives us a method of determining the impedance at any point along an antenna. Simply take the ratio of the voltage to the current at the desired point, and you have the impedance at that point. Let's see how this works out. If we look at the center of the resonant dipole we find that the voltage is low and the current is high. The ratio of voltage to current and therefore the impedance, must be low. Theoretically, this value of impedance at the center of a resonant dipole is 73 ohms. Practically, it is less, due to the effects of nearby objects. At the ends of the resonant dipole the opposite condition prevails. That is, the voltage is high and the current low. This makes for a *high* ratio and therefore a high impedance. We will find that the impedance at the ends of a resonant dipole may be in the order of 2500 ohms.

Now that we have seen the distribution of current and voltage, let's get on with the business of why a dipole has directivity. In order to simplify this, we are going to be concerned with the magnetic fields at the moment. (The electric fields are also present, being produced by the magnetic field.) From the figure above (21-12), we have seen that the current is maximum at the center and drops off toward the ends. The strength of the magnetic field is directly proportional to the current, and so is maximum at the center, and minimum at the ends of the dipole. We will represent the relative strengths of the magnetic fields by lines of force as shown here:

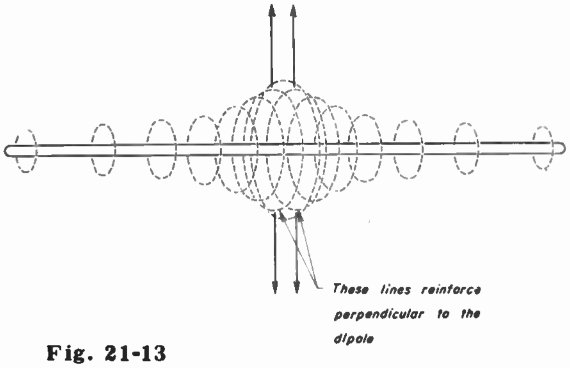

Fig. 21-13

Note carefully that at the center of the dipole, where the magnetic field is strongest, we have the greatest *concentration* of lines of force; while as we go out toward either end of the dipole the lines tend to thin out due to a smaller current value. Lines of force about the center of the dipole, which have a high concentration, tend to force the adjacent lines of force *away* from the center, and out toward the ends. However, the lines of force which are near the exact center are balanced by the total forces on either side, and therefore cannot move sideways along the dipole, but must move straight out in a direction perpendicular to the plane of the dipole. These centrally disposed lines are in phase, and meet out in space at distant points where they reinforce each other, as shown in Fig. 21-13.

Since these are the lines of force of greatest strength it follows that the radiation (or reception) of our dipole will be maximum in any direction perpendicular to the plane of the dipole. Remember, though, that the only lines of force that move straight out in this manner are those right near the center. Lines of force to either side of the center experience a side force also, which tends to move them out toward the ends of the dipole. However, as they are moving to the side, the lines are also expanding, so that the net motion will be at intermediate angles, as shown here:

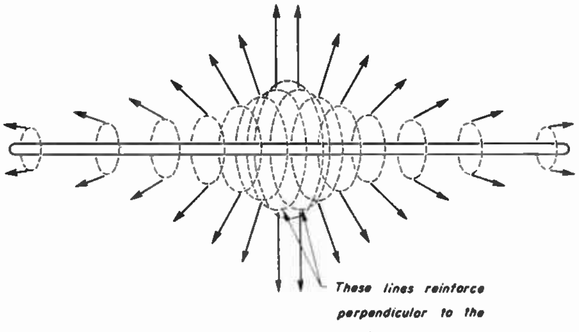

Fig. 21-14

You can see that as we go toward the ends of the dipole the resultant motion of the lines takes on a more sideways direction. From this diagram you can appreciate why the strength of the radiation pattern falls off as the angle leaves the perpendicular. The only radiation reaching these other angles is radiation with sideways component, and the only lines so affected are those which are less concentrated or weaker than the lines at the center. Therefore, radiation in such directions must necessarily be weaker than perpendicular radiation. At angles far off the perpendicular, only the relatively weak fields are effective, so very little radiation takes place in this direction.

We know that practically zero radiation takes place off the ends of the dipole. This can be explained from two viewpoints. First of all we know that as some lines of force move with a side component they are also rapidly *expanding*. This rapid expansion leaves us with what amounts to a blank cone shaped area in which no lines of force exist. Another way to look at this is from the point of view of the receiving antenna. Let's take a look at this end view of the transmitting dipole, with two receiving antennas:

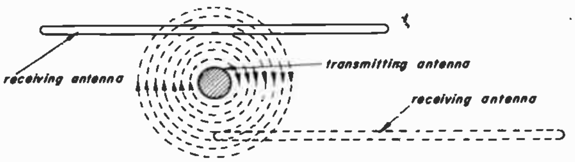

Fig. 21-15

Let's first look at the receiving antenna drawn with *solid* lines. Consider that the lines of force are coming out of the page toward you, and expanding as they come. The direction of the circular lines of force is clockwise, as shown by the arrows. However, all of the arrows to the *right* of the transmitting dipole are pointing *down,* while all of the arrows to the *left* are pointing *up*. This means that the lines of force cutting each half of the receiving antenna are in *opposite* directions. We can interpret this as meaning that equal and opposite voltages are induced to the receiving dipole and, therefore, the resultant induced voltage is zero. We can conclude then, that there will be no reception from the ends of the transmitting dipole.

On the other hand take the case of the receiving antenna shown in dotted lines in Fig. 21-15. Note that the lines of force cut this antenna in *one* direction only. No cancellation will take place and a net voltage will be induced in the receiving antenna.

An intermediate location of the receiving antenna is possible. This is the condition in which the lines of force cut the receiving antenna in opposite directions, but *not* in equal numbers, In a case like this, the net induced voltage will be a function of the *difference* between the lines of force cutting in both directions. The polarity of the resultant induced voltage will depend upon the larger number of lines cutting the receiving antenna. We can now appreciate why no radiation takes place off the ends of our dipole, and also radiation is maximum in the perpendicular directions, and decreases as the angles approach a parallel to the dipole.

The Dipole as a Tuned Circuit. – If a half-wave resonant dipole is fed at the center, and the exciting frequency is varied above and below the resonant frequency, it will be found that the dipole exhibits properties similar to a series resonant circuit. That is, if we feed the dipole at the center with the resonant frequency, say 100 megacycles, we will find that the current and voltage at the input terminals will be in phase, as in series resonance. We will also find that the *magnitude* of current will be a maximum compared to the current at frequencies on either side of resonance. If we lower the input frequency, say to 90 megacycles, we find the current is not only lower than at resonance, but actually *leads* the voltage. In other words, below the resonant frequency, the antenna exhibits a capacitive reactance. This again is the same as the action of a series resonant circuit. Now, if we raise the input frequency *above* resonance, say to 110 megacycles, we find once again that the magnitude of current is lower than at resonance. Not only that, but, the current at the input terminals now lags the voltage and the antenna looks like an *inductive* reactance. It is not too difficult to conceive of a dipole as being a tuned circuit since it actually is made up of capacitance, inductance and resistance, as shown here:

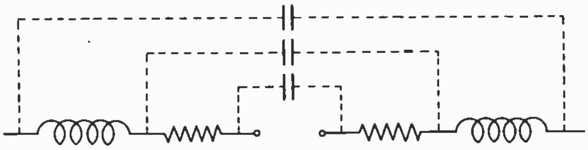

Fig. 21-16

Capacitance exists between various points of the dipole, as shown in the figure. This is so because any two conductors (or portions thereof) separated by a non-conductor form a condenser. The non-conductor in this case is air. Thus we form the idea of the antenna having capacitance, this being one of the requirements for a tuned circuit. The dipole has inductance simply by virtue of the fact that it is a conductor in which current is flowing. This idea is not altogether foreign to you since in Lesson 17 you were introduced to the idea of inductance in coils, and Lesson 18 explained the inductance of a straight wire.

Resistance of the Dipole. – In common with ordinary tuned circuits, a dipole has resistance. This resistance causes energy to be dissipated in the form of heat, which is wasted as far as radiation is concerned. Do not confuse this heating resistance with the radiation resistance we have already discussed. The *heating* resistance of a dipole is made up of two parts: (1) the ordinary d-c resistance of a dipole is made up of the wire (or rod) and (2) the "skin-effect" of a-c resistance previously discussed in Lesson 20. Of the two, it is generally found that the a-c resistance is of greater importance. Television antennas are constructed of large-diameter conductors which greatly minimizes their resistance, so that for our purposes this effect can be completely neglected.

Standing Waves. – In Lesson 20 we discussed at length the production of standing waves on a transmission line. We saw that a standing wave was the resultant wave caused by the addition of the incident (original) and reflected waves. The same effect occurs on an antenna. In fact, the standing wave pattern on a half-wave dipole looks exactly the same as the pattern on a half-wave open ended transmission line. We know that in general we want a very small standing wave ratio on transmission lines. This is because we want minimum losses due to radiation from the lines. A transmission line should be a conductor of energy, and as such is not required to radiate.

The requirements are, of course, vastly different for an antenna. An antenna for either transmitting or receiving should have the largest possible standing wave ratio at the desired frequency. Let us see why this is so. The transmitting antenna has a radiation field, and the magnitude of this field depends upon the magnitude of current in the antenna. The more current in the antenna, the stronger the field, and the greater the distance of transmission. However, to have a large current value also means a large current standing wave ratio, since this ratio is between the maximum and minimum current points on the antenna. Thus, when a strong radiation field is desired from a transmitting antenna, a large standing wave ratio is necessary. The same requirement is found for a receiving antenna. To provide maximum signal voltage to the input terminals of the receiver it is first necessary that a strong signal appear upon the receiving antenna. This calls for large standing wave ratios of voltage and current.

Length of the Dipole. – We saw in Lesson 6 that a dipole has a certain "best" frequency, or resonant frequency, at which it is capable of delivering the most signal to the receiver. We learned also that at frequencies on either side of resonance the amount of signal decreases. Actually, the transmission line has an effect on this, and we shall discuss its part later on. For now we will just consider the resonant dipole alone, and see how it reacts at resonance and also at frequencies on either side of resonance.

Let's take the resonant condition first. A dipole is operating at its resonant frequency when its *electrical* length is equal to one-half wavelength at the operating frequency. We say electrical length because the actual physical length is somewhat *shorter*. This slight shortening of the physical length is mainly due to "end effect", which is produced by the capacity of the ends of the dipole to surrounding objects. As you might expect, end effect increases as the diameter of the antenna increases, and this in turn shortens the physical length of the antenna. For the average antenna used in television reception it may be said that the physical length of the antenna is about 5 percent less than the electrical length. A simple formula to calculate the physical length of a television receiving antenna is:

$$L = \frac{468}{\text{Frequency in megacycles}}$$

Where L is the physical half wavelength in feet.

As an example, let us find the length, in feet, of a resonant dipole at 100 megacycles:

$$L = \frac{468}{100} = 4.68 \text{ feet}$$

It must be realized that this formula is only approximate, since end effect varies with frequency, diameter of the antenna and surrounding objects. However, for practical purposes the formula will usually be satisfactory.

STANDING WAVES ON THE DIPOLE ANTENNA

21-6. We may consider that a half-wave dipole is a quarter-wave transmission line which has been opened up. Here is a quarter-wave transmission line showing the standing wave pattern:

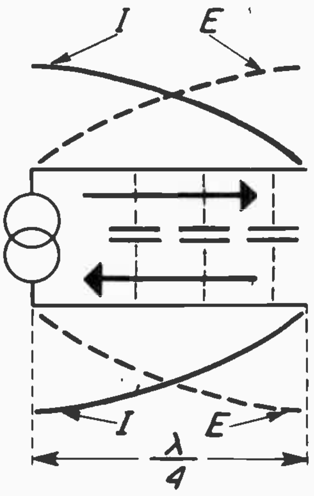

Fig. 21-17

The standing wave of voltage is shown by the dotted lines and is seen to be a *maximum* at the *open* ends and a *minimum* at the *generator.*

The standing wave of current is shown in solid lines and is seen to be a *minimum* at the open ends and a *maximum* at the generator. The wires are so close together, however, that their capacity to each other forms a closed circuit, which prevents energy from escaping into space. Thus we see that a transmission line section, while ideal for its own purposes, makes a poor radiator. Now let's open up this quarter-wave transmission line as shown here:

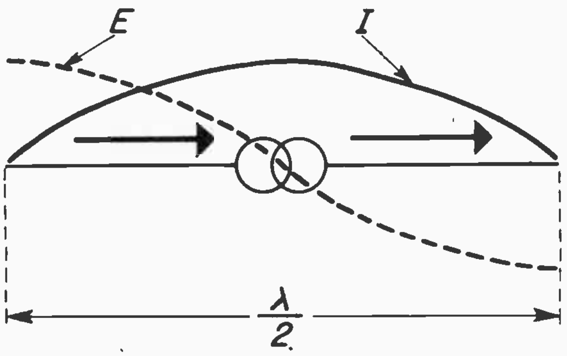

Fig. 21-18

Opening up the line produces the half-wave dipole shown in the figure. Notice first the effect on the direction of current as shown by the arrows. Opening up the line has made current in both halves flow in the same direction, thereby eliminating the cancellation we had before and permitting the wire to radiate. The standing wave of current still has the same properties as before — maximum at the generator and minimum at the ends. Also, the standing wave of voltage has the same properties, maximum at the ends and minimum at the generator.

We have now seen how a half-wave dipole seems to develop logically from a quarter-wave transmission line. Let's go ahead and see how these standing waves of voltage and current are formed on a half-wave resonant dipole.

For the sake of simplicity, let us disregard such factors as end effect and consider that the physical length of the half-wave dipole is exactly the same as its electrical length. We also consider that the velocity of propagation of voltage and current waves along the dipole is the speed of light. Keeping all this in mind, let's examine the operation of the resonant dipole with the aid of this figure:

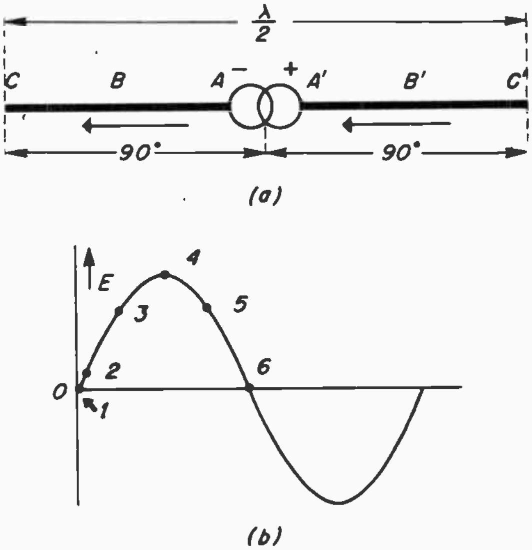

Fig. 21-19

The generator shown connected to the center of the dipole represents a source of radio frequency energy. The dipole is a good conductor, and as you previously learned, a movement of electrons takes place in a conductor under the influence of an applied voltage or electric field.

One thing must be thoroughly understood at this point, and that is the fact that the movement of electrons in a wire does not take place instantaneously in all parts of the wire. This is usually of no importance in conventional wiring of circuits but is a vital factor in determining the operation of antennas. The impulse or wave by which electrons are set in motion travels down a wire at the speed of light. This is 300,000,000 meters per second or about 186,000 miles per second. An antenna length is always an appreciable portion of a wavelength. This means that electrons moving near the end of the wire are not necessarily in phase with the movement of electrons at the generator. We will find this to be true as we proceed further along.

When the generator voltage is zero, no action takes place along the dipole, assuming that we are just starting. A very short time later on, let us assume that the instantaneous output of the generator is such that its voltage is a little above zero, as indicated by point 2 in Fig. 21-19 (b).

If you will remember, the direction of electron flow through a generator must be from plus to minus, so this sets the direction of current flow for the entire dipole, as shown by the arrows in Fig. 21-19 (a). At the instant the generator voltage rises, electrons at point A and A' are impelled to the left. However, electrons at other points such as B and C do not "feel" the effect of the moving electrons until later, because it takes a definite time for the electric impulse to travel down the dipole. The first electrons at point A cause the next electrons to start moving and so on, so that some time later, an electron at point C will receive a kick. This is somewhat analogous to the case of a line of billiard balls where the cue ball hits the first ball and a short time later, the last ball on the line leaves its position. Point C is at the end of the dipole which means that it is ¼ wavelength, or 90 degrees, away from point A.

Electrons arrive at Point C 90 degrees later than the original impulse left point A. But point C is a "dead end." The electrons cannot pass through the end of the dipole. This causes an excess of electrons that produces a small negative charge at point C. Electrons at point C (due to the atomic structure of wire) are exerting a repelling force on these intruders, and would like to send them back where they came from. However, they cannot go back yet. Why not? Because, don't forget that the generator has not been idle all this time. It has been continuously rotating, and a short interval after the first electron left, the generator was putting out a still higher voltage, and additional electrons started toward point C. Thus, while the original electrons would like to return, they cannot, because piling up right behind them like a traffic jam are more electrons. This further increases the negative charge at point C. Note also that the rate at which the charge at point C is building up is the same rate at which the generator has built up. That is, the charge at point C is varying sinusoidally. This "traffic jam" at point C continues to build up under the influence of a higher and higher generator voltage, and the negative charge at point C likewise continues to build up. You may recognize this process as being similar to charging a condenser, for that is precisely what is happening. The other side of the dipole is becoming positively charged, but we'll talk about that later.

There is one thing you must keep straight and this is that there is an actual *time lag* between the time the generator exerts a certain force at its terminals and the time this force affects other portions of the dipole. Let's try and figure this out. Point C is 90 degrees (¼ wavelength) from point A. This is the same as ¼ cycle of generator output. By the time an electron leaves point A and reaches point C (90 degrees later) the generator has progressed ¼ cycle. Assuming the first electron started moving at point 1 of the cycle in Fig. 21-19 (b), the generator would be at point 4 (maximum) which is ¼ cycle more advanced. Make sure you understand this. It may be a little tough to get, but it is extremely important. By the same token then, the maximum charge due to point 4 of the generator does not *reach* point C until the generator has progressed *another* ¼ cycle and is at point 6. But point 6 is a point of zero voltage at the same time that point C is a point of maximum voltage. This leads us to the conclusion that the voltage at points A and C are always 90 degrees out of phase. This is also true with respect to point A' and C'.

Let's see where we are now. The maximum negative charge has just reached point C. But this is being followed by a lesser negative charge produced by *decreasing* generator voltages such as that at point 5. The highest charge followed by a lesser charge now allows the highest charge to be repelled *back toward the generator*. We have a rather unusual situation now because the electrons are attempting to move in *two* directions at once. Now we have a repelled or "reflected" wave of electrons moving toward the generator, but we also have the original or "incident" wave of electrons still moving toward the negative end of the dipole to the left. This condition is illustrated in Fig. 21-20:

Upon reflection from the end of the dipole, the maximum negative charge begins moving toward the generator. It arrives at the generator 90 degrees (¼ cycle) after it has started out. If we add to this the extra 90 degrees needed to go originally from the generator to the end of the dipole, we see that when the charge returns to the exact center of the dipole it is 90 plus 90, or 180°, out of phase with the generated voltage. This would lead us to believe that the voltage at the generator terminals will be zero. This is not entirely true since the phase difference at the terminals is not exactly 180 degrees, but is somewhat less. However, we can say that at the center of the dipole the voltage will *always* be a minimum value. At the ends the voltage will vary sinusoidally from zero to maximum positive to zero to maximum negative, and so on. At points between the generator and the ends, the phase difference between the incident and reflected voltage waves will vary from 180 degrees out of phase at the generator, to *in phase* at the ends. This accounts for the gradual decrease in the amplitude of the standing wave of voltage as we go from the ends toward the generator.

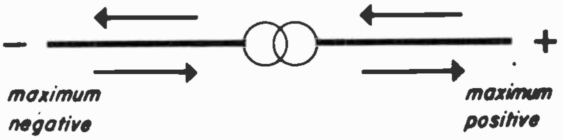

Fig. 21-20

We have been devoting all our time to discussing conditions on the left side of the dipole, in order to avoid undue complications. The action taking place in the other half is similar. The movement of electrons in both halves is always in the same direction, and the timing is the same. The main difference is in polarity. While electrons are busy piling up on the left end of the dipole, creating a negative voltage, they are just as busy leaving the right end, creating a positive charge. Thus we see that the two opposite sides of a half-wave dipole are always *opposite* in *polarity*.

We have just seen that a standing wave of voltage is created by the accumulation of charges along the antenna, adding at some points and cancelling at others. Let us now find out how the standing wave of current is created. Current, remember, is the *rate of movement* of charges. The current travels to the end of the dipole, being pushed by the voltage of the generator, and requires 90 degrees or ¼ cycle to reach the end. At the end of the dipole the current stops and reverses, thereby providing an additional phase change of 180 degrees out of phase at the end, since this is the point of reversal. Thus, we conclude that the current at the ends of a half-wave dipole is *always zero*. Thus far, the current at the end is 90 plus 180, or 270 degrees (¾ cycle) out of phase with the generator current. However, it requires an additional 90 degrees to return to the generator. This makes a total of 360 degrees, or one full cycle, and indicates that at the generator the reflected and incident waves are *in phase* and therefore *add*. This produces the condition of a maximum value at the generator for the standing wave of current. Between the generator and the ends, the phase difference between incident and reflected current waves varies from in-phase to 180 degrees out of phase. This accounts for the gradual decrease of current standing wave amplitude going out toward the ends.

Note that at the generator, where the current standing wave is maximum, the voltage standing wave is always minimum. This condition indicates that the standing waves of voltage and current on the dipole are 90 degrees out of phase. This is not too surprising, since we found the same conditions existing on a transmission line.

Dipole Longer Than a Half Wave. —Television antennas seldom have the opportunity to operate solely at their resonant frequency due to the extremely wide band of frequencies which must be covered by a single length of antenna. A dipole behaves differently at frequencies other than resonance Its impedance and directional pattern, as well as the amount of signal delivered to a receiver vary at different operating frequencies. Let us first take the case of a dipole which is a bit longer than resonance. The standing pattern of such an antenna looks something like this:

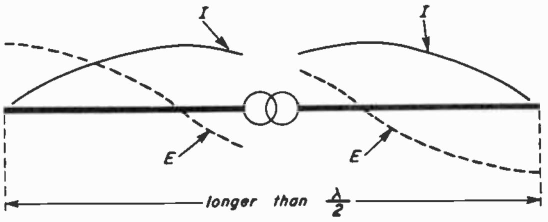

Fig. 21-21

Note that the current is still zero at the ends while the voltage is still maximum. This is always true regardless of the length of the antenna. However, due to the greater length of travel up and down the antenna, conditions at the generator are somewhat different. The *current* at the generator is no longer maximum but has a lesser value.

There are now *two* current maxima. Also, the *voltage* at the generator is no longer minimum but has a higher value, and there are *two* voltage minima.

The *impedance* at the generator is now greater than 73 ohms because the ratio of $\frac{E}{I}$ is greater than at resonance. For example a dipole ¾ of a wavelength long may have an input impedance of 700 ohms for a certain diameter conductor. This impedance is actually a combination of resistance and inductive reactance. This differs from a resonant half wave dipole where the input impedance of 73 ohms is all purely resistive. This input impedance continues to rise as the antenna is made to approach a full wavelength, where it may become about 3400 ohms.

This change in impedance is very important because it means that if you have a television dipole cut to channel 2 and matching a 300 ohm line, the antenna impedance varies continuously as the frequency increases, and thus the line is being continuously mismatched in varying degrees. This in turn means that the amount of signal fed to the receiver is also varying and as you know, makes it difficult to have a single antenna work well on all channels.

When the antenna is greater than a full wavelength long, the impedance again begins to decrease and falls to the minimum value of about 73 ohms again when the antenna is 1½ wavelength long. A television antenna cut for channel 2 (54 to 60 mc) would again be resonant at channel 7 (174 to 180 mc) where it would be 1½ wavelengths long. Thus the antenna matches and mismatches the lines at different channels and thereby delivers varying signal strengths to the receiver, even though the pickup on the antenna may be the same.

A brief summary of the impedance characteristics of a dipole increasing in length from a half wave is as follows. At a half wavelength the impedance is 73 ohms (resistive) and the dipole is resonant. From a half wave to a full wave antenna the impedance rises to a maximum value. From a full wave to a 1½ wavelength dipole, the impedance drops again until at exactly 1½ wavelengths, the antenna is again resonant and the impedance is in the order of 73 ohms. This same procedure continues in increments of half-wave increases in length of the antenna.

Dipole Shorter Than a Half Wave. – The standing wave pattern of a dipole that is a bit shorter than a half wavelength may look like this:

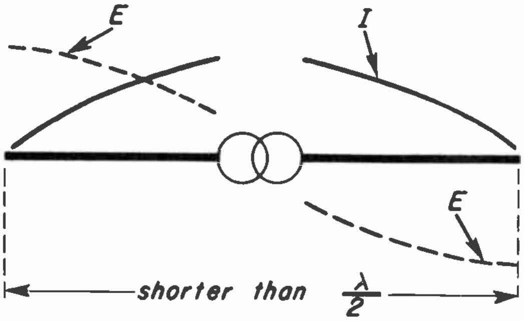

Fig. 21-22

Even in this case, at the ends of the antenna the voltage is maximum and the current minimum. However, due to the non-resonant condition we find that the voltage at the generator is not minimum but is some higher value. Also, the current at the generator does not reach its maximum value. While the impedance of the antenna increases as the length decreases from a half wavelength, it becomes purely capacitive reactance when the length is less than a quarter wave. At this time the resistive component of the impedance becomes zero. This may well account for the fact that a television antenna does not work well below its resonant frequency (see Lesson 6), but does work above the resonant frequency, where a resistive component of the antenna impedance is always present.

ANTENNA ARRAYS

21-7. In many cases, a simple dipole is not satisfactory for use as a television receiving antenna. It may not have sufficient gain for a particular area, or it may not be able to discriminate against ghost reception due to reflections. In such cases, one or more additional elements may be added, to improve the performance of the simple dipole.

Reflectors. – One of these additional elements is called a *reflector*. A reflector is an unbroken dipole slightly *greater* than one-half wavelength long (about 5 percent) which is placed *behind* the dipole as shown in Fig. 21-23.

Note that there is no electrical connection between the reflector and any other portion of the antenna system. Let's see briefly what a reflector does.

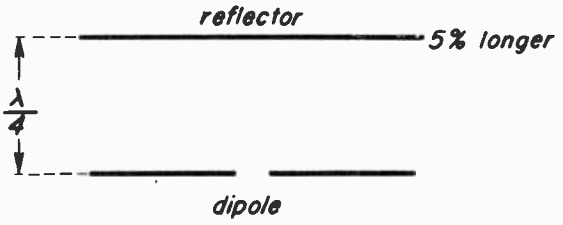

Fig. 21-23

Suppose we take a resonant half-wave dipole and suspend it in space, unbroken at the center, and not connected to anything. This dipole will pick up signals from an area in its immediate vicinity. Since we have no load connected to the dipole, practically *all* of the energy will be re-radiated. Let us now break the dipole in the center and connect there a resistive load equal to the dipole impedance (about 73 ohms). Now, we will find that half of the energy on the antenna will be absorbed by the load while the other half will be re-radiated. The best we can do with a simple dipole which is perfectly matched is to make *half* of the total energy available to a receiver. This assumes perfect matching conditions, which, seldom exists in television reception.

If it were possible to make use of some of the re-radiated energy, the gain of the dipole could be improved. One method of doing this is by means of the reflector. The reflector is usually spaced behind the dipole a quarter wavelength or less. In television receiving antennas, the spacing is usually not much less than one-quarter wavelength since close spacings reduce the bandwidth of the antenna.

The reflector, being situated in the immediate vicinity of the dipole, picks of some of the energy that was re-radiated from the dipole. Having no load, the reflector re-radiates practically all of the energy it picks up. The re-radiated energy from the reflector goes out in all directions and some of this is picked up by the dipole. You can see that the dipole is receiving energy from two sources, the transmitting station and the reflector.

You have learned previously that to be *additive*, the energy from the two different sources must arrive *in phase*. It does not have to be perfectly in phase to add, but there must not be too great a phase difference. The phasing can be adjusted by changing the physical spacing between the dipole and reflector, and by changing the length of the reflector. Since the reflector is initially longer than the dipole, it has an *inductive* reactance. Making it still longer, makes it more inductive and increases its phase angle. Thus a means of "tuning" is provided.

Since the reflector acts to return some "lost" energy to the dipole, in effect it increases the *gain* of the antenna. This increase of gain in the forward direction is obtained at the expense of pickup from the back. However, as you already know, this is nothing to be unhappy about since this helps reduce the effect of ghosts and other interfering signals arriving from the rear of the antenna.

The dipole-reflector combination is a fairly broadband device and this is due to a sort of "self-compensating" action. The antenna is designed originally for the *low* end of the television band. As the frequency increases, the spacing between dipole and reflector in terms of a wavelength increases and tends to reduce the effect of the reflector. However, the effective wavelength of the reflector is now also greater and this produces a phase shift which partially compensates for the effective increase of spacing. Thus, the effectiveness of the reflector is maintained over a fairly wide band of frequencies.

Directors. – Somewhat similar effects can be obtained by the use of a so-called *director*. This is an element *shorter* than a half wavelength that is placed in *front* of the dipole. Being shorter, it has a *capacitive* reactance. The director is not too useful in building a broad band television antenna. This is so because television dipoles are cut for the low frequency side of the band and directors lose their efficiency rather quickly as the frequency increases. As the frequency goes up, the director becomes resonant and then inductive so that it may actually act as a reflector at higher frequencies.

In fringe areas, a dipole may be used in conjunction with a reflector and one or more directors to provide high gain. However, this is obtained at the expense of bandwidth and such an antenna may be good on only one or two channels.

An array with directors and a reflector that can be useful in fringe areas is the so-called Yagi antenna. A 4-element Yagi is shown in Fig. 21-24 on the next page.

This antenna consists of a folded dipole, a reflector and two directors. Ordinarily, a high gain antenna like this would have such a narrow bandwidth that it could not pass the 6 mc band for one TV channel. However, by efficient spacing of the elements and special construction of the folded dipole, satisfactory bandwidth is obtained. If you will look at the folded dipole element in Fig. 21-24, you can see that its unbroken rod has a considerably greater diameter than the other rod. This construction raises the impedance of the folded dipole and increases its bandwidth.

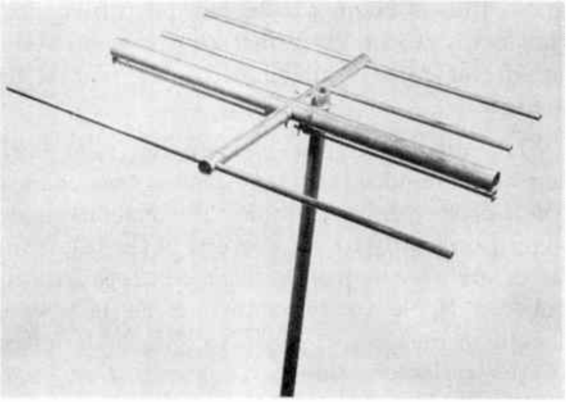

Fig. 21-24

The Yagi array in Fig. 21-24 has a relative gain of 4.3 db over a standard dipole on the channel for which it is cut. The bandwidth of the antenna is about 10 mc on low frequency TV channels and 20 mc on the high-band channels.

Stacked Antennas. – A simple dipole or folded dipole picks up signals from a certain small area in its vicinity. A greater amount of signal may be picked up by erecting additional antennas, one above the other. This procedure is known as "stacking". In effect, we are filling up more of the space containing electromagnetic waves, with intercepting wires. If two similar antennas are stacked, the area of interception is doubled and the amount of received power will be doubled. This represents an increase of pickup voltage to 1.414 times the original, since voltage varies as the *square root* of power. An antenna consisting of two stacked folded dipoles is shown here:

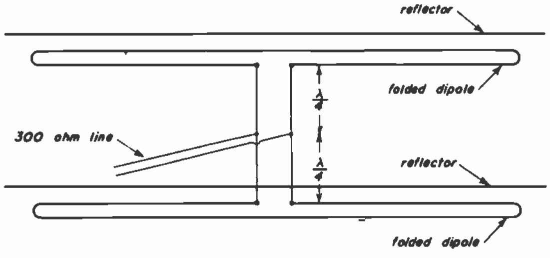

Fig. 21-25

In order to take full advantage of the increased voltage (1.414 times), it is necessary that the two folded dipoles be correctly connected together and properly matched to the receiver transmission line. One method of doing this is shown in the figure. If the reflectors used behind each folded dipole have a spacing of about 0.2 wavelength, the input impedance of each folded dipole will be about 170 ohms. When these two antennas are connected together, their impedances are in parallel and would present a total impedance to the transmission line of about 85 ohms. This is not a good match to a 300 ohm transmission line, so a matching arrangement is provided. The two folded dipoles are stacked about one-half wave apart. Halfway between the two, is of course, a quarter wave. We can make each of these quarter wave sections act as a "Q" matching section, which we will discuss later. Let's see what has to happen.

We have two impedances (antennas) which must be connected in parallel to a 300 ohm transmission line. It follows, then, that the transmission line "looking" back into the antennas must "see" an impedance equal to 600 ohms in the line to each individual antenna, since the two in parallel will then equal the desired matching impedance of 300 ohms. By means of the "Q" section formula (given in Lesson 20) we determine the impedance of the Q sections to be about 320 ohms, which is the geometrical mean of 170 and 600. In practice 300 ohms should be satisfactory. Each antenna is correctly phased, since the signal from each one travels the same distance (¼ wavelength) to reach the transmission line.

ANTENNA IMPEDANCE MATCHING

21-8. In previous lessons it has been stated that for maximum power transfer from a generator to a load, it is necessary that the load impedance match the generator impedance. This is always true, regardless of what constitutes the actual generator or load. In our case, the generator consists of a receiving dipole, while the load is the transmission line and the receiver input. In most receivers, the input impedance of the receiver will be either 72 or 300 ohms. Let's just stick to the 300 ohm case to avoid complications at this time. Assuming the receiver input to be 300 ohms, then, it is necessary to feed the receiver through a 300 ohm transmission line. This matching of line to receiver, prevents standing waves from appearing on the line, which in turn assures maximum power transfer from line to receiver and also the elimination of ghosts due to line reflections.

Since we have chosen a 300 ohm line to connect the receiving antenna, it seems logical to assume that the antenna impedance should also be 300 ohms. It is logical all right, the only trouble is that you can't do it. At least not for more than a very narrow band of frequencies. As you already know, the impedance of a dipole varies widely for frequencies off resonance. In the lower frequency television channels (2 to 6). the simple dipole antenna will match a 300 ohm line only once and that within a narrow frequency range. This will probably occur somewhere around channel 3 or 4. This means that the dipole antenna will approach a match to the 300 ohm line, starting from about 60 ohms at channel 2. After channel 3 or 4 the impedance of the antenna becomes greater than 300 ohms, reaching a maximum value at about 90 mc, which is not in the TV band. Thereafter, the impedance begins dropping again and reaches a minimum value at about 160 mc, just below the high-band TV channels. At channel 7 the impedance rises to about 200 ohms, It then rises to a peak of about 300 ohms at channel 12 and again drops to a minimum of about 100 ohms at channel 13.

We can see that we are faced with the problem of trying to match a constantly varying impedance antenna into a fixed impedance line. It was found that the *average* impedance of a dipole antenna over all the television channels is around 300 ohms, and this is one of the reasons for the choice of a 300 ohm line.

You might wonder why we don't try to use matching devices between the antenna and line to achieve an exact impedance match. Well, one of the major reasons is that such matching devices are in themselves frequency selective, and operate best only at specific frequencies, or within a narrow band of frequencies.

The Q Section. – We have been concerned so far in our discussion, with television receiving antennas, covering all or most of the television channels. If we use a receiving antenna to cover only *one* channel (as in a fringe area), we can, by means of a suitable matching device, secure optimum power transfer from antenna to transmission line. One such device is sometimes known as a "Q" section and its use is illustrated here:

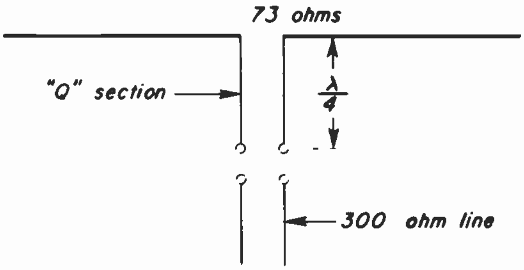

Fig. 21-26

This is a quarter-wave matching section of transmission line with a special value of characteristic impedance. As shown in the figure, assume we have a 73 ohm resonant half-wave dipole, which is to be matched to a 300 ohm line at Channel 11 (about 200 mc). The desired value of characteristic impedance for the quarter-wave matching section may be found from the formula given in Lesson 20, and is 150 ohms. For 150 ohm line of the parallel wire type, the required ¼ wavelength works out to be about 11.5 inches. This takes into account a velocity factor of about 0.77. You must remember, however, that with a matching arrangement such as this, the performance changes at frequencies other than that for which it was designed.

Phasing Harness. – A phasing, or "matching" harness as it is sometimes called, is a device connected between two antennas that permits each antenna to operate independently of the other. Such a phasing harness is to be found connected between the high and low frequency sections of the High-Low Antenna described in Lesson 6. The purpose of this phasing harness is threefold:

1. It facilitates connection to both antennas with a single transmission line.
2. It prevents the high frequency antenna from affecting the low frequency antenna on the low channels.
3. It prevents the low frequency antenna from affecting the high frequency antenna on the high channels.

The phasing harness is made up of three sections of 300 ohm parallel wire transmission line. These are 12, 12½, and 37½ inches in length and are connected as shown in Fig. 21-27 on the next page.

Let us look into the operation of this system and see how it works. We will assume that we are receiving a high-band channel. Let's say its frequency is about 206 mc. At this frequency, section T4 is a quarter wave-length long. Since it is open at the end, it reflects a short circuit into points A and A' of the low frequency folded dipole. This means that any voltage tending to appear at points A and A' due to the high channel station, is effectively shorted out on the low frequency dipole. Section T1 is three times as long as T-4 and is therefore three-quarter wavelengths at the high frequency channel. This means that starting with a short at points A and A', an open circuit appears at the junction B since an odd number (3) of quarter wavelengths produces an impedance reversal. Because of the short circuit at A and A' and the open circuit at junction B, the low frequency antenna does not deliver any appreciable signal to the transmission line for the high-band stations, and the directivity pattern of the high frequency antenna is preserved.

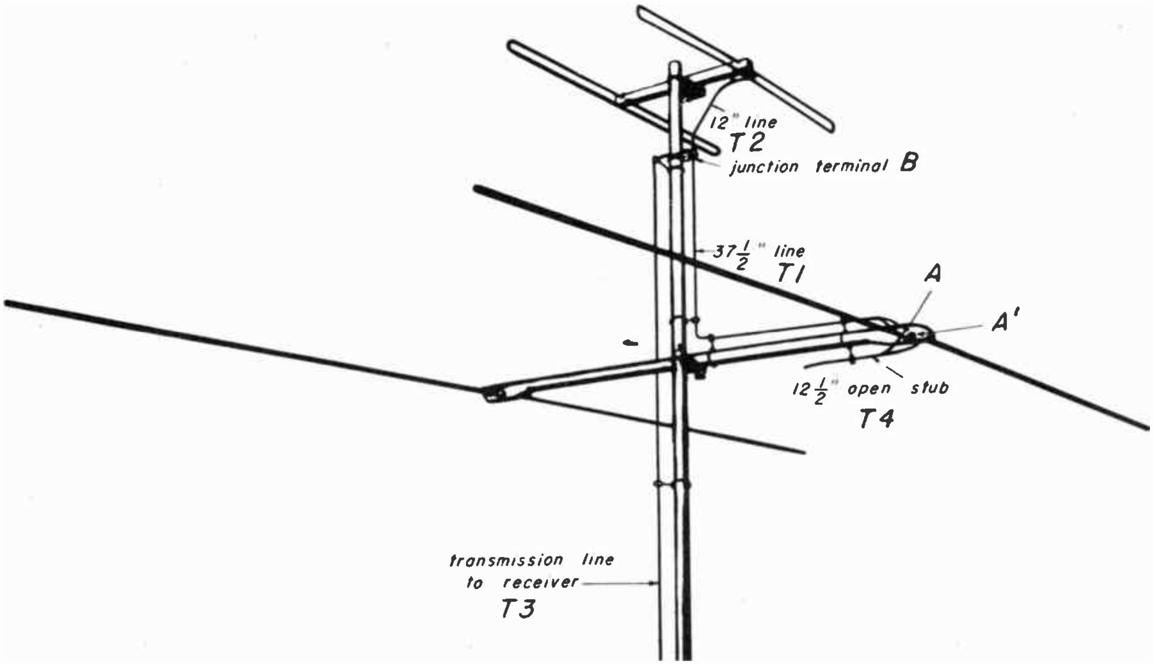

Fig. 21-27

Now let's see what happens at the low channels. At the low channels, the high frequency antenna has very little pickup, since it is only a small portion of a wavelength long at low frequencies. Thus, it has very little effect upon the directivity pattern of the low frequency antenna. Furthermore, at the low frequencies, the high frequency antenna plus section T2 is adjusted so that it becomes an open circuit across T-3 and therefore has little effect upon the signal delivered to T3 by the low frequency antenna.

Because of the isolating effect of the phasing harness, each antenna is able to operate substantially independently of the other. They may be individually oriented for maximum pickup with minimum interaction between them

From a practical standpoint, it must be realized that the phasing harness can operate perfectly only over a narrow band of frequencies. This is due to the fact that a line cut for a certain wavelength is only correct at one frequency. Compared to the advantages of separate orientation, however, the interaction between the two antennas which does occur is relatively unimportant. Some idea of the amount of interaction that occurs may be gained from the following comparison, which is made with respect to separate operation for each antenna.

1. *High Channels.* The performance of the High-Low combination varies from a gain of 16% to a loss of 12%, depending on the channel and also the orientation with respect to the low frequency antenna.

2. *Low Channels.* The High-Low Combination has a loss varying from 5 to 17 percent, depending on the channel. The minimum

loss occurs at Channel 4 and increases toward Channels 2 and 6.

The losses that occur are negligible and can generally be disregarded, except in fringe areas where the reduction in signal may be apparent. In this case it may be necessary to use two separate transmission lines, with a switch at the receiver to select the desired antenna.

In closing, it's worth mentioning also that the High-Low Combination can be used for receiving signals arriving from opposite directions. In this case, the appropriate antenna is oriented on each of the desired stations. Since this requires that the antennas be oriented 180 degrees from each other, it is necessary to "cross-phase" the connection of the matching harness. This merely means that the connections at one or the other antenna, *but not both*, must be reversed.

One other observation ought to be included before we leave the subject of radiation and antennas. The information in this lesson has practical value for you in any television work that involves getting enough signal at the input terminals of the receiver. What you have to do is apply this to your antenna problems.

◆

NOTES

TELEVISION SERVICING COURSE

PREPARED BY

RCA INSTITUTES, INC.

A SERVICE OF RADIO CORPORATION OF AMERICA

HOME STUDY DEPARTMENT
350 West 4th St., New York 14, N. Y.

LESSON 22

SERVICING APPROACH AND TECHNIQUES

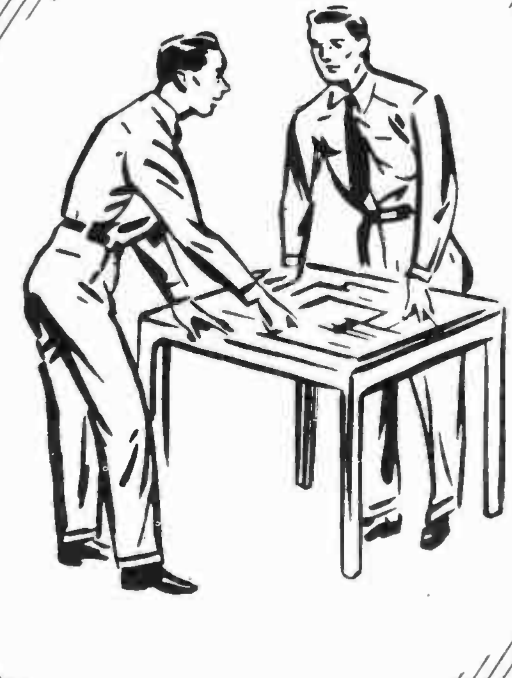

Lesson 22

INTRODUCTION TO SERVICING LESSONS

By the time you've gotten this far in your studies, you will have a pretty good idea of the apparatus that makes up a complete television system, all the way from the camera at the ball park or studio to the receiver in the customer's living room. You also have a reasonable understanding of how each unit forming a link in the television system chain works, and the fundamental laws of Nature that govern its operation. Besides that, you've a pretty good practical knowledge of receiver installation techniques, and quite a bit of experience in applying that knowledge in the field. Lastly, you have taken on some understanding of fundamental electric circuit theory, particularly those parts of it that affect the design and function of various devices in the television system.

This is a fine backlog of knowledge for anyone doing television receiver and adjustment work, since the equipment to be handled can be assumed to be in good operating condition. However, it doesn't completely fit you to find and correct many of the defects that develop in receivers after they are put into service. That will be the purpose of the Lessons you are about to begin to study. It will be helpful in studying, to have a general idea of the material to be covered, its sequence and the emphasis to be placed on certain principles and practices throughout. This Lesson will give you that information, and also an introduction to the servicing problem, general rules to follow and an important new aspect of customer relations not usually found in installation work.

The next Unit contains a detailed resume of Television Fundamentals, with the accent on accurate understanding of the production of a Television Signal and reproduction of the picture at the receiving end. The next Unit also explains the general process of how to localize troubles to a section of the receiver, with definite tests for determining which section is at fault. Then the characteristics of resistors, condensers and coils are reviewed, as an aid in the problem of localizing trouble to a *specific component* of the chassis. Next, the use of the multimeter in checking amplifier, oscillator and rectifier circuits is explained to help in locating a specific failure in any one stage of the TV receiver.

The Lesson on Power Supplies begins a series of Lessons on the individual sections of the receiver. For each of these sections the principles of operation and typical circuits are explained, in order to lay the groundwork for a detailed trouble shooting analysis. The sequence of the Lessons is r-f unit, picture i-f section and detector, video amplifier, sync and AGC circuits and the FM sound channel. Then deflection oscillator, amplifier circuits and the kinescope are discussed in detail.

When all of the receiver sections have been described, a series of Lessons follows on some additional aspects of TV servicing. These include: How to use the oscilloscope, how to align the receiver and methods of reducing interference. A Lesson on record changer servicing is also included.

In each Lesson, the underlying principles for each topic are described first, and then the practical trouble shooting material is explained. Furthermore, one topic leads to the next in order to correspond to the way the signal goes through the receiver to reproduce the sound and picture.

New development in television, including color television and the use of the ultra-high-frequency spectrum for additional TV broadcast channels, are included in this Course. In addition, there will be a detailed analysis of test equipment used in servicing, with practical applications.

THE SERVICING PROBLEM

22-1. The whole problem of servicing the hundreds of thousands of television receivers in use today can be divided into three parts: technical, economic, and customer goodwill. Each of these parts is important, and while you may not have to concern yourself as much with one of them (the economic problem) as with the other two, you'll be better equipped to do your part of the overall servicing job if you understand all three parts thoroughly.

The Technical Problem. – A television receiver is a complicated piece of radio equipment, containing four or five times as many parts as an ordinary table model radio. It also employs much higher voltages in some circuits, and requires the use of a number of electrical principles not needed in conventional AM radio. Also, the bandwidths and frequencies needed for commerical television are much different from those used in AM broadcasting, and adjustment and operation of the various circuits are considerably more precise and demanding. For these reasons television service work requires a better understanding of fundamental radio-electrical theory, and more accurate knowledge of circuit detail and function than is the case in AM or FM radio servicing.

The increased number of components means that there are more things that can go wrong, which means in turn that the service man has to have more possible trouble symptoms filed away in his memory. It also means that just having a list of possible troubles and their cures in the Service Data is definitely *not* going to be sufficient. If it *were* sufficient, there would be no need for any such Course as this one . . . .nor for TV technicians of really advanced skill. It ought to be fairly obvious also that pay and working conditions would not be very attractive, either. One of the main reasons just working from a list of trouble symptoms and their cures is unsatisfactory is that it would cost more to keep the sets operating with such a system. This remains true even if much less highly skilled service personnel are employed at low pay. This is really a detail of the economic part of the servicing problem, but the reason for this fact is essentially technical. The number of possible troubles, symptoms, and cures in television receiver servicing is so large that merely eliminating possible defects one by one down a list, without an understanding of the function and interaction of the circuits involved, would take several times as long on the average as is required by a man who really knows what is going on in the set.

This not only adds up to more actual labor cost, but has a very bad effect in the third part of the servicing problem, customer goodwill. We'll look into this point further a little later. Right now it's worthwhile to take a good look at the economic part of the service problem.

The Economic Problem. – The manufacture, sale, and servicing of television receivers is a competitive business, in which the cost of making sets, the value of public goodwill, and the cost of providing a sound service organization and policy must all be carefully weighed and balanced. For instance, it would be technically possible to manufacture sets that did not get out of order as often as those in present production do. This would require using components of higher rating, more rigid inspections and other checks in production, and other costly measures. The result would be that production cost would go so high that the sets would have to be priced right out of the market. On the other hand, it is possible to produce sets more cheaply by skimping and cutting corners in a few places. However, this results in more service calls per thousand sets in service (which makes service costs bigger), more customer annoyance, and eventual loss of the public goodwill that assures long-term success and prosperity.

Most television receivers are designed to be as good a compromise of these various factors as the state of the radio art permits. This is fine as it goes, but you can readily see that service costs must be held to as low a figure as possible by using good equipment, and highly skilled, competent TV technicians. Otherwise, there will be no profit. And don't forget, no profit, no jobs.

It is true that in any field that is expanding rapdily, such as television, there are always a few chiselers and gyp artists who try to cash in on the demand with some sort of catch-'em-and-skin-'em kind of operation involving a maximum of claims and promises, and a minimum of performance. However, the public soon gets wise to such schemes after the first appeal of novelty wears off, and for that reason you can feel confident that such "competition" where it exists will not complicate the television picture for long.

The Customer Goodwill Problem. – In the long run, the success of any firm in a competitive business dealing direct with the public is greatly dependent on the respect and goodwill of the public. That is why it is so important to earn and keep customer goodwill. Over a period of time, customer satisfaction with the performance of the product and the service organization back of it

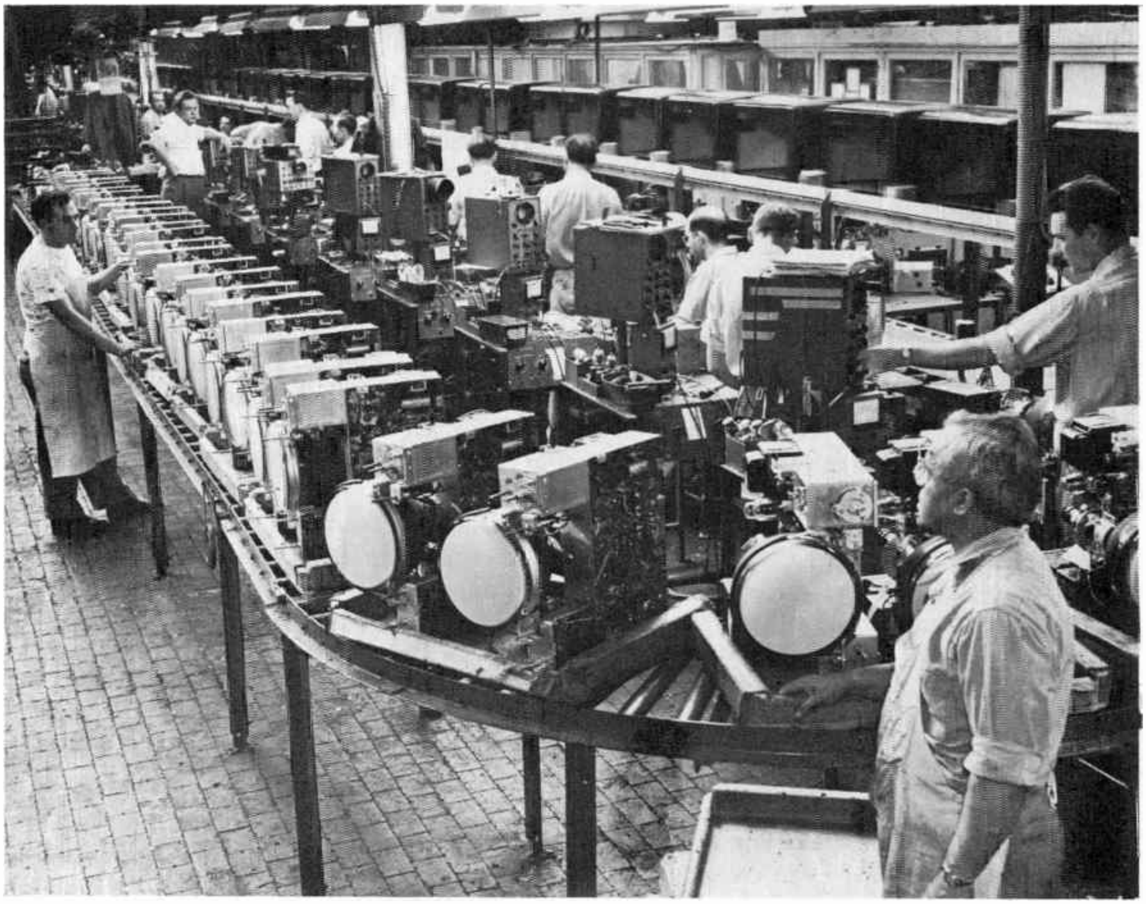

Fig. 22-1

probably has more to do with creating public goodwill than any other single factor, and right here is where you come in. To a large extent, you have more effect on the customer's attitude toward your company than any other person, during that period when he is dissatisfied; that is, *when there is something wrong with his set.* In fact, to him you *are* the company, as you'll learn more fully in the section of this lesson on Customer Relations. It is important that you remember this when you are in contact with the customer.

Another important detail of the customer goodwill problem is that his attitude toward the television set is likely to be much different than it is toward any other radio-electronic unit in his home. For one thing, the set represents a considerably larger investment in money. It is also relatively new and exciting as compared to straight AM or FM radio, and it is a popular subject of discussion all over the nation. Most important of all, it is probably the *only* television set he owns, whereas many homes have three or four conventional radios in various rooms. In addition, because of its size, novelty, and attention compelling aspect, the television set is likely to be the center of attraction in the living room, and a sort of show piece when friends and neighbors drop in. This adds up to mean that the *customer is more annoyed when his television set is out of order than he is about most other appliances or instruments in his home.* He wants it repaired as soon as possible, with as little loss of its use as is feasible. This brings us right around to the technical part of the servicing problem, which we'll take up in its general aspects right here.

The Technical Part of Servicing. – One of the most important things to be learned is how to determine quickly which sets can be repaired in the customer's home, and which ones should be pulled into the shop. You have already learned why the customer usually prefers servicing in his home, because it's obvious that he will lose use of the set for less time if you can do the job right

Fig. 22-2

on the spot. Fortunately, this is better from your company's viewpoint as well, as it involves less labor and equipment wasted in hauling sets back and forth, to say nothing of the increased customer goodwill. It's also better for you, for it involves less lifting and carrying of television chassis, a kind of work that involves more muscle than intelligence.

This decision to pull in or not to pull in is another aspect of your work that requires a real knowledge of theory and practical circuits, instead of an ability to read a list of symptoms and operate a soldering iron. Only such knowledge, coupled with experience and real common sense, will really fit you to handle your job, so it's a good idea to *cultivate deliberately your ability to reason from cause to effect in chasing down the causes of trouble*. If you do *not* sharpen up your skill at this sort of electronic detective work, you'll find that you are pulling in a lot of sets that could have been fixed on the premises. Then the customer is annoyed, because he loses use of his set for a longer period. Pretty soon your supervisor or manager gets annoyed, because of the waste of time and shop space, and this is not good, to say the least. Also, you'll find it pretty difficult to take any pride in your own knowledge and skill.

Fortunately, this ability to collect the clues to the trouble and reason from them to an accurate diagnosis of what is wrong in the receiver can be readily developed by study and practice, and every effort has been made in preparing this Course to help you do just that. It is true that in servicing military equipment, it was sometimes necessary to service just by replacing units, or from a list of troubles and cures. However, this is practical only where expense is no object, and there is not time for more thorough training of TV technicians.

When to Pull the Chassis. – In general, it is only necessary to pull sets into the shop for one of the following reasons.

1. Replacement of parts that are a difficult mechanical job without shop equipment. The most important of these are transformers, tube sockets, bleeder resistors that are riveted to the chassis, and electrolytic filter capacitors that cannot be changed without risk of breaking the insulating wafer socket.

2. Trouble in the r-f unit, such as defective soldered joints on the switch contact lugs, poor indexing on the various channels, low gain, excessive noise, etc. Naturally you must be very sure that such troubles as the latter are due to defects in the r-f unit itself, and you should check the tubes in that unit by substitution, also.

3. Replacement of any part that you do not have with you in the truck, unless you are very sure that you know exactly what the trouble is, and what parts are needed to correct it. If you *are* positively sure of your diagnosis, you can leave the set and return later with the needed part, or possibly obtain it in some other way.

4. Good customer relations. This may seem like an odd reason to you, particularly if you are perfectly sure you can service the set properly in the customer's home. But mistakes may have been made on previous service calls, so that the customer won't be satisfied unless the set goes to the shop.

5. Receiver Alignment. If the r-f or i-f circuits of the receiver need to be realigned this is best done in the shop, where the necessary test equipment is available.

Practically all other troubles can be satisfactorily handled in the customer's home. This means that the vast majority of calls you make can be repaired right on the spot, *if* you're good enough at determining whether or not the trouble comes under one of the four headings above. But to find that out, you have to look at the evidence.

Collecting the Clues. – The first step in correcting trouble in almost anything is to find out exactly what is wrong with it. When you pick up your job sheets before beginning a round of service calls, you are also ready to start collecting clues as to what has gone wrong in each set assigned to you. The first step is to note the customers complaint, such as "no sound", "no picture", "picture won't lock in", etc. Next, check the past performance of the set, as shown on your record card for each set covered by a service contract. This is a relatively easy procedure, and the reasons for it are important enough to justify some detailed discussion.

History of the Installation and Set. – Knowledge of the past performance of the equipment and installation is a definite help in servicing anything that requires expert attention. This is just as true of television sets as it is for locomotives. . . .or an attractive widow. When you check over your record card, you should note particularly the following points.

1. All important details of reception when the set was installed, as shown by the installation crew's report. Be sure to note particularly any ghosts, interference, or noise reported on any channel.

2. What previous service work has been done on the set. If there have been two or more calls within a short period of time for the same complaint, you should be suspicious of some unusual condition or trouble that may require special handling.

Make notes about any jobs where you think you'll need them, but in any case, study the case history enough to know whether it *does* have some unusual feature. There are good reasons for doing this, even though it takes a little extra time and effort. If there has been a recurrence of the same trouble two or three times within a suspiciously short period, it's pretty likely that the real trouble was not cured in the beginning. Partial failure of a coupling capacitor, for instance, may cause an associated resistor in the same circuit to carry an overload of current, which may cause the resistor to fail. If the technician who serviced the set before you merely replaced the resistor, it's easy to see that the new one would also fail in a few day's service, unless the capacitor is also changed. We'll go into such problems in detail in the appropriate places in this Lesson and throughout the Course.

The Customer's Viewpoint. – Besides the servicing problem such a case presents, it also is likely to be a customer relations problem. If there have been two or three service calls for the same effect within an unreasonably short time, naturally the customer is going to be annoyed. He's also likely to have developed some doubts as to the efficiency of the service he's getting under his service contract, (if there is one) and it's up to you to reverse this doubt and turn it into renewed confidence by a quick, complete cure of the trouble. Often such repeat service calls are the cause of a customer's coming to distrust *all* servicing in the home. It is this sort of distrust that often causes a customer to demand that the set be taken into the shop for servicing.

Interference Complaints. – On the other hand, your close study of the reception conditions noted by the installation crew is warranted for another reason. If the call is about some such thing as a ghost or interference, there is a good chance that the customer is complaining about a condition which cannot be eliminated by any reasonable effort on your part. Customers can become awfully sensitive to picture defects after the novelty of having television in the house wears off, and they sometimes complain later about defects in reception that were actually pointed out to them by the installation crew when the set was installed. This does *not* mean that the customer is a cantankerous jerk who wants something for nothing. It is normal to want things to be perfect, and you no doubt have had the same experience of noticing small imperfections in something you have acquired, after the novelty has worn off. Married men will understand this observation particularly well.

Along with this bit of psychology there is the fact that the public does not have the understanding of television that you possess. Friends and neighbors stop in, comment on the ghost or interference, and then drop some of those solemn pronouncements like "Oh, they can always fix such things if you keep after them," and that does it. The customer doesn't know otherwise; he's paid for a service contract, so he gets on the phone and yells for help. In such cases, it is your job to make the true situation clear to him without losing his goodwill. This is just as much a part of your job as fixing a broken transmission line or cleaning the safety glass, and quite often it's the hardest part.

On the other hand, new complaints about ghosts or interference *may* be quite legitimate. Here you can make use of your knowledge, and the experience you have from installing sets, in doing what you can to eliminate the trouble. Often a new building erected in a neighborhood will put reflections in a lot of sets that didn't have them before, or will reduce the signal strength in receivers located "behind" the new building, as seen from the transmitting antenna. Such cases may require careful reorientation, a taller mast, different antenna, or some other change, and it will often be best to call your Supervisor if this looks probable.

Of course, new noise and interference sources can also show up, and here again the complaint must be dealt with just as effectively as you can. Lesson 13 contains information on this subject. More details will be included later in the Course.

Getting The Customer's Information. – Your next step in collecting clues to the trouble comes when you reach the customer's home. After you've introduced and identified yourself, request the customer to describe just what is wrong, in his own words. You should decide while he is doing this whether or not he is particularly excited or angry, because this has some bearing on how you should go about obtaining the information he can give you about the set. If he *is* irritated and generally upset, you must be particularly careful to listen attentively, but calmly and respectfully, even though he seems unreasonable. Don't lose your temper, and above all, don't argue back. In fact, don't do much talking at all until he has let off some of the emotional pressure, as even the appearance of opposition is likely to have the wrong effect. This point is covered more thoroughly in the Section on Customer Relations.

Assuming for the moment that the customer is not particularly upset, consider what he says about the set carefully. If, for instance, the set was switched on the day before and immediately caused a house fuse to blow, it's obvious you'll have to check the cord and plug, ON-OFF switch, power transformer, and associated circuits with an ohmmeter before the set can be turned on again. This is one reason why you should hear at least a part of the customer's story before doing anything to the set.

If the set is in such condition that it can be turned on, the next more is to have the customer switch it on and demonstrate the defect, if this is possible. From his description and demonstration you'll be able to learn whether there is a real defect, or whether some fault in his operating technique is responsible for the difficulty. If there *is* something wrong with his operation of the set, you must teach him the right way to handle it, tactfully and carefully, so as not to suggest any smart-Alec attitude toward him. This is discussed more fully in the Section on Customer Education.

On the other hand, if there is some obvious thing wrong with the set, such as no picture, no sound, no horizontal deflection, etc., it is clear that this defect should be tracked down and fixed before you do anything about the customer's operating technique. Even if there are no stations on the air when you call, you can examine the raster and spot any peculiarities. At the same time you should ask the customer questions designed to bring out any information he may have forgotten, or which he may have considered irrelevant or unimportant.

Some of the things you need to know are the answers to the questions that follow.

1. Did the trouble begin suddenly, or is it a condition that just gradually got worse over a period of time, perhaps weeks or months?
2. Is it steady, or intermittent?
3. Does it show in the raster, or only when a station is tuned in?

4. Does it show on one channel only, on several, or on all active channels?
5. Does it begin the moment the raster appears after the set is switched on, or only after some hours or minutes of normal operation?
6. Has anything been changed in the installation since the last service call? That is, has the set been moved from another room, badly jarred or shaken, or has there been any outside work that might affect the antenna or transmission line. What about new buildings or other possible obstructions to the signals?

You can ascertain most of these things while you're talking the matter over with the customer and observing operation of the set. The questions listed above will indicate the sort of question to ask of the customer while you are watching the set itself. Of course in a lot of cases the trouble will immediately show up when the set is turned on. Usually you'll get a good idea of what is wrong right then. But even so, it's a good idea to get the whole story from the customer just the same. It has a good effect on his attitude toward you, and it often brings out facts that put the trouble in an entirely different light. For instance, suppose when he turned on the set the night before, a house fuse blew out. It *may* mean the set has developed a defect, or it may mean that his wife had an electric iron, heater, or hot plate plugged into the same line. This is the kind of thing you may find out under question 6 above. The remedy in the example mentioned is obvious, of course.

Kinescope Clues. – While you're still getting information from the customer, you can also be observing actual operation of the set, if it is in condition to permit switching it on. If no station is on the air at the time of your call, check the appearance of the raster. Obvious clues like no deflection, intermittent flashing, no light from screen at all, etc., will be easily spotted. Things like no deflection indicate something definitely wrong with the set itself, but if there is a normal picture that shows abrupt and more or less erratic sudden jumps in brilliance, there's a good chance that the trouble is in the antenna or transmission line. This and other useful tests for narrowing down the trouble spot are considered in general terms a little later in this Lesson. They are treated in detail in Lesson 6 for the entire receiving installation, and in the later lessons dealing with individual sections of the receiver, similar checks for cornering the faulty component are described.

An important point about kinescope clues is the matter of ghosts, noise, or interference. If one or more of these are responsible for the service call, be sure you check what you see and what the customer has described against what you learned about the reception when the set was installed. Don't assume the customer is mistaken or lying if the trouble doesn't show up while you're looking for it. This is an aggravating habit of actual sources of noise and interference, although ghosts are usually all too dependable. If there is a report of a ghost which does *not* show up when the set is first turned on (assuming the channel concerned in the report is on the air), there is a chance that the ghost was due to a transient condition at the transmitter, which has been corrected while the station was off the air. There is also a chance that there is a defect in the receiver i-f amplifier which only takes effect after the receiver has warmed up thoroughly. This latter possibility will be covered later.

You can probably check on the possibility of a transmitter transient condition the previous day by phoning the shop. On the other hand, if the set does not show any signs of the reported ghost, noise, or interference, you may have to reschedule the actual service operation for the time of day at which the customer noted the trouble. Be sure you explain this to the customer, and also that you take whatever steps are necessary to make the call at that time, or insure that someone else will be sent on it.

Making Sure The Receiver Is At Fault. – Your next step in collecting clues after talking to the customer and checking the set operation is to find out just where in the system the trouble is. In many cases you will have determined this already, but if you can't be sure from the evidence already collected, begin making some tests.

Check Antenna and Line First. – With any report of intermittent trouble, compare the appearance of the raster with the set tuned to an inactive channel with operation on an active channel. If the raster is steady, but the picture jumps or flashes, trouble in the antenna and transmission line is likely. Disconnect the line, inspect it carefully as far as you can see for breaks, kinks, or abrasion. Also, check the condition of the input connections. If nothing shows up, try shaking and wiggling the line vigorously while watching the kine. If this produces the trouble, you're obviously on the right track. On the other hand, if it doesn't, you still have not got the thing nailed down. The break or loose connection could be further up the line, or at the antenna. However, before you head for the roof, try disconnecting the line and connecting an indoor antenna with a short piece of parallel wire line. If you get a steady picture on this antenna, even though it is weak, you can feel pretty sure there is trouble in the line or antenna.

On the other hand, if the trouble still appears, try jarring or bumping the set, to see what effect this has. You must be careful in doing this not to be so vigorous as to alarm the customer. Remember that you are handling his *only* television set, and that he doesn't have the day-to-day familiarity with receivers that you have. Besides, if you are too careless about bouncing the set around, you may give him the idea that it will stand just about anything, and this attitude on his part is likely to result in further service calls.

If a jar or bump produces the intermittent trouble, check each tube carefully for good, firm seating in its socket. You'll probably notice while doing this whether any of them seem unduly hot, as well. The reason for not trying the tube seating before localizing the erratic trouble in the receiver is simple. If you *do* check the seating, you may cure the trouble without knowing you have done so, and then spend a lot of time trying to produce a trouble symptom that has been fixed. It is important to know what is causing trouble, and that you have actually found and repaired it. If you don't make sure of this, there is a good chance that there will be another service call on the set next week. Needless to say, this won't make anyone particularly happy, least of all you when the matter comes to the attention of your employer.

How Is The Signal? – If you've definitely ascertained that the trouble is in the antenna or line, the obvious course is to repair the damage. You're already equipped to do this by your past study and experience. If, however, you've located the trouble in the receiver, your work of narrowing down has only begun. Before going into further detail, however, we may as well finish dealing with trouble sources outside the receiver. If the complaint is noise, ghosts, interference or weak signals, you can suspect that the trouble is external right from the start, although the tests mentioned earlier should not be neglected. Weak signals or a new ghost may be due to building construction in the neighborhood, which you may be able to see from the antenna location, or learn about from the customer. On the other hand, they may be caused by a change in antenna height and orientation. Sometimes children playing on apartment roofs will loosen mounting fastenings, or other television antennas may be mounted improperly close after your installation was made.

The remedy here is to check on the possible new construction which may be making a ghost or shadowing the antenna, and to reposition and reorient the antenna for best pictures. Here again you must compare what you get with the reception reported by the installation crew.

If for any reason you suspect difficulties at the transmitting station, inspect operation of the receiver on other channels carefully, and check the suspected channel with someone in your shop by phone, if possible. The whole problem of narrowing down the trouble to the receiver itself is covered in a later Lesson in detail, but it is time to get on here with the general problem of pinning the trouble down to a definite section of the receiver, once you know it *is* in the set.

LOCALIZING THE DEFECT

22-2. Up to now you've still been more or less collecting information, although it has already been necessary to use a few simple tests in your search for clues. When you have the trouble definitely located as being in the set, there are certain other symptoms that usually give a definite hint as to which section of the receiver is at fault. Discussion of these symptoms will be clarified by the block diagram in Fig. 22-3 on the next page, which shows the main sections of the receiver in their proper functional relationship.

Front End Troubles. – The part of the receiver most likely to develop trouble is the r-f section. It is often called the front end, since it is the part of the set through which the signal passes first. Here we are handling the signals from all the active television channels, so of course it is necessary to have tuned circuits to select the desired station, and reject the others. Also, it is necessary to switch from one channel to another, so the customer will have a choice of programs. It is this combination need for selective tuned circuits and a means of choosing the desired one at the turn of a knob that makes this part of the set somewhat more vulnerable to

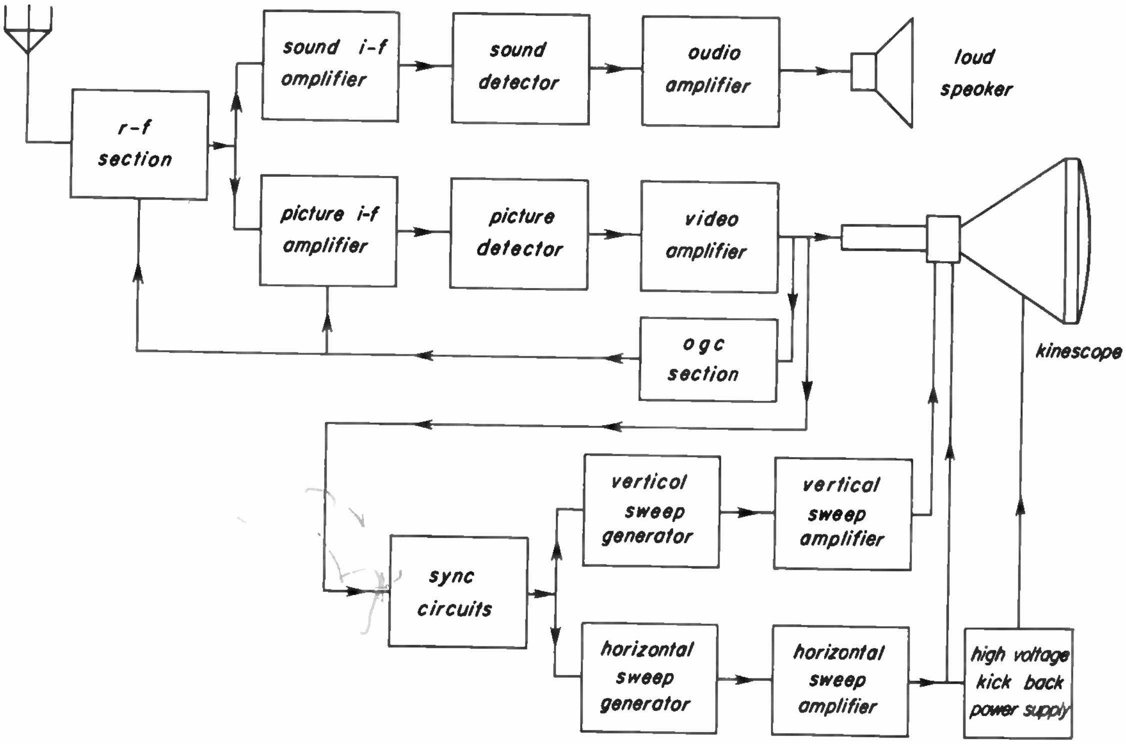

Fig. 22-3

trouble. At the high frequencies involved, a small change in mechanical relationship of the circuit components may change the tuning enough to hinder or completely prevent reception of a channel, or several channels.

Trouble in this section is almost sure to affect *both* picture and sound, and this is an important clue. With no picture and sound, or with defects such as noise or jumpiness in both, try the effect of a little pressure or rocking movement on the channel selector knob. If this increases the noise and picture faults, chances are you are on the right track. Try also switching off the affected channel, and back, rapidly. Then try the other active channels for similar effects. Trouble in the r-f units may show up on one channel only, but it can also affect several or all channels. A defect in the oscillator circuit, for instance, can easily cause no picture and no sound on all channels.

The Horizontal Oscillator. – The circuit next most likely to develop trouble seems to be the horizontal oscillator, and associated components. If the set seems to have normal sound, but the picture won't lock in, or stay locked in horizontally after you get it, horizontal oscillator trouble is a good possibility.

Of course, trouble can develop in any of the other circuit blocks that make up the receiver, but on the basis of past experience, the two units just mentioned seem to fail most often in sets of current and past production. Here are some more general clues to use in localizing the trouble. If sound is okay but there is no raster, the high voltage supply may be defective.

Checking High Voltage. – It's quite possible that you'll have no instrument available that will measure the high voltage. Even so, you can make a rough check by *VERY CAREFULLY* drawing an arc from the high voltage lead, after disconnecting it from the kine. The length and color of the arc will be a fair indication of the condition of the high voltage supply. In most sets, an arc of bright blue or bluish violet, from 1/2 to 5/8 inch long is pretty fair evidence of normal operation. Incidentally, you must draw the arc in a certain way, and follow the same procedure each time, or you may not get the proper result. Worse than that, you may damage the set, or your own precious hide by carelessness. *DO NOT DRAW THE ARC BY BRINGING THE HIGH VOLTAGE LEAD CLOSE TO SOME PART OF THE SET THAT IS AT GROUND POTENTIAL.* If you do, a relatively large current will flow through the series 1 meg resistor in the high voltage circuit, and the value of the resistor is likely to increase to 10 or 15 meghoms as a result. This will lower the effective high voltage at the kine, and cause the picture to "bloom" (expand in all directions) and probably lose brightness.

Instead of arcing to ground, hold a screwdriver with a *well insulated* handle so that the tip is brought near the tip of the high voltage lead. Be sure you hold the tool by the insulated handle, of course. It may seem odd to draw an arc from a power supply in this way, with (apparently) no return circuit. Actually, capacity effects between your hand and the metal of the tool, and between your body and the chassis account for the result.

If the high voltage seems normal during this test, it may indicate a defective kinescope, or a ground from the metal cone to the chassis in tubes having that construction. A defective kine is more common than grounding trouble.

Interpreting General Symptoms. – If there is normal sound, but no raster or picture, the r-f, sound i-f, sound detector, and audio amplifier and speaker must all be operating properly, which puts the trouble in some part of the picture circuit further from the input than the point where the sound is taken off.

Obviously, if there is a normal raster or picture, but no sound, the trouble must be in some part of the sound channel that is not common to the picture channel as well. This means beyond the point in the picture i-f channel where the sound channel is separated.

Checking Tubes. – There are several other general symptoms of this sort that help to narrow down the search, but these will be enough to illustrate the method, and a later lesson will take up this process in much greater detail. It's time now to consider some facts about the component parts of a television set, since they influence the narrowing down process greatly. One of the first parts to suspect is the vacuum tubes in the section of the receiver that seems to be at fault. As soon as you have traced the trouble to the receiver itself, you should check all the tubes for proper seating, and to see that they are actually at operating temperature, but not overly hot. Only some experience handling and feeling tubes in normally operating sets will make it possible for you to do this effectively. If everything seems in order, try replacing the tubes in the suspected section *one at a time*, with tubes taken from your supplies. It is best to use for test replacements, only tubes you know definitely are good, but it is fairly safe to assume that new tubes will be good, if you do not happen to have one on hand that you have actually tested in an operating receiver.

Don't pull tubes and substitute others wholesale, for you'll only make it harder to find the actual faulty tube or other component that way. Instead, replace one at a time, give the replacement tube time to warm up, and check the trouble symptom again. If there's little or no improvement, put the original tube back in the socket, and go on to the next. It is particularly important when testing the oscillator tube in the r-f section by substitution that the original tube be replaced if it is not defective. If this is not done, the differences between the individual tubes may make it necessary to realign the oscillator tuning, and this is unnecessary if your test shows the trouble is not in the oscillator circuit. Even the horizontal or vertical oscillator circuits may require some readjustment when tubes are changed, although they are not so critical as the r-f oscillator circuit.

One of the reasons for starting your check of components with the vacuum tubes in the set is that, in spite of continuous efforts at improvement, vacuum tubes are still more prone to failure in service than many other types of components. Another reason is that the tubes are accessible without removing the chassis from the cabinet, and thus can be tested with little waste of time or labor.

Other Component Failures. – However, other parts can fail as well, and its worth our while here to consider the others most commonly found defective, to see how they affect the localizing problem. Service records seem to indicate that by-pass capacitors in the various circuits are next most likely sources of trouble. These usually fail by short circuiting, or by developing high leakage, which is really a sort of partial short circuit. They may also occasionally develop an open circuit, but this condition is considerably less common. A short circuited capacitor or one having high leakage is likely to cause a resistor or tube in the associated circuit to draw a heavy current overload, and possibly fail because of it. Such overloads heat the affected part far above the proper operating temperature,

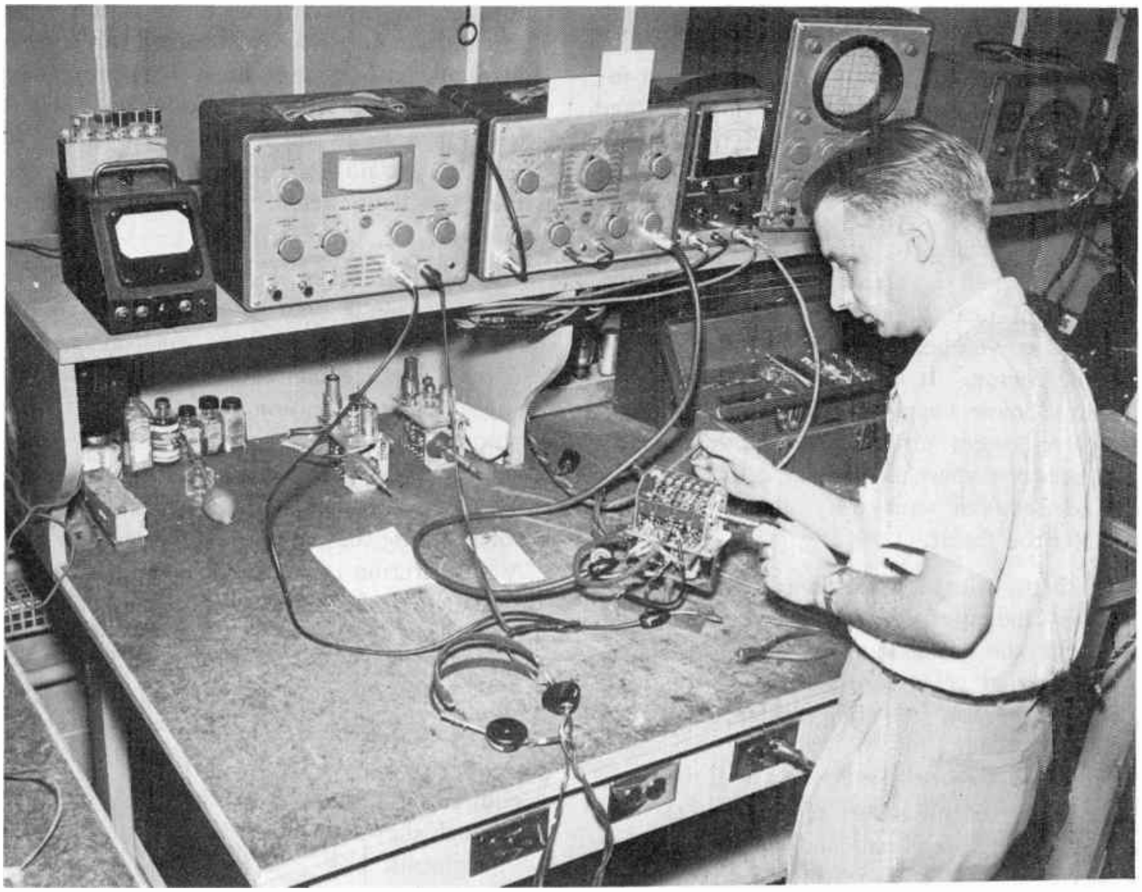

Fig. 22-4

and usually cause a distinctive odor which you'll soon be able to recognize long before you get the chassis out of the cabinet.

Use Common Sense Reasoning. – Before we turn to these and other specific aids in locating trouble, however, let's consider some general principles of servicing that should now begin to show up. Probably you are already aware of them, but it is best to state them definitely at least once, to help fix them clearly. It's obvious that, since the signal goes through the receiver in a definite sequence of circuits, anything going wrong at one point in the sequence will do something to the signal to show that there *is* trouble somewhere, or perhaps prevent the signal producing any output at the kinescope or loudspeaker at all. As soon as you know that the set is getting power, and that all the tubes are at operating temperature, you know there must be a raster or a reason for not having one. If in addition you know that television signals are reaching the input terminals (either sound or picture output coming through), you then have a starting point for your detective work. It then becomes a matter of using your knowledge and experience in testing step by step until you reach the point where the signal goes bad or disappears.

Naturally the more experienced you become, the more accurately and quickly you will be able to analyze the information you get from the appearance of the kinescope, or the sound output or lack of it. But the biggest factor in unravelling the the puzzle will always be your ability to observe the effect produced by the fault, and reason back to the defect in the circuit that can cause such a symptom. By all means try to build up this detective ability by becoming familiar with circuit diagrams and the operating sequence of the various circuits, and by analyzing case histories you encounter in your daily work. Practice of this kind will soon make it possible for you to handle the usual difficulties in stride, with hardly a pause for headscratching. And when you hit the tougher, more obscure problems, you'll have the basic method for solving them already established in your mind.

AIDS IN LOCALIZING TROUBLE

22-3. After you've established that the trouble is in the set, and is not due to defective tubes or some other fault that can be checked with the chassis in the cabinet, you'll have to haul it out where you can get at the bottom for the next stage of the work. In getting the chassis out, be careful not to damage the cabinet, or any of the customer's other furniture, and handle the set gently, particularly if the customer is present. Naturally you work on your drop cloth in order not to litter or soil the floor or rugs.

Preliminary Inspection of Chassis. – Now you can smell under the chassis for overheated parts, and also inspect it visually for misshapen or discolored resistors or capacitors, broken or improperly dressed leads, burned insulation, loose connections, or poorly soldered joints. These latter are a major source of trouble, particularly in the r-f section. They can sometimes be found by inspection, as they usually have a greyish, lusterless look, but often it is necessary to try poking and prodding them with the set operating in order to really find them.

In addition to looking and sniffing, you can feel some of the parts to make sure they are operating at normal temperatures. Be wary of getting your hand on any voltage that can shock you, however, as aside from the unpleasantness and danger of injury, there is also the risk of damaging the set. In fact, at this stage of the game you should be ready to make use of the schematic diagram and other detailed circuit information provided in the Service Data for the set.

Use of Service Data. – Oddly enough, quite a few customers consider your use of the Service Data as evidence of ignorance on your part, as though every service technician had an infallible memory for every single feature of every one of the dozens of different models of television sets now in service. This isn't a very reasonable attitude, but you must keep in mind that the customer doesn't have a very good idea of the complexity of the set or the number of different models you must deal with.

You can help this situation when you have to pull a chassis and explore its "innards" with the aid of the schematic diagram, by letting him see just what a rat's nest of small parts and wiring exists beneath the chassis. You can mention casually that television sets have five or six times as many parts as an ordinary radio, and several kinds of circuits that are quite complex. You can also give him some idea of the number of different models of receivers in service by mentioning that there are dozens of different models of just one make receiver. This will make it fairly obvious to most people that a television set is more difficult to service than a little table model AM radio. It will also give the customer some understanding of why you refer to the schematic, and you can add to that by mentioning that your company insists that you use a schematic, rather than relying on guesswork and memory in servicing his set. Naturally you should not make a big show of getting this information across. Let it come out as it might in a normal conversation. At the same time you will be satisfying the customer's curiosity, and the chances are he will have an increased respect for the problems of television service when you've finished.

A better informed customer is very likely to be a more understanding and reasonable one, too. Incidentally, while it's a good idea to give the customer a reasonable idea of the complexity of a television receiver, don't go to the opposite extreme. Don't make it out to be a super-complex, ultra-tricky sort of contraption that is likely to go haywire at the slightest disturbance. Considering the added complexity as compared to ordinary radio receivers, a television set is surprisingly free from serious troubles in service. You'll find some other useful ways to clarify matters for the customer in the Section of this Lesson devoted to Customer Education. However, it is time we got on with discussion of the equipment you use on the job.

What a Voltmeter Will Tell You. – Along with the Service Data and all the diagrams, pictures, and other information it contains, you usually will have a volt-ohm-milliammeter such as the Simpson 260, and hand tools such as screwdrivers, pliers, sidecutters, small wrenches, etc. The meter enables you to measure practically any voltage anywhere in the set, excluding the high voltage to the kine, as mentioned before. You can also read the current through any circuit but since this requires disconnecting a lead and putting the meter in series with the circuit, it is much more common to measure the voltage drop across some component in the circuit whose resistance is known. Then the current can be found by Ohm's law, although usually a comparison of the voltage found between a given point and ground will show whether or not the current through that circuit is normal.

Fig. 22-5

Naturally in making measurements with the meter, you'll have to be able to identify the actual appearance of components with their symbols on the schematic diagram, but this is merely a matter of some intelligent observation and practice. You can learn a great deal by reading voltages at different points in the suspected circuit and comparing them with the correct voltages shown on the schematic. Any large departure from the specified values indicates trouble, and means a careful check of each individual component in in that circuit. If, for instance, you find that the grid voltage of any stage differs from the value specified on the circuit diagram by more than about fifteen percent, it's a pretty sure indication that something is wrong. First, check the line

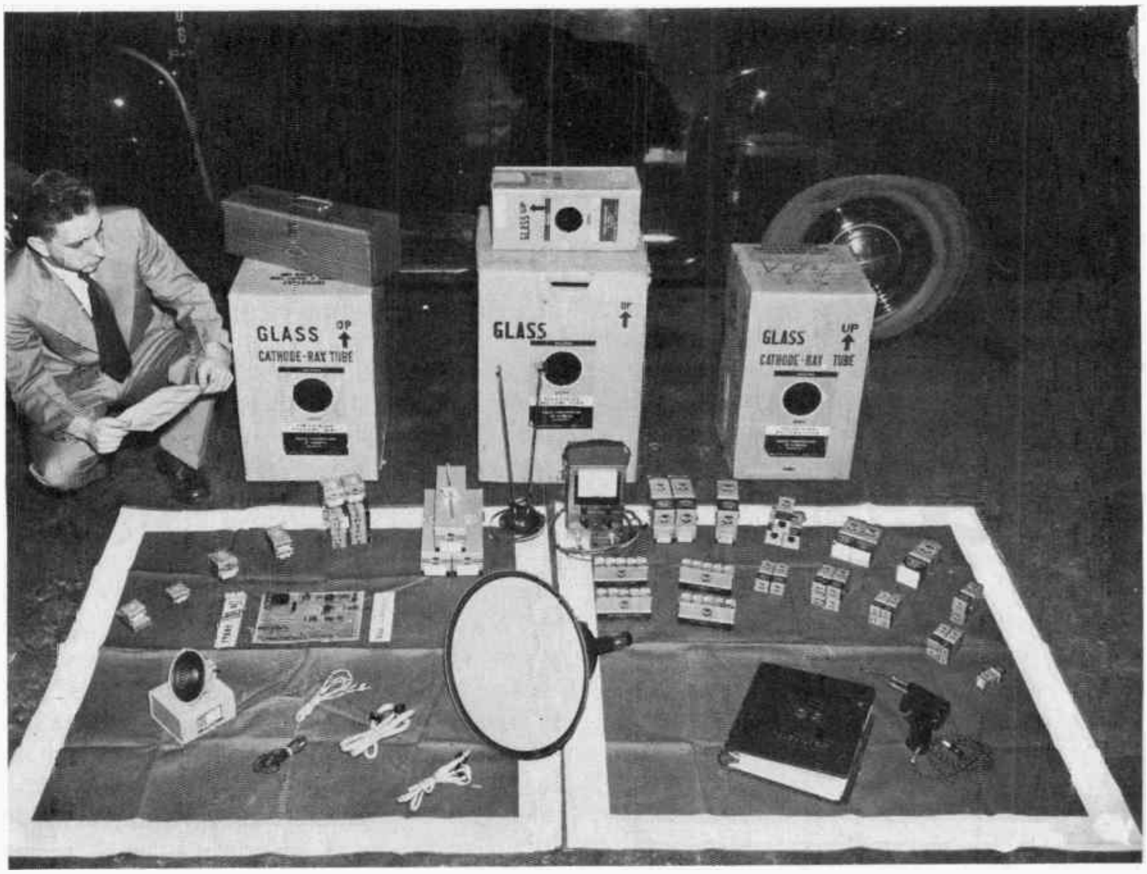

Fig. 22-6

voltage, unless you're already sure it is normal, or nearly so. Your next move is to study the circuit diagram, if you are not already familiar with that part of it, and decide what is the most likely cause of the trouble. Your experience with similar circuit defects naturally has a lot of bearing on this question. In the case we are considering, the trouble could be a defective tube, improper supply voltages, B plus voltage leaking through the coupling capacitor, a defective grid resistor, incorrect signal voltage to the stage (in cases where the bias is produced by the signal voltage), or a leaky cathode bypass capacitor. This example is only offered to illustrate the method of tackling such problems. In general, it is wise to test for the most likely defect first, as was done in this case. That is why a general knowledge of which types of components fail most often in service is helpful.

It should be clear from this that you need to understand the way in which each circuit in the receiver operates, and also be able to recognize at a glance any component part, and its corresponding symbol in the schematic. A later Lesson in this course, on the chassis and its components, will help; but there is no complete substitute for direct study of the chassis itself. In this way you learn the actual appearance, feel and smell of normally operating components and circuits, and you can poke into them with a voltmeter and see just how a normally operating set should read. Bear in mind, however, that readings must be made in the same way as they are described in the Service Data. Otherwise, you may get different readings. If for instance the Service Data specifies that voltages are to be read with no signal tuned in, you must not expect to get the same readings in all circuits when there *is* a signal tuned in. Also, some circuits are of such high internal impedance that they will show different readings on the Simpson meter than on the Electronic Voltmeter. Fortunately this is not true of most of the measurement points, and a little deduction will usually show you where this phenomenon is likely to cause confusion.

Experience vs. Theory. – The question of experience versus theory is often discussed in servicing organizations. It should be apparent by now that neither one is of maximum use without the other. Furthermore, there must be a balance between the usage you make of these two things, or you will not attain maximum efficiency. The fellow who snears at "booklearning" is likely to be someone who secretly fears he doesn't have enough of it, and the theory shark who can't replace a grid resistor without running off several differential equations via slide rule and log table is no more use in the shop than a bladeless screwdriver without a handle. On the other hand, accurate understanding of the electrical principles on which all components and circuits function will make it possible for you to figure out what is happening even in circuits that are new to you. Coupled with the practical skill and speed in recognizing familiar troubles that experience brings, such theoretical knowledge makes the best possible combination. It is probably true that theoretical knowledge is of more direct use when tackling a new or especially obscure problem, and practical experience is best suited to handling run-of-the-mine difficulties. However, nobody can count on encountering only the "usual" troubles he is familiar with, any more than he can count on throwing all sevens.

Probably the worst fault of the "practical" man who swears he knows nothing about theory and doesn't need to, is this: He fails to realize that a knowledge of theory is really not very hard to acquire, and that it will be an asset in his daily work, to say nothing of his chances for advancement. In time, this mistake can have serious consequences, for *other men whose attitude toward theory is more logical will sooner or later catch up to and pass him in ability on the job.* The complexity and variety of electronic devices in use by industry and the public is steadily increasing. Naturally the demand for men whose theoretical knowledge is great enough to permit them to adapt quickly to new circuits and techniques is also increasing.

As to the theoretical man whose practical experience is shaky, he too has problems. It is not enough to just *know* in this world, unless you don't have to worry about inconsequential things like eating. You must also *do,* and in servicing work, that means produce finished jobs at a reasonable rate. Perhaps the greatest weakness of the theoretical man is a lamentable tendency to make every job, however simple, into an exhaustive demonstration of his knowledge of Thevenin's Theorem, or the Laplace transform. This sort of thing may be great for astounding your friends and keeping the Little Woman in proper awe of the Genius she married. But it doesn't get Milton Berle and Hopalong Cassidy on the kinescope as fast as a quick, practical job of yanking the bum tube and replacing the leaky coupling capacitor. Don't let yourself fall into either of these extreme attitudes.

CUSTOMER RELATIONS IN SERVICING

22-4. Back in the beginning of the Course you learned about the importance of your relationship with the customer during installation work. In service work, customer relations are, if anything, even more important, because of a psychological point you must keep firmly in mind. *In every case where service is requested by the customer, he is dissatisfied with the performance of his television set.* The reason for his dissatisfaction may be anything from no picture to an imaginary new reflection, or an unfavorable comment by a neighbor. The point is that he *is* dissatisfied, and your job as a service technician is to *make him a satisfied customer again.* In most cases, of course, this means repairing or readjusting the receiver, or some other part of the installation. But in quite a percentage of cases, it means informing and educating the customer about some aspect of his receiving installation, or of television in general. In any case, you are dealing with a person who is dissatisfied, and you should be prepared to use whatever tact and diplomacy is required, as well as your technical knowledge and skill.

The amount of these qualities you need on any given call will vary, depending on how reasonable and intelligent the customer is, and how serious his dissatisfaction is. But these qualities, and some knowledge of basic human psychology, are just as much a part of your working equipment as your screwdriver, or your knowledge of Ohm's law. That is why this Section of this Lesson is included – to provide you with the needed knowledge of psychology and the understanding of the importance of applying it, not only in dealing with the customer, but in governing yourself, as well. That is a large part of the matter of being tactful and diplomatic. Remember that it is much easier to *keep* customer goodwill than it is to recover it, once it has been lost.

Overall Importance of Customer Goodwill. – The extreme importance of customer goodwill may not be readily apparent to you at first thought. You may know that the quality of your receivers is high, and that they offer as good or better value for the money than any competitive make. You may know that the service organization and policy standing back of your line is unequalled in the field for competence and reliability. But here is where the catch comes. The customer cannot know these things with the conviction you do until you convince him, because he does not enjoy your inside knowledge of the television field. Also, he is assailed constantly by all sorts of conflicting claims, which he lacks the technical knowledge to evaluate accurately.

In the long run, any competitive business dependent on the patronage of the public must have a large measure of public goodwill in order to succeed. Fly-by-night, catch-'em-and-skin-'em promoters can occasionally open a business venture in an expanding field and fleece some trusting people with a gyp operation, but they can't stay in business very long in competition with legitimately run businesses. One of the reasons for this is that reputable businesses, knowing that *continuing* success requires public confidence and goodwill, offer honest values in the products they sell, and back them up with honest, fair service policies and organizations, and that's where *you* come in. All the smart advertising and glittering showrooms and salespeople that money can buy will not long sustain a business that offers a consistently inferior product, or a dishonest, cheating policy and organization to back it up.

Over the years, the value and importance of an honest, efficient, and reliable service organization in back of a line of products begins to make the difference between failure or just getting by, and stable, dependable success. It ought to be pretty obvious that the latter kind of business is the only sort that insures continued employment at good pay, and opportunities for advancement. From this latter it follows that you have a direct, personal interest in building the public goodwill and confidence that makes all this possible, to say nothing of your natural desire to maintain your self respect and the respect of your employer and fellow workers as an efficient, honest, intelligent worker.

Your Part in Building Customer Goodwill. – It is easy for you to underestimate the importance of your own part in building and maintaining customer goodwill and confidence. You may know that your company's name is one of the best known and most widely respected in the whole field of radio-television-electronics. You also know that the part played by any one man in a large organization must necessarily be limited, even if he be the most important person in the firm. But here's where an important piece of psychology enters the picture. When the customer is dissatisfied, it is very easy to lose his goodwill permanently. During this time, you are the representative of your company he is in direct contact with. You are in a position to remove his dissatisfaction, in almost all cases. To him, *you* are the company, to a very large extent, and you must think of yourself that way, too.

Now, it's easy to *tell* you what you should do to have the best possible effect in building goodwill in the customer, but the actual doing can be pretty tough in some cases. Some of these difficult jobs will be tough because of the technical side, but these are relatively rare. More likely the difficulty will be a customer relation problem, particularly if there have been several calls for service before, perhaps for the same complaint. No use kidding ourselves, either. There are bound to be some customers who simply are unreasonable and generally hard to get along with for some reason or other. Either way, it's up to you to do your best not only to correct any trouble in the receiving installation, but to regain the customer's goodwill, as well. Accept the occasional difficult customer as a challenge to your self-control and diplomacy, and resolve that you will not be shaken out of your properly pleasant but businesslike attitude.

Fortunately, the percentage of really unfair or unreasonable customers is very low when we consider *all* the customers, although one difficult case may sometimes lead you to feel otherwise. Then of course, the unreasonable customer *also* spends money, and is entitled to the services promised him in his service contract. Often, too, real patience and skill on your part will result in making a good customer out of an unreasonable one. Of course, there are cases where there has been a mistake in servicing that has resulted in a good deal of unnecessary annoyance to the customer. These are the cases that require the most prompt and careful handling, for the customer really has good reason to be angry, and your job is a tough one. Such cases are uncommon, but have come up in the past, hence the practice of reviewing the individual case history of each service call was begun.

Fig. 22-7

Specific Customer Relations Techniques. – You learned earlier in this Lesson how to forestall development of any more of these "hot" cases, so we'll go on to consider some techniques to use in your relations with the customer when you're doing service work. Don't get the idea that these are just ways to "soft soap" him, or that you're supposed to become a supersalesman and not a TV technician. *The most powerful single factor in building good customer relations is curing the trouble quickly and permanently, when real trouble exists.* You must first of all be technically competent to do this, and the primary purpose of this Course is to provide you with the necessary technical knowledge and understanding. *BUT*, (and this is a big but) much of the customer goodwill and satisfaction resulting from prompt, efficient repair of his set be lost again by incorrect conduct on your part.

This is particularly true if for some reason or other the customer is angry, or in fact, in a state of strong emotion of any sort. Unfortunately, this is sometimes the case, so you must be ready to handle the situation properly. Bear in mind that the customer's complaint may not be legitimate in some cases, but that you still must do all you can to save the situation and recapture his goodwill and confidence. The pressure of modern living in big cities puts a good deal of strain on lots of people, and when some real or imaginary difficulty develops, they are likely to unload all their unconscious frustration and resentment on the first outlet that shows up, which may be you. Don't let this frighten you, however, for a little patience and self-control on your part will do wonders toward reestablishing friendly relations.

When the customer is excited, the first rule is to let him do most of the talking, while you pay close attention, in a calm, respectful way. Above all, do not start to argue back, or defend yourself or your company while the customer is getting his complaint off his chest. That will only result in heightened feelings on his part. Instead, you must deliberately remain calm and attentive, and try to actually draw out the customer a little by a few questions, leading the conversation as quickly as possible into an explanation of what specifically is the matter. The most important aspects of your conduct are to *give respectful attention, and not to offer resistance or argument.* You will find that with most people this reasonable attitude on your part will get them calmed down and in a more reasonable frame of mind themselves.

There are also customers who are shy and diffident in the presence of strangers. You are a stranger in their home, and so this sort of person may feel ill at ease with you. It's up to you to win their confidence and make them feel at ease, as otherwise you may not learn all the facts about the trouble. You already know that the information you get from the customer is an important help in repairing the trouble quickly and completely. With this sort of customer, you will usually have to take the initiative in the conversation in order to get the proper information. You can do this readily enough, starting with your natural inquiry as to what the trouble is, which you'd normally make right after you have introduced and identified yourself. Don't forget to present your identification card, as this in itself helps to establish the customer's confidence in you. Your attitude should be businesslike, but friendly, and you can usually get the customer to give his account of the trouble by asking him to describe exactly what happened when he first noticed the fault.

Usually his first statements about the trouble will give you an indication of what other questions to ask. You can keep on asking questions until you feel you have all the information the customer can give, but if the set will still operate, it's a good idea to get the customer to turn it on and tune in a picture for you. Right here is a subtle point worth remembering. You must observe the customer's procedure in operating the set without being so obvious about it that you embarrass him, for some people have a natural timidity about technical apparatus, and this may be part or all of the trouble. If the difficulty is really due to incorrect manipulation of the set controls, you must be careful to educate him in the correct way to handle them in a way that will not be offensive. This matter of customer education is treated more fully in the section following this one, so we'll go on to consider other aspects of the customer relations matter here.

Don't Undermine the Customer's Confidence. – The customer's satisfaction with his set and his goodwill toward your company and yourself are based considerably on his confidence in you. This confidence is partly the overall result of the excellent reputation your company has earned among the general public, and partly due to careful advertising in various ways. It is up to you not only to avoid doing anything to weaken that confidence, but to do whatever you can to enhance it, because it is one of the things that makes satisfied customers and repeat buying. A satisfied customer is your best advertisement.

One of the easiest ways to weaken the customer's confidence in you and your whole organization is to criticize and disparage previous work in his presence. No organization is perfect, and occasionally you are bound to come across a case where there's trouble because someone ahead of you slipped up – the last service technician, the installing crew, or maybe even the dealer, or the factory. Don't unload your tale of woe about this discovery before the customer. Instead, set about correcting the trouble if you can, or pull the chassis if you can't. But save your story for the proper person, your employer.

If the customer wants information, it is quite in order to explain what the actual technical difficulty is, if you can do it in nontechnical terms that he can understand. But don't affix blame for the condition. Doing this before the customer will not prevent such things from happening again. Reporting the matter to your employer will, because your company is just as interested in eliminating such sources of trouble as you are.

Getting Information From the Customer. – One of the first things you should do after contacting the customer is to learn whatever he can tell you about the difficulty, and how it started. We've already covered some ways to put excited or diffident customers into the proper frame of mind to provide you with this information. Once you have established this proper relationship, you can get at the business of obtaining the needed information. Often it's best to have the customer turn the set on and demonstrate the trouble, if it is still operating at all. While he is doing this, you can ask him to describe in his own language just what happened when he first noticed the fault. Usually the customer does not know the technical jargon of television any better than you do that of surgery or placer mining, but you should be able to understand his description well enough to know what happened, or at least to form a suspicion. You can then ask questions designed to discover whether or not your suspicion is correct.

Often it's important to know whether the trouble developed all at once or gradually, so be sure to inquire about any times the set may have acted up previously. Poor connections and a few similar troubles often show up weeks before they finally cause the set to quit altogether, by causing temporary difficulty that either clears as the set warms up, or is cleared by a jar or bump to the cabinet. With the number of tubes in the average television set, there is always the chance of a poor pin contact, and of course bad solder joints are a distinct possibility. Both these defects often fail to cause trouble until the set has been on and off several dozen times in the customer's home.

Service Work in the Customer's Home. – In a good many cases, you will be able to spot the trouble and complete the repair right in the customer's home, and of course this is the most desirable way to handle the job unless there is some compelling reason for pulling the chassis. It avoids the delay and loss of use of the receiver that the customer must put up with if the set goes into the shop, and it saves you a good deal of lifting and carrying work that isn't exactly fun.

Naturally you should be just as neat and careful in doing such work in someone's home as you'd want them to be in yours if the situation were reversed. Be sure to spread your drop cloth, putting it, if possible, in a place where you and it will not obstruct normal passage through the room. Keep in mind the things you learned back in Lesson 5 about avoiding even the appearance of carelessness or a lack of consideration for the customer's property. Don't even handle the the set and chassis in an overly nonchalant, offhand way, but instead use care and caution. You handle dozens of sets a day, but the customer sees only one handled, and it's his one and only. Don't be afraid to let it be apparent that you respect his set and other property, and mean to treat it accordingly.

In actually doing service work in the home, you will be more or less in contact with the customer right through the operation, at least in a good many cases. This situation does make things a bit different from working in the shop, and it's worth our while to consider some of these differences as they affect customer relations. Since you have established friendly, easy relations, it's quite likely that the customer will ask questions about the set and the trouble, and what you are doing. It isn't up to you to deliver a lecture or a running commentary, but naturally you should be pleasantly polite. However, don't let this desire to be polite ensnare you into making any promises you are not dead sure you can keep. If it is three o'clock, for instance, and there's a program on at four that the customer wants to see, don't promise to have the set in order before then unless you are double darn sure you know exactly what is wrong, and that you *can* have it finished by then. One broken promise, for no matter what reason, is remembered long after several fulfilled ones are forgotten. In fact, one of the few safe promises is to do your best to get the set repaired quickly.

Beware of Recurrent Troubles. – In trying to get the set back in operation quickly, however, you must not fail to be *thorough*. This point has been somewhat neglected in the past, with the result that at least one kind of difficulty has caused some serious customer relations problems. It goes something like this. On getting into the job, the technician finds a defective component in the faulty circuit. He replaces this with a new part, and finds that the set seems to operate properly. He then replaces the chassis, tidies up, and goes on his way. A few days later the same part fails, the customer again calls for service, another technician is sent out, and the same cycle is repeated. About the third time this happens, say within a period of a month, the customer is ready to give up television for Parchesi or charades, and his blasts of annoyance are quite likely to reach as far as the home office of your company. Don't think you'll escape them, either. But do remember that you can save the situation and prevent the loss of goodwill by simply running down the whole difficulty in the first place.

Oddly enough, this kind of trouble is usually easy to eliminate with a small amount of applied common sense. Obviously, if the same part fails twice in succession within a short period of time, there is probably a darn good reason for the failure. It *could* conceivably be that *both* components were inherently defective, but the chance is slim, and you'd better look further. This is another place where your review of the past service record of the set can save you a monumental headache. If a set shows two recurrences of an identical component failure, you should immediately suspect that some other component is defective enough to cause overloading of the part which has failed, without itself showing up as obviously defective.

A leaky capacitor or a resistor that has changed its value may cause so much current to flow through another resistor in the same circuit that it fails very quickly in service. Yet the real culprit may keep right on working for months or years without really conking out completely. Whenever you have a recurrent trouble, even a tube failure, better check into the voltages and currents in the circuit involved to see that they are normal. The Service Data for the particular chassis provides you with the normal voltage and current limits, and you can use your meter to check them.

What Jobs Can Be Done in the Home. – In general, you should try to do as many of your servicing jobs in the customer's home as the nature of the jobs will permit. But you can't do *all* of them there, and it's pretty important to have a good idea which jobs you can handle there, and which ones will have to be pulled in to the shop.

Replacement of tubes, oscillator realignment, replacement of small capacitors or resistors, replacement of controls such as the volume or contrast control, readjustment of FM traps, and most of the other regular adjustment jobs can readily be done in the customer's home. In fact, the business of narrowing the trouble down to a specific component is likely to take more time and mental effort than actual correction of the difficulty, once you've found it. That is just one reason why you should work hard at perfecting yourself in the kind of common sense detective work that permits you to narrow down the search systematically to the one spot where the trouble can be.

Some other kinds of trouble shooting are on the borderline between "pull-in" and "fix-on-the-job". If, for instance, you are dead sure you know exactly which parts are faulty, but you don't have replacements with you, it is better to leave the set, and call back later with the parts. A good practice is to call your manager for advice on the point, if you are in doubt as to when you can get back. However, if you're *not* dead sure you've located the trouble and know exactly what you need to put it right, better pull the set in. If you leave it and call back with the part, only to find it still is not fixed, you then have to pull it in anyhow, and chances are the customer is not going to have as much confidence in you after that, as he had before.

Service to Be Done in the Shop. – Inevitably, some troubles occur in television sets that cannot be serviced in the customer's home. Besides these, there are others that are more conveniently and efficiently done in the shop, even though in a pinch they *can* be done in the customer's home. In the first category are those involving i-f amplifier or overall set alignment, difficult mechanical replacement jobs, serious r-f unit trouble, replacement of parts you do not have with you, or good customer relations. These classifications were discussed more completely in considering the technical side of the servicing problem, earlier in this Lesson.

In general, your decision to pull the chassis in cannot be made until you have diagnosed the trouble correctly, and know just what the repair job is to be. However, there are bound to be some cases where for some reason or other you are unable to decide exactly what is wrong within a reasonable time. Naturally you must try to keep such failures to an absolute minimum, since a considerable proportion of them are sure to turn out to be faults that could have been repaired in the customer's home. But there is an important customer relations point involved, as well.

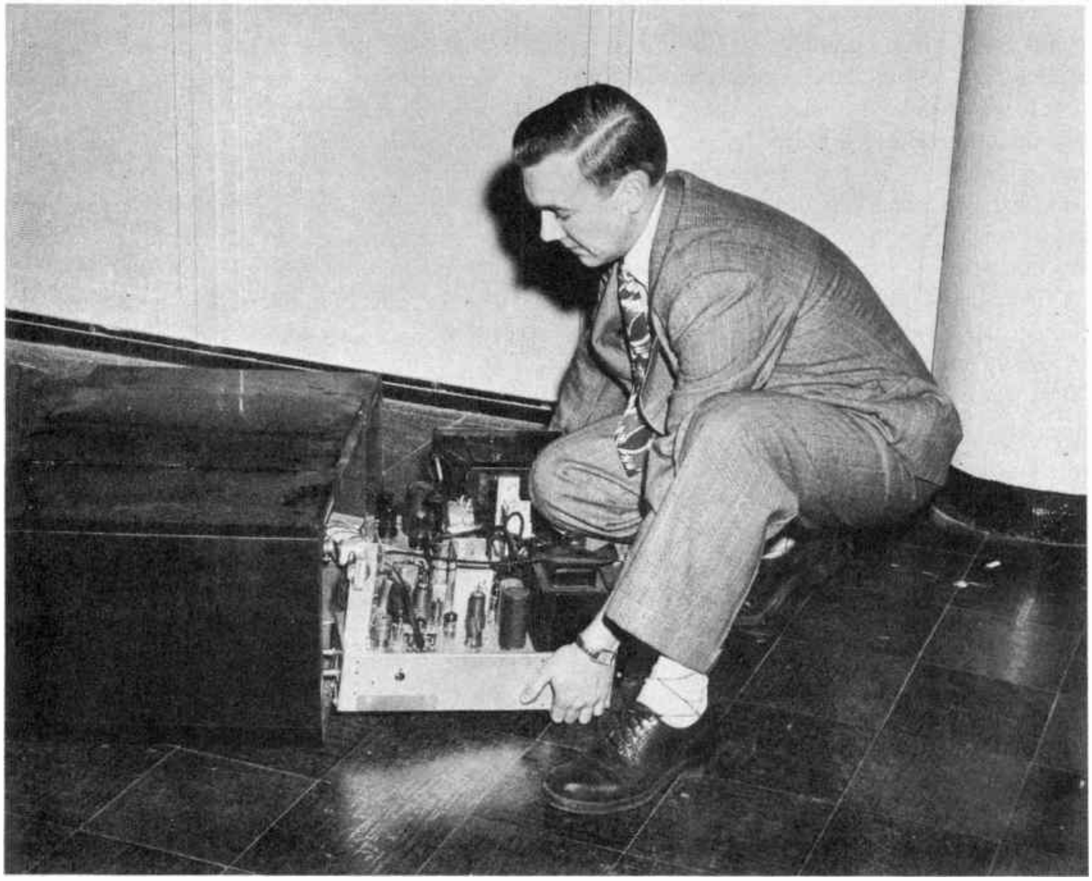

Fig. 22-8

If you are working in the presence of the customer, it is not good policy to show yourself obviously baffled and uncertain just what is wrong, or what to do next. Nor, is it wise to make too many calls to the shop for information or advice. In such a situation, if you are unable to find the trouble after reasonable effort, better pull the chassis, perhaps explaining to the customer that it requires the use of instruments you do not have in your truck.

The remaining case in which you should remove the chassis to the shop is when the customer demands it, and you can see that he will not be satisfied unless it is done. Sometimes a customer will get the idea (possibly from too many recurrent troubles) that the set just can't be repaired properly in the home. He may suspect that there are other things wrong with it that are not being checked, or he may have the idea that *nothing* involving vacuum tubes can really be repaired without the use of a battery of impressive test equipment. In such cases, don't argue, but just pull the set in, and explain the situation to your manager. Besides, the customer sometimes guesses right about those tough cases!

CUSTOMER EDUCATION

22-5. It often happens that, in spite of the work of the installation crew, there are some things about operation of the television receiver that are not perfectly understood by the customer. Even more likely, there will be other aspects of the whole television broadcasting system that affect his use of his set, which he also does not understand. It's a regular part of your job when making service calls to do whatever is needed to correct this condition, for otherwise there's a good chance for unnecessary or useless service calls to be made, and for the development of misunderstanding and bad feeling between the customer and your company. Often a little considerate, tactful work on your part will not only give the customer greater satisfaction and enjoyment from his set, and eliminate a possible fruitless service call into the bargain.

Fig. 22-9

Operation of the Controls. – We've already discussed the matter of correcting any of the customer's errors in operating the set. You must do this sort of thing in a very tactful way, of course. Keep in mind that the customer is probably not stupid, but merely uninformed. There is a big difference, as you can easily prove to yourself by opening a dictionary at random and seeing how many words there are on any page that you never knew existed. It's worth repeating that we're *all* ignorant, but about different subjects. You can suggest in improving the customer's operating technique that perhaps he has forgotten a fine point or two about the tuning that will help get the picture in better and more dependably. It *is* easy to do things in a wrong sequence, and your minimizing his mistakes and suggesting that they are merely memory lapses will help you avoid giving offense. You should be polite but businesslike, giving an impression of friendliness but never any suggestion of familiarity, even if the customer's manner seems to invite it. Overstepping the bounds in this direction can only lead to trouble, while staying inside the proprietary limits cannot do you any harm.

Transmission Conditions. – The next most common need for customer education arises from transmission, propagation, noise, or interference conditions over which a TV technician has little or no control. These cases are tougher, and require a good deal of patience and skill on your part, for they can hardly fail to sound like excuses to anyone who does not understand the phenomena involved, like reflection, oscillator radiation, etc. However, when all that can reasonably be done to cure the trouble has been done, there is nothing left but to try to make the customer understand. If there is an alternative, such as a special antenna, higher mast, or booster, that offers reasonable hope of improvement at some expense to the customer, be sure to explain about it. But be cautious in your description of possible benefits, and don't make any promises that you're not absolutely sure you can fulfill. Nothing is likely to be more damaging to goodwill than that.

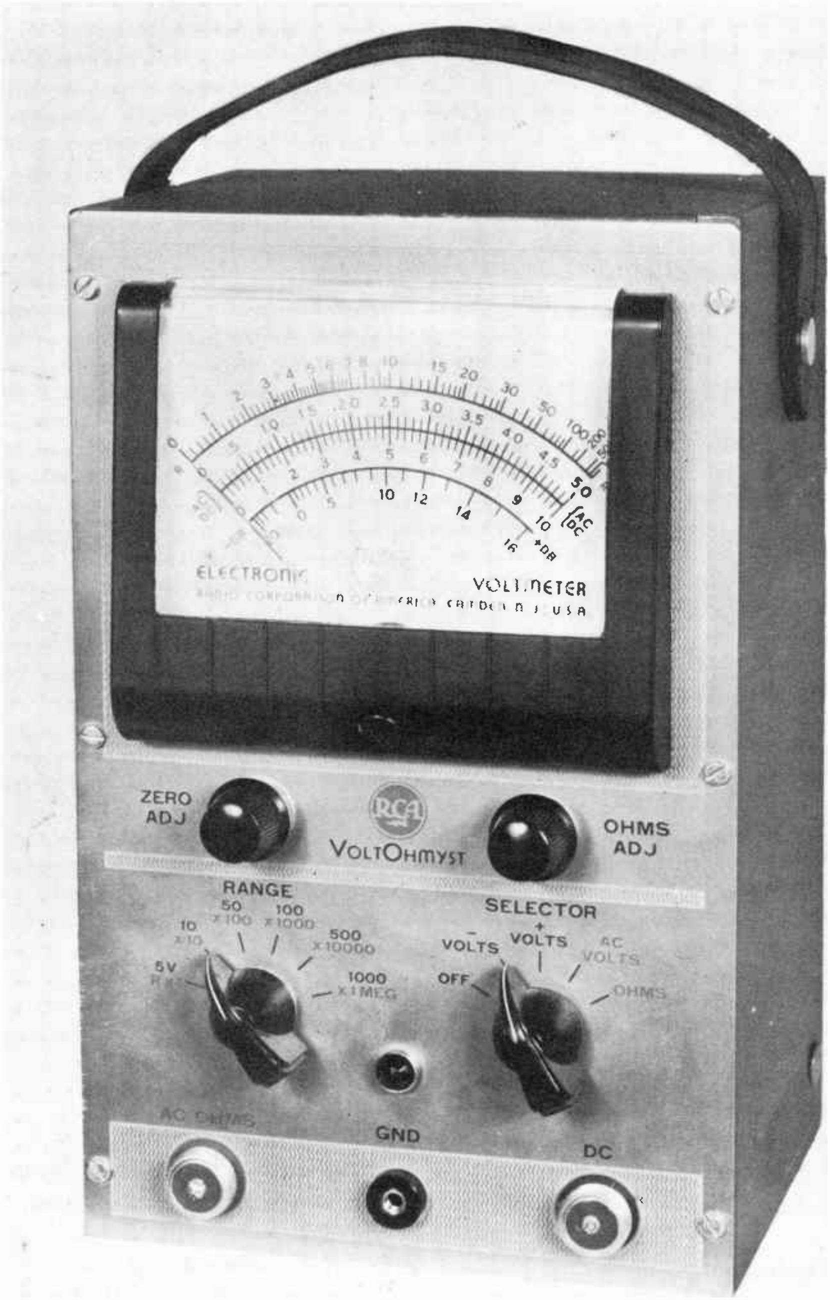

Fig. 22-10

If propagation difficulties such as weak signals, ghosts due to reflections, or garbled sound due to multipath distortion are present, try to explain the matter to the customer in nontechnical terms that will be familiar to him. The most difficult sort of case for this task is one where several of the customer's neighbors enjoy consistently better reception than he does. You'll have to make clear to him that sometimes even a few inches or feet difference in the positions of two antennas makes the difference between no picture and a box seat at the World Series. Naturally you will also have to assure him that you've exhausted the possibilities of his location unless he wishes to authorize you to try some special measures. It's advisable to consult your manager about any such measures, too, and have a clear understanding of what to charge the customer for such work.

Interference Problems. — In the matter of interference, you have an even tougher row to hoe.

If the signal just doesn't reach his antenna, he can usually resign himself to the situation, but the mere suggestion that someone else is causing his trouble, legally or illegally, is often enough to set off a minor explosion. Again you must try to make the true situation clear. If the interference can be located, you must, of course make all possible efforts to control it at the receiver. However, in a lot of cases this is simply impossible, and when that is so, the task of getting rid of it is likely to be both long and painful. *After* you've done all you can to eliminate the trouble at the receiver, explain the situation to your client, and if you can trace down the source of interference, do so. However, better review the parts of Lesson 13 that apply if you have forgotten details, because interference is a large problem, and we cannot take space here to repeat everything said about it.

One important point to get across to the customer is that in almost every case, the owner of an interfering device does not realize that it is causing interference. It is not deliberate, in other words, and he is not being singled out for persecution. Another vital point is to make it clear that, due to the extreme sensitivity of television receivers and their wider bandwidth, they can be interfered with by signals that are within the present legal limit of radiated energy. This is unfortunate, but it is a condition no one could foresee, and must be borne by everyone until something can be done to correct the situation.

Explain Antenna Limitations. – If the trouble is due to restrictions in the building as to antennas that may be used, or some similar ruling, you are partially off the hook, as most people are aware that, extravagant claims to the contrary, an outside antenna is often necessary for good reception. If you do your best to provide good reception with whatever antennas are permitted, such as the internal antenna, or an indoor V, or window mount, you won't usually find that the customer is unreasonable. However, you should make clear to him that conditions inside the building are very erratic, and practically unpredictable. Otherwise, if he learns later that one side of the building eighteen floors higher is getting good reception, he may shoot in another service call, on the theory that if it can be done for the other fellow, it can be done where he is, too. This sort of "preventive education" can do a lot to cut down on useless service calls if you practice it consistently.

Keep Customer's Viewpoint in Mind. – It's a good idea to try to put yourself in the customer's place when you're faced with such an educational problem as that just described. Remember that, fascinating as such technical details as standing waves and shadowing are to you, he mostly wants the wrestling matches, and Kukla, Fran and Ollie for the kids. If you can't get them for him, try to make it clear why you can't without sounding like Marconi inventing radio through a thick felt hat.

One last point about customer education is worth mentioning. When a set has been in service for some months or years, there is likely to be some slow but appreciable change in the values and operating efficiencies of some of the components. This may result in a gradual loss of performance that goes on so slowly the customer is not aware of it. In strong signal areas, sets can drift pretty far out of alignment, or lose quite a bit of gain before the trouble shows up noticeably. When you run into a case of this kind, it's a good idea to explain it to the customer, making it clear that this is perfectly normal, and does not indicate a defective set. He may ask why this is not true of ordinary radios (it actually is, but to a lesser degree), and you can then call his attention to the much higher frequencies and wider bandwidths used in television. The remedy for such a condition often is replacement of several tubes and more or less complete realignment, and naturally this is a job to be done in the shop, with the proper instruments.

CUSTOMERS' QUESTIONS

22-6. In general, you will be able to answer most of the customer's questions yourself. Be patient and as informative as you can without interfering with your work too much. Naturally, politeness and restraint should be practiced here, too. Never forget that your answers are usually taken as representing your company's considered opinions, unless you carefully explain that they are not. Also, be careful in answering questions regarding company policy and practices, for here again you may unintentionally put yourself or your company in a very embarassing position that will lead to lost goodwill later. If you are in doubt on any such points, simply explain that you aren't sure, and suggest that he call your office and consult someone there who is better informed on such matters. This is one of those cases where it is far better to say you don't know than to guess.

Most of the customer's questions will probably deal with such technical matters as why the set sometimes jumps out of hold when the oil burner or refrigerator starts up, or why the programs on one channel smell of Chanel, and those on another of Eau de Goat. Do your best with such as you can reasonably answer, bearing in mind that he is probably about as intelligent as you are, and at least worthy of common respect as a fellow human being (*and* customer, don't forget that), even if his educational background seems less extensive than yours. Naturally you should not be effusive, or volunteer a lot of information to make conversation. But don't be contemptuous or impatient, or try to brush him off with meaningless answers. Instead, put yourself in his place, and act as you'd expect a doctor or attorney calling at your home to do.

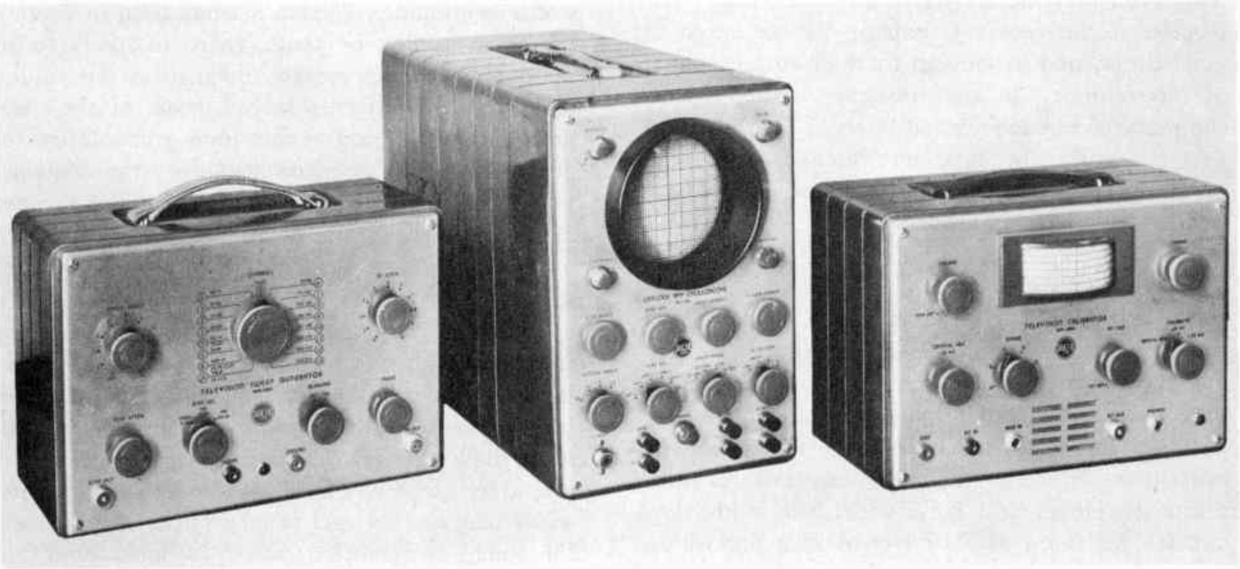

Fig. 22-11

◆

NOTES

NATIONAL SAFETY COUNCIL · CHICAGO · PRINTED IN U S A.

HOME STUDY
TELEVISION
SERVICING COURSE

PREPARED BY

RCA INSTITUTES, INC.

A SERVICE OF RADIO CORPORATION OF AMERICA

HOME STUDY DEPARTMENT
350 West 4th St., New York 14, N. Y.

UNIT SIX

Lesson 23: TELEVISION FUNDAMENTALS (Part 1)
Lesson 24: TELEVISION FUNDAMENTALS (Part 2)
Lesson 25: LOCALIZING TROUBLES IN THE TV RECEIVER
Lesson 26: TROUBLESHOOTING TECHNIQUES

TELEVISION SERVICING COURSE

PREPARED BY

RCA INSTITUTES, INC.
A SERVICE OF RADIO CORPORATION OF AMERICA

HOME STUDY DEPARTMENT
350 West 4th St., New York 14, N. Y.

LESSON TWENTY-THREE

TELEVISION FUNDAMENTALS (PART 1)

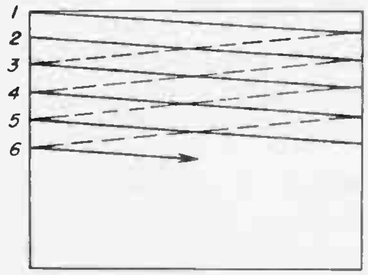

Lesson 23

PROBLEMS IN PICTURE TRANSMISSION

23-1. For someone starting to learn the fundamental principles of television, the question of how a picture can be transmitted by an electrical system is possibly the most important problem in the TV system. The idea of transmitting sound electrically doesn't seem so difficult. We're not considering now the radio broadcasting system for transmitting the sound or the picture, since the essential requirements are similar for radio transmission of either a sound signal or a picture signal. What is very different, though, is the method of translating a picture, such as the one shown in Figure 23-1, into a corresponding electrical signal and then converting it back into a picture again.

If we take a little time to consider the nature of sound, and also analyze what makes a picture, we can see that the main reason for the relative simplicity of an audio system is the fact that the thing we call sound has *only one specific value at any one time*. However, a *visual scene represents light from many different parts of the picture, all of which can have different light values simultaneously*. This complicates the job of converting the picture into an electrical signal, and is the reason why the practices in television broadcasting must be standardized to a greater extent than is necessary in a sound system.

The Nature of Sound. – As an example of a sound program, Fig. 23-1 shows a stage scene, with Marguerite Piazza and Robert Merrill singing. Close by is a microphone to pick up their voices and convert them into an electrical audio signal. The vocal cords of the singers produce waves of varying air pressure, which are the sound waves reaching our ears. When these waves strike the microphone, mechanical vibrations are produced, causing equivalent electrical variations in the circuit to which the microphone is connected.

To illustrate how sound waves cause corresponding electrical variations, consider the graph of air pressure for a single-frequency, or "pure" tone, as shown in Fig. 23-2. Such a tone, of a single frequency, might be made by a tuning fork. Fig. 23-2 (a) represents the variations of air pressure, above and below atmospheric pressure, at some point near the sound source – such as at the diaphragm of a microphone. As the pressure on the microphone increases and decreases, a voltage is generated in the microphone. Its graph is shown in Fig. 23-2 (b). It is apparent that the voltage graph is an exact replica of the alternating component of the pressure wave.

If the sound source is a human voice, or a musical instrument, the pressure graph will contain many frequencies instead of just one. It will, in other words, be non-sinusoidal. But no matter how complex its waveform, the air pressure at the microphone can have only one value at one instant. Hence, the variations in air pressure – which constitute the sound wave – can be duplicated by corresponding variations in an electrical voltage. This is true even if the sound source consists of many voices. At any one instant, the air pressure at the microphone is the algebraic sum of the pressures caused by all the sound sources – and this sum can have only one value at any one instant.

The sound variations can have only one pressure value instantaneously because they are produced in successive order, with the changes in pressure following one another in time. It need not take very long to produce a sequence of sound variations, such as your saying "O.K.", but the fact remains that any change in the sound signal must come after some previous value. After all, nobody can say two words at the same time – not even the smoothest talker. As a result, it is relatively easy to translate sound waves into an audio signal, compared to the problems of converting all the elements of a visual scene into an electrical signal that corresponds to the picture.

Elements of a Picture. – Analyzing a visual scene, suppose that the scene shown in Fig. 23-1. is being televised. The TV camera picking up the picture part of the program must be an electrical eye able to "see" the same thing that you would see if you were watching the show.

Your eyes can see the scene as it actually is – a composition of light and dark areas arranged in a definite order in space with respect to each other. These individual parts of the picture can have different light values, representing various light intensities, all at the same time. Referring back to Fig. 23-1, you can see that some parts of the picture are white and others are black, in

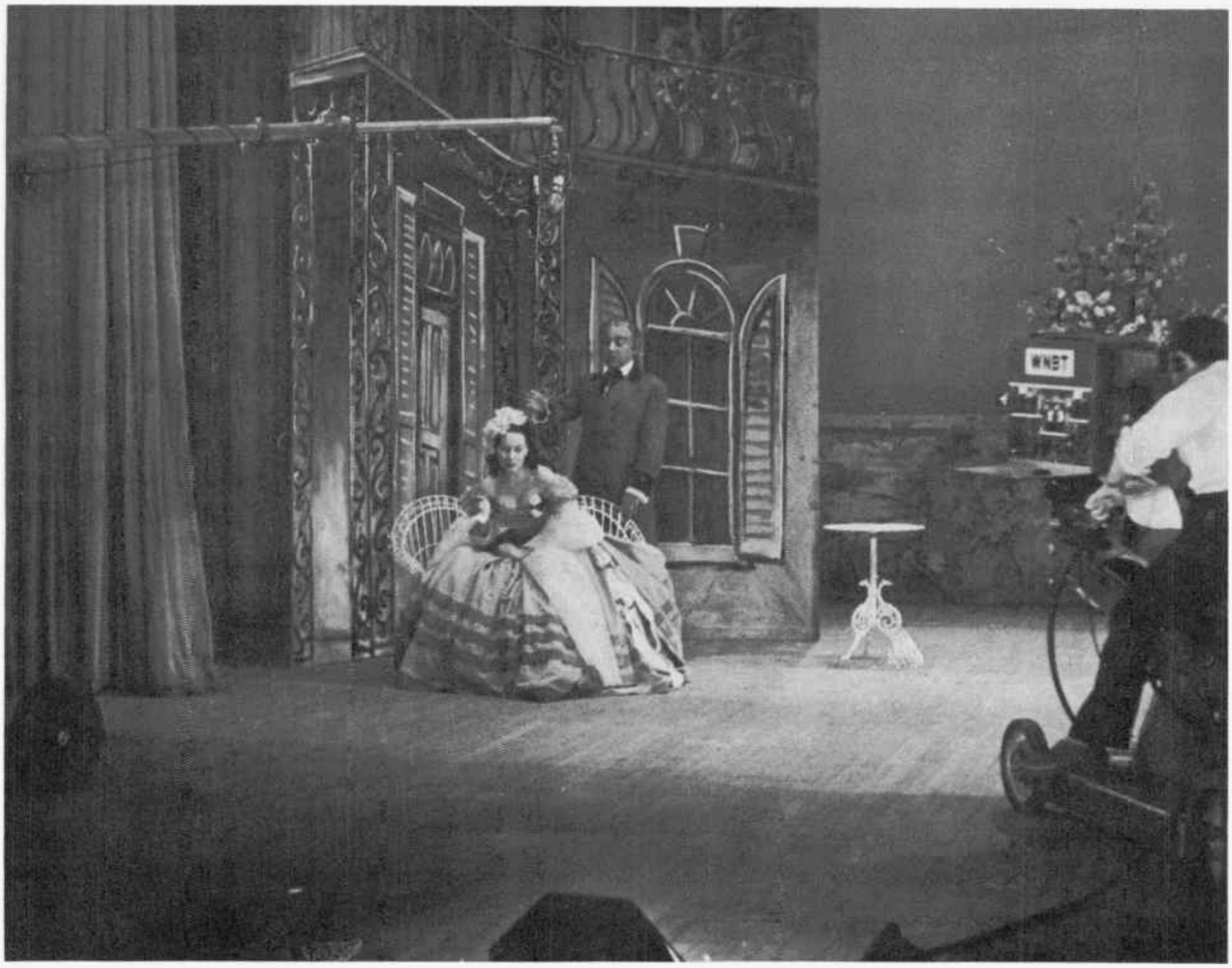

Fig. 23-1

addition to the many intermediate shades of gray. Now consider the smallest piece, or detail, of the picture which your eye can distinguish as a separate unit. Let's call this small piece a *picture element.* It follows from our definition that any picture element is so small that its light value does not vary within its own limits. (Note that a large area of uniform light intensity is not a picture element, but a large group of similar picture elements.) The light values of two adjacent picture elements, however, may be different. The light value of each picture element is one small piece of *picture information*. If we know the light intensity values of all the picture elements, and can arrange them in just the right order with respect to each other, we can reproduce the entire picture.

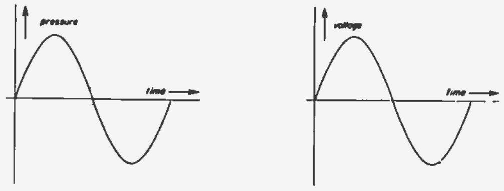

(a) (b)

Fig. 23-2

When we view a scene, seeing all the picture elements and recognizing their different light values is no problem because the human eye is capable of doing this. What our eye sees is the light reflected by the objects in a scene, not the objects themselves. The sensation we know as sight is caused by this reflected light. The lens of the eye focuses the light rays to form an *optical image* of the scene on the inner surface of the eye, which is called the *retina*. This means that light from any small part, or picture element, of the scene, falls on only one corresponding small part of the retina. The retina is equipped with no less than 18,000,000 separate light-sensitive organs, known as *rods* and *cones*. Each reacts only to the light from one particular part of the picture. In effect, the eye has an individual receiver for each tiny detail of the picture. The brain fuses the sensations from all the rods and cones into an integrated sensation that we recognize as the picture.

However, an electrical viewing device like TV camera, which converts the picture into a corresponding electrical signal for transmission to the receiver, cannot operate in quite the same way as your eyes. The main difficulty is that the picture elements usually have different values of light intensity *all at the same time*. The electrical circuit conveying the picture, however, can handle only one item of picture information at any one time. This follows from the fact that the current or voltage wave corresponding to the picture information can have only one value at any instant.

What this all boils down to, then, is the fact that the picture must be divided into its individual picture elements for conversion to an electrical signal, so that the circuits can handle the picture information in a definite order without confusing the information in different parts of the picture. It naturally follows that when the picture is reproduced at the receiver by reassembling the elements, there is the associated problem of putting the parts together in their correct positions. Otherwise, the reproduced picture will appear to be torn apart, with the elements put back in the wrong place —if, indeed, it is recognizable at all. Of course, this problem of properly arranging the picture elements is in addition to the fundamental requirement of reproducing each picture element with the same light value as in the original picture.

Don't despair, though. After all, we know that this complex job of broadcasting a picture can be, and is being done — and very well too. Still, it's a good idea to appreciate the fundamental problems of televising a scene so that you can understand why a definite procedure must be followed in any system for transmitting a picture.

AN ELEMENTARY SYSTEM OF PICTURE TRANSMISSION

23-2. Now that we know what a picture consists of, we can examine some simple alternative methods by which the picture can be "transmitted" from one place to another. Of course, we must rule out the simple expedient of transporting the picture bodily. That would be easy if the picture were a photograph or a painting, but impracticable if it were a football stadium full of people.

As an example of a possible arrangement for transmitting a picture, Fig. 23-3 illustrates a very simple television system.

For simplicity, let us assume that the picture is stationary. We'll deal later with the problem of showing motion in the scene. In order to reproduce the distribution of light values in this stationary picture, the image at the transmitter is divided into a large number of elementary squares, called the picture elements. Some of these are white, some are black, and others are gray. Each represents an individual detail of the visual information in the picture that has to be transmitted. The receiving surface, on which the picture is to be reproduced, is divided into corresponding squares, each of which can be filled in when the values of light intensity are known for the different elements.

Sending the Picture. — We can have the man at the transmitter send to the receiver the information in each square of the picture, starting at the top left corner of the image. For the first square here, the transmitter must let the receiver know that this picture element is white. Just how this fact is transmitted to the receiver is not the point right now — it might be by telephone, radio broadcasting — or smoke signals, for that matter. As the man at the transmitting end points to each square in consecutive order from left to right across the top horizontal line, he tells the receiver the light value for each of the elements. For the picture in Fig. 23-3, all these squares in the top line are white, corresponding to the white sky of the picture. Going to the next lower line, the same procedure is followed, and this continues downward in a progressive order, line by line, to include the entire image.

Many of these lines will contain squares having other values of light intensity. When we come to the part of the picture showing the shadowed parts of the chimney, the elements are black; for the building in the background, the elements are light gray. All these details of the picture information will be transmitted sooner or later, though, because the man at the transmitter will point out each detail as he covers the entire image in a prearranged order.

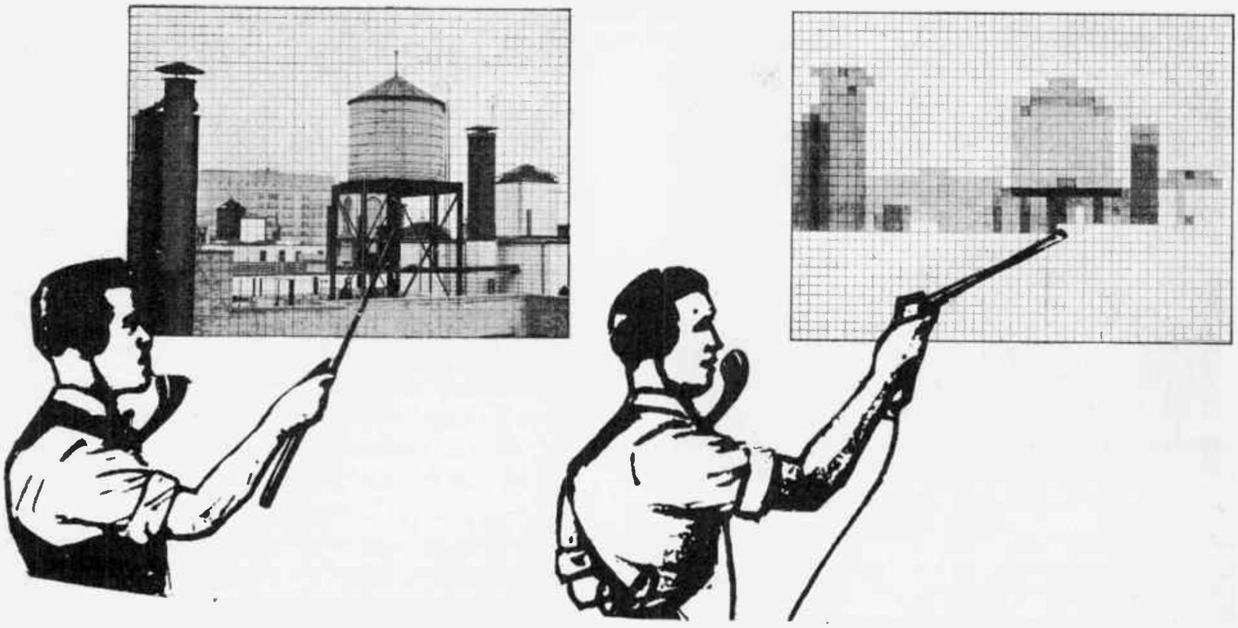

Fig. 23-3

Note that the man at the transmitting end can give the receiver only *one light value* for each picture element. Some of the squares at the transmitting end may be part black and part white. In such cases, the transmitter must convey the *average* light intensity of each square. Remember that we defined a picture element as being small enough that the light intensity is uniform over its entire area. Thus we cannot transmit any detail smaller than the size we have chosen as a picture element. That is why such details as the ladder on the water tank are lost in the transmission process, and the entire received picture is only a crude reproduction of the original scene.

Scanning. – The procedure of picking out the information in all the elements of the picture in this definite, consecutive order is called *scanning*. It is much like what you do in reading a printed page, starting at the top left, scanning across the line, and covering the entire page line by line to the bottom.

Reproducing the Picture. – As the transmitter sends to the receiver the required information on the shading for each square, these are filled in at the receiver. In this system, the normal condition is white for the surface on which the picture is reproduced at the receiver. A white square can be left as is, therefore, to show the white information. Making black squares shows the black elements of the picture. Some squares are shaded to show gray details, or to represent the average brightness of a square that is not of uniform brightness. Since this is done for all the elements in the picture, following the same scanning pattern used at the transmitter, the entire image can be painted on the receiving surface to reproduce the transmitted picture.

Detail in the Picture. – By looking at Fig. 23-3, you can plainly see that there are disadvantages to this simple system that make the quality of the reproduced picture very much worse than what we actually see in today's television receivers. The main reason for this is the fact there cannot be a great number of squares to provide small details of picture information, since the pointer at the original picture and the brush filling in the reproduction are relatively large. Naturally, the brush cannot paint a detail that is smaller than its own area.

Because the individual picture elements are comparatively large, the squares corresponding to the picture details in our elementary system can only give a rough approximation of the distribution of light and shade in the image. Comparing this to the printed reproduction in Fig. 23-4 on the next page, which has approximately the same quality as a photograph in a newspaper, the difference is obvious.

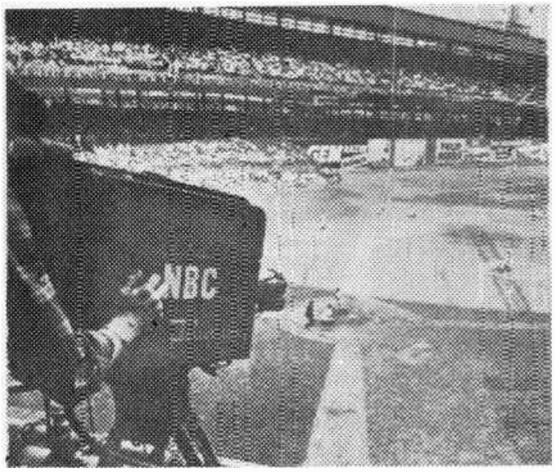

Fig. 23-4

If you examine this picture closely you can see the rows of small dots, representing the fine detail in the scene. Viewing the photograph from a foot or two back, the picture seems to shade continuously from light to dark because the individual elements are so small. A picture like this has about 30,000 picture elements, compared to 1,728 details in the rough reproduction illustrated in Figure 23-3.

The Factor of Time. – Another disadvantage of our elementary TV system is that it takes a long time for the job of analyzing the picture into its basic elements, and also for the piece-by-piece reassembly of the reproduction.

In a practical system, all the picture elements must be scanned quickly. If there is motion in the scene, any one area of the picture may change its value of light intensity. Suppose that smoke starts pouring from one of the chimneys in Fig. 23-3. Some of the picture elements that were white in the sky will become black. As the smoke moves across the scene, some other white elements become black, and then change back to white as the smoke cloud passes. The entire picture must be scanned within a fraction of a second, therefore, to show the visual information in the scene before it changes to any appreciable extent.

In addition, the image must be scanned rapidly in order to minimize the problem of *flicker* in the picture. We'll discuss this at greater length a little later.

Parallel Transmission. – One way to overcome the problems associated with the need for scanning the picture rapidly would be an arrangement where all the individual picture elements are transmitted at the same time. This can be called a *parallel transmission system,* since all the picture information is transmitted to the receiver at the same time in a parallel order, instead of the "single file", one-at-a-time method, in which the elements are scanned in consecutive order.

The disadvantages of a parallel transmission system for the television picture will be apparent if you remember that there would have to be as many individual circuits as there are picture elements. This would certainly be impractical for radio transmission of a picture with as many as 125,000 picture elements. (This is approximately the number of details in our present television picture.) The parallel method of transmission is not used in the commercial television broadcasting system, therefore, since this is a case where the proposed cure would be worse than the original trouble.

ESSENTIALS OF PICTURE TRANSMISSION

23-3. The big problem is still that of transmitting enough picture elements consecutively, and doing it fast enough. About the only physical phenomena capable of acting with the required speed are electrical. So we can see that a practical television system will have to be an electrical system. Let us now consider what the *electrical* requirements of such a system would be.

Photoelectricity. – The first need in any tele-system must be some means of converting light into electricity, in order to translate the optical image into an electrical signal for transmission to the receiver. This conversion is possible because light can cause electrons to be emitted from the surface of some materials. Such electrons, liberated by the action of light, are *photoelectrons,* and the action by which they are released is called *photoemission.* (Photoelectrons are no different in their nature or properties from the electrons you have been studying right along. The name merely indicates that they have been freed from some substance by the influence of light.)

Three substances commonly used to supply photoelectrons are lithium, potassium and cesium. Cesium is the one most commonly used in the television system. It is the most active for light produced by ordinary incandescent lamps, and its response to different colors approximates the human eye's response, making it possible to portray the image in black and white with nearly its true tonal values.

Some additional characteristics of the photoemission process are important. The emission of photoelectrons from the illuminated surface is practically instantaneous, which eliminates the time factor as a possible source of trouble in the photoelectric conversion process. One disadvantage, however, is the fact that photoelectric materials generally have low sensitivity, which means that not much electricity is produced by the incident illumination. Typical values of photoelectric current are only in the order of several microamperes for high light levels. Finally, and what is the most important and fortunate feature of the conversion process, the *number of photoelectrons* produced by the incident light can be made *proportional to the light intensity.*

In order to collect the emitted electrons to provide a photoelectric current, a phototube such as the one in Figure 23-5 can be used.

Fig. 23-5

This consists of a large photosensitive surface that functions as a *photocathode* to emit electrons, an anode to collect these photoelectrons, and the glass envelope enclosing the two electrodes in a vacuum. (Gas phototubes have greater sensitivity, but their current is not directly proportional to the light intensity.) Referring to Figure 23-5, the photocathode is the large curved surface, while the anode is the thin rod down the center, allowing the cathode to intercept as much of the incident light as possible. Notice the corresponding symbol for a phototube, in Figure 23-6, with a curved line for the cathode and the dot for the anode.

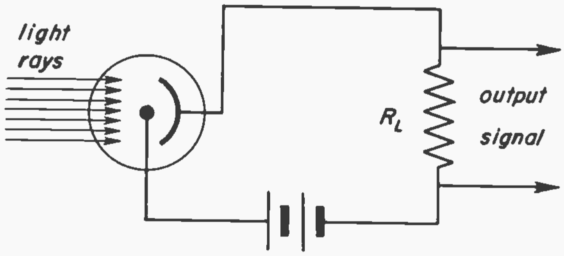

Fig. 23-6

When the phototube is connected into a circuit, as shown in Figure 23-6, the photoelectric current produces an output signal that varies with the light intensity. As the incident light on the photocathode causes the emission of electrons, they are collected by the anode and returned to the cathode through the external circuit, producing a varying output voltage across the load resistor R_L. By means of the photoelectric effect, therefore, it is possible to produce signal variations corresponding to the shades of light intensity in the picture.

There is one other requirement, of course, before the output voltage can be considered to represent the picture. The phototube current at any instant must be caused by the light from just one picture element. If the elements along one line, or row, are used consecutively, one at a time, this requirement is met, and the time variations of the phototube current (or of the output voltage) will correspond to the light variations along that line.

Since the number of photoelectrons is proportional to the light intensity, the white picture elements will provide more photoelectrons, and therefore more phototube current, than the darker elements. Thus the *changes in the phototube current and output voltage correspond to changes in light intensity from one element to the next, throughout the range of light values from white to black.*

Fluorescence. – When an electric signal corresponding to the desired picture information is available, there must finally be some means for converting the signal variation back into light to reproduce the visual image. In order to do this, the screen of the picture tube reproducing the image is coated with a *fluorescent* material, which is able to emit light when it is bombarded by electrons in the electron scanning beam. This ability to convert electrical energy into visible light is a property of many substances, which are usually combined to produce phosphors. These phosphors are usually compounds of the light metals, such as zinc, cadmium and calcium, with a non-metals such as sulphur, silicon and oxygen, These compounds may be mixed to produce fluorescent light of almost any desired color – green, red, blue or white.

Why We See a Complete Picture. – An important part of the success of television depends upon a characteristic of the human eye called *persistence of vision.* When light falls on the retina of the eye, the sensation of sight continues for a fraction of a second after the light has been extinguished. You probably have noticed this effect after looking at a bright source of light. It is this "persistence of vision" characteristic of the eye that makes it possible to see a complete television picture, even though the image is reproduced by showing one picture element at a time. If the picture elements of the reproduced picture are presented in quick enough succession, the sensation produced by the first element still persists when the last element is presented. Hence we have the sensation of seeing all picture elements at once.

The last element of the picture must be shown to the eye before the first one has faded. Just how long the sensation of vision persists depends on the brightness and additional factors, but a time of 1/25 to 1/30 second is long enough to enable the eye to integrate all the picture elements in the image and see them as a whole unit.

The persistence of vision of the eye is assisted by the fact that each part of the phosphor continues to emit light for a fraction of a second after it is bombarded momentarily by the electron beam. But since the light of each point on the phosphor must be extinguished before the beam returns to it, this fact alone would not account for our seeming to see all picture elements at once.

Picture Repetition Rate. – The entire television picture is completely scanned in 1/30th of a second. After all of the picture elements in the image have been scanned, the same procedure is repeated continuously to provide 30 complete picture *frames* per second. Since all the elements in the picture are presented to the eye within the short time of 1/30 second, and this time is short enough to take advantage of the eye's persistence of vision, the reproduction appears as a complete picture, continuous in time as long as the electron beam continues to scan the picture area.

Motion in the Scene. – A repetition rate of 30 frames per second is rapid enough to show motion in the scene. The idea of how motion is reproduced in the picture is illustrated by the method followed in showing commercial motion picture film. Fig. 23-7 shows a strip of motion picture film, consisting of several picture frames, each one of which is a complete still picture. When this film is run through the film projector, the film frames are stopped and shown on the screen one at a time in rapid succession.

While the film is moving through the projector, nothing shows on the screen because the light source is blocked by a shutter in the projector. Light is projected onto the screen only when the film is still, projecting a rapid succession of still pictures that appear to show motion in the scene. The reason for the apparent motion is that in each film frame the position of the subject differs slightly from the preceding one, as can be seen by examining the individual frames in Fig. 23-7. This appears as a smooth and continuous change that shows the motion in the scene, when the still frames are projected rapidly enough – again because of the persistence of vision of the eye.

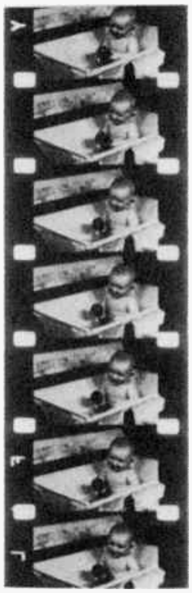

Fig. 23-7

If the individual frames do not follow each other quickly enough, the eye notices the brief intervals of darkness between successive frames. The picture then seems to *flicker.* But if more pictures per second are shown, and the dark intervals are shorter, the flicker becomes unnoticeable.

The frame repetition rate in commercial motion picture practice is 24 per second. This is fast enough to portray motion, though not entirely without flicker. In motion pictures, the flicker is overcome by stopping the film long enough for each frame to be shown *twice.* Although only 24 different pictures are shown each second, the effect is the same as though 48 frames were shown, and flicker is eliminated.

In television, the frame repetition rate is 30 per second. Since this is faster than the motion picture rate, it is certainly fast enough to show motion in the scene as continuous. But some flicker is still noticeable even at this higher rate. This flicker is overcome by the use of *interlaced scanning,* which is described in detail in Sec. 23-8 of this Lesson.

Summary. – We can summarize the essentials of an electrical television system as:

1. A *photoemissive* material, which converts light into electricity.
2. A *fluorescent* material, which converts electricity back into light.
3. Some means for *scanning* the scene rapidly, so that the electric current generated by the photoemissive material will represent all the elements in the picture.
4. Some means for reassembling the picture elements from the electrical signal, so as to cause the fluorescent material to give off light at the right places and at the right times.
5. A means by which the electrical signal may be sent from the transmitter to the receiver.

We have already explained the first two essentials. In the next section, we'll explain a simple method by which the third essential – scanning the scene rapidly – may be accomplished. The last two essentials will be explained in connection with the actual operation of the present day commercial television system.

GENERATING THE VIDEO SIGNAL

23-4. One of the simplest methods of generating the desired picture signal uses a phototube arrangement with a rotating disc. The disc is illustrated in Fig. 23-8.

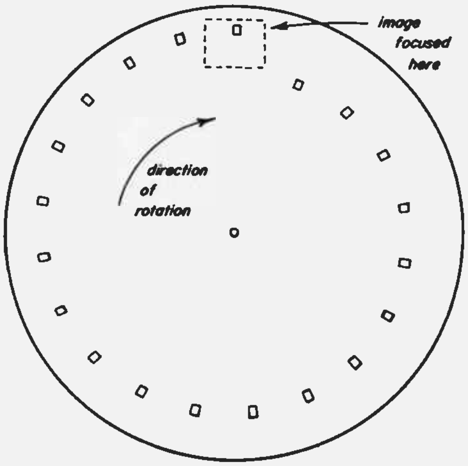

Fig. 23-8

Disc Scanning. – Called the Nipkow disc after its inventor, this is a large, flat sheet of thin metal with small holes equally spaced along a spiral path near the outer edge. The disc is mounted on a horizontal shaft so that it can rotate at a very high speed in order to scan the picture. This method of generating the video signal is one of the earliest systems employed in the development of television. It's not actually used today because of its mechanical limitations. Although electronic scanning has replaced the Nipkow disc completely, the disc scanning system offers a simpler example to illustrate the basic idea of how the picture signal can be generated, and how it represents or conveys the picture information.

The scene to be televised is focused by an optical lens onto a small area of the disc, in such a position that the holes can sweep across the image in nearly straight lines as the disc rotates. Because of the spiral path of the holes, each one scans across a line of the image below the previous horizontal scanning line.

On the opposite side of the disc is a phototube, which can receive light from the optical image passing through only one of the holes at a time. The arrangement from a side view would be like Fig. 23-9 on the following page.

The output current, at any instant, is proportional to the intensity of the incident light. For bright parts of the image the output of the phototube has a relatively high amplitude because more light from the image can then reach the phototube, as compared to the darker parts of the picture. As a hole scans across the picture elements in one line, therefore, the phototube produces signal output corresponding to this visual information. Since the holes scan complete lines in progressive order down to the bottom, after one complete revolution of the disc the complete image is scanned and the phototube's output signal corresponds to the entire picture.

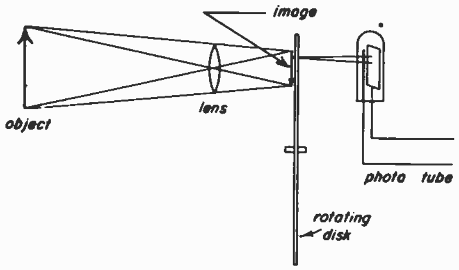

Fig. 23-9

The Photoelectric Current and Picture Information. – The way that the electrical output of the phototube varies in value with the changes of light intensity along one horizontal line of the image is illustrated here:

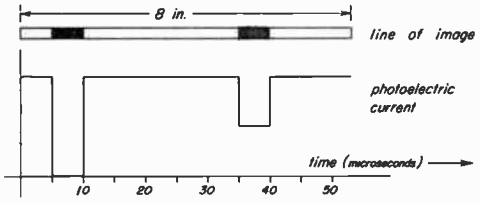

Fig. 23-10

At the top of the figure is shown the picture information for one line of the image, while directly below are the corresponding electrical signal variations. For white parts of the image, the photoelectric current is maximum; there is no output for black elements, representing zero light intensity. Gray areas of the picture produce intermediate amounts of current, according to the light intensity. The important point in the illustration is the fact that *changes of current* in the electrical signal are equivalent to proportional *light intensity variations* in the picture. This signal is called the *video signal*, from the Latin word video, meaning "I see."

Notice also that the element of *time* in the electrical signal corresponds to *distance* in the image. The "black" value of the signal, occurring 5 microseconds after the start, belongs to the part of the picture 0.8 inches from the left edge. If this signal variation should be displaced in time to occur later, it would reproduce the picture information in the wrong place. This equivalence of time in the electrical signal to distance in the image is due to the fact that the elements of the picture are scanned in a sequential order, which means that different parts of the picture are converted to an electrical signal at different times.

The current variations in Fig. 23-10 also illustrate why the video signal frequencies corresponding to the picture information are much higher than audio frequencies. In practice, the video signal includes variations in amplitude that correspond to frequencies up to 4 mc. The time axis in Fig. 23-10, which is marked off in microseconds, indicates the reason for such high signal frequencies. Since the time for scanning one horizontal line of the picture is in the order of microseconds, the electrical current or voltage variations corresponding to the picture elements of one line occur within a very short time. In small details of picture information, the signal amplitude may change within a fraction of a microsecond, producing signal currents containing frequencies of several megacycles per second. This point will be discussed further in Lesson 24.

Limitations of Disc Scanning. – It is fairly obvious that the Nipkow disc is a cumbersome thing at best. The image can be broken up into no more scanning lines than the number of holes in the disc. And the holes can be no closer together than the width of the focused optical image. In order to have enough holes to give the same amount of picture detail provided by present television standards, and using a focused image only two inches wide, would require a disc 28 feet in diameter! This is obviously impractical. A disc of reasonable size would give only a rough reproduction of the original scene, similar to that shown in Fig. 23-3. Add to this the mechanical difficulties of suppressing vibration of even a 3-foot disc whirling at around 1800 rpm, and it is clear that disc scanning just isn't good enough. There are other limitations, too, in such a system. For one thing, the greater part of the light focused on the disc is wasted. The only part of it that produces a video signal is the light shining on the hole.

For all these reasons, the mechanical scanning disc has been replaced completely by *camera tubes*, which combine in one electronic device the functions of the scanning disc and the phototube of the Nipkow system.

The two most commonly used camera tube types are the iconoscope and the image orthicon.

The latter is today the more commonly used of the two. Both will be explained in some detail in Sec. 23-6.

HOW THE TELEVISION SYSTEM OPERATES

23-5. We have now considered three of the five essentials of a practical electrical television system. We can now try to put these essential elements together, and see how they fit into the overall pattern of today's television system. We'll start by considering a simplified block diagram of the system, thus:

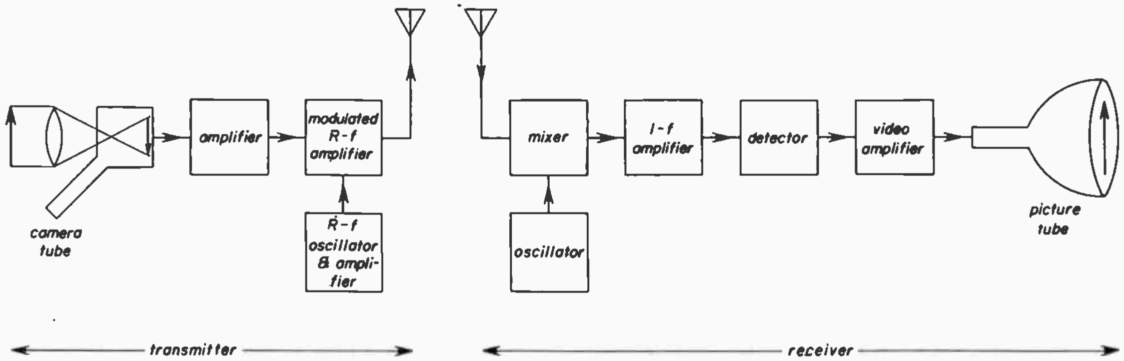

Fig. 23-11

This diagram does not indicate the sound part of the system, since we are presently concerned only with transmitting the *picture*. We know that sound transmission by radio is a much simpler process.

Similarity to Radio. – Notice that radio transmission of a picture signal is very similar to the way a sound signal is transmitted in conventional radio broadcasting. A high frequency carrier wave is amplitude-modulated with the signal that corresponds to the desired information, and the modulated carrier wave is radiated from the transmitting antenna to the receiver. This process was discussed in Lesson 21.

The similarity is also evident in the superheterodyne receiver. The modulated r-f signal intercepted by the receiving antenna is coupled to the converter stage, where it beats with the local oscillator output to produce the intermediate frequency signal for the i-f amplifiers. After i-f amplification, the signal is applied to the detector, which recovers the modulation information of the carrier wave. The detector's output signal is then amplified and coupled to the picture tube to reproduce the image.

The Video Signal. – The first step in the television chain of operations is producing the electrical signal that corresponds to the desired picture information. As we've already mentioned, this is done by a camera tube. As illustrated in Fig. 23-14, the picture to be televised is focused by means of the required optical lenses onto the image plate, which is an internal part of the camera tube. Because the image plate is photosensitive, it emits photoelectrons proportionally to the light intensity of the different picture elements, allowing the picture information to be converted into electrical variations. The sync and deflection circuits shown in the block diagram provide for the scanning of the image plate by the electron beam in the camera tube, so that the entire image can be converted into a corresponding electrical signal. Details of how this is accomplished will be discussed presently.

The electrical signal output of the camera tube is the *camera signal* – what we have so far called the video signal. After the required synchronizing and blanking pulses are added, this becomes the *composite video signal,* and includes all the information needed to reproduce the picture.

The composite video signal is the modulating voltage used to vary the amplitude of the carrier wave that transmits the picture information to the receiver. This is done in the conventional manner, amplifying the video signal up to the required power level and coupling the amplified video voltage to the modulated r-f amplifier to modulate the r-f carrier wave. The modulated output is the desired *picture signal,* which is then fed to the antenna so that it can be propagated to the re-receiver. This AM picture signal is transmitted by the broadcast station in its assigned TV channel.

Reproducing the Picture. At the receiver, the modulated picture signal is rectified in the detector to recover the "modulation envelope," which is the composite video signal. After amplification, the video signal is coupled to the control grid of the picture tube, so that the varying grid voltage can vary the intensity of the electron beam striking the screen. Making the kinescope control grid voltage less negative increases both the beam intensity and the amount of light emitted from the fluorescent screen; making the grid more negative decreases the intensity. Since the electron beam is made to scan the screen in a sequential order that follows the scanning pattern, and the timing is synchronized with the transmitter, all the elements of the picture are "painted" on the screen to reproduce the entire image.

The Scanning Pattern. – In order to produce an electrical signal for all the picture elements of the image, the picture must be scanned. In the electronic television system, the scanning is done by a beam of electrons. The beam moves rapidly over the image surface, in such a manner that it covers every picture element, in a definite order. The path traced by the beam is illustrated here:

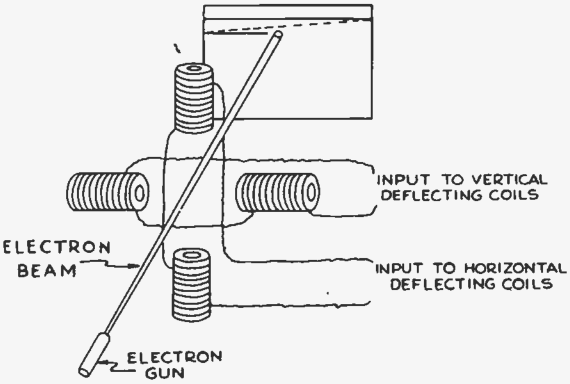

Fig. 23-12

The line at the top is produced by the scanning beam as it moves across from left to right. This is the horizontal trace, during which all the picture elements of one line are scanned in a sequential order. After the end of the trace, at the right side, the beam must be brought quickly back to the left. This return is the horizontal *retrace* or *flyback*. One complete horizontal line includes both the trace and the retrace.

When the next line below is scanned it does not overlap the previous one because the beam is made to move down slowly at the same time that it is scanning horizontally. Since the vertical scanning motion is very slow compared to the horizontal scanning, complete horizontal lines are produced during a very small part of the complete vertical scan. As a result, the two simultaneous scanning motions make the beam scan the image in a succession of horizontal lines that are progressively lower and lower, until the bottom of the picture is reached. At this time, the beam then reverses its vertical motion and travels rapidly to the top, providing the vertical retrace or flyback. After the beam is brought back to the spot from which it started at the top, the entire scanning procedure is repeated continuously. This same scanning pattern is followed at both the transmitter and receiver. The standard scanning pattern will be discussed in greater detail in Sec. 23-8.

Deflection. – The electron beam, which does the scanning in our present electron television system, is made to sweep across the scanned surface in the standard scanning pattern by deflection coils as illustrated in Fig. 23-12. Physically, the coils are in one unit called the *deflection yoke,* which is mounted externally around the neck of the kinescope.

There are two pairs of deflection coils, one pair for the horizontal scanning motion, and one for the vertical motion. Each pair of coils exerts a force on the beam electrons, in accordance with the "motor principle" previously discussed in Lesson 17. You will recall that when current flows in the coils, a magnetic field is set up perpendicular to the beam. This field deflects the beam electrons in a direction perpendicular to both the beam and the field, and by an amount proportional to the instantaneous current in the coils. If the current is made to increase rapidly, the amount by which the electrons are deflected also increases, causing the beam to move or *sweep* across the picture area.

Separate deflection circuits are required for the horizontal and vertical sweep motions. Furthermore, the transmitter and receiver must each have their own deflection circuits. The scanning circuits at the transmitter scan the image so that it can be converted to electrical signal variations corresponding to the visual information in the picture elements; the sweep circuits at the receiver make the electron beam scan the fluorescent screen of the picture tube in the same way as at the transmitter, in order to reassemble the elements in their correct order and reproduce the picture.

Synchronization. – To keep the scanning at the receiver in step with the action at the transmitter, it is necessary to send along with the picture signal special *synchronizing signals*, usually called *sync*. These are rectangular pulses, of very short duration, that are added to the picture signal at the transmitter. There is an individual horizontal synchronizing pulse for each scanning line, and vertical synchronizing pulses are included for every vertical scan. The shape of the synchronizing signals is illustrated here for several horizontal sync pulses:

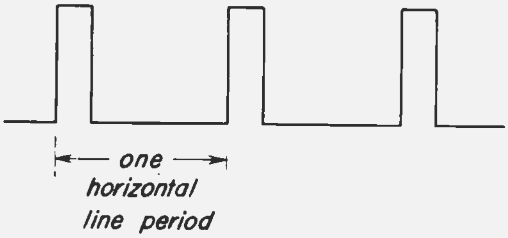

Fig. 23-13

The sync pulses trigger the deflection circuits that produce the scanning signals, holding them at the frequency required to time the vertical and horizontal scanning motions, and keep them in step at the transmitter and receiver. It is important to realize that the deflection circuits include an oscillator stage, which produces the scanning signal needed to produce the scanning lines, whether synchronising signals are present or not. The sync does not produce the scanning – it only times the scanning correctly. Still, synchronization is very important. The picture cannot be reproduced properly, even with scanning, unless the picture information for any instant of time is reproduced in exactly the right place.

Although some time must elapse before the transmitted sync reaches the receiver, this does not affect the synchronization. Since this delay is constant, the individual parts of the image can still be synchronized with respect to each other, to hold the picture together.

Blanking. – In addition to the sync, the radiated picture signal includes blanking signals, which are inserted in order to obliterate the retraces that are part of the scanning pattern. There are horizontal and vertical blanking pulses to blank out the retraces.

No picture information is scanned during the blanking periods. This is the time allowed for completing the flyback necessary to put the beam in the position where it should be for starting the next trace. When the beam has completed a horizontal trace and is at the right side of the picture area, the horizontal blanking signal then extinguishes the beam in preparation for the retrace. The blanking pulse does this by setting the magnitude of the picture signal at the level that corresponds to black. The same action takes place for the vertical scanning, as the vertical blanking pulse extinguishes the scanning beam during the vertical flyback time.

CAMERA TUBES

23-6. We are now ready to discuss in greater detail how practical camera tubes operate. To understand this discussion, you should be pretty clear on such matters as the influence of electric and magnetic fields on moving electrons, as discussed in Lessons 16, 17 and 19. If you are at all hazy about these matters, it might be well to review the pertinent sections of these Lessons.

The Iconoscope. – The iconoscope was one of the first practical electronic scanning devices. It was developed in 1925 by Dr. V. K. Zworykin. Although it has in the past few years been substantially replaced by the image orthicon, the iconoscope is still an important piece of television equipment, and an understanding of its operation will help you in understanding the basic principles of camera signal generation.

The four essential parts of the iconoscope are: (1) a photosensitive surface called the *image plate*, on which the optical image is focused; (2) the electron gun in the narrow neck of the tube, which produces a beam of electrons aimed at the image plate to scan the picture; (3) an evacuated glass envelope in which the above parts are mounted; (4) deflection coils to sweep the beam over the image plate and scan the picture elements in the standard scanning pattern. The deflection coils are mounted externally around the tube. See Fig. 23-14 on the next page.

When a scene is televised using the iconoscope, light from the scene is focused through the glass window of the tube onto the image plate. This plate is a thin sheet of mica, approximately

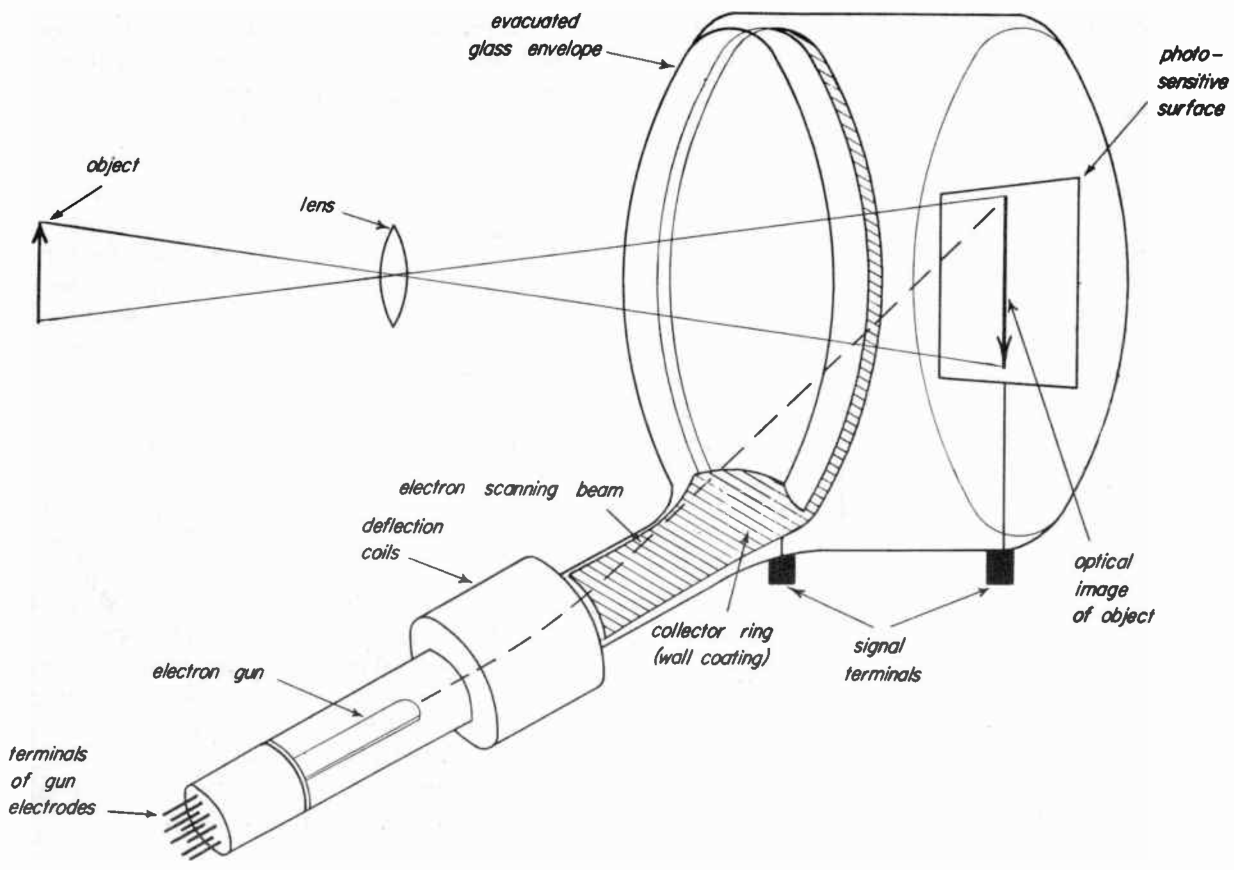

Fig. 23-14

3½ × 4¾ inches, and about 0.001 in. thick. On the side facing the light source the mica is covered with a thin layer of photosensitive cesium globules. This is called the *mosaic*, because of the globular structure, and is the photosensitive surface that can convert the light image into electricity.

The back side of the mica sheet is a flat conducting surface of graphite connected to one of the signal terminals on the tube envelope. The other signal terminal connects to the *collector ring* part of the internal wall coating. This metallized coating is the anode of the electron gun that provides the beam of electrons aimed at the image plate. These are shown in Fig. 23-14 and 23-15.

The cross-sectional view of the image plate in Fig. 23-15 shows its three components: the mosaic surface, mica insulating sheet, and the conducting *signal plate* at the back. With the collector ring close to the image plate, electrons emitted by the mosaic can be collected to provide a path for the signal current produced as the electron beam scans the image.

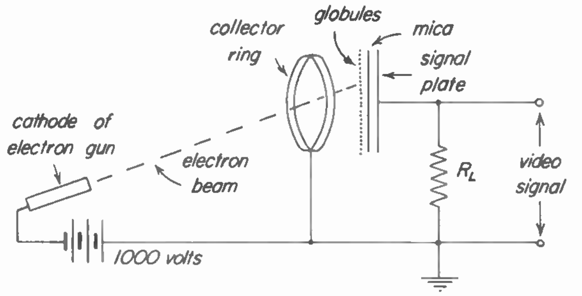

Fig. 23-15

The Charge Image. – Consider what happens when the mosaic is illuminated by the optical image. Since each globule is photoemissive, it emits electrons in proportion to the amount of light falling on it. In effect, each globule represents a photoelectric source that is part of a small condenser, with the mica as the dielectric, a mosaic element as one condenser plate, and the back signal plate as the other side of the condenser. When the mosaic loses electrons they can be picked up by the collector ring, charging each globule to a potential that depends upon the amount of light on the element.

Considering the entire mosaic, each of the globules emits electrons according to the light intensity of different parts of the image. As a result, the image plate provides a distribution of electric charge, called the *charge image,* that corresponds to the optical image. These variations in charge throughout the mosaic can be maintained because the individual globules are separated by the mica insulation.

The effect of the scanning beam striking the mosaic is to allow each small condenser to discharge through the capacitive signal circuit. Since the elements of the mosaic are charged to different potentials, in accordance with the light values of the image, different amounts of signal current are produced from each globule, proportional to the potential of the element. As the electron beam scans the image plate, therefore, the variations in voltage produced across the load resistor, R_L, by the changing current provide the desired video signal output that represents the picture information.

The Storage Principle. – The iconoscope was the first practical camera tube to utilize the storage principle, making more efficient use of the available illumination by allowing the energy of the light on the mosaic to accumulate in the form of electric charge while the beam is scanning the image. Although output is obtained for any one picture element only when it is covered by the electron scanning beam, the incident light is storing charge on the mosaic at all other times. With the globules of the mosaic charging to a progressively higher potential, more output is obtained from any one element when the spot is scanned. This is much more efficient than an instantaneous system, such as the mechanical scanning disc arrangement, where output can be obtained only from the amount of light on a picture element at the instant it is scanned.

The light storage principle is important because it increases the light sensitivity of the camera tube, so that enough output for a good signal-to-noise ratio can be obtained without requiring excessive illumination. The iconoscope is about 10,000 times as efficient as the instantaneous disk scanning system. However, the more recently developed image orthicon camera tube, which also utilizes the principle of light storage, has even greater sensitivity, so that less illumination is needed to produce a satisfactory picture. It is also less troublesome with regard to spurious background shading effects in the picture. With these two advantages, the image orthicon is now the most popular camera tube, being used extensively in studio cameras and for remote program pickups. Before the development of the image orthicon, the iconoscope was widely used in the studio cameras for "live" talent and film programs, but at present the iconoscope is used primarily in the film cameras because the required intense illumination of the image can be easily obtained in the film projector.

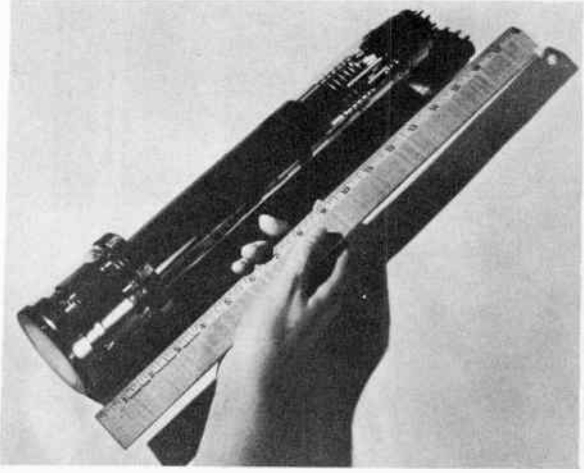

Fig. 23-16

The Image Orthicon. –Since its development, the image orthicon camera tube has been a very important factor in the recent advances made in television broadcasting, as its increased light efficiency makes possible the televising of programs at a relatively low light level. The photo in Fig. 23-16 shows what the tube looks like, while Fig. 23-17 shows a complete image orthicon camera, which includes the camera tube with the amplifiers and control circuits necessary for its operation.

The Image Orthicon's sensitivity is so great that any scene visible to the eye can be televised, producing a satisfactory signal having a negligible noise level. By the end of 1948 the image orthicon camera had completely replaced the iconoscope for remote pickups outside the studio, such as ball games, conventions and other news events, where the lighting cannot be controlled. The image orthicon is also used extensively for studio work because its great sensitivity reduces the illumination requirements.

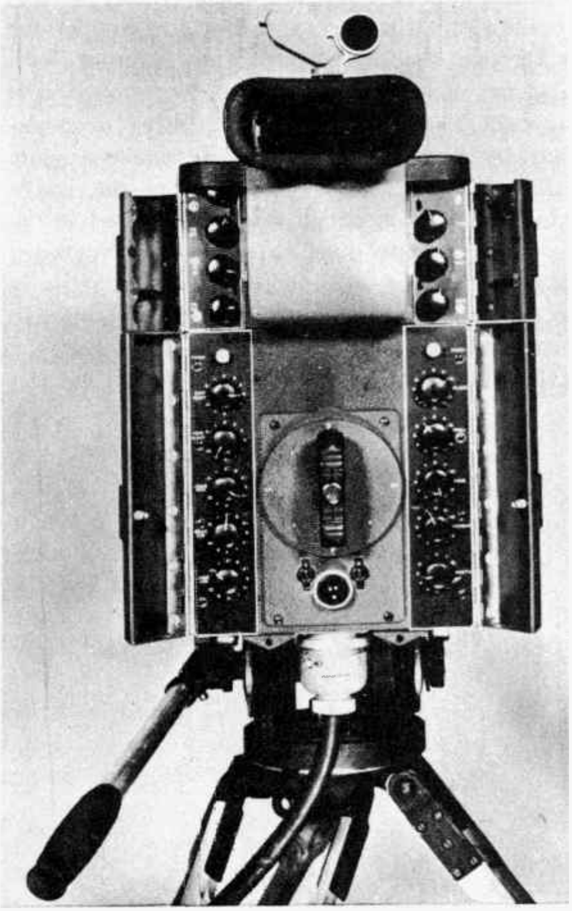

Fig. 23-17

Structure. – As illustrated in Fig. 23-18, the image orthicon consist of three main parts: an image section, the scanning section, and the electron multiplier section, all within the evacuated glass envelope. Although not shown in the drawing, external coils are required for focusing and deflecting of the electron beam.

Light from the scene to be televised is focused on the semi-transparent photocathode surface, which is on the glass window facing the light source. Here the light image is converted to a corresponding electron image as photoelectrons are emitted from the photocathode. These electrons are made to move in substantially straight lines to the *target plate* where a second charge image is produced, corresponding to the picture imformation in the optical image.

The target consists of an exceedingly thin glass plate, next to a very fine mesh screen. More than 60% of the screen area is open, with 500 to 1000 meshes per linear inch, so that the photoelectrons can easily pass through.

The target, which is the image plate, is scanned by the electron scanning beam produced in the electron gun section. In the operation of this tube, however, the electrons in the scanning beam arrive at the target with very low velocity, and are then reflected back toward the cathode, where they can enter the electron multiplier section. The beam of electrons returning from the image plate varies in density according to the variations of potential on the target. The return beam then enters the electron multiplier section of the tube, which has the function of amplifying the beam current variations. As the amplified beam current flows through the load resistor connected to the multiplier section, the desired camera signal output is obtained.

The Image Section. – The photocathode on the inside of the tube's face-plate is made of such thin metal that light passes through it readily, producing emission of photoelectrons from the *back* surface. Light from the scene being televised strikes the photocathode and electrons are emitted

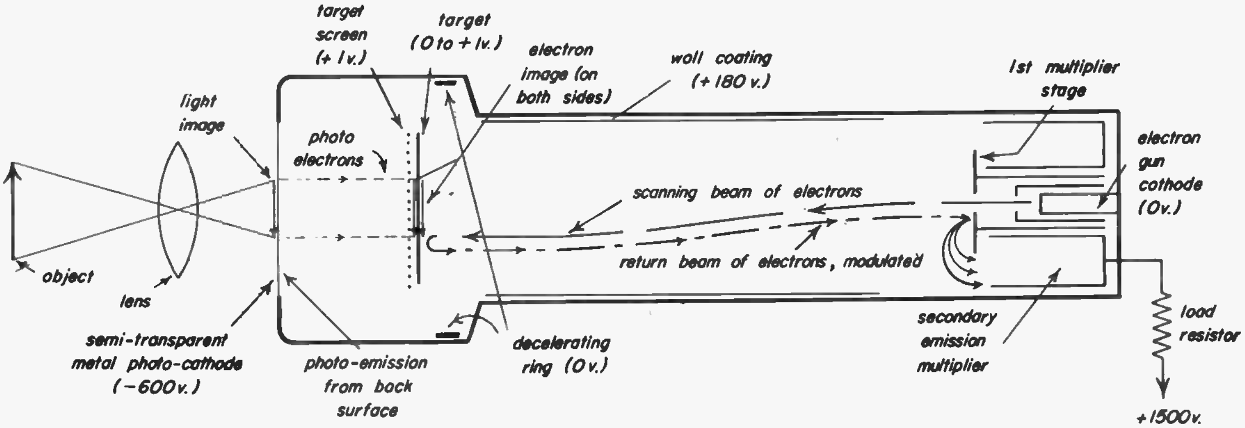

Fig. 23-18

from each illuminated area in proportion to the light intensity at each point. As a result, an electron image is produced in the space next to the cathode, corresponding to the shades of light intensity in the optical image. The photoelectrons are then made to move to the target plate, under the influence of a strong electric field. This field is established by keeping the target at a potential 600 volts more positive than the photocathode. The tendency of the electron image to break up because of the repelling force between electrons is cancelled by the action of an external focus coil. Consequently, the electrons forming the charge image arrive at the target plate in focus and with a comparatively high velocity.

At the target plate, the incident photoelectrons have enough velocity to cause the emission of secondary electrons from the target plate. Each photoelectron striking the target can produce several secondary electrons, leaving a point on the target at a positive potential. (Note that there is a net *loss* of electrons by the plate, which constitutes a positive charge.) Furthermore, the number of primary electrons striking the target determines the amount of positive charge, because this is proportional to the number of secondary electrons emitted. The secondary electrons are collected by the adjacent mesh screen, which is maintained at a potential about 1 volt above the average target potential. The emission of the secondary electrons leaves on the glass target a pattern of positive charges, therefore, providing a charge image that corresponds to the picture information in the light image. The most positive points on the target correspond to the most brightly lighted portions of the picture.

The action of building up a charge image on the target plate by means of secondary emission has the effect of amplifying the electron image formed on the photocathode. Since the number of secondary electrons is greater than the number of primary electrons striking the target, the potential produced by secondary emission at any one point is greater than that of a corresponding point in the electron image on the photocathode. In addition to this advantage, the secondary emission effect at the target makes it possible to utilize the light storage principle, as the charge image builds up continuously as long as the secondary electrons are emitted.

The charge image is present on *both* the front and back surface of the target. This is possible because the glass plate is so thin that it presents very little resistance to the passage of electrons through it, in the front-to-back direction. This is true, even though glass is such a poor conductor that we usually think of it as an insulator. You remember that the resistance of a conductor is proportional to its length, and inversely proportional to its cross-sectional area. Looking at the target plate from the front or back, it has a very large cross-section. The length of the path for the electrons to move from the back to the front, which is equal to the thickness of the plate, is exceedingly small. As a result, the distribution of charges produced on the image side of the glass target plate is essentially the same on the side facing the scanning section.

This charge image can be maintained without neutralizing the various potentials representing the image, because the glass target is a poor conductor in the transverse direction. From a side view, the glass plate is long and exceedingly thin, which presents a relatively high resistance path for electrons in the lateral direction. Therefore, the scanning side of the glass target plate has the desired charge image corresponding to the picture information on the optical image, so that the target can be scanned to produce the camera signal output.

The Scanning Section. – This contains an electron gun, with a heated cathode, control grid and accelerating grid, to produce a beam of electrons aimed at the image plate. The metallized coating on the inside wall of the glass tube is held at a positive potential of several hundred volts, attracting the electrons toward the target. Beam focus at the target is accomplished by the magnetic field of an external focusing coil, while two external deflection coils produce the required motion of the scanning beam. It should be noted that although the coating sets up a strong accelerating field between the coating and the cathode, the field (but not the potential) *inside* the cylindrical coating is nearly zero. Hence the beam electrons travel through this region at nearly constant velocity.

The *decelerating ring* is maintained at approximately zero potential. Its purpose is to set up a *retarding field* that slows down the beam electrons moving toward the target. To understand the changes in the velocity of the beam electrons at various points in their path, it is necessary to recall that the velocity of any electron at any one point in an electric field depends only on the potential difference between that point and the source – the point where the electron velocity was zero. In practical tubes, this means the potential above the cathode, from which electrons may be assumed to be emitted with zero velocity. Thus, inside the metallized coating, the potential varies very little. At all points in this region it is high, but not quite as high as the coating itself, with respect to the cathode. Hence the electrons move through it at a constant high velocity. As they pass through the decelerating ring, they cross points whose potentials are low, but not quite zero. Therefore they are slowed down greatly.

Now consider the target itself. The parts of the target corresponding to the unlighted (dark) parts of the picture, are at zero potential with respect to the cathode. Therefore beam electrons arriving at these points are slowed down to a full halt. If a few electrons actually reach the target, they charge that point negatively, and cause following beam electrons to stop just short of the screen. Now what happens? Remember that the metallized coating, held at several hundred volts positive, accelerated the electrons emitted from the cathode, pulling them through the cylindrical coating. The field set up by the coating extends to the target, too. For electrons emerging from the region inside the coating, this field acts as a decelerating field. But to electrons at rest near the target, it is an accelerating field, propelling them in the opposite direction.

Thus we have formed a *return beam* of electrons, moving from the "dark" parts of the target, back through the region surrounded by the metallized coating, toward the cathode — or to be more precise, toward the anode of the electron gun. This electrode is also at a high potential, so it sets up a strong field that pulls the return beam electrons to it at high velocity.

Now consider the parts of the target corresponding to the *brightly lighted* portions of the picture. These parts are at a *positive potential* of a fraction of a volt or so. When the scanning beam is covering one of these points, therefore, enough of the beam electrons reach the target to neutralize its positive charge at that point. The return beam from this point will therefore contain *fewer* electrons than the return beam from a "dark" point on the target. Thus, as the scanning beam sweeps across all parts of the target, the return beam is modulated by the charge image. *The number of electrons in the return beam varies with time, the variations corresponding to the charge variations along consecutive lines of the charge image, which correspond to light variations along consecutive lines of the optical image.* The required *camera signal* is thus obtained. The return beam, varying in intensity, is a varying current. Its electrons strike the anode of the electron gun with sufficient force to cause secondary emission. This anode is thus used as the first of several stages of the electron multiplier, whose function is to amplify the beam current variations which constitute the camera signal.

The Electron Multiplier Section. — The operation of this part of the image orthicon can be better understood by reference to the enlarged drawing in Fig. 23-19, which shows the details of the secondary emission multiplier section surrounding the electron gun. Each vertical group of diagonal lines in the figure represents a metal disk with cutouts, like a pinwheel. This is called a *dynode*, combining the functions of cathode and anode, as secondary electrons are emitted when the disc is bombarded by primary electrons, and electrons are collected from a previous dynode. Electrons are attracted to the dynodes because each one is at a d-c potential about 300 volts more positive than the preceding dynode, with the last multiplier section connected to + 1500 volts through the output load resistor.

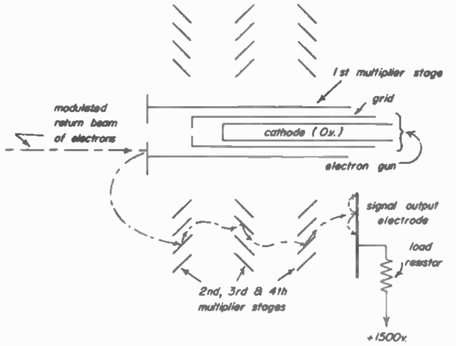

Fig. 23-19

The path of electrons through the multiplier section begins at the first multiplier stage, which is a disc in the electron gun section. Suppose that one electron in the return beam strikes this first dynode with enough velocity to produce five secondary electrons. These are attracted to the second dynode, where each electron can cause the emission of five more electrons. The total of 25 electrons will then move to the next dynode, and so on. As a result, the number of electrons is multiplied by the ratio of secondary electrons to primary electrons at each dynode. In our example, one electron in the return scanning beam would produce 5 × 5 × 5 × 5 or 625 electrons, leaving the fourth multiplier stage. The electrons from the previous stages are collected from the last dynode by a mesh screen anode, providing the current that flows through the load resistor to produce the desired camera signal output. This signal is an amplified duplicate of the variations in intensity of the modulated return beam entering the multiplier section.

In practice, the amount of gain obtained with a typical five-stage multiplier is about 500. Since this gain does not involve current flow through any resistors in the multiplier sections, the amplification of the electron current is achieved with a very low noise level.

Disadvantages. – Although the image orthicon has the most important feature of being able to provide a picture with good detail at very low light levels, and over a wide range of illumination, it has two minor disadvantages: (1) the maximum possible detail of the picture is slightly less than with the iconoscope, and (2) the image orthicon is not so well suited for operation at very high light levels. In order to provide the desired characteristics, two types of image orthicon camera tubes are manufactured, one designed for use as a general outdoor pickup, and the other for studio cameras.

Like other photoelectric devices employing cesium, the image orthicon may show fluctuations in performance from time to time. Operation of the tube at too low a temperature may cause the appearance of a rapidly disappearing "sticking picture", of opposite polarity from the original, when the picture is moved. A loss of detail in the picture may be produced by operation of the tube at too high a temperature. The camera tube circuits must be accurately adjusted to minimize the beat pattern caused by interaction between the scanning lines and the lines of the target's mesh screen, producing a moire or swirl pattern in large, bright areas of the picture. A "dynode spot", which is a white spot appearing chiefly in the dark areas of the picture, may be caused by a slight blemish on a dynode surface.

CONVERTING THE VIDEO SIGNAL INTO A PICTURE

23-7. The video signal in the receiver is coupled to the *kinescope grid* so that the desired picture can be reproduced. The picture tube is able to convert the video signal into the desired image because it includes: (1) a fluorescent screen; (2) an electron gun to produce a beam of electrons whose intensity can be varied to change the amount of light emitted by the fluorescent screen; (3) an external focus coil, to focus the electron beam on the screen, and (4) external deflection coils to deflect the beam in the scanning pattern required to cover the entire picture.

The Electron Gun. – The cross-sectional view below illustrates the electron gun of a kinescope:

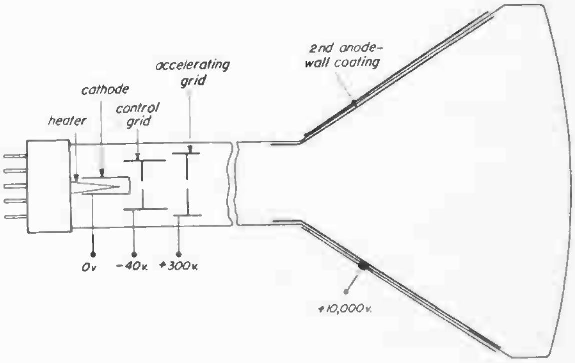

Fig. 23-20

Electrons are released from the cathode when it is heated, and the emitted electrons are accelerated away from the cathode toward the screen by the high positive potential of the anode. On the way, the electrons must pass through a small hole or *aperture* in the *grid*. As a result, the electrons are formed into a *beam* as they are propelled toward the screen and go through the apertures in the cylindrical control grid and accelerating electrodes. The beam tends to spread out because of the repulsion among the electrons, but this effect can be corrected by the magnetic field of an external focus coil to make the beam focus as a fine point on the screen.

In addition to its action of forming the electrons into a beam, the control grid voltage influences the number of electrons that can pass through the aperture. As a result, changing the control grid voltage varies the intensity of the electron beam. The control grid is biased negatively with respect to the cathode voltage, but when its potential is made less negative, the beam current is increased, increasing the intensity of light emitted by fluorescent screen. Making the control grid voltage more negative decreases the beam intensity and the screen illumination. When the control grid voltage is sufficiently negative it can cut off the screen illumination completely, which corresponds to black in the picture reproduction. The negative grid potential required for visual cutoff is about 50 volts for typical picture tubes, with an anode potential of about 10,000 volts.

Magnetic Deflection. – A brief explanation of the principle of magnetic beam deflection was given in Lesson 17. The principle of how the electron scanning beam is deflected by the magnetic field of the deflection coils is illustrated here:

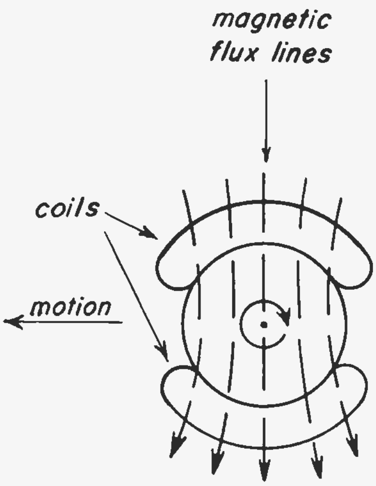

Fig. 23-21

The drawing must be visualized in three dimensions to see how the beam moves. At the center is a dot indicating the electron beam itself, the electrons moving out of the paper toward you. The moving electrons constitute a *current* and like all currents, the beam sets up a magnetic field in the space around it. The flux lines of this field are concentric circles around the beam, whose direction is shown by the arrowhead. The magnetic field of the two horizontal deflection coils, which are connected in series with both fields aiding in the same direction, is assumed to be *downward* for the direction of current through the coils.

The important point to remember now is the rule for the motor action on a conductor carrying current in a magnetic field. When the magnetic field of the current in the conductor reacts with the external magnetic field of the deflection coils, the reaction of the two fields produces a force tending to move the conductor in the direction of the weaker field. Looking at Fig. 23-21, the direction of the fields is aiding at the right of the beam, but opposing toward the left, producing a weaker field at the left. In the absence of a solid conductor, this force is exerted on the electrons themselves, individually and as a group. The electron beam, therefore, is deflected toward the left. At any instant, the amount by which the beam is deflected is approximately proportional to the strength of the magnetic field of the deflection coils.

As the a-c scanning current produces a magnetic field that varies in magnitude and direction, the magnitude of the force on each electron also varies with time. Thus, the beam is caused to scan horizontally. Simultaneously, the vertical deflection coils provide the required vertical scanning motion. The vertical coils are not represented in Fig. 23-21. They are almost identical with the horizontal coils. They are placed, one on each side of the beam, to produce a magnetic field whose flux lines are horizontal – at right angles to the direction of their force on the beam electrons. The four deflection coils – two horizontal and two vertical – are contained in the single unit called the *deflection yoke*. The yoke is mounted around the kinescope neck as shown in Fig. 23-22. The currents in its vertical and horizontal deflection coils are made to vary in such a way that their combined effect is to cause the beam to sweep across the picture area, one horizontal line after another, covering every part of the picture area in the sequence required by the standard scanning pattern.

Magnetic Focusing. – In order to make the electron beam produce a fine point on the scanned surface, allowing the reproduction of small picture details, the beam must be focused to counteract the repelling force that the individual electrons exert on each other, thus tending to make the beam spread out.

The basic principle of magnetic focusing is the same as for magnetic deflection – a magnetic field exerts on an electron moving through it, a force that is perpendicular both to the field and to the direction of motion of the electron. Magnetic focusing, however, is a little harder to visualize, because we must consider separately two components of the electron velocity – one component parallel to the magnetic field, and one at right angles to it.

The focus coil is placed as though it were wound around the neck of the tube. Its *magnetic flux lines*, therefore, are *parallel to the axis of the tube and to the electron beam*, as shown in Fig. 23-23. This focusing field may be produced

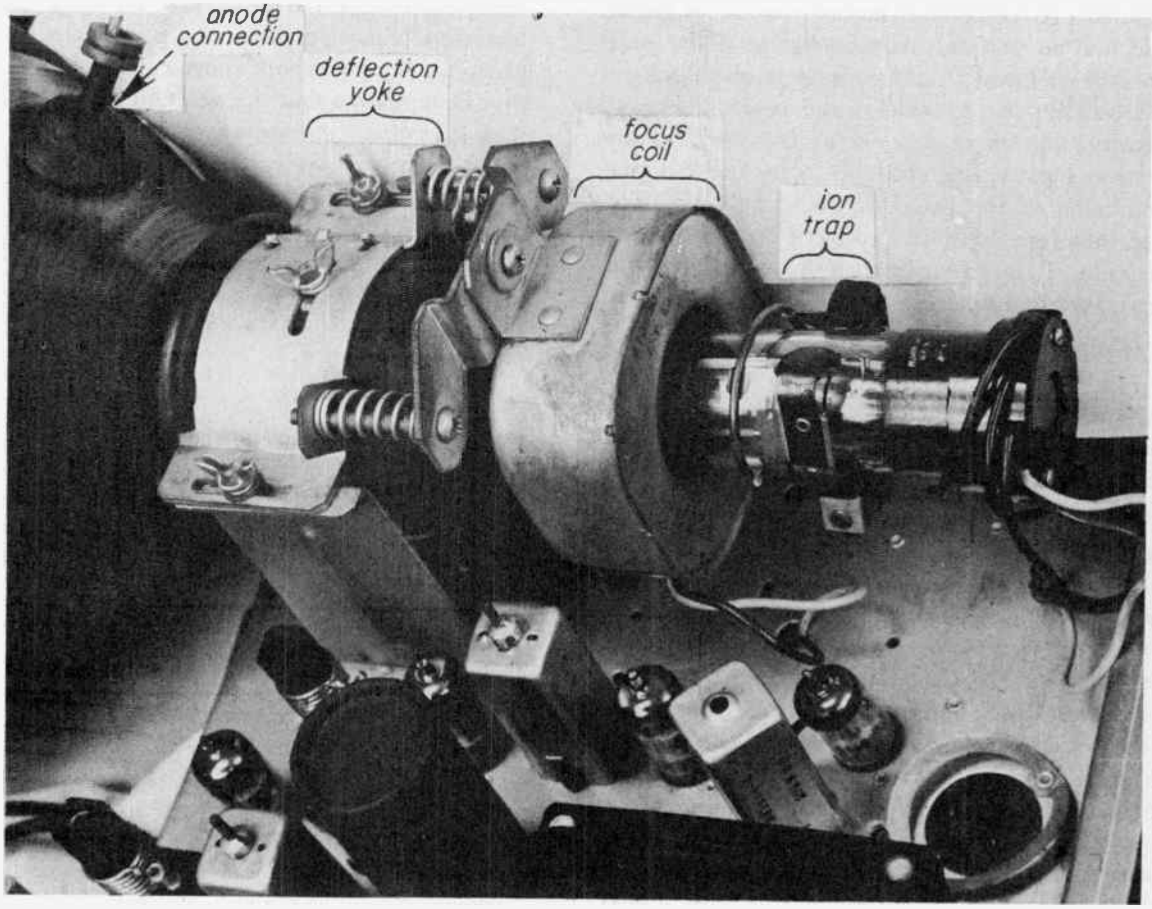

Fig. 23-22

by a ring-shaped permanent magnet, or by a coil carrying direct current, or by a combination of both. The important thing to visualize is a field whose flux lines are parallel to the beam, not perpendicular to it as in the case of the deflecting field.

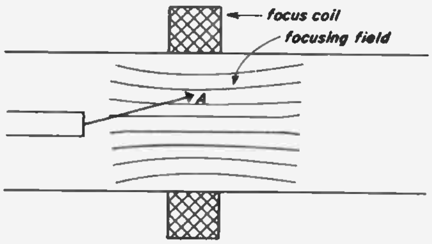

Fig. 23-23

Suppose that an electron in the beam is moving along the center line of the tube, parallel to the lines of force of the focusing field. Since the electron path is then exactly parallel to the focusing field, the focusing field would exert *no force on the electron,* which could continue to move along the beam axis.

Now consider an electron that is moving at an angle to the beam axis, upward, as at point *A* in Fig. 23-23. We can think of it as moving in two directions at once — parallel to the beam axis, and at right angles to the beam. Let's call this velocity at right angles to the beam the *cross velocity.* The parallel component of its motion is unaffected by the magnetic focusing field, since the magnetic flux lines are also parallel to the beam axis. But the cross velocity — the component of motion *away from the beam* — is at right angles to the magnetic field, which therefore *exerts a force on the electron proportional to this cross velocity.* If the electron is tending to leave the beam axis by a very small angle, the force exerted by the magnetic field is small; if the angle of deviation is large, so is the magnetic force.

Now the *direction* of the magnetic force must, we know, be perpendicular both to the magnetic field and to vertical cross velocity. This force gives the electron a third component of velocity – horizontally, to one side of the beam. Its cross velocity path is thus a curve. But even as the electron curves, its cross velocity is still perpendicular to the magnetic focusing field. The field therefore continues to force the electron to one side of its direction at any instant, causing it to travel in a complete circle.

At the same time that the electron is travelling its circular cross velocity path, it is also travelling parallel to the beam axis. The resultant of these two motions is a path that is a *helix,* like one turn of a stretched-out coil spring.

Now an electron that deviated by only a small angle from the beam axis at point *A* will travel toward the screen in a helical path of small diameter. And an electron deviating by a wide angle at point *A* will describe a helix of larger diameter. But *both will take exactly the same length of time to complete one full turn of the helix.* Therefore, if they are both moving toward the screen with the same parallel component of velocity (which they are, since they are both accelerated by the same electric field), then they will arrive at the same point when each completes one turn of its helical path. This is true, no matter how widely their paths may diverge in between.

The point at which all possible helical paths converge can be made to fall on the screen, by proper adjustment of the field strength and location of the focusing coil or magnet. The electron beam will then *focus* at a sharp point on the screen. When this result is obtained, a side and end view of several possible electron paths through the tube would look, greatly exaggerated, something like this:

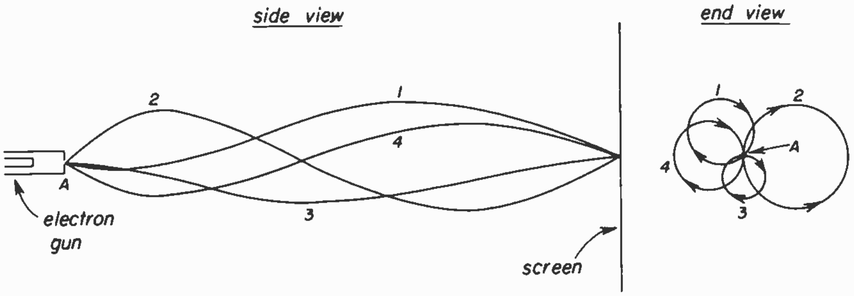

Fig. 23-24

The Fluorescent Screen. – The *screen* of the picture tube is a thin layer of a mixture of several phosphors. The mixture is applied as a coating on the inside surface of the flat glass face of the tube, to provide the desired fluorescent characteristics. Zinc sulphide and zinc-cadmium sulphide are the phosphors commonly used. The main requirements are that the screen emit white light, with a medium persistence. This means that light is radiated from the screen for a small fraction of a second after bombardment by the electron beam. Incidentally the last two symbols in the type designation of a picture tube, such as *P4* in 16GP4, indicate that the screen utilizes the P4 phosphor, which produces white light and has medium persistance.

Brightness. – This is the *average overall light intensity* given off by the reproduced picture. When the accelerating anode voltage has the correct value, and the tube is in normal operating condition, the brightness of the picture should be high enough to permit viewing in a room with average lighting. The actual control of the brightness of the picture is determined by the d-c bias voltage on the kinescope control grid, which is adjustable as a front panel control on the receiver to permit changing the brightness according to the room illumination and the viewer's preference.

Contrast. – The *relative light intensity of the extreme black and extreme white parts* of the picture determines the *contrast.* This depends upon the magnitude of the a-c video signal coupled to the kinescope control grid. If the signal is not sufficient to swing the kinescope grid voltage far enough toward zero, away from the negative bias voltage, the amount of beam current required for very white parts of the picture will not be produced. Or the darkest parts of the picture may not be black if the control grid voltage is not driven to cutoff. As a result, with insufficient video signal the range of light values between black and white is reduced in the image. producing a picture with a flat washed-out appearance.

When the video signal has the amplitude needed to vary the kinescope grid voltage over the full range of values corresponding to black and white, the reproduced picture has its normal contrast. Generally, an amplitude of about 50 volts peak-to-peak is necessary. The contrast control is the *picture control* on the front panel of the receiver. It varies the amount of a-c video signal coupled to the kinescope grid, in order to provide the required amplitude of video signal and set the contrast of the reproduced picture.

THE SCANNING RASTER

23-8. The raster is the rectangular frame area that includes all the scanning lines. Here is a photo of the screen of a picture tube, with the brightness turned up higher than normal to show the raster:

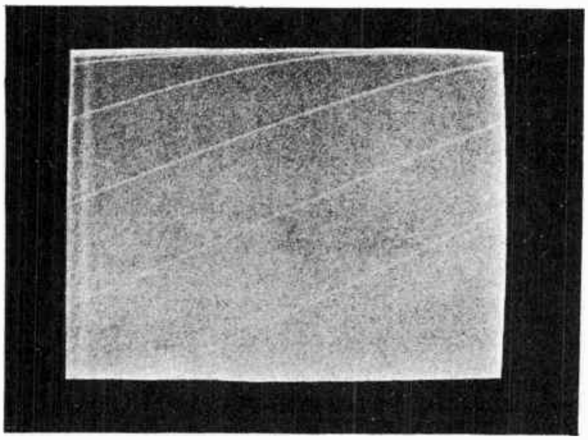

Fig. 23-25

The luminous area is produced by the electron beam as it scans the fluorescent screen of the tube in the standard scanning pattern. The screen brightness is uniform here because there is no video signal. When video signal is coupled to the kinescope grid, however, as the beam scans the frame, the picture can be "painted" on the raster with the different shades of light produced by varying the beam intensity, in accordance with the picture information.

Standards. – Many of the transmitter practices in commercial television broadcasting, especially with regard to the scanning procedure, must be standardized so that any receiver can reproduce the picture transmitted by any television broadcast station. These rules are enforced by the Federal Communications Commission (FCC), which adopted a group of standards originally determined by the Radio and Television Manufacturer's Association (RTMA, formerly RMA). For this reason they are often called the *RTMA standards*. Many leading manufacturers of radio and television equipment, have played an important part in setting up the RTMA standards that have enabled television to develop from its early days of experimentation to the present expanded commercial field. The scanning procedures explained here are part of the RTMA standards.

Number of Scanning Lines. – The total number of scanning lines in the raster is 525. This means that the scanning beam produces 525 complete horizontal lines, to scan the entire picture frame area before returning to its starting position to begin scanning the next frame.

The reason for choosing 525 as the total number of scanning lines in the frame is related to several factors. The number should be about 525 to provide the best detail possible within the limits of the 6 mc broadcast channels provided for transmission of the picture signal. In addition, the number 525 is the product of the odd prime number, 3 × 5 × 5 × 7, which is convenient for the frequency division circuits in the sync signal generator at the broadcast station. And finally, the total of all the scanning lines in one picture frame must be an odd number for the standard scanning pattern used.

Odd Line Interlacing. – The way that the scanning pattern is produced is illustrated in Fig. 23-26, showing the path followed by the scanning beam. From the top left corner, at point A in Fig. 23-26 (a), the scanning spot moves across the raster to produce a succession of horizontal lines that are progressively lower and lower. The vertical motion of the beam is produced by the vertical deflection signal, which is applied simultaneously with the horizontal sweep. The horizontal lines have a slight downward slope because the effect of the vertical deflection is always present, moving the beam continuously until the vertical trace has been completed to the bottom of the raster at point B.

When the downward vertical scan has been completed, to point B, the vertical deflection signal then makes the beam retrace to the top of the frame to begin the scanning process again. The flyback to the top of the frame is much faster

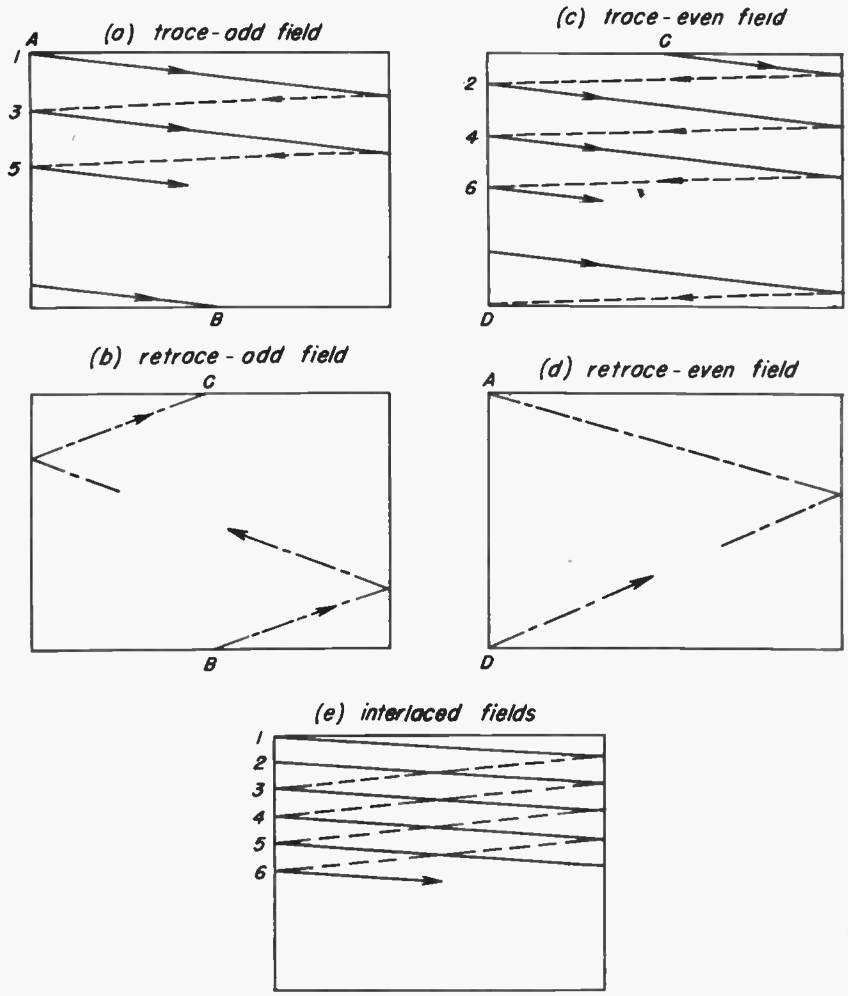

Fig. 23.26

than the downward movement of the vertical deflection, but still is relatively long in terms of the horizontal scanning period, so that a number of complete horizontal lines are scanned during the vertical retrace, as illustrated in Fig. 23-26(b). For simplicity, only one of the retrace lines is shown. These horizontal lines produced during the vertical retrace are normally not visible and they do not carry any picture information. Notice that they slope upward, since this is the direction of vertical motion for the beam during the vertical flyback. These are the retrace lines that become visible when the brightness is set considerably higher than normal, as can be seen in Fig. 23-25.

The scanning lines in Fig. 23-26 (a) are labelled alternately with odd numbers because the beam skips lines that will be filled in later during the next vertical scan, to *interlace* the lines in the frame. To make the beam skip alternate lines, it is only necessary to cause the beam to move downward twice as fast as it would if all 525 lines were scanned during the period of a single vertical trace.

When the scanning beam is back at the top of the frame, after scanning all the odd lines and completing its flyback, it is at point C in Fig. 23-26 (c), ready to start the next vertical scan. The vertical trace will now make the path of the beam fall between the previous lines scanned, to fill in the even lines and complete one frame. This interlacing of the alternate lines is accomplished automatically, because there is an even number of vertical scans (2) for an odd number of total lines (525).

With the beam down at the bottom of the raster at point D, after the second vertical trace, the vertical deflecting signal then makes the beam retrace to the top. The same number of retrace lines will be produced as in the previous field, to bring the scanning beam back to where it started in the first field at point A, as shown in Fig. 23-26 (d). The entire procedure is then repeated continuously, as all the odd lines and all the even lines are scanned in alternate succession.

Fig. 23-26 (e) illustrated the interlaced raster, The complete frame consists of two separate groups of lines, each group being called a *field*. The odd fields contain the odd-numbered scanning lines; the even fields include the even-numbered scanning lines. Each field has 262½ scanning lines, both fields providing a complete frame with the total 525 lines scanned during the frame interval of 1/30 second. The time required to complete any one field is 1/60 (one-half of 1/30) second.

Flicker. – The scanning lines are interlaced, instead of following a simple progressive pattern with all 525 lines scanned in one vertical scanning cycle, because the interlacing doubles the repetition rate of the vertical flybacks and the vertical blanking intervals. This eliminates the effect of flicker in the reproduced picture. The flicker is a blinking of light on the viewing screen as it becomes white with picture information during one field, and then is dark due to vertical blanking during the vertical flyback. Although there are still only 30 complete pictures per second, with interlaced fields the "blinking" rate is 60 per second, because 60 "blankouts" occur each second, which is rapid enough to make the flicker unnoticeable.

The flicker could be eliminated by scanning the 525 lines progressively at a rate of 60 frames per second, but this would double the horizontal scanning speed, increasing the video frequencies required to show details in the picture. Interlacing has the advantage of doubling the vertical blanking rate to eliminate flicker, without increasing the horizontal scanning rate. The picture information is essentially the same, since the order in which the lines are scanned is not apparent to the eye, which sees the picture as a complete unit, due to the persistence of vision.

Frame, Field and Line Frequencies. – The frame frequency, which is the picture repetition rate, is standardized at 30 cps. This is the rate at which the total group of 525 scanning lines is repeated. The field frequency is the rate at which the fields are repeated, which is 60 cps, since there are two fields for one frame interval. Notice that the field repetition rate, and the vertical scanning frequency, are the same as the 60 cps power line frequency generally used in the United States.

The horizontal lines scanning frequency is 15,750 cps. This is calculated as follows. There are 525 lines produced during the frame time of 1/30th of a second, or 525 × 30 = 15,750 lines produced in one second, which is a frequency of 15,750 cps. In terms of the field scanning interval, 262½ lines produced during the field time of 1/60th of second is equal to the same line frequency of 15,750 cps. The time required to scan one horizontal line, therefore, is 1/15,750 second, or 63.5 microseconds.

The scanning rates determine the frequencies of the deflection signals that sweep the beam to produce the raster. The frequency of the horizontal deflection signal produced by the horizontal sweep generator is 15,750 cps, since there must be one cycle of deflection signal for each line. The vertical deflection signal from the vertical sweep generator has the field frequency of 60 cps because this is the rate at which the beam completes the vertical scanning cycles.

Deflection Waveforms. – In order to produce linear scanning, the variations of the deflecting force with respect to time must have a sawtooth waveshape, as shown in Fig. 23-27. When electrostatic deflection is used, by means of deflection voltage applied to two pairs of deflection plates within the tube, the scanning signal must be a sawtooth wave of *voltage*. Electrostatic scanning is very seldom used in picture tubes, however, because of the extremely high voltages that would be required to fully deflect modern high voltage kinescopes. With magnetic scanning, the *current* through the deflection coils must have the sawtooth waveshape, because it is the magnetic field of the current that produces the deflecting force, reacting with the magnetic field of the electron beam.

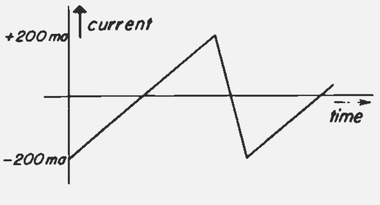

Fig. 23-27

The Sawtooth Waveform. – Fig. 23-27 illustrates how the sawtooth wave produces linear deflection. With a peak-to-peak amplitude of 400 ma. as a typical value for the sawtooth current required in the horizontal deflection coils, assume that this deflects the beam across the kinescope screen for a full horizontal sweep of 8 inches. This provides 2 inches of deflection for every 100 ma, change in the amount of scanning current. The 8 inches of deflection includes 4 inches either side of center, corresponding to the a-c scanning current of ± 200 ma. Starting with zero current, at the middle of the a-c axis, the beam is at the center of the screen, which is its normal position without deflection. When the current changes, the beam moves away from center in the horizontal direction. This may be left or right, depending on the direction of current through the deflection coils, but we'll assume that the motion is toward the right for an increase of current in the positive direction.

Because the rise of the sawtooth wave is linear, increasing by equal amounts in equal intervals of time, the beam moves across the screen at uniform velocity for the trace period of the scan. When the sawtooth current increases from zero to 100 ma, the beam is deflected 2 in. away from center, to the right. During the next equal interval of time, while the scanning current rises from 100 ma to 200 ma, the beam is deflected an additional 2 in., moving to its extreme position at the right, 4 in. from center. At this time the value of the sawtooth current changes rapidly from + 200 ma. to - 200 ma for the flyback. Since this is a change of 400 ma, in the direction opposite from the linear rise during trace time, the beam is deflected 8 in. to the left, completing the retrace within a very short period of time. Now, with the beam at the left side of the raster, the scanning current change of + 100 ma, from - 200 ma to - 100 ma, moves the beam 2 in. toward center. Then the next 100 ma change produces an additional displacement of 2 in. deflecting the beam to the center. From here the entire scanning cycle is repeated again. With the a-c deflecting signal continuously sweeping the beam horizontally, the scanning raster is produced as the sawtooth vertical scanning signal sweeps the beam vertically while the horizontal lines are scanned.

Both the retrace motions are very rapid. Typical values are about 10% of the total line scanning interval for the horizontal flyback time, and less than 5% retrace time for the vertical scanning. The flyback on the sawtooth wave need not be linear because no picture information is shown during this time, due to the blanking signals.

The Trapezoidal Waveshape. – It is important to remember that in order to produce the necessary sawtooth *current*, the *voltage* across the deflection coils is not a sawtooth wave, because magnetic deflection circuits include inductance and resistance. To produce sawtooth scanning *current* the deflection *voltage* must have the waveshape shown here:

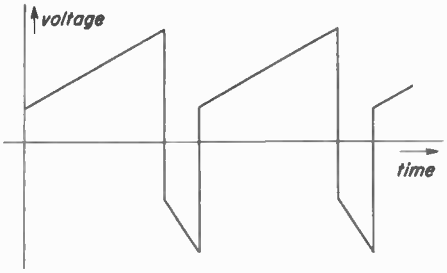

Fig. 23-28

Called a trapezoidal waveshape, this combines sawtooth and rectangular voltage waves to produce the voltage required for sawtooth current in a circuit including inductance and resistance. The sawtooth voltage produces sawtooth current in the resistive component of the deflection circuit, while the rectangular voltage component is needed to furnish sawtooth current through the inductance. With the proper voltage, the scanning current has the required sawtooth waveshape, providing linear scanning in the raster.

Scanning Non-Linearity. – When the deflection current does not increase linearly during the trace, the scanning beam is deflected at a non-uniform rate. As an example consider the non-linear sawtooth current wave shown here as the vertical deflecting signal.

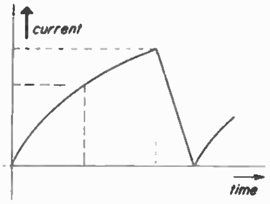

Fig. 23-29

If we divide the trace time into two equal halves on the horizontal time axis, as indicated by the dotted lines in the drawing, you can see that the corresponding amplitudes are not the same. During the first half of the vertical trace time, therefore, the scanning beam will be deflected more than half way down. The effect of this increased rate of deflection is to spread out the top half of the picture information in about three-fourths of the raster. Then the remaining half of the picture is compressed in the bottom part of the frame. This is the way the effect appears in the reproduced picture:

Fig. 23-30

Of course the non-linearity could be in the opposite sense, crowding the top and spreading out the bottom. Also, the picture can be non-linear in the horizontal direction, crowding the picture information at the right or left, when the horizontal scanning signal is not linear.

The Effect of Blanking on the Picture. – Although the blanking signals are required to blank out the retraces in the scanning pattern, their pulse width, in time, is generally longer than the retrace time. As a result, the scanning beam is also blanked for a small part of trace time, in addition to blanking of the retraces. Figure 23-31, illustrates the time relation between sync and blanking for one horizontal line, which accounts for this overlap.

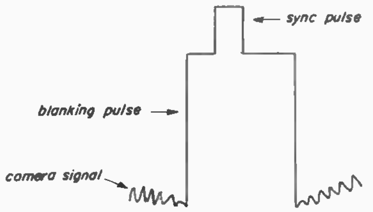

Fig. 23-31

Starting at the leading edge of the wide pulse, this is the beginning of blanking. The beam is at the right side of the raster, completing the trace for one line, when the blanking pulse of the composite video voltage on the kinescope grid cuts off the beam and extinguishes the screen illumination. Then the beam deflection continues a little toward the right, completing the trace, until the time of the leading edge of the sync pulse, because this is when the flyback starts. The blanking continues during retrace time. When the flyback is completed, with the beam at the left side of the raster, the beam then traces another line. However, the deflection circuits produce a rapid flyback that should be completed before the end of the blanking pulse. As a result, a small part of the trace at the left side of the raster is blanked out. With this effect produced for every line, the overall effect is a blanking bar along the left and right sides of the raster. This effect is illustrated here, in a raster with the brightness increased to show the blanking.

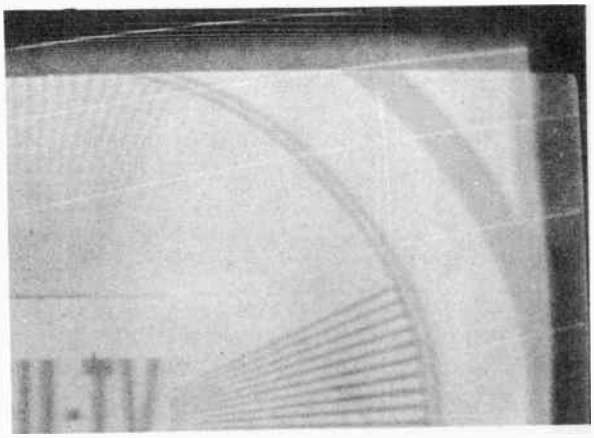

Fig. 23-32

The blanking bars along the top and bottom of the raster are due to vertical blanking, which has a similar relation to the vertical scanning.

The only effect of the blanked portions of the raster is to decrease slightly the size of the visible frame. There is no omission of picture information because the blanking signals, which are received from the transmitter, are producing a similar effect for the scanning in the camera tube at the broadcast station.

Aspect Ratio. – The proportions of the scanning raster and the picture frame are standardized to provide a rectangular frame having a width 4/3 its height. This proportion is called the *aspect ratio* of the frame. Although it defines the *proportions* of the frame, which must be standardized so that a receiver can reproduce the picture from any station without exaggerating the height or width, the aspect ratio does *not* limit the absolute size of the picture. For any size, the visible picture frame can and should have the 4/3 aspect ratio. This should be determined with video signal on the kinescope grid because the blanking signals crop off the edges of the raster.

◆

NOTES

NOTES

NOTES

NOTES

TELEVISION SERVICING COURSE

PREPARED BY

RCA INSTITUTES, INC.

A SERVICE OF RADIO CORPORATION OF AMERICA

HOME STUDY DEPARTMENT
350 West 4th St., New York 14, N. Y.

LESSON TWENTY-FOUR

TELEVISION FUNDAMENTALS (PART 2)

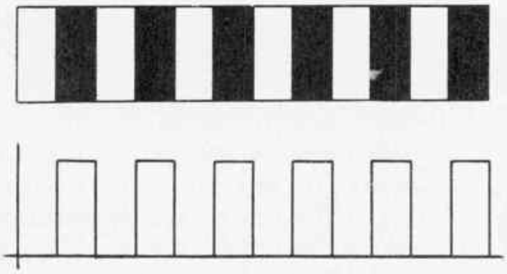

Lesson 24

RESOLUTION

24-1. In the previous lesson, the general aspects of television were discussed to familiarize you with the overall pattern of the system. Now we can proceed further to analyze some specific problems that are important in understanding the possibilities and limitations of a television receiver. One of the most important of these is the problem of picture quality in terms of the number of individual picture elements in the reproduced image.

What is Resolution?. – The resolution of the reproduced image is its ability to show adjacent picture elements as separate areas that the eye can distinguish from each other. The closer the picture elements can be to each other, and still be seen by the eye as separate details, the better the resolution is. The quality of a picture is also called *definition* or *detail*, as the resolution determines how many individual details you can distinguish in the picture.

The better the resolution, the more details evident in the image, and the better is the quality of the reproduced picture. The picture is more pleasing to the eye because of the apparent depth when there are many picture elements to fill in the details of the image. This effect is illustrated below, showing a picture with poor resolution in Fig. 24-1(a), and a reproduction approximately equivalent to a good picture in (b).

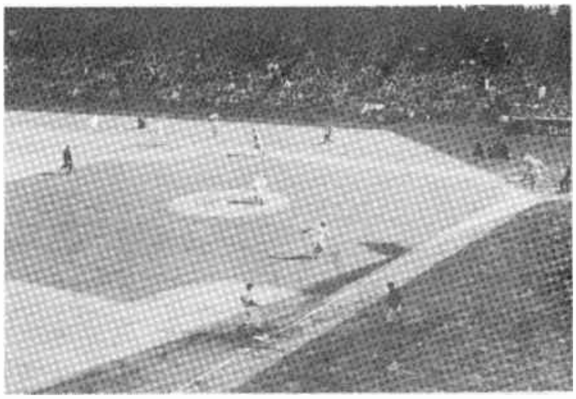

Fig. 24-1 (a)

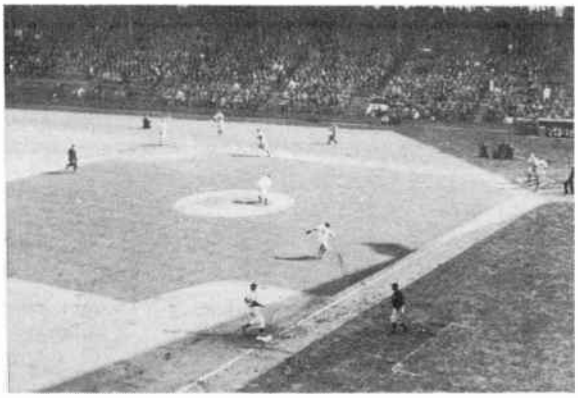

Fig. 24-1 (b)

How the Eye Distinguishes Picture Details. – The human eye sees because it contains a huge number of individual light-sensitive cells called the "rods and cones" of the *retina*. Individually or in small groups, they connect by separate nerve fibers with the brain. When light from two different elements of a scene we are viewing – such as two leaves on a tree – falls on two groups of cells that function independently of each other, two separate impulses are transmitted to the brain and we see two distinct leaves. This action of the eye is illustrated here, with A and B representing two leaves, or any other pair of objects relatively close together.

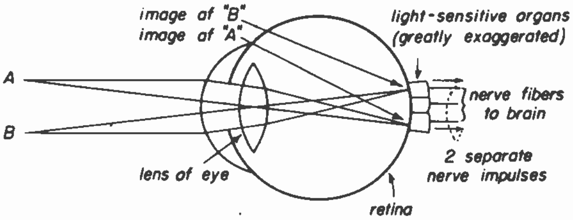

Fig. 24-2

However, if the two leaves are very close together (or very far away) the light from both of them will focus on the same cell in the retina, and the two objects appear as one, as illustrated in Fig. 24-3.

In this case, the eye cannot resolve the two separate details, but perceives them as a single detail. Experiments with large numbers of people have shown that for average eyes, if two small details of an object are not separated from each other by at least 1/2000th of the distance from the object to the eye, they cannot be seen as separate details, but appear to blend into one.

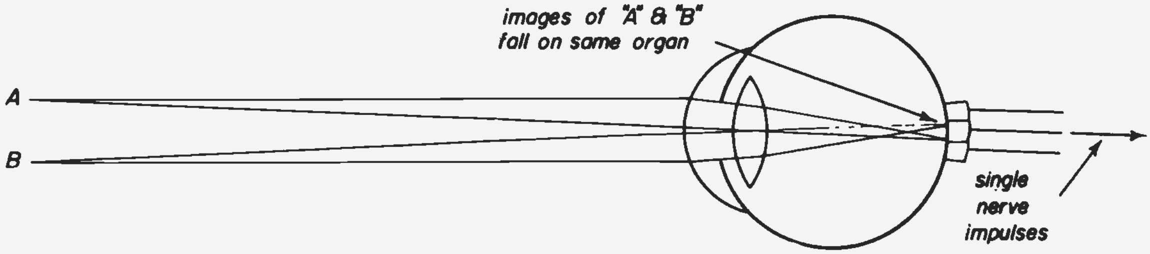

Fig. 24-3

Putting it another way, if the angle between lines drawn from two details to the eye is less than one minute of arc (1/60th of a degree), the eye will see them as one detail.

Viewing Distance. – This principle of resolution of human vision is important with regard to proper viewing distance for watching the television picture. There are set owners who would never think of looking at the pictures in their newspaper through a magnifying glass, yet they do the same thing, in effect, when they plant their faces a few inches infront of their television screens. Then they complain that the picture "doesn't look right". Of course it doesn't, because it isn't supposed to at that distance. The picture should be viewed from a distance great enough to make it impossible to resolve the individual scanning lines. Also, the "grain" of the picture, which consists of speckles due to inherent noise, is not obvious then.

At the opposite extreme, some people will sit 20-30 ft. from a 12 in. screen and complain that the picture looks small. In this case much of the detail in the reproduced picture is wasted, because at this relatively great distance the eye cannot distinguish the small individual elements of the picture.

The proper viewing distance depends upon the size of the picture tube and personal preferences. A general rule to follow for judging the best distance is to multiply the height of the picture by a factor ranging from about 6, for those who like to sit up close, to approximately 15.

Vertical Resolution. – By vertical resolution we mean the ability of the eye to distinguish individual details below or above each other in the vertical direction in the picture. The horizontal resolution involves details that are adjacent to each other in the horizontal direction.

In a printed photograph it is necessary to consider only the overall detail of the picture, since the factors affecting resolution are the same in both the horizontal and vertical directions. In television, however, the vertical and horizontal resolution must be considered *separately*, because of the way the picture is produced. Normally, the resolution is approximately the same in both directions, but when trouble develops in the receiver, the horizontal resolution can be reduced without affecting the vertical resolution, or vice versa. It is important, therefore, to understand the factors that affect the resolution in both the horizontal and vertical directions.

The most important factor in determining the amount of vertical resolution in the television picture is the number of scanning lines used. There cannot be more details in the vertical direction than there are lines, since at best two scanning lines can show no more than two vertical details.

However, the number of vertical details reproduced in the picture is much less than the total 525 scanning lines. One reason is the fact that 5-8% of the scanning lines occur during the vertical blanking time, when no picture information is scanned. Deducting approximately 8% of the 525 total, which is about 40 inactive lines, this leaves only 485 active scanning lines.

Furthermore, not all of these active lines are effective in showing individual vertical details of the picture. To see why, consider the illustration in Fig. 24-4, showing a vertical column of alternate black and white picture elements, each as high as the width of a scanning line. If the scanning lines were to fall exactly on the equally spaced details, as shown in A of Fig. 24-4, each of the picture elements would be reproduced by a scanning line. But when the beam straddles adjacent elements, as in B and C of the illustration, some of the individual details are lost. In B, where two adjacent black and white elements are straddled to the same extent, the resulting reproduction shows a medium gray bar instead of the black and white individual details. The reproduction in C shows some degree of vertical detail because the straddling of the black and white elements is not complete.

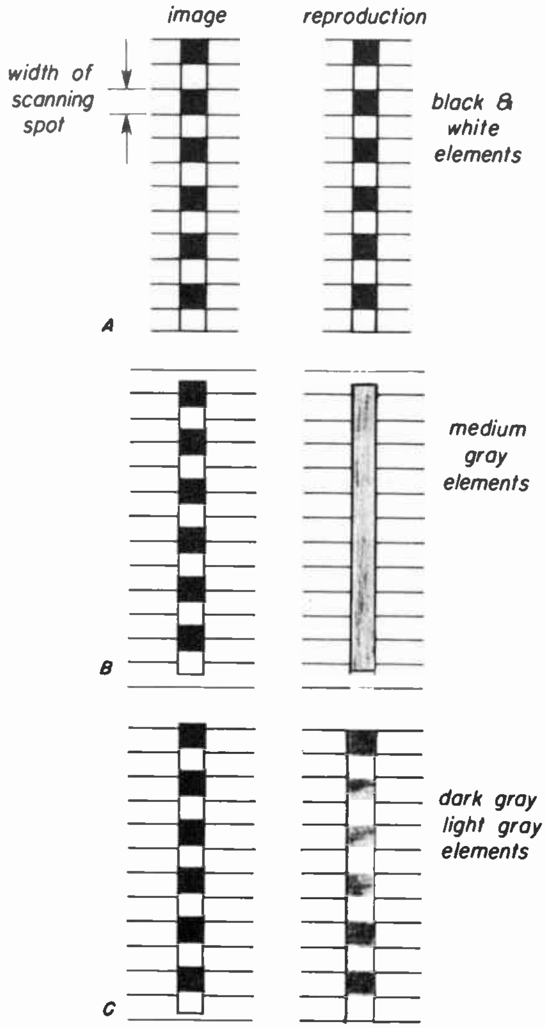

Fig. 24-4

In practice, television pictures do not consist of alternating black and white boxes that are the same size as the scanning lines, so that the problem of straddling the individual elements is not quite so severe. Still, the number of vertical details that can be reproduced averages only about 75% of the number of active scanning lines. Calculating 75% of 485, which is approximately 360, this is about the maximum number of vertical details possible in a television reproduction, the exact value depending upon the picture content.

In obtaining the best vertical resolution, it is assumed that the interlacing is perfect, so that the scanning lines do not overlap, and thus reduce the 485 active lines. Also, the beam focus must be normal so that the scanning spot is small enough to produce individual scanning lines. Naturally, the best focus is also required to obtain maximum horizontal resolution. The brightness and contrast must also be normal, as excessive brilliance can reduce the focus and the resolution.

Horizontal Resolution. – The factor that limits the resolution in the horizontal direction is the maximum possible speed at which the intensity of the scanning beam can be varied to show variations in shading between black and white. This, in turn, depends upon the rate of the amplitude variations in the camera signal from instant to instant, which determines the high frequency components of the signal. To illustrate this idea, suppose that the beam scans a horizontal line consisting of alternate black and white bars like this:

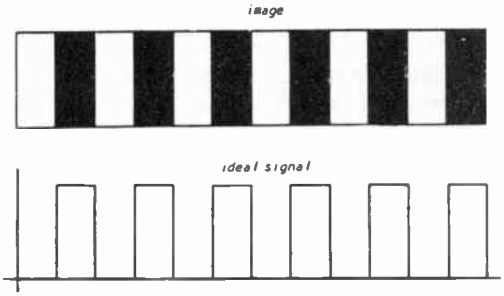

Fig. 24-5

The rectangular wave shown below the image represents the ideal case of electrical signal variations that correspond exactly to the black and white details in the horizontal line of the image. Remember now that it takes a definite amount of time for the scanning beam to move across all the details in the line. Specifically, this is the unblanked trace period for a horizontal line, which is equal to approximately 53 microseconds, but for the moment we are only interested in some comparisons. If the number of black and white elements in Fig. 24-5 were doubled, the corresponding electrical signal would have twice as many amplitude variations, within the same amount of time. As a result, the frequency of the equivalent electrical signal would be doubled for the increased amount of detail. In order to show more horizontal detail, therefore, the equivalent electrical variations must have a higher frequency.

The actual camera signal for the horizontal details in the image will not have the rectangular shape shown for the ideal case in Fig. 24-5, but will be more like the sine wave signal shown here:

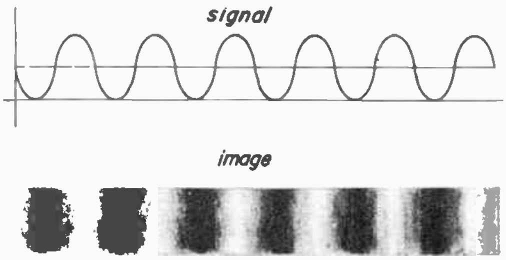

Fig. 24-6

Because the signal variations cannot change instantaneously between the black and white levels, the reproduced picture will not show the sharp divisions between adjacent details but will appear as in Fig. 24-6.

This inability to reproduce instantaneous changes in light level for details in the horizontal direction is related to the high frequency components of the camera signal, since the more rapid change in the amplitude the higher is the frequency. However, the highest signal frequency is limited to approximately 4 mc by the fact that this is the highest video modulating frequency that can be transmitted by present methods in the standard 6 mc television broadcast channel. As a result of the 4 mc restriction, the horizontal resolution is limited to about 420 details in present practice.

The way that the value of 420 horizontal details is calculated for 4 mc signal is illustrated here:

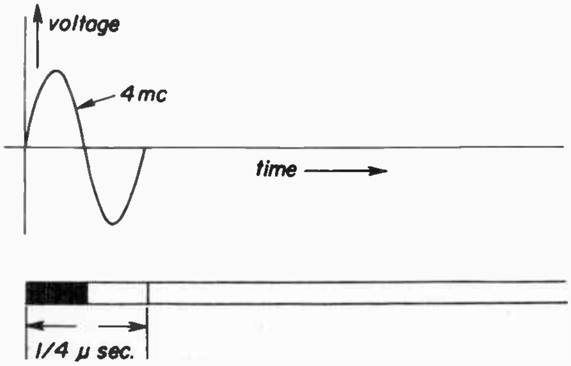

Fig. 24-7

The 4 mc sine wave cycle shown above the picture elements represents approximately the information in the two individual details. Notice that one cycle of the signal corresponds to the two adjacent details, one black and one white. The first thing to know is the period of time required for one cycle of the 4 mc signal. This is the reciprocal of 4 mc, which is ¼ microsecond. Remember now that the scanning time for the unblanked part of the visible horizontal trace is approximately 53 μsec. During this amount of time, therefore, 53 × 4, or 212 cycles of 4 mc signal could be produced since 4 cycles occur in one microsecond. This corresponds to 212 pairs of black and white horizontal picture elements. The total number of details in the horizontal line. then, is 212 × 2 or 424.

Total Number of Picture Details. – With approximately 360 as a maximum number of vertical details, limited primarily by the number of scanning lines, and about 420 horizontal details as a maximum because of the restrictions of 4 mc modulation in the transmission channel, the total number of picture elements in the entire image can have a maximum value of 360 × 430, or about 150,000. This is a rough measure of the best possible resolution in the television picture, which is approximately equal to the detail in a 16 mm film frame.

The horizontal and vertical resolution are about the same, even though there are more horizontal details. Don't forget that the width of of the television picture is 4/3 the height, so that if the number of horizontal details is 4/3 greater than the amount of vertical details, the resolution, in details per inch, will be equal in both directions.

It is important to realize that the maximum possible number of details in the television reproduction is the same regardless of the size of the picture. Since the television standards specify the number of scanning lines and the high frequency limits of the transmission channel, these set the maximum vertical and horizontal resolution. The maximum number of details in a 19 in. TV picture, for example, is the same 150,000 that can be obtained in a 12 in. picture.

THE COMPOSITE VIDEO SIGNAL

24-2. The composite video signal is a varying voltage that contains all the information needed to reproduce the picture. Included as a part of the composite video are: (1) the camera signal variations corresponding to the changes in light and shadow along the scanning lines as they cross the image, which make up the desired picture information; (2) blanking pulses, for blanking out the scanning retraces, both horizontal and vertical; (3) synchronizing pulses to insure correct timing of the horizontal and vertical scanning.

Components of the Video Signal. – To illustrate these components of the video signal, the information for two lines of the many in the complete picture is shown in Fig. 24-8.

The video is shown with maximum amplitude for the sync, because this is the way the signal is transmitted. Negative polarity of transmission is used, which produces the peak carrier amplitude for the tip of sync, while the lowest carrier amplitudes correspond to the whitest picture information. Note the amplitude levels indicated in Fig. 24-8. Starting with the top of the sync pulses, this is the maximum or 100% signal amplitude. In terms of this peak value, the blanking level, which represents the tops of the blanking pulses, is at approximately the 75% level. This can be considered as the black reference level, since it should be reproduced as black to make the blanking effective. The blanking level is also called the pedestal level because it serves as a pedestal for the sync pulses. These are added to the composite video signal after the blanking pulses have been clipped at the desired blanking level, thereby setting the black reference value.

Amplitude values in the video signal lower than the 75% level are the camera signal, with variations corresponding to the desired picture information. Lower amplitudes represent whiter picture information, as the signal variations are further removed from the black level. The maximum white areas in the picture are made to produce a signal level that is 15% or less of the peak amplitude, in order to insure a wide enough amplitude swing between black and white for a suitable range of contrast in the reproduced picture.

Notice that the black peaks in the camera signal are shown a little below the blanking level, by about 5%, according to general TV broadcasting practice. This is done to minimize the possibility of any picture information extending above the 75% level, which could interfere with the sync. The top 25% of the signal amplitude is used only for the synchronizing pulses.

The Video Signal and the Reproduced Picture. – Still referring to Fig. 24-8, now we can trace the signal variations in a sequential order, to see how these correspond to the reproduced picture. Starting at the left in the illustration, this is the time when the scanning beam is at the left side of the frame, just beginning the active scan of

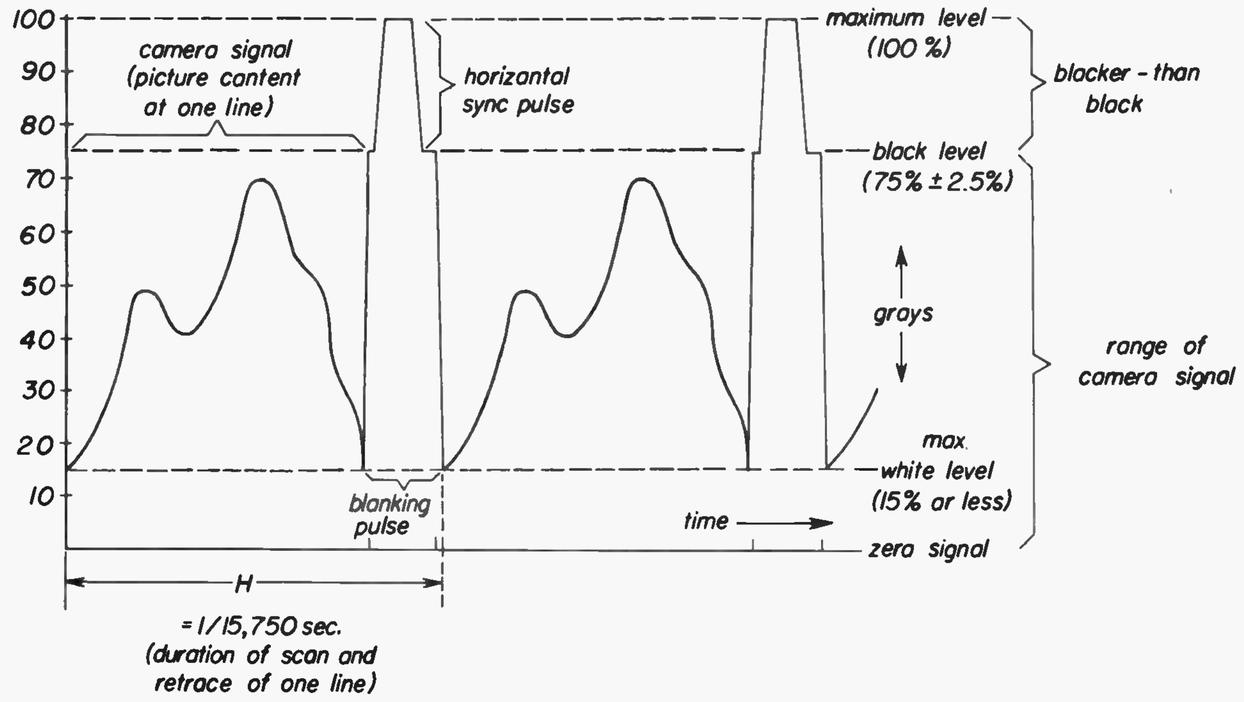

Fig. 24-8

picture information in one line. The amplitude is at the maximum white level, which means that there is a maximum white area at the extreme left side of the line. As time passes, the beam scans across the line, reproducing the shading values that correspond to the amplitude levels in the video signal. From the maximum white at the left, the picture information becomes darker to a medium gray about one third of the distance across the line. After this the signal dips a little and then rises to black, before coming back to a white level at the end of the active line scan. At this time the horizontal blanking pulse occurs, raising the video signal amplitude to the black reference level. This is done in order to blank out the scanning beam in preparation for the retrace, which will be produced by the sync pulses immediately after the leading edge of the blanking pulse.

The beam remains blanked for the entire time of the blanking pulse width. During this time, the scanning generator is made to produce the flyback, with the timing determined by the sync. The flyback will start very soon after blanking, so that the entire retrace can be finished before the blanking is over.

As illustrated by the second line of camera signal in Fig. 24-8, the picture information is maximum white again after the previous blanking pulses. Progressing to the right, the signal rises to a dark grey, dips, and then goes to black before dropping to maximum white at the right side of the frame, just as in the line previously scanned. Here another horizontal blanking pulse again extinguishes the beam just before the next horizontal retrace. This action continues line by line, in a sequential order, for all the elements and all the lines in the picture.

The RTMA Standard Waveform. – The details of the composite video signal are set by the standards adopted in 1941 by the RTMA, and approved by the FCC with some modification in 1944, when the number of scanning lines was changed from 441 to the present standard of 525. Some of the features require rigid standards, while some variation is permitted for others, in order to permit mass production of receivers that can receive pictures from all TV broadcast stations. This need of definite standards is not quite so great in conventional AM sound radio broadcasting, but in television it is critical because of the synchronizing problem.

The RTMA standard TV waveform is illustrated in Fig. 24-9, showing two samples of the composite video signal that indicate how it combines camera signal, horizontal and vertical blanking pulses, and the sync pulses. The waveforms labelled (1) and (2) illustrate the half-line difference of the sync timing in alternate fields, since the graphs show amplitude variations with respect to time. The waveforms labelled (3), (4) and (5) show details of the sync and blanking pulses. The time intervals related to horizontal scanning are indicated in terms of the line scanning period H, which is equal to 1/15,750 sec. or 63.5 microseconds. The vertical field scanning period V is 1/60 sec.

Horizontal Blanking. – Between the camera signals for each consecutive line is a square-topped pulse that raises the signal amplitude to the blanking, or black reference level. These are the horizontal blanking pulses, which extinguish the scanning beam at the end of each active line trace, in order to blank out the horizontal retraces. Since a blanking signal is required for each line, the frequency of the horizontal blanking pulses is 15,750 cps.

The width of the horizontal blanking pulse has an average value of 0.17H, which is 17% of 63.5 μsec or 10.8 μsec. Subtracting this horizontal blanking time of 10.8 μsec from the total line scanning interval of 63.5 μsec, this leaves 52.7 or approximately 53 μsec as the unblanked scanning time for the visible picture information in one line.

Horizontal Sync. – Superimposed on each horizontal blanking pulse is a horizontal sync pulse, both occuring at the repetition rate of 15,750 cps. Each sync pulse occurs within the time providing for blanking of the retraces, for the beginning of the sync pulse coincides with the start of the flyback. However, the length of time required for the retrace is not determined by the sync pulse, but depends on the characteristics of the scanning circuits.

Referring to detail (3) in Fig. 24-9, note the *front porch* and *back porch* of a horizontal sync pulse. The front porch is the time when the signal is at the blanking level, just before the leading edge of the sync pulse occurs to raise the amplitude to the 100% level of the tip of sync. During this time, which is approximately 0.02H or 1.27 μsec, the beam is normally moving to the right to complete the trace, although blanking time has started. Since the flyback is generally timed to begin with the leading edge of the sync pulse, the retrace starts about 1.27 μsec after blanking. Blanking continues during the entire time of the sync pulse, which is approximately 0.08H ± 0.01, or about 5 sec. After the sync pulse, blanking is still maintained during the back porch time of 0.07H, or approximately 4.5 μsec.

The retrace must be completed before the end of the back porch time. Otherwise picture information that should be scanned at the beginning of trace time will occur toward the end of retrace, while picture information that should come later is folded over this at the left side of the frame. In a normal scanning circuit, though, the flyback is completed well within the blanking time, as it usually takes about seven microseconds.

Vertical Blanking. – Referring to waveforms (1) and (2) in Fig. 24-9, it can be seen that the vertical blanking period extends from the first equalizing pulse after the four horizontal sync pulses shown at the left in the figure, through a relatively long time of about 15 lines. During all this time the signal level is at the blanking level, or higher for sync pulses, without any picture information. As indicated at the bottom of waveform (1) the vertical blanking time is 0.05–0.08V, which is 5–8% of 1/60 second, or about 85000 microseconds. Since the vertical scanning period of 1/60 second includes 262½ horizontal lines, 5–8% of V is equal to 13-20 lines. These lines are blanked out, therefore, in each field. The

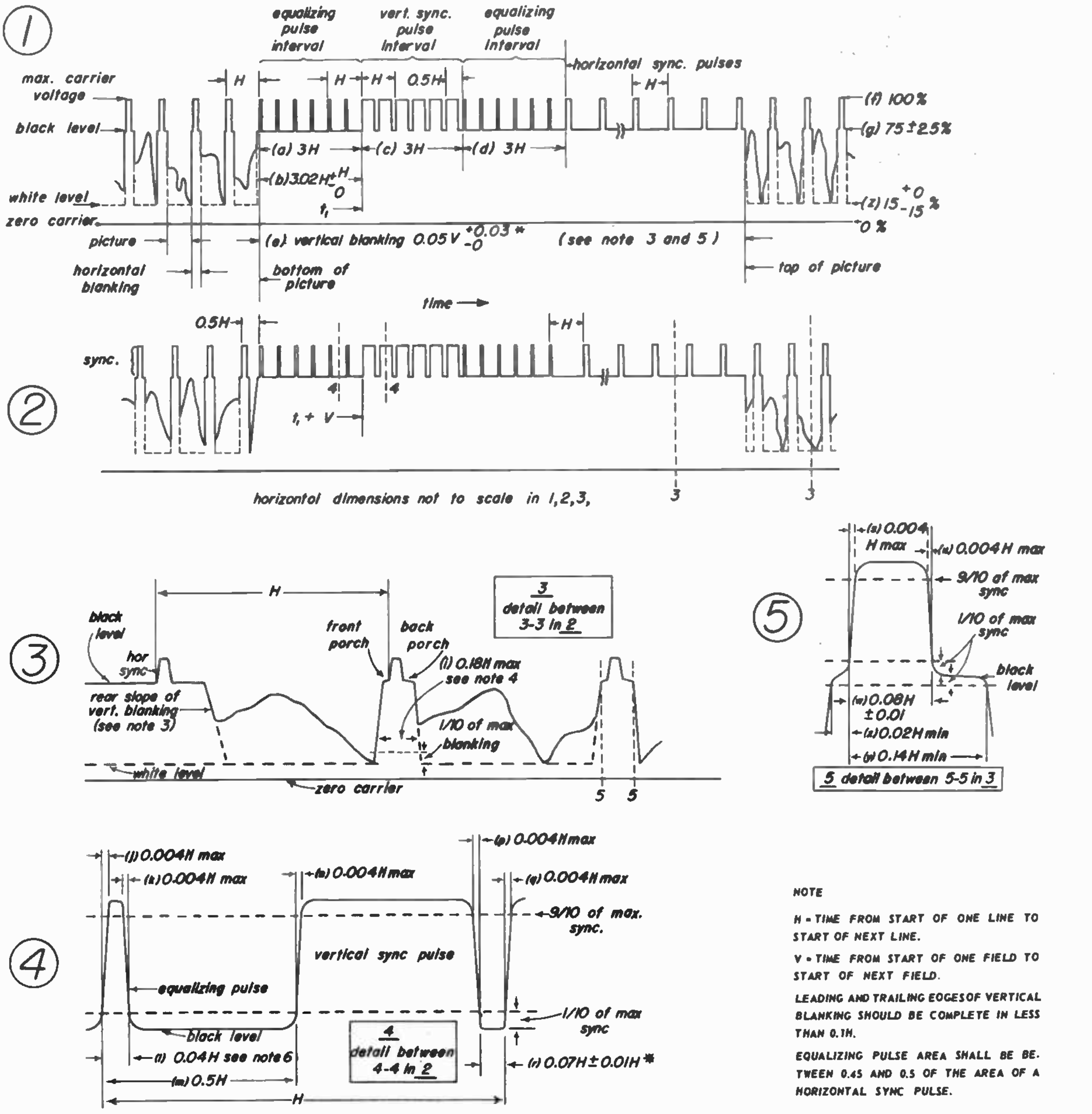

NOTE

H - TIME FROM START OF ONE LINE TO START OF NEXT LINE.

V - TIME FROM START OF ONE FIELD TO START OF NEXT FIELD.

LEADING AND TRAILING EDGES OF VERTICAL BLANKING SHOULD BE COMPLETE IN LESS THAN 0.1H.

EQUALIZING PULSE AREA SHALL BE BETWEEN 0.45 AND 0.5 OF THE AREA OF A HORIZONTAL SYNC PULSE.

Fig. 24-9

exact number depends on the width of vertical blanking pulse, within the established tolerance, as used by each TV broadcast station. It does not matter that there may be a slight difference among various stations, because the transmitted signal makes the receiver follow the transmitter with respect to blanking and sync.

During the vertical blanking time, the video signal includes the vertical sync pulse, which produces the vertical flyback. This, of course, is the primary reason for the vertical blanking pulse that blanks out the beam during vertical retrace. However, additional sync pulses also occur in the vertical blanking time. The equalizing pulses before and after the vertical sync pulse interval help the synchronization of the vertical scanning; the additional horizontal pulses toward the end of vertical blanking maintain the horizontal synchronization, which is still necessary for good interlacing even though these lines are blanked out. The long vertical blanking period makes it relatively easy to complete the vertical retrace and start the active linear vertical trace within the blanking time.

Normally the vertical retrace takes the time equal to about four or five horizontal lines, so that besides the blanked retrace lines, some of the lines produced at the bottom and top of the frame during the vertical trace are also blanked. The correlation of vertical blanking with the vertical motion of the scanning beam is as follows: (1) when the beam is down toward the bottom of the frame, completing a vertical trace, the vertical blanking pulse raises the video voltage to the blanking level, extinguishing the beam. (2) The trace downward continues, however, after the beginning of vertical blanking, because the retrace will not begin until the time of the vertical sync pulse. As a result, about three or four lines are blanked at the bottom of each field. (3) some time during the vertical sync pulse, it will cause the scanning circuits to produce the vertical flyback, and the beam will start to retrace to the top of the frame. (4) The exact number of retrace lines depends upon the vertical scanning circuit but it is unimportant, except that it must be the same number for every field, and must be within the blanking time. (5) When the flyback is completed the beam starts the next vertical scan downward. This is normally accomplished within approximately five lines, so that about 5-10 lines produced in each field during the downward trace are blanked out at the top, since they occur within the vertical blanking period.

The Vertical Sync Pulse. – You can appreciate the fact that the vertical sync pulses must be different from the horizontal sync, so that in the synchronization of the scanning circuits, the vertical deflection oscillator will be triggered only by the vertical sync, without interference from the horizontal pulses. The method followed in providing two separate sync signals is to make the vertical sync pulses much wider, providing sync voltage for a longer period of time than the horizontal sync pulses. As can be seen in Fig. 24-9, and as illustrated below for a single vertical sync interval, this width is 3H, which is the time of 3 complete horizontal lines, equal to approximately 190 microseconds.

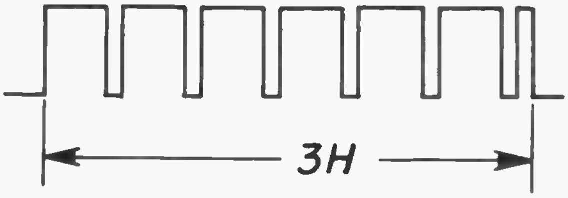

Fig. 24-10

The overall effect of the vertical sync pulse, with its notches, provides a triggering voltage to synchronize the vertical deflection oscillator. The vertical oscillator will know the vertical pulse by its much greater width. This is possible because the vertical sync signal for the deflection oscillator depends upon the average value of charge of a condenser in the receiver's sync circuits. The effect of the notches is filtered out, allowing the vertical synchronization to proceed as through the vertical sync pulse were continuous.

The notches, in the vertical sync pulses, which are called *serrations*, have the function of providing a sharp fall and rise in the sync voltage at regular half-line intervals during the time of vertical synchronization. These are needed to provide horizontal synchronization in the horizontal deflection circuits, while the vertical scanning is being synchronized. This continuity of the horizontal synchronization is absolutely essential to maintain the interlace, even though all the horizontal lines produced during vertical synchronization are blanked out. The reason for inserting the serrations at half-line intervals is to allow alternate ones to be used for horizontal sync in even and odd fields.

Sync Timing in Alternate Fields. – Remember that there are 262½ lines in each field. Consider that the first field starts at the beginning of a line, at the left side of the raster. The corresponding line in the second field must therefore occur 262½ lines later. This will be in the middle of a horizontal line because of the additional half-line. In the third field, 525 lines later, the scanning beam should be back to where it started at the beginning of a line as in the first field.

As a result of the half-line difference between even and odd fields, alternate vertical sync pulses are displaced by a half a line with respect to the horizontal sync pulse. Therefore, every other serration in the vertical pulse is used for horizontal sync in one field. If you are wondering what happens with a pulse that occurs a half-line off the correct time, the answer is – nothing. A sync pulse must come approximately at the correct intervals to be effective in holding the deflection oscillator at the synchronizing frequency.

The Equalizing Pulses. – This problem of sync timing in alternate fields is also the reason for adding equalizing pulses to the sync signal, which have the function of increasing the accuracy of vertical synchronization in even and odd fields. Referring back to details (1) and (2) in Fig. 24-9, you can see that the equalizing pulse interval includes 6 narrow pulses at half-line intervals, with one group immediately before the vertical pulse and one group following. Surrounding the vertical pulse in this way, the equalizing pulses can equalize the difference in the amount of vertical sync signal obtained in the vertical sync circuits in alternate fields. A slight difference is bound to occur because of the half-line difference between the last horizontal pulse and the beginning of the vertical pulse, which means that the average amount of sync voltage is different here for even and odd fields. These two average values of sync voltage around the vertical pulse are made nearly the same by the addition of the equalizing pulses, however, because they divide the periods of unequal voltages into several voltage variations that are equal.

Sync Separation. – The sync pulses must be separated from the remainder of the composite video signal in the receiver, in order to provide horizontal synchronizing signals for the horizontal deflection circuits, and vertical synchronizing signals for the vertical deflection circuits. This sync separation is done in two steps, including amplitude separation of all the sync pulses from the camera signal, and the waveform separation of the horizontal from the vertical sync.

The amplitude separation is accomplished by a stage called the *sync separator* or *sync clipper.* What this stage does is clip off the total sync from the composite video signal, by means of the proper bias and plate voltage for the amount of signal drive. The principle of clipping is illustrated by the tube's grid-plate characteristic, shown here:

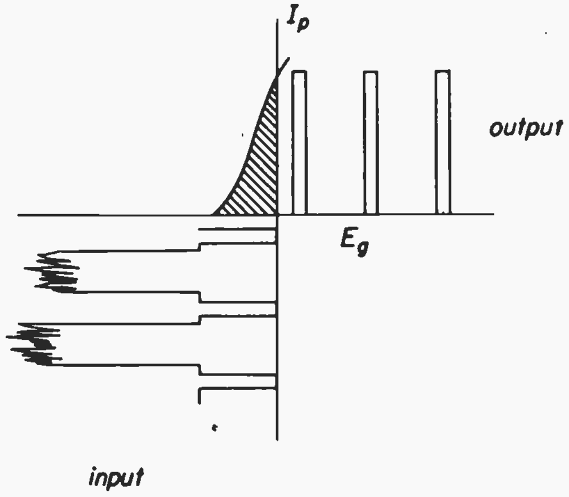

Fig. 24-11

Since plate current flows only for the sync part of the input signal, as indicated by the shaded area in this illustration, the output signal in the plate circuit contains only the sync pulses.

When the total sync voltage has been obtained, without any camera signal, the sync is then applied to RC filter circuits to separate the horizontal and vertical synchronizing signals. The arrangement of the waveform separation circuits is shown in Fig. 24-12.

With the total sync applied to an RC circuit having a long time constant, this acts as a low-pass filter, allowing the low frequency vertical pulses to develop sync voltage across C_1. This output can trigger the vertical deflection oscillator to hold it at the vertical synchronizing frequency of 60 cps.

The value of the equalizing pulses in improving the accuracy of vertical synchronization can be seen in terms of the voltage across C_1, which is equal to the average sync voltage. Without the equalizing pulses, the voltage across C_1 would

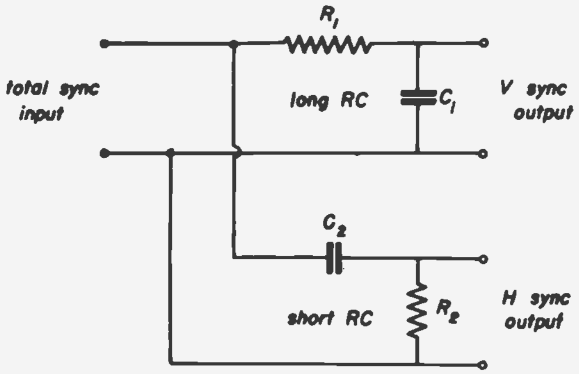

Fig. 24.12

be different for even and odd fields, as shown in Fig. 24-13.

The difference in voltage could cause the vertical deflection generator to be triggered at slightly different times, since the triggering action occurs when the sync amplitude reaches a critical amplitude. The difference in timing of alternate fields need be only a fraction of a horizontal line period to affect the interlace. With the equalizing pulses, however, the average value of the sync voltage around the vertical pulse, and the output voltage across C_1, is more nearly the same for alternate fields. The notches in the vertical pulse across C_1, which could cause erratic timing because of identical voltages at slightly different times, is filtered out by using a two-or three-section filter.

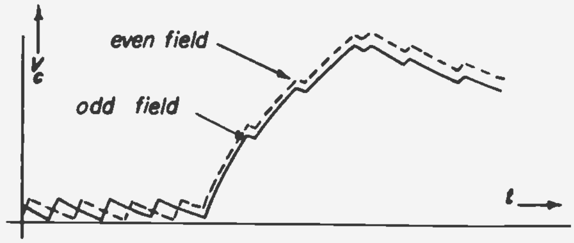

Fig. 24-13

The voltage across R2 in the short time constant circuit of Fig. 24-12, however, corresponds to the higher frequency sync pulses used for horizontal synchronization. This sync signal can be used to hold the horizontal deflection oscillator at the synchronizing frequency of 15,750 cps.

Although not directly related to the synchronizing problem, it is useful to keep in mind the fact that although the sync is clipped in the synchronizing circuits, the complete composite video signal is coupled to the kinescope. Since the sync is blacker than the blanking level they are not ordinarily visible but when the brightness is turned up they can be seen as the darker parts of the blanking bars. This effect is shown here:

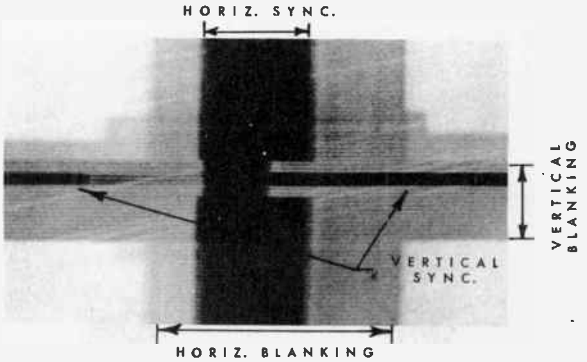

Fig. 24-14

BRIGHTNESS AND CONTRAST IN THE VIDEO SIGNAL

24-3. – We have already seen how amplitude levels of the video signal correspond to light values in the picture. If this is analyzed a little further, we can examine some additional characteristics of the video signal that are important because of their effect on brightness and contrast. Suppose that the televised image consists of five vertical bars, as shown in the center figure A of Fig. 24-15 shown in next page.

If all five bars are made lighter than the original in A, increasing the overall brightness, the resulting picture will be as in B, or if the brightness is reduced, the result will be as in C. Notice that these two effects are caused by a change in average brightness.

If, however, the dark bars are made darker and the light one is made whiter, the result is as shown in D. This is an increase in contrast. Or if the dark bars are made less dark and the light bars are darker, as in E, the contrast is reduced.

Brightness Level and Apparent Contrast. – By noting the contrast and brightness values in Fig. 24-15, you can see an interesting relationship that increases the apparent contrast at lower brightness levels. The reason for this will be evident when you consider the following com-

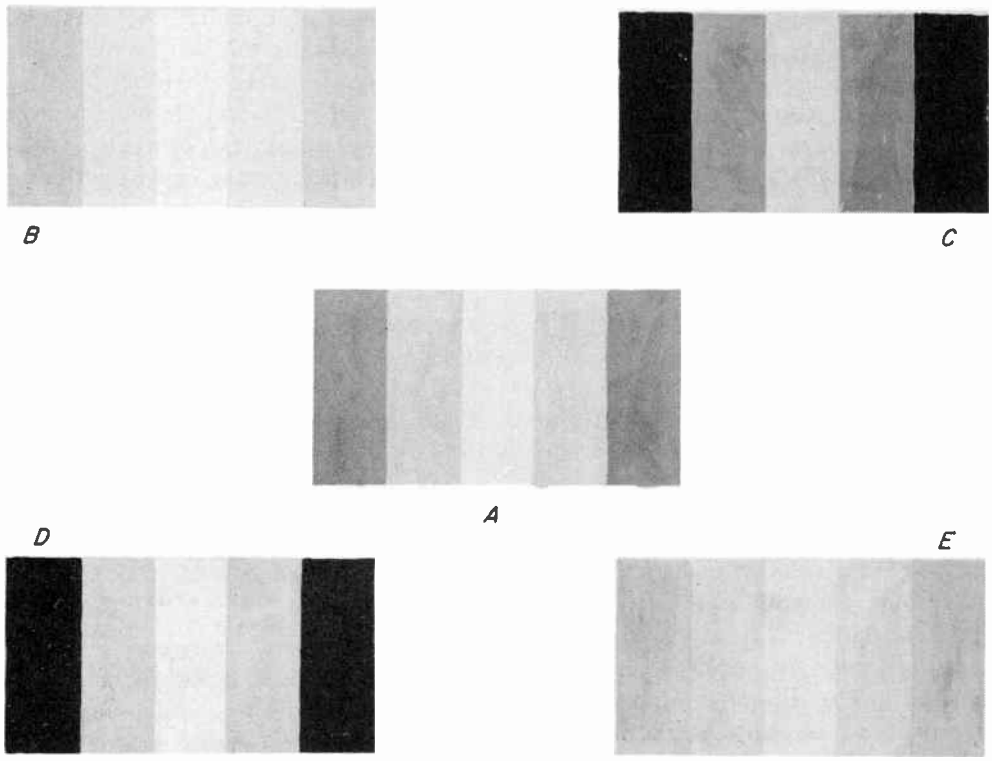

Fig. 24-15

parison. If you light a candle in a brightly lighted room, the candle does not seem any lighter than the room illumination. But in a dark room the candle will seem very much brighter, even though it adds the same amount of illumination in both cases.

The eye's perception of changes in brightness is proportional to the *percentage of change* in illumination, not to the absolute amount of illumination. For this reason, the image shown in C of Fig. 24-15 seems to have greater contrast than A, for the same absolute difference in light from the darkest to the lightest level. The corresponding video signals for A and C have the same peak-to-peak amplitude swing, representing the same amount of absolute contrast.

How The Video Signal Represents Brightness and Contrast. – Now let us examine the video signals for one scanning line across each image, corresponding to the picture information in the bars of Fig. 24-15. The video signals for each of the five different illustrations of brightness and contrast are shown in Fig. 24-16.

Notice that the video signal has steps in voltage, towards either white or black, representing the change of grey level for each bar in the image. In A, B and C the change of voltage from one bar to the next is the same. The peak-to-peak voltage and the absolute contrast in the reproduced picture are also the same for those three video signals.

However, notice that the *average* value is different. This is indicated by the horizontal line through the shaded area to show the average of all the instantaneous amplitude values. In comparison with A, the average value in B is further from the black level, corresponding to brighter average illumination, while in C the average illumination is darker.

Comparing D and E now, notice that the peak-to-peak signal swing in D is greater than E, corresponding to the increased contrast.

Summarizing these effects: (1) the contrast in the picture depends upon the peak-to-peak change in signal voltage from the darkest to the brightest element; (2) the *apparent* contrast is greater at low brightness levels; (3) the average brightness of the picture depends upon the average value of the video signal.

The D-c Component. – It appears, then, that the average brightness of the picture can be changed by adding a d-c component to the video

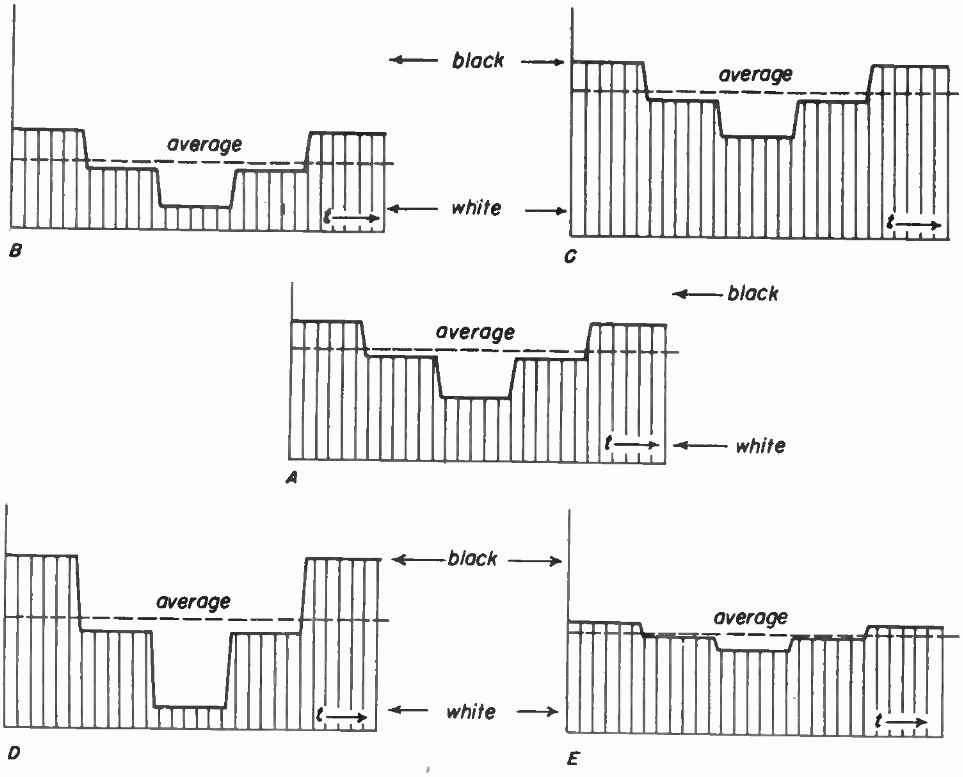

Fig. 24-16

signal to shift the average value axis of the a-c variations in the video voltage. This idea is illustrated here:

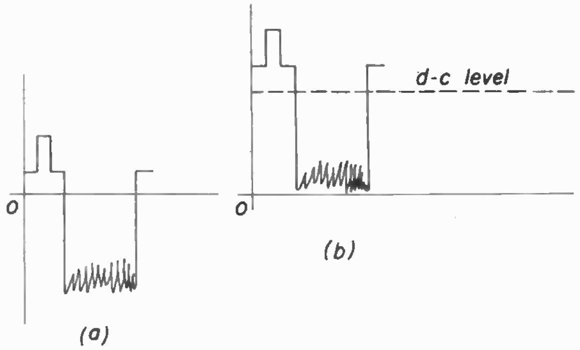

Fig. 24-17

In (a), the video voltage is shown as an a-c signal with its average value level being the zero axis. In (b) though, the added d-c component shifts the average value axis to the level of the added d-c component. The a-c axis and the d-c level coincide; the a-c signal can just be considered as having a d-c level of zero. The a-c variations of the signal in (b) are the same as in (a), but they vary above and below a different d-c axis, changing the average brightness value of the signal. The change here is toward the black level, decreasing the brightness, but the d-c component can be added in the opposite polarity to make the picture brighter.

D-c Insertion. – In practice, a d-c component is added to the a-c video signal, in order to set the average brightness at the correct level in the reproduced picture. The required d-c component is inserted by a control amplifier in the studio equipment at the broadcast station. This sets the black level at a value that produces cutoff on the kinescope grid, thereby allowing reproduction of the picture with the correct brightness level. The d-c component must be inserted because there is no brightness reference in the a-c camera signal variations. Different amounts can be added, depending upon the d-c component required for the brightness in the scene being televised. The inserted d-c component is included in the video signal that modulates the transmitted picture carrier.

At the receiver the d-c component is maintained as a part of the video signal, through the r-f and i-f stages amplifying the modulated picture carrier signal. The output of the picture second detector, therefore, is the desired composite video signal, including the a-c signal variations corresponding to the picture information, and a d-c component proportional to the average brightness of the image.

Loss of the D-c Component. – Since the video signal includes a d-c component, this can be lost, or blocked, when the signal is capacitively coupled from one video stage to another. The coupling condenser between stages blocks the d-c component as the condenser charges to the signal's average value and maintains this charge while the signal variations above and below the average axis are coupled to the grid circuit of the next stage. As a result of the loss of the d-c component, the effect on the video signal is to alter its brightness values.

This effect can be illustrated with a few graphs. Fig. 24-18, shows video signal for a bright picture in A and dark picture in B.

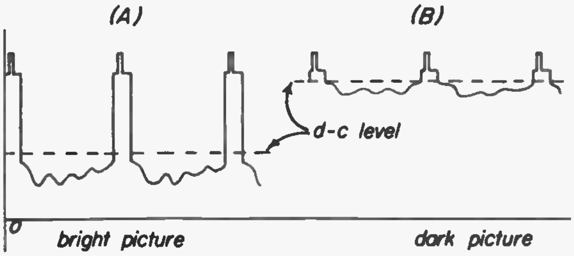

Fig. 24-18

Notice that the difference in brightness is evident by the different d-c levels for the two signals. In A the average axis is much further from the pedestal level, which is black, indicating that the average light level is brighter than the signal in B.

When the d-c component is lost, however, this indication of different brightness levels is lost, as shown here:

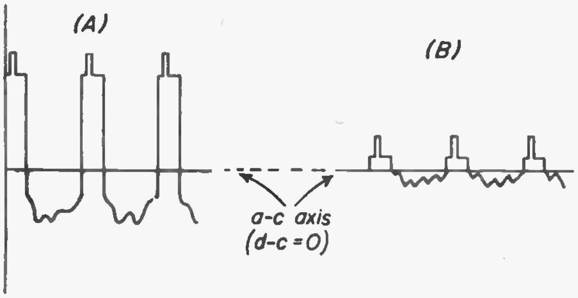

Fig. 24-19

With the two a-c signals on the common zero axis, notice that the black, pedestal voltage is at two different levels. If one is set to reproduce black in the picture, the other will not be correct. They both cannot reproduce the same black level because the d-c component that set a common black level is now missing.

D-c Reinsertion. – In order to correct for this, the d-c component must be reinserted before coupling the signal to the kinescope grid. Stating it another way, a voltage value corresponding to black in one picture must represent the black level for any case. Since the pedestal or blanking level corresponds to black, it is necessary to set the pedestals at a common voltage level, so that they can be lined up at the cutoff voltage of the kinescope grid to provide the black reference level. The light values in the picture are then determined by how far the corresponding video voltages are below the black level.

It might appear at first that the d-c component, once lost, could not be recovered, but this is not so. By the use of a rectifier and a long time constant RC circuit, the a-c video signal can be rectified to provide the d-c component needed to line up the pedestals. Such a circuit is called a *d-c restorer* or *clamper*. The operation of this circuit will be explained in a later Lesson, but for now it will be enough to remember what it is for.

Don't lose sight of the fact that the d-c restorer is necessary only when the d-c component is lost in the coupling between stages of the video amplifier. When the video amplifier consists of direct-coupled stages, as it does in many receivers, d-c reinsertion is not required as the video signal output of the picture second detector stage includes the required d-c component. This is maintained through the video amplifier to the kinescope grid because of the direct coupling. These receivers do not include a d-c restorer stage.

TEST PATTERNS

24-4. A test pattern is a static image broadcast by TV stations in order to help in checking picture quality. This is much more convenient than trying to make adjustments with normal program material, where the objects in the scene are difficult to measure and are generally moving. As an example of a typical test pattern, the one transmitted by Station WNBT in New York is shown in Fig. 24-20.

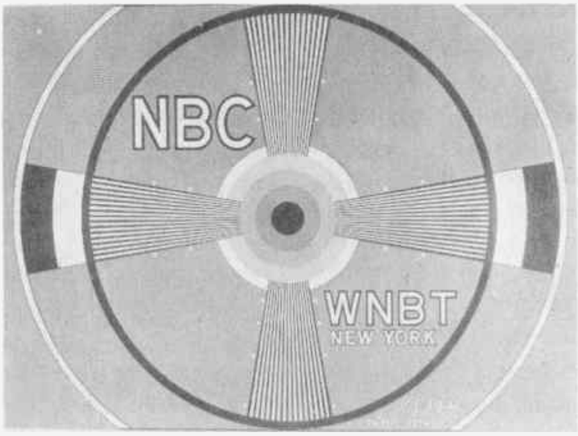

Fig. 24-20

This is the original of the pattern – the object on which the TV camera is focused at the studio. The original pattern is illustrated here so that you can plainly see its construction, consisting of: (a) the gray background, (b) two large outside circles, one black and one white, (c) vertical and side wedges of converging black and white lines, (d) solid black and white arcs at the ends of the two side wedges, (e) five small circles, forming a "bulls-eye" at the center, varying in shade from black to white, (f) the lettering for station identification.

It would be very nice if the TV receiver reproduced so fine a picture, but at present this is not possible. Instead, a normal test pattern on the kinescope looks more like this:

Fig. 24-21

Focus. – The focus can be adjusted to make the converging lines in all four wedges as sharp as possible toward the center of the pattern. Here is an example of a picture with poor focus:

Fig. 24-22

Notice that the lines are indistinct in the vertical and the side wedges. When only one pair of wedges is fuzzy, while the other pair is sharp, the trouble probably is not the focus. Since the focus affects the overall sharpness through the entire picture, it can be set conveniently without the test pattern by adjusting for the sharpest possible scanning lines in the raster. This should preferably be done with a bright raster to provide good focus in the white parts of the picture. Also, the center part of the frame should be watched for best focus, as the outside edges are normally defocused to some extent with deflection.

The Target. – At the center of the test pattern are several concentric circles, ranging from the black "bulls-eye", through three shades of gray to a white outer circle. These represent five equal changes in color value to provide a gray scale that can be used for adjusting brightness and contrast. These controls should be adjusted so that each shade can be distinguished from the others.

What the Large Circles Show. – The diameter of the large white circle at the outside of the pattern is made 4/3 the diameter of the large black circle, in order to help in adjusting for the correct aspect ratio in the picture. This is done by making the white outside circle just touch the sides of the picture mask while the black circle reaches to the top and bottom. By adjusting the vertical and horizontal size controls on the receiver, therefore, the proportions of the picture can be conveniently set for the correct aspect ratio of 4/3.

It is important that the reproduced picture at the receiver be adjusted this way, so that it will have the same proportions as the image televised by the TV camera, which has the standard aspect ratio of 4/3. Otherwise, the objects in the picture would be distorted in shape; the most curvaceous bathing beauty would be seen on the screen as something resembling either the circus fat woman or a human skeleton. Since the transmitter puts out a signal for an image with a 4/3 aspect ratio. that is the proportion needed to produce kinescope bathing beauties with undistorted shapes.

Here is an example of a picture with the wrong aspect ratio:

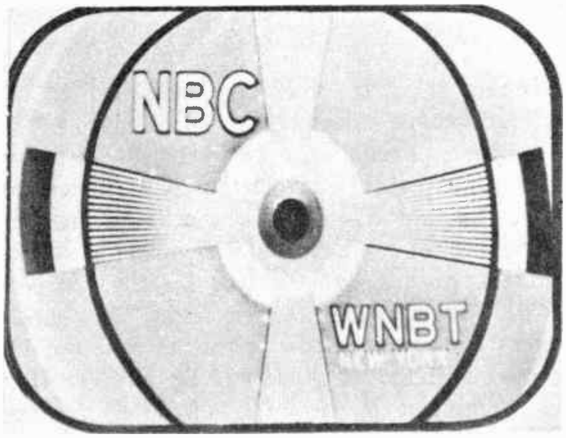

Fig. 24-23

Centering. – It's easy to know when the picture is centered correctly with the test pattern on the screen, by watching the wedges of the pattern. When one of the vertical wedges is cut off more than the other, the picture is off center vertically. With both wedges cut off to the same extent the picture is centered vertically but has too much height. By noting the symmetry of the side wedges, the horizontal centering can be adjusted.

Pairing of Lines. – When the even and odd fields of the scanning raster are not interlaced perfectly, successive scanning lines are paired, either completely or partially, thereby reducing the amount of vertical resolution. The spaces between scanning lines should be thin, but uniform, and almost unnoticeable, except on very close inspection. With pairing of lines, though, the line structure is much more evident, as the spaces between lines are more noticeable.

If loss of interlace occurs, the even or odd set of scanning lines will be displaced up or down. With a slight displacement, the even and odd lines merely overlap slightly. The test pattern would look like this:

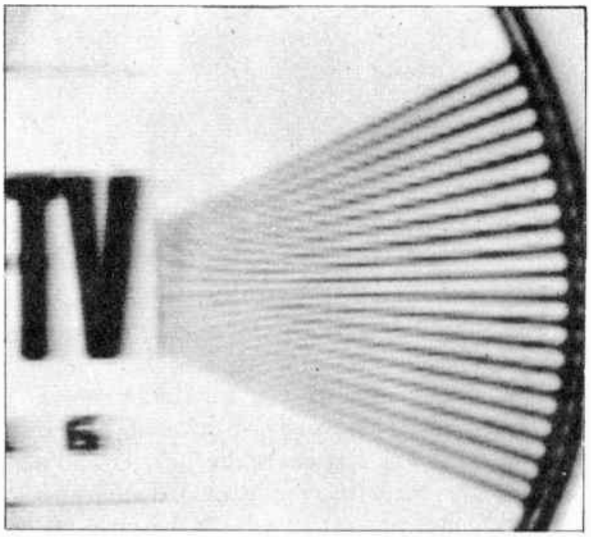

Fig. 24-24

Note that the slanting lines of the horizontal wedges combine in a weaving pattern, which is called a *moire effect.* This is the test pattern indication of poor interlacing.

A quick check of interlacing can be made without the test pattern when the brightness is turned up to make the vertical retrace lines visible. Then any irregularity of their spacing can easily be detected, since these inactive lines are widely separated.

When the loss of interlace is complete, the even or odd fields are displaced the full width of a scanning line, so that the lines are superimposed, leaving relatively wide spaces blank between scanning lines. This defect would be very noticeable, with excessive spacing between lines and the resultant loss of vertical resolution.

Checking Linearity. – The test pattern is very convenient for checking and adjusting the scanning linearity in the TV receiver. With ordinary program material it is difficult to tell when the picture information is crowded or spread out, unless the nonlinear distortion is very severe. When the test pattern is on, though, the circles and wedges provide a convenient reference for linearity.

In the original NBC test pattern the two sides wedges are the same length, and the two vertical wedges are also equal. If the kinescope reproduction shows the top and bottom wedges of unequal length, this indicates poor vertical scanning linearity, with crowding and spreading of the picture information from the top to the bottom of the image. In addition, the circles in the test pattern will not be perfectly round with nonlinear scanning. Here is an example of vertical nonlinearity.

Fig. 24-25

To correct the vertical nonlinearity, the receiver's linearity and height controls, which control the vertical scanning circuits, can normally be adjusted to obtain equal top and bottom wedges in the test pattern. Varying one control usually affects the other, so that both must be adjusted to obtain good linearity with the proper height. The picture may roll vertically during this adjustment, but the vertical hold control can be varied slightly to stop the picture for the desired linearity adjustment.

Incidentally, the rolling effect can be put to good use by adjusting the vertical linearity while watching the bar produced by vertical blanking as it moves from top to bottom of the frame. When there is no test pattern on the air, this is a convenient way to check vertical linearity. Turn the vertical hold control to make the picture roll very slowly so that you can see any changes in the thickness of the bar as it moves through the frame, as illustrated in Fig. 24-26.

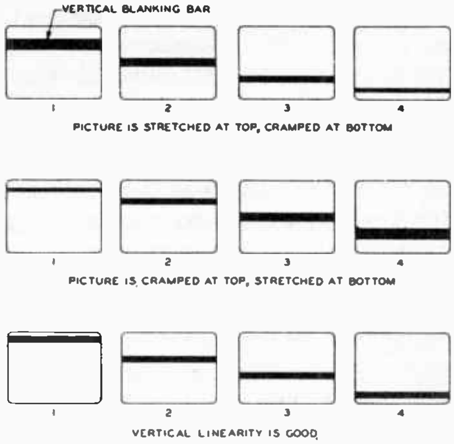

Fig. 24-26

When the vertical scanning is linear the blanking bar remains the same width as it moves through the frame. There is no similar way to check horizontal linearity without the test pattern, because the bar produced by horizontal blanking generally cannot be made to drift across the frame.

When the side wedges are of unequal length, this indicates nonlinearity of the horizontal scanning, with crowding and spreading of the picture information in the horizontal direction. This is shown here:

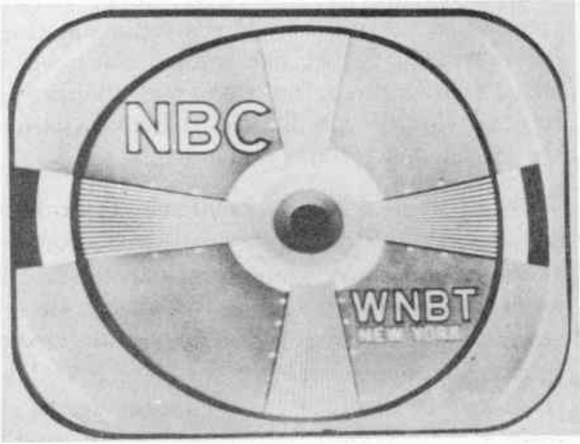

Fig. 24-27

Obtaining equal side wedges with the proper picture width, is a problem of adjusting the horizontal linearity, width, and drive controls, which affect the horizontal scanning circuits.

Measuring Resolution. – Suppose that a televised image consisted of equally spaced, alternate black and white horizontal bars, as shown in Fig. 24-28 on the next page.

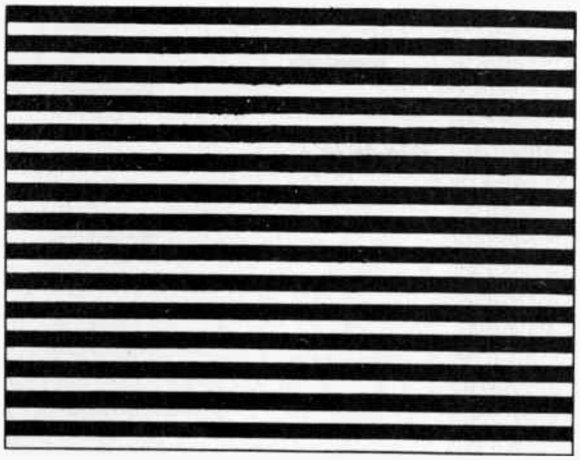

Fig. 24-28

With only 30 bars in this image, 15 black and 15 white, we know that all of them would be clearly shown in the 525 line TV system. But now if we gradually make the bars narrower and closer together, more and more bars will be included between the top and bottom of the picture. As we crowd in more bars, there will eventually come a time when the bars, as seen on the kinescope screen, will no longer be distinct from each other, but will seem to run together. The maximum number of such lines or bars that we can distinguish is defined as the resolution, in lines. As an example, if we can resolve 150 lines, 75 white and 75 black, but find that 160 lines run together to make the individual lines indistinct, the picture has 150-line resolution.

Referring back to Fig. 24-20 now, you can see that the side wedges of the test pattern contains alternate black and white bars that are tapered to become narrower toward the center circles. Similarly, the top and bottom wedges are tapered so that the effect of thinner lines, and more lines per inch, is obtained toward the center of the pattern. As a result, the wedges can be used to measure the resolution of the picture reproduced onthe kinescope, in lines, by noting the narrowest part of the wedge where the individual lines can be resolved. The side wedges measure vertical resolution, in terms of the number of individual lines that can be resolved from the top to the bottom of the picture, while the vertical wedges measure horizontal resolution, as they indicate the ability to show individual details in the horizontal direction.

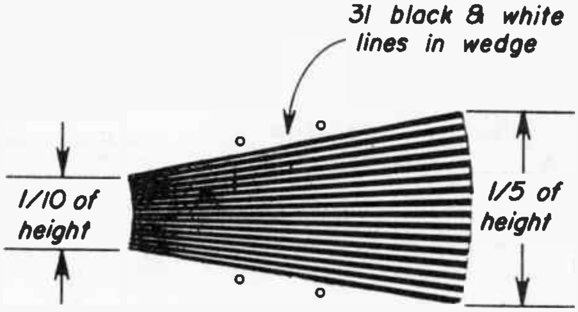

Fig. 24-29

Fig. 24-29 will help in explaining the calibration and use of the horizontal wedges of the test pattern, for measuring the vertical resolution. There are 31 individual lines, 16 black and 15 white, in each wedge of this particular pattern. The right edge of the side wedge, where the individual lines startto taper is approximately 1/5th of the picture height. Considering only this part therefore, 5 × 31, or 155 lines, could be fit into the space between the top and bottom of the picture, which is approximately 150-lines resolution here. At the left side of the wedge, where it is only 1/10 the picture height, the vertical resolution is 31 × 10 or 310 lines. For the intermediate points having white markers along the wedge, one indicates 200-lines resolution because the 31 lines of the wedge here occupy approximately 1/6.5 of the picture height, while the wedge is about 1/8 the total height at the other marker for 250 line resolution.

Referring again to the NBC test pattern in Fig. 24-20 the vertical wedges measure horizontal resolution. This is indicated in two ways. The top wedge is marked in number of lines of resolution from 150 to 325 lines, just like the side wedges, while the bottom wedge indicates the corresponding frequency response of the receiver, in megacycles per second.

As illustrated in Fig. 24-30, the horizontal resolution in number of lines is calculated as for vertical resolution. The width of the wedge is compared to the length H here, which is the same as the height of the picture, or ¾ the picture width. The reason for doing this is to provide a basis of direct comparison between the horizontal and vertical resolution measurements. For example 310-line horizontal resolution is the same as 310-line vertical resolution, although actually 310 × 4/3 or approximately 413 details can fit in the entire picture width for this case.

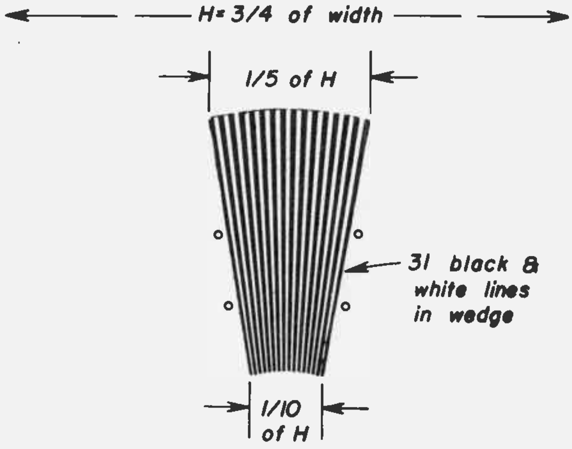

Fig. 24-30

As shown in Fig. 24-30, at the top of the wedge where its width is 1/5th of H, 5 × 31 lines can be resolved, which is approximately 150-line resolution. At the bottom of the wedge the 31 lines occupy 1/10 H, providing 310-line resolution. The intermediate markers indicate 200-line and 300-line resolution for wedge widths that are 1/6.5 and 1/8 of the distance H, respectively.

Referring once more to Fig. 24-20, the bottom wedge of the test pattern is identical with the top one, but instead of number of lines, this wedge is marked in frequency to indicate the receiver's high frequency response. As an example, if the separate lines in the wedge can be resolved at the innermost white marker, the horizontal resolution expressed in bandwidth is 3.5 mc.

The horizontal resolution is generally stated in terms of bandwidth rather than number of lines, because the high frequency response is a limiting factor in obtaining the best horizontal detail. In order to convert horizontal resolution, in lines, to bandwidth in megacycles per second, simply divide by 80. Here are some equivalent values:

BANDWIDTH IN MC.	RES. IN LINES
1.0	80
2.0	160
3.0	240
4.0	320

The receiver should show the individual lines to the ends of the vertical wedges in the NBC pattern, which is approximately 4.0 mc resolution.

Other Test Patterns. – Of course, not all TV stations will use the NBC test pattern. This one has been described in detail here, though, because it is typical, with its grey scale, circles and resolution wedges. You will find that in general other patterns are quite similar and can be interpreted in the same way.

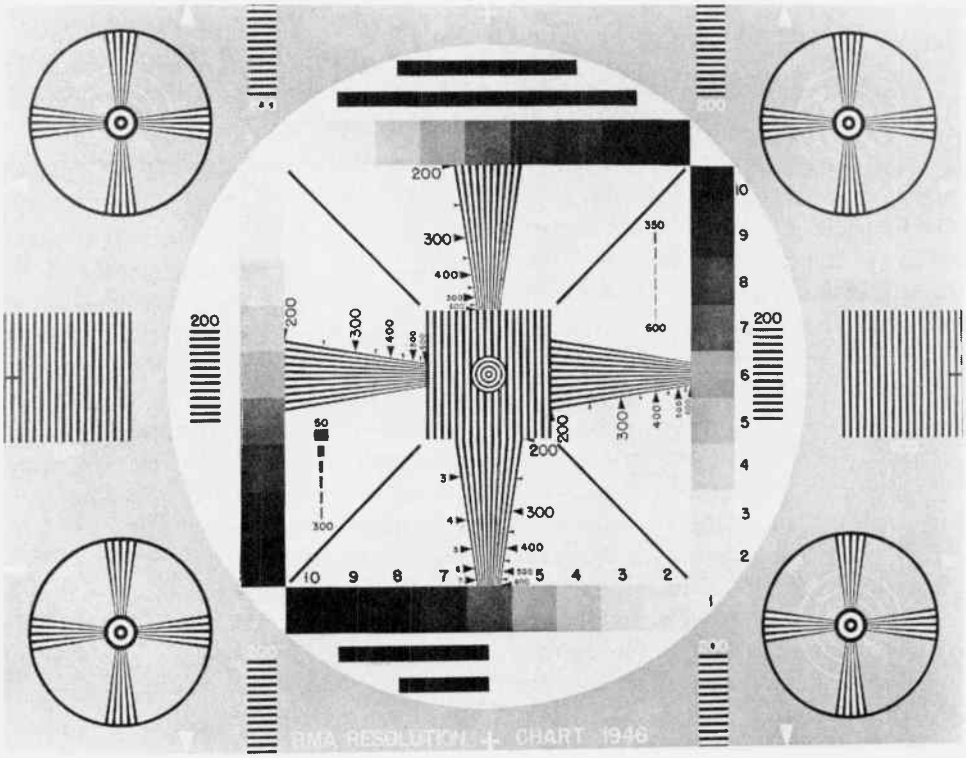

Fig. 24-31

Two additional patterns often used for testing are illustrated by the RMA resolution chart in Fig. 24-31 and the RCA Indian Head Pattern in Fig. 24-32. These have the following additional features not included in the NBC pattern: (1) diagonal lines to check interlacing – the lines should not be jagged; (2) resolution wedges in the corners of the image; (3) the RMA chart has a gray scale with 10 equal steps; (4) the RMA chart has resolution wedges for 7 mc response.

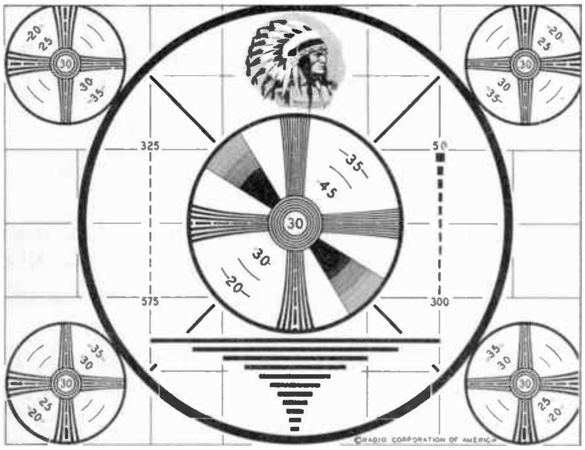

Fig. 24-32

These two patterns are not designed so much for broadcasting, as for testing video equipment at the broadcast station or for laboratory work. The resolution requirements of the RMA pattern, in particular, are greater than the video frequency limit of 4 mc in the standard TV broadcast channel.

The Indian Head pattern is the image used in the monoscope. A monoscope is similar to a camera tube, with a fixed picture on its image plate, to provide a reference source of video test signal for checking equipment. A photo of a typical monoscope is shown here in Fig. 24-33.

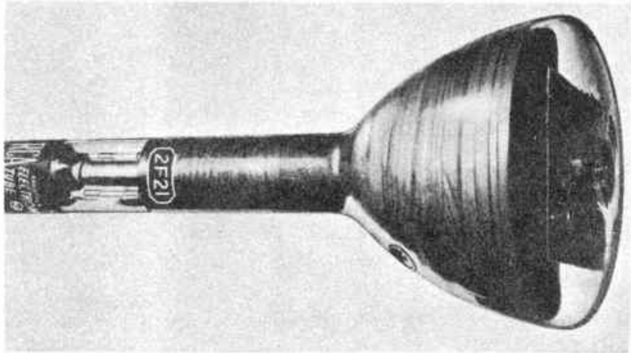

Fig. 24-33

24-5. Video Frequencies. – It is important to realize that the wedges in a test pattern represent a wide range of video signal frequencies. In the NBC pattern, the frequencies produced in scanning across the picture information in the wedges ranges from about 30,000 cps to 1 mc for the side wedges, and 2-4 mc for the vertical wedges. Any picture that may be televised will also contain a wide range of video signals ranging from very low frequencies to 4 mc.

Frequencies in the Vertical Wedges. – The following simple analogy may help in understanding how the vertical wedges represent a wide range of high video signal frequencies:

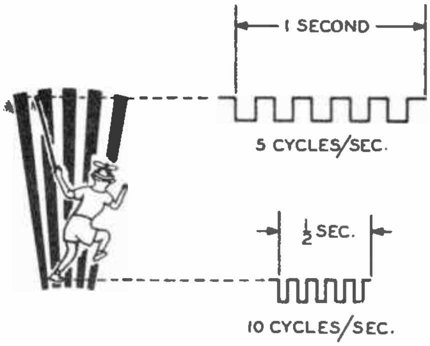

Fig. 24-34

When a boy runs a stick across the pickets in the trellis shown here, he generates an audible signal. The frequency of the sound depends on the speed of the stick and the number of pickets in a given distance.

In a corresponding manner, an electrical square wave signal is generated by the electron beam as it scans across the image of the vertical wedge in the test pattern, as illustrated here:

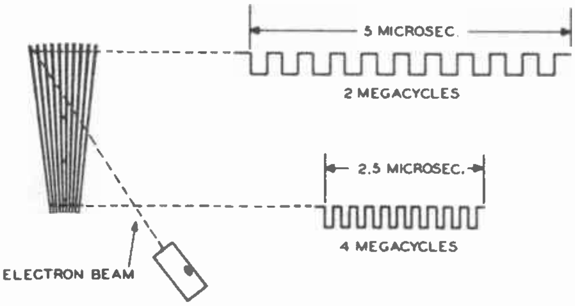

Fig. 24-35

In this particular example, there are 10 black and 10 white lines in the wedge, assuming a white line at the right-hand side of the wedge, so that 10 cycles of signal are produced in scanning across the wedge. At the top of the wedge, the beam will scan the 10 cycles in 5 microseconds, if the wedge here is 1/10.6 of the total picture width. In one microsecond, therefore, the beam scans two cycles, which is a frequency of 2 million cycles (mc) per second. At the bottom of the wedge, which is half the width of the top, the beam scans the 10 cycles in one-half the time of 5 microseconds, which is 2.5 microseconds. In one microsecond, then, the beam scans 4 cycles, which is a frequency of 4 mc. When the beam scans across other points along the wedge, the frequencies generated are between 2 mc and 4 mc.

The conclusion is, therefore, that high video frequencies are needed to reproduce fine horizontal details in the picture. For the NBC test pattern, specifically, 2-4 mc response is needed to reproduce properly the individual lines in the vertical wedges. The ability of the receiver to show this horizontal detail depends on the high frequency response, including the bandwidth characteristics of the r-f, picture i-f, and video amplifier stages.

Frequencies in the Side Wedges. – Although it is not customary to indicate vertical resolution in terms of frequency response, it is interesting to note that the side wedges represent relatively low video signal frequencies. If the center line in the side wedge extends about ¼th of the complete time for one horizontal scanning line, this is equivalent to ½ cycle of a 30 kc square wave signal. The scanning beam crosses the other lines in the side wedge at various angles, equivalent to a maximum frequency of about one megacycle. These video frequencies, roughly 30 kc to 1 mc for the side wedges, are much lower than the 2-4 mc range required for the vertical wedges.

As a result, the side wedges can be considered to indicate the low frequency response of the receiver, compared to the high frequency response shown by the vertical wedges. The intensity or degree of black and white in the horizontal wedges, in comparison to the vertical wedges, is therefore dependent on the frequency response of the receiver. If the low frequency response is poor, the side wedges may be gray, when the vertical wedges are black. When the high frequency response is worse than the low frequency response, the vertical wedges appear gray, relative to the black in the side wedges. This is illustrated here for a case of side wedges much weaker than the vertical wedges because of poor low frequency response.

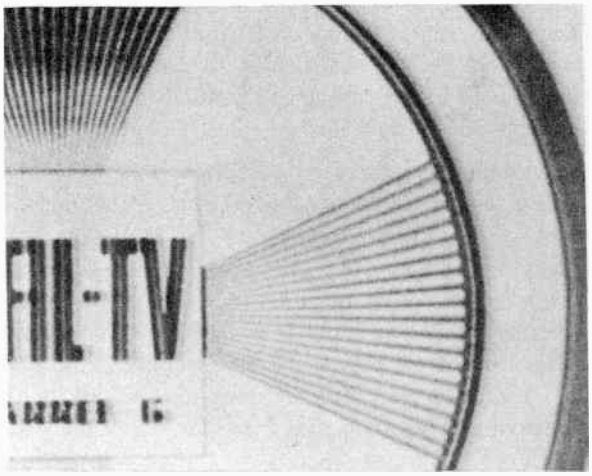

Fig. 24-36

Video Frequency Bandwidth. – We have already seen that the high video signal frequencies correspond to small horizontal details in the picture. Because of the restriction of the standard transmission channel, the amount of horizontal detail is limited to what can be obtained with 4 mc response, which is equivalent to 320-line resolution in the horizontal direction. This is the best horizontal definition possible in the reproduced picture, with 4 mc bandwidth for the receiver response. However, the high frequency detail can be worse than 4 mc resolution, as illustrated by the test pattern here:

Fig. 24-37

Notice the fuzziness in the narrow part of the vertical wedge, making it impossible to resolve the individual lines past the point of 250-line resolution, approximately. Note also that the side wedge is "stronger" than the vertical wedge, because of the reduced high frequency response. In a conventional picture with normal program material, this deficiency of horizontal resolution would be evident as a loss of detail, reducing the clarity of the picture, especially in the edges that outline figures in the image.

Another important question concerning the video frequency range is the type of picture information that corresponds to very low frequencies. To analyze this problem, imagine that we have an all-white frame. The camera signal obtained in scanning this image will remain white for almost the entire field scanning interval of 1/60 second before becoming black with blanking. This can be considered as one-half cycle of a 30 cps square wave signal since the half-cycle is 1/60 second.

This frequency of 30 cps can be considered as the lower limit of the range of video frequencies, providing a band of 30 cps to 4 mc. In general, the low video frequencies correspond to picture information scanned in the vertical direction, because the vertical scanning speed is slow compared to horizontal scanning. Also, large areas of black or white information in the picture produce relatively low frequencies.

The effect of poor low frequency response in the picture i-f or video amplifiers of the receiver is illustrated in Fig. 24-36. Notice the "weak" side wedges and the variations of shading in the relatively large station call letters,

There are video frequencies lower than 30 cps, but these are usually considered as a change in the d-c average brightness level, rather than a component of the a-c video signal. To see how such low frequency components of the video signal are produced, suppose that the stage lights in a fixed scene are gradually dimmed and then put on again during an interval of one second. This would correspond to a signal variation having a period of 1 second, which is a frequency of one cycle per second. Such a slow signal variation, however, is more conveniently considered as a change in the average brightness of the scene, which is a variation of the d-c component of the a-c video signal.

To summarize, the range of a-c video signal frequencies is about 30 cps to 4 mc. The lower frequencies correspond to picture information scanned in the vertical direction, and large areas of black or white in the image; small horizontal details and sharp outlines correspond to the highest video signal frequencies. Those frequencies lower than 30 cps represent slow changes in background that can be considered as changes in the d-c level of the video signal.

Harmonic Frequencies. – In discussing the video frequencies, we have given examples of square-wave signal variations that correspond to the original picture information. It is important to realize, though, that it will not always be possible to reproduce the picture details exactly corresponding to those square wave signals. To illustrate this idea let us take the example of several bars in the image corresponding to a 4 mc square wave video signal, as shown here:

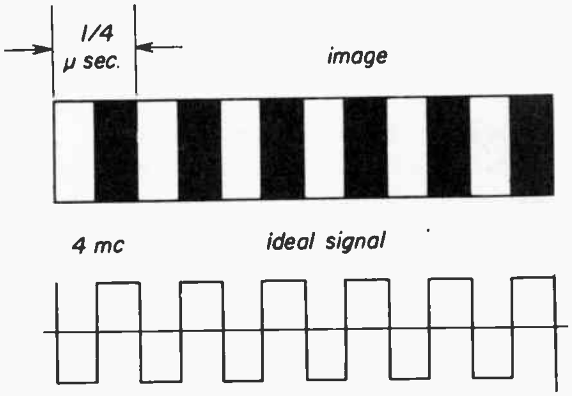

Fig. 24-38

Now, since the TV system is limited to 4 mc response, which means a 4 mc sine wave, instead of the ideal case shown in Fig. 24-38, the actual signal and its corresponding picture information will be more like this:

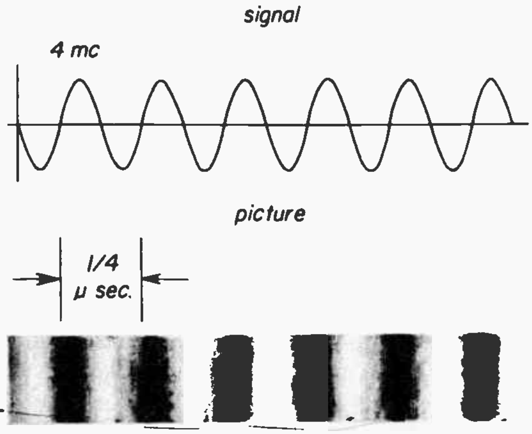

Fig. 24-39

The reason why the 4 mc square wave signal is reproduced in the TV system as a 4 mc sine wave is the fact that any square wave consists of a sine wave having the same fundamental frequency, plus many higher harmonic frequencies. In order to reproduce a 4 mc square wave, therefore, the TV system would need sine wave response much higher than 4 mc – possibly up to 44 mc for a close approximation to the 4 mc square wave. This is not possible with the present TV standards, which limit the highest video modulating frequency in the transmission channel to approximately a 4 mc sine wave.

Any waveform that is not a sine wave, such as a square pulse or sawtooth wave, can be resolved into components including a sine wave with the same repetition rate and fundamental frequency as the original wave, plus higher harmonic frequencies. A square wave consists of a sine wave at the fundamental frequency, and an infinite number of harmonics that are exactly odd multiple frequencies of the fundamental. For a 4 mc square wave, as an example, this includes a 4 mc sine wave fundamental, the third harmonic of 12 mc, fifth harmonic of 20 mc, etc. In general, nonsinusoidal waves include even and odd harmonics, but a square wave is a special case where the amplitude of all the even harmonics is zero. The more complex the signal, or the sharper its peaks and valleys, the greater is its number of harmonics.

The more harmonics that the system transmits, the more accurately will the shape of the square wave be reproduced. Conversely, the lower the cutoff frequency of the system, the more harmonics that may be lost, which has the effect of rounding off the corners of the square wave. If all frequencies above the fundamental are cut off, what comes out is a sine wave at the fundamental frequency, instead of the square wave.

The idea of how a sinusoidal wave contains harmonic frequencies can be understood a little better by remembering how the graph of a square wave is built up from its fundamental and harmonics. This is described on pages 33 and 34 of Lesson 17, to which you can refer for reviewing this principle of harmonic components.

Harmonics in the Composite Video Signal. – The composite video signal with its camera signal variations, blanking and sync pulses, is a complex signal containing many fundamental and harmonic frequency components. The blanking and sync are sharp square pulses, requiring a large number of harmonics for proper reproduction. The camera signal variations representing details of picture information, with the sharp changes in amplitude required for the edges of figures in the picture, all require sufficient response for the harmonics of the fundamental frequency of the signal variation in order to provide faithful reproduction.

Every component of the television system, from the camera tube to the kinescope, must be able to pass properly the video frequency band of 30 cps to 4 mc, which includes fundamental signal variations and their harmonic frequencies. Otherwise, the sync and blanking pulses, and the signal variations corresponding to the desired picture information will not be reproduced properly. The entire TV system, including the camera tube, transmitter, transmission channel, and the r-f, i-f and video stages in the receiver, can be regarded as a low pass filter of many stages. Each element in the system must pass the required band of frequencies, since the weakest link in the chain can be the limiting factor in obtaining a good reproduction of the picture.

Frequency Distortion. – When a circuit does not pass all the frequency components of the input signal equally well, this is called frequency distortion. The different frequency components of the video signal, whether they are fundamental or harmonic frequencies should not be distorted because they represent the desired picture information. Naturally, if some frequencies are amplified more than others, this means that the amplified output will not be a faithful reproduction of the input.

Frequency distortion is generally a problem in connection with amplifying the very low end and the very high end of the wide video frequency range of 30 cps to 4 mc. When the high video frequencies are attenuated this corresponds to a loss of the fine horizontal detail, as shown in Fig. 24-37. When the very low frequencies are not amplified properly, large areas in the picture are not reproduced faithfully, as shown in Fig. 24-36, with a smearing effect usually noticeable because of phase distortion in addition to the frequency distortion.

Phase Distortion. – You will remember that many circuits, including amplifiers, cause a phase shift of the output with respect to the input signal. This in itself is not necessarily a distortion of the signal, but if the shift in phase angle is not proportional to frequency, there will be phase distortion. The reason why the phase angle should be proportional to frequency is the fact that this means all the signal frequencies will then be delayed by the same amount of time, producing an output that is a duplicate of the input.

Here is an example to illustrate how a phase angle shift corresponds to time delay. Assume that a 100 cps wave has a lagging phase angle of 90°, which is ¼ of a complete cycle. The time for one cycle of the 100 cps wave is 1/100 sec. therefore. A lag of ¼ cycle corresponds to a time delay of 1/4 × 1/100 sec., or 1/400 sec. If a 200 cps wave, which is a frequency twice 100 cps, has a lagging phase angle of twice 90°, or 180°, this represents the same time delay of 1/400 sec. This is calculated at 1/2 × 1/200 sec., or 1/400 sec.

Phase Distortion and the Picture Information. – Suppose that for a part of a scanning line, the waveshape of the video signal consists of a fundamental and third harmonic frequency like this:

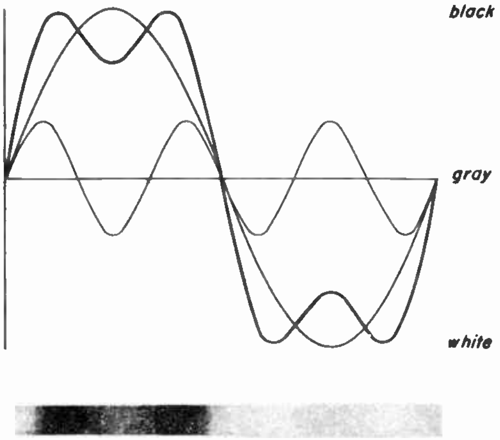

Fig. 24-40

This shows the two components separately, and their sum as the darker line, which is the resultant video signal corresponding to the desired information. Notice the distribution of black information at the left side of the line, and white on the right.

Now suppose that an amplifier shifts the third harmonic frequency component by 90°, while there is no shift for the fundamental, which is a non-linear shift in phase angle and non-uniform time delay for the two components. The resultant distortion of the waveshape and the picture information it represents is shown in Fig .24-41.

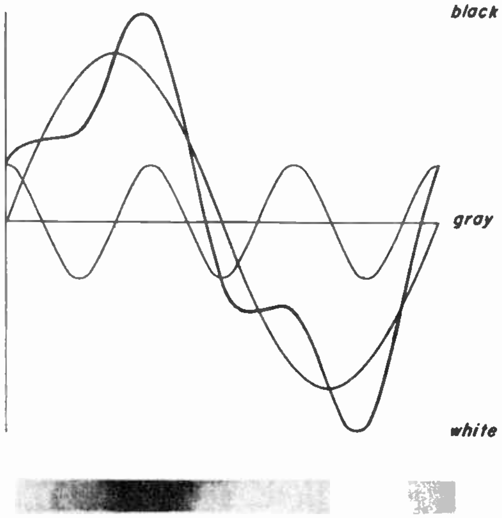

Fig. 24-41

Notice that one of the maximum black peaks, and one for white also, are lost. Furthermore, the position of the two remaining black and white peaks has been shifted, slightly to the left. If you look carefully at Fig. 24-41 you can see that the black area has a leading and a trailing smear, corresponding to the new amplitude values in the distorted signal, just before and after the black peak.

It appears, then, that the nonuniform time delay due to phase distortion has the effect of putting picture information in the wrong places in the picture reproduction. Since the picture elements are reproduced in sequential order, and the lines are scanned successively, a shift in time corresponds to a change of distance in the reproduced image. This is why the phase angle response of the video signal amplifiers in the TV receiver is so important in obtaining a good, clear picture.

TELEVISION CARRIER FREQUENCIES

24-6. The picture information is transmitted to the receiver by varying the amplitude of a high frequency carrier wave. As shown below, the carrier variations in amplitude provide an envelope that corresponds to the composite video signal.

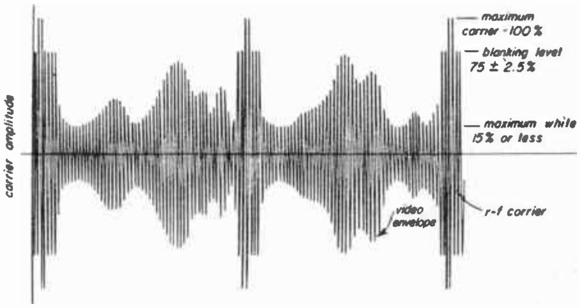

Fig. 24-42

Negative Transmission. – Notice that maximum amplitude of the carrier is produced by the tip of sync, and minimum carrier amplitudes correspond to white picture information in the composite video signal. This method of modulating the picture carrier, where the carrier amplitude is reduced for white picture information is called *negative polarity of transmission*, or simply *negative transmission*. All commercial television broadcast stations follow the FCC standard, so that a television receiver can be tuned to any station and receive the video signal in the same polarity.

The polarity of transmission depends upon the polarity of the video signal modulating the picture carrier at the transmitter, which is chosen to make the sync pulses produce maximum carrier output from the modulated r-f amplifier. The modulated picture carrier signal then has the standard characteristic of negative transmission. This refers only to the modulated picture carrier, though. The composite video signal obtained in the receiver by detecting the modulated carrier can have either negative or positive polarity with respect to the chassis ground, depending on the detector circuit. Furthermore, the polarity of the composite video signal can be reversed in the video amplifier, since the output of each stage is an inverted replica of the input signal. The composite video signal coupled to the kinescope grid, however, will have the polarity required to make the black level voltage drive the instantaneous grid voltage to cut off, while the white parts of the signal vary the voltage in the positive direction, to reproduce the image with the correct picture phase.

Comparison of Negative and Positive Transmission. – The arbitrary nature of the modulation polarity can be seen from the fact that in France and England positive transmission is used. In this type of picture signal, the whitest parts of the picture produce maximum carrier amplitude, while the tip of sync is the lowest amplitude of the carrier wave. Since various countries use a different polarity of modulation, it is apparent that there must be factors favoring both methods.

The primary advantage for positive transmission is that ignition noise produces less interference with synchronization. This is due to the fact that in a positive transmission system the carrier amplitude is usually high with white picture information at the time preceding the synchronizing pulses, when the noise pulses can easily interfere with synchronization. However, the automatic frequency control circuits now generally used for the horizontal deflection oscillator in the receivers are not sensitive to noise, so that this is not a critical factor, In fact, with automatic synchronization, the picture generally holds together on weak signals well enough to sync the picture when the image is actually too snowy to be usable.

On the other hand, negative transmission has several important advantages. Ignition-noise interference is less noticeable in the picture when negative transmission is used because an increase in carrier amplitude, which is generally the effect caused by the interference makes the picture darker. Also, the constant pedestal level at 75% of the peak carrier level in the negative transmission system can serve as a source of control voltage for a-g-c in the receiver more conveniently. The final, and probably most important advantage, is the increased transmitter efficiency when negative transmission is used. The reason for the greater efficiency is the fact that the carrier amplitude is generally low with white picture information and less power is radiated for a large part of the modulation cycle. In addition, maximum transmitter output is obtained for the tip of the sync pulses, where distortion is not as much a problem as it would be for white picture information. Because of these factors, negative polarity of transmission is the standard in this country. All commercial TV broadcast stations transmit an AM picture carrier signal having the characteristics shown in Fig. 24-42.

The Modulation Envelope. – Referring to Fig. 24-42 again, you can see that the amplitude variations of the modulated carrier wave provide an *envelope* corresponding to the modulating composite video signal. It is important to realize that the so-called modulation envelope does not actually exist as a part of the carrier wave, but is merely an imaginary line we could draw through the peaks of all the r-f cycles to describe their amplitude variations. It would really be two lines, one through the negative peaks and the other through the positive peaks of the r-f cycles.

The envelope is symmetrical and is the same for both the negative and positive halves of the r-f carrier wave. Because of this symmetry, the envelope has approximately equal positive and negative values at the same time, which accounts for the fact that the envelope is not a component of the carrier wave. Effectively, then, the high frequency r-f wave acts as a carrier for the lower frequency modulating signal, just as we could say a knife is the carrier of sharpness.

At the receiver, the detector rectifies the modulated r-f carrier. Output is obtained for only the positive or negative half of the r-f waves, according to the rectifier circuit used, providing signal that *does* include the modulation envelope as a part of the rectified output because the envelope is no longer symmetrical. That is why a modulated r-f carrier wave must be detected to recover the desired signal. Either polarity of the r-f signal provides the same envelope of amplitude variations.

Sidebands. – The next problem is to see how sideband frequencies are related to an amplitude modulated carrier, as this will clarify the question of the bandwidth requirements for the modulated picture signal. You may ask how additional sideband frequencies can be produced in amplitude modulation. The fact of the matter is, though, that additional frequencies are generated when the carrier amplitude is changed by modulation. This can be proved either experimentally or mathematically but we shall content ourselves with the fact itself. After all, each individual cycle of the r-f carrier must be altered by modulation as the amplitude is varied by the modulating voltage. There is a change in the rate of increase or decrease for each cycle of the r-f wave, as a result, which is equivalent to adding new frequencies to the carrier signal. Since the changes are produced by the modulating voltage, the new frequencies differ from the carrier frequency by an amount equal to the frequency of the modulating signal.

The relation of the carrier to the side frequencies generated by modulation is illustrated in Fig. 24-43, which for the sake of simplicity shows a signal with a single frequency of 5 kc as the modulating voltage for a 1 mc carrier.

The amplitude modulated 1 mc carrier wave actually consists of the unmodulated carrier wave, plus an *upper side frequency* of 1.005 mc and a *lower side frequency* of 0.995 mc, each side frequency differing from the 1 mc carrier frequency by the 5 kc audio modulating frequency. The sum of these three components is identical with the amplitude modulated carrier wave – a fact you could establish, if you have the patience, by adding the instantaneous values of three components graphically point-by-point.

As another example of side frequencies, let's assume that a 4 mc sine wave signal modulates a 100 mc carrier. In this case the side frequencies produced will be 104 mc and 96 mc, in addition to the 100 mc carrier. For a video modulating frequency of 0.5 mc, the side frequencies will be 100.5 mc and 99.5 mc.

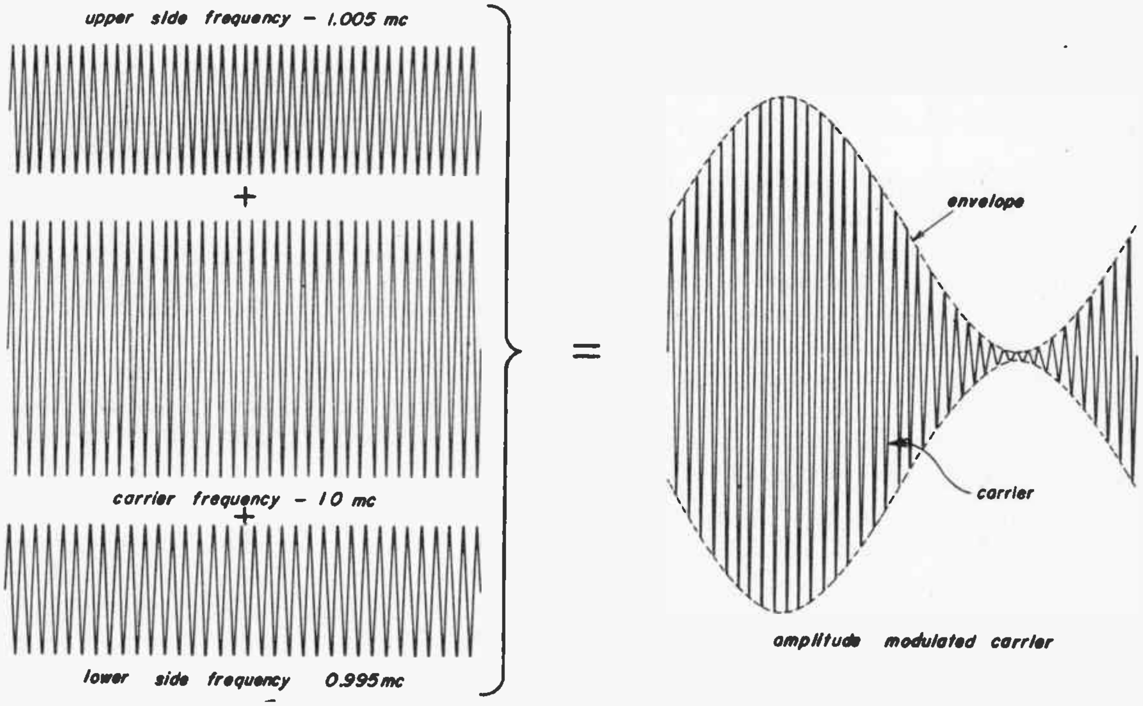

Fig. 24-43

If there is still any question about whether the modulated carrier signal is the carrier with its amplitude variations, as shown at the right in Fig. 24-43, or is the unmodulated carrier plus the pair of side frequencies shown at the left, the answer is that *the two signals are the same.* It's like deciding whether five is four plus one, or three plus two. Both are merely different ways of expressing the same thing. However, the sideband concept indicates the band of frequencies needed to accommodate the AM carrier wave.

For each of these examples, using a single modulating frequency, you should note that there is just the one pair of side frequencies. There is no continuous band of side frequencies, unless a band of frequencies is used for modulation. When the modulating voltage is a complex signal, like typical audio or video signal, it contains a wide band of frequency components, each producing a pair of side frequencies. With a complex modulating signal, therefore, the result is a band of side frequencies, called the *sidebands.* The band including the side frequencies higher than the carrier frequency is the *upper sideband,* while the *lower sideband* contains the lower side frequencies. This is illustrated here for the case of a band of frequencies from 0 cps to 5 kc modulating a 1 mc carrier.

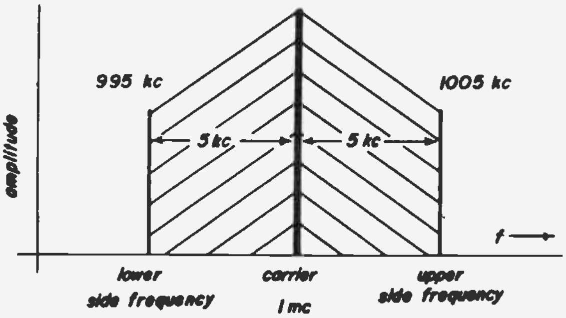

Fig. 24-44

There is a big difference between the sidebands and the envelope of the modulated carrier signal. The envelope is an imaginary duplicate of the modulating voltage, which may be the audio in a sound system or the composite video in the picture signal. The envelope frequencies, which are the modulation frequencies, are much lower than the carrier frequency, and are not present in the modulated wave.

The sidebands consist of r-f side frequencies of constant amplitude that are close to the carrier frequency, and are actually components of the modulated wave. Adding the two sidebands to the unmodulated carrier, however, provides the modulated carrier with its envelope of amplitude variations.

Energy of Sidebands. —Now we can see that without the sideband components there is no amplitude modulation, and vice versa. If the transmission channel, or the receiver bandwidth, accomodates only the carrier frequency, the intelligence in the modulated signal is not received. for all of the modulating information is contained in the sidebands. There is no intelligence in the unmodulated carrier itself.

Notice that the side frequencies are shown in Fig. 24-43 with one-half the amplitude of the carrier. This is done because with 100% modulation the amplitude of each side frequency component is half the unmodulated carrier amplitude. All the energy of the modulating signal is in the sidebands, with each sideband having one-half the modulation power. Because the upper and lower side frequencies differ from the carrier frequency by the same amount, and each has the same amplitude, each contains the same information about the modulating signal.

Single Sideband Transmission. —It is possible, therefore, to use only one of the sidebands, with the carrier, to transmit the modulating information. Such a system is called *single sideband transmission* . When only one sideband is added to the unmodulated carrier wave, the result is an amplitude modulated carrier similar to what is produced with double sideband transmission, but with only one-half the effective modulation, approximately. Both sidebands must be generated by the modulation process but in practice one sideband can be filtered out before transmission.

This system of single sideband transmission can be, and is, used to transmit intelligence, since the modulating voltage is still present as an amplitude variation of the carrier. Its advantage is that only half the normal bandwidth is required; the disadvantage is that half the energy of the modulating signal is wasted.

In single sideband transmission, the envelope is still symmetrical above and below the carrier. Either the positive or negative half can be used for the detector to obtain the desired signal, just as in conventional double sideband transmission. Remember this process of single sideband transmission because it will be helpful in understanding the arrangement used for transmitting in a 6 mc channel the picture signal modulated with composite video signal having frequency components up to 4 mc.

Television Channels. – Because of the need for a wide transmission channel to accomodate the sidebands produced by modulation, the picture carrier frequencies are in the VHF range of 30-300 mc. The bands of 54-88 mc and 174-216 mc are allocated by the FCC to include commercial television broadcast stations. As shown in the table below, there are five channels designated as Channels 2 to 6 in the low band of 54-88 mc, and seven channels designated as channels 7 to 13 in the high band from 174-216 mc. There used to be a channel 1 (44-50 mc) allocated for TV broadcasting, but this has been assigned to other services, so that only twelve of the original thirteen channels are in use now. Rather than change all the channel numbers, the old numbers were retained, starting with Channel 2.

TABLE 1 TV CHANNELS

low - band									*high - band*						
channels									*channels*						
1	*2*	*3*	*4*		*5*	*6*			*7*	*8*	*9*	*10*	*11*	*12*	*13*
	54 - 60 mc	*60 - 66 mc*	*66 - 72 mc*		*76 - 82 mc*	*82 - 88 mc*	*FM band 88 - 108 mc*		*174 - 180 mc*	*180 - 186 mc*	*186 - 192 mc*	*192 - 198 mc*	*198 - 204 mc*	*204 - 210 mc*	*210 - 216 mc*

of population and geographical location. For instance, there may be only one channel in a community like Altoona, Pa., four in a city the size of El Paso, Texas, up to a maximum of seven in a densely populated section such as the Greater New York area, Chicago, or Los Angeles.

Channels that are adjacent in frequency, such as Channels 2 and 3, are not assigned to the same city but are separated by a minimum distance of about 100 miles between stations, to minimize adjacent channel interference. Those channels adjacent in number but not in frequency, like Channels 4 and 5, or 6 and 7, can be assigned to the same city, however, as there is little danger of interference between stations in such a case.

There is a skip in frequency between some of the TV channels because other radio services need their share of the radio frequency spectrum. The 72-76 mc band is allocated for non-government fixed and mobile equipment such as aeronautical markers, police and fire radio services. The 88-108 mc band is allocated to FM broadcast stations. Frequencies from 108 mc to 174 mc are used for aeronautical navigation and various government services.

Twelve channels are not enough for the expanding television broadcast service and the FCC, therefore, has proposed 42 additional channels, in the UHF band, starting either at 470 or 500 mc. These would be standard 6 mc channels for black-and-white pictures transmitted by commercial TV stations. Many field tests have been made in this frequency spectrum formerly allocated to experimental television broadcasting, and it appears likely that this band will be used for more TV channels, although there are additional problems in field strength and ghosts at these Ultra-High-Frequencies. More about this in Sec. 34-9.

Each station must secure a license from the FCC before starting operation in a specified channel. Only a limited number of stations are licensed in any one area, the FCC following certain more or less definite rules in making its allocations. Channels are assigned on a basis

24-7. The Standard Television Channels. – The way that the assigned channel is used by a TV broadcast station is illustrated by the response curve shown here:

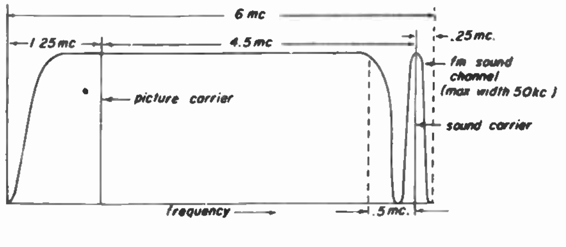

Fig. 24-45

This is not a picture of the transmitted signal, but only indicates the relative output of the transmitter for the different frequencies in the 6 mc band. Notice that provision is made for transmitting both the picture signal and the associated sound signal in the common 6 mc channel.

Referring to Fig. 24-45, it shows that the picture carrier frequency is 1.25 mc above the low frequency end of the channel, while the sound carrier frequency is 0.25 mc below the high end of the channel. Every TV channel has this standard construction with a constant difference of 4.5 mc between the two carrier frequencies. This 4.5 mc separation is accurate because the frequency of the transmitted carrier, either picture or sound, is held within the close tolerance of ± 0.002%.

As examples of the standard carrier frequencies, for Channel 4 (66-72 mc), the picture carrier is 1.25 mc above 66 mc, which is 67.25 mc, while the sound carrier is 71.75 mc; for Channel 13 (210-216 mc) the picture carrier is 211.25 mc and the sound carrier is 215.75 mc. This structure applies to all TV channels, so that if you know the frequencies allocation of the channel you can always figure out its picture and sound carrier frequencies.

Frequency modulation is used to transmit the associated sound signal. The details of FM will be discussed in a later Lesson, but for now we can point out that the band of frequencies needed for the television FM sound signal is 50 kc. This is only a small part of the 6 mc TV channels, most of which is occupied by the sidebands produced by video modulation of the picture carrier.

Vestigial Sideband Transmission. – The modulated picture carrier is not transmitted as a normal double sideband signal. Instead, a part of the lower sideband is filtered out, giving the effect of single sideband transmission for the higher video modulating frequencies, while double sideband transmission is used for the lower video frequencies. This is done in order to reduce the bandwidth required for the transmitted picture signal.

Referring to Fig. 24-45 again, it is shown that there is room in the 6 mc channel for upper sideband frequencies that extend as much as 4 mc above the picture carrier frequency. This means that for the upper sideband video modulating frequencies as high as 4 mc can be transmitted in the channel. For the lower sideband, however, below the picture carrier the low frequency end of the channel is reached and we begin to get into the lower adjacent channel. It is necessary, therefore, to filter out most of the lower sideband in order to keep the signal within the 6 mc channel. This must be done for the lower side frequencies produced by video modulating frequencies higher than 1.25 mc.

To make this more specific, let's take a couple of numerical examples. Suppose that there is a single video frequency of 3 mc modulating the picture carrier of Channel 4, which is 67.25 mc. The upper side frequency produced in 70.25 mc, which is well within the range of the channel allocation. The lower side frequency produced is 64.25 mc. This is outside the assigned channel and has to be eliminated from the transmitted signal. To take another example, suppose that the video modulating frequency is 0.5 mc. In this case, the upper and lower side frequencies of 67.75 mc and 66.75 mc are both within the assigned channel and will be transmitted.

This method of transmitting the picture signal is called *vestigial sideband*, or *semi-single sideband* transmission because it is neither conventional double sideband, nor completely single sideband transmission, with only a vestige, or small part of the lower sideband transmitted.

The advantage of using vestigial sideband transmission for the picture signal is the fact that video modulating frequencies as high as 4 mc can be used without exceeding the channel limitations. If conventional double sideband transmission were used the highest video modulating frequency would be limited to less than 3 mc, with a corresponding loss of horizontal detail in the reproduced picture at the receiver. Even with the vestigial sideband transmission though, the highest video modulating frequency that can be transmitted in the 6 mc channel to the receiver is approximately 4 mc because the sideband frequencies must be within the channel and must not interfere with the sound signal. It is important to realize that the restriction of the 6 mc standard channel is the only reason for the 4 mc limitation on high video frequencies and the corresponding horizontal detail.

It might seem that single sideband transmission should be used completely, putting the picture carrier at the lower edge of the channel and using practically the entire 6 mc width for the upper side frequencies. This is not feasible, though, because of practical difficulties. The lower side frequencies that are outside the channel can be removed at the transmitter by a vestigial sideband filter that rejects the undesired frequencies. Alternatively, the transmitter can be tuned to eliminate the frequencies not wanted. In any case, it is difficult to remove the undesired lower side frequencies without eliminating the picture carrier itself, or producing excessive phase distortion of the picture carrier. As a result, if single sideband transmission were used completely there would be excessive phase distortion of the picture signal. The practical compromise, therefore, is to use vestigial sideband transmission, where the picture carrier itself and the sideband frequencies close to it are undistrubed and transmitted as a normal double sideband signal, while the lower side frequencies that differ from the carrier by 1.25 mc or more are filtered out.

Compensating For the Vestigial Sideband Transmission. – Speaking about single sideband transmission a few paragraphs back we said that when only one side frequency is transmitted along with the carrier wave the result is an amplitude-modulated signal having only 50% modulation, compared to 100% modulation with both sidebands. Considering the transmitted picture signal now, both sidebands are transmitted for video modulating frequencies up to about one megacycle while only one sideband is transmitted for higher video frequencies. As a result, there is a higher percentage of modulation for the lower video modulating frequencies because these are transmitted as normal double sideband signals.

This is effectively a boost for the low video frequencies. It constitutes distortion of the video modulation, since the low frequencies are given disproportionately greater response – not because of picture information, but simply because of the method of transmission.

This frequency distortion is corrected in the television receiver, however. You will see later in the course that in aligning the picture i-f amplifier stages of the receiver, the picture carrier intermediate frequency is made to fall on the sloping side of the overall i-f response curve about half way up, as shown in Fig. 24-46.

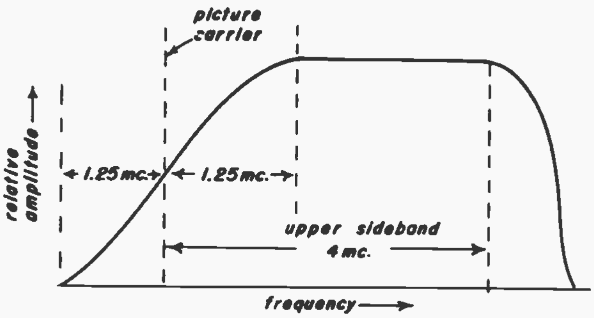

Fig. 24-46

The receiver's response is about 50% for the picture carrier; it is less for the lower side frequencies, approaching zero at 1.25 mc above the carrier. Remembering now that half the energy of any particular video modulating frequency is in each side frequency, we can see that the same effect has been obtained as though only the upper sideband were transmitted, and no more. It works like this. Taking a video frequency of 0.5 mc as an example, the response for the lower side frequency, 0.5 mc below the carrier, is about 25%. The receiver response for the upper side frequency is about 75%. Adding the two together, we have the same energy for this video frequency as though the receiver accepted 100% of the video energy in one sideband only, as it does for the higher video frequencies.

As a result, the receiver accepts the same proportion of energy from each frequency component of the video modulating signal, and the frequency distortion due to vestigial sideband transmission is corrected.

COLOR TELEVISION

24-8. – The Federal Communications Commission (F.C.C.) has authorized for commercial broadcasting a system of color TV which is usually referred to as the "mechanical system". The one other color TV system that has received the most attention is an all-electronic system. We shall outline here the main features of these two systems; the details of color television will be explained in a later lesson.

Mechanical Color TV. – The so-called mechanical system is, in reality, a combination of our present electronic black and white television, plus a mechanically rotating wheel or drum. This wheel is a thin round disc containing transparent color sections, as shown in Fig. 24-47.

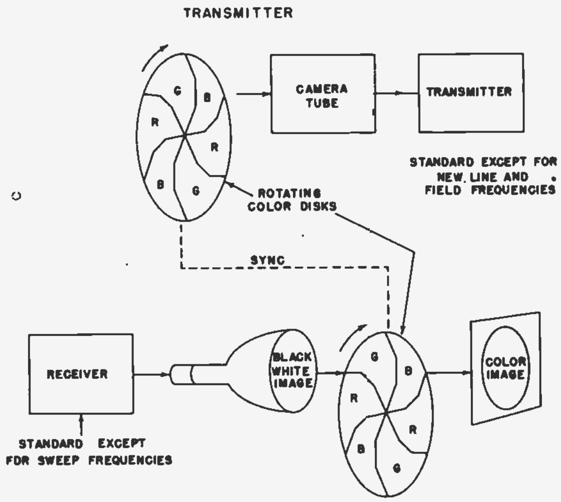

Fig. 24-47

The colors are the three primaries – *red, blue and green*. The wheel is rotated in front of the kinescope screen, between the screen and the person viewing it, to produce the required color in the picture at the receiver. A similar color wheel is rotated in front of the transmitter's camera tube.

The movements of the transmitter's color wheel and the receiver's wheel are synchronized so that when the red section is in front of the camera tube, the corresponding color, red, must be in front of the kinescope. The same is true for the blue and green colors.

When the red filter section is before the camera tube, it allows only light from the red objects in the picture to produce signal output. At this same time, the red filter is before the kinescope screen, and any reproduced objects will appear red. When the blue filter is before the camera tube, only blue objects can reach the tube. The blue filter in front of the kinescope screen will now cause any reproduced objects to appear blue. The same is true for green.

All colors are a combination of one or more of the primaries. Any secondary or combination color, which contains some blue and some green, for instance, will first get its blue component through to the camera tube, and then later, its green component through. On the kinescope screen it will first appear as blue and then as green. Since the color wheel rotates fast enough, The color sequence is so rapid that the eye superimposes the blue-appearing object on top of its later green appearance to reproduce its normal combination color.

Electronic Color TV. – The all-electronic color TV system at the present time uses a picture tube having a screen made of three different fluorescent materials. Each will glow a different color when excited by an electron beam. This tube is called the *tri-color kinescope*. Its screen consists of tiny fluorescent dots arranged in thousands of triangular groups, each little group of three comprised of a green-emitting phosphor, a red-emitting phosphor and a blue-emitting phosphor. The tri-color tube neck contains three separate electron guns. Due to the angles that these guns shoot electrons onto the screen, each one of the electron beams always strikes one particular series of color-emitting dots. The beam that always hits the green dots is called the "green electron beam", the one that hits the red dots is the "red beam," and the other would be the blue beam.

The transmitter requires three camera tubes each having a color filter. One camera tube gets only the red parts of the picture; the second only the blue, and the third, only the green. An electronic switching mechanism selects the output signal from each camera tube, one at a time. The three color video signals are then transmitted to the receiver.

In the tri-color tube at the receiver the the three electron guns are turned on for each color. When the red camera tube's signal is transmitted, the red electron beam is turned on. This will produce the red picture details. When the blue camera tube's signal is being transmitted, the blue electron beam is turned on to produce the blue picture details, the same action takes place for green.

Since the individual color dots are very tiny, and the different color pictures follow each other onto the screen rapidly, our eyes blend them together to form a natural color.

Compatibility. – The electronic system is a compatible system. This means that the present black and white TV receivers can continue to work in black and white even on a color TV broadcast.

This occurs because both black-and-white television and the electronic color system use the same basic standards: number of lines in the picture, and the horizontal and vertical scanning frequencies.

The mechanical color wheel arrangement is not compatible with the scanning standards for black-and-white pictures because mechanical color TV system uses 144 cps and 29,160 cps as the vertical and horizontal scanning frequencies.

UHF TELEVISION CHANNELS

24-9. – At the present time there are only 12 channels assigned to commercial television broadcasting. These are channels 2 to 13, in the Very High Frequency (VHF) band. Of these, only seven channels can be used in any one area, due to the possibility of interference between adjacent channels. Because of the demand for additional channels for television, the Federal Communications Commission has announced that many new channels will be opened in the near future. These new channels will use frequencies from either 470 Mc, or 500 Mc, to 890 Mc, in the Ultra High-Frequency (UHF) band. The F.C.C. plans on licensing many new stations in the new channels, which will be numbered 14 to 65 inclusive, to provide 52 new channels.

When this UHF television becomes a reality many TV receivers will require a converter unit to be added, to enable the set to receive the new channels. Several companies have converter units which use continuous tuning to pick up any one of the 52 new channels.

To receive the UHF channels the incoming signal would heterodyne, or beat, with the output of the oscillator stage in the converter. The beating of the two frequencies takes place in a mixer stage which is also part of the converter unit. The difference frequencies could be fed to the receiver's antenna input terminals. By adjustment of the converter's oscillator frequency the beat frequencies could be the same as one of the unused lower television channels in that area. The receiver would be tuned to that unused channel to operate on the UHF channels with the converter.

For example: suppose that channel 3 (60 to 66 MC) is not used in some particular area, as in New York City. The picture carrier frequency for Channel 3 is *61-1/4 mc*. The sound carrier frequency for channel 3 is *65-3/4 mc*. Let's keep these two frequencies in mind. The receiver tuned to Channel 3 will be able to pick up these signals. Now suppose that the desired UHF station has a frequency range of 500 to 506 mc. Its picture carrier frequency will be 501-1/4 mc., and its sound carrier at 505-3/4 mc. If the converter's UHF oscillator is operating at 440 mc., then both carriers will beat with the UHF oscillator's signal in the mixer stage.

The result will be two new beat frequencies. One will be the difference between the UHF video carrier (501-1/4 mc.), or *61-1/4 mc*.

The second will be the difference between the UHF sound carrier (505-3/4 mc.) and the UHF oscillator (440-mc.), or *65-3/4 mc*.

Note that these two beat frequencies, 61-1/4 and 65-3/4 mc., are the same that the receiver needs when operating on Channel 3. The converter unit then simply changed the UHF station frequencies to those the receiver is capable of handling.

The receiver itself then beats these signals against its own local oscillator to produce still lower frequencies for the i-f stages of the receiver, in the same way that the receiver would operate for a station on Channel 3.

◆

NOTES

NOTES

NOTES

NOTES

TELEVISION SERVICING COURSE

PREPARED BY

RCA INSTITUTES, INC.

A SERVICE OF RADIO CORPORATION OF AMERICA

HOME STUDY DEPARTMENT

350 West 4th St., New York 14, N. Y.

LESSON TWENTY-FIVE

LOCALIZING TROUBLES IN THE TV RECEIVER

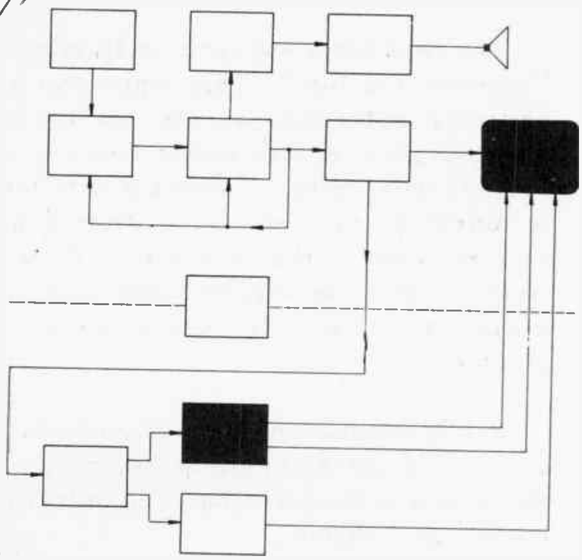

Lesson 25

FUNCTIONS OF A TV RECEIVER

25-1. – In this lesson, we are going to explain how to localize troubles in a TV receiver, to a specific *section* of the of the receiver. However, before we can actually do any troubleshooting, we must know something about the general operation of a TV receiver. Therefore, we begin this lesson by studying the receiver in block diagram form. Following this, we shall study the principles of the superheterodyne receiver circuit. Then we shall go into the principles of troubleshooting.

Basic Functions. – Every television set must perform several basic functions if it is to reproduce the picture and sound sent out from the transmitter. In order to perform these functions properly, certain information must be fed into the receiver via the antenna and transmission line. The type of signal information we are most concerned with at this time may be divided into the following three sections:

1. Sound signals
2. Picture Signals
3. Synchronizing signals

The three signals just mentioned are acted upon by the receiver in the following general manner. The picture signals are amplified and detected and finally arrive at the control grid of the kinescope. The sound signals are amplified and detected and eventually reproduced by the loudspeaker. The synchronizing signals are amplified, detected, and separated. They are then fed to the vertical and horizontal deflection circuits.

When the signal comes down the transmission line into the TV receiver, the receiver must perform certain operations upon this signal to make it usable in reproducing a television program. These operations may be listed as follows:

a. One television channel must be selected.
b. The sound signal must be separated from the picture signal.
c. The sound and ~~picture~~ signals must be amplified, detected and fed to their proper sections.
d. The synchronizing signals must be separated from the picture signal.
e. The vertical and horizontal synchronizing signals must be separated and fed into their proper channels.

The above operations must be performed on the transmitted television signals by any television receiver regardless of its design. In order to appreciate more fully how the receiver performs such operations, we are next going to study a typical television receiver in block diagram form.

BLOCK DIAGRAM OF THE TV RECEIVER

25-2. – A simplified diagram of a TV receiver is shown in Fig. 25-1 on the next page.

The first block we come to is labelled "antenna and line". This represents the particular television antenna in use and the transmission line connecting the antenna to the receiver. These are necessary to intercept the television signals and deliver them to the receiver, with minimum losses. The transmission line connects directly into the r-f section of the receiver.

R-f Section. – The r-f section performs one of the most important operations in the receiver. Its function is to select the one desired channel.

Entering the r-f section, the first circuit the signals encounter is an impedance matching network which matches the transmission line impedance to the receiver input. In many TV receivers,

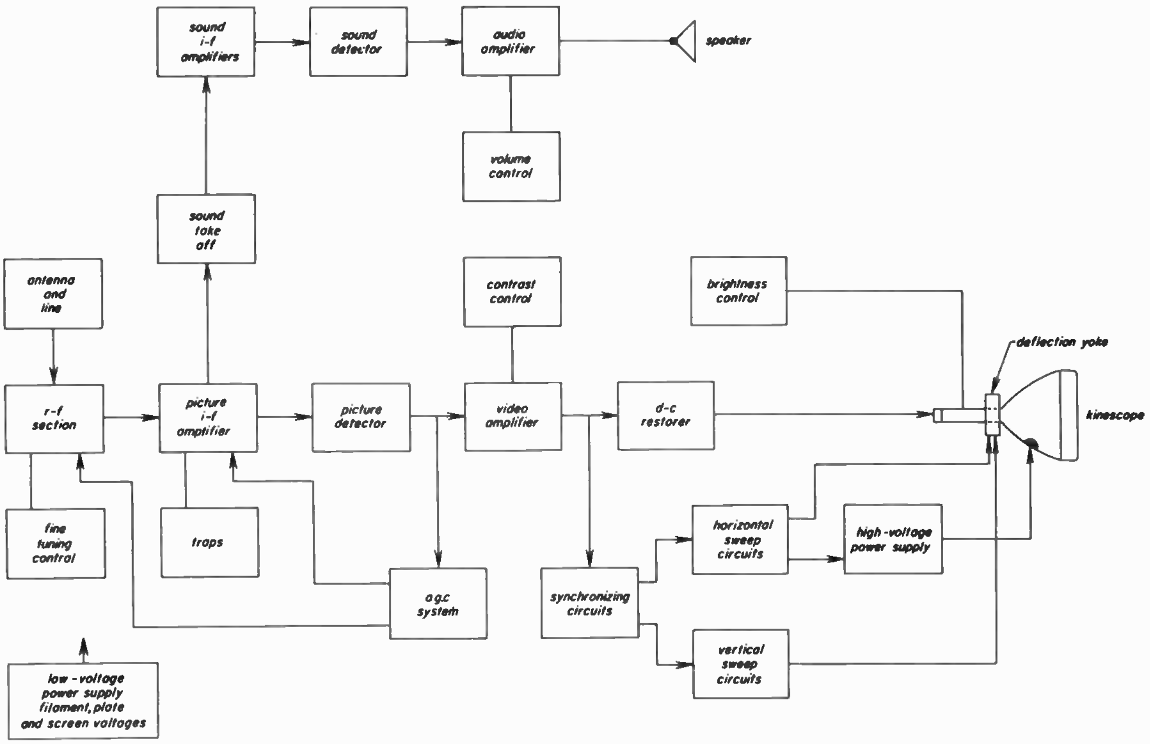

Fig. 25-1

this network is so arranged as to be able to match either a 300 ohm parallel wire line or a 72 ohm coaxial line.

The block labeled "r-f section" actually contains the circuits for three stages. These are; (a) the r-f amplifier, (b) the oscillator, and (c) the converter. The r-f amplifier is the first stage that the signal enters after passing through the impedance matching network. This stage contains a vacuum tube amplifier and tuned circuits for each television channel. Tuning, in most receivers, is accomplished by switching methods that change the tuned circuits for each channel The tuning of all three stages of the r-f section is accomplished simultaneously with the operation of the channel selector switch. A "fine tuning" control is also provided in many sets for vernier adjustments within each channel.

In summary, then, the r-f section selects one channel, amplifies the desired sound and picture signals, while providing some rejection of undesired signals .

Picture I-f Amplifier. – After the desired channel has been selected by the r-f section, it is next fed into the picture intermediate-frequency amplifier section. While these are commonly referred to as *picture* i-f's, it has become common practice to also amplify sound signals in one or two stages of the picture i-f section. Basically, the function of the picture i-f section is to amplify the picture (and sync) signals to a level suitable for detection. However, as already mentioned, some amplification of sound signals may also take place in a portion of the picture i-f amplifier.

In certain TV receivers known as "Intercarrier sound" receivers, the sound and picture i-f signals are both amplified in the same i-f amplifiers. The details of this system will be discussed in a later lesson.

At this point in the receiver, we have present the signals from one channel containing both sound, picture, and sync information. It is now necessary to separate the sound signal from the picture signal, so that they may be separately amplified, detected and reproduced. In many receivers the actual separation may not occur until after the *second* picture i-f stage. Both picture and sound i-f carriers and sidebands are amplified in the first two picture i-f amplifiers in such receivers. In the 630TS type receiver the sound is separated from the picture signals immediately following the r-f section and preceding the first video i-f amplifier. In the first case, where the sound is taken off after the second picture i-f amplifier, this method results in the saving of one sound i-f amplifier stage. In either case, the sound intermediate-frequencies are separated from the picture i-f by means of a sharply tuned circuit which is resonant to the sound i-f frequency. In our block diagram this circuit is included in the block labeled, "sound take-off".

The picture and sync information is amplified in the picture i-f amplifiers. This consists of three or four separate amplifier stages which are properly arranged to pass the full bandwidth required for the picture information. The need for considerable amplification of the received waves can be seen if we realize that the signal fed to the receiver from the antenna may be in the order of 1/1000 of a volt or less, and the picture signal required to drive the kinescope may have to be about 50 volts. A large percentage of this amplification is obtained in the i-f stages.

Video Detector. – After the picture signal goes through the i-f stages it must be demodulated. In the i-f stages the signal is a modulated radio frequency wave, although the original frequency has been reduced to that of the intermediate frequency (i-f). Demodulation is accomplished in the *video detector* following the picture i-f stages. The function of this detector is to extract the picture and signal information from the modulated i-f carrier signal that has been amplified by the previous i-f amplifier stages.

Video Amplifier. – The magnitude of the output signal from the video detector is about 5 volts. Although the form of the signal is suitable for application to the kinescope grid, the amplitude is too small since we need about 50 volts. Therefore, additional amplification is required between the video detector and the grid of the kinescope to bring the video signal up to the required magnitude. This is provided by the *video amplifier*. This circuit generally consists of a specially compensated R-C coupled amplifier. This amplifier is similar to an audio amplifier. However, an unusually wide frequency range must be covered - from about 30 cycles to 4 megacycles - so that there is no distortion of picture information. Compensation for both low and high frequency response is provided by means of R-C networks and inductances. The polarity of the video signal fed to the kinescope grid must be such that the blanking and synchronizing pulses drive the grid in the negative direction. The blanking pulses must drive the kinescope grid below cut off so that the scanning retrace lines will not be visible. With two stages of video amplification there is a total phase inversion of 360 degrees, which means that the output signal of the second stage is of the same phase as the input signal to the first stage. The output of the video detector must be of negative sync phase. If only one stage of video amplification is used, the output of the video detector must be of *positive* sync phase, since a reversal of 180 degrees through the one stage provides the kinescope grid with negative sync signals.

D-c Restorer. – A circuit called a *d-c restorer* is incorporated into some receivers. As you can see in the block diagram, the d-c restorer is placed between the video amplifier output and the kinescope grid. The purpose of the d-c restorer is to insure that the average picture brightness is correctly reproduced on the kinescope.

The average value of the picture signal is a d-c value which represents the *average* brightness of the transmitted scene. This d-c level may be inserted in the modulator of the television transmitter and effectively radiated with the signal. The d-c level is preserved through all of the r-f and i-f stages of the receiver and is also present in the output of the video detector. However, if any coupling condenser is present anywhere in the circuits between the video detector and the kinescope grid, the d-c level is lost and the scene brightness may not be correctly reproduced. In receivers using d-c restorer circuits, these usually consist of a diode rectifier and associated R-C circuits. The action of the restorer is to line up the blanking and sync pulses at a common level regardless of scene brightness and thus re-insert the original d-c value as it appeared at the transmitter. Some receivers are so designed that no coupling condenser appears after the video detector. In such cases a d-c restorer is not needed since there is no loss of the d-c level. Such receivers incorporate video amplifiers which are said to be *direct-coupled, or d-c coupled.*

Kinescope. – After d-c re-insertion, (when used) the video signal of negative sync polarity is applied to the grid of the kinescope. At this point, the signal causes variations in the intensity of the electron beam which in turn causes light intensity variations on the face of the kinescope. Since the beam is being swept horizontally and vertically during the light intensity variations, a picture is traced out on the screen.

Sound I-f. – Now let's go back to the block diagram and follow the sound signal. Depending upon the receiver, the sound signal is taken off in one of several places, as outlined before. The sound is taken off by a tuned circuit and is fed into the first stage of the sound i-f amplifier. Depending upon the sound take-off point, there may be either two or three stages of sound i-f amplification. The function of the sound i-f amplifier is similar to that of the picture i-f amplifier–that is, the sound signals are amplified to a level suitable for use by the sound detector stage.

Sound Detector. – Since the sound signals are *frequency modulated,* a special FM detector must be provided for demodulation. This is generally a *discriminator,* or a *ratio detector* circuit.

The sound detector performs a function similar to the video detector. It extracts the sound information from the frequency modulated i-f carrier wave. After detection, the sound signal passes through a conventional audio amplifier to the loudspeaker.

Audio Amplifier. – The audio amplifier in most sets consists of two stages, a voltage amplifier and a power amplifier. The voltage amplifier may be a high mu triode such as the triode section of the 6AV6 double diode - triode (or equivalent); the power amplifier tube is often a 6K6GT beam power pentode or similar tube. It is interesting to note that the frequency response of the audio amplifier in a television set is, in general, required to be superior to that of a conventional broadcast set, since the FM audio for television contains frequencies up to 15,000 cycles. The television receiver should be capable of reproducing this.

AGC. – The picture channel is generally provided with some system of *automatic gain control* (AGC). This is a circuit which tends to keep the output of the picture r-f and i-f systems constant, regardless of variations in antenna signal.

AGC is very important in reducing picture fading, such as "airplane flutter" and video variations produced by other causes. Airplane flutter is a very rapid (and annoying) variation of picture signal strength due to nearby flying aircraft. There are various methods of producing AGC control voltages, some of which will be described in later lessons.

Synchronizing Circuits. – The horizontal and vertical sync pulses are transmitted together with the picture signals. They remain this way in the receiver all the way up to the kinescope. However, in order to use these pulses to synchronize the deflection circuits, they must first be separated from the picture signals and then separated from each other. These operations are performed in the block labeled "synchronizing circuit". In these circuits, the horizontal and vertical sync pulses are first separated from the picture signal. After this, the horizontal pulses are separated from the vertical pulses and fed into the corresponding sweep (deflection) circuits. In connection with the sweep circuits, the sync pulses are utilized to synchronize the electron beam in the receiver kinescope with that at the transmitter camera tube. In this manner, a picture is reproduced on the kinescope which is a faithful reproduction of the transmitted scene.

Sweep Circuits. – The horizontal and vertical sweep circuits are indicated as separate blocks in Fig. 25-1. These are the circuits which produce the proper deflection of the kinescope beam through the medium of the deflection yoke. We shall have more to say about these circuits a little later on.

High Voltage Power Supply. – In many receivers, the high voltage power supply is an integral part of the horizontal deflection system. A separate high voltage rectifier tube and filter network are provided. This power supply has an output which goes to only one point – the kinescope second anode. The function of this voltage was discussed in Lesson 23.

Low Voltage Supply. – All of the tubes in the blocks of Fig. 25-1 require certain voltages to operate. For example all tubes require filament voltages and plate voltages. In addition, many tubes also require screen grid voltages. All of these various voltages are supplied by the low voltage power supply. The functioning of this supply will be taken up in more detail later on.

Deflection Block Diagram. – Because of its importance in the TV receiver and specifically its importance in operating the kinescope, we are treating the deflection system in more detail at this time. An *expanded* block diagram of a typical deflection system is shown in Fig. 25-2.

The deflection system may be divided into two parts, the vertical and horizontal sections. Since the vertical section is the less complicated of the two, we will consider this first.

The first stage is labeled "vertical oscillator and discharge tube". In some of the earlier model receivers, this was actually two separate tubes. However, in all late model sets, one tube performs both functions. The vertical oscillator is of the so-called "blocking-oscillator" type which you will study in more detail in a later lesson. This oscillator is a "free-running" type. This means that it will operate with or without the presence of sync signals. This oscillator performs a very important function in that it determines the frequency of the vertical deflection forces. In its functioning as a "discharge" tube, this circuit also develops the correct signal waveform necessary for linear vertical deflection. Note carefully that this oscillator and discharge circuit is responsible for generating the signals necessary *to produce vertical deflection.* The frequency of operation of this circuit is 60 cycles per second, when synchronized by the vertical sync pulses.

In order to adjust this frequency to the correct value, a vertical hold control is provided as shown in Fig. 25-2. A "height" control appears in the discharge tube circuit. As its name implies, the function of this control is to vary the amplitude of the kinescope raster in the vertical direction.

The deflection signals generated in the vertical discharge tube do not have sufficient power to drive the vertical deflection coils directly. Therefore, they must be fed into the vertical output stage. This stage increases the power sufficiently to provide the necessary vertical deflection. Included in the vertical output stage we find a vertical "linearity" control. The function of this control is to make the raster on the kinescope linear in the vertical direction.

Horizontal Deflection Circuits. – Now that we have looked at the vertical deflection circuits, the next logical step is to go through the horizontal deflection circuits. These are more complicated because the horizontal system includes such things as automatic frequency control and the high voltage transformer. Of course, we are not able to go into any great detail at this time, but will simply explain enough so that you can get a general idea of the functioning of these circuits.

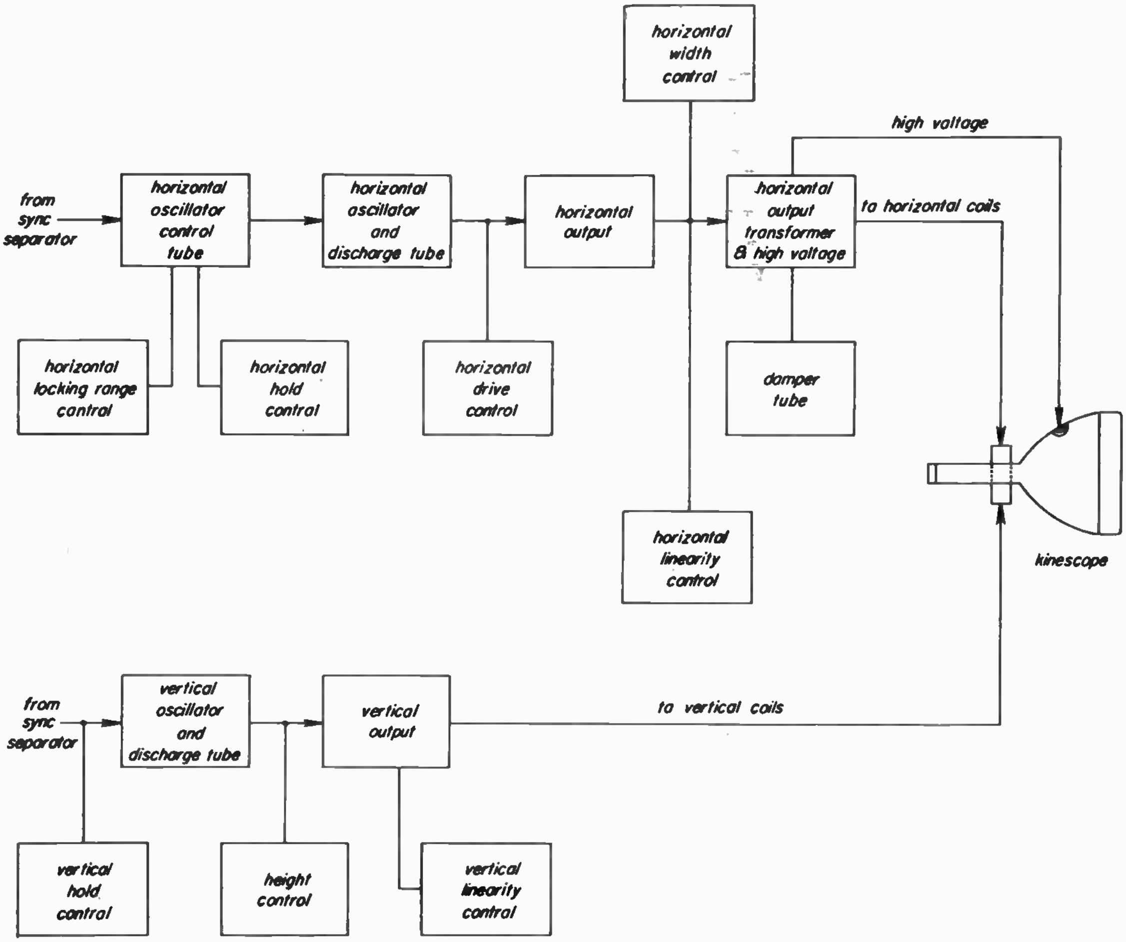

Fig. 25-2

As was the case in the vertical sweep circuits, we again start with the sync separator. Sync pulses are fed into the horizontal sweep oscillator control tube. Briefly, the function of the control tube is to provide automatic control of the frequency of the horizontal oscillator, as determined by the frequency of the horizontal sync pulses. This automatic frequency control, or AFC, has two major advantages. First, it greatly improves the immunity of horizontal sweep from noise pulses and other interference. Secondly, it relieves the viewer of the necessity of adjusting the horizontal hold control when changing stations.

Horizontal AFC Controls. – The *horizontal locking range* control is a set-up adjustment for horizontal AFC. It will be discussed more fully in a later lesson. The "horizontal" hold control has the same basic function as the vertical hold control. That is, it adjusts the frequency of the horizontal oscillator so that it may be synchronized by the horizontal pulses, through the AFC system.

Horizontal Sweep Oscillator. – The horizontal sweep oscillator proper, is usually a blocking oscillator type of circuit, similar in principle to the vertical oscillator, previously discussed. It also operates in conjunction with a discharge circuit to produce the proper waveform for horizontal deflection. Again, note carefully, that as in the case of the vertical circuit, the horizontal oscillator and discharge stage is responsible for generating the signals necessary to produce horizontal deflection.

Horizontal Output Circuits. – The output of the horizontal discharge tube is not capable of driving the horizontal deflection coils directly so these must go through a horizontal output tube. At the input to the horizontal output tube, we find a horizontal "drive" control. This control regulates the amplitude of input signal to the horizontal output tube. It thus affects the width and horizontal linearity of the raster.

The horizontal sweep output tube provides the energy for the high voltage power supply. The high voltage is obtained from positive pulses (15,750 per second) formed during the horizontal retrace time. A special horizontal output transformer is utilized, which by means of several windings provides the high voltage to be rectified for the kinescope anode, the filament power for the high voltage rectifier and the energy to operate the horizontal deflection coils. A special system of horizontal deflection is used which permits considerable energy saving. The damper tube is a part of this special system and its operation will be described in a later lesson. The horizontal output circuit includes controls for adjusting the horizontal linearity and width of the picture on the kinescope screen.

SUPERHETERODYNE RECEIVERS

25-3. – The television receiver, like many others, is of the "superheterodyne" type. Before we can really understand how the television receiver works we must be familiar with the principle of a superheterodyne circuit. Therefore, we are going to take time out now to investigate this problem.

TRF Receiver. – Generally speaking, there are two basic types of receivers, the "tuned r-f", and the "superheterodyne". The tuned r-f receiver is rarely used. For comparison purposes though, let us first examine a simplified diagram of a typical tuned r-f receiver which is shown in the block diagram of Fig. 25-3.

This type of receiver consists of several r-f tuned stages followed by a detector, audio amplifier and speaker.

All three radio frequency stages are tuned together, usually by a three gang variable tuning condenser. (A TRF receiver may have other than three tuned stages, however.)

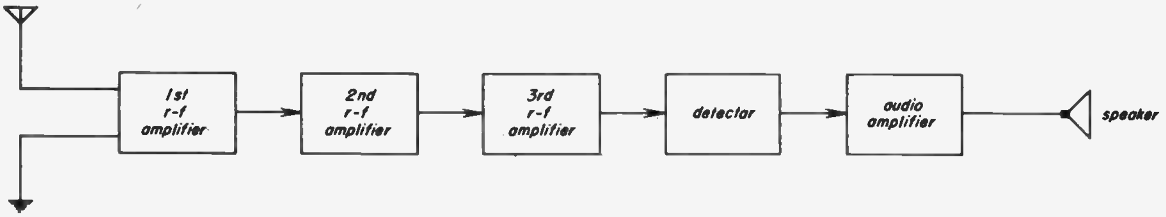

Fig. 25-3

There are several important disadvantages of a tuned-radio-frequency (TRF) receiver. Perhaps the main one is that *all* radio frequency stages must be tuned over a wide band of frequencies. This generally means that the r-f circuits cannot be designed to give optimum efficiency. This results in relatively poor selectivity and sensitivity. Selectivity may be defined as the ability of a receiver to discriminate between the desired signal and undesired signals. Sensitivity of a receiver is a measure of its ability to provide satisfactory output when a weak signal is received in the antenna. The sensitivity and selectivity of a TRF receiver may be improved by adding additional tuned stages. However, this makes the receiver unwieldy in size, and creates other problems such as the difficulty in preventing undesired oscillations from occurring.

The Superheterodyne Principle. – The disadvantages of the TRF receiver may be largely overcome by *reducing* the frequency of the incoming signal after it has been selected by tuned r-f stages and then further amplifying it in fixed-tuned stages. These fixed tuned stages are known as intermediate frequency amplifiers, or simply *i-f* amplifiers.

Because the i-f amplifier operates at a *fixed* frequency, it is possible to design it to provide the maximum selectivity and sensitivity. The i-f amplifier also provides most of the radio frequency gain of a superheterodyne receiver. A further advantage of a superheterodyne receiver is that there is less tendency for r-f oscillations to occur. This is true because r-f amplification takes place at *two* different frequencies (r-f and i-f) and thus reduces the possibility of creating undesired oscillations in the receiver.

A simplified block diagram of a superheterodyne receiver is shown here:

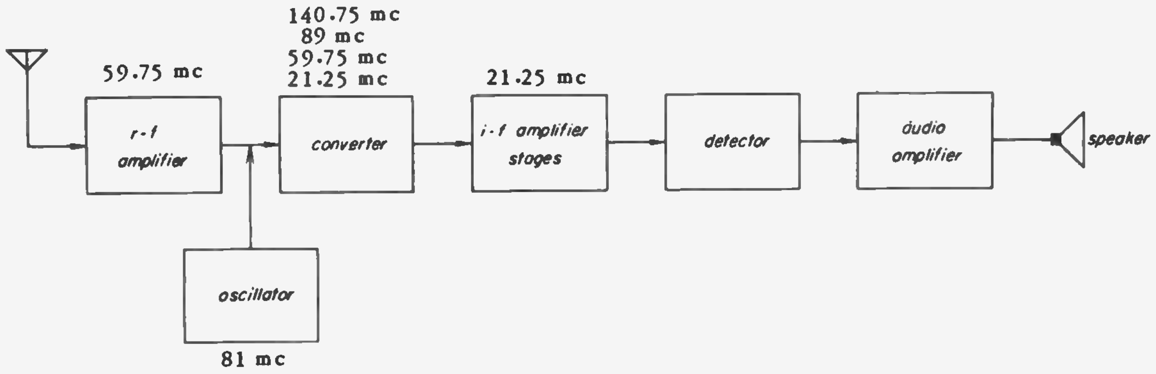

Fig. 25-4

This actually represents the sound portion of a television receiver and the frequencies indicated are those often used in television. We have a signal coming in from the antenna at a frequency of 59.75 mc. This is the sound carrier of Channel 2. This signal is selected and amplified by the r-f amplifier, which is now tuned to receive 59.75 mc. (Actually it receives the entire channel 2, 54 to 60 mc.).

The stage following the r-f amplifier is called the *converter*. The converter is a special stage unlike any in a trf receiver. First of all, it has a bias such that it operates approximately Class AB on the *non-linear* portion of the characteristic curve. This is very important. Secondly, its input and output circuits are tuned to different frequencies. And thirdly, it has two separate signals fed into its input circuit. One is the incoming signal from the r-f amplifier at 59.75 mc and the other the locally generated sine wave signal from the oscillator at 81 mc. Basically, the function of the converter is to cause heterodyning of the two input frequencies (oscillator and r-f) in order to produce a third frequency in the output, which will be the i-f. Let us take out a moment to talk about this phenomenon of producing a third frequency from two others by heterodyning.

Heterodyning. – Let us take two frequencies of 100 and 101 cycles and apply them to a *non-linear* circuit such as a class AB amplifier. This produces the phenomenon known as "heterodyning". When two frequencies are fed into a non-linear circuit, distortion takes place and this distortion has the effect of producing *new* frequencies in the output which were *not* present at the input. These new frequencies may actually be filtered out and used. The most important frequencies present in the output of a non-linear circuit are:

a. The original two frequencies (in this case, 100 and 101 cycles)
b. The sum of the two original frequencies (201 cycles)
c. The difference between the two original frequencies (1 cycle)
d. Many harmonic (or multiple) frequencies

Any of these frequencies can be filtered out and used. This is the principle used in a superheterodyne, where two different frequencies are fed into the grid of the converter stage. As we said before, the converter operates class AB, which means that it is a *non-linear* circuit and produces *heterodyning*. Looking back at the block diagram of Fig. 2-4 we see that the frequencies of 59.75 and 81 mc are both fed into the converter. The output frequencies from the converter include the originals (59.75, 81 mc), the sum (140.75 mc), the difference (21.25), and many harmonic frequencies.

In most superheterodyne receivers, it is desired to utilize the difference frequency as the intermediate frequency, since this is lower than the r-f signal and easier to amplify. In this case the difference frequency is 21.25 mc, and this is chosen as the sound i-f. We have seen that the output of the converter contains various frequencies. We desire to reject most of these and select only the required i-f, which in our particular example is only the sound i-f of 21.25 mc and its sidebands. It is important to note that the intermediate frequency still contains the original modulation information, practically undistorted.

Selection of the desired intermediate frequency is accomplished by means of tuned circuits having the correct bandwidth characteristic.

Function of Oscillator. – At this point, it is very important to note the function of the oscillator. It actually *chooses the station* to be passed by the i-f amplifiers. The frequency of each station is fixed. However, the oscillator frequency may be varied. By using the right oscillator frequency to heterodyne with the station frequency we can actually select the desired station to be fed into the i-f amplifiers. If the oscillator frequency is not right, or if the oscillator is inoperative, you cannot receive the station even if every other part of the set is working correctly. This fact is very important in troubleshooting and should be kept in mind.

LOCALIZING TROUBLES

25-4. – The process of localizing troubles in a TV receiver is divided into two parts

1. Localizing the trouble to a *section* of the receiver.
2. Localizing the trouble to a specific *defect* in that section.

In this lesson we are only going to be concerned with localizing the trouble to a section. Localizing to a specific defect will be taken up in later lessons.

You might well ask what a "section" of a TV receiver is. For the purpose of

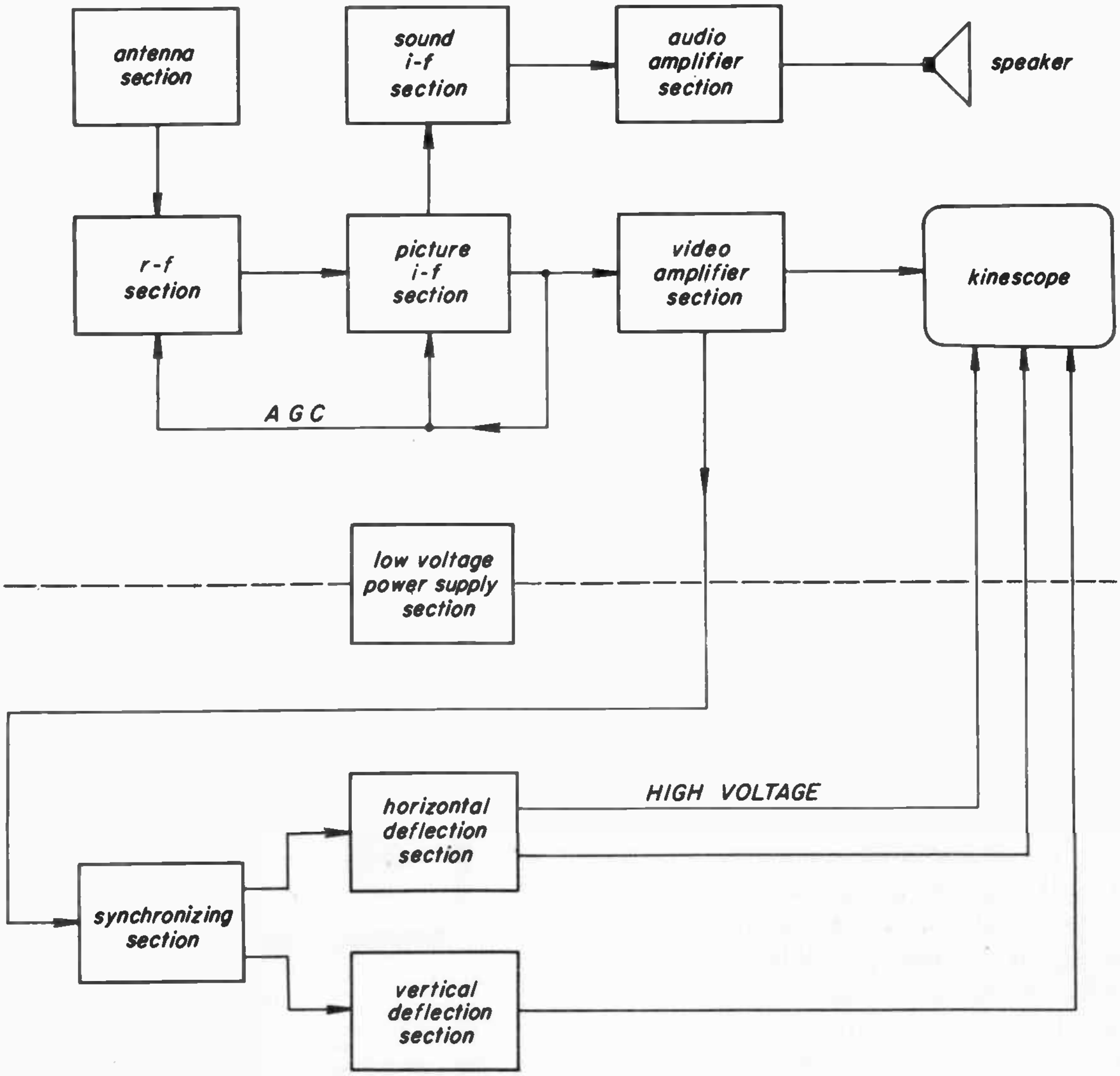

Fig. 25-5

troubleshooting it would be well to set down a list of sections to which troubles may be localized. The following may be considered as sections:

a. The antenna section, including the transmission line
b. The r-f section. This includes r-f amplifier, mixer and oscillator
c. Sound i-f section, including the sound detector and, in some sets, part of the picture i-f section
d. Sound amplifier section, including the loudspeaker
e. Picture i-f section, including the picture detector
f. Video amplifier section
g. Kinescope
h. Synchronizing section
i. Horizontal deflection section, including high voltage and damper circuits
j. Vertical deflection section
k. Low voltage power supply section, including plate, screen and filament voltage supplies

These sections are shown in the troubleshooting block diagram in Fig. 25-5.

This block diagram is going to be reproduced a number of times to illustrate the procedure of localizing troubles to various sections of the receiver. Use these block diagrams in connection with the list of blocks given above so you will know which portions of the receiver are included in each section.

Dead Receiver But Tubes Light. – Let us first take up the case of a completely dead receiver. By "dead" we mean that there is no sound and no raster present on the kinescope. Incidentally, a raster is made up of scanning lines and appears as overall brightness on the screen. It is possible to have a raster without picture. However, it is not possible to have a picture without raster. Since we can see the tube filaments are lit, we know the set is plugged in and turned on and is receiving energy from the power line. We must check these things, however, if the filaments are not lit.

We can analyze this trouble very simply. Since neither the raster or sound is present the trouble is likely to be in some section common to both. The most obvious section to be at fault in a case such as this is the low voltage power supply section. Therefore, this section should be checked first.

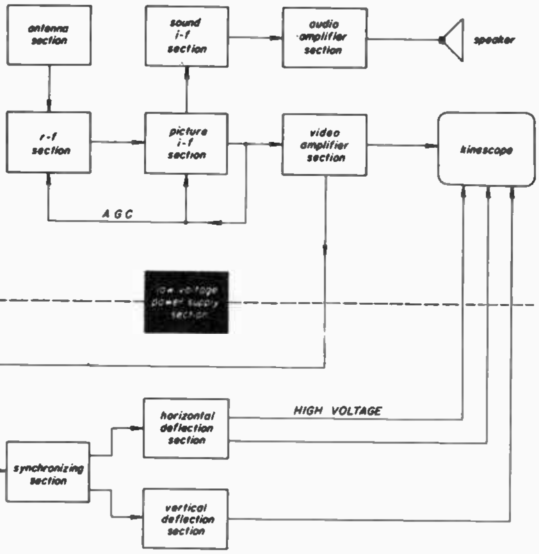

Fig. 25-6

Normal Raster, But No Sound Or Picture.– The fact that a raster appears on the kinescope, is an important clue. It means:

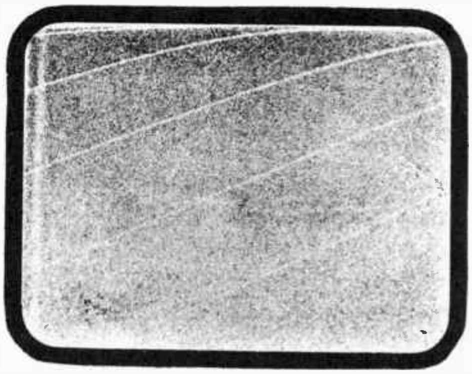

Fig. 25-7

1. The high voltage supply must be working properly.
2. The deflection circuits must be all right.
3. The low voltage power supply section must be basically in good order.

In spite of number 3, we should still check for B plus in the sound and picture channels.

The fact that sound *and* picture are missing *simultaneously* is an important clue. This points to a section *common* to both the sound and picture sections.

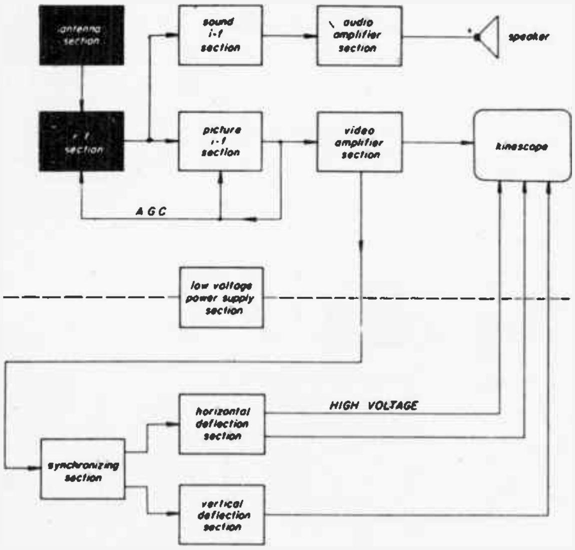

Fig. 25-8

From inspection of the block diagram in Fig. 25-8, we note that two sections are common to the sound and picture signals. These are the antenna section and the r-f section.

Let's investigate the r-f section first. Within the r-f section, there are three stages: the r-f amplifier, converter and oscillator. By means of simple checks we can frequently isolate the trouble to one of these three stages. *An important clue is to look for snow in the raster.* The contrast control should be turned up full for these checks. If snow appears in the raster, we may assume that the converter is working since most of the snow originates in this stage. This leaves the r-f amplifier and oscillator stages. A simple test can be made to determine if the oscillator is at fault. This is to measure the negative control grid bias of the oscillator. You may also measure the negative control grid bias of the converter to determine if the oscillator is working. This bias is generated by the oscillator and will only be present if the oscillator is working. Use the lowest scale on the meter so you can see an appreciable deflection, if any. If you do get meter deflection and snow is present, the trouble probably is in the r-f amplifier.

Sometimes, a defect in the antenna and transmission line may cause this trouble, so be sure to check this section, if the r-f section seems to be normal.

Picture Normal, But No Sound. – In this case, the raster and picture are normal, but no sound is present. This immediately tells us that the entire picture channel from the antenna to the kinescope is operating properly. Try switching to several other channels. If the sound is present, on any channel, the fault probably is incorrect adjustment of the oscillator frequency for this channel. When sound is missing on only one or two channels, the oscillator may be adjusted for best sound. If you do this, first set the fine tuning control to the center position. Oscillator adjustments are usually available from the front, without removal of the chassis.

If no sound is present on any channel, the possible faulty sections are blacked out in the diagram of Fig. 25-9.

As indicated here, the sound i-f section or audio amplifier section is probably at fault. We can narrow this down to either section by injecting a signal into the input of the audio amplifier. One way to do this is as follows: With the volume control turned up full, touch your finger on the center lug of the control. In many sets, this control is on top of the chassis and can be reached from the rear of the cabinet. When a dual control is used (sound and picture), the volume control is usually the one at the rear. If the set has a "Phono" jack, touch the inside connection of the

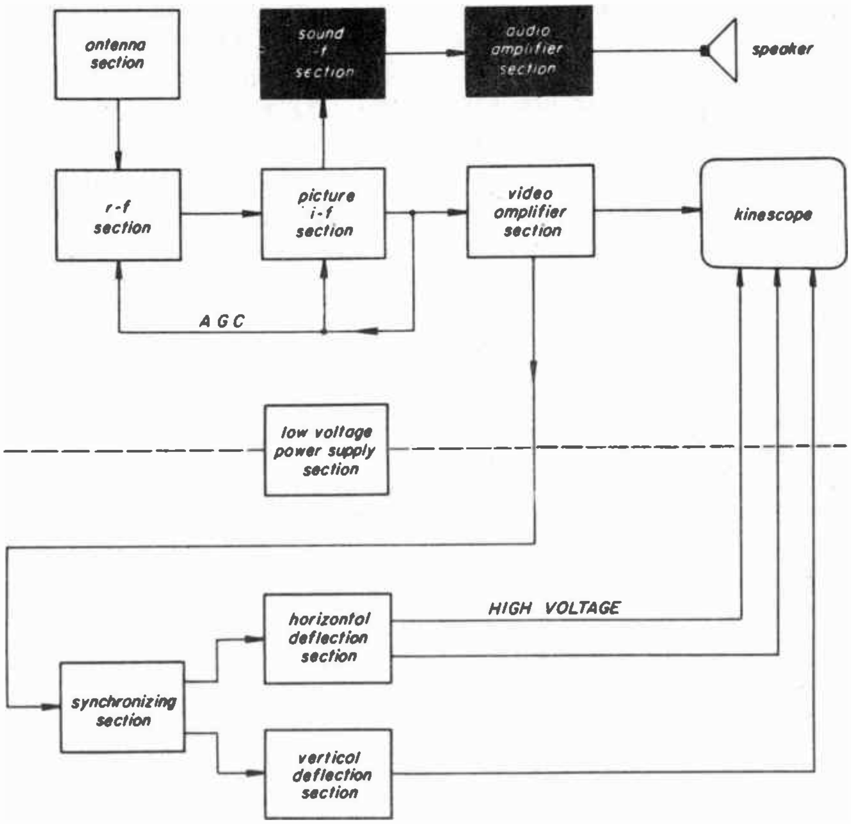

Fig. 25-9

jack with a small screw driver, with the function switch in "Phono" position. If a loud hum results, the sound amplifier section is O.K. and the trouble is in the sound i-f section. If no loud hum results, the audio amplifier section is at fault. Incidentally, this hum is a 60 cycle hum.

A simple test can narrow the trouble down even further. Assume the trouble to be in the audio amplifier section. Taking the tube nearest the speaker, (power amplifier), plug it in and out several times. If loud clicks result, the speaker and power amplifier stage are probably O.K. If not, your trouble is right there. If you do get clicks here go back one stage and listen for clicks in the voltage amplifier stage. If you don't get them now your trouble is in this stage.

Use a similar procedure in the sound i-f section if trouble has been localized there. Always start with the tube *nearest the speaker*, which in this section is the sound detector.

Sound and Raster Normal, But No Picture. – This condition indicates that the entire sound channel from the antenna to the loudspeaker is functioning. The presence of a normal raster tells us that the deflection and high voltage sections are O.K. The kinescope screen would look the same as shown in Fig. 25-7. This condition also indicates that the low-voltage power supply must be basically all right. Therefore, the trouble must be in either the video amplifier section or the picture i-f section.

We can narrow down the trouble to one of these sections by a method similar to that used for the sound channel. The finger method may not be so effective here due to the low gain of the video amplifiers. However, we can overcome this by utilizing the gain of the audio amplifier to increase the 60 cycle signal picked up by your body. This is done simply as follows: connect a wire jumper, in series with a 0.1 microfarad (or larger) condenser from the plate of the audio output tube to the grid of the first video amplifier. Turn the volume control up full and place your finger on the center lug. If the video section is all right, there will be a very pronounced 60-cycle indication on the kinescope. (**Note:** If there is a contrast control in the video section, turn it up to maximum.)

If you see the indication on the kinescope, the trouble is in the video i-f section. If no indication appears, the trouble is in the video amplifier section. Further localization is possible using the "clicking" method previously described, but instead of clicks, we would look for distinct *flashing* in the picture as a tube is plugged in and out. The same basic procedure applied here. Always begin with the tube nearest the indicator (kinescope) and work back toward the antenna.

Normal Sound, But No Raster. – The condition indicates that the entire sound channel, from antenna to loudspeaker is working properly. This also means that the low voltage power supply is basically O.K. No raster, of course, means no brightness at all. This may be caused by a condition of no high voltage, or a loss of any of the kinescope operating voltages, or sometimes by a defective kinescope. A check to see if high voltage is present at the kinescope second anode is easily done, by disconnecting the high voltage lead and attempting to draw an arc to a well insulated screwdriver. If an arc appears, high voltage is present.

In order to operate, the kinescope must be supplied with high voltage and several other essential voltages. The necessary voltages are:

1. **Second anode high voltage. Check by drawing arc**
2. **First anode voltage. Measure with d-c voltmeter**
3. **Cathode voltage. Measure with d-c voltmeter and check brightness control if present here**
4. **Grid bias voltage. Measure same as 3**
5. **Filament voltage. Measure with a-c voltmeter or observe lit filament.**

If all these voltages are correct, and the ion trap magnet is properly adjusted, and no light appears on the kinescope screen, the tube itself is probably at fault.

If high voltage is not present, the trouble is localized to the horizontal deflection section.

Both of these possibilities of no raster are shown blacked out here:

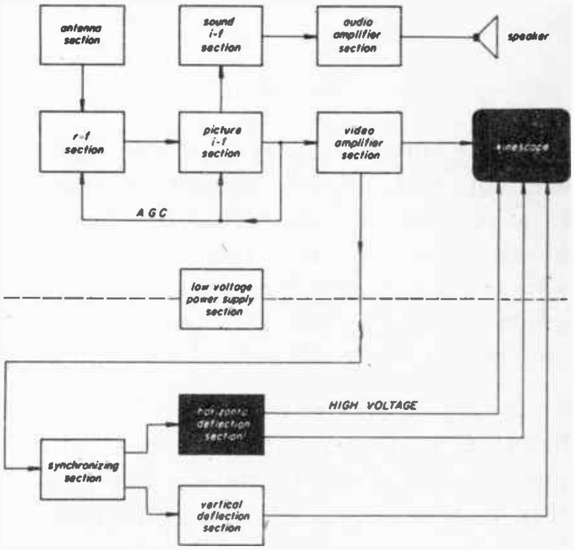

Fig. 25-10

Remember that the horizontal deflection section includes (in most sets) the high voltage rectifier, damper, horizontal output tube and horizontal oscillator.

Sound Normal, Picture Out Of Sync. – We will assume the receiver to be operating normally aside from this trouble, and that an adequate antenna signal is present. Any one of several conditions may prevail, as follows:

1. *There is no sync horizontally and vertically.* The probable section at fault is shown blacked out here:

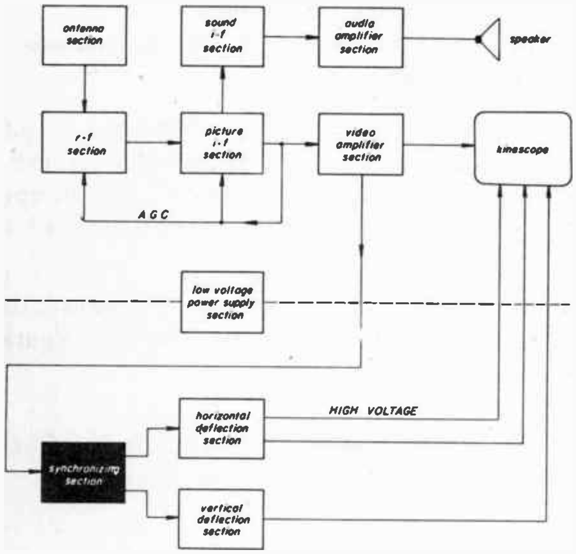

Fig. 25-11

Since *both* horizontal and vertical sync are not present, the trouble is probably in a section that supplies both deflection sections with sync. This would be the synchronizing section. This includes the sync separator, and the sync amplifier and limiter stages, if present.

It should be realized that any circuit handling both horizontal and vertical sync pulses can be responsible for causing this trouble. Thus, if the trouble is not found in the synchronizing section, it might be in the video amplifier, or even in the r-f or picture i-f amplifiers. In this case, the loss of sync is due to some condition that causes the amplifiers to pass high frequencies better than low frequencies. Since sync pulses would be considered as low frequencies, they would not be passed properly, thus affecting horizontal and vertical synchronization.

2. *No Vertical Synchronization, But Horizontal Sync is O.K.* Lack of vertical synchronization is indicated by the whole picture rolling up or down. If the rolling is very rapid, however, you may not be able to see the picture. The faulty section is shown blacked out here.

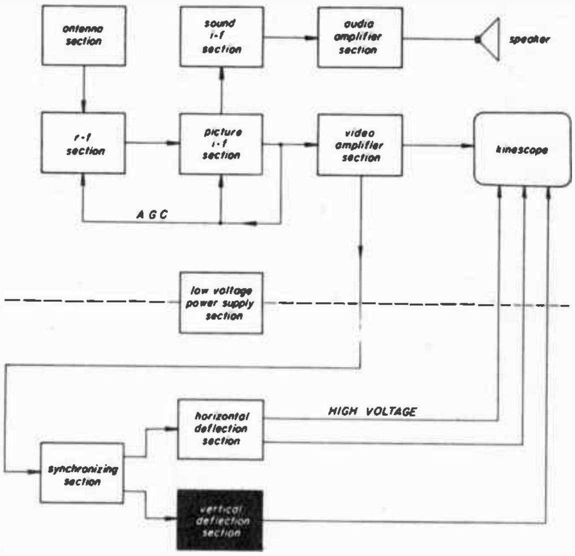

Fig. 25-12

This section generally includes the vertical oscillator and amplifier. We can eliminate the vertical amplifier because it merely amplifies the deflection signals. The trouble could either be a defect preventing the vertical sync pulses from reaching the oscillator, or adefect causing a radical change of oscillator frequency which cannot be corrected with the vertical hold control.

If vertical sync pulses do not reach the oscillator, the defect causing this must be in a circuit that precedes the oscillator. Furthermore, it is probable that the defect will be in a portion of a circuit handling only *vertical* sync pulses. This localizes the defect to a circuit between the output of the sync amplifier and the grid of the vertical oscillator. In many receivers, this circuit consists only of a simple R-C coupling network. Some receivers employ, in addition, a vertical sync amplifier tube, which amplifies only vertical sync pulses.

In the event that the defect is one that causes a change of oscillator frequency, preventing it from being synchronized, the trouble is localized directly to the vertical oscillator stage.

You can determine which of these two is at fault by a simple check. If you cannot stop a *single* picture momentarily by manipulating the vertical hold control, the trouble lies within the oscillator stage. This is indicated by the fact that it is not possible to adjust the vertical oscillator frequency to coincide with the frequency of the vertical sync pulses. If a *single* picture can be stopped momentarily by manipulating the vertical hold control, the trouble is lack of sync pulse input.

3. *No Horizontal Synchronization, But Vertical Synchronization is O.K.* This is indicated by a picture that does not roll vertically, but is torn horizontally; or the picture moves horizontally across the screen, or in diagonal segments.

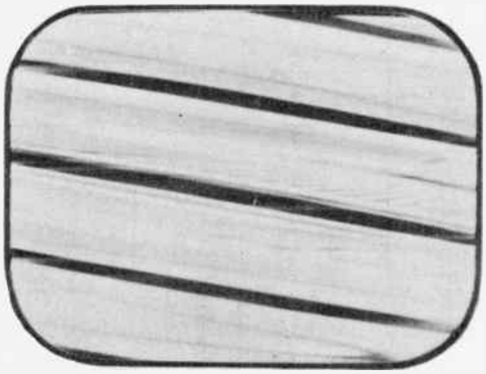

Fig. 25-13

The horizontal deflection section is most likely at fault, as indicated in Fig. 25-14.

As in the previous case, we can eliminate the horizontal amplifier as a cause of this trouble. This usually leaves the horizontal oscillator and horizontal AFC circuits to be checked. In sets employing a separate horizontal sync amplifier, this should also be checked. As before, this trouble could be due to a defect causing a radical change in horizontal frequency, which cannot be compensated for by any control adjustments.

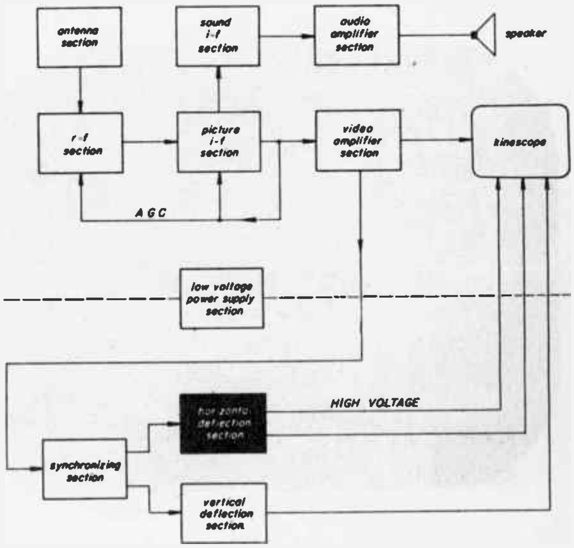

Fig. 25-14

Again we may determine which of these two is the fault by a simple check. Adjust the horizontal hold control and also the rear apron horizontal frequency controls, if necessary. Try to obtain a whole single picture. If you get one, observe whether the picture is *locked* or appears "loose" and non-synchronized. If the picture is *loose*, that is, it requires continuous manipulation of the controls, the trouble is lack of sync pulses and not a defect in the oscillator stage. The defect will appear in a portion of the circuit between the output of the sync amplifier and the grid of the horizontal oscillator. On the other hand, if the picture locks, or you find it impossible to obtain a whole single picture, the trouble lies with the horizontal oscillator or horizontal AFC circuits. If with minor adjustment the picture locks and the set appears to be operating properly, it may be that normal aging of tubes and components have caused a small change in oscillator frequency. In this case, no set defect is indicated. However, if very radical changes are required of the horizontal frequency control settings, the defect should be localized.

4. *No Vertical Deflection, but Horizontal Deflection O.K.* – This is indicated on the kinescope screen by a single horizontal line like this:

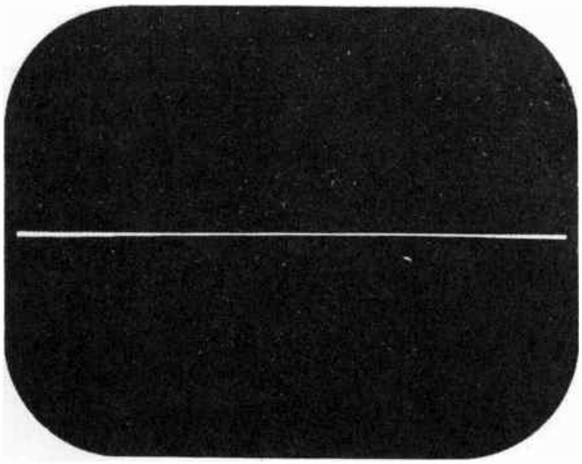

Fig. 25-15

This trouble is generally caused by a defect in the vertical deflection section, which is shown blacked out in Fig. 25-16.

The vertical deflection section consists of the vertical oscillator and the vertical output stages. There are two simple checks by means of which we can determine which stage is at fault. One method is by signal injection as previously discussed. The other method is to measure oscillator grid voltage.

The signal injection consists of feeding a 60 cycle signal to the grid of the vertical output stage. You can do this by putting your finger on the grid of the vertical output tube. An alternate method is to connect a jumper in series with a .05 microfarad (or larger) condenser from the high side of the filament voltage supply to the grid of the output tube. If the vertical output stage is O.K., a pronounced vertical deflection will appear on the kinescope. This indicates that the vertical oscillator is at fault.

A simple voltmeter check will determine if the oscillator is working. This check

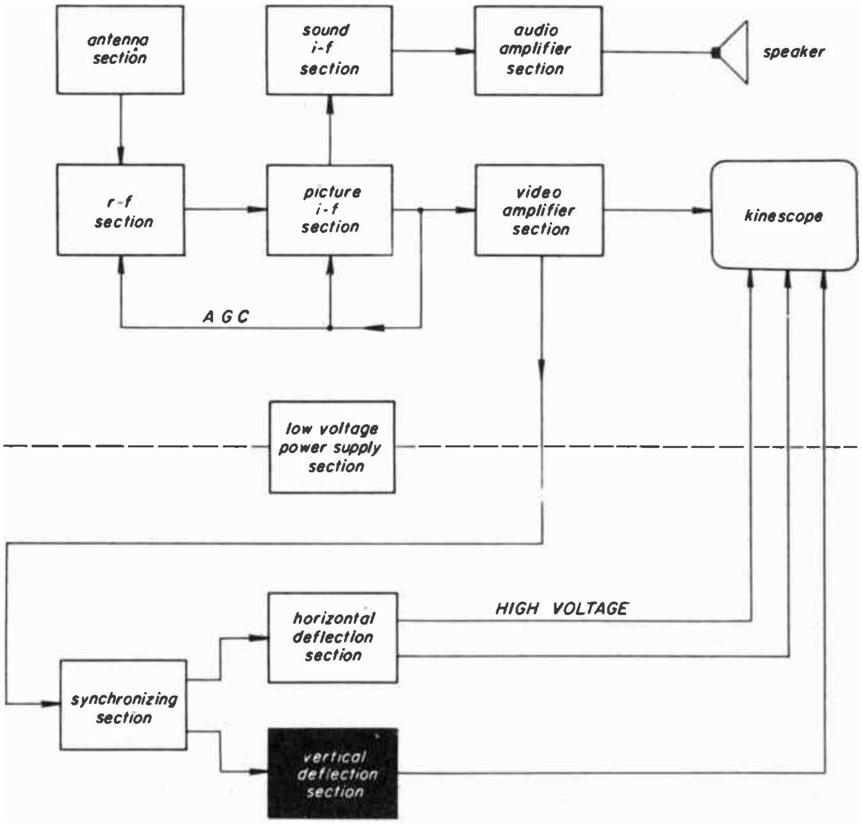

Fig. 25-16

consists of measuring the negative grid bias of the vertical oscillator. Since this negative voltage is generated by the oscillator, it will be present only if the oscillator is functioning.

Sound O.K., But Picture is Weak. – It is possible to determine by examination of the "snow" on the kinescope screen, whether the cause of this trouble is in a section before or after the converter stage. If the picture is very snowy, the trouble is *before* the converter stage, and might be in the antenna section or in the r-f amplifier. On the other hand, if the picture does not become snowy, the trouble lies in a part of the picture channel *following* the converter.

The reason for this is that most of the snow is generated by the converter. If a weak signal is fed into the converter, it is not able to override the snow and the snow shows up very strongly. If a strong signal is fed into the converter, it *can* override the snow and the "snow to signal ratio" remains the same as if the receiver were operating normally.

The conclusions to be drawn from this are:

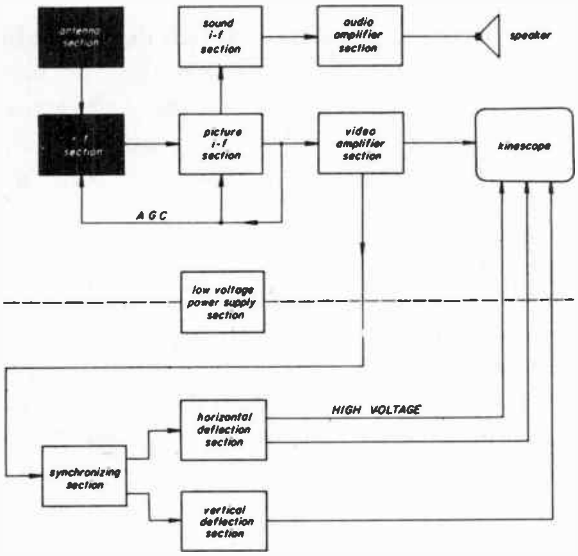

Fig. 25-17

a. If the picture is weak and becomes very snowy, the trouble is in the antenna section or the r-f section (not including the converter). This is illustrated in the block diagram of Fig. 25-17.

b. If the picture is weak but does *not* become snowy, the trouble is in the picture i-f section or the video amplifier section, as indicated in Fig. 25-18.

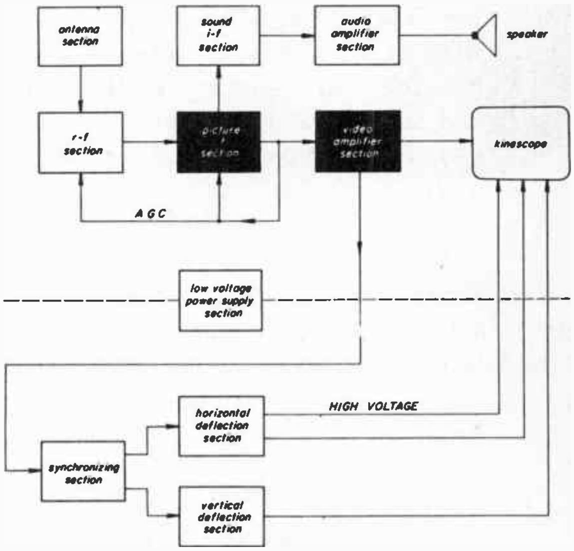

Fig. 25-18

SUMMARY OF TROUBLESHOOTING TIPS

25-5. – In the previous section on troubleshooting, we discussed certain "tips" and short cuts you could use to localize troubles more quickly. Because of their importance, we are going to summarize these tips here:

1. *Signal Injection:* This consists of injecting a signal into a stage of the TV receiver to determine if that section is operating. The signal used here is a 60 cycle voltage, picked up by the body and applied with a finger to the grid in question. This method is conveniently used to:

a. Isolate "no sound" troubles to the sound amplifier or sound i-f section, when the other receiver sections are known to be right. With the volume control turned up full, place your finger on the input to the audio amplifier (or on the center lug of the control). If a loud hum results, the audio amplifier section is O.K. and the trouble must be in the sound i-f section.

b. Isolate "no picture" troubles to the video amplifier or picture i-f section, when the other receiver sections are known to be good. Connect a jumper in series with a condenser from the plate of the audio output tube to the grid of the first video amplifier. Turn the volume control up full and put your finger on the center lug. If a 60 cycle pattern appears on the kinescope, the video amplifier is O.K. and the trouble is in the picture i-f section.

c. Isolate "no vertical deflection" troubles to the vertical oscillator or vertical output stage. Place your finger, or a jumper from the filament supply, in series with a .05 microfarad (or larger) condenser, at the grid of the vertical output tube. If vertical deflection appears, the output stage is O.K. and the trouble lies in the vertical oscillator stage.

2. *Checking Oscillator Bias Voltage:* This test consists of measuring the control grid voltage of an oscillator in the receiver, to see if the oscillator is operating. This voltage is a negative bias that only appears when the oscillator is working. The test is the same for each of the several oscillators, which are:

a. The local (heterodyne) oscillator
b. The horizontal oscillator
c. The vertical oscillator

In each of these circuits, use a high impedance meter to measure the negative bias between control grid and ground. A 20,000 ohms per volt meter is adequate. Since the bias is generated by the oscillator itself, its presence indicates that the oscillator is functioning.

In the case of the local oscillator, an additional check may be made by measuring the mixer grid voltage in the same way.

3. *Snow:* This test consists of observing the kinescope for the presence or absence of snow under certain conditions.

a. With normal raster, but no sound or picture, snow helps to isolate the trouble as follows: If snow appears in the raster we may assume that the converter and all picture stages following are probably O.K. The trouble therefore precedes the converter and may be in the r-f amplifier or antenna sections. If no snow appears, the trouble is in or after the converter stage.

b. Sound O.K. but weak picture. Again the snow tells us whether or not the trouble precedes the converter or follows it. The procedure in localizing is the same as for (a) above.

4. *Detector Voltage Output.* This test consists of measuring the *d-c* output voltage (if any) across the output of either the sound or picture detectors. The presence of such voltage indicates that the stages preceding the detector are operating.

◆

NOTES

NOTES

NOTES

NOTES

TELEVISION SERVICING COURSE

PREPARED BY

RCA INSTITUTES, INC.

A SERVICE OF RADIO CORPORATION OF AMERICA

HOME STUDY DEPARTMENT
350 West 4th St., New York 14, N. Y.

LESSON TWENTY-SIX

TROUBLESHOOTING TECHNIQUES

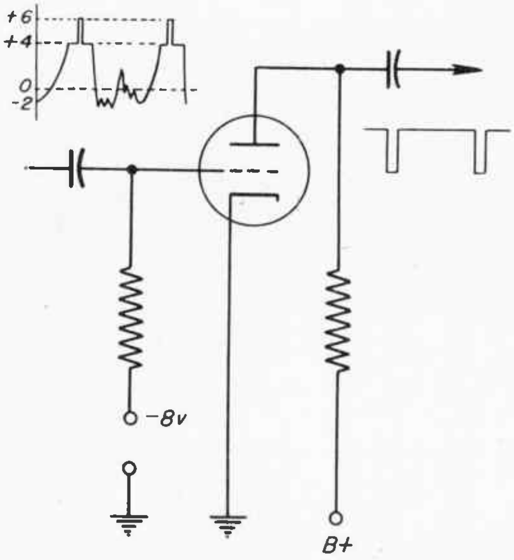

Lesson 26

BASIC CIRCUITS

26-1. In Lesson 25, we discussed some procedures you could use to localize troubles to a *section* of the TV receiver. In this lesson we will discuss the process of localizing a trouble to a specific component of one of the three basic circuits, which make up a TV receiver. In later lessons, we will discuss localizing troubles to components of actual TV receiver circuits.

As we just said, a TV receiver is made up of *three basic types* of circuits. These are:

1. Amplifiers
2. Oscillators
3. Rectifiers

Each of these three basic circuits is repeated a number of times in the receiver, with the amplifiers making up the majority of the circuits. There is an important significance to the fact that there are only three basic circuits as far as troubleshooting is concerned. *Each variation of the three basic types of circuits operates in essentially the same manner.* Thus a knowledge of the basic types will aid you in servicing any of these circuits, even when there are component variations among the stages.

To illustrate how a TV set is divided into its three basic circuits, an expanded block diagram is shown in Fig. 26-1.

In this block diagram, the various stages of the receiver are labeled according to which of the three basic circuits they represent. These designations are all clear cut except for the mixer, which may be considered to be a rectifier and amplifier.

AMPLIFIERS

26-2. In order to lay the groundwork necessary to describe how troubles may be localized to a component or specific

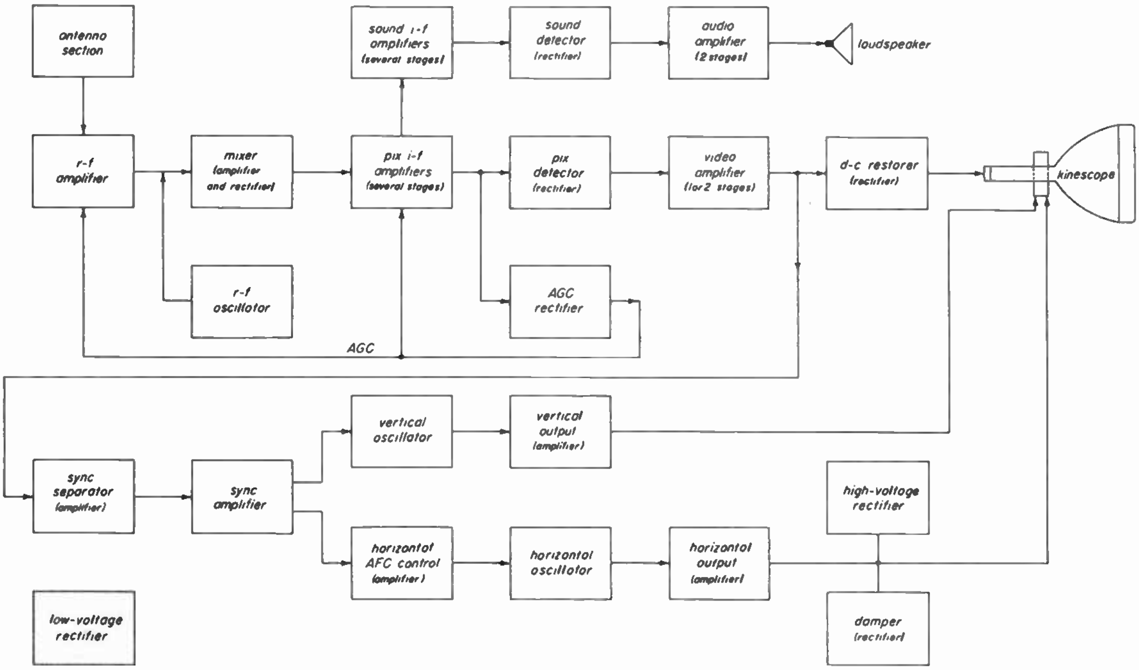

Fig. 26-1

defect, we will first investigate the operation of amplifiers. In general, we may say that an amplifier serves the purpose of increasing either the voltage or the power supplied to its input. Some amplifiers are specifically designed to distort the input wave; these will be considered later.

Specifically, we are first going to examine the operation of a simple triode RC–coupled amplifier. Following this we will take up a pentode amplifier.

The schematic diagram of our simple triode amplifier looks like this.

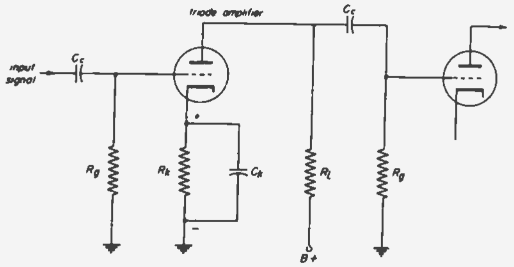

Fig. 26-2

The amplifier consists of a triode vacuum tube and its associated components. At the grid of the amplifier, we find a resistor and condenser combination labeled R_g and C_c.

These components are commonly referred to as the grid resistor and the coupling condenser. The coupling condenser serves to block d-c from a previous stage, while permitting the a-c component of the signal to reach the grid. If the d-c were not blocked by this condenser and were connected to the grid, it would upset the operation of the amplifier. The grid resistor provides a discharge path for the coupling condenser, to prevent undesired charges from accumulating in the coupling condenser. Such charges, under conditions of high peak signals might "block" the tube. Other functions performed by the grid resistor will be mentioned a little later.

For an amplifier tube to operate in the desired manner, it must have the correct bias. The bias of an amplifier tube is a voltage applied between the grid and the cathode. Its polarity must be such that the grid is negative *with respect to the cathode*. This means that we may apply a *positive* voltage to the *cathode*, a *negative* voltage to the *grid*, or both. In the amplifier of Fig. 26-2, we obtain our bias from a positive voltage at the cathode. This voltage is developed by cathode current flowing through cathode resistor R_K. The voltage drop across R_K is such that the cathode becomes *positive*, thus providing the bias. In order to develop an output voltage in an amplifier, we must have a *load* in the plate circuit. The load may take various forms, but in Fig. 26-2, it is the resistor R_L. This resistor connects to B plus in order to supply the desired plate voltage to the amplifier tube.

The Tube Acts As a Variable Resistance. – We know that a plate load impedance is required to develop an amplified signal. Let's go ahead now and see just why this is so. To do this we can consider the tube as being a variable resistance. This is not an entirely new idea, as this concept was discussed previously in Lesson 19. An equivalent circuit of a vacuum tube as a variable resistor is shown here:

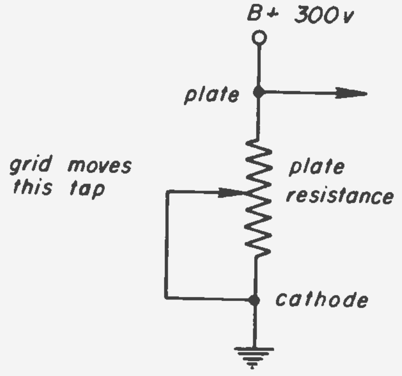

Fig. 26-3

The resistance shown here is actually the plate resistance of an amplifier tube. This resistance will vary according to the actual voltage applied to the grid. For example, if the *grid voltage becomes more positive*, the plate current of the tube increases and the *plate resistance decreases*; if the *grid voltage becomes less positive (or more negative)*, the plate current decreases and the *plate resistance increases*. For this reason we show in Fig. 26-3 that the grid moves the tap on the variable resistance, changing its value in accordance with the grid voltage. In the circuit of Fig. 26-3, we could *not* take an amplified output from the plate. The reason for this is that no plate load resistor is present. The plate current may vary, but the plate voltage stays at the B plus value. Therefore, we see that without a plate load resistor, the tube cannot function as an amplifier. Now take a look at this equivalent circuit:

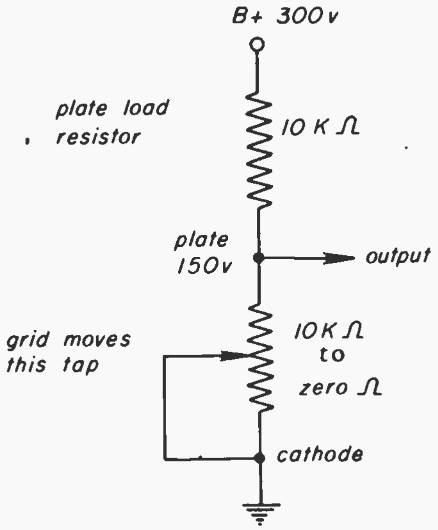

Fig. 26-4

The Amplifier Needs a Plate Load. – Here we have added a plate load resistor to our amplifier. Note very carefully that we now have a *voltage divider* between B plus and ground. This divider consists of the series combination of the plate load resistor and of the plate resistance of the tube. The addition of the plate load resistor now makes it possible to tap off an amplified output from the tube. We can see how this works out with the aid of the following simple examples. Let's assume that in Fig. 26-4, the plate load resistor is equal to 10,000 ohms. Let us further assume that with no signal applied to the grid, the internal tube resistance is also 10,000 ohms. This means that if the B plus voltage is 300 volts, there will be 150 volts at the plate of the tube. This is easy to see because the plate point is *halfway* down on a voltage divider across 300 volts.

Now assume that a signal is applied to the grid and is at its positive peak. This causes additional plate current to flow, decreasing the plate resistance as shown here:

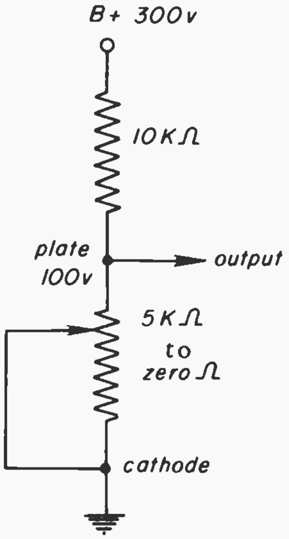

equivalent for positive grid signal

Fig. 26-5

The plate resistance is now 5000 ohms in series with the load resistor of 10,000 ohms. This means that 1/3 of the B plus voltage, or 100 volts is now at the plate. This represents a change of 50 volts at the plate, representing a portion of the amplified signal. Note that a positive grid signal causes a negative going plate signal.

Now let's see what happens when the grid signal goes negative, increasing the internal plate resistance as shown in Fig. 26-6.

In this case we show that due to the negative signal the plate resistance has increased to 20,000 ohms. Now we have 2/3 of the B plus voltage, or 200 volts, at the plate. This is an increase of 50 volts over the no-signal voltage. Note that a

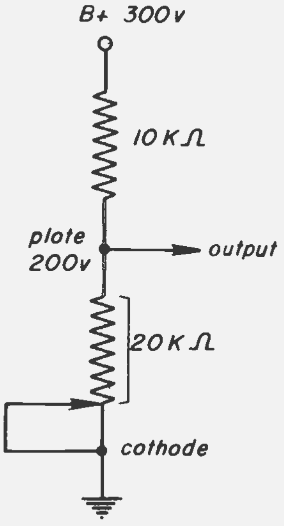

equivalent for negative grid signal

Fig. 26-6

negative grid signal causes a *positive* going plate signal.

Thus we see that the vacuum tube amplifier produces an amplified output in connection with its plate load resistor by acting as a variable voltage divider. With a resistive plate load the plate and grid signals are always of opposite polarity.

The amplified signal is coupled from the plate of the amplifier to the grid of the next stage by means of the coupling network C_c and R_g, which we have already mentioned.

Distortion in the Amplifier. – Now we can go into a little more detail about the amplifier's operation. The first point to consider is the input signal. Most amplifiers in a TV set (but not all), operate with a symmetrical type of input signal. That is to say the positive and negative characteristics of the signal are the same. As an example of a symmetrical signal take a look at Fig. 26-7.

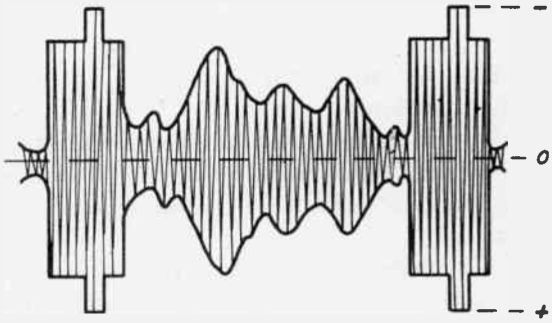

Fig. 26-7

This represents a modulated picture signal as it might be applied to a picture i-f amplifier. Note that, if we draw a line through the center of this wave and call this the zero reference line, that the positive and negative portions are the same. The *amplitude* of this input signal is generally of considerable importance. It must be neither too small nor too large. If too small, the capabilities of the tube for amplification will not be fully realized. If too large, distortion may result. When dealing with signals of a symmetrical nature, such as Fig. 26-7, a simple method is available to determine what the maximum amplitude of input signal should be. The following simple rule applies in general – the *peak* amplitude of the input signal should not exceed the value of the d-c bias voltage. For example, if a certain amplifier normally operates with a bias of 10 volts, the peak amplitude of input signal should not exceed 10 volts. By *peak* amplitude we mean the amplitude from the zero reference line to *either* the positive or negative peak. This is further explained with the aid of this figure:

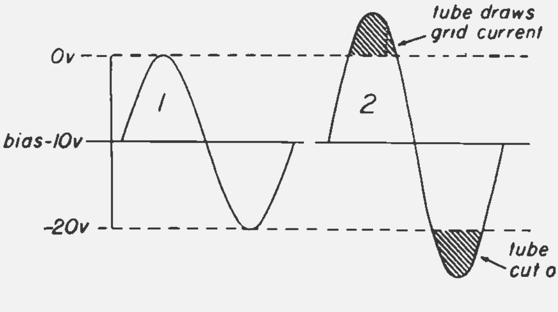

Fig. 26-8

We are assuming that we have an amplifier operating with a bias of 10 volts. When signal 1 is impressed on the grid the amplifier operates correctly and no distortion results. When signal 2 is impressed on the grid it exceeds the peak magnitude of 10 volts. Thus the positive peak now causes grid current and the negative peak cuts off the tube. Both of these will cause distortion of the amplified wave.

TYPES OF BIAS

26-3. We have talked about bias in relation to signal amplitude. Now let's see what types of bias are used in amplifiers. In general, bias is developed by one or more of the following three classifications:

1. Cathode Bias (also called self bias)
2. Signal Bias (also called grid-leak bias)
3. Fixed Bias

Cathode Bias. – With or without the addition of one of the other types, cathode bias is possibly the most commonly used type in TV receivers. An example of cathode bias is shown in Fig. 26-2, where R_k and C_k constitute the cathode bias network. The cathode resistor R_k is designed to be of such a value that the *average* plate current flowing through the amplifier tube will produce the desired voltage drop (bias) across the resistor. For example, if the average plate current in an amplifier tube is 10 milliamperes, and the desired bias is 10 volts, the necessary cathode resistor is found simply, $R = E/I = 10/.01 = 1,000$ ohms. Thus, we see that in the case of cathode bias, we have simply to choose the right cathode resistor for the particular tube.

As you can see in Fig. 26-2, a cathode bypass condenser, C_k, is connected across the cathode bias resistor. This condenser prevents a loss of gain in the amplifier due to cathode degeneration.

Degeneration. – As we mentioned just before, cathode bias is developed by the tube current flowing through the cathode resistor. This bias should be an unvarying d-c voltage if the amplifier is to operate with maximum gain. The reason we use a cathode bypass condenser is to make sure that the bias *does not vary* when signal is applied to the grid. If the cathode voltage does vary due to signal, the amplifier will not operate at maximum gain. This effect is known as *cathode degeneration*, and may be explained simply, as follows: If a suitable cathode bypass condenser is not present across the cathode resistor, and a grid signal is applied, the cathode voltage *tends to follow* the grid voltage, thus reducing its effectiveness. Let's explore this further with the aid of some examples, beginning with this figure:

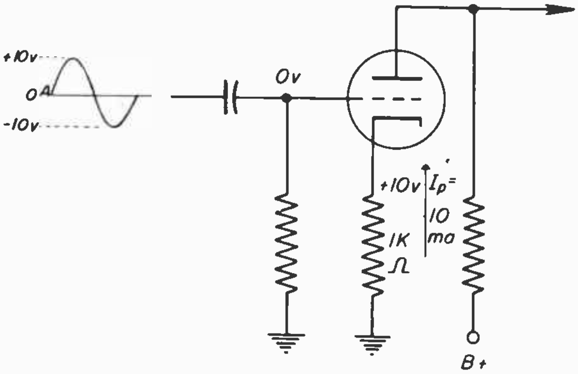

Fig. 26-9(a)

In this example, we have an unbypassed cathode resistor of 1,000 ohms. When the grid signal amplitude is zero, the grid voltage is zero. At this time 10 milliamperes flows through the tube developing 10 volts of bias across the cathode resistor. This is the desired bias and to obtain maximum amplification it should remain constant. Now let's look at this figure.

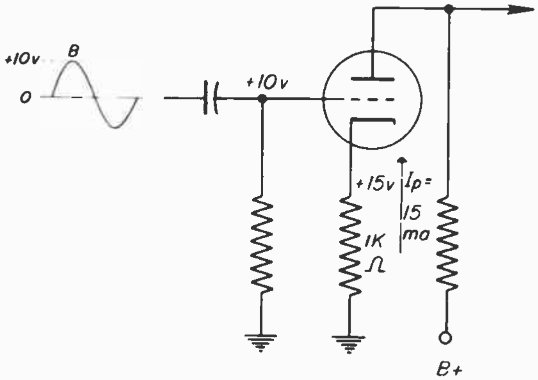

Fig. 26-9(b)

Here the grid signal has progressed to plus 10 volts (point B) and this caused 15 milliamperes to flow through the tube. Notice that the cathode voltage has risen 5 volts, while the grid has gone up 10 volts. Since they both changed in the same direction, the 5 volt rise of cathode voltage effectively cancelled out 5 of the 10 volts rise at the grid. This is true because the effective signal voltage is measured from *grid to cathode*. Since the cathode went up 5 volts, while the grid went up 10, the effective signal at the grid is now only *5 volts*. If we had held the cathode potential constant at this time, the entire grid signal of 10 volts would have been effective. By losing the effect of some of the grid signal, there is less output and therefore less gain from the amplifier.

The same sort of effect occurs on the negative swing of the grid signal, as indicated here:

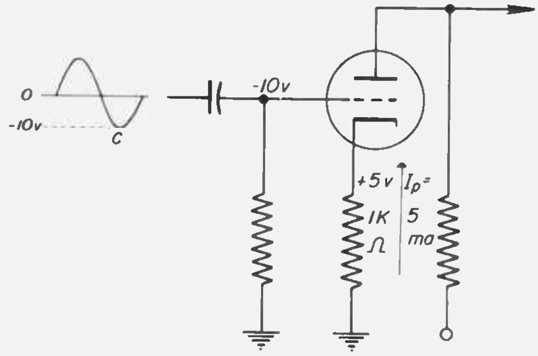

Fig. 26-9(c)

Here the signal has gone to minus 10 volts (point C), reducing the plate current to 5 milliamperes. This causes the cathode voltage to drop to plus 5, or 5 volts *below* the average value of 10 volts. Thus, when the grid voltage goes 10 volts negative, the cathode goes 5 volts in the negative direction. This again has the effect of cancelling out 5 volts of the grid signal and reducing the gain. This effect of reducing the gain due to a changing cathode voltage is what we commonly refer to as "degeneration". (Degeneration may also occur in the screen grid of a pentode as we shall see later.)

Cathode Bypass Condenser. – In order to prevent degeneration in the cathode, and obtain maximum gain, a cathode bypass condenser is used, as shown originally in Fig. 26-2. This condenser must be large enough so that its reactance at the *lowest* operating frequency is much less than the resistance of R_k. The action of the cathode bypass condenser is as follows: In the absence of a grid signal, the condenser charges to the cathode voltage of plus 10 volts, as shown here.

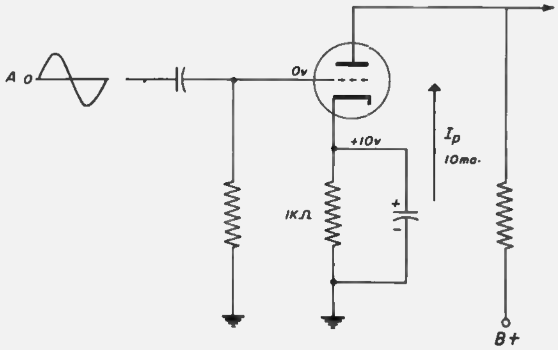

Fig. 26-10 (a)

When the grid signal rises to plus 10 volts, the plate current increases. However, the *additional* plate current does not flow through the cathode resistor but through the condenser as shown here:

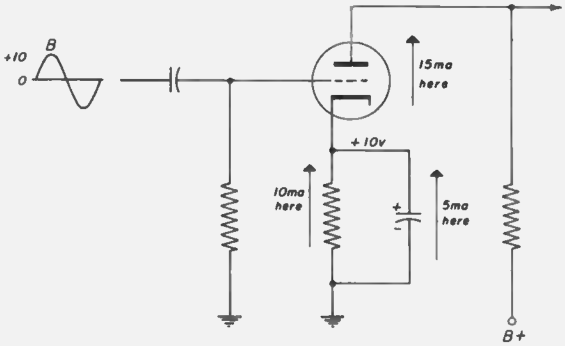

Fig. 26-10(b)

The increased plate current (5 ma.) flows through the condenser rather than the resistor because the condenser has a much lower impedance path for any changing current. The original 10 milliamperes still flows through the cathode resistor maintaining the original bias of 10 volts. It is true that C_k tends to charge up to a higher voltage while current is flowing through it. However, because of its low reactance the increase of voltage across C_k is entirely negligible.

Now let's see what happens on the negative excursion of the grid cycle. In this case the grid goes to minus 10 volts and the plate current drops to 5 milliamperes. This tends to reduce the cathode voltage. However, the cathode condenser prevents the cathode voltage from dropping by furnishing the necessary extra 5 milliamperes to the cathode resistor. This effect is illustrated here:

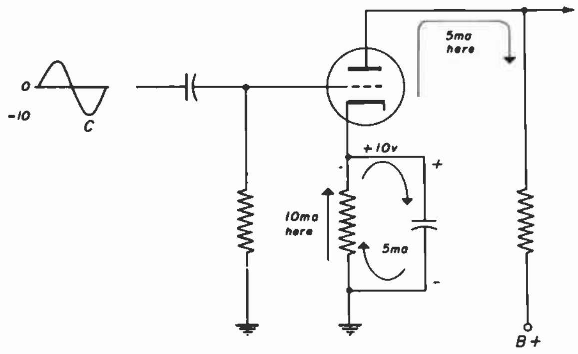

Fig. 26-10(c)

As the plate current drops and the voltage across the cathode resistor tends to fall below the condenser voltage, the condenser C_k starts discharging through R_k as shown by the arrows in Fig.26-10*(c)* The additional current furnished by the condenser, plus the plate current of the tube, adds up to the original 10 milliamperes and so maintains the cathode potential at the original 10 volts. The discharging of the condenser is relatively small, so that the voltage across it is practically unaffected. Thus by a constant process of slight charging and discharging, the cathode bypass condenser maintains a constant cathode potential and constant bias, preventing degeneration.

Signal Bias. – Another type of bias encountered in TV sets is "signal" bias. This is also known as grid-leak bias. Signal bias gets its name from the fact that the bias is derived by rectifying a portion of the grid signal. A basic circuit to illustrate the principles of signal bias looks like this:

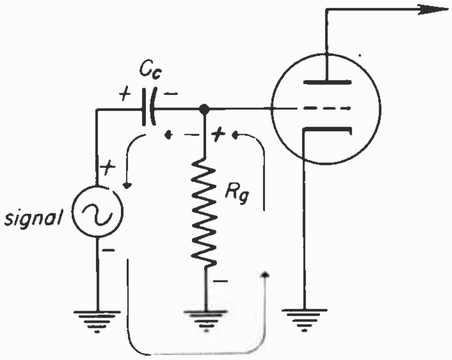

Fig. 26-11

The generator represents the source of a-c signal. We have left the plate circuit incomplete to avoid unnecessary complications. We just said that the bias comes from the rectification of the grid signal. This rectification takes place in an amplifier tube when the grid is driven *positive with respect to the cathode.* The grid then acts as the plate of a diode, with the cathode performing its normal function.

Grid leak bias is developed as follows: A signal is applied to the grid. On its *positive* excursion, the signal drives the grid more positive than the cathode. This causes grid current to flow through C_c and the generating source as shown in Fig. 26-11. The action of this grid current is such as to place a charge in the grid condenser. As indicated in Fig. 26-11, the polarity of this charge is such that it is negative at the grid side. The grid condenser charges for a portion of each positive cycle. For the remainder of the cycle, it discharges as shown in Fig. 26-12, through the grid resistor and the generating source. The discharge current through the grid resistor keeps the grid negative. This discharge is at a much slower rate (longer time constant) than the charging rate through the tube. Thus, the grid condenser charges at a *rapid* rate, for a *small* part of a cycle, and

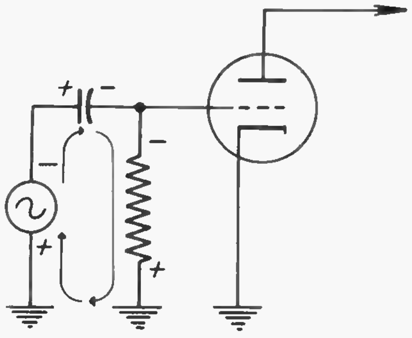

Fig. 26-12

discharges at a much *slower* rate for the remainder of the cycle. The discharge and charge are slight after equilibrium has been established. This means that the voltage across the grid condenser (bias) becomes practically constant.

The *magnitude* of bias depends mainly on two factors:

1. The peak amplitude of signal
2. The size of R_g

Increasing either of these factors will increase the bias. Increasing the peak amplitude of signal will increase the available charging voltage. Increasing the size of R_g, on the other hand, will increase the *percentage* of input signal to which C_c is able to charge. For example making R_g very large (several megohms) will force C_c to charge to the *peak* value of any input signal, thus providing *maximum* bias for that signal.

In circuits using grid leak bias (amplifiers and oscillators) the presence or absence of such bias indicates to us whether or not an input signal is present. This provides us with an important aid in troubleshooting.

Fixed Bias. – The third type of bias is known as fixed bias because the bias voltage is one which is obtained from a source external to the tube and has a *fixed* amount independent of signal strength or tube operation. The source of fixed bias voltages, is invariably a tap on the bleeder of the low voltage power supply. A circuit showing how fixed bias is applied is shown in Fig. 26-13.

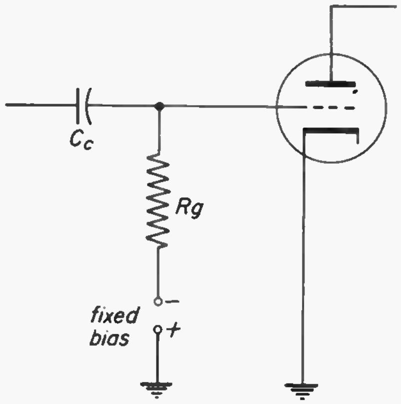

Fig. 26-13

The power supply circuits are not shown here for the sake of simplicity.

No current flows through R_g because of the fixed bias voltage. Therefore, the entire amount of bias voltage from the power supply is applied to the grid, since there is no voltage drop across the grid resistor.

Combination Bias. – Some circuits use a combination of two of the preceding types of bias. These combinations usually consist of:

1. Cathode and fixed bias, or
2. Cathode and signal bias

A circuit using cathode and fixed bias looks like this:

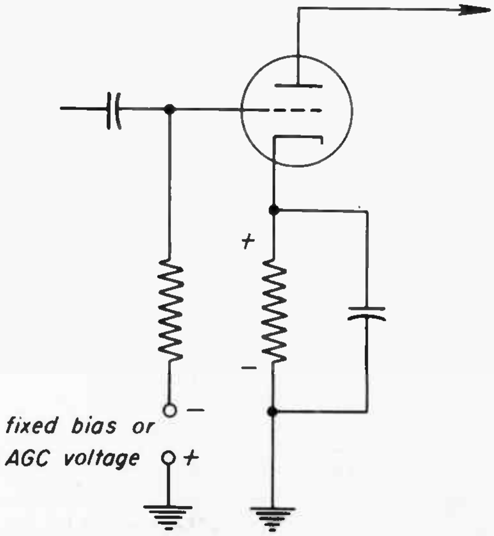

Fig. 26-14(a)

This type of arrangement is sometimes found in some of the picture i-f stages which are controlled by an AGC voltage applied to the grid. A circuit using combination cathode and signal bias, looks like this:

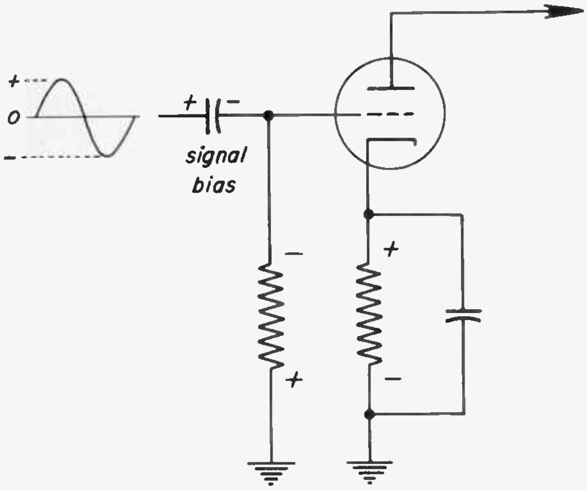

Fig. 26-14(b)

This type of bias arrangement is sometimes found in horizontal amplifier stages and sound i-f amplifiers.

TYPES OF COUPLING

26-4. In the preceding examples of this lesson we have shown the signal coupled into and out of the amplifier by a resistor – condenser combination. This system is commonly known as RC coupling. Two other types of coupling are found in television receivers. These are: (a) impedance coupling, and (b) transformer coupling.

Impedance Coupling. – Let's first take a look at a simplified diagram, Fig. 26-15*(a),* showing an example of impedance coupling.

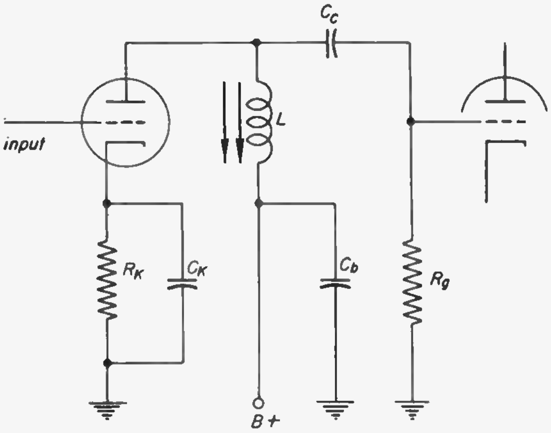

Fig. 26-15(a)

This is actually a form of RC coupling but with some important differences. First, the *load* in the plate circuit is a tuned coil, rather than a resistor. This means the plate load coil presents a *high impedance* to the plate for only a particular band of frequencies. Since the plate load is a coil there is no appreciable d-c drop across it due to the steady plate current. This differs from the case of RC coupling with a resistance plate load, which did not have any appreciable frequency discrimination but produced an appreciable d-c voltage drop in the plate circuit.

There is yet another factor that assumes considerable importance in impedance coupling. This is the effect of the grid resistor R_g in *shunting* the plate coil. This may not be immediately obvious so we will redraw the impedance coupled amplifier, like this:

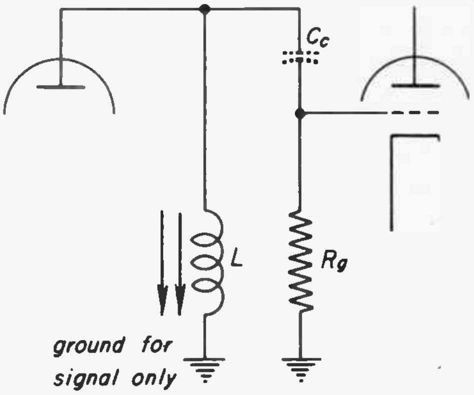

Fig. 26-15 (b)

Note that the bottom of the coil L, is effectively grounded as far as signal is concerned. This "signal ground" is accomplished by the use of the low impedance bypass condenser, C_b, shown in Fig. 26-15*(a)*. Coupling condenser C_c is designed to have a very low reactance at the normal operating frequencies. Therefore, as far as signals are concerned (but not d-c), the condenser may be assumed to have practically zero reactance. Under the above conditions then, R_g is seen to be effectively in parallel with the coil.

This effective paralleling of the resistor and coil is important to the circuit operation. It acts on the coil in such a way as to reduce its effective impedance. This causes the coil to have a *broader* frequency response than if the resistor were not shunting it. The value of resistor is often quite critical. The *lower* the value of resistance, the *broader* is the frequency response of the circuit. This increase of bandwidth is always accompanied by an inevitable *loss of gain*. The gain is lower because the effective impedance of the plate load has been *reduced* by the shunting resistor.

This same shunting effect of R_g on the plate load also occurs in the case of the conventional RC–coupled amplifier, previously described. However, the value of R_g is generally very large here and the shunting effect is usually neglected.

Transformer Coupling. – The third type of coupling found in TV sets is transformer coupling. An example of this is shown here:

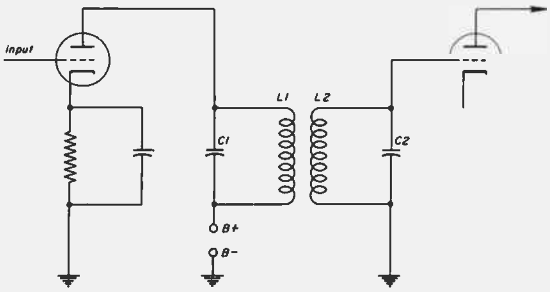

Fig. 26-16

This is a simplified drawing to illustrate the principles involved. In transformer coupling, there is no component connected between the plate of the one amplifier and the grid of the following tube. Therefore, in this type of coupling we have no problem of blocking B plus from the following grid.

Transformer coupling operates in the following manner. In the plate circuit of the amplifier we have a plate load consisting of a parallel resonant circuit, L_1 and C_1. This presents a high impedance to the plate at the resonant frequencies, and some side frequencies. When current flows through L_1 a magnetic field is set up which cuts across the secondary coil L_2. A voltage is induced in L_2 which causes a secondary current to flow in L_2 and C_2. This current develops a voltage across C_2, which is the applied grid voltage of the following tube.

In most cases, the effect of the secondary coil L_2 upon the primary coil L_1 is slight and can be neglected. Since both primary and secondary circuits may be tuned in transformer coupling a greater control of the amplifier frequency response is possible. Another important advantage in transformer coupling is that a "gain" over and above that of the amplifier tube itself, can be realized.

SPECIAL AMPLIFIERS

26-5. Most amplifiers are designed so that they amplify the entire input signal in an undistorted manner. One exception to this is the mixer stage, whose operation we have previously discussed. There are other exceptions to linear amplifiers in TV sets, notably amplifiers dealing with sync pulses. A good example is the sync separator. This is an amplifier which has as its input the entire composite video signal, and as its output, only the sync pulses. There are several ways of operating an amplifier to accomplish this. One method is shown in simplified form in Fig. 26-17*(a)*.

This is an amplifier to which a fixed bias of 8 volts has been applied. The in-

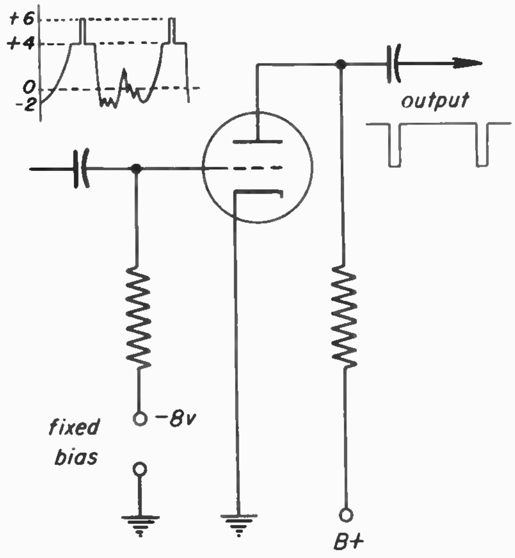

Fig. 26-17(a)

put signal consists of the composite video signal with positive sync pulse polarity. The amplifier must act upon the input signal in such a way that only the sync pulses will appear in the output. This may be accomplished by proportioning the input signal amplitude and the bias so that the tube will only conduct on the sync pulses. In Fig. 26-17*(a)* we show the input signal as it might appear on the grid. Note that the *positive peak amplitude* is 6 volts. The sync pulses start at plus 4 volts and go to 6 volts.

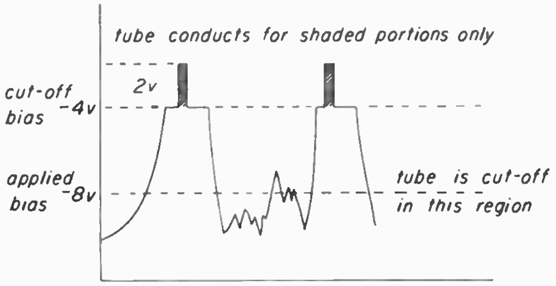

Fig. 26-17(b)

In Fig. 26-17*(b)*, we can see more clearly how the amplifier operates. The applied bias is 8 volts, but the *cut-off* bias for this tube is only *4 volts*. As the signal is applied and begins to go positive, the tube remains cut off until the signal amplitude rises 4 volts. This just overcomes the cutoff bias and permits the tube to begin conducting. Note that the point at which the tube begins to conduct, is at the bottom of the sync pulse. The sync pulse starts at 4 volts and rises two volts additionally. This entire two-volts pulse is passed by the tube and amplified as shown in Fig. 26-17*(a)*. However, when the signal voltage drops below 4 volts the tube again cuts off and there is no output. Thus, this special amplifier (sync separator) amplifies only the sync pulses and rejects the remainder of the composite signal.

PENTODE AMPLIFIERS

26-6. Up to this point, we have discussed the operation of amplifiers, based upon the example of a simple triode type. Many of the amplifiers in a television set are pentodes. Some of these are; (a) sound and picture i-f amplifiers (b) audio output and (c) horizontal output stage. Thus, before we go into the procedure for troubleshooting amplifiers, we must see how pentode amplifiers differ from triodes.

A schematic diagram of a typical pentode amplifier with a resistance plate load is shown in Fig. 26-18.

Before we see how a pentode amplifier differs from a triode type, let's first see how they are the same. The following factors apply equally to both types:

1. The way in which the tube amplifies, as explained previously in the discussion of the plate load, applies equally to the pentode.
2. The various types of bias are also applicable to the pentode.
3. Input signal considerations are the same.
4. Degeneration problems are the same except that there is an additional possibility for degeneration in the screen grid circuit.

In short, triode and pentode amplifiers are basically alike. However, there are some important advantages of using pentodes for amplifiers instead of triodes, for certain applications. In general, pent-

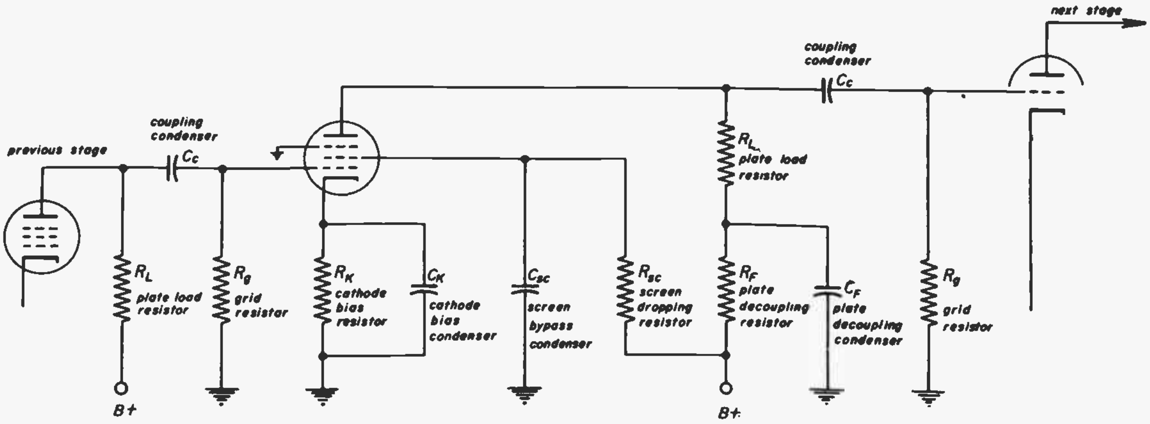

Fig. 26-18

odes are capable of delivering *more gain* than triodes. This is because:

1. Pentodes may have lower values of interelectrode capacitance.
2. Pentodes may have higher values of amplification factor, or "mu".

The meaning of amplification factor is not always too clear. Let's take out a moment at this point to try to clarify its meaning. In our discussion of triodes before, we saw how a change of grid voltage caused the plate current to change. This occurred because of the change of internal plate resistance. While we didn't mention it at the time, we can change the plate current by leaving the grid voltage fixed and changing the plate supply voltage. We don't normally do this in actual amplifier operation but it gives us a method of measuring the so-called "amplification factor" of a tube. The amplification factor (mu) is a number which gives us the maximum theoretical gain of an amplifier tube. This maximum theoretical value of gain is never realized in practical circuits but helps us to determine how much gain we can get from a particular type tube using practical circuits. The way we measure the amplification factor of a tube is as follows: vary the grid voltage a small amount and note the resultant change of plate current. Then with the original grid voltage fixed, vary the plate voltage an amount necessary to cause the same change of plate current as before Divide the change in plate voltage by the change in grid voltage. The resultant figure is the amplification factor of the tube. For example, if a grid voltage change of 0.1 volt changes the plate current as much as a plate voltage change of 10 volts, the "mu" is 100, (or 10 divided by 0.1). This answer tells you how much more effective the grid is in controlling plate current, than the plate is and thus indicates how well the tube may amplify. In general, voltage amplifier type pentodes have higher values of amplification factor than voltage amplifier triodes. This means that when we desire to have larger values of voltage amplification, pentodes are used.

A Pentode Circuit. – Let's now take a closer look at Fig.26-18 to see how the pentode circuit differs from that of the triode. The pentode has two additional grids as compared to a triode—the screen grid and the suppressor grid. The screen grid was originally introduced to reduce internal plate-to-grid capacitance, and thus reduce the possibility of the amplifier breaking into oscillation. The plate-to-grid capacitance provided a path for energy to feed back from the plate to the grid which might produce self-sustained oscillations. The introduction of a screen grid greatly reduces the possibility of oscillations. However, the screen grid introduces some new circuit complications. This is because the screen grid must be operated at a positive potential. Furthermore, the positive potential is generally less than the B plus source and less than the plate voltage. The desired screen potential is generally obtained by connecting the screen grid to

B plus through a screen dropping resistor (R_{sc}, in Fig. 26-18). Since screen grid current flows through R_{sc}, we can get practically any value of screen voltage we want by selecting the proper value of resistor.

Having connected a screen dropping resistor in the circuit, we are faced with the possibility of having *degeneration* occur in the screen grid circuit. The effect of screen grid degeneration is similar to that of cathode degeneration – that is, a loss of gain. To prevent screen grid degeneration, we do what we did for the cathode circuit: bypass the screen resistor with a condenser. This condenser is labeled C_{cs}, in Fig. 26-18.

Screen Grid Degeneration. – We saw previously how the control grid in a triode was able to control the plate current and how degeneration was produced between the control grid and cathode. Well, the screen grid is also able to control the plate current. However, its degree of control (transconductance) is considerably less than that of the control grid. The reason for this is that the screen grid is much farther from the cathode than the control grid. Since the screen grid is able to control plate current to some extent, it is possible to have screen grid degeneration, if the screen voltage is made to vary in a direction opposite to that of the control grid.

Let's take an example to see how this works out. Assume there is a screen resistor present, but no screen bypass condenser. When the control grid goes more *positive* with signal, the plate and screen currents both increase. The increased screen current produces an increased drop in the screen resistor. The result is a *decreased* screen voltage. This decreased screen voltage acts to limit the increase of plate current. Instead of the plate current increasing by say, 10 milliamperes, it only increases now by 7 milliamperes. The lesser increase of plate current produces a smaller output voltage, and a resultant decrease of gain. Thus we have a degenerative effect if we do not bypass the screen grid resistor.

To prevent screen grid degeneration we add the screen bypass condenser. This has a much lower impedance than the screen resistor and functions the same as the cathode bypass condenser, previously described. It prevents the screen voltage from changing due to signal and thus maintains the gain of the pentode. For the purpose of trouble shooting, it is important to note, that if either the screen grid or cathode bypass condensers opened up, the result would be a *loss of gain* of the stage.

Suppressor Grid. – The second additional grid in the pentode is called the *suppressor* grid. This grid was added to overcome the effects of "secondary emission" from the plate. When electrons strike the plate at high velocity, they knock out other electrons from the plate structure. These are called "secondary" electrons and their emission from the plate is known as "secondary emission". The secondary electrons have a tendency to collect in a "cloud" in the vicinity of the plate, forming a space charge. This space charge tends to retard the plate current electrons going to the plate. The suppressor grid is usually connected to either ground or cathode and is therefore *highly negative with respect to the plate.* This relatively negative suppressor grid has the effect of forcing the secondary electrons to return to the plate, thus preventing the space charge from forming. Electrons from the cathode are still attracted to the plate because of the positive potential of the screen grid.

DECOUPLING FILTERS

26-7. A TV receiver consists of a number of amplifier and oscillator stages, all of which operate from a common low voltage power supply. The power supply has a certain amount of impedance which is common to all these stages. As a result it is possible for signals of one stage to feed into another stage and cause undesired oscillations or other interference. To prevent this coupling through the power supply, certain stages are provided with a decoupling filter similar to the one shown in Fig. 26-18(R_f - C_f). While we show only this filter in the plate circuit, such filters may also appear in control grid, screen grid and even filament circuits. As you can see in Fig. 26-18, a decoupling filter consists only of a resistor and a condenser. The resistor R_f is placed in series with the voltage source, while the condenser C_f is connected from the top of the resistor to ground. The action of common coupling may be made clearer with the aid of this diagram:

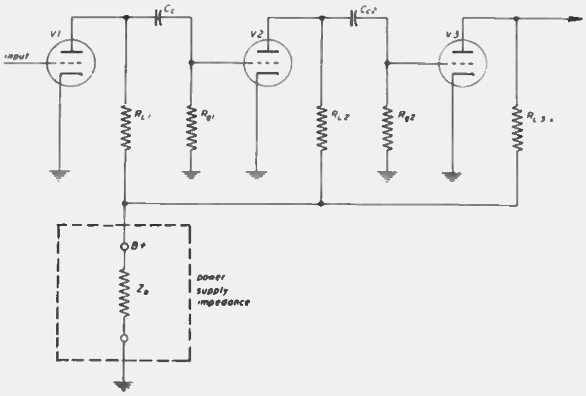

Fig. 26-19

Here we have 3 amplifiers which get their plate voltage from a common source. Let us consider the ouput signal of V3. This is divided across R_{L3} and Z_b, power supply impedance, with only a small percentage appearing across Z_b. This signal across Z_b may feed back through R_{L1}, and R_{g1} to the grid of V2. It arrives here *in phase* with the original signal and reinforces it. Thus oscillations may be set up in V2 and V3 because of the common impedance coupling effect of Z_b. Now let's look at Fig. 26-20 to see how we can prevent this from happening.

A decoupling filter, R_f-C_f, has been added in the plate circuit of V3. This filter prevents output signals from V3 from developing across Z_b and thus eliminates feedback due to this source. The decoupling filter operates in the following manner. The resistor R_f and condenser C_f are so proportioned that the reactance of C_f is very much less than the resistance R_f. The signal at the bottom of R_{L3} "sees" two paths, a high impedance path in R_f and a low impedance path in C_f. Thus, the signal is bypassed to ground through C_f and does not reach the power supply.

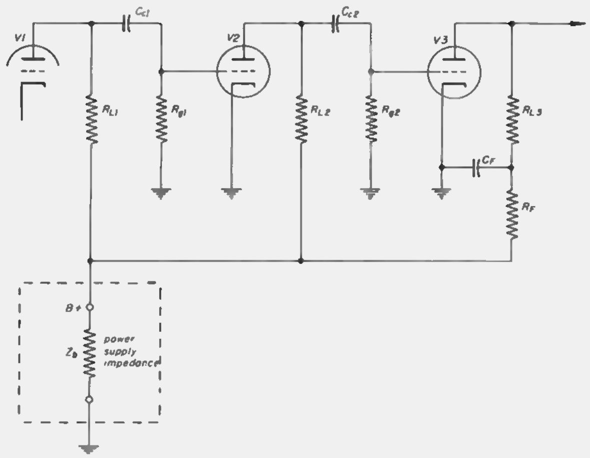

Fig. 26-20

Similar filters may be found in control grid and filament circuits in some TV sets.

A-C AND D-C PATHS

26-8. Now that we have looked over the circuit of a typical pentode amplifier, let's examine it again with a slightly different emphasis in mind. That is, to trace out the signal paths and the d-c paths. We can do this with the aid of the diagram given in Fig. 26-21.

The darker lines show the paths of the a-c signal. Light lines show the d-c only. Thus the a-c signal comes in through C_c and R_g to the grid of the amplifier tube. The a-c signal is amplified by the tube and plate load action. Thus R_L is part of the a-c signal path. The bottom of R_L is connected to condenser C_f. This *grounds* the a-c signal. *Only* d-c then flows through R_f. In the screen grid circuit condenser C_{sc} is the a-c signal path. It *grounds* the a-c signal of the screen grid. In the cathode circuit, C_K is the path of the a-c signal, with

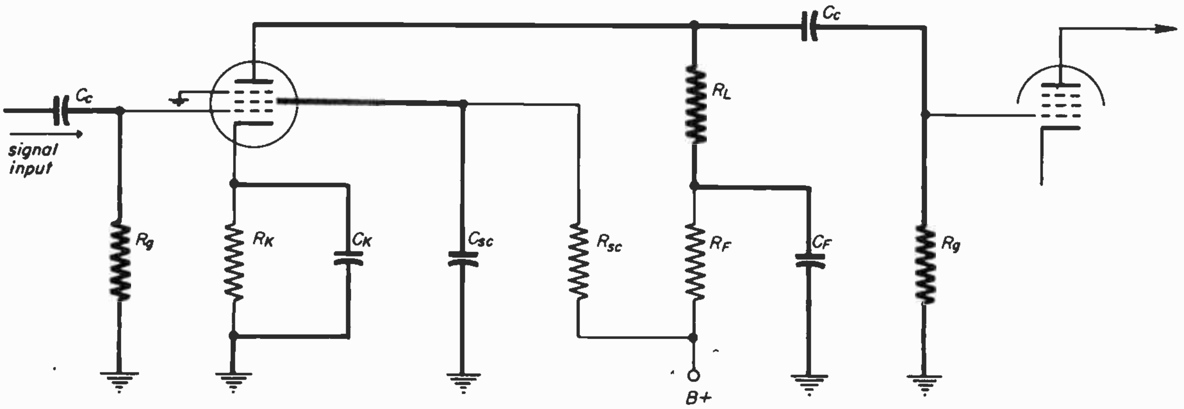

Fig. 26-21

only d-c flowing through R_K. Thus, we see that *three* resistors have d-c only. These are, R_K, R_{sc} and R_f. *One* resistor has a-c only. This is R_g.

Finally, one resistor has both a-c and d-c. This is the plate load R_L. All condensers have both a-c and d-c imposed. These condensers pass the a-c but block d-c.

The a-c in R_L is actually a fluctuating d-c signal as previously explained in the discussion of the load resistor. However, when the fluctuations of d-c pass a condenser such as C_c, the resultant signal across R_g becomes *pure a-c*.

FUNCTIONS OF THE COMPONENTS

26-9. In concluding our discussion of the functioning of amplifiers, we are going to present a summary of the functions of each component in our typical pentode amplifier. Refer to Fig. 26-18 for the schematic diagram.

Coupling Condenser (Cc). – In general this is required to block d-c plate voltage of the preceeding stage from the grid of the next amplifier. It blocks the d-c while passing the signal (a-c component) to the grid of the next tube. If we don't block d-c from the grid, it will change the bias of the amplifier and may produce undesired distortion of the signal.

There are several reasons why we need a grid resistor in our amplifier. As we mentioned before, the grid resistor provides a discharge path for the coupling condenser C_c. If a high *peak* voltage signal is applied to the grid, the grid will usually draw current, charging up C_c. If no grid resistor is present, the charge in C_c may be high enough to bias the amplifier beyond cutoff. This effect is generally known as "blocking", since it prevents the amplifier from operating.

Another reason we need a grid resistor is to reduce pickup in the grid circuit, of extraneous signals. Without a grid resistor, the grid impedance becomes extremely high. This makes the grid susceptible to voltage pickup of various stray signals. Such signals as hum, sync, and oscillator voltages may produce considerable interference due to grid pickup. In the case of 60-cycle hum pickup, this is generally only important in the first stage of a high gain amplifier. For instance, if the grid resistor of the audio *voltage* amplifier should open up, we might get appreciable hum pickup.

A third function of the grid resistor is to provide a d-c voltage path from grid to cathode. Without this d-c path it would not be possible to control the grid-to-cathode bias. Not being able to control the bias means that we could not fix the operating point of the amplifier.

Cathode Bias Resistor (R_K). – As its name implies, this resistor develops the the desired bias for the amplifier when cathode current passes through it. The value of this resistor is therefore very important in determining the operating characteristics of the amplifier.

Cathode bias condenser (C_K). – The function of this condenser is to maintain the cathode bias at a *constant value*, with or without an applied signal. If this condenser were missing, or open, the bias would vary with the signal and a loss of output would result.

Screen Dropping Resistor R_{sc}. – This resistor reduces the B plus voltage of the power supply to the value desired at the screen grid.

Screen Bypass Condenser C_{sc}. – This prevents variations in screen grid voltage, when a signal is applied to the control grid. Such variations cause screen grid degeneration and result in a loss of gain in the amplifier. Thus, an open screen bypass condenser results in a reduction of amplifier gain. The combination of R_{sc} and C_{sc} also acts as a decoupling filter. This prevents signals present at the screen grid from feeding into other stages, through the power supply.

Plate Load Resistor R_L. – This resistor is required, in order to develop an amplified output signal. Variations of plate current cause variations of plate voltage to appear, because of this resistor. The variations of plate voltage represent the amplified signal.

Plate Decoupling Filter R_f-C_f. – The purpose of this condenser-resistor combination is to prevent any of the plate signals from getting into the power supply. If this happened, the plate signals might feed back to another stage and cause undesired oscillations. The decoupling condenser C_f is an *a-c ground* for the signal. If this opens up, the decoupling resistor becomes part of the plate load and may change the gain of the amplifier.

Now that we have seen what amplifiers should do, we are going to see what happens when they don't do what they are supposed to. We are also going to find out how various defects may be localized by means of the voltmeter.

TROUBLESHOOTING AMPLIFIERS

26-10. Many servicemen make it a practice of carrying a multimeter to each service job. Therefore, we are going to discuss methods of troubleshooting amplifiers with the aid of the multimeter. Later on we will see how to use the multimeter in troubleshooting oscillators and rectifiers.

After the trouble has been localized to a section of the receiver, the specific defect causing the trouble can be considered in two general classes – those that change the d-c operating voltages and those that do not. Troubles that do not change the d-c voltages usually interrupt the signal path. Finding the defective part here is a problem of knowing what components can interrupt the signal path without changing the d-c voltages. You can use the multimeter to locate a defective component that changes the d-c operating voltages.

What is "Normal" Voltage. – Suppose we have a TV set to service and we think that the plate voltage of one of the amplifiers is too low. How do we know that the reading *is* too low. Well, we must determine this fact by comparing the reading we get with the "normal" reading for this amplifier. How do we know what *normal* is? There are several methods of determining this, two of which are:

1. Check reading given in the schematic diagram or voltage chart.
2. Compare reading with that of another receiver of the same type.

In the "fine print" on schematic diagrams, you may determine such things as the type of meter that was used for the indicated voltages, whether or not there was an input signal, if some control had to be set a special way and other important information.

In addition it is usually stated that voltages may vary as much as plus or minus 20 per cent, with a 117 volt a-c supply. If the meter you are using has a lower impedance (ohms-per-volt rating) than the one specified in the schematic readings, or voltage chart, you may find that certain readings are low even though the set is operating normally. In general you will have such difficulties only when measuring voltages in high resistance circuits.

The best thing to do is take the meter you will be using and measure the voltages on a good TV set. Compare the readings you get with those given in the schematic. Note which circuits give relatively unchanged readings and which circuits are definitely affected by the impedance of the meter. As we said, only high-resistance circuits will give you any difficulty on this score.

If the line voltage is other than 117 volts, you may have greater deviations than 20 percent and still get normal operation.

Another way of finding out what the "normal" reading should be, is to compare it with a receiver of the same type, which is known to be in good operating condition. Servicemen usually make this comparison when new models first appear.

Amplifier With Plate Voltage Low. – Suppose we get a TV set to service and we determine, by comparison with the *normal* reading, that the plate voltage is actually considerably less than it should be. This may be the result of:

(a) Decreased supply voltage.
(b) Low plate voltage may also result from some condition that has upset the voltage divider relationship between the internal plate resistance and the plate load, due to a defective component or tube, or by incorrect bias applied to the tube.

Low Supply Voltage. – It is possible that the low plate voltage is caused by the fact that one of the taps on the bleeder resistor of the low voltage power supply is not delivering the rated voltage. This may be determined by measuring the voltage at the B+ side of the plate load R_L. Also measure the supply voltage as it is applied to another stage of the receiver. If you also get a low reading here, it is time to suspect the power supply. However, if the voltage reading on another stage is normal, this indicates trouble in the R_f-C_f decoupling filter of the defective stage.

Defective R_f-C_f Reduces Plate Voltage. This form of supply-voltage trouble does not originate at the low voltage power supply. Consider this diagram:

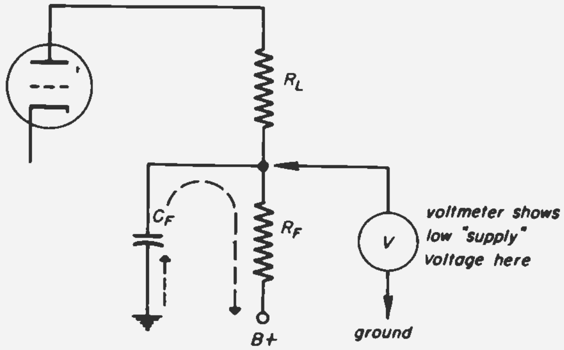

Fig. 26-22

A particular defect in either R_f or C_f could cause a low plate voltage reading by reducing the available supply voltage to R_L. The voltmeter in Fig. 26-22 would show a low reading at the junction of R_f and R_L, but a correct reading at the B+ terminal. This could be caused by an increase in the value of R_f. You can check with the ohmmeter. It could also be caused by a leaky or shorted C_f. Disconnect one side of C_f and check with the ohmmeter. A defective condenser here would cause additional current to flow through R_f, as indicated by the dotted arrows in Fig. 26-22, thus reducing the voltage available for R_L.

High Value of R_L Reduces Plate Voltage. – A second factor that might cause a low plate voltage reading is an increased value of the plate load resistor, R_L. Heat and normal aging sometimes cause this to happen.

As shown in Figs. 26-4, 26-5, and 26-6, the actual d-c voltage at the plate at any instant is determined by the constants of a voltage divider made up of the tube's internal plate resistance (r_p) and the external plate load resistor R_L. In the event that the value of R_L increased appreciably, the original voltage divider distribution would shift with more voltage developed across R_L and less across r_p. Thus, a low plate voltage reading would result. The value of R_L can be checked with the ohmmeter.

Low R_p Reduces Plate Voltage. – The other part of the voltage divider consists of the internal plate resistance, r_p, of the tube. What could cause r_p to decrease? There are two possibilities: The tube is bad, or a defective component makes the tube conduct too much current. If the trouble is due to a defective tube, substitution with a tube known to be good will eliminate this possibility very simply and quickly. If the tube is good, the trouble is in one of the other components of the circuit.

Shorted Output Coupling Condenser. – A shorted output coupling condenser, C_c, usually causes a condition of low plate voltage. One possibility is shown here:

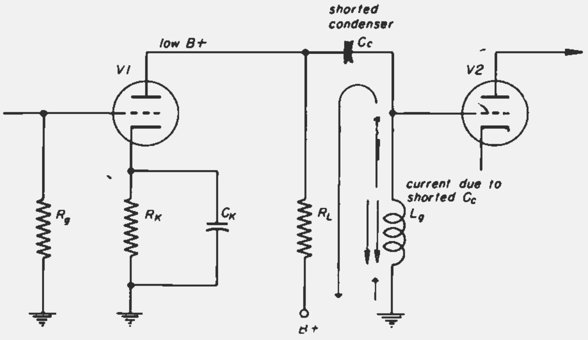

Fig. 26-23

This shows a resistance plate load, and a tuned coil (L_g) in the grid circuit. The resistance of the coil is very low. If C_c should short, or become very leaky current would flow as shown by the arrows. The subsequent drop across R_L reduces the plate voltage to a low value. Even if the input circuit has a high resistance R_g, instead of the coil L_g, the plate voltage of the preceding tube could be reduced in the same way. R_g would be shunted by the low-resistance current path from cathode to grid through the tube when it draws grid current because of the positive grid voltage caused by the shorted coupling condenser.

A quick check can be made to determine if C_c is at fault. Pull out the tube V1. If the plate voltage of V1 does not jump up immediately to equal the supply voltage, C_c is at fault.

Decreased Bias Causes Low Plate Voltage. – A decrease of bias can cause the plate resistance, r_p, to drop. Bias may be measured with the voltmeter and checked against the normal value. In the case of cathode bias, a decrease of cathode resistance, or a shorted or leaky cathode bypass condenser may bring about this condition. These components may be checked with the ohmmeter, always remembering to disconnect one side of the condenser first. A decrease of *fixed* bias may be due to a defect in the low voltage power supply and you will have to check back there with the voltmeter.

A special consideration exists if all or part of the bias is grid-leak signal bias. In this case, it is possible to have a decrease of bias when *no defect* exists in the amplifier. This could be caused simply by the fact that the input signal amplitude is too low. In this case the defect is in a preceding stage

You must be careful when interpreting the measured value of signal bias because grid-leak bias circuits usually have high resistance. Even a 20,000 ohms-per-volt meter may show an abnormally low reading when everything is normal. It is best to use the *highest* voltage scale possible; with such a meter, to get the least error in your reading. In the case of an electronic voltmeter or similar meter, you can use a low scale safely because all the d-c scales have the same high input impedance.

For any type of grid bias, if the coupling condenser C_c *in the input circuit* of the grid is shorted or leaky, the resultant positive voltage in the grid circuit will decrease the negative bias.

Plate Voltage May Become Negative.— A condition of excessive plate current which is usually caused by low bias, may cause a *negative* voltage to appear at the plate if the grid and cathode are returned to a negative voltage instead of ground. A simple circuit showing this possibility is given here.

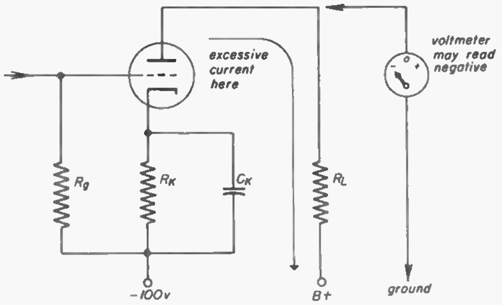

Fig. 26-24

We have the same old voltage divider relationship between tube and load here. However, the bottom of the voltage divider is returned to a negative potential rather than ground. Thus, if the internal plate resistance becomes low enough because of excessive plate current, a negative voltage may actually appear at the plate. This condition could also be caused by a very radical increase in the value of R_L, or by a radical decrease in the positive voltage supply.

You can appreciate from the foregoing, that there are actually a number of things that can cause low plate voltage in an amplifier. Be sure to keep all of these in mind as the defect may be any one or a combination of these possibilities.

Plate Voltage Equals Supply Voltage.— Now that we have seen what may cause the plate voltage to be too low, let's figure out the causes of excessively high plate voltage, *as compared to normal.* In general, this condition may be caused by an increase of power supply voltage, which is generally the result of shorted or changed bleeder components.

As was the case when the plate voltage was too low, abnormally high plate voltage may be caused by a defective component or tube, or by incorrect bias. In other words any factor which upsets the voltage divider relationship of the tube and load, in the opposite direction to the previous example of low plate voltage will cause the plate voltage to rise above normal.

Let us first consider the case where we measure the plate voltage and find it equal to the B plus supply voltage, as illustrated here:

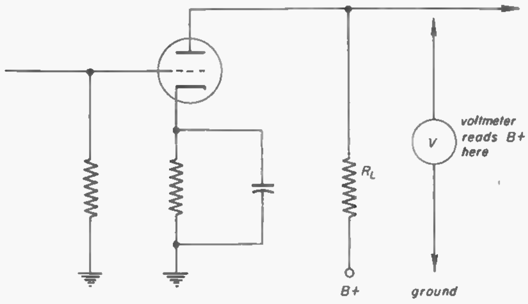

Fig. 26-25

This fact instantly gives us an important clue. No plate current is present in the amplifier circuit. A shorted plate load resistor R_L would, of course, put full B plus voltage on the plate, but this is very unlikely. The usual tendency of resistors is to *increase* in value due to normal aging. If a resistor decreases radically in value, this is generally caused by another component failure drawing excessive current through the resistor.

(We might point out here, that if the plate load is a *coil*, the plate voltage is normally close to B plus. This happens because the d-c drop through the coil is negligible, due to its low resistance.)

Having eliminated the plate load resistor, this leaves the tube proper and its bias circuits. The most obvious tube trouble resulting in zero plate current would be burned out filaments. Of course this is easily checked by visual inspection with a glass tube, or feeling the tube to find out if it is warm. If the filaments don't light up, there's the trouble. Other tube defects, such as open elements may cause this trouble, so substitute a good tube to check. Poor socket pin connections is another possibility which should be checked. Assuming the tube and socket to be all right another possibility is an open cathode resistor or open cathode circuit. Any discontinuity in the cathode circuit will prevent plate current from flowing.

A rather unusual thing may happen with an open cathode, when measuring cathode voltage with a voltmeter. You may actually get a cathode voltage reading even though the cathode circuit is completely open. This possibility is illustrated here:

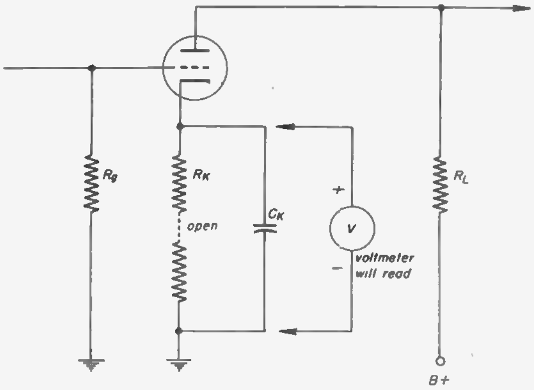

Fig. 26-26

What happens here is that the resistance of the meter is shunted across the open resistor, completing the circuit. Thus, even though the cathode circuit is open, we read cathode bias. This cathode bias reading will usually be somewhat *higher* than the normal voltage, and this is a good clue. However, the cathode bias can never be higher than the grid *cut-off* voltage for the tube. There shouldn't be too much difficulty in determining that the cathode circuit is at fault. If you measure B plus at the plate, it is plain that no plate current, or cathode current is flowing. Then if you find you can measure cathode voltage (and current), you should immediately conclude that your meter is completing an otherwise open cathode circuit.

Cut Off Bias. – Another cause of having the plate voltage equal to supply voltage is the presence of cut-off bias on the tube. True cut-off bias can come only from a fixed source which is independent of the plate or grid current of the tube. Thus, if a tube is operating from fixed bias and the source of bias voltage changes sufficiently negative, the tube may be completely cut off. With no plate current flowing, the plate voltage goes to B plus.

You cannot cut off a tube with cathode bias, but you can come pretty close to it. For instance, if the cathode resistor should increase greatly in value, the bias would approach cut off value, but not reach it, and the plate current might be so small practically the full B+ value would appear at the plate.

Plate Voltage Higher Than Normal. – If the plate voltage is appreciably higher than normal, but not high enough to equal the B plus voltage, we know that some plate current is flowing and that there are no *open* circuits in the amplifier. The causes of this condition are basically the same as when the plate voltage went up to B plus. Accordingly we shall simply list these causes here, without too much discussion.

1. Decreased screen grid voltage. This could be caused by an increased value of the screen resistor, or by a leaky screen bypass condenser. The plate voltage rises here, because the smaller screen voltage reduces the magnitude of plate current flowing through the load resistor.
2. Defective tube.
3. Excessive cathode bias, due to a cathode resistor which has increased in value.
4. Excessive fixed bias, due to a change in the components of the bias voltage divider.
5. Excessive signal bias. This may be due entirely to an excessively high peak signal input. This does not have to be a normal signal, but could consist largely of noise or other extraneous voltages. The value

of R_g also determines the amount of signal bias. An increase of R_g may cause a greater signal bias to appear. (This last factor is not important if the original value of R_g is quite large, say 5000,000 ohms or more.)

6. Decreased value of plate load resistor R_L, caused by external short.
7. Decreased value of plate decoupling resistor R_f, caused by external short.

Negative Plate Voltage. – Some amplifiers in certain TV receivers are arranged so that the grid and cathode are returned to a negative potential of about 100 volts or so. In this case, a peculiar plate voltage indication may arise with the voltmeter. Consider this diagram:

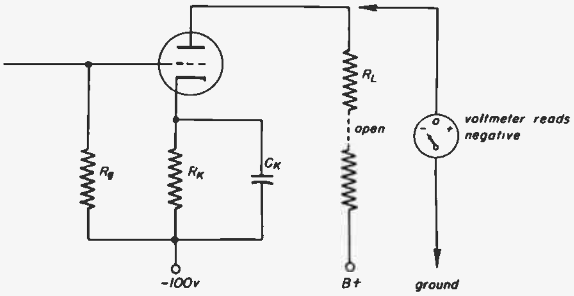

Fig. 26-27

The grid and cathode are both returned to minus 100 volts. This does not affect the bias, which is still developed by the cathode resistor. Now, suppose the plate load resistor should open up. Normally, we might expect to read zero voltage from plate to ground. But we read a *negative* voltage when the meter is connected as shown in Fig. 26-27. Under the circumstances with the negative cathode potential, this is a perfectly normal situation. A negative voltage applied to the cathode acts the same as a positive voltage on the plate. In fact some types of amplifiers receive their entire "plate" voltage by applying a negative supply voltage to the cathode and then grounding the plate resistor. Well, this is exactly what is happening here. When we connect the voltmeter as in Fig. 26-27, we are connecting the resistance of the meter from plate to ground. The negative potential at the cathode causes plate current to flow through the tube and meter. The voltage divider between the tube and the meter as a plate load still exists except that in this case the "plate" supply voltage is negative. It is perfectly natural therefore, to expect the plate voltage to be negative, although less negative (more positive) than the cathode. The defect here was caused by an open plate load resistor which is easily checked with your ohmmeter.

Troubles In Decoupling Networks. – In the section discussing the characteristics of a pentode amplifier, we mentioned some difficulties we might run into with a defective decoupling network (See Fig. 26-18). Let us review these and then see what happens when we have a coil for a plate load. With a *resistance plate load* (R_L) we may observe the following.

1. An increased value of R_f will cause the plate voltage to drop.
2. A shorted or leaky C_f will cause a considerable drop in plate voltage.
3. An *open* C_f will probably cause an *increase* of gain, because R_f now *adds* to the plate load resistor.

Of these three possibilities, the first two will remain regardless of the type of plate load. The third factor of gain, however, might change in the *opposite* fashion. Take this case:

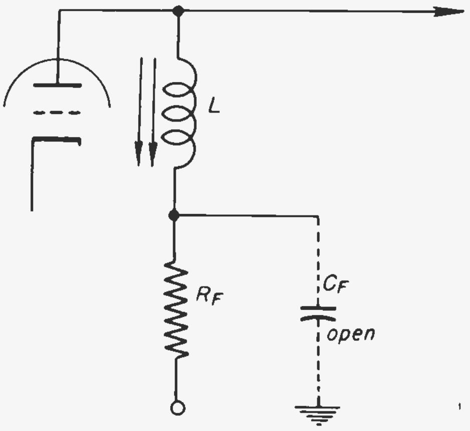

Fig. 26-28

When C_f is good, it grounds the a-c signal at the bottom of the resonant coil. Therefore, the only a-c plate load consists of the coil. This coil is tuned to be resonant at a certain frequency and normally has a high impedance at this frequency. This high impedance provides the required gain at the resonant frequency. If we have an *open* decoupling condenser (C_f) as indicated in Fig. 26-28, our a-c ground at the bottom of L is lost. The resistor R_f is now in series with the coil. The resistor has a damping effect on the coil and lowers its Q. As a result, the plate load actually decreases in value. This decreased plate load causes a *reduction of gain*. Thus, you see that when the plate load is a resonant circuit, an open decoupling condenser may decrease the gain. On the other hand, when the plate load is a resistor, an open decoupling condenser may *increase* the gain.

OSCILLATORS

26-11. – Now that we have completed our discussion of amplifiers we are going to turn our attention to our second basic circuit – *oscillators*. As we mentioned before, most television receivers employ three oscillators. These are:

1. *The heterodyne or r-f local oscillator,* operating at very high radio frequencies. This oscillator heterodynes with the incoming r-f signal to produce the intermediate frequencies.
2. *The horizontal deflection oscillator,* operating at a fixed frequency close to 15,750 cps. This oscillator determines the rate of horizontal scanning and is the source of the horizontal sweep signal.
3. *The vertical deflection oscillator,* operating at a fixed frequency close to 60 cps. This oscillator determines the rate of vertical scanning, and is the source of the vertical sweep signal.

What is the Function of Oscillators? – Generally speaking an oscillator functions to change d-c from the power supply into a-c. It is a type of a-c generator operating from a d-c source. We already know that the function of amplifiers is to increase the magnitude of the voltage or power applied to its input. However, note that with amplifiers, we must supply an input generated at some *external* source. Oscillators are somewhat similar to amplifiers, except that they are required to *supply their own input.* This grid input is obtained by taking some of the plate circuit output and feeding it back to the grid input circuit. Oscillators are self-sustaining a-c generators which do not require an external signal to operate. Thus an oscillator is sometimes described as "an amplifier with its tail in its mouth".

Another distinguishing feature of an oscillator is the waveshape of its output. With an amplifier, you can apply a wave of practically any shape to the input, and get an amplified version of this wave in the output. Not so with an oscillator. Oscillators in general are capable of providing only one type of output waveform. The type of waveform is determined by the grid and plate circuits and to some extent, by the operating conditions of the tube.

Since all oscillators operate on the same basic principles, we are first going to see what these basic principles are. Afterwards, we will discuss methods of troubleshooting oscillators using the multimeter. Much of the information given in the section on amplifiers will also be applicable to oscillators.

Basic Principles of an Oscillator. – Practically all oscillators may be represented by this simplified diagram:

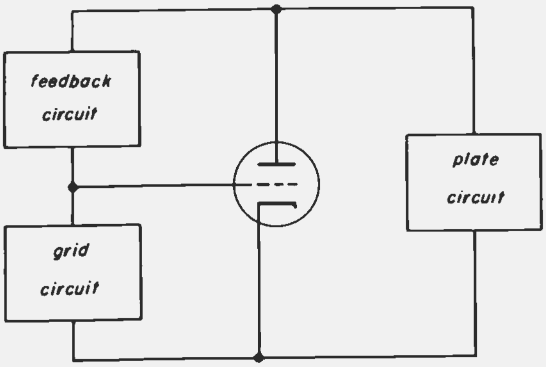

Fig. 26-29

This shows that the basic components of most oscillators are:

1. An amplifier tube, either triode or pentode.
2. A frequency determining circuit. This may be part of the plate or grid circuits, or both.
3. A feedback circuit. This feeds some of the output back to the grid.

Most TV sets have two general types of oscillators. One type is used for the r-f heterodyne oscillator. This is a very high frequency, sine wave oscillator, whose operating frequency is determined almost entirely by a resonant L-C circuit.

The other type of oscillator is used to produce the horizontal and vertical scanning. This is frequently in the form of a "blocking" oscillator. The *blocking* oscillator is of special interest to us at this time because it actually has two operating frequencies. This effect may be made clearer with the aid of these waveforms:

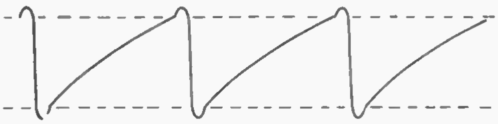

Fig. 26-30 (a)

These are the waveforms that would appear at the grid of a typical blocking oscillator. First of all, note that these waves consist of single, incomplete sine waves spaced by some definite interval. In a blocking oscillator, the frequency of greatest interest to us is the *repetition frequency*. That is, the rate at which the individual sine waves are repeated each second. For example, in the horizontal oscillator, the repetition rate would be about 15,750 times per second. In the vertical oscillator the repetition rate would be about 60 times per second.

The second frequency is the *natural resonant* frequency of the oscillator. You can best picture this by looking at the individual sine waves of Fig. 26-30*(a)* and imagining them to be *continuous*. If they were continuous this would be our other frequency. This natural resonant frequency is important in the design of the blocking oscillator since it determines the width of the sine wave pulse. However, we have no control over this factor and from the point of view of trouble-shooting it does not particularly concern us.

We have said, that for an oscillator to operate, we must take some of the energy from the plate circuit and return it to the grid circuit. This energy must be:

a. In phase with the original grid voltage (in order to aid it) and
b. Of sufficient amplitude to overcome all of the various *losses* in the oscillator circuit.

In a properly running oscillator these requirements are always met. The process of returning output energy to the grid circuit is commonly known as feedback, and the circuit performing this is the feedback circuit.

Feedback. – The feedback may be returned to the grid inductively, capacitively or sometimes by a combination of both. In inductive coupling, feedback energy is transferred from plate to grid circuits by transformer action, as in the blocking oscillator. In the case of capacitive coupling, either an actual condenser or tube interelectrode capacities may be the medium which couples the feedback energy to the grid.

An example of inductive feedback is the type employed in a blocking oscillator, a simplified diagram of which is shown here:

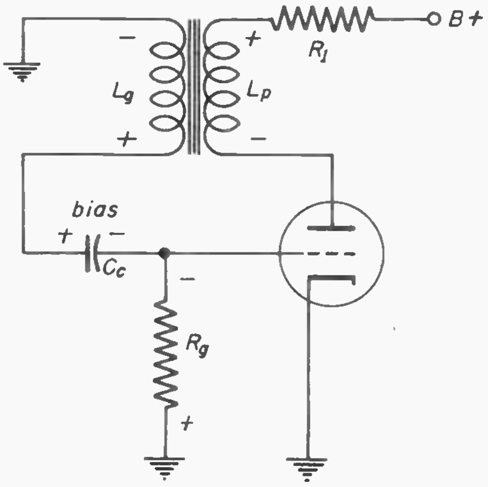

Fig. 26-30 (b)

Very briefly, inductive feedback operates in the following manner. Assume the plate current through L_p to be increasing. An expanding field will build up about L_p and the voltage across this coil will have the indicated polarity. A voltage will now be induced in L_g such that the grid is driven *positive*. This positive grid voltage aids the plate current to increase *as it was doing originally*. Thus, the feedback is in the proper phase to sustain oscillations.

Oscillator Bias. – Practically all oscillators use signal, or grid leak bias. As explained previously, signal bias is produced when grid current charges up the grid condenser on positive portions of the grid signal.

The important thing to remember is that you cannot have signal bias without *signal*. An oscillator *generates its own signal*. Therefore, the presence or lack of bias is an important aid in troubleshooting oscillators, as we shall see in a little while.

Bear in mind that oscillators are basically the same as amplifiers with the very important exception that oscillators supply their own input signal. This means that whether or not an antenna signal is present, the oscillators should still operate. In other words, any time you turn the receiver on, signal or no signal, the oscillators should be working. Remembering this vital fact, we may proceed to troubleshooting oscillators in a manner similar to that used for amplifiers.

TROUBLESHOOTING OSCILLATORS.

26-12. – There are two basic ways in which oscillators can become a source of trouble. These are:

1. Changes of oscillator frequency.
2. Changes of the oscillator output wave form, or no output wave.

In the first case, when the frequency changes, the cause depends primarily on the type of oscillator. Where a blocking oscillator is concerned, frequency changes are generally caused by grid circuit troubles, and particularly by a faulty grid resistor. Of course, when speaking of the blocking oscillator, the only frequency we are concerned with is the *repetition* frequency (sometimes called the "relaxation frequency). The grid resistor is not the only cause of frequency changes in the blocking oscillator. Almost any defective component or improper applied voltage will produce some frequency change. However, it is true that in the blocking oscillator, serious frequency changes are most often caused by a grid circuit defect.

In the case of a sine wave oscillator, such as the local heterodyne oscillator, grid circuit changes do not usually have any serious effect on the oscillator frequency. About the only factor which will cause such serious frequency changes is a change in the inductance or capacitance of the L-C frequency determining circuit. In this case, it is important to remember that the oscillator tube capacities help to determine the frequency. Thus a defective tube, or even a new one, may cause sufficient change of tuning capacity to change the oscillator frequency. A trouble in the Fine Tuning control is another factor that may change the oscillator frequency. In a similar way, if anything happens to distort or damage the inductance of the tuned circuit, frequency changes may occur.

Oscillator Output.–The second general type of trouble which can happen to oscillators is a change in the amplitude or shape of the output wave, including a complete loss of output. Most of the time these troubles show up as abnormal voltages at the oscillator tube elements. In thinking about this, it is important to keep in mind the similarity between oscillators and amplifiers. Conditions which caused abnormal voltages in amplifiers may have the same effect in oscillators.

There are certain basic troubleshooting procedures which apply in general to *all* oscillators. We are therefore choosing a single example to illustrate troubleshooting in oscillators. This example is the one we just mentioned, the *blocking* oscillator. As you already know, blocking oscillators are used in TV sets in both horizontal and vertical deflection circuits.

Importance of Bias. – As we pointed out before, practically all oscillators use grid-leak signal bias. This is a very important factor in troubleshooting oscillators. You will remember that signal bias is obtained by rectification of the grid signal. An oscillator generates *its own* grid signal. Therefore, no grid signal, *no bias*. This means that if an oscillator stops operating, this condition will clearly manifest itself as a total lack of grid bias.

No Grid Bias. – Let us take the case of an oscillator that has lost its grid bias. Of course we find this out by measuring for bias with our d-c voltmeter. Having determined that there is no grid bias, a further step will help us localize the trouble. This is to measure the plate voltage, which may be abnormal in one of three ways:

1. It may be zero, or negative.
2. It may be excessive.
3. It may be too low

In the first instance, zero plate voltage tells us that an open circuit exists between the plate and B plus. This may be an open plate coil, or open plate dropping resistor. These defects may be found easily by a continuity check with your ohmmeter. If the grid and cathode of the oscillator tube are returned to B minus instead of to ground, you may get a *negative* plate voltage reading on the meter. The reasons for this were explained in a previous section on amplifiers. While we're at it we might point out that a negative plate voltage may simply be caused by excessive plate current through the tube, without any open circuits being present. This again assumes of course, that the cathode is returned to B minus.

The second possibility when no grid bias is present, is the case where the plate voltage may be too high. This is the result of *decreased plate current* and is probably due to a defective tube. Substituting a good tube will quickly eliminate this possibility.

In the third case, where the plate voltage is too *low* and we have zero bias, there are several possibilities, which are listed below:

1. The defect may be a faulty grid condenser. In this case, low plate voltage is caused simply by excess plate current through the plate circuit resistance.
2. The tube may be defective.
3. The plate voltage dropping resistor, if any, may have increased radically in value.
4. The plate circuit condenser, if any, may be defective.
5. The plate coil of the oscillator may be defective, (shorted turns), but not open.

Thus, as you can see, after finding zero bias the procedure is to measure the plate voltage. From this measurement we may further localize the cause of trouble in the oscillator.

Amount of Bias. – The *amount* of bias is also an important clue in troubleshooting oscillators. Refer to the diagram of a blocking oscillator in Fig. 26-30*(b)*.

Too much bias, compared to normal, generally indicates one of two things:

1. The grid resistor R_g has increased radically in value.
2. The amplitude of oscillations has increased.

In a blocking oscillator, an increase of R_g has several effects. The first effect is to cause a *decrease in the repetition frequency*. As a result of this the *amplitude of oscillations will increase*. The increased amplitude then causes the excess reading of bias which we measured. This trouble may be isolated quickly by measuring the grid resistor with your ohmmeter.

In the case of a conventional sine wave oscillator, the effects of an increased value of grid resistor may not even be noticeable in the operation of the set. However, if the grid resistor should increase very radically, it might tend to make the oscillator unstable and this usually shows up as excessive grid bias.

The second case, of increased amplitude of oscillations, might be caused by an increased supply voltage or plate voltage, or as we mentioned, by an increase of grid resistance. The same checks described for amplifiers are applicable here to find the cause of higher voltage.

Insufficient bias may be attributed to:

1. A defective grid condenser Cc – leaky or shorted.
2. A defective transformer.
3. Reduced supply voltage.
4. Increased value of R_1 (Fig. 26-30*(b)*, reducing the plate voltage.

In each of these cases, the defect would manifest itself as a change in oscillator frequency, most likely an *increased* frequency. Note that there is a correlation between changes of bias and changes of frequency when troubleshooting a blocking oscillator. This correlation may be summed up as follows:

a. An *increased bias* is generally associated with a *decrease of frequency.*
b. A *decreased bias* is generally associated with an *increase of frequency.*

In general any malfunctioning of an oscillator shows up as incorrect bias. This is your best clue in troubleshooting all oscillators.

RECTIFIERS

26-13. Rectifiers have quite different characteristics from either amplifiers or oscillators in that no amplification is involved. Generally speaking, the function of rectifiers is to take an *a-c input* and produce a *d-c output.* Filters are generally provided at the output of rectifiers to smooth out any variations in the d-c output. However, neglecting the action of filters for the moment, it is the rectifier itself which changes the a-c into d-c.

In the beginning of this lesson, we listed which stages of a TV receiver are rectifiers. We are not going to repeat the entire list again, but just to mention a few, there are the low voltage rectifier, the high voltage rectifier, and the detectors. For a more complete list, turn back to the beginning of the lesson.

Rectifier Operation. – Before we talk about troubleshooting rectifiers, let us see how a typical circuit functions to produce d-c from a-c. Here is a simplified schematic of a half-wave rectifier:

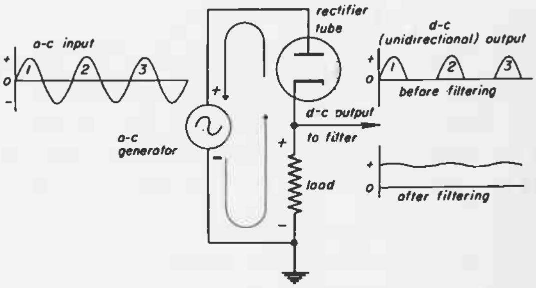

Fig. 26-31

We have here an a-c generator connected in series with a rectifier tube and load resistor. The a-c voltage from the generator is the input to the rectifier. On the positive half-cycle of the input wave, the plate of the rectifier is driven positive and the tube conducts. This conduction, as shown by the arrows, is from cathode to plate of the rectifier tube, through the generator, or other source of the a-c signal input, and up through the load. The current flow through the load is in such a direction that the polarity of the output is positive. A negative output could be obtained simply by reversing the rectifier tube. Current flows through the rectifier only so long as the plate is driven positive with respect to the cathode. Therefore, on the negative half-cycle of the a-c input wave, the rectifier does not conduct and no output appears across the load. As shown in Fig. 26-31, the output of the half wave rectifier consists of unidirectional, d-c, positive pulses separated by spaces. These spaces, where the half wave rectifier does not produce output, are filled in effectively by filter circuits.

In the case of signal rectifiers, such as detectors, the filter performs a somewhat different function. Let's take the video detector as an example. Here we have as input an a-c wave with a very high frequency carrier containing picture and sync information. The picture and sync information represents modulation frequencies having a much lower frequency range than the picture carrier. The output of the picture detector is a rectified version of the input and still contains the picture carrier frequency and modulation frequencies. However, we want to pass only the modulation frequencies on to the video amplifier and to reject all other frequencies. This then is the function of the filter at the output of the detector: to pass only the desired frequencies and reject the undesired ones.

Note very carefully that the functioning of a rectifier depends upon its ability to pass current in *one direction only*. This is the reason we can have a d-c output with an a-c input. In the case of the picture detector, the d-c output is not pure d-c but varies at the rate of the modulation frequencies.

No D-c Is Applied. – A very important factor in the operation of most rectifiers, is the fact that no d-c plate or cathode voltage is applied to the rectifier tube. The rectifier does not require any applied d-c potential, since it operates from the a-c input voltage to produce rectified plate current.

For the purposes of troubleshooting we divide rectifiers into two classes. These are:

1. Power rectifiers.
2. Signal rectifiers.

Power rectifiers are those in which the operating voltages and currents are quite high. Typical examples of power rectifiers are the low voltage rectifier, the high voltage rectifier and the damper.

Signal rectifiers are those in which the operating voltages are very low – from a fraction, to several volts – and the currents are also very low as compared to power rectifiers.

Power Rectifiers. – The most important factors to consider when dealing with the troubleshooting of power rectifiers is that we are working with circuits handling high voltages and currents. In general, this means that tube and component failures will probably occur more frequently in power rectifier circuits than in signal rectifier circuits.

Let us start with the case where we have no d-c output from the power rectifier as indicated by a d-c voltmeter. As usual, the first thing we suspect will be the tube.

Substitution of a good tube quickly eliminates this possibility, assuming the filament supply to be all right. If the tube is not the cause of trouble, we might have a short circuit across the output load. This may be checked with the ohmmeter. If there is a short across the load, determine its cause. These shorts are frequently caused by defective filter condensers.

If the tube and load resistance are all right the fault must be with the input voltage. You may check this with an a-c voltmeter, taking the necessary precautions if high a-c voltages are present or expected.

Signal Rectifiers. – The troubleshooting procedures for signal rectifiers are basically the same as those for power rectifiers. However, it is very seldom that any short circuits take place in the output, due to the low voltages involved. Therefore, with signal rectifiers, if no d-c output exists, it is usually due to a bad tube, or no a-c input.

Parallel Load Connection. – The rectifier shown in Fig. 26-31 was arranged so that the load was in *series* with the rectifier tube. Certain signal rectifiers, for example some AGC rectifiers, are arranged so that the load appears in parallel with the rectifier tube. The operation of this type of rectifier is somewhat different than the series case. A basic diagram is shown in Fig. 26-32.

In this case, the resistor R_L may be considered as the load. Note that R_L is in parallel with the rectifier tube. The action of the rectifier tube in conjunction with C_c is to shift the *average* value of the wave from zero in the input to some *negative* value at the output. The operation of this circuit is similar to grid leak bias. Whenever the generator voltage is positive, the tube conducts and charges up C_c. This develops a negative bias at

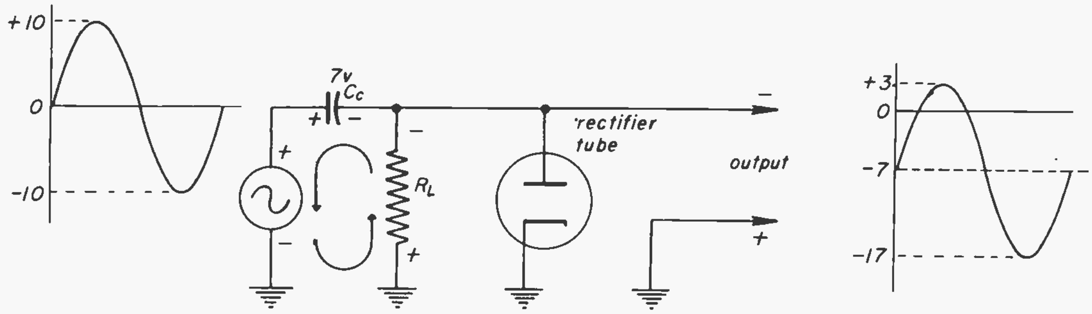

Fig. 26-32

the plate of the tube, the magnitude of which depends upon the size of R_L, as in grid leak bias. Let's say in this case that the bias is 7 volts. This means that the tube cannot conduct until the input wave exceeds the 7 volt bias. If the impedance of the generator is low, and it usually is, the output wave is not affected much as far as its shape is concerned, except possibly for a slight flattening at the top. The important change which does take place in the output is a shift in the *average* value. The input wave varies from zero to plus and minus 10 volts. Therefore its average value is *zero*. This is not true of the output wave. Across R_L we have a d-c potential of minus 7 volts, which for all practical purposes is constant. This potential of minus 7 volts now sets the *average* value of the output wave. Note in Fig. 26-32 that the amplitude of the output wave remains the same, but it now varies around minus 7 volts, the new average value. What the rectifier and C_c-R_L combination have done is to shift the average value from zero to a negative potential. If we now pass this output wave through an RC filter, the output of the filter will be a *negative* d-c potential. It is also possible to have a positive output. This is done merely by reversing the rectifier tube.

Output Too Low. – A rectifier output which is too low may also be traced to:

1. Defective tube.
2. Reduced load resistance. This may be caused by leaky condenser, or defective amplifier or oscillator circuit.
3. Reduced input a-c voltage. Check with a-c voltmeter.

Output Too High. – The d-c rectified output may sometimes be found to be abnormally high. This in general will be caused by:

1. Increased load resistance, mainly the result of changes in bleeder conditions.
2. Increased a-c input voltages.

It is worth remembering that the general principles outlined here for the operation and troubleshooting of rectifiers applies to all rectifiers. Of course, different types have their own characteristic problems. These will be taken up one by one as we come to them in later lessons.

SIGNAL TRACING AMPLIFIERS.

26-14. When an amplifier consists of more than one stage, it is frequently possible to isolate trouble to one particular stage by signal tracing. As its name implies, signal tracing is troubleshooting by following the course of a signal through the stages of an amplifier. In this lesson, we will only be concerned with that phase of signal tracing which may be performed using equipment available in the field.

We may list the techniques of "field" signal tracing under the following general headings.

1. Measurement of signal bias, if used.
2. Measurement of signal, using the a-c meter.
3. Injecting a 60-cycle signal into an amplifier and following its course.

Certain amplifiers in a TV set employ signal bias. Some of these are:

a. Mixer
b. One or more sound i-f amplifiers
c. Some sync amplifiers
d. Some horizontal sweep output amplifiers

While not being strictly signal bias, the d-c output of the sound and picture detectors represents a rectified signal voltage and provides a similar indication. As we pointed out previously, the presence of signal bias, or detector output indicates that the signal is at least reaching that point and the trouble is further on. A lack of signal bias in a particular stage usually means that the signal is not reaching that point and that the trouble is in a preceding circuit..

Since the preceding or succeeding stages may *not* have signal bias, we must resort to additional methods to trace the signal. One of these is to measure the signal with an a-c meter. Before discussing how to do this there are certain precautions to be observed.

Meter-Measuring Precautions. – We must first realize that there are certain definite limitations in trying to measure signals with the usual type of a-c meter. The ordinary non-electronic type of a-c voltmeter is calibrated only for 60-cycles. Depending on the rectifier used, such an a-c meter may give some indication up to several thousand cycles. Therefore, these meters in general can only be used to measure signals between the range of 60 to a few thousand cycles. We are therefore restricted to measuring a-c signals in the following amplifiers.

a. Audio amplifier
b. Video amplifier
c. Sync amplifier, and sync separator
d. Vertical output amplifier
e. The horizontal output amplifier

In all these amplifiers, the procedure is the same. With the meter on a-c and a suitable scale selected, measure for the presence of signal at the *grid* of one of the amplifiers just described. All we are looking for here is some *indication* of signal. You cannot expect to read the actual amplitude of signal.

Signal Injection. – Another method of troubleshooting amplifiers by signal tracing is to inject a 60-cycle signal into the grid of the amplifier in question. If the amplifier is working, an amplified indication will appear in the output circuits. This can be measured with your a-c meter or may show up as sound in the speaker, or some indication on the kinescope. The 60-cycle signal can be obtained from the filament supply or by touching your finger to the grid of the amplifier.

TROUBLES IN TUBES, RESISTORS AND CONDENSERS

26-15. In previous sections of this lesson, we were concerned with the operation of circuits and with localizing troubles to a specific circuit location. In this section we shall discuss methods of determining if a specific component has failed. Since many troubles are caused by tube failures we will begin with tubes.

Determining Tube Failures. – There are several ways in which tubes may fail. These are: 1) Open filament, 2) Low emission, 3) Short between elements, 4) Gassy tube, 5) Defective pin connections.

Probably the most obvious tube failure is an open filament. In glass tubes this is easily spotted by the absence of the filament light; in metal tubes, the envelope is cold.

Some tubes have *two* filaments tied in parallel to one set of tube pins. Schematically, it looks like this:

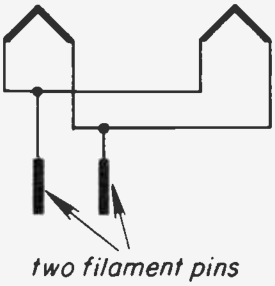

Fig. 26-33

As far as this discussion is concerned, the significance of this arrangement is that one of the filaments may be lit, while the other is open. This may give the impression that the tube is normal while actually one section is dead. Some of these double filament tubes commonly used in TV sets are: (a) 6H6 or 6AL5 dual diode, (b) 6SN7 dual triode, (c) 5U4-G or 5V4-G full wave rectifiers. A somewhat different type of dual filament is to be found in the 12AU7 as shown here:

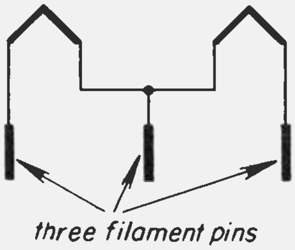

Fig. 26-34 (a)

In this case, the filaments are brought out to *three* tube pins. By means of this arrangement the filaments may be connected in parallel for 6.3 volt operation

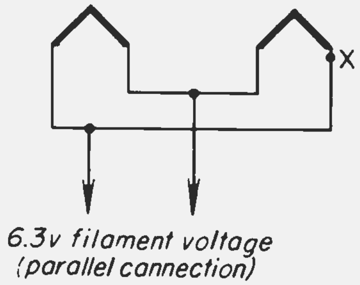

Fig. 26-34 (b)

(Fig. 26-34*(b)*, or in series for 12.6 volt operation Fig. 26-34*(c)*:

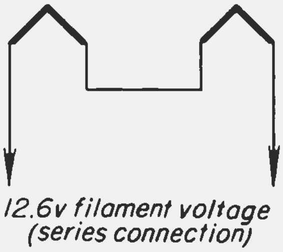

Fig. 26-34 (c)

In many TV sets, the parallel operation is preferred. As in the previous case of parallel filaments, one filament may burn out independently of the other. Another possibility is that a fault external to the tube may cause only one filament to go out in the parallel connection. For example, in Fig: 26-34*(b)*, if there was a poor connection at the socket, at point X, the right hand filament might not light, but the other one would.

Low Emission. – Another type of tube trouble is caused by low emission. We are assuming in this case that all of the tube operating potentials are correct. Low emission simply means that the tube is no longer capable of delivering its rated plate current. This generally is caused by a worn-out cathode even though the filament may still light. Low emission frequently shows up as a loss of gain of the particular stage involved. The only solution here is to replace the tube.

Leakage and Shorts. –Tubes sometimes develop partial or complete shorts between certain elements. When a tube short is only partial, it is generally referred to as *leakage*. The most common type of tube leakage or partial short is between the filament and cathode. This is especially true if the cathode is returned to a high potential, such as minus 100 volts. The possibility of shorts from filament to cathode is greatest because of the small spacing between these two elements. This type of tube defect generally shows up by producing hum effects. In the case of a kinescope tube, the effect might be uncontrollable brightness, which remains at a high level.

While not as common as a filament-to-cathode short, a tube may develop a short from control grid to cathode. This will remove the bias from the tube involved and may make the stage or the kinescope inoperative.

Another type of short that may occur in a beam power or ordinary pentode effectively shorts the plate to cathode. This effect is illustrated in Fig. 26-35.

The suppressor grid is returned to the cathode. If the suppressor shorts to the

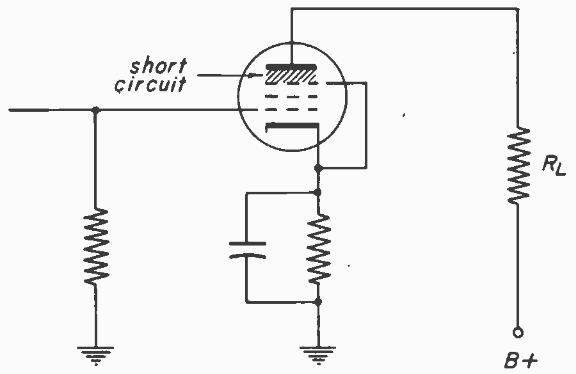

Fig. 26-35

plate, the plate is also shorted to the cathode. The full B plus now appears across R_L and may burn it out.

In any of these cases of shorts or leakage, the tube must be replaced.

Gassy Tube. – When tubes are manufactured the envelope is evacuated and great pains are taken to remove all traces of gas or air. However, after the tube has been in service it may become gassy. This may result from one of two general causes. Most common is leakage of air into the tube due to imperfect glass seals or actual cracks in the glass. The other possibility is that gas may be driven out of the elements or insulating material of the tube, due to heating. In either case, the general effect on the tube is the same. A gassy tube frequently conducts excessive current and may burn some resistor in the plate circuit. The gas can be seen in tubes with a glass envelope, as a blue or reddish-blue glow. (In small power amplifier tubes like the 6K6 though, a small amount of blue glow is normal). In rectifier tubes such as the 5U4-G, you have to look inside of the plate to see the glow that indicates excessive gas. A gassy amplifier tube, particularly a voltage amplifier, does not necessarily cause extreme conduction. It may manifest itself in other ways, such as a change of bias or other erratic operation.

Pin Connections. – Some tube defects may be caused by faulty pin connections. This may be divided into two types: a) tubes with bases, b) tubes without bases. In the first case where a tube has a base, such as the ordinary octal 8 pin base, the fault is generally due to an unsoldered or poorly soldered pin connection. This can sometimes be remedied by resoldering the defective pin.

In the second case where a tube has no base, such as the miniature glass 7- and 9-pin types, the fault is generally caused by a broken pin. There is no simple remedy for this and the tube must be replaced.

Tube Replacements. – When tube trouble is suspected, the easiest thing to do is to replace that tube with one of the same type. In some cases it is possible to take a tube from a *different section* of the same receiver for substitution.

There may be times where a tube of the desired type is not immediately available. In these cases it is important to know that another type may be successfully substituted. To assist you in finding a suitable substitute, a table of possible substitutions is reproduced at the end of this lesson.

Resistors. – Composition-type fixed resistors are identified according to a standard color code. This consists of three or four color bands as illustrated here:

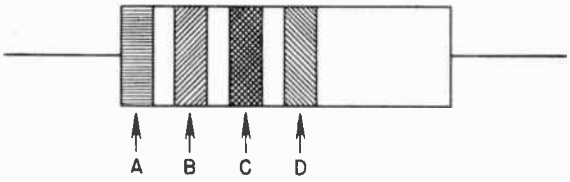

Fig. 26-36

For simplicity, we have labeled these bands with the letters A through D. Each of these color bands has the following meaning:

1. Band A, indicates the first significant figure of resistance value in ohms.
2. Band B, indicates the second significant figure.
3. Band C, indicates the decimal multiplier, or number of zeros to be added.
4. Band D, (if present) indicates the tolerance, in percent about the indicated resistance value. If there is no band D, the tolerance is assumed to be plus or minus 20 per cent.

The significant figure, multiplier and tolerance assigned to the various colors, are given in this table:

Color	Significant Figure	Multiplier	Tolerance
Black	0	1	
Brown	1	10	
Red	2	100	
Orange	3	1,000	
Yellow	4	10,000	
Green	5	100,000	
Blue	6	1,000,000	
Violet	7	10,000,000	
Gray	8		
White	9		
Gold	-		5%
Silver	-		10%
No-Color	-		20%

The following example will show how to use the color code. Suppose we have a resistor and bands A through D have the following colors in succession: Red, Brown, Yellow and Silver. Using the table we obtain the following:

Red	Brown	Yellow	Silver
2	1	0000	10%

Thus we find that this particular resistor has a value of 210,000 ohms and a tolerance of plus or minus 10 per cent. Other color coded resistors are read according to the same principles.

Substitution Of Resistors. – As was the case in replacing tubes, it is desirable that an identical replacement be used for a defective resistor. While this is desirable, there are times when an exact replacement is not available and the required value may have to be made up of two resistors in series or parallel. If you have to do this there are two factors to be kept in mind:

1. The resistance value.
2. The wattage rating. This is best explained by an example. Suppose we need a 10,000 ohm, 1 watt resistor and the exact replacement is not available. We could put two 5000 ohm resistors in series or two 20,000 ohm resistors in parallel. Each resistor can be the ½ watt type, for either the series or parallel connections. Higher wattage resistors can be used but are not necessary.

Suppose we had to pick out two 20,000 ohm resistors according to the color code. Let's see how this works out. The first significant figure is 2 and the corresponding color is Red. The second significant figure is zero and the corresponding color is Black. Following this we have three zeros, and the corresponding color is Orange. Thus a 20,000 ohm resistor has the colors Red, Black and Orange, plus a tolerance indication, if any.

How Resistors Fail. – Composition type resistors generally fail by changing in value. The usual tendency for composition resistors is to *increase* in value during normal operation of a TV set. This increase may vary from a small amount to an extreme change in value. Composition resistors do not generally *decrease* in value unless there is an excessive amount of current in them. This is usually the result of a defect in some other component, causing considerable overheating of the resistor.

Defective resistors are frequently located by their burned appearance, or they may even be cracked. A visual inspection of a defective set frequently pays dividends in detecting bad resistors. When a resistor burns the color coding often becomes indistinguishable. In such cases refer to the schematic for the correct replacement value, but first determine the cause of the overheating. Resistors sometimes open due to mechanical failure. This is a relatively infrequent trouble and is quickly checked with an ohmmeter.

There are two other points to watch for in checking resistors, which are not necessarily due to a change of value. One is the possibility that the wrong value was wired in originally. This is likely to be more prevalent in new sets than in old ones. Another possibility is that the resistor may have been improperly coded during its manufacture. These last two points are not as common as the others but are definite possibilities.

Condensers. – Condensers are identified by a color mark in a manner similar to that of resistors. There are several varieties of condenser color codes. We are only going to discuss the one type you may have some difficulty in reading. First a word of caution. Some small tubular ceramic condensers look just like resistors. In many sets this is particularly true of a line of 1500 micromicrofarad ceramic condensers. One sure way of telling that these are condensers is the fact that there are *five* color bands on the condenser. There are also some larger molded tubular paper condensers which might be mistaken for large resistors. The background color, usually black or white, and the *five* color bands will help you to identify these as condensers. Furthermore, these condensers have one color band set apart from the rest to indicate the voltage rating in hundreds of volts.

The type of capacitor color code you might have some trouble reading is that used for fixed, flat-type mica condensers. This is illustrated here:

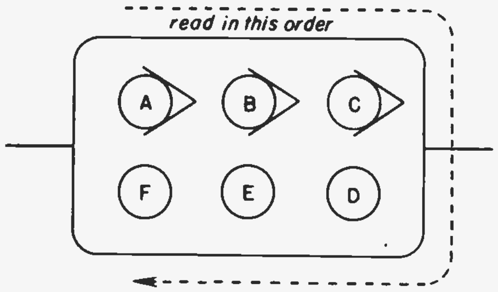

Fig. 26-37

These condensers are identified by means of six colored dots. The colors are assigned the same numbers as for resistors.

The significance of each color dot is as follows: Dot A, Type of mica; Dot B, first significant figure; Dot C, second significant figure; Dot D, decimal multiplier; Dot E, tolerance in percent; Dot F, characteristic or class.

There are two important points to keep in mind when reading the value of these condensers. First make sure the condenser is facing the right way when you read. The proper direction is shown in Fig. 26-37 with the arrows pointing to the *right*. (There may only be a *single* arrow). Second, you must read the dots in sequence. Note that the dots are read ''around the corner''.

Let's take an example of reading this condenser color code, disregarding dots A and F. Example: dot B is brown; dot C is green; dot D is red and dot E is black (or missing). We have the following:

Brown	Green	Red	Black
1	5	00	±20%

Therefore, this is a 1500 micromicrofarad condenser with a tolerance of plus or minus 20 percent. Note that the value of capacitance indicated by the color code, is always given in *micromicrofarads*.

Electrolytic Condenser Markings. – These consist of a small square, triangle or half circle stamped on the case and again next to each terminal lug on multiple unit condensers. A table showing these markings is given in Fig. 26-38.

How Condensers Fail. – Condensers may fail in one of two general ways: 1) they may short, either completely or partially; or 2) they may open up. With ceramic and

		1 3/8" Dia. Case			1" Dia. Case	
VOLTAGE	SINGLE UNIT	DUAL	TRIPLE	QUADRUPLE	DUAL	TRIPLE
Highest (ripple)	Blank	⌓	⌓	⌓	▭	▭
Intermediate (1st)				▭		△
Intermediate (2nd)			▭	△		
Lowest		△	△	Blank	△	Blank
Common negative – always connects to can						

Fig. 26-38

mica condensers, the tendency is more to shorts than opens. A condenser may fail with a "dead" short. This type of failure frequently manifests itself by causing resistors to burn or causing radical voltage changes. Some condensers become "leaky". This means that they will conduct direct current to some extent. A leaky condenser may be checked with an ohmmeter but this is not a positive check. It is better to check the condenser with its operating voltage applied. An example of checking a leaky condenser with a voltmeter is given here:

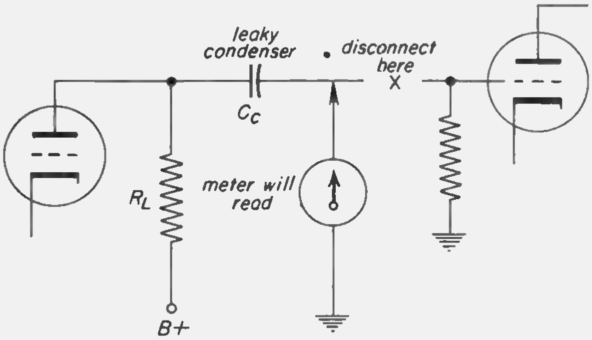

Fig. 26-39

Here we have a coupling condenser suspected of being leaky. Check this by opening the grid connection and inserting a d-c voltmeter as shown. If the meter reads at all, the condenser is bad. Some leaky condensers vary continuously in their leakage resistance. This is apt to create noises, or flashes in the picture. The voltmeter reading flickers when such a condenser is checked.

As was the case with resistors, condensers may be marked improperly or be wired in the wrong place. This doesn't happen too often but is a definite possibility. If you are in doubt, replace the condenser with a good one of the correct value.

Condensers may open. This is usually the result of an internal mechanical failure. Open condensers may be more difficult to locate than shorted or leaky ones. The reason for this is that open condensers do not cause any voltage changes or burning resistors. When checking for open condensers, shunt the suspected unit with another of the same type which is known to be good. It might be a good idea to have a few condensers (including electrolytics) with clips so you can just clip a good condenser across a suspected open one.

It is possible for a short to occur which affects the a-c signal only. This is not actually due to a condenser failure, but to a short of the condenser lead to the chassis. An example of this is illustrated here:

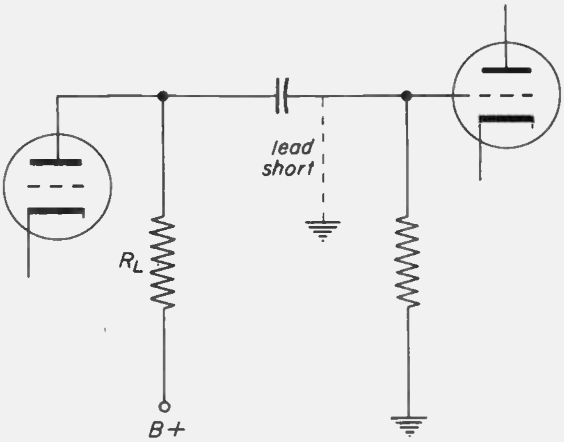

Fig. 26-40

This short will *not* affect the d-c voltages, but only the a-c signal. An ohmmeter check for the normal d-c resistance from grid to ground, or a check for the presence of signal at the grid, can locate the trouble.

Controls. – These are generally variable resistors connected either as potentiometers or rheostats. Pictorial and schematic views are given here:

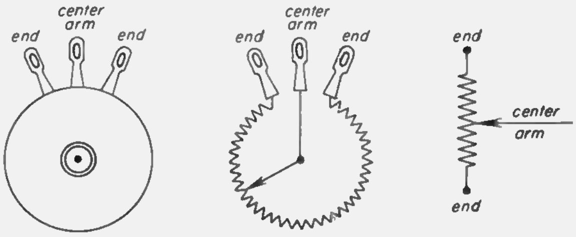

Fig. 26-41

Note that the control consists of a resistance element, (composition or wire) each end of which connects to an outer lug. The center lug connects to a movable slider arm which may contact the resistance element at different resistance values.

When a control is connected as a potentiometer it is generally a parallel circuit element which acts as a variable voltage divider. For example, a volume control may be connected in the grid of an audio amplifier like this:

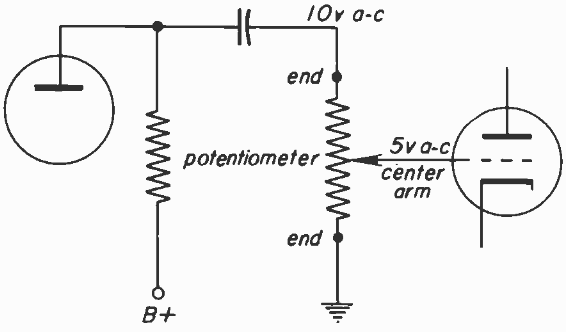

Fig. 26-42

In this case the amount of resistance across the circuit remains constant, but different amounts of voltage may be tapped off by moving the center arm. Since the amount of circuit resistance is fixed with a potentiometer, usually an exact replacement should be made if one goes bad.

A control may be connected as a rheostat. There are two ways of doing this both of which are shown here:

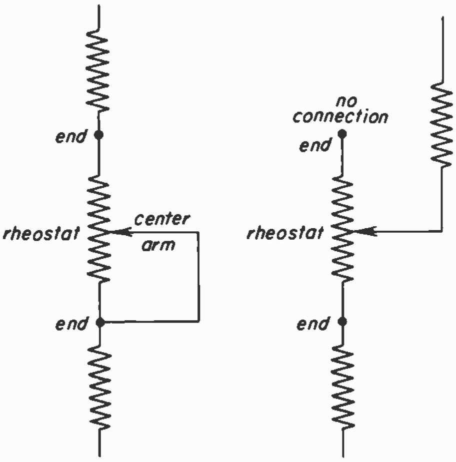

Fig. 26-43

Unlike the potentiometer, a rheostat is connected as a *series* circuit element. The amount of circuit resistance is variable. Because of this it is not always necessary to have an exact replacement for a rheostat.

Ways In Which Controls Fail. –Controls may fail in any of several ways:

1. The control may open up.
2. The element may burn.
3. The control may become noisy.
4. The element or center arm may short to the cover.

An open control may be caused by the center arm not contacting the element. This is usually due to a mechanical failure and can sometimes be repaired. A resistance check from the center arm to either end will quickly determine if this has occurred. An open control may also be the result of an open resistance element; or the element may be disconnected from one of the ends.

A burned element is the result of passing too much current through the resistance element, and makes the control unusable. Such a control has a characteristic burned odor, which lingers for a long time. A burned control is usually caused by a short circuit, either in the control or an external circuit. Before replacing such a control, be certain the short has first been removed.

Controls sometimes get noisy from normal service. If the condition is not too bad these may be repaired as follows: turn the set (or control) so that the shaft points straight up. Use either plain carbon tetrachloride, or a mixture of carbon tet and lubri-plate (or equivalent). Let the mixture run slowly down the shaft, and rotate the shaft while so doing. This will generally fix up the control, at least temporarily. Always replace controls that are excessively noisy.

An internal short may develop to the cover of a control. Since the cover is usually grounded to the chassis this is equivalent to shorting the control to ground. This may be checked by unfastening the control and holding it away from the chassis to see if the trouble clears up. If there is any voltage on the control, be careful to avoid a shock. A control with this trouble must be replaced.

When replacing a control make sure the shaft is the proper length and shape as the old control. Do not put any pressure on a control shaft when handling a chassis, as the shaft might snap right off.

Wiring Troubles. – In addition to component troubles, certain defects in wiring may cause trouble. The most obvious wiring trouble occurs when a bare wire inadvertently touches the chassis or another component. This may be found by visual inspection. Improperly soldered connections can cause a lot of trouble and may be difficult to detect. One possibility is shown here:

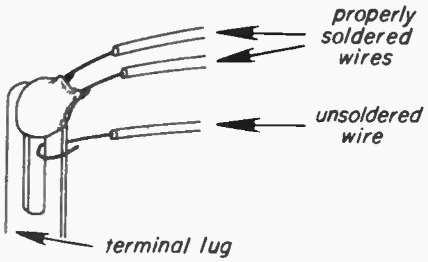

Fig. 26-44

This shows a terminal lug to which several wires are connected. The wires toward the top of the lug are soldered properly, but the solder didn't reach the bottom wire. A poor electrical connection results. This may be detected visually by moving the wires.

Another possibility of a poorly soldered connection is illustrated here:

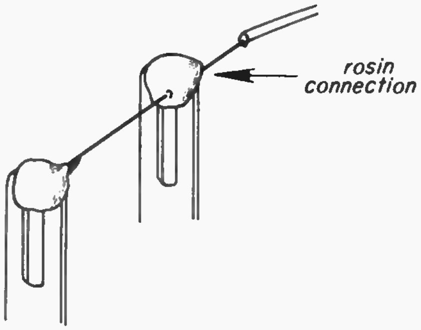

Fig.-26-45

In this example the same wire runs through the hole in one lug and is terminated at another lug. The wire is *not* twisted around the first lug and a rosin solder connection may occur at this point. A rosin connection generally occurs from the application of *insufficient heat* to the holder joint. The wire is then surrounded by rosin *inside* of the solder and is insulated from the lug. This is difficult to detect visually, but sometimes the wire is loose inside of the solder and will slide back and forth. In any case if you have reason to suspect a connection, it is best to resolder it properly.

There are other components in a TV set which may give trouble and have not been discussed here. Some of these are transformers, coils and loudspeakers. However, these will be discussed in later lessons, since the troubles are usually associated with the specific components.

◆

NOTES

NOTES

NOTES

TABLE OF TUBE SUBSTITUTIONS

5U4G RECTIFIER

ALTERNATE	COMMENTS	USED AS	PICTURE COMMENTS
5T4	Direct Substitution	Rectifier	Excellent

5V4G DAMPER—TV

ALTERNATE	COMMENTS	USED AS	PICTURE COMMENTS
5U4G	Direct Substitution	Damper	Excellent
5T4	Direct Substitution	Damper	Excellent
5Y3G	Direct Substitution	Damper	OK. Slightly less deflection
5Z4	Direct Substitution	Damper	Excellent
5W4	Direct Substitution	Damper	OK. Slightly less deflection
5X4G	Requires rewiring socket connections	Damper	Good
6X5	Requires rewiring socket	Damper	Good

5Y3G RECTIFIER

ALTERNATE	COMMENTS	USED AS	PICTURE COMMENTS
5V4G	Direct Substitution	Rectifier	Good
5T4	Direct Substitution	Rectifier	Good—larger physical size may present a problem
5U4G	Direct Substitution	Rectifier	Good—larger physical size may present a problem

6AC7 (1852) Horizontal Oscillator—TV

ALTERNATE	COMMENTS	USED AS	PICTURE COMMENTS
6AJ7	Direct Substitution	Hor. Osc.	OK.
6AB7	Direct Substitution	Hor. Osc.	Good. Not quite the pull-in range of 6AC7, but OK.
6SD7	Approximately ½ G_m of CAC7	Hor. Osc.	Fair. Picture loses sync at extreme ends of horizontal hold control .
6SK7			Poor—recommended only in extreme emergency. Picture holds only on small part of control range
6SJ7			
6SS7			
5693			

6AG5 Converter/Mixer—RF Amplifier—IF Amplifier

ALTERNATE	COMMENTS	USED AS	PICTURE COMMENTS
6AU6	Direct Substitution	IF Amplifier	Good
	Direct Substitution	RF Amplifier	Good
	Direct Substitution	Mixer/Conv.	Must adjust oscillator tuning
6BC5	Direct Substitution	IF Amplifier	Good
	Direct Substitution	Mixer/Conv.	Good
	Direct Substitution	RF Amplifier	Good
6AK5	Direct Substitution	IF Amplifier	Good. May require slight retuning of circuit adjustment
	Direct Substitution	RF Amplifier	Good
	Direct Substitution	Mixer/Conv.	Must adjust oscillator tuning
6CB6	Requires jumper between Pins 2 and 7. Any tie points on Pin 2 of 6AG5 socket must be removed and connected to additional "birdie" terminal.	IF Amplifier	Good
	Rewiring required as above	RF Amplifier	Good
	Rewiring required as above	Mixer/Conv.	Re-adjust oscillator tuning
9001	Requires increasing bias from 39 to approximately 1,000 ohms	IF Amplifier	Good
	Direct Substitution	RF Amplifier	Do not recommend

6AG5 Converter/Mixer RF Amplifier—IF Amplifier (continued)

ALTERNATE	COMMENTS	USED AS	PICTURE COMMENTS
6AR5	Requires wiring change —wire Pin 7 to Pin 2	IF Amplifier	Good—slightly less gain
9003	Direct Substitution	IF Amplifier	Fair. Less gain
	Direct Substitution	Mixer/Conv.	Do not recommend
	Direct Substitution	RF Amplifier	Do not recommend
5591	Direct Substitution	IF Amplifier	Fair. May require slight retuning of circuit adjustment

6AL5 Pix Second Detector, Discriminator, Limiter, Ratio Detector

ALTERNATE	COMMENTS	USED AS	PICTURE COMMENTS
12AL5	Requires additional 6V heater. Rewire existing circuit or add filament transformer	All-purpose	Good

6AQ5 Audio Amplifier, Vertical Output

ALTERNATE	COMMENTS	USED AS	PICTURE COMMENTS
6AR5	Requires removing connection from Pin 7 and placing on Pin 1	Audio Amp.	Good
	Requires removing connection from Pin 7 and placing on Pin 1	Vert. Output	Not recommended—insufficient deflection
6AN5	Requires removing connection from Pin 7 and placing on Pin 1	Both Functions	Good

6AT6 Detector, AVC, Audio Amplifier

ALTERNATE	COMMENTS	USED AS	PICTURE COMMENTS
6AV6	Direct Substitution	Audio Ampl.	Good
	Direct Substitution	Detector, AVC	Good—may be necessary to change bias slightly
6BK6	Direct Substitution	Audio Ampl.	Good
6BT6	Direct Substitution	Audio Ampl.	Good
6AQ6	Direct Substitution	Audio Ampl.	Good
6BF6	Direct Substitution	Audio Ampl.	Fair—less gain—lower audio output
6BU6	Direct Substitution	Audio Ampl.	Fair—less gain—lower audio output

6AU5 Horizontal Output—12″

ALTERNATE	COMMENTS	USED AS	PICTURE COMMENTS
6AV5	Direct Substitution	Horiz. Output	Good

6AU6 Video Amplifier, Sound IF, FM Limiter

ALTERNATE	COMMENTS	USED AS	PICTURE COMMENTS
6BA6	Direct Substitution	Sound or Pix Amp.	Good
6AG5	Direct Substitution	Sound or Pix Amp.	Good
6AK5	Direct Substitution	Sound or Pix Amp.	Good
.6AH6	Direct Substitution	Sound or Pix Amp.	Good
6AK6	Direct Substitution	Limiter—sound and pix amp.	Good
	Direct Substitution	Video Amp.	Not recommended
6BH6	Reverse Pins 2 and 7 on socket unless both are grounded	Sound or Pix Amp.	Good

TABLE OF TUBE SUBSTITUTIONS (continued)

6AU6 Video Amplifier, Sound IF, Fm, Limiter (continued)

ALTERNATE	COMMENTS	USED AS	PICTURE COMMENTS
6BJ6	Reverse Pins 2 and 7 on socket unless both are grounded	Sound or Pix Amp.	Good

6AV6 Audio Amplifier, Detector, AVC

ALTERNATE	COMMENTS	USED AS	PICTURE COMMENTS
6AQ6	Direct Substitution	All Functions	Good
6AT6	Direct Substitution	All Functions	Good

6BA6 Pix IF Amplifier, RF Amplifier, Mixer

ALTERNATE	COMMENTS	USED AS	PICTURE COMMENTS
6AU6	Direct Substitution	Pix IF	Good—except in first pix IF in some models
	Direct Substitution	Mixer—RF Amp.	Good
6BD6	Direct Substitution	Pix IF	Good
	Direct Substitution	Mixer—RF Amp.	Good
9003	Direct Substitution	Pix IF	Good

6BG6G Horizontal Output

ALTERNATE	COMMENTS	USED AS	PICTURE COMMENTS
6BQ6	Socket rewiring necessary. Change wire on Pin 8 to Pin 4. Change wire on Pin 3 to Pin 8	Horiz. Output	OK in 10'' sets. Not enough deflection on larger models without voltage readjustments. Check for overheating.
6CD6	Direct Substitution—may have to increase wattage of screen resistor	Horiz. Output	OK on 10'' sets. Not enough deflection on larger models without voltage readjustments. Check for overheating.

6C4 Audio Amplifier, Phase Inverter

ALTERNATE	COMMENTS	USED AS	PICTURE COMMENTS
6AB4	Requires rewiring socket connection from Pin 5 to Pin 1	Audio Ampl.	Good
6BF6	Use triode section only—rewire socket connections	Audio Ampl.	Fair—some audio distortion at high signal levels.

6CB6 Mixer, RF and IF Amplifier

ALTERNATE	COMMENTS	USED AS	PICTURE COMMENTS
6AK5	Direct Substitution	RF & IF Ampl.	Good
6BC5	Direct Substitution	RF & IF Ampl.	Good
6AG5	Direct Substitution	RF & IF Ampl.	Good
6AS6	Direct Substitution	RF & IF Ampl.	Good
6BH6	Direct Substitution	RF & IF Ampl.	Good
6BJ6	Direct Substitution	RF Ampl.	Good
	Direct Substitution	IF Ampl.	Fair—requires circuit retuning
6AU6	Rewire Pin 7 to Pin 2	IF Ampl.	Good
	Rewire Pin 7 to Pin 2	RF Ampl.	Do not recommend because of wiring change

6F6 Audio Amplifier

ALTERNATE	COMMENTS	USED AS	PICTURE COMMENTS
6K6GT	Direct Substitution	Audio Ampl.	Good
6V6	Direct Substitution	Audio Ampl.	Good
6L6	Direct Substitution	Audio Ampl.	Good
6U6	Direct Substitution	Audio Ampl.	Good

6J5 Vertical Oscillator and Output

ALTERNATE	COMMENTS	USED AS	PICTURE COMMENTS
6L5	Direct Substitution	Vert. Osc. & Output	Good—may require slight adjustment of raster size

6J5 Vertical Oscillator and Output (continued)

ALTERNATE	COMMENTS	USED AS	PICTURE COMMENTS
6C5	Direct Substitution	Vert. Osc. & Output	Fair—slight deflection adjustments may be necessary
6AE7	Change wire on Pin 5 to Pins 4 & 6. Wire Pins 5 and 8 together	Vert. Osc. & Output	Good—slight deflection adjustments may be necessary
6SR7	Requires rewiring all socket connections	Vert. Osc. & Output	Good—slight deflection adjustments may be necessary
6SN7	Requires rewiring all socket connections	Vert. Osc. & Output	Good—slight deflection adjustments may be necessary

6K6GT Audio Amplifier, Vertical Output

ALTERNATE	COMMENTS	USED AS	PICTURE COMMENTS
6L6	Direct Substitution	Vert. Output	Good—may give slightly greater deflection
	Direct Substitution	Audio Ampl.	Good
6V6	Direct Substitution	Audio Ampl.	Good
	Direct Substitution	Vert. Output	Fair—slight decrease in linearity in some models
6F6	Direct Substitution	Audio Ampl.	Good
	Direct Substitution	Vert. Output	Not recommended
6U6	Direct Substitution	Audio Ampl.	Do not recommend
	Direct Substitution	Vert. Output	Fair—slightly less deflection
6Y6G	Direct Substitution	Vert. Output	Good
	Direct Substitution	Audio Ampl.	Good
	Direct Substitution	Video Ampl.	Fair—slightly less gain

6SH7 Sync Amplifier

ALTERNATE	COMMENTS	USED AS	PICTURE COMMENTS
6AB7	Direct Substitution	Sync Ampl.	Good
6AC7	Direct Substitution	Sync Ampl.	Good
6SG7	Direct Substitution	Sync Ampl.	Good
717A	Direct Substitution	Sync Ampl.	Good

6SK7 Sync Amplifier

ALTERNATE	COMMENTS	USED AS	PICTURE COMMENTS
6SJ7	Direct Substitution	Sync Ampl.	Good
6SS7	Direct Substitution	Sync Ampl.	Good
6SG7	Direct Substitution	Sync Ampl.	Good

6SN7GT AGC, Vertical Oscillator, Sync Amplifier

ALTERNATE	COMMENTS	USED AS	PICTURE COMMENTS
6F8	Rewire connections to socket	All Functions	Good. Recommended only where extreme emergencies warrant such additional work

6SQ7 Detector, AVC, Audio Amplifier

ALTERNATE	COMMENTS	USED AS	PICTURE COMMENTS
6SZ7	Direct Substitution	Detector, AVC, Audio Ampl.	Good
6ST7	Direct Substitution	Detector, AVC, Audio Ampl.	Good

6W4 Damper

ALTERNATE	COMMENTS	USED AS	PICTURE COMMENTS
6U4	Direct Substitution	Damper	Good
6X5	Requires rewiring socket connections	Damper	Good

TABLE OF TUBE SUBSTITUTIONS *(continued)*

12AU7 Video Amplifier, DC Restorer, Sync Amplifier

ALTERNATE	COMMENTS	USED AS	PICTURE COMMENTS	ALTERNATE	COMMENTS	USED AS	PICTURE COMMENTS
12BH7	Direct substitution	All Functions	Good	12AV7	Direct Substitution	Video Ampl.	Good in 10'' models—poor in 16'' models
12AT7	Direct substitution	Video Ampl.	Fair—slightly lower gain—loss of sync and picture warping in some models				
	Direct Substitution	Sync Separator and DC Restorer	Good		Direct Substitution	Sync. Ampl. and DC Restorer	Good

◆

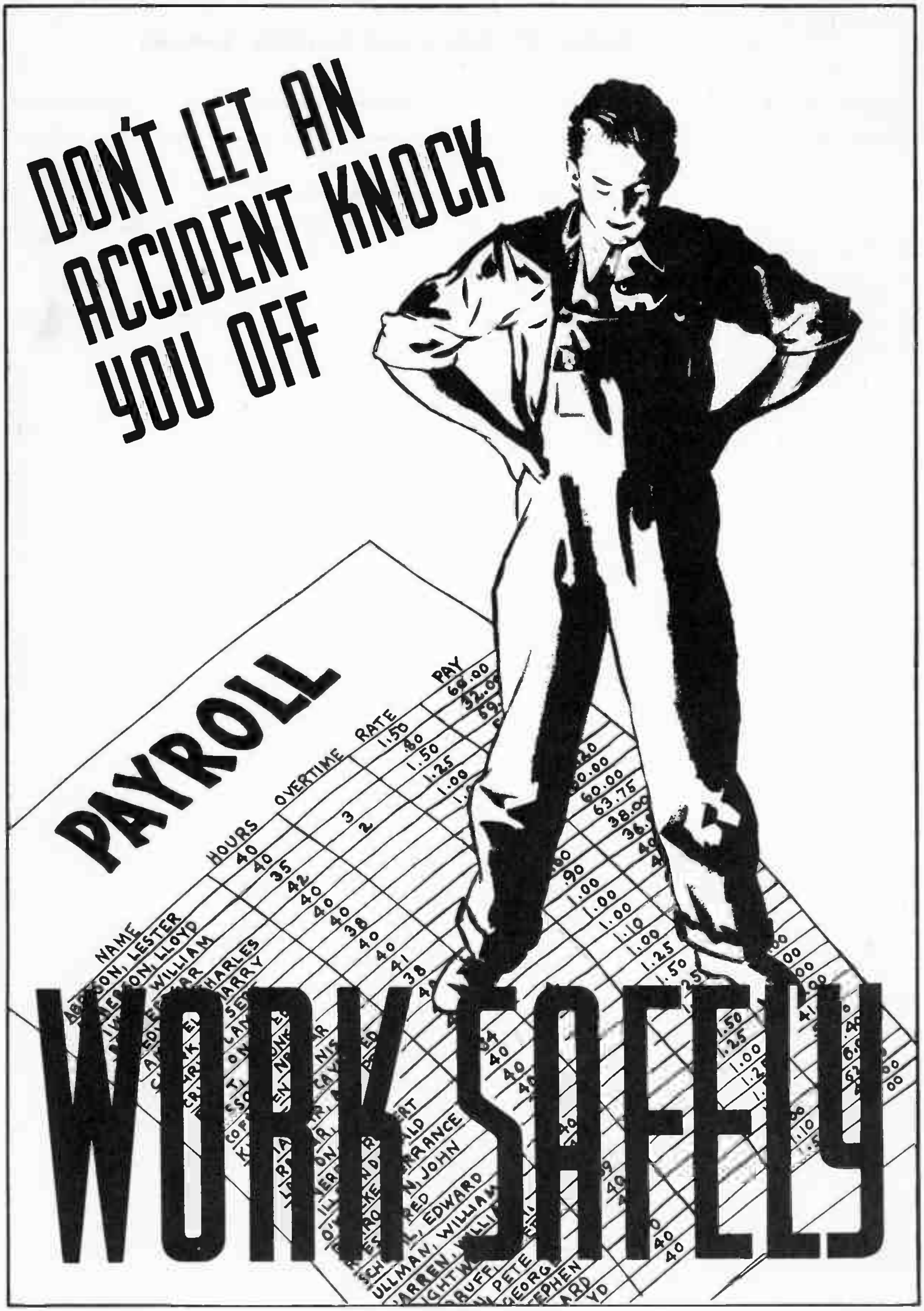

NATIONAL SAFETY COUNCIL
CHICAGO
6472-B

Cut out page along dotted line.

HOME STUDY
TELEVISION
SERVICING COURSE

PREPARED BY

RCA INSTITUTES, INC.

A SERVICE OF RADIO CORPORATION OF AMERICA

HOME STUDY DEPARTMENT
350 West 4th St., New York 14, N. Y.

UNIT SEVEN

Lesson 27: RECEIVER CIRCUITS
Lesson 28: THE CHASSIS AND ITS COMPONENTS
Lesson 29: POWER SUPPLIES
Lesson 30: TROUBLESHOOTING THE LOW VOLTAGE POWER SUPPLY

TELEVISION SERVICING COURSE

PREPARED BY

RCA INSTITUTES, INC.
A SERVICE OF RADIO CORPORATION OF AMERICA

HOME STUDY DEPARTMENT
350 West 4th St., New York 14, N. Y.

LESSON TWENTY SEVEN

RECEIVER CIRCUITS

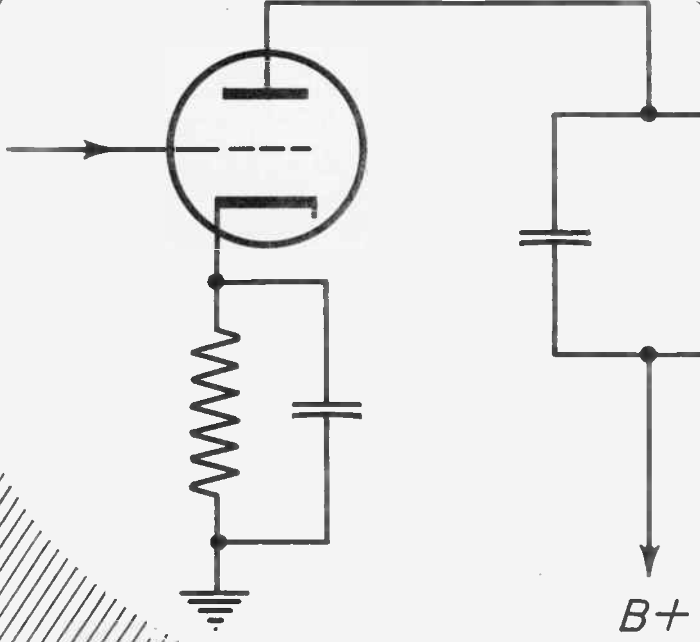

Lesson 27

FUNCTIONS OF A TV RECEIVER

27-1. In the previous two lessons we studied television fundamentals, and are now familiar with the overall system and its problems. In this lesson we are going to deal with the fundamentals of television receiver operations. The entire receiver will be considered here in a fairly general way. Later lessons will discuss each individual section in detail. To give you an idea of what we will study in this lesson, here is a list of general topics that will be discussed:

a. General functions and block diagram of a typical television receiver.
b. Selection of desired signals and rejection of undesired signals.
c. Principles of the superheterodyne circuit.
d. Demodulation of the sound and picture signals.
e. Fundamentals of television picture and sound reproduction.

Primary Functions. – Every television receiver has several primary functions to perform. First of all, it must be able to *select* the desired channel, and at the same time *reject* all other undesired channels or signals. Secondly, remembering that each channel contains *both* the sound and picture signals, the receiver must *separate* them. Third, the sound and picture signals must be *amplified* to a level suitable for use by the detectors. Fourth, the sound and picture signals must be *demodulated* (or detected) so that the intelligence information is extracted. And fifth, the intelligence information must then be further amplified and applied to suitable reproducing devices (speaker and kinescope) where the original program will be reproduced for the viewer's benefit.

That all of these functions must be performed without causing appreciable distortion of the original information is a fact not to be overlooked. Let us see how the receiver performs these necessary functions with the aid of the simplified block diagram shown on the next page.

R-f Section. – When the signals come down the transmission line from the antenna they are fed into the r-f section of the receiver. Entering the r-f section, the first circuit the signals encounter is an impedance matching network, which matches the transmission line impedance to the receiver input. In many TV receivers, this network is so arranged as to be able to match either a 300 ohm parallel wire line or a 72 ohm coaxial line.

The block labeled "r-f section" actually contains the circuits for three stages. These are: (a) the r-f amplifier, (b) the oscillator, and (c) the converter. The r-f amplifier is the first stage that the signal enters after passing through the impedance matching network. This stage contains a vacuum tube amplifier and tuned circuits for each television channel. Tuning, in RCA receivers, is accomplished by a switch that changes the tuned circuits for each channel. The tuning of all three sections of the r-f section is accomplished simultaneously with the operation of the channel selector switch. A "fine tuning" control is also provided for vernier adjustments within each channel. The operation of the r-f section will be discussed in more detail later in the lesson, but we can say now that, in general, the function of the r-f section is the selection of the desired channel with some rejection of undesired signals.

I-f Section. – After the desired channel has been selected by the r-f section, the signals pass along to the picture i-f amplifier section. At this point in the receiver we have the signals from one channel containing both sound and picture information. It is now necessary to separate the frequency modulated sound signal from the amplitude modulated picture signal, so that they may be separately amplified, detected and reproduced.

In many receivers the actual separation may not occur until after the *second* picture i-f stage. Both picture and sound i-f carriers and sidebands are amplified in the first two picture i-f amplifiers in such receivers. In the 630TS type receiver the sound is separated from the picture signal immediately following the r-f section and preceding the first video i-f amplifier. In the first case, where the sound is taken off after the second picture i-f amplifier, this method results in the saving of one sound i-f amplifier stage. In either case, the sound i-f frequencies are separated from the picture i-f frequencies by means of a sharply tuned circuit which is resonant to the sound i-f frequency.

The amplitude modulated picture information is amplified in the picture i-f amplifiers. This usually consists of three or four separate amplifier stages, properly arranged to pass the full bandwidth required for the picture information. If you will remember, the picture sidebands may extend to

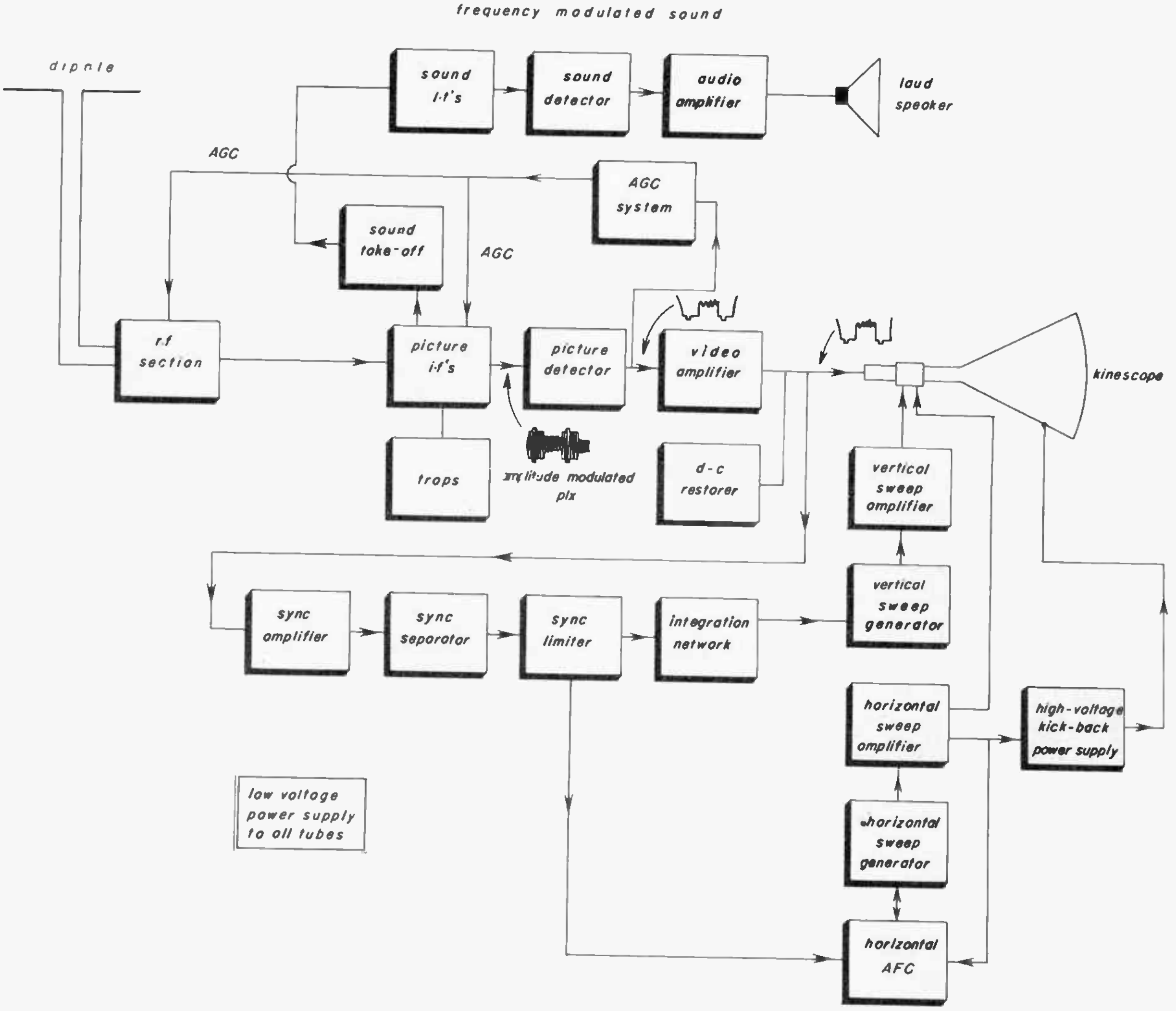

Fig. 27-1

about 4 megacycles. In order that the picture may be correctly reproduced, the full band of sideband frequencies must be passed. This requires a specially designed picture i-f amplifier, whose characteristics we shall discuss in detail a little later on. The need for considerable amplification of the received waves can be seen if we realize that the signal fed to the receiver from the antenna may be in the order of 1/1000 of a volt or less, and the picture signal required to drive the kinescope may have to be about 50 volts. A large percentage of the needed amplification is obtained in the i-f stages.

Video Detector. – After the picture information goes through the i-f stages it must be demodulated, for in the i-f stages the signal is still in the form of a modulated radio frequency wave, although the radio frequency of the original wave has been reduced to that of the intermediate frequency. The method of obtaining this intermediate frequency will be explained later in the lesson. To accomplish demodulation, a "video detector" is provided following the picture i-f stages. It is the function of this detector to extract the picture information from the i-f carrier and sidebands, and to reject the high r-f frequencies. The output signal of the video detector is illustrated in Fig. 27-1.

Video Amplifier. – The magnitude of the output signal from the video detector is about 5 volts or so. Although the form of the signal is suitable for application to the kinescope grid, the amplitude is far too small since we need about 50 volts. Therefore, additional amplification is required between the video detector and the grid of the kinescope to bring the video signal up to the required magnitude. This is provided by the "video amplifier".

The video amplifier generally consists of two stages of specially compensated R-C coupled amplifiers. These amplifiers are similar to audio amplifiers but must cover the unusually wide frequency range from about 30 cycles to 4 megacycles, so that there will be no distortion of picture information. Compensation for both low and high frequency response is provided by means of R-C networks and special inductances. The polarity of the video signal fed to the kinescope grid must be such that the blanking and synchronizing pulses drive the grid in the negative direction. The blanking pulses must drive the kinescope grid below cutoff so that the scanning retrace lines will not be visible. With two stages of video amplification there is a total phase inversion of 360 degrees, which means that the output signal of the second stage will be in the same phase as the input signal to the first stage. The output of the video detector must be of negative sync phase, as shown in Fig. 27-1. If only one stage of video amplification were used, the output of the video detector would have to be of positive sync phase, since a reversal of 180 degrees through the one stage would provide the kinescope grid with negative sync signals.

D-c Restorer. – A so called "d-c restorer" circuit is incorporated into some receivers. As you can see in the block diagram of Fig. 27-1, the d-c restorer is placed between the video amplifier output and the kinescope grid. As you have already learned, the average value of the picture signal is a d-c value that represents the *average* brightness of the transmitted scene. This d-c level may be inserted in the modulator of the television transmitter and effectively radiated with the signal. The d-c level is preserved through all of the r-f and i-f stages of the receiver and is also present in the output of the video detector. However, if any coupling condenser is present anywhere in the circuits between the video detector and the kinescope grid, the d-c level is lost and the scene brightness may not be correctly reproduced.

In receivers using d-c restorer circuits, these usually consist of a diode rectifier and associated R-C circuits. The action of the restorer is to line up the blanking and sync pulses at a common level regardless of scene brightness, and thus re-insert the original d-c value as it appeared at the transmitter.

Some receivers are so designed that no coupling condenser appears after the video detector. In this case a d-c restorer is not needed since there is no loss of the d-c level. Such receivers incorporate video amplifiers which are said to be "direct-coupled", or "d-c coupled". Direct coupled amplifiers have perfect low frequency response down to zero cycles and therefore do not have to be compensated for low frequency response.

Kinescope. – After d-c re-insertion (when used), the video signal of negative sync polarity is applied to the grid of the kinescope. At this point, the signal causes variations in the intensity of the electron beam, which in turn cause light intensity variations on the face of the kinescope. Since the beam is being swept horizontally and vertically during the light intensity variations, a picture is traced on the screen.

Sound I-f. – Now let's go back in the block diagram and follow the sound signal. Depending upon the receiver, the sound signal is taken off in one of two places, as we previously learned. After the sound is taken off by a tuned circuit, it is fed into the first stage of the sound i-f amplifier. Depending upon the sound take-off point, there may be either two or three stages of sound i-f amplification. Remember that the sound signal is *frequency* modulated.

Discriminator. – A special frequency modulation detector must be provided for demodulation. This is usually a "discriminator" circuit. The circuit performs a companion function to the video detector. That is, it extracts the sound information from the frequency modulated i-f carrier wave. After detection, the sound signal passes through a conventional audio amplifier to the loudspeaker.

Audio Amplifier. – The audio amplifier in most sets consists of two stages, a voltage amplifier and a power amplifier. The voltage amplifier may be a high μ triode such as the triode section of the 6AV6 double diode-triode; the power amplifier tube is often a 6K6-GT beam power pentode. It is interesting to note that the frequency response of the audio amplifier in a television set is, in general, superior to that of a conventional broadcast set, because the television sound channel frequency band allocation does not have the limitation present in conventional sound broadcast channels (5 kc) and can utilize audio frequencies up to 15 kc.

AGC. – The picture channel is generally provided with some system of automatic gain control (AGC). This is a circuit which tends to keep the output of the picture r-f and i-f systems constant, regardless of variations in antenna signal. AGC is very important in reducing picture fading, such as "airplane flutter" and video variations produced by other causes. Airplane flutter is a very rapid and annoying variation of picture signal strength due to the presence of nearby flying aircraft.

There are various methods of producing AGC control voltages, some of which will be described in later lessons. In general, however, the principle of AGC is as follows. A d-c voltage is produced by rectifying and filtering the sync and blanking pulse voltages. This d-c voltage is always proportional to the amplitude of the sync and blanking pulses, and therefore proportional to the strength of the received signal. The d-c voltage, which is negative in polarity, is fed back to the grids of the picture i-f and r-f amplifiers. This acts as a bias and controls the gain of these amplifiers. For instance, if the input signal strength should suddenly increase, the rectified negative bias would increase and this would *decrease* the gain of the i-f and r-f amplifiers thus tending to hold the output constant. A decrease in input signal strength would result in a decreased negative bias, an increase of amplifier gain and again to maintain constant receiver output. You can see now, that AGC is a great help in maintaining a picture signal of constant amplitude. AGC is seldom provided for the sound channel of the receiver since the frequency modulation system usually provides sufficient AGC action for normal reception.

Synchronization and Deflection. – Up to now we have been discussing only the actual sound and picture signals. However, as you found out in previous lessons, there are also synchronizing and deflection circuits in the television receiver. Synchronizing circuits are needed to insure that the movement of the electron beam in the receiver kinescope is in step with the corresponding movement of the beam in the camera tubes. The deflection circuits are those which actually cause the movement of the beam, and these in turn are controlled by the synchronizing circuits.

Sync Circuits. – Let us begin at the output of the video amplifier and d-c restorer (if any). As you can see in Fig. 27-1 the entire video signal is present at this point, with the sync pulses having negative polarity. (Some receivers may tap off the signal at other points.) It is now necessary to separate the sync pulses from the rest of the video signal in order that they may be used eventually to synchronize the deflection circuits. A set may have the following type of sync circuits, although this is not meant to be typical of all type receivers. The negative polarity sync signals come first to the sync amplifier, where the entire signal is amplified and inverted 180 degrees. The amplified video signal is then fed into the sync separator, and as shown in the block diagram, the sync pulses are the only portion of the video signal which pass this stage. After the sync separator, the sync pulses pass through the sync limiter. As you can see, this stage actually reduces the amplitude of the sync pulses, but at the same time it removes much of the noise pulses on the signal. It is essential that noise pulses be kept out of the deflection system as much as possible, to prevent possible loss of synchronization. After passing through the sync limiter, the sync pulses are fed into two different circuits, the integrator and the horizontal AFC circuits.

Integrator. – The integrator network is part of the vertical deflection system. It consists of an R-C circuit that effectively separates the vertical synchronizing pulse for each field, which actually consists of a series of six serrated pulses. The integrator network functions so as to make *one* sharp pulse from the six serrated pulses. Since this pulse is formed once each field, it has a repetition rate of 60 cycles per second. This 60 cycle pulse which is formed from signals sent from the transmitter is fed into the vertical sweep oscillator circuit.

Vertical Oscillator. – This is an oscillator circuit capable of generating sweep waveforms at the rate of 60 cps. The unsynchronized frequency of the vertical sweep generator may be varied somewhat above and below 60 cycles. However, the action of the vertical synchronizing pulses is such that they force the vertical sweep generator to operate at 60 cycles, in synchronism with the vertical sweep of the television transmitter.

The waveform from the vertical sweep generator next passes on to the vertical sweep amplifier and from there is applied to the vertical deflecting coils. The action of the coils, in conjunction with the amplifier, is to sweep the scanning beam linearly from top to bottom of the kinescope and back, at 60 cycles per second. At the same time, of course, the horizontal sweep motion is taking place.

Horizontal AFC. – Now let's go back to the output of the sync limiter and trace through the horizontal sweep channel. The horizontal sweep system incorporates an automatic frequency control circuit. The purpose of this circuit is to automatically maintain the frequency of the horizontal sweep oscillator at the correct value as established at the television transmitter. This has two advantages. First, it makes the horizontal oscillator extremely stable and gives it a great deal of immunity from the effects of noise pulses. The noise pulses tend to trigger off the horizontal oscillator at the wrong time, and thus cause "tearing" of the picture on the kinescope. Secondly, it eliminates the necessity of constantly adjusting the horizontal hold control, thus simplifying operation of the receiver to some extent.

Note that the sync pulses from the sync limiter do not go to the horizontal sweep oscillator, but to the AFC circuit. Pulses from the horizontal sweep oscillator and the horizontal output deflection system are also fed to the AFC circuits. (Some receivers, however, may have different arrangements). The combination of these pulses affects the AFC circuit so that it always maintains the horizontal sweep oscillator in correct synchronism at a frequency of 15,750 cycles per second.

The sweep oscillator output drives the horizontal sweep amplifier. The output of the horizontal sweep amplifier is fed into a special horizontal output transformer. This provides the energy to drive the horizontal deflection coils, and also produces the high accelerating voltage necessary to operate the kinescope.

Low Voltage Supply. – In addition to the high voltage supply, there is also a low-voltage power supply. This is of conventional design and supplies power to all filaments, plates and screen grids, as well as fixed bias voltages for some of the tubes.

This completes our block diagram study of the television receiver. As we proceed from now on we shall go into more detail about the various circuits and parts.

THE SUPERHETERODYNE CIRCUIT

27-2. The television receiver, like many others is of the "superheterodyne" type. Before we can really begin to understand how the television receiver works we must be familiar with the principle of a superheterodyne circuit. Therefore, we are going to take time out now to investigate this.

Generally speaking, there are two basic types of receivers: the "tuned r-f", and the "superheterodyne". The tuned r-f receiver is rarely used these days and never for television, so we shall not concern ourselves very much with this type here. For comparison purposes, though, let us first examine a simplified block diagram of a typical tuned r-f (t-r-f) receiver as shown in Fig. 27-2.

T-r-f Receiver. – As you can see, this type of receiver consists of several r-f tuned stages followed by a detector, audio amplifier and speaker, All three radio frequency stages are tuned together, usually by a three gang variable tuning condenser. (A t-r-f receiver may have other than three tuned stages, however.)

There are several important disadvantages of a tuned radio frequency receiver. Perhaps the main one is that all radio frequency stages must be tuned over a wide band of frequencies. This generally means that the r-f circuits cannot be designed to give optimum efficiency, resulting in relatively poor selectivity and sensitivity. Selectivity may be defined as the ability of a receiver to discriminate between the desired signal and undesired signals. The sensitivity of a receiver is a measure of its ability to provide satisfactory output when a weak signal is received in the antenna. The sensitivity and selectivity of a t-r-f receiver may be improved by adding additional tuned stages. However, this makes the receiver unwieldy in size, and creates other problems such as the difficulty in preventing undesired oscillations from occuring.

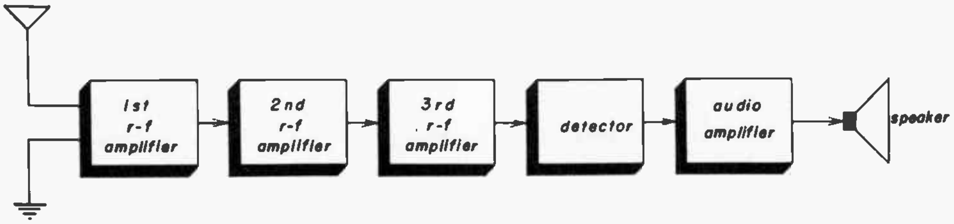

Fig. 27-2

The Superheterodyne Principle. – The disadvantages of the t-r-f receiver may be largely overcome by *reducing* the frequency of the incoming signal after it has been selected by tuned r-f stages, and then amplifying it further in fixed-tuned stages. These fixed-tuned stages are known as intermediate frequency amplifiers, or simply "i-f" amplifiers. Because the i-f amplifier operates at a *fixed* frequency, it is possible to design it to provide the maximum selectivity and sensitivity. The i-f amplifier provides most of the radio frequency gain in the superheterodyne receiver. A further advantage of the superheterodyne receiver is that there is less tendency for r-f oscillations to occur. This is true because r-f amplification takes place at *two* different frequencies, r-f and i-f, and thus reduces the possibility of creating undesired oscillations in the receiver. A simplified block diagram of a superheterodyne receiver is shown here:

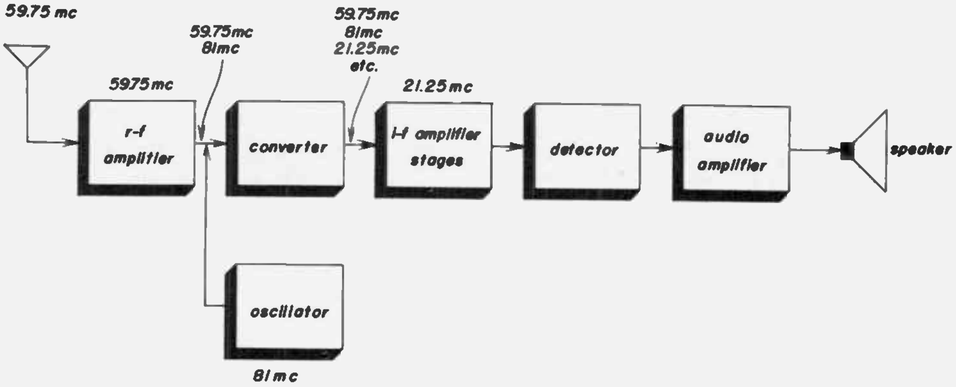

Fig. 27-3

This actually represents the sound portion of a television receiver and the frequencies indicated are those frequently used in television. We have a signal coming in from the antenna at a frequency of 59.75 mc. This is the sound carrier of Channel 2 This signal is selected and amplified by the r-f amplifier which is now tuned to receive 59.75 mc. (Actually it receives the entire Channel 2, 54 to 60 mc).

The stage following the r-f amplifier is called the converter. The *converter* is a special stage unlike any in a t-r-f receiver. First of all, the amount of bias provides approximately Class AB operation on the *non-linear* portion of the characteristic curve. This is very important. Secondly, its input and output circuits are tuned to different frequencies. And thirdly, it has two separate signals fed into its input circuit. One is the incoming signal from the r-f amplifier at 59.75 mc and the other the locally generated sine wave signal from the oscillator at 81 mc. Basically, the function of the converter is to cause heterodyning of the two input frequencies, oscillator and r-f, in order to produce a third frequency in the output, which will be the i-f. Let us take a moment to talk about this phenomenon of producing a third frequency from two others by heterodyning.

Heterodyning and Beats. – First, let's get straightened out about the difference between the terms "beat," frequency and "heterodyne" frequency. These are often used interchangeably but are not the same. As an example, let's take two frequencies of 100 and 101 cycles. We will apply these two frequencies to a *linear* circuit such as a distortionless class A amplifier and see what we have in the output. The output will consist of the algebraic addition of the amplitudes of the two waves. This resultant wave will vary in amplitude at the difference between the two signals, or 1 cycle per second. Note very carefully, however, that the only frequencies present in the output are the original ones, or 100 and 101 cps. The 1 cycle we have been speaking of *cannot* be filtered out and used. It is simply due to the addition and subtraction of the two original waves.

Summarizing, then, we say that when any two, or more, frequencies are applied to a perfectly linear circuit, the *only* frequencies present in the output are the *original* frequencies.

Now let us take the same two frequencies and apply them to a non-linear circuit such as a class AB amplifier. This produces the phenomena known as "heterodyning". When two frequencies are fed into a non-linear circuit, distortion takes place and this distortion has the effect of producing *new* frequencies in the output which were *not* present at the input. These new frequencies may actually be filtered out and used. The most important frequencies present in the output of a non-linear circuit are:

a. The original two frequencies (in this case, 100 and 101 cps).

b. The sum of the two original frequencies (201 cps).

c. The difference between the two original frequencies (1 cps).

d. Many harmonic (or multiple) frequencies.

Unlike the output of a linear circuit, *any* ot these frequencies can be filtered out and used. This is the principle used in a superheterodyne, where two different frequencies are fed into the grid of the converter stage. As we said before, the converter operates class AB, which means that it is a *non-linear* circuit and produces heterodyning.

Looking back at the block diagram of Fig. 27-3 we see that the frequencies of 59-75 and 81 mc are both fed into the converter. The output frequencies from the converter include the original frequencies (59.75, 81 mc), the sum (140.75 mc), the difference (21.25), and many harmonic frequencies. In most superheterodyne receivers, it is desired to utilize the difference frequency as the intermediate frequency, since this is lower than the r-f signal and easier to amplify. In this case the difference frequency is 21.25 mc, and this is chosen as the sound i-f.

We have seen that the output of the converter contains various frequencies. We desire to reject most of these and select only the required i-f, which in our particular example is only the sound i-f of 21.25 mc and its sidebands. Selection of the desired intermediate frequency is accomplished by means of tuned circuits having the correct bandwidth characteristics, to be described later. It is interesting to note that the intermediate frequency still contains the original modulation information practically undistorted.

Picture I-f Amplifier. – In discussing the production of an intermediate frequency, we have thus far concerned ourselves solely with the sound i-f. However, as you know there is also a picture i-f to be produced. Whenever we speak of an i-f, it is assumed that we are including all desired sideband frequencies since these are formed in the same manner as the i-f carrier. When Channel 2 is being received, we have the picture carrier present at 55.25 mc and the sound carrier at 59.75 mc. The oscillator frequency (for many receivers) for Channel 2 will be 81 mc and as we already saw the sound carrier is converted to an i-f of 21.25 mc. Similarly, a picture i-f carrier is produced which is the difference between the picture r-f carrier and the oscillator frequency. This is 81 minus 55.25 mc, or 25.75mc. Of course, the picture i-f sidebands are also reproduced.

It is sometimes confusing to note that although the picture r-f carrier is *lower* than the sound r-f carrier, this condition is reversed in the i-f's, with the picture i-f being *higher* than the sound i-f. However, this is no great mystery since it is simply the results of subtracting two numbers of different magnitudes from a single higher number. The *larger* number subtracted naturally results in a *smaller* resultant, and the *smaller* number subtracted results in a larger resultant. Thus the carriers change relative positions when converted from r-f to i-f. As in the case of the sound i-f frequencies, the picture i-f (25.75 mc and sidebands) is selected and amplified by suitably designed wide band i-f amplifiers.

Now that we have discussed the block diagram of a television receiver and found out what a superheterodyne is, we are going back to examine each section of the TV receiver.

THE FRONT END

27-3. – The r-f unit of a TV receiver is often called the "front end". The front end consists of the r-f amplifier, oscillator and converter stages. The first stage the signal meets is the r-f amplifier. The tube used here is generally a miniature glass type pentode such as the 6AG5. The r-f amplifier stage must pass a very wide band of frequencies in order to accomodate the full width of each channel. This channel width is 6 mc as established by the FCC. A typical response curve at Channel 2 is shown here:

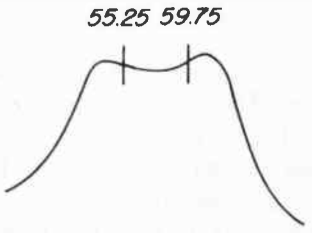

Fig. 27-4

Bandwidth. – The picture carrier (55.25 mc) and the sound carrier (59.75 mc) are marked at the top of the curve. Note the broadness and flatness of the response curve, which is essential for proper amplification. Some idea of the extreme bandwidth required of the r-f amplifier, 6 mc, may be had by comparing it with that of a standard band broadcast receiver, which is only about 10 kc and an FM receiver, which is about 150 kc wide. The wide bandwidth required of the r-f amplifier means that its gain will be quite low, since gain varies inversely with bandwidth. The actual gain of the r-f amplifier varies according to the particular channel in use and decreases toward the higher channels. As an average figure we may say that the gain of the r-f amplifier is about 8.

The r-f amplifier has both its grid and plate circuits tuned. Older models had only the plate circuit tuned. The advantages of also tuning the grid circuit are improved selectivity and rejection of interfering signals. In most of the later models receivers tuning is accomplished by means of a switching arrangement that selects taps on inductances for each channel. Provision is made for alignment by means of variable condensers and inductances. The actual alignment of the r-f tuned circuits is made on only three channels. The other channels should automatically be in alignment when these three (Channels 6, 7, 12) are correctly aligned.

Converter Stage. – As we mentioned before, the converter stage has some unusual operating characteristics, such as class AB bias and different input and output frequencies. The input of the converter is always tuned to the same frequency as the r-f amplifier. That is, it is tuned to the frequency of the desired channel. As in the case of the r-f amplifier, the converter must pass the full 6 mc bandwidth of each channel.

In addition to the r-f signal, the oscillator signal is also present at the converter grid. This is coupled inductively by means of a small coupling loop. With the oscillator frequency 21 mc above the high end of each channel, as a typical value, this is considerably above the frequency of the converter's input tuned circuit. However, the magnitude of the oscillator voltage is realtively high, and the input circuit offers sufficient impedance to develop the desired amount of oscillator voltage at the converter grid.

The tube used for converter service is often the same tube type as the r-f amplifier – the miniature glass pentode 6AG5. Grid leak bias is used for the converter. The cathode of the converter is grounded and the grid is also returned to ground. The r-f signal at the converter grid is too weak to cause any appreciable grid current to be drawn, but the oscillator signal causes a grid-leak bias of from 2 to 6 volts to be developed depending upon the channel and the individual receiver. In the output of the converter stage is the i-f frequency, which is selected by the i-f amplifiers.

Gain. – Because the input and output frequencies are different, the gain of the converter is very low and may be in the order of only 3 or 4.

Tube Noise. – Incidentally, due to the way in which it is operated the converter is responsible for developing more tube noise than any other single tube in the receiver. In view of this fact, the importance of the r-f amplifier is increased because the amplified output of the r-f amplifier is able to override the converter tube noise better than the original unamplified antenna signal. The input circuit of the converter stage is aligned in the same way as the r-f stage. It is only aligned on Channels 6, 7, and 12, the others falling into correct alignment automatically, Actually, the r-f and converter stages are aligned at the same time.

Oscillator Stage. – The oscillator has a very important part to play in any superheterodyne receiver. It provides the signal against which the r-f signal is heterodyned in the converter to produce the i-f. As such, it must not only be of the right frequency, but it must be capable of maintaining this frequency. The ability of an oscillator to maintain a certain frequency over a period of time is known as its "stability". Due to the high frequencies at which the heterodyning oscillator operates in a TV receiver special precautions must be taken to insure its stability.

Oscillator Stability. – The stability of the oscillator is of the utmost importance, since this largely determines the stability of the entire television receiver. If the oscillator frequency should drift, then the intermediate frequencies will change; if the change is great enough reception will be impaired. Some amount of oscillation drift is inevitable, however. To correct for this and also to facilitate tuning, a "fine tuning" control is provided. This is a vernier control of oscillator frequency and its use will be more fully described later.

It should be realized that in any television receiver the oscillator drift will be most serious during perhaps the first 30 minutes after a "cold" set is first turned on. During this warm up period, various parts and tubes are heating up and expanding. This expansion causes small changes in the values of resistors, coils and condensers, which in turn causes the oscillator frequency to drift. Thus, you will find that in many receivers you may have to readjust the fine tuning control during the first half-hour of operation, but possibly not at all after that.

Some steps that may be taken to reduce drift are temperature compensation, and the choice of suitable tube circuits and parts. The oscillator tube used in many receivers is the 6J6 dual-triode miniature glass type. Both triode sections are used when the oscillator is the "push-pull" type. The use of a push-pull oscillator provides better frequency stability than can generally be obtained from a single tube oscillator of this type. Frequency stability of the oscillator is also improved by mounting the oscillator coils and condensers in a shielded compartment away from the heating effects of tubes and other components. This arrangement provides a more even temperature level in the oscillator circuit, thus improving oscillator stability. There is no gain in the oscillator, of course, since this circuit is designed only to produce a single frequency sine wave signal and is not designed to amplify the incoming signal.

I-f CIRCUITS

27-4. After the signal leaves the converter, it is fed into the i-f stages. Since the sound i-f section is simpler than the picture i-f, we will discuss this first. To assist us in this, a complete block diagram of the sound i-f section is given here:

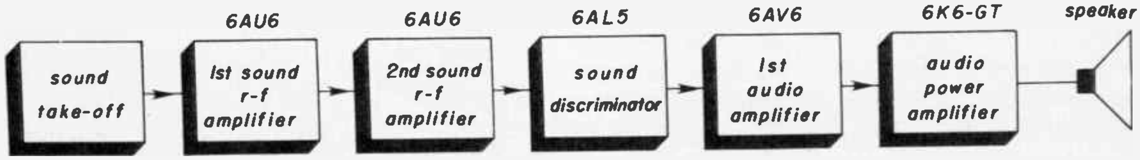

Fig. 27-5

After leaving the sound take-off circuit, which separates the sound from the picture i-f frequency, the signal is fed into the first sound i-f amplifier. This amplifier often employs a 6AU6 miniature glass pentode, and has tuned grid and plate circuits. These circuits are peaked at the sound i-f, but are designed to have a bandwidth of about 200 kc. in order to pass all of the important sideband frequencies of the frequency modulated sound i-f signal. We have already discussed in Lesson 21 the principles of amplitude modulation, but so far have said little about *frequency* modulation. Let us therefore, take a minute or so to see what this FM is all about.

Frequency Modulation. – You will remember, that in amplitude modulation (AM) we started out with an r-f carrier wave and an audio modulating signal. By means of the modulator, we made the *amplitude* of the carrier vary in accordance with the audio information. In frequency modulation we start out with the *same* two elements, r-f carrier and audio modulating signal. However, instead of having the audio signal change the *amplitude* of the carrier, we make it change the instantaneous *frequency* of the carrier. This idea can be made clearer with the aid of Fig. 27-6.

Note first of all, that in all portions of the modulation cycle, the *amplitude* of the FM wave remains *constant*. This is totally unlike the AM wave where the amplitude is constantly varying. From A to B on the modulating (audio) signal, there is no variation of audio and the i-f carrier remains constant at its original or "resting" frequency of 21.25 mc as an example. At B the audio voltage begins to increase, going into the positive portion of the cycle. This acts through the FM modulator in such a way as to increase the frequency of the transmitted signal. (In other systems, the frequency might decrease first rather than increase.)

The *rate* at which the frequency increases is exactly the same as the rate of the audio cycles. As the audio cycle approaches its maximum amplitude through C, the frequency of the i-f carrier continues to increase until at point D it reaches its maximum value of 21.50 mc. We have been speaking of the i-f carrier here because this now concerns us directly. However, the same sort of variations take place in the r-f FM carrier before heterodyning. After the audio wave reaches its maximum positive peak, it begins to decrease in value. This now causes the frequency of the i-f carrier to decrease at the same rate from its maximum value of 21.50 mc, at point D, to the

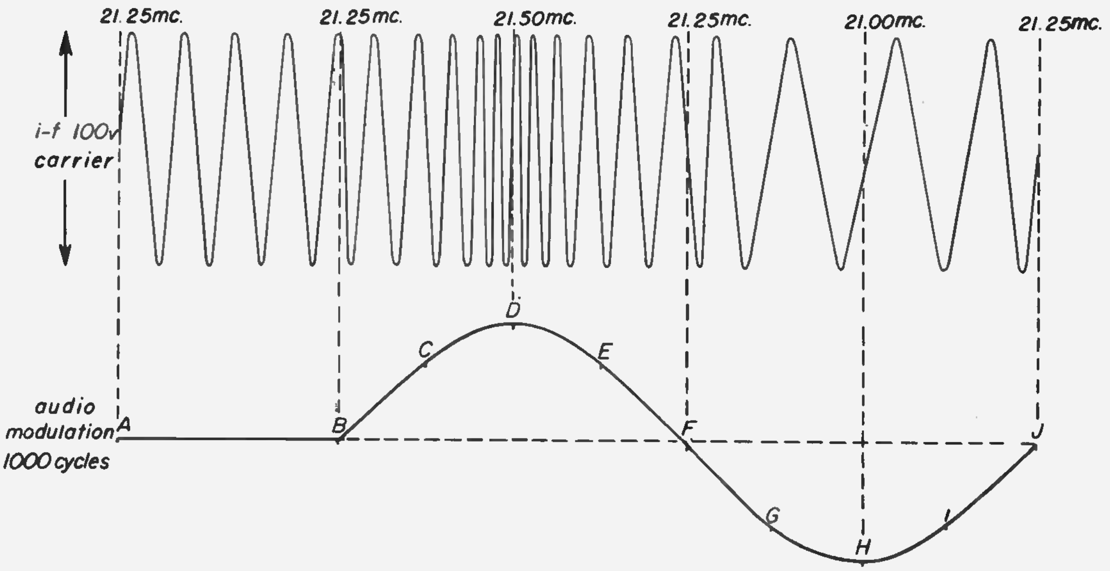

Fig. 27-6

"resting" frequency of 21.25 mc at point E. The audio wave then begins to go in the negative direction. This causes the i-f carrier to go *below* the resting frequency so that by the time we reach point H, the i-f carrier frequency has dropped to 21.00 mc. Note, that the most negative value of audio signal produces the lowest i-f carrier frequency. From point H, the negative value of audio wave decreases and this causes the i-f carrier frequency to start increasing in value until at point J it returns again to the resting value of 21.25 mc. This completes one full cycle of a frequency modulated wave.

In Fig. 27-6 it is indicated that the audio frequency is 1000 cps. This means that the carrier will go through its frequency excursions at the rate of 1000 times per second. We have seen that the i-f carrier frequency has been caused to change plus and minus 25 kc. This is not always the case but was chosen because in television FM broadcasting, it represents the condition of 100 percent modulation. (In standard FM broadcasting, plus and minus 75 kc is 100 percent modulation.)

We have seen that the frequency of the audio wave governs the *rate of change* of frequency of the carrier wave. If is very important that you understand and remember this. Another important point is this; the *amount* of frequency change, or "deviation", is proportional to the *amplitude* of the audio wave. Remember, the rate of change of carrier frequency is that of the audio frequency. The *amount* of change depends on the audio *amplitude*. We have repeated these points because of their importance.

Bandwidth of the Sound I-f Amplifier. – We mentioned before that the bandwidth of the sound i-f amplifiers is about 200 kc. This may seem strange in view of the fact that the sidebands of the FM sound signal extend to only plus and minus 25 kc, or a total of only 50 kc. It might seem at first thought that since the required bandwidth is only 50 kc, the sound i-f's would be designed to pass only this in order to obtain maximum gain per stage.

We must remember though that two i-f's, sound and pix, are produced simultaneously and since perfect alignment is not possible, some allowance must be made to simplify tuning somewhat when operating the fine tuning control, so that it will not be quite so critical. Another factor is oscillator drift. Any slight drift would result in distortion of the sound if the sound i-f bandwidth were not widened somewhat. On the other hand, this drift usually does not cause a perceptible change in picture quality to the average viewer. For these reasons the bandwidth of the sound i-f amplifiers is made about 4 or 5 times greater than the 50 kc bandwidth of the signal.

The gain of an average sound i-f amplifier is in the order of 35. The overall gain for the two sound i-f stages is therefore 35 times 35 or about 1225. This figure is not necessarily intended to be the correct value for all receivers, but is simply given so that you will get some idea of the gain of two stages.

Noise Reduction. – You will find that the bias for the first sound i-f amplifier is the conventional cathode bias, but the second stage employs grid leak bias. This type of bias, in conjunction with a low screen grid voltage, gives the second stage the ability to remove most of the noise pulses from the FM signal, thus helping to provide the advantage of noise free reception. The sound i-f amplifiers are coupled by a tuned transformer resonant at the intermediate frequency. A simplified diagram of one sound i-f stage is shown here:

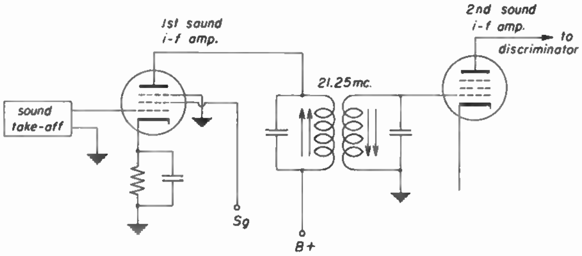

Fig. 27-7

Discriminator. – The stage following the sound i-f amplifier is the *sound discriminator.* This is the FM detector. It is coupled to the second sound i-f amplifier through a special discriminator transformer. The transformer is tuned to the sound i-f, with a center-tapped secondary that is connected into the sound discriminator tube, a duo-diode. The sound discriminator circuit transforms the variations of frequency in the i-f signal back into the original audio signal.

These audio variations are RC coupled to the first audio amplifier. The gain of this audio (voltage) amplifier is about 70. The output of the voltage amplifier is RC coupled into the audio *power* amplifier tube, which is in turn transformer coupled to the loudspeaker. A maximum audio power output of about 3 watts may be obtained from the output stage.

This completes our discussion of the sound section of the receiver and we are now ready to turn our attention to the picture section.

The Picture I-f Amplifier. – The picture i-f amplifier is considerably more complicated than the sound i-f stages. First of all, it must have a pass band greater than 4 mc. It must reject the sound i-f and certain other undesired frequencies, and also have a special shape to its overall characteristic curve. The response of a typical picture i-f amplifier is shown here:

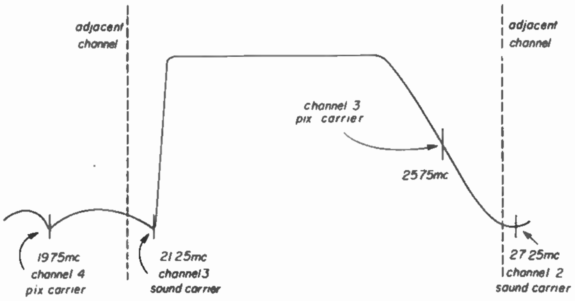

Fig. 27-8

This response is the result of four stages of tuned i-f amplifiers and several traps, which we shall discuss shortly. (The i-f amplifier and frequencies discussed here are typical examples, but they may be different in some sets.) Let's take a look at the response curve and note several important points. First of all, observe that the picture i-f carrier frequency of 25.75 mc is not situated at the top on the flat portion of the curve but is about 40 percent down. We cannot go into any detailed explanation of this now, other than to say that it is necessary to provide linear output from the picture detector. From the 25.75 mc mark on the curve, the response to the upper left portion of the curve includes a bandwidth of about 4 mc. If you will remember, this is needed for full picture detail reproduction.

The sound i-f of 21.25 mc is shown to have practically zero response, due to the effect of two traps tuned to reject 21.25 mc from the picture circuit. This is important, because if the sound signals reach the kinescope they will cause horizontal bars to appear in the picture.

Two other frequencies are marked on the curve, These are 19.75 mc and 27.25 mc. Traps are provided to reject both of these frequencies to prevent adjacent channels from causing interference in the picture. More will be said about this in a later lesson, but as you can see, the 19.75 mc i-f is produced by beating the adjacent *higher* channel's picture carrier against the local oscillator, while the 27.25 mc i-f is produced by beating the adjacent *lower* channel's sound carrier against the local oscillator. A detailed block diagram of the picture i-f system is shown in Fig. 27-9.

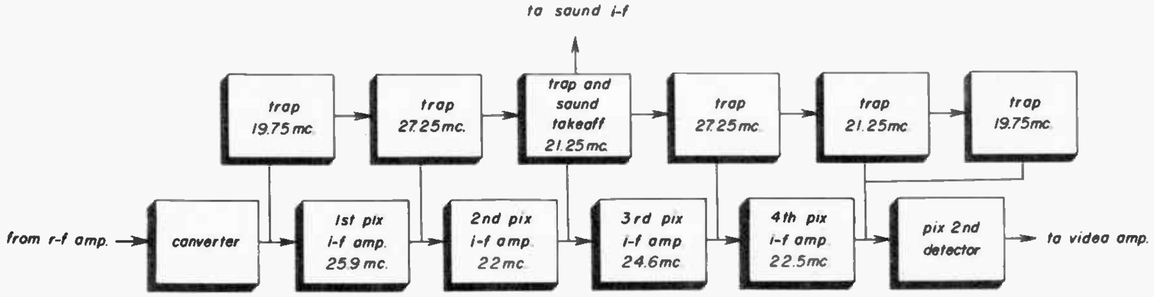

Fig. 27-9

Staggered Tuning. – This i-f amplifier is the so called "stagger-tuned" type. This does not mean that the designers were inebriated, but that each stage of i-f is tuned to a different frequency. By examining the block diagram you will note that the four i-f amplifiers are tuned to the frequencies of 25.9 mc, 22 mc, 24.6 mc and 22.5 mc, respectively. Stagger tuning is a method of obtaining the wide band response needed, with the advantages of simplicity in design and construction, and ease of alignment. The picture i-f stages are relatively easy to align since each stage is *peaked* at one definite frequency.

Wave Traps. – There are six traps in the picture i-f system shown in Fig. 27-9. The first one precedes the first picture i-f amplifier and is tuned to 19.75 mc. As we said before, this trap is designed to reject signals due to the adjacent higher channel picture carrier. The trap is the so called "absorption" type, and consists of a tuned circuit inductively coupled to the grid circuit of the first picture i-f amplifier. The second trap is tuned to 27.25 mc and is coupled to the plate coil of the first picture i-f amplifier. This is also of the *absorption* type, as are all of the i-f traps in these receivers. The function of this trap is to reject the signals formed by the adjacent lower channel sound carrier. The next trap has a double function. (This may be different in some receivers.) It is tuned to 21.25 mc, and coupled to the plate coil of the second picture i-f amplifier. This trap acts to reject the sound i-f from the picture channel and has the additional function of a sound take-off circuit. (In some receivers the sound is taken off immediately after the converter.) The fourth trap is coupled to the plate coil of the third picture i-f amplifier, and is a duplicate of the second trap. It was found that two traps at this frequency were required to provide sufficient rejection. The fifth trap is similar to the third and is tuned to 21.25 mc. It is coupled into the *cathode* circuit of the fourth picture i-f amplifier. The sixth and last i-f trap is coupled into the cathode of the picture detector and is tuned to 19.75 mc. This is the second trap at this frequency in the picture i-f strip, to provide additional rejection.

A simplified diagram of one picture i-f stage with a trap is shown here:

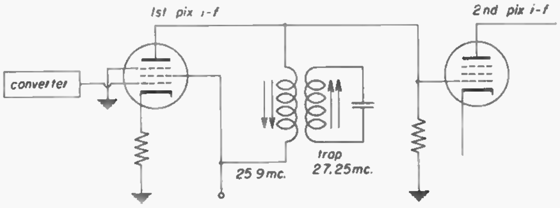

Fig. 27-10

Tuning of the plate circuit is accomplished by varying a slug in the plate coil. Note how the absorption trap is inductively coupled to the plate coil and absorbs energy at 27.25 mc.

Picture I-f Gain. – The gain of each picture i-f stage is less than that of a sound i-f stage because of the wider bandwidth required. The gain of each of the 4 stages is in the order of 12 or so, which makes the overall gain of the entire picture i-f amplifier about 20,000.

AUTOMATIC GAIN CONTROL

27-5. As we mentioned before, many receivers employ automatic gain control circuits in the r-f and picture i-f amplifiers. The advantages of this have already been given. While many systems of AGC exist, the circuit described here is one of several types used in TV receivers. The block diagram looks like this:

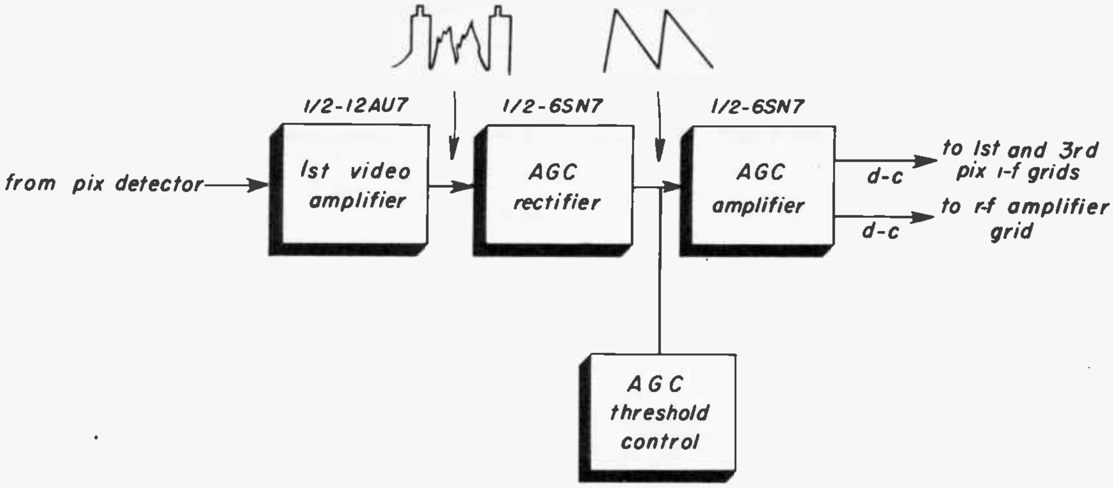

Fig. 27-11

Circuit Operation. – The video signal, with positive sync polarity, is tapped off the output of the 1st video amplifier and fed into the grid of the AGC rectifier tube. This is one triode section of a 6SN7. There is a fixed bias of about 11 volts on this tube, which with a plate voltage of 80 volts, places the tube below cut off in the absence of grid signal. The bias is enough to allow only the positive sync pulses to cause plate current flow. This is important because the AGC voltage depends upon the amplitude of sync pulses, these being the only fixed level reference voltages in the video signal. The output of the AGC rectifier (for AGC purposes) is taken from the cathode.

As shown in Fig. 27-11, the cathode signal is a sawtooth wave. The *average value* of this sawtooth becomes more *positive* as the amplitude of the sync pulses (and the entire video signal) becomes greater. The sawtooth wave from the cathode of the AGC rectifier is fed into the grid of the AGC amplifier. This stage is essentially a d-c amplifier. Due to the very extensive filtering in the plate circuit, the only output from the AGC amplifier is a d-c voltage proportional to the amplitude of the sync pulses. However, the polarity of the output of the AGC amplifier is *negative*. This is applied as bias to the r-f and i-f amplifiers.

Briefly, the action of the AGC is this: Suppose that for some reason (fading, etc.) the antenna signal should *increase*. This means that the amplitude of the sync pulses will increase. The increase in sync pulse amplitude applied to the AGC rectifier will cause the average value of the sawtooth in the cathode to become more positive. This more positive value is applied to the grid of the AGC amplifier and causes the plate of the AGC amplifier to become more negative. The increased *negative* voltage is applied to the r-f and i-f amplifiers and reduces their gain so that the output signal remains at about the original amplitude. In the event that the antenna signal had *decreased*, the output of the AGC amplifier would have become *less* negative, *increasing* the gain of the r-f and i-f amplifiers and thus bringing *up* the output signal strength near the original value.

An AGC "threshold" control will be found between the cathode of the AGC rectifier and the grid of the AGC amplifier. This control varies the d-c bias on the AGC amplifier and provides a means of adjusting the AGC system for the proper operating range for both weak and strong signals.

An important point to keep in mind is the fact that although other AGC systems may use different circuit arrangements, they operate according to the same basic principles.

PICTURE DETECTOR & VIDEO AMPLIFIER

27-6. A complete block diagram of the picture second detector and video amplifier section is shown in Fig. 27-12.

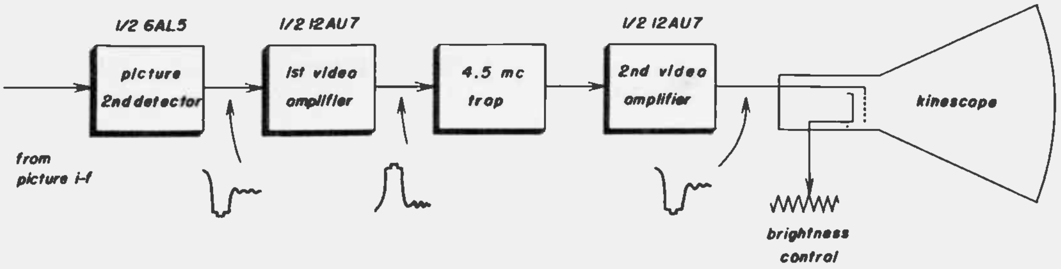

Fig. 27-12

The picture second detector utilizes one diode section of a 6AL5 dual diode tube. This is an AM detector, since the picture information is amplitude modulated. The output of the diode detector is coupled into the grid of the first video amplifier. This coupling may be accomplished either capacitively or by direct coupling, depending upon the particular receiver. The diode detector's output contains the sync and blanking pulses as well as picture information. The picture information has frequencies as low as 30 cycles, or less, and as high as 4 mc, or more. Therefore, the video amplifier, which amplifies the detector output, must be capable of passing this wide band of frequencies (30 to 4,000,000 cps.). Otherwise, the picture quality will be impaired. Generally speaking, two types of video amplifiers are used.

Direct Coupling. – One type of video amplifier circuit uses direct coupling from the video detector to the kinescope grid. This means there are no coupling condensers present between these two points. This is made possible by a voltage distribution system that provides correct operating voltage for all of the tubes involved.

The advantages of direct coupling are the almost perfect low frequency response that can be obtained, and elimination of the need for a d-c restorer circuit. However, the direct coupled amplifier is more difficult to service because its operating potentials are much more critical than in a capacitively coupled amplifier.

There are generally two stages of video amplification employed in either the direct-coupled or a-c coupled types to provide the desired gain. The high frequency response for either type of video amplifier is maintained by the use of peaking coils in the plate circuit.

A-c Coupling. – The capacitively coupled amplifier is more stable and easier to service than the direct-coupled type. Because of the capacitive coupling, however, it must be specially compensated for low frequencies. This type of video amplifier looks very much like an ordinary R-c coupled audio amplifier, except for the high and low frequency compensating circuits.

When an a-c coupled video amplifier is used, a d-c restorer circuit is generally employed to provide the proper picture background illumination corresponding to very slow variations in brightness. This will be discussed shortly.

4.5 mc Trap. – Between the first and second video amplifier in Fig. 4-12 you will find a 4.5 mc trap. The need for such a trap is not immediately obvious, so let's see why it is used. We know that the sound and picture carriers are always 4.5 mc apart. This is true for the r-f and i-f carriers. While it is true that traps are provided to reject the sound i-f from the picture channel, the effectiveness of such traps depends to a large extent upon the correct setting of the "fine-tuning" control. Since this is a vernier control of oscillator frequency, it determines (within limits) the actual i-f's which are produced. All the traps are fixed tuned to one frequency and if the oscillator frequency is not exactly right, the i-f traps cannot function properly.

Some slight misadjustment of the fine tuning control is inevitable at times, so that we may expect some of the sound i-f signal to get through the picture i-f stages. The sound and picture i-f carriers are 4.5 mc apart. These frequencies are heterodyned in the picture second detector and produce the difference frequency of 4.5 mc in the detector output. If this 4.5 mc signal is not rejected, it will reach the kinescope grid and produce an interference pattern of fine vertical lines. These lines can usually be removed by critical tuning of the fine tuning control, but the average viewer either doesn't know this, or doesn't want to be bothered. The addition of the 4.5 mc trap removes this interference and therefore makes the receiver somewhat less critical in tuning.

Receiver Gain. – The gain of the first video amplifier is about 3 and that of the second about 5. This makes the total gain 3 × 5, or about 15 for the video amplifiers illustrated in Fig. 27-12.

Let's see what all these gain figures add up to. At the kinescope grid we need about 50 volts, peak-to-peak, of picture signal. To obtain this we need a certain amount of signal fed into the r-f amplifier from the antenna. Let's figure out how much. First we'll calculate the total gain of the entire receiver through the picture channel. This is done by multiplying the gains of each individual section, thus:

1. The gain of the r-f amplifier times the gain of the converter equals 8 × 4, or 32. This is the gain of the *front end.*
2. The gain of the front end times the gain of the picture i-f amplifiers equals 32 × 20,000, or 640,000. This is the gain of the entire r-f, i-f portion of the receiver.
3. The gain of the r-f, i-f portion times the gain of the video amplifier equals 640,000 × 15 or 9,600,000.

Now, the required input antenna signal to provide 50 volts at the kinescope grid equals $\frac{50}{9,600,000}$ volts or about 5 microvolts. A considerably larger value of antenna signal is desirable, however, to provide a satisfactory signal to noise ratio.

D-C RESTORATION

27-7. Not all television receivers use direct coupled video amplifiers, and such receivers require a d-c restorer circuit. There are various circuit arrangements that can be used to accomplish d-c restoration, but perhaps the most common one is a diode connected between the last video amplifier and the grid of the kinescope. It is not our purpose in this lesson to discuss actual circuits of d-c restorers but rather to determine why they may be required in receivers not using direct coupling. We stated previously that if any coupling condenser was used between the output of the video detector and the kinescope grid, d-c restoration would be necessary.

Since the condenser is the culprit in this case, let's see what it does to the signal is a simplified manner. First of all, let us state that *if any waveshape is applied to a simple RC coupling circuit, the condenser will charge to the average value of the input wave.* Furthermore, because this average valve is the d-c value of the input waveshape it will not exist on the output side of the condenser. Consequently, a new average value will exist in the output.

Let's examine this situation in terms of a simple sine wave signal in an RC coupled amplifier, as shown here:

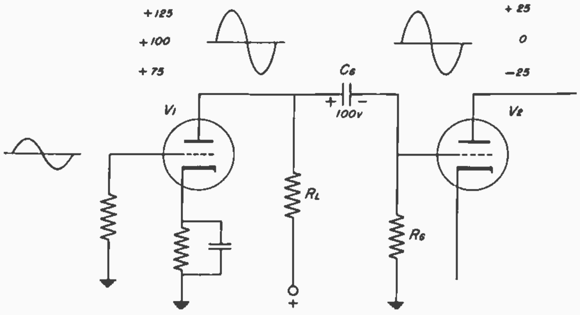

Fig. 27-13

In the plate circuit of V1 we have a sine wave signal with a peak-to-peak value of 50 volts. Due to the plate supply voltage, the signal varies from plus 100 v upward to 125 v, and downward to 75 v. The average value of this signal is 100 v, since this is a symmetrical sine wave. The condenser C_g charges to this average value of 100 v as indicated in the figure.

Now, let's look at the signal as it appears on the grid of V_2. We still have the same 50 v peak-to-peak signal, *but* (and this is a big "but"), the average value is completely different. It is now *zero,* whereas originally it was 100 v. In other words, the original d-c level has been *lost* in the condenser.

This situation is actually desirable in amplifiers because it removes the B plus voltage from the grid of the following stage. In a television signal, however, losing the d-c level can cause errors in brightness level and other effects previously mentioned.

So far we have only seen the effects of a simple *sine wave* signal passing through a condenser. However, the video signal consists of unsymmetrical pulses and video information, which may act differently than a simple sine wave in an RC circuit. Let's look at this simplified drawing of a video signal representing a couple of lines of a scene having *high* average brightness.

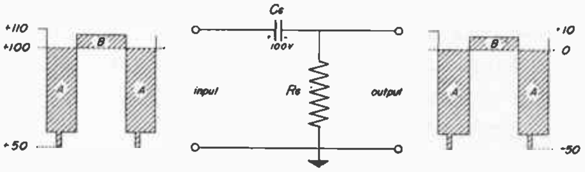

Fig. 27-14

The average value of this type of signal is found by drawing a horizontal line making areas A and B equal. As shown, this causes the signal (on the plate) to vary from plus 100 v upward to 110 v and downward from plus 100 v to 50 v. The peak-to-peak value of the signal is 60 v and the average value 100 v.

Now, pass this signal through an RC network and let's see what happens. The condenser, as before, charges to the average value of the signal, or 100 v. The output signal with the d-c blocked still has a peak-to-peak value of 60 v, but now varies around an average value of *zero* volts to plus 10 v and minus 50 v. So what? This doesn't look any worse than the sine wave case previously given. And it wouldn't be if all the lines were exactly the same as this one. Of course they aren't for a typical image.

Suppose we have the extreme case of one line of high average brightness followed by one line of low average brightness as shown here:

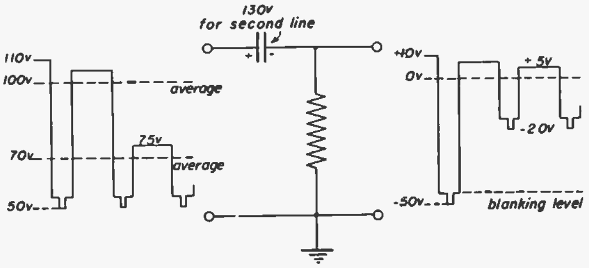

Fig. 27-15

As before, the line of high average brightness will vary around the average of zero to plus 10 v and minus 50 v. Now, along comes a line of *low* average brightness. This line of picture information has a different waveshape and therefore has a different average value. As you can see it is now 70 v instead of 100 v. The condenser C_g now charges up to the average value of 70 volts, the *new* average value. The peak-to-peak value of the new line is 25 v, going from plus 75 v to 50 v.

This same value is passed through the condenser but without the d-c average of 70 v. The peak-to-peak signal on the output side of the condenser is also 25 v but has assumed a *zero* average, the same as the first line. The line of low average brightness now varies from zero between plus 5 v and minus 20 v. *But* notice what has happened to the sync and blanking pulses. They are *no longer* lined up at a common level as they were at the transmitter. Think what this means in terms of kinescope operation. Assuming that the first blanking pulse will drive the kinescope to cutoff (black), it is obvious that the second pulse will not. Not only that, but the line that should have been quite dark will now be almost as bright as the first line.

What can we do to correct this situation? The answer is very simple. Just make the sync and blanking pulses line up and everything will be cured. Fortunately, the solution is not too difficult. A simple method of doing this is to place a diode directly across the output circuit as shown here:

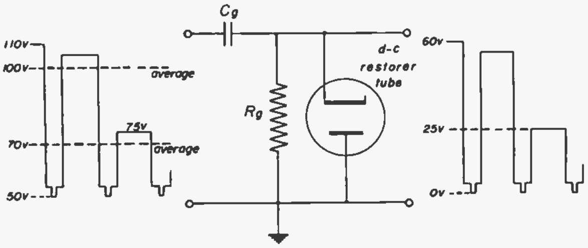

Fig. 27-16

Diode Restorer. – The function of the diode is to prevent the condenser from charging to the average value of signal, since this is what started all the trouble. You will note that the cathode of the diode is connected to one side of the condenser, while the plate of the diode is grounded. This means that whenever the cathode goes more *negative* than the plate the diode conducts and charges the condenser to the *peak* value of the signal. The peak value is a function of the sync and blanking pulse level. Therefore, the condenser is always charged to a voltage proportional to sync pulses rather than to some *average* value.

This *peak charging* action of the diode causes all of the sync and blanking pulses to line up at a common level and thus has the effect of "restoring" the d-c component. Any d-c restoring must necessarily be done in the grid circuit of the kinescope when direct coupling is not used, to prevent the d-c level from being lost in a following condenser. The d-c restorer circuit we have discussed here is not an actual one from a receiver but is merely a simplified example.

SYNC SEPARATING CIRCUITS

27-8. Before the horizontal and vertical synchronizing pulses can be used in the receiver, they must first be separated from the composite video signal. In addition, it is desirable to remove the noise riding on these pulses, since noise voltage may tend to throw the receiver out of sync. A complete block diagram of a typical sync separating and noise limiting circuit is given here. This circuit arrangement may be different in other receivers.

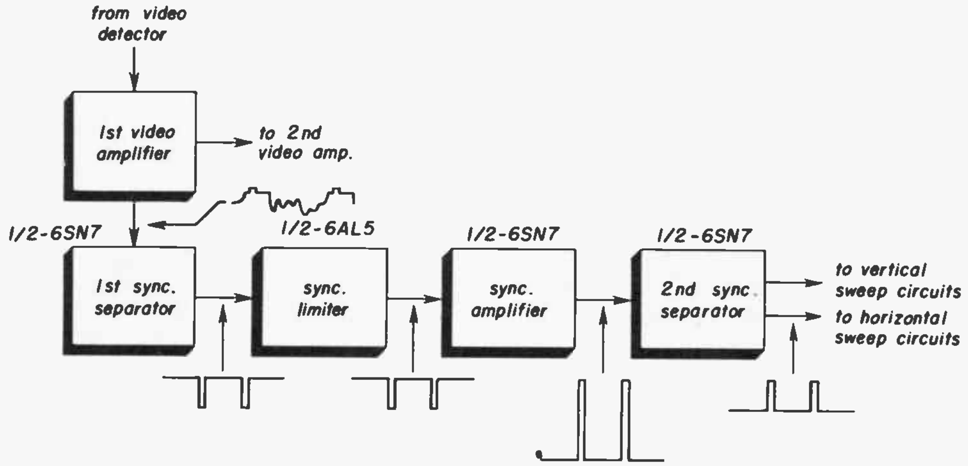

Fig. 27-17

The output of the first video amplifier, with positive sync polarity, is tapped off and fed into the stage labeled "first sync separator". This is a triode (½ of a 6SN7) operating with a plate voltage of 81 v and a *fixed* bias of about 10 v. These conditions place the tube considerably below cut-off in the absence of grid signal. The circuit is designed to remove most of the video signal.

This effectively eliminates practically everything but the sync pulses in the output of this stage, as can be seen from the waveforms in Fig. 27-17. The sync limiter stage which follows acts to compress the grid signal of the next stage to a predetermined value. This permits any remaining video signal to be removed by plate current saturation, while amplifying only the sync pulses. The shape and polarity of the sync signal are not affected by this limiter. After the sync limiter, the sync pulses are fed into the sync amplifier. This is a fairly conventional triode amplifier, which increases the sync amplitude from about 20 v to about 110 v output. Of course, the polarity is reversed due to the tube action, and the sync polarity is now *positive*. This high amplitude sync signal is next fed into the second sync separator. This is a cathode follower stage which clips the amplitude of the sync pulses from 110 v down to about 11 v. This action is effective in reducing the noise on the sync pulses, and in providing sync pulses of constant amplitude. A cathode follower circuit is useful here because it does *not* invert the polarity of the sync pulses, which must be positive at the output. Also, the cathode follower stage is better able to maintain the square shape of the pulses, compared to a conventional amplifier circuit. The output of the second sync separator feeds both the vertical and horizontal sweep circuits.

VERTICAL SWEEP CIRCUITS

27-9. The sync signal output from the second sync separator is fed to several circuits. One of these is the vertical sweep channel. This includes the integrator network, vertical sweep oscillator and discharge tube, vertical sweep output tube and transformer, and the vertical deflection yoke coils. A complete block diagram is shown in Fig. 27-18.

Integrator. – The first circuit of the vertical channel the pulses are fed into, is the integrator network. All of the pulses – horizontal, vertical and equalizing – are fed into the integrator. However, the R-C integrator network is designed to react specifically to the 6 vertical serrated pulses in each field. These are the only ones shown in the block diagram of Fig. 27-18. Each group of 6 vertical serrated pulses in the integrator forms one composite pulse. Thus, there

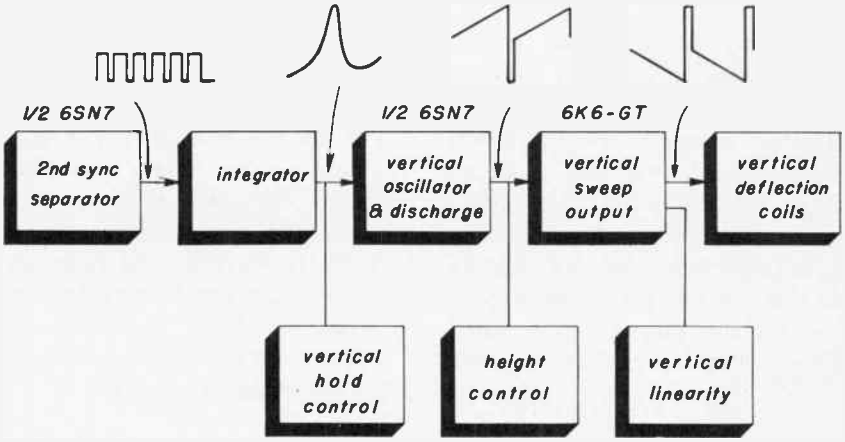

Fig. 27-18

are 60 of these composite vertical pulses formed each second. These constitute the actual vertical oscillator synchronizing pulses. The horizontal synchronizing pulses do not affect the integrator circuit to any practical degree and so do not affect the synchronization of the vertical sweep circuits.

Vertical **Oscillator.** – The next tube is a dual purpose type in many receivers, serving both as a *blocking oscillator* and a *discharge tube*. In its function as a blocking oscillator, it produces oscillating waveforms as shown in Fig. 27-19. This is a "free-running" oscillator. In the absence of sync signals it continues to function and provide a scanning raster on the kinescope face with the horizontal sweep. This is important to prevent "spot-burning" of the face of the kinescope when there is no signal.

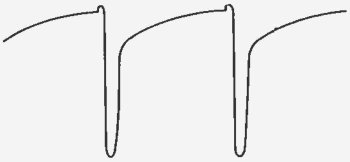

Fig. 27-19

Hold Control. – The frequency of the vertical oscillator may be adjusted above and below 60 cps by means of the vertical *hold* control. This control provides a means for the viewer to adjust the vertical oscillator frequency to lock in with the vertical synchronizing pulses. Usually, the free-running frequency is adjusted to be slightly *lower* than 60 cps, since it will lock in best with the vertical sync pulses under this condition. The exact manner in which this is accomplished will be described in detail in a later lesson.

The same tube used as a blocking oscillator also functions as a discharge tube. It causes a condenser to be discharged, once each cycle, the condenser thereafter recharging through the power supply for the remainder of the cycle. This, of course, is repeated 60 times per second. The action of discharging and charging the condenser in series with resistance results in the formation of the *trapezoidal* waveshape, shown in the block diagram in Fig. 4-18. This waveshape is needed to cause a sawtooth current to flow through the vertical deflecting coils.

Height Control. – A height control is included in the charging circuit of the sweep generator. This control changes the time constant of the condenser charging circuit and, therefore, the amplitude of the sawtooth portion of the trapezoidal wave. This, in turn, changes the vertical height of the picture on the kinescope. The trapezoidal wave is fed into the grid of the 6K6-GT vertical sweep output tube which provides the actual current through the vertical deflection coils to produce the vertical sweep of the kinescope electron beam.

Linearity Control. – A vertical linearity control is connected into the cathode circuit of the vertical sweep output tube to vary the bias. This provides a means of controlling the linearity of the picture, in the vertical direction, by shifting the operating point of the vertical output tube up or down its characteristic curve.

HORIZONTAL DEFLECTION CIRCUITS

27-10. Now that we have looked at the vertical deflection circuits, the next logical step is to go through the horizontal deflection circuits. These are more complicated because the horizontal system includes additional features, such as automatic frequency control and the high voltage transformer. Of course, we are not able to go into any great detail at this time, but will simply explain enough so that you can get a general idea of the functioning of these circuits. A detailed block diagram of the horizontal circuits is given here:

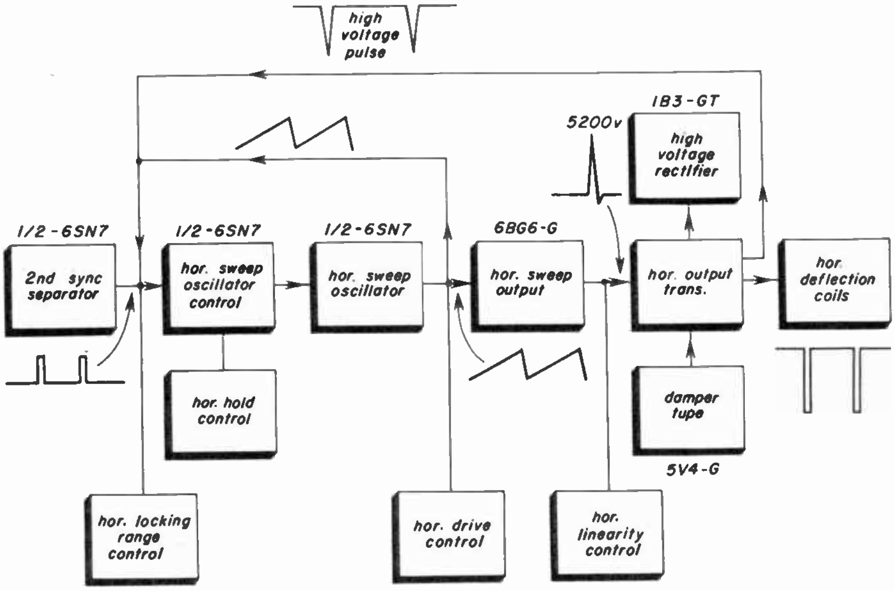

Fig. 27-20

As was the case in the vertical sweep circuits, we again start with the second sync separator. Positive sync pulses are fed into the horizontal sweep oscillator control tube, which provides an automatic frequency control voltage for the horizontal sweep circuits. Other signals are also fed into the control tube. These include a high-voltage negative pulse from the secondary of the horizontal output transformer and a sawtooth wave from the output of the horizontal sweep oscillator. All three of these pulses are combined at the grid of the control tube.

The phase and amplitude of the three pulses causes a certain amount of plate current to flow in the control tube. This plate current in turn produces a cathode voltage which is coupled to the grid of the horizontal sweep oscillator tube. The magnitude of the cathode voltage is always such that it causes the horizontal sweep oscillator to be synchronized in step with the horizontal sync pulses. Thus, a means of obtaining automatic frequency control of horizontal sweep is obtained. This AFC has two main advantages. It greatly improves the immunity of the horizontal sweep circuits from noise pulses and other interference. Also, it relieves the viewer of the necessity of adjusting the horizontal hold control when changing stations.

Horizontal Controls. – Two controls are associated with the horizontal AFC circuit. These are the *horizontal locking range* and the *horizontal hold controls*. The locking range control is located at the rear of the chassis and is a screw driver adjustment. The horizontal hold control is a front panel adjustment, provided for the viewer's use in making occasional adjustments for holding the horizontal synchronization. More details on these circuits will be given in later lessons.

Horizontal Sweep Oscillator. – The horizontal sweep oscillator proper, is a blocking oscillator type of circuit, similar in principle to the vertical oscillator. Its output circuit produces a sawtooth waveform which is fed into the horizontal sweep output tube, a 6BG6-G.

Horizontal Output Circuit. – A "horizontal drive" control is connected in the input circuit of the horizontal output tube. This control regulates the amplitude of input signal and causes variations in horizontal width and linearity of the kinescope picture. The output tube provides the energy for horizontal scanning and for the high voltage power supply. The high voltage is obtained from positive pulses (15,750 per second) formed during the horizontal retrace time. A special horizontal output transformer is utilized. By means of several windings, the output transformer, provides high voltage for the kinescope which is rectified by a type 1B3-GT high voltage rectifier, filament power for the 1B3-GT and the energy to operate the horizontal deflection coils. A special system of horizontal deflection is used which permits considerable energy saving. The 5V4-G damper tube is a part of this special system and its operation will be described in a later lesson. The horizontal output circuit includes rear chassis controls for adjusting the horizontal linearity and width of the kinescope picture.

POWER SUPPLIES

27-11: Two power supplies are used in television receivers. One is the *low-voltage* power supply, which supplies voltages ranging in some sets from plus 215 v to minus 120 v for all tubes, and furnishes energy for all filaments except the high-voltage rectifier. The other power supply is the "high-voltage" supply, which furnishes only the high accelerating voltage for the kinescope.

Low Voltage Supply. – The low voltage power supply is the conventional full wave type using one or two 5U4G rectifier tubes. Very extensive filtering is employed since it is necessary to keep all traces of hum effects out of the picture. It is interesting to note that the focus coil in some receivers obtains its energy by acting as a second filter choke for the low-voltage power supply. The focus control is simply a variable resistance shunted across the focus coil, regulating the current through this coil. A rather elaborate bleeder is used in most receivers to supply voltages such as plus 215 v, 135 v, and 88 v, as well as minus 60 v and 120 v.

Bias Voltages. – The negative voltages are obtained simply by grounding the bleeder near its center rather than at one end. This method of obtaining a negative voltage to ground has been explained in earlier lessons. The negative voltages are used directly in some circuits, and supply bias for some tubes by means of further voltage dividing networks. A simple example of this is the method of obtaining a fixed bias for the grid of the sync amplifier stage. A diagram of this is shown here:

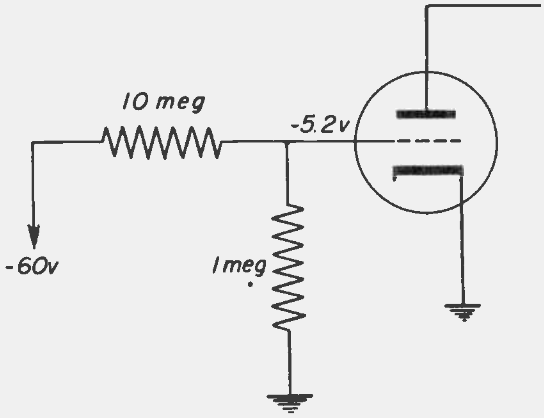

Fig. 27-21

In this circuit we have a voltage divider with a total resistance of 11 megohms. The grid is tapped at 1 megohm, meaning that 1/11th of 60 volts or about minus 5.9 v is the bias for this stage. Similar schemes are used to provide different biases for other tubes.

High Voltage Supply. – The high-voltage power supply is rather unique in that it utilizes energy normally lost in the receiver to furnish the kinescope high voltage. This power supply is known commonly as the "kick-back" or "fly-back" type. The names originate from the fact that the power supply energy is derived during the time that the scanning electron beam retraces from right to left. As will be described in more detail in a later lesson, a positive pulse of high voltage is formed in the horizontal output transformer each time the beam retraces. This means the 15,750 pulses are produced each second. These are fed into the plate of a high voltage rectifier, and filament power for the tube is also obtained from a winding on the horizontal output transformer. The rectified high voltage is passed through a very simple R-C filter and then is applied to the kinescope anode. Very little filtering is required, due to the high ripply frequency and the very low drain on the supply. This type of power supply has the advantage that it can supply very little current and is therefore safer than the conventional type. However, don't try to make comparisons with your finger tips. It could be unhealthy.

RECEIVER CONTROLS

4-12. Throughout this lesson we have mentioned various controls. Because it might be a little hard for you to keep all of these straight, a table has been prepared, based on a common type of receiver, showing all the controls, and their function. This table follows:

RECEIVER CONTROLS

Name of Control	Circuit	Function
Fine Tuning	Oscillator Plate Circuit	Fine adjustment of oscillator frequency.
Sound Volume	Grid of 1st Audio Amp.	To regulate volume of sound
Picture Contrast	Cathode of 2nd Video Amp.	To regulate relative values of black and white in picture
AGC Threshold	Grid of AGC Amp.	To set operating range of AGC properly for strong and weak signals
Vertical Hold	Grid of Vertical Sweep Oscillator	To set frequency of vertical oscillator so it will synchronize with vertical sync pulses
Height	Vertical Sawtooth Condenser Circuit	To adjust vertical size of picture on kinescope
Vertical Linearity	Cathode of Vertical Sweep Output Tube	To provide linearity of kinescope picture in vertical direction
Horizontal Locking Range	Grid of Horizontal Sweep Oscillator Control Tube	Set frequency range in which horizontal AFC circuit will operate correctly
Horizontal Hold	Plate of Horizontal Sweep Oscillator Control Tube	Fine control of horizontal sweep frequency to permit locking in of horizontal AFC
Horizontal Drive	Grid of Horizontal Sweep Output Tube	Adjusts amplitude of grid signal. Affects width and linearity of picture.
Horizontal Linearity	Plate Circuit of Horizontal Sweep Output Tube	Adjusts linearity of picture in horizontal direction
Width	Secondary of Horizontal Output Transformer	Adjusts size of picture in horizontal direction.
Focus	Across the focus Coil	Focuses picture

◆

NOTES

NOTES

TELEVISION SERVICING COURSE

PREPARED BY

RCA INSTITUTES, INC.
A SERVICE OF RADIO CORPORATION OF AMERICA

HOME STUDY DEPARTMENT
350 West 4th St., New York 14, N. Y.

LESSON TWENTY EIGHT

THE CHASSIS AND ITS COMPONENTS

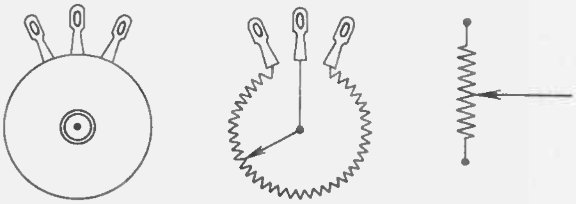

Lesson 28

INTRODUCTION

Lesson 17, 18, 19, 20 and 26 explained a good deal about such components as resistors, capacitors, coils, and vacuum tubes, in discussing fundamental d-c and a-c electrical theory. Now it's time to consider standard manufactured components like these, how their electrical and physical properties relate, and how they operate together in a television set. Just as important, we need to know how and why various components fail in service, and how to detect which one has failed.

It is assumed that a lot of the information in the lessons mentioned has stuck with you, because it will be very useful to you in absorbing the material in this lesson. If you find that some of it *didn't* stick, it will help to go back and review the material in these earlier lessons that applies to the section you're studying.

THE CHASSIS

28-1. The chassis is the metal base on which the tubes and other components are mounted mechanically. It also serves certain electrical purposes that should not be forgotten, as they can affect servicing problems in many cases. There may be several chassis in a single elaborate combination set. There may also be a separate, removable sub-chassis attached as a part of the main chassis, such as the r-f unit in most receivers.

A standard television receiver chassis is the structural framework on which the various components of the electrical circuit are mounted. It holds the whole works together in the desired physical relationship, so that the circuit will continue to operate electrically as it was designed to do. In addition, the chassis usually serves as a common electrical "ground" connecttion for various parts of the receiver circuit. This point is easy to forget, but, an incorrect application can cause a lot of trouble in high frequency circuits.

The design of receivers changes somewhat from model to model, but whatever the changes, there still has to be a chassis to support the parts. Also, circuit changes are often only a matter of altering the values of a few components, or changing a tube type. This frequently makes it possible to use the same chassis design for several successive models of a particular set.

Classes of Components. – The principal kinds of components in television sets are, as in other radio-electronic apparatus, vacuum tubes, resistors, capacitors (condensers), and inductors (coils, chokes, transformers). Each of these is made in a number of different types, some adapted to a large variety of circuit uses, some designed to do one job particularly well. Many of the components used in television sets are just the same as those used in ordinary radios; others are made with special performance characteristics to suit television circuit requirements. As with almost everything else in the electronic field there has been and continues to be considerable progress in the design and manufacture of components of all sorts. This often makes better circuit performance possible, but also may add to the technician's difficulties in recognizing the class and electrical value of a component at sight. Capacitors that look like resistors, even to the color banding, are only one recent example of this sort of thing.

Layout of Components. – In general, the television receiver chassis has to be a compromise that will fulfill certain mechanical and electrical requirements, yet be economical to make and fairly easy to service. It will simplify discussion if we select one particular chassis, say the RCA 9T240, as an example to illustrate the layout of receiver sections and parts. Fig. 28-1 shows both top and bottom views of this chassis.

CHASSIS TOP VIEW

9T240, 9TC240

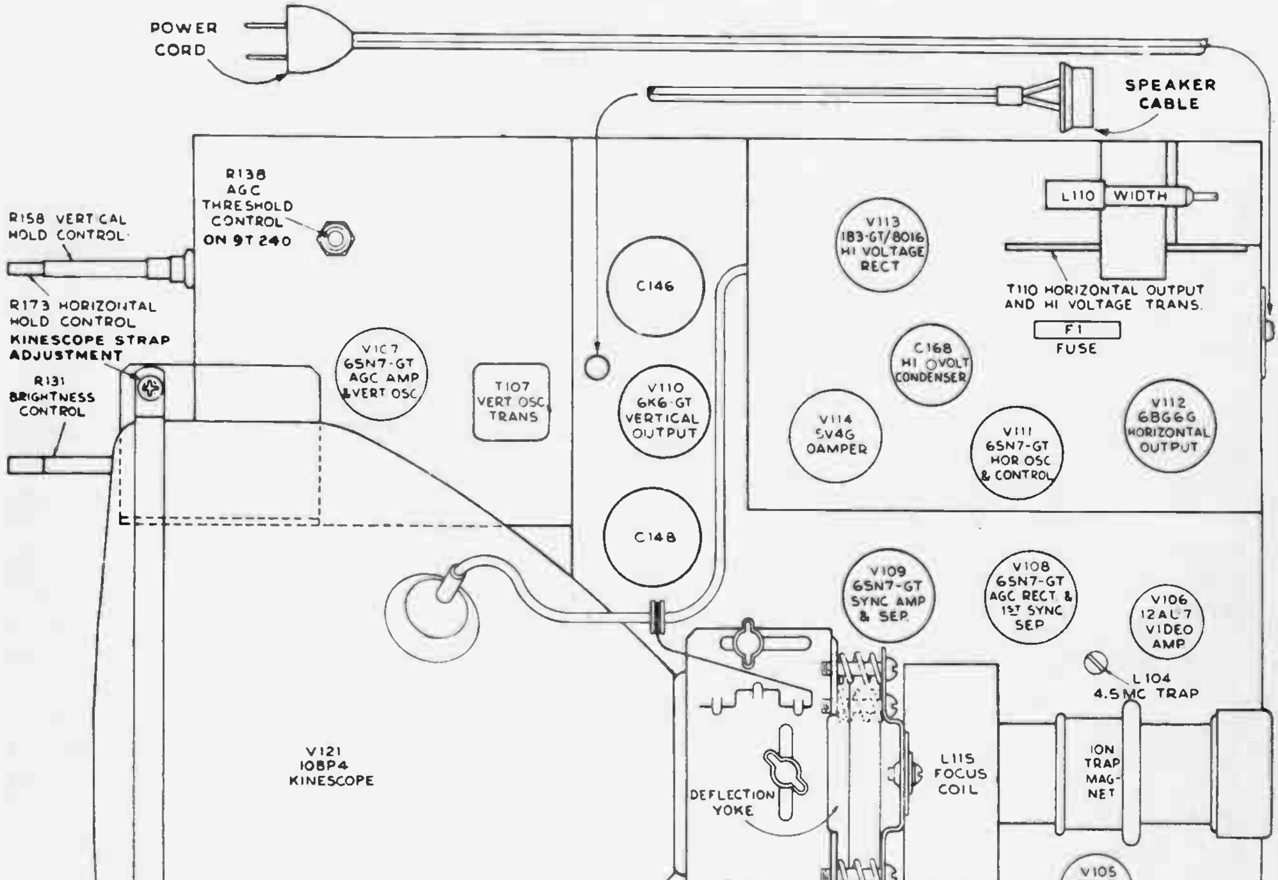

Fig. 28-1 (a)

CHASSIS BOTTOM VIEW

9T240, 9TC240

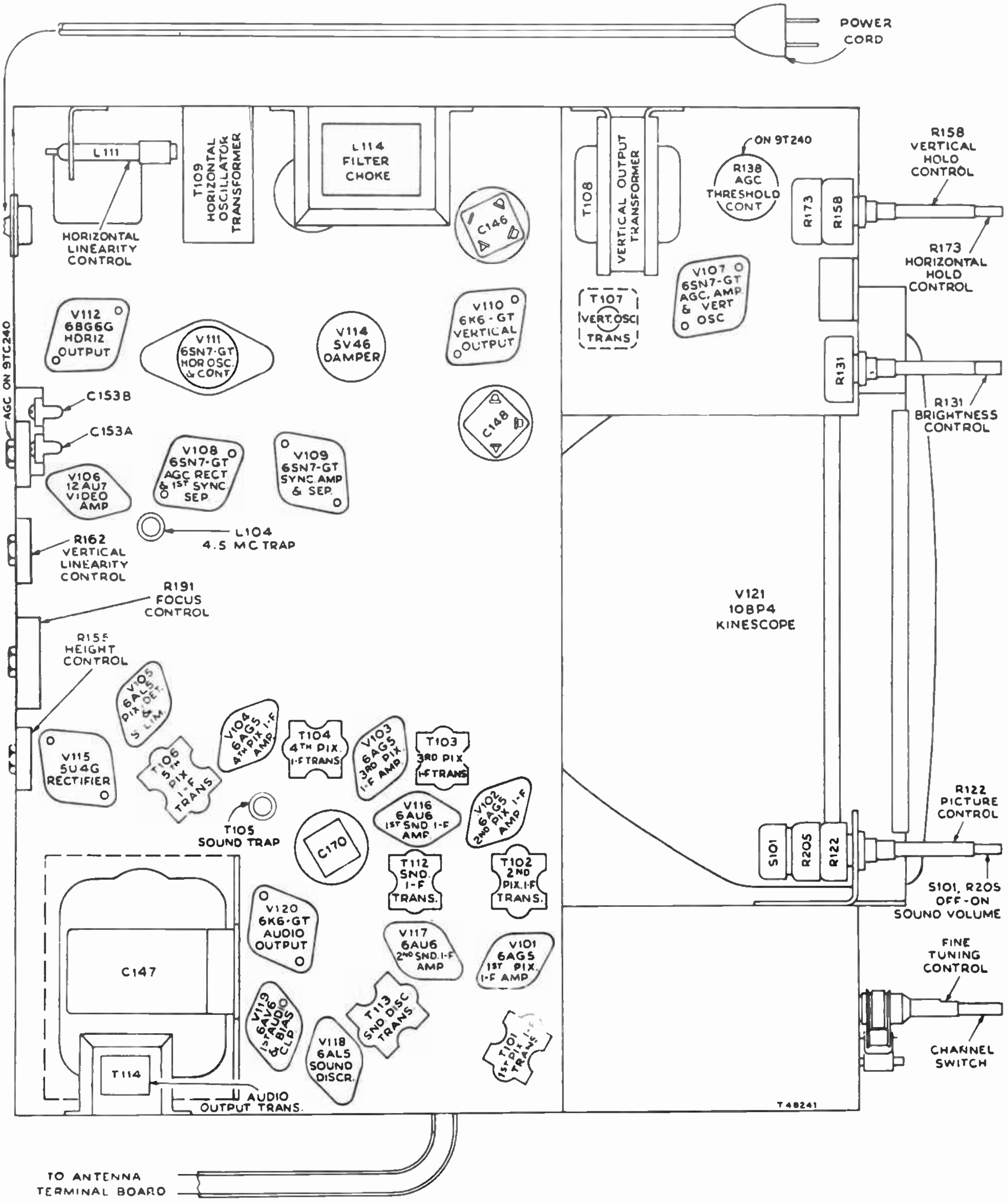

Fig. 28-1 (b)

The general layout is apparent from the figure. In this chassis, the kinescope is secured to the chassis by a strap at the rim, and by the deflection yoke at the juncture of the neck and bulb. This permits putting the chassis and kine together into almost any position convenient for service work. However, in some sets, the size of the kinescope or other considerations make it impractical to mount the kine on the chassis in this way.

The layout of the various stages of the receiver circuit is arranged to bring the shafts of the operating controls out the front of the set, for obvious reasons. Also, the sections are laid out so that the signal follows a progressive path, without much doubling back, which could lead to feedback and oscillation troubles. The signal enters the r-f unit, which is constructed on a small subchassis for convenience in manufacturing and servicing. This r-f unit subchassis is mechanically attached to the corner of the main chassis at the right of the kinescope, and the signal upon leaving it passes directly into the picture and sound i-f amplifiers. These sections are located on the main chassis near the r-f unit, so that leads can be kept short and direct, which is very important in high frequency circuits. The result of this arrangement is that just about all the stages of the receiver carrying really high frequency signals are grouped compactly on the right side of the chassis.

Correspondingly, the synchronizing and deflecting circuits, and the high voltage power supply are all located on the left side of the chassis, in such a way that the leads between stages and sections can also be kept fairly short and direct. This general layout scheme of separating the signal selecting and amplifying circuits from the sync and deflection circuits is followed in almost all television receivers. This aids in preventing harmonics of the deflection signals from getting into the signal circuits. Also, the progressive routing of the r-f and i-f signal path makes it possible to keep leads between stages and sections short and direct, and also to keep the output of a given stage or section fairly well isolated from the input, to prevent unwanted feedback.

Another common practice in layout is keeping the power transfer well separated from the kinescope and the high voltage circuit. If this is not done, the external 60-cycle magnetic field from the power transformer may affect the picture by acting directly on the electron beam in the kinescope.

The top view of the chassis shows the larger components, such as transformers, tubes, and the larger capacitors. Almost all the circuit wiring is kept below the chassis for a number of reasons, such as mechanical protection, short leads, and ease of servicing. The specific layout of the major components can readily be seen in Fig. 28-2.

The general layout of the smaller components can be seen in Fig. 28-1*b*, which shows the under side of the chassis, while details of the wiring show up better in Fig. 28-3.

The wiring under the chassis follows a definite color coding, which unfortunately cannot be seen very well in a black-and-white illustration. This code is given in Table B on page 28-13. Many service instructions include a chassis wiring diagram of the sort shown in Fig. 28-4, which shows the color coding, and also the circuit connections.

The various layout and wiring illustrations already discussed, and the schematic diagram in Fig .28-14 make it possible to locate and identify any part or connection quickly, even in an unfamiliar set, and of course they are useful as refreshers to your memory after you've become familiar with a particular chassis.

Lead Dress. – In standard radio broadcast receivers the signal frequencies are rather low, and the physical layout of leads carrying signal frequencies is not often critical. This is unfortunately not true at the signal frequencies involved in television receivers. In such sets, the physical layout of connecting leads carrying signals is likely to be very important. Altering the dress of leads (moving them from the factory-set position) may seriously affect

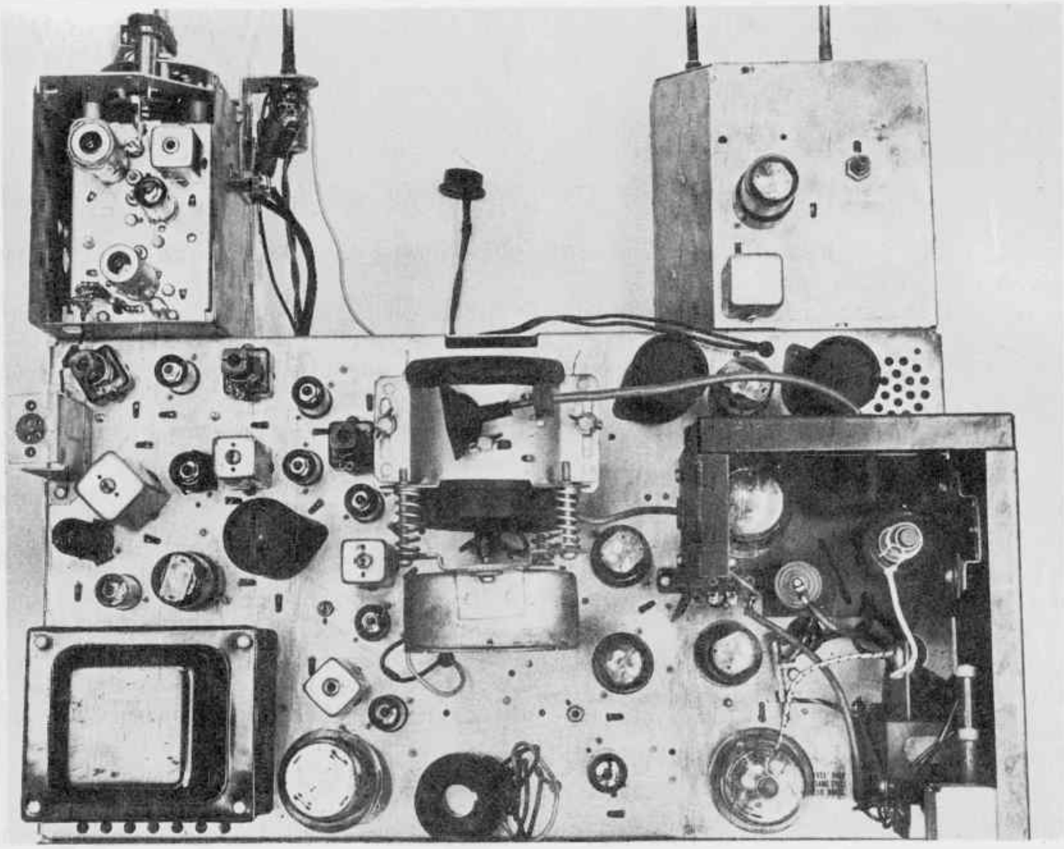

Fig. 28-2

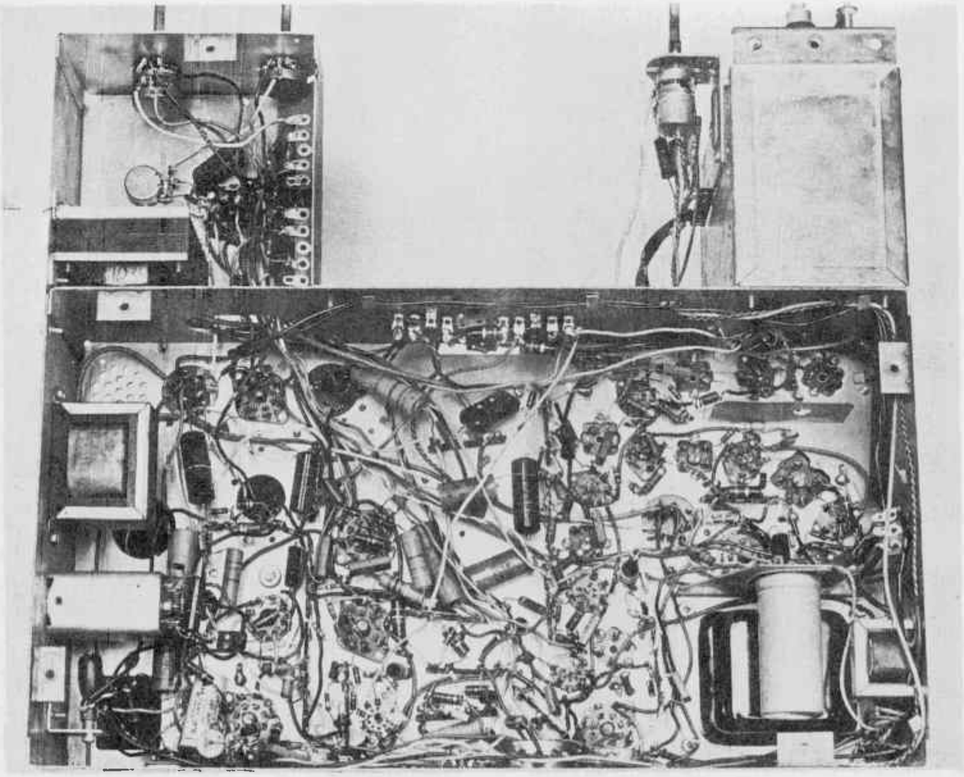

Fig. 28-3

CHASSIS WIRING DIAGRAM

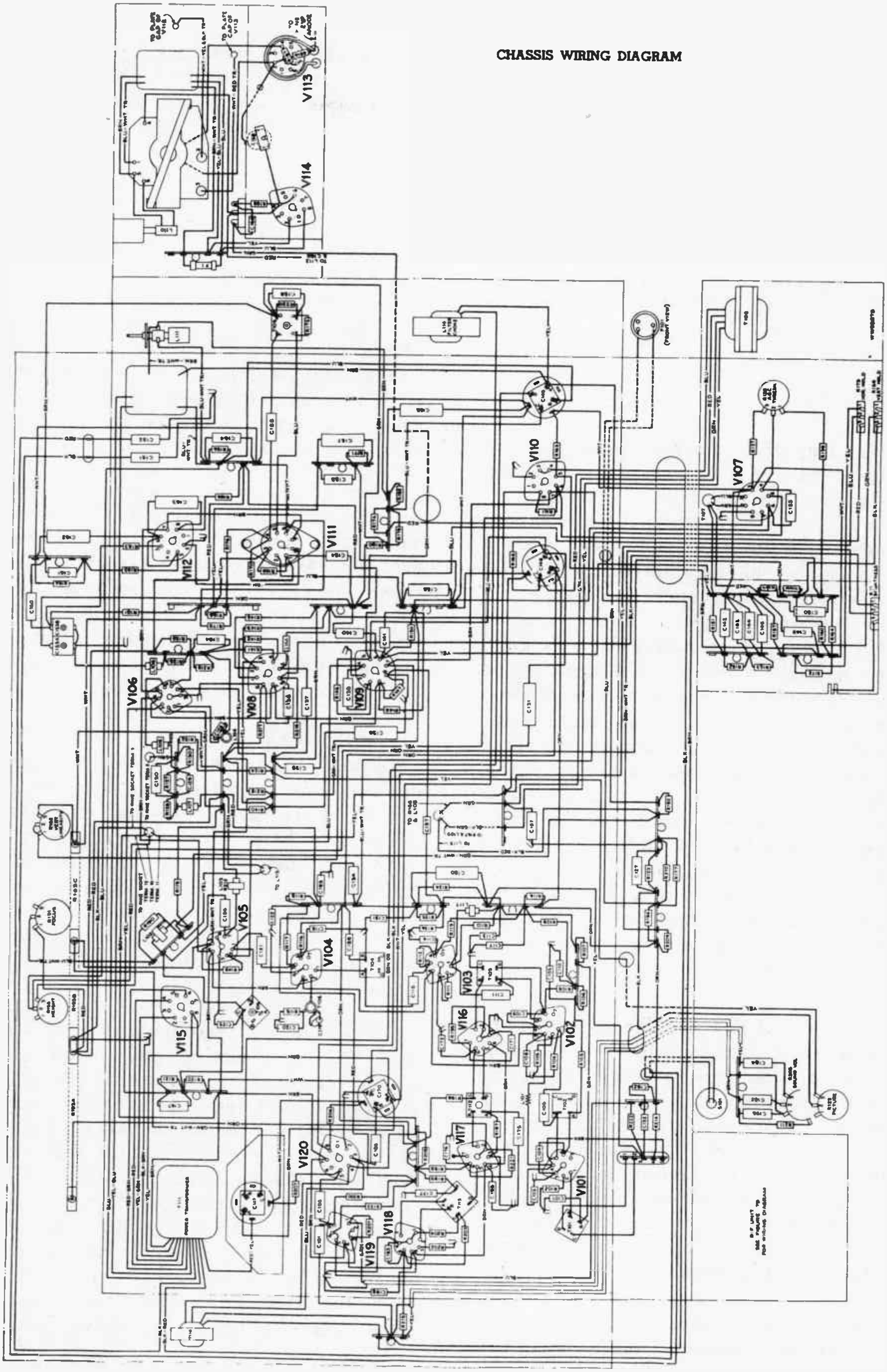

Fig. 28-4

the operation of the set. In particular, moving leads closer together or farther apart, or toward or away from the chassis, is likely to change the gain or frequency response of a stage or section. This is especially important to remember when replacing a component, for then leads have to be unsoldered, and it is easy to accidentally replace it in a new physical position. Reference to the data on lead dress in the service data will help to avoid trouble from this source.

VACUUM TUBES

28-2. One of the most important classes of component in a television set is the vacuum tube. In each stage of the receiver, a tube is the hub, or center of importance, and most of the other components are simply used to aid the tube in doing its particular job. Unfortunately, tubes cannot yet be built economically to run for a hundred years without attention, like the wonderful one-hoss shay in the poem. They *do* have a reasonable service life, if not worked at the limit of their ratings or beyond, but still remain a common source of trouble The most important tube in the receiver, if any one can be called *most* important, is the kinescope. After all, the real thing the customer buys is mostly the pictures he sees on the kinescope screen, and most of the rest of the parts of a television receiver are included only to put the right electrical impulses into the kinescope to produce a picture.

Classes of Tubes. – The number of different types of vacuum tubes used in television receivers alone is rather large, and as the art progresses, new types are being developed. For this and other reasons it is desirable to think of tubes in classes, basing our classification on some logical characteristics of the tubes themselves. We can, for instance, divide them according to the number of elements (electrodes) that have a direct part in their action. Thus we have diodes (two elements), triodes, (three elements), tetrodes (four elements) and pentodes (five elements), as well as some special purpose tubes that have more than five elements. This is helpful, but does not tell the whole story by a long shot, for there are wide differences in the performance of tubes within each of these groups. One of the most important differences between different tube types within the same class is their capacity for handling power. For instance, there are triodes that would be overloaded by a three-volt signal applied to the grid, and other triodes that do not overload with a 45-volt signal on the grid. It is very useful to keep both these ways of classifying tubes in mind as a sort of mental cross-reference system. In fact, a little space devoted here to just how tubes differ in their power-handling capacity may help to avoid confusion later on.

One of the most common uses for a vacuum tube is to amplify a relatively weak alternating voltage applied to its grid, so that an exactly similar but many times larger voltage can be taken out of its plate circuit. This function is called voltage amplification, and a good many of the tubes in a television set are used solely for this purpose. As an example, the r-f amplifier tube is used to amplify the very weak r-f voltage induced in the antenna by the radio wave from the desired station. The output voltage from the plate circuit of the tube is several times larger (from 5 to 20 or more, depending on tube type and circuit design) than the signal applied to the grid, but is exactly the same otherwise. The actual voltage of the desired signal applied to the grid may be no more than a hundred *millionths* of a volt or so in weak signal areas.

Even in the strongest signal areas, near the transmitting antenna in large cities, the actual voltage of the signal reaching the r-f amplifier tube grid may be no more than a quarter or half a volt. *Yet, this may be enough to overload the tube.* And when this happens, the tube no longer operates like a linear amplifier as we want it to, but begins to behave like a rectifier. This is the reason it is sometimes necessary to use a network of resistors to reduce the signal voltages at the input of the receiver in some strong signal locations.

Efforts have been made to reduce the the number of tubes you have to deal with to a minimum number of preferred types. A list of preferred tube types can be obtained from your supplier; such a list is useful in planning your stock of spares.

The Kinescope. – The tube designation, 10BP4–A, gives some specific information about the tube. We know that it is a kinescope because of the letter *P* in the tube designation. The first number, *10*, indicates that the tube face is approximately 10 inches in diameter; while the last number, *4*, or we should say *P4*, indicates the type of fluorescent screen. *P4* designates a "white fluorescent screen having a medium persistence and high efficiency", which is the normal type for use in television receivers to give a black and white picture. Other types of screens are used for cathode ray tubes in oscilloscopes, radar, and other special uses. The letter *B* shows that the 10BP4-A was the second ten-inch tube with a P4 screen to be developed. The *A* indicates an improvement in design which does not prevent it from being substituted for the original 10BP4.

Figure 28-5 shows the arrangement and numbers of the pins of the 10BP4-A kinescope with their connections to the internal elements.

Fig. 28-5

Safety in Handling the Kinescope. – By this time you have learned to handle the kinescope with respect. But it takes only one slip to have an accident. Remember that the weakest part of the kinescope is the rim of the viewing surface. It must not be struck, scratched or subjected to more than moderate pressure at any time. In installation, if the tube sticks or fails to slip smoothly into the deflecting yoke, focus coil or socket, better check the cause of the trouble. *Never force the tube.*

In handling the kinescope keep in mind the danger of high voltage. When the power is on, it is possible that high voltages may appear at normally low-voltage points in the circuit due to capacitor breakdown or to incorrect circuit connections. Before touching any part of the circuit, be sure to turn off the power switch and to ground the terminals of any charged capacitor. Remember, too, that the conductive outer coating on the glass kinescope together with the Aquadag coating on the inner surface constitutes a condenser. This could hold a charge for some time, so be sure to discharge it by shorting the high-voltage terminal of the kinescope to the outer coating before handling a kinescope that that has been in use.

Types of Tubes. – Now let's consider the twelve types of tubes used in the 9T240 chassis. The charts showing the schematic of the elements and their connection to the pins are given in any receiving tube manual.

The numbers and letters designating the tube give some information about the particular tube. The G or GT tacked on to the tube designation indicates a glass tube, G for the sloping-side bulb type and GT for the tubular glass type. These glass type designations are added to distinguish the tubes from similar tubes with metal envelopes, both using the octal (8 pin) base.

The first number of the tube designation indicates the approximate filament voltage. The last number indicates the number of useful elements brought out to terminals. Originally, letters at the beginning of the alphabet were to indicate tubes used as amplifiers, oscillators or detectors; letters at the end of the alphabet were to indicate rectifiers. But so many types began to appear that there just weren't enough letters in the alphabet to prevent the two major classes overlapping.

Tube Base Pins. – The method of numbering the pins is indicated in the tube diagrams shown a little later in Fig. 28-6. The diagrams represent the *bottom* of the tube base. Starting at a definite keying point (the key of an octal tube, the wider space between pins in miniature tubes, etc.) the pins are numbered *clockwise*. From the top of the chassis, looking down on the socket, the pin positions are determined by numbering counterclockwise.

In some tube bases there are pins that are not connected to any internal element. . In others, pins not needed are omitted from the tube base. In that case, the pins are numbered in accordance with their positions as if all the pins had been included.

Typical Tubes for TV Receiver Sections. Table A lists the various tubes used in the 9T240 receiver and their functions. Notice that some tubes are used to perform different functions, while others have a particular or special use. The twelve types of tubes are used as follows:

TABLE A

Quantity Used	Tube	Functions
6	6AG5	R-f amplifier; converter; 1st, 2nd, 3rd, and 4th picture i-f amplifier.
1	6J6	R-f oscillator.
2	6AU6	1st and 2nd sound i-f amplifier.
2	6AL5	Sound discriminator; picture second detector and sync limiter.
1	6AV6	1st audio amplifier and bias clamp.
2	6K6–GT	Audio output; vertical sweep output.
1	12AU7	1st and 2nd video amplifier.
4	6SN7-GT	AGC amplifier and vertical sweep oscillator; AGC rectifier and 1st sync separator; sync amplifier and second sync separator; horizontal sweep oscillator and control.
1	6BG6–G	Horizontal sweep output.
1	5V4–G	Damper.
1	1B3–GT	High Voltage rectifier.
1	5U4–G	Power supply rectifier.

One feature of the 6AG5 which makes it particularly adapted for use in r-f amplifier, converter and picture i-f amplifier circuits is the fact that it has two cathode leads - pins 2 and 7. This makes it possible to isolate the input and output circuits, thus helping to minimize interaction between those circuits. The tube is a sharp-cutoff pentode. In later receivers the 6AG5 has been replaced in the first and third i-f stages by the 6BA6, which is a remote-cutoff pentode. A remote-cutoff pentode permits a greater bias voltage to be applied to the control grid. This is desirable to allow a greater range of AGC bias voltage in the i-f stages. Increased receiver sensitivity has made this change particularly desirable to prevent overloading in strong signal areas.

While the 6AG5 and the 6BA6 are similar in many respects, don't make the mistake of substituting one for the other. There are two important differences in the pin connections, as shown in Fig. 28-6. In the 6BA6 the cathode is connected only to pin 7, while the suppressor grid, G3, is not connected internally to the cathode but is brought out to pin 2. Besides the difference in pin connections, there is a difference in characteristics which makes the two types non-interchangeable.

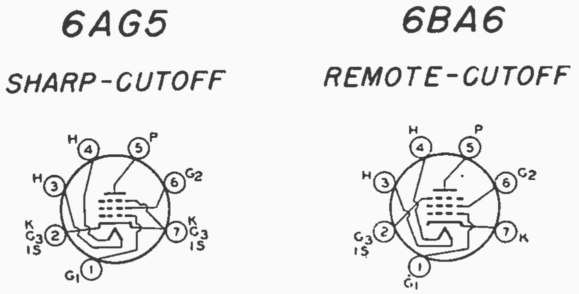

Fig. 28-6

The medium-mu twin triode, 6J6, is particularly suited for use in a push-pull oscillator circuit. It is used as the r-f oscillator or the oscillator-mixer in many different models of television receivers.

The sharp-cutoff pentode, 6AU6, used in the sound i-f stages, not only is a good high frequency amplifier tube, but also serves well as a limiter in FM circuits. This tube is used as an i-f amplifier, and also, because of its sharp-cutoff characteristics and comparatively low interelectrode capacity, it is sometimes used as a video amplifier.

To perform the function of the sound discriminator, a duo-diode type tube is needed. The 6AL5 serves this purpose. Since each diode can be used independently of the other, this tube can also perform the double function of picture second detector and sync limiter.

A power output tube is necessary for such stages as audio output, vertical sweep output and horizontal sweep output. The 6K6-GT, which is capable of delivering moderate power output with relatively small input voltage, is used in the audio output and vertical sweep output of a great many TV receivers. In the horizontal sweep output stage, however, where high surge voltages occur during short duty cycles, a special tube particularly designed for that purpose is used. In most current receivers this is the 6BG6-G.

The multiple-unit tubes, 12AU7 and 6SN7, medium-mu triodes, save space and simplify circuit connections by providing two tube units in a single envelope. These tubes are similar in characteristics except for their inter electrode capacitances and the heater of the 12AU7 which can be connected for 12.6 volts or 6.3 volts. The 12AU7, a 9 pin miniature tube, is used in the video amplifier stages where low interelectrode capacitance is an important factor. The 6SN7-GT is an octal tube used in many stages of the sync and sweep circuits, both vertical and horizontal.

The full-wave rectifier, 5V4-G, used as the damper tube in the horizontal sweep output of our specimen receiver, has been replaced in later receivers with the 6W4-GT especially designed for this purpose.

High voltage for the kinescope second anode is obtained by rectifying the high voltage pulses produced in the output of the horizontal sweep system. The 1B3-GT performs this function particularly well. *The high voltages at which the 1B3-GT is operated are very dangerous.* The filament circuit operates at d-c potentials that can cause fatal shock. Extreme care is necessary to be sure not to come in contact with these high voltages.

Power supply voltage rectification is commonly provided by the 5U4-G octal type tube. Where only moderate d-c requirements are called for, the 5X3-GT tube, or sometimes a selenium rectifier is used in the low-voltage power supply. Don't touch the power rectifier when it is hot. *All power handling tubes must be adequately ventilated.*

Typical Tube Troubles. – A large percentage of television service calls are the result of tube troubles. This is to be expected because tubes are subject to filament burnout, aging with resultant change of characteristics, contact corrosion, and other troubles. A prompt check of suspected tubes simplifies many service calls, since once the defective tube is located it can be easily replaced.

Although burning out of the tube filament or heater is the most common tube trouble that is not the only thing that can go wrong with the tube. Continuity of the heater element can often be checked with an ohmmeter; but be sure to first look up the pin connections for the particular tube, if the tube happens to be of a type with which you are not familiar. For other tube troubles, such as a "weak" tube (low emission), shorted or open elements, etc., a tube checker is useful. But, even when a tube tests correctly in a tube checker it may still not work right in the receiver. Substituting a good tube of the proper type in place of the suspected one usually saves time.

In many circuits the characteristics of the tube are a critical factor in the circuit operation. The tube might have aged just a little or some circuit change might make just enough difference for the circuit to operate improperly. In such a case, substituting another tube of the same type may clear up the trouble. Such problems sometimes crop up in the first and third picture i-f amplifiers with the sharp-cutoff pentode 6AG5, and with the 6BG6-G horizontal sweep output tube, whose characteristics are quite critical for the proper operation of the stage.

The operation of certain stages may be so critical, that shields are required around those tubes. This is particularly true of the oscillator tube to prevent radiation of the local oscillator signal. To a much lesser degree failure to replace the shield may cause trouble in the r-f amplifier, second sound i-f amplifier, and sound discriminator stages. Make sure that these shields are in place and properly grounded to the chassis. Failure to do so may cause unstable or noisy operation.

When a tube fails, the trouble may show up as an inability to conduct current, excessive current drain, noisy or intermittent operation, or a blue or reddish-blue glow, chiefly between the cathode and the plate, indicating gas or air in the tube. (In rare cases, the glass itself may have a bluish or greenish glow; this is quite all right.) Tube difficulties were covered in more detail in Lesson 26.

Of course, the tube pins must make good contact with the socket prongs. Whenever the receiver operation becomes noisy or intermittent, poor tube contact may be suspected. Cleaning the prongs and pins and making sure there is sufficient tension in the socket prongs to insure good contact, frequently clears the trouble. There isn't much clearance between the contacts on the miniature tube sockets, so care is necessary not to short circuit any of them.

Last, but not least, *always make sure that the correct tube is in each socket and that all tubes are seated firmly in their sockets.*.

Interchangeability of Tubes. — In servicing a defective receiver and in checking tubes the technician must have with him a stock of replacement tubes. In general it is best to replace a tube with a good tube of the same type. However, there are a few tubes whose characteristics are so similar that they can be interchanged. This may be necessary in an emergency or for a temporary repair. But, in making such a substitution, extreme care is necessary to check not only the similarity of tube characteristics, but also the pin connections, to be sure that the tube can operate properly in the circuit. Substitutions which have worked out well in the field were tabulated in Lesson 26.

Tube Sockets and Wiring. — If the tubes are to operate properly the tube sockets must have such desirable electrical characteristics as low capacitance (particularly for the r-f unit), high leakage resistance, low contact resistance, high rated working voltage, and ability to withstand high humidity. The required mechanical characteristics are ease of inserting and removing tubes, mechanical strength, and ease of mounting and wiring.

In r-f and high impedance circuits where humidity can affect circuit operation, it is necessary to use materials such as a ceramic, low-loss bakelite, or polystyrene that will maintain low leakage losses under adverse conditions. Most of the sockets in the 9T240 receiver are made of low-loss bakelite. The sockets on the r-f sub-panel are of polystrene, as is that of the 12AU7 video amplifier. The 1B3GT high voltage rectifier uses a ceramic type socket. Several receiver chassis use a shock-mounted ceramic socket for the 6SN7GT horizontal oscillator tube.

Tube sockets cause very little service trouble. However, frequent tube insertion or wiggling of the tube in its socket can cause a loose contact, or, in rare cases, a short between contacts. Make sure that all tubes are in place and that they are firmly seated in their sockets.

The use of color coded wiring to connect to the tube contacts simplifies assembly wiring and inspection and makes your servicing job easier. We have already mentioned the standard wire color code, shown in Table B. For the proper identification of wiring that has two colors, it is best to check the chassis wiring diagram in your Service Data.

RESISTORS

28-3. In order for the tubes and other circuit elements to operate properly, the correct operating voltages must be supplied to the tube elements and other critical

TABLE B

Color Coding for Hook-up Wire

Color	Wiring Application
Black	Ground, grounded elements and returns
Brown	Heaters or filaments off ground
Red	Power supply, highest B plus
Orange	Next highest B plus, usually screen grid
Yellow	Cathodes
Green	Control grids
Blue	Plates
White	Above or below ground return (AGC,etc.)

Special Code for Electrolytic Capacitors having leads instead of terminals.

Orange	Highest voltage section
Red	Next highest voltage section
Blue	Next to lowest voltage section
Yellow	Lowest voltage section
Black	Common negative connection

points in the circuit. Resistors are used to distribute the power voltage, acting as voltage dividers, voltage dropping and bias resistors. In addition, resistors are used in filter circuits, timing circuits, and various control circuits to regulate voltage or current.

Types of Resistors. – Resistors may be either fixed or variable. They may be wire wound or the composition carbon-resin type. The principal uses of wire wound resistors are as voltage dividers, voltage dropping resistors, and bias or filter applications, where precision values are needed or the power requirements are greater than 2 watts. Composition carbon-resin type resistors are generally used for practically all low-power applications. Variable resistors may be either of a composition or wire-wound type, the wire-wound type being capable of handling more power. Examples of various types of resistors are shown in Fig. 28-7.

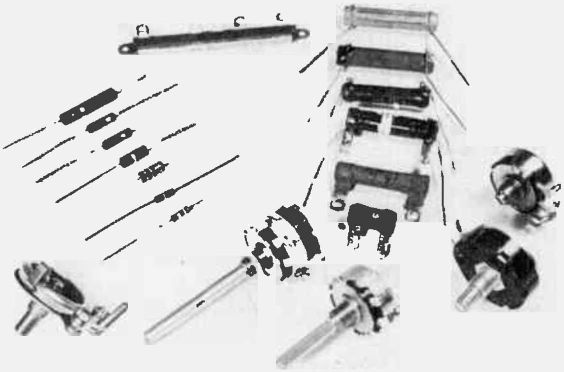

Fig. 28-7

In order to give as much information as possible in the wiring and schematic diagrams, numbers and brief notes are attached to the symbols. A numbering system, adapted for the radio and television industry from military practice, is widely used. Where a number of resistors are mounted as parts of a single unit, the separate parts are identified by the letters A, B, and C, as for example, the voltage divider R193A, R193B and R193C. Where it is possible to do so, the values of the parts are shown. This is usually done on the schematic diagram. For example, the numbers 850, 650 and 650 on the symbol for the voltage divider show the resistance values in ohms of the various sections; the designation 2.2 *meg.* for the composition carbon type resistor R130 indicates the value in megohms. On a unit such as the Brightness Control, terminals are identified by number, when there are more than two, or where it is necessary to distinguish between terminals. Where the control is variable, an arrow is frequently included to show the direction of rotation of the movable arm for a variable resistor, this is the direction in which the resistance is increased.

These designations not only enable you to find quickly a particular part in a circuit, but give the essential information needed for selecting the correct replacement.

Fixed Resistors - Wire Wound. – Since the high frequency characteristics of wire-wound resistors are relatively poor because of skin effect, residual inductance, and capacitance, such resistors are used in television receivers only in circuits where high frequency requirements are not a factor. ("Skin effect" produces an apparent rise in resistance as the frequency goes up.) A check through the parts list for the 9T240 receiver shows only four wire-wound resistors. These are:

Schematic Part No.	Description
R187	Resistor – Wire-wound, 3.3 ohms, 1/3 watt
R202	Resistor – Wire-wound, 5.1 ohms, ½ watt
R190	Resistor – Wire-wound, 390 ohms, 2 watts
R193A R193B R193C	Voltage divider, comprising 1 section of 850 ohms, 12 watts; and 2 sections of 650 ohms, 6 watts, each

Inspection of the 9T240 circuit diagram shows that R187 and R202 are used as filament voltage dropping resistors, while R190 is used in the current-regulating Focus Control circuit. Obviously, we are not concerned about high frequencies in these circuits. We are concerned, however, with fairly precise resistance values or with high power capabilities (wattage), both important properties of wire-wound resistors.

Wire-wound resistors are particularly of value where high power must be handled. This is the case in the voltage divider R193A, B and C, where one section is designed to dissipate 12 watts and the other two sections 6 watts each without overheating. The heating effect is proportional to the power given by the formula, $P = I^2R$. Therefore a resistor carrying high current may become quite hot unless some means is provided to remove the heat developed during operation. This heat is dissipated by radiation from the surface of the resistor unit. For two units having the same resistance value, the one which is larger in physical size will dissipate or radiate the greater amount of heat so that its operating temperature will remain at a lower value. The larger size resistor, therefore could handle safely higher currents and would have a higher wattage rating. Wire-wound resistors can be operated hotter without permanent or temporary damage, and therefore, do not need to be as large as an equivalent carbon resistor. In addition to the physical size of the resistor, ventilation is important in preventing overheating. Parts that are required to dissipate high power must be mounted on the chassis in positions where they are most easily cooled by the air and where they do not heat other components.

Fixed Resistors - Composition Type. – Composition resistors consist of finely divided carbon material mixed with a suitable resinous binder, combined in proportions designed to give the resistance value desired. The resistance element is enclosed in a molded case for mechanical strength and to protect it from humidity or moisture. Composition type resistors are subject to some changes in their resistance value due to high temperatures and excessive humidity. For this reason their resistance tolerances are much greater than for wire-wound resistors. Composition type resistors are used for general purposes, including high-frequency circuits, in resistance values ranging from 10 ohms to 10 megohms.

Resistor Failures. – The previous lesson mentioned the manner in which resistors fail, the general rule for the more common composition resistors being that the resistance may increase with time and use, but rarely decrease. The change may be gradual, due to aging, or it may result from overheating or actual burnout. Depending on conditions, a resistor will give evidence of overheating by symptoms ranging from slightly blistered paint to blackening and bursting of the resistor.

Since resistor overheating is the result of too much current, merely replacing the damaged resistor may not correct the trouble. It is important to check the circuit to find out why the resistor failed, usually the result of some shorted component.

Another trouble is noise, which can develop in fixed resistors. This may be the result of the wire lead becoming loosened from the resistor element, or it can develop after overheating or aging when microscopic cracks form in the resistor element, causing intermittent internal contact. Care is necessary in soldering resistors; if too much heat is applied to the resistor lead in the soldering process, the resistance element may be overheated to the point where it may permanently change in value or become noisy.

CONTROLS

28-4. Classification. – Most controls in radio or television receivers are variable resistors. These are resistors with fixed contacts at the ends of the resistor element and a variable contact by means of which the resistance value is adjusted. The resistor element may be either carbon-composition or wire-wound type. Frequently, two controls are mounted together. In this case, the shaft which turns the variable arm of one control fits inside of a hollow shaft which turns the variable arm of the other control. Or, if the two must turn simultaneously, a single solid shaft drives both. In replacing a control it is important to note the length of the shaft. Because of variations in cabinet and chassis in different receiver models, some controls are provided with long shafts and others with short shafts. The proper length shaft, as well as the correct resistance value for the control, must be used. A discussion of controls and their troubles was given in Lesson 26.

Properties of Variable Resistors. – In general, carbon-composition type variable resistors are used for high resistance and low power requirements, while wire-wound resistors are used where the power requirements are relatively high. For practical reasons the composition type variable resistors are generally limited in resistance to a maximum value of five megohms, while the wire-wound type is limited to a maximum value of about 10,000 ohms.

Variable resistors are used for such purposes as brightness, contrast, volume and tone controls. Seven variable resistor controls are used in our typical receiver the model 9T240. They are listed in Table C.

Table C

Variable Resistance Controls

Schematic Part No.	Description	Value
R131	Brightness control	50K
R138	AGC threshold control	200K
R191	Focus control	5,000
R155	Height control	2.5 meg.
R162	Vertical linearity control	5,000 ohms
R158	Vertical hold control	1 meg.
R173	Horizontal hold control	50K
R122	Picture contrast control	10K
R205	Sound volume control	1 meg.
S101	Power switch	

CONDENSERS OR CAPACITORS

28-5. – "Condenser" and "capacitor" are two names for the same thing in electronic applications; but, since the term "condenser" has different meanings in other industrial fields, for example as one of the parts of a steam power system, capacitor is the preferred term to use in the electronic field to define a device used to store an electrical charge. Both names are used in this course, without any shade of difference in meaning.

Capacitors may be fixed, adjustable, or electrolytic. There are many different types and sizes in each of these classifications. Examples of different types of capacitors and their symbols as used in the 9T240 receiver are shown in Fig. 28-8.

Fixed Capacitors. – Present day receivers use three different types of fixed capacitors: Mica, ceramic and molded paper. These, together with the color codes used to identify their capacitance and other desired characteristics were shown in the previous lesson.

Mica dielectric capacitors come in two types: those with metal foil conducting plates separated by thin strips of mica and those with a metal film coated on the mica strips. Mica is a natural dielectric material, relatively free of impurities, which can be readily separated into very thin sheets. This property is important since capacitance depends upon the area of the metallic plates, nature or dielectric constant of the insulating material (mica) and its thickness. After metal-coating thin mica strips, the strips can be placed together to form a unit small in size (not much bigger than a postage stamp and 1/8 inch thick) and with very high resistance

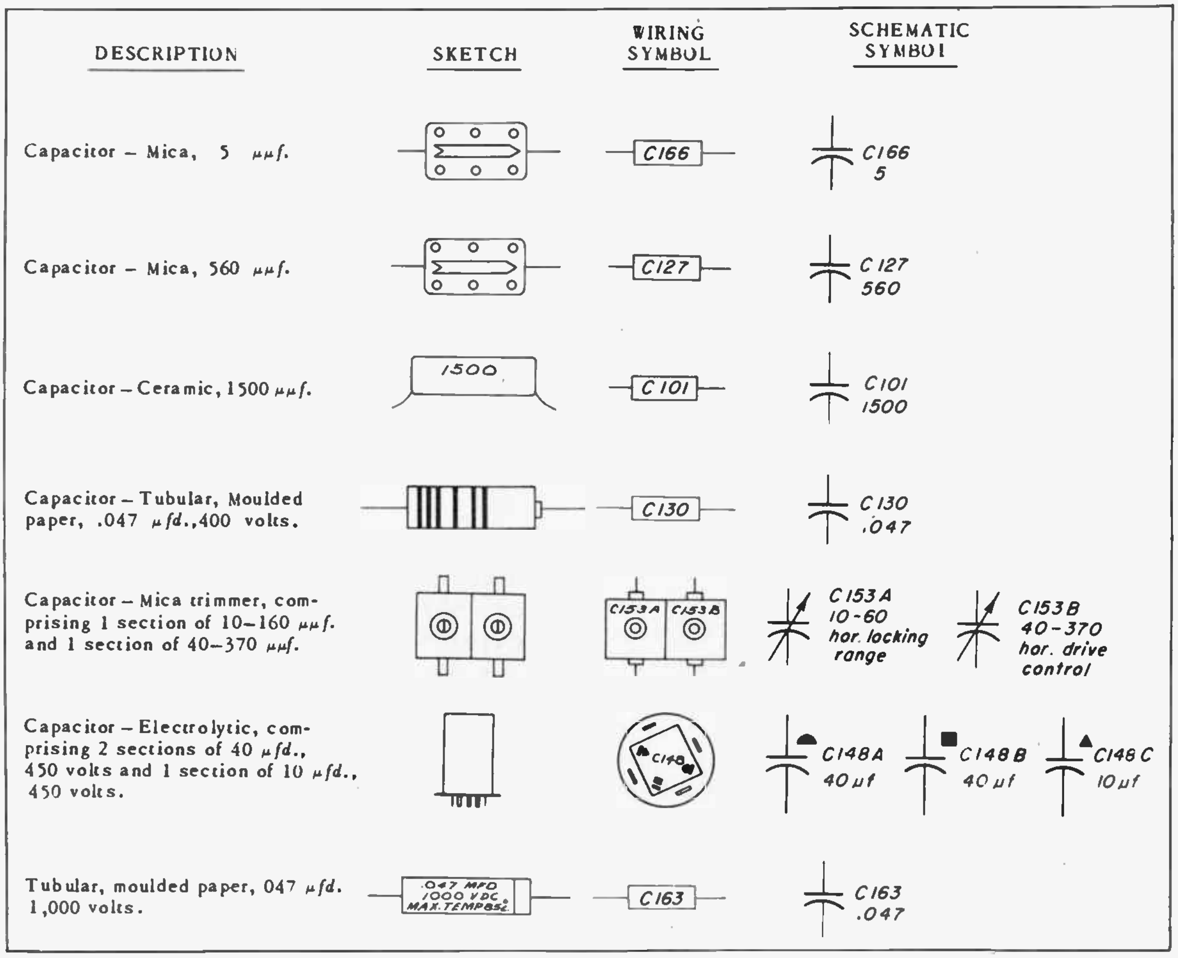

DESCRIPTION	SKETCH	WIRING SYMBOL	SCHEMATIC SYMBOL
Capacitor – Mica, 5 μμf.		C166	C166 5
Capacitor – Mica, 560 μμf.		C127	C127 560
Capacitor – Ceramic, 1500 μμf.	1500	C101	C101 1500
Capacitor – Tubular, Moulded paper, .047 μfd., 400 volts.		C130	C130 .047
Capacitor – Mica trimmer, comprising 1 section of 10–160 μμf. and 1 section of 40–370 μμf.		C153A C153B	C153A 10-60 hor. locking range C153B 40-370 hor. drive control
Capacitor – Electrolytic, comprising 2 sections of 40 μfd., 450 volts and 1 section of 10 μfd., 450 volts.		C148	C148A 40 μf C148B 40 μf C148C 10 μf
Tubular, moulded paper, 047 μfd. 1,000 volts.	.047 MFD 1000 VDC MAX.TEMP85C	C163	C163 .047

Fig. 28-8

or low leakage between the plates.

The coated film type of capacitor, called plated mica, is particularly suitable for use where variations in temperature and humidity are likely to be encountered and where close tolerance requirements must be met.

The foil-type fixed mica dielectric capacitors can be obtained with tolerance values of ±2, 5, 10 and 20%. The tolerance value is indicated in the color code given in Fig. 28-9. A variation of ±2% in capacitance value is getting down pretty fine; but with the metallic coated film type, commercial products are available with a tolerance ±1%. In replacing a capacitor it is best to stick to the tolerance level specified.

Mica dielectric capacitors are used for such applications as: coupling capacitors isolating d-c potentials (example, the plate and grid of successive tubes); in AVC circuits; and as a small fixed capacitor which is part of a tuned circuit.

Fixed ceramic dielectric capacitors have an interesting application. As a set gets warm, temperature changes generally cause an increase in both inductance and capacitance, changing the frequencies of the tuned circuits. This is especially serious in the oscillator. Ceramic dielectric capacitors can be made so that the the capacitance goes *down* with rising temperature; by using them in oscillator circuits (for either all or part of the total fixed capacitance), the frequency will remain constant regardless of temperature.

Because of their small size, ceramic capacitors are often used to bypass high-frequency currents.

Paper dielectric capacitors usually are made up of two thin metallic foils sepa-

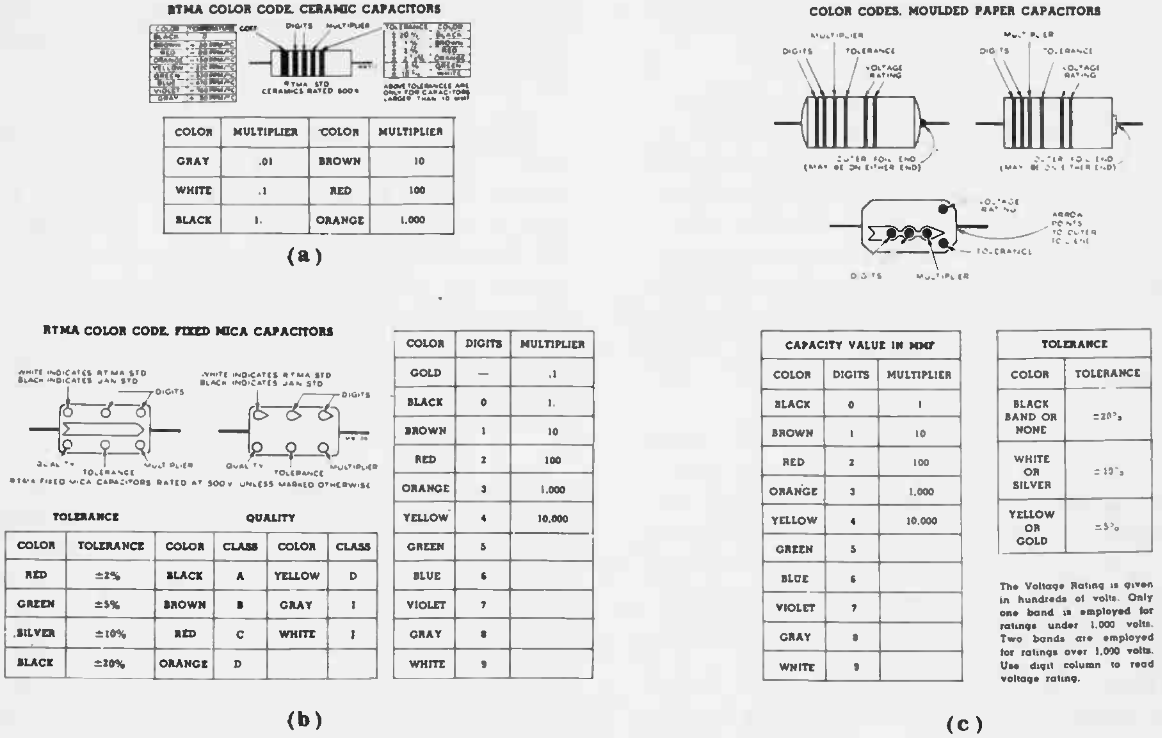

COLOR	MULTIPLIER	COLOR	MULTIPLIER
GRAY	.01	BROWN	10
WHITE	.1	RED	100
BLACK	1.	ORANGE	1.000

(a)

TOLERANCE

COLOR	TOLERANCE
RED	±2%
GREEN	±5%
SILVER	±10%
BLACK	±20%

QUALITY

COLOR	CLASS	COLOR	CLASS
BLACK	A	YELLOW	D
BROWN	B	GRAY	I
RED	C	WHITE	J
ORANGE	D		

COLOR	DIGITS	MULTIPLIER
GOLD	—	.1
BLACK	0	1.
BROWN	1	10
RED	2	100
ORANGE	3	1.000
YELLOW	4	10.000
GREEN	5	
BLUE	6	
VIOLET	7	
GRAY	8	
WHITE	9	

(b)

CAPACITY VALUE IN MMF		
COLOR	DIGITS	MULTIPLIER
BLACK	0	1
BROWN	1	10
RED	2	100
ORANGE	3	1.000
YELLOW	4	10.000
GREEN	5	
BLUE	6	
VIOLET	7	
GRAY	8	
WHITE	9	

TOLERANCE	
COLOR	TOLERANCE
BLACK BAND OR NONE	±20%
WHITE OR SILVER	±10%
YELLOW OR GOLD	±5%

The Voltage Rating is given in hundreds of volts. Only one band is employed for ratings under 1.000 volts. Two bands are employed for ratings over 1.000 volts. Use digit column to read voltage rating.

(c)

Figure 28-9

rated by several thicknesses of fine tissue paper especially made for this use. A simple form of paper capacitor was described in Lesson 17. The conducting foils and paper dielectric are rolled into a compact form, usually cylindrical, impregnated with a suitable compound, and enclosed in either a cardboard or sealed metal case, or molded into a Bakelite container.

While mica and ceramic capacitors are usually rated at 500 volts, with little need for a variety of ratings, paper dielectric capacitors are constructed to meet a number of voltage requirements. The standard voltage ratings are: 100, 200, 400, 600, 1,000 and 1,500 volts The voltage ratings make quite a difference in the size, for a given capacity.

Since a capacitor must provide a low impedance for alternating currents, in practically all television applications the paper capacitor must be wound so that it is non-inductive. This is done by making the foil extend slightly beyond the edge of the paper (one foil projecting from each end) so that the connecting leads are soldered to the entire edge of the foil not to just one end. If connections were made just to one end, the fact that they are wound in a coil would produce some inductions. The outer foil furnishes some shielding action for the inner foil; therefore it is desirable that the outer foil be the one that is connected to ground or closest to ground potential. The lead connecting to the outer foil of a paper capacitor can be identified in the manner shown in Figure 28-9*c*.

Paper dielectric capacitors find many applications where capacitances from 1,000 $\mu\mu fd$ to 1.0 μfd are required.

Capacitor Color Code. – The color code given in the Lesson 26 is practical for many cases, but it does not tell the whole story, and we may as well talk more about it here. While a standard color code has been adopted for fixed resistors, it has not been easy to establish a single standard color code for fixed capacitors. The color code for significant digits (the first and second numbers) and the multiplier (the number of zeros) follows that for resistors. The number indicated is in $\mu\mu f$ (micromicrofarads). However, ceramic, mica and paper dielectric capacitors are required to meet different types of specifications that need to be identified.

Mica capacitor coding must indicate one of four tolerance levels, as shown in Figure 28-9*b*, and also the quality of the mica used (seven classes in all). Moreover, since mica capacitors may be built in accordance with either of two separate sets of specifications, RTMA standard (Radio-Television Manufacturers Association) or JAN standard (Joint Army Navy), this, too, must be indicated as shown.

Ceramic capacitors have two additional tolerance levels that need to be indicated, and in addition must show temperature coefficient. Since these capacitors may be made with very low capacitance, fractional multipliers are needed. The color code and arrangement is shown in Fig. 28-9*a*.

Mica and ceramic capacitors are rated at 500 volts, so no separate voltage rating is normally required, but paper dielectric capacitors are constructed for such wide voltage ranges that the additional marking is needed, as indicated in Fig. 28-9*c*.

Eventually a standard color code for all types of capacitors may be set up; but until that time, just be careful to identify the type of capacitor before attempting to read the capacitance or other values from the color code.

For large capacitors, and even some small ones, it is possible to stamp the capacitance and some additional data right on the outside surface. That is a pretty good idea, and might work out to be the best system after all. However, you'll just have to take capacitors as they come, and learn to identify each type.

Adjustable Capacitors or Trimmers. — Adjustable capacitors or trimmers used in television receivers may be of the mica compression, miniature air or ceramic type. The ceramic dielectric type gives a high order of frequency stability, since it can be designed to compensate for changes in other circuit components caused by temperature variations. This makes it particularly useful in the high frequency circuits. For lower frequency circuit applications the mica compression type is satisfactory. The miniature tuning type can be used as one of the adjustable elements in the Fine Tuning control.

When adjusting compression-type trimmers it is best to keep within the useful range of the capacity adjustment, that is from about 1/7 to 2 turns from tight. If it is necessary for the adjustment to be tighter or looser than the useful range, it is best to adjust or change some other part or control in the circuit. The same holds true for other types of trimmers near either extreme of range.

Electrolytic Capacitors. — Capacitance depends on the area of the conducting plates, the thickness of the dielectric between the plates, and the nature of the dielectric. Capacitors of 5 microfarads or more, if made with mica, ceramic or paper as the dielectric, would have to be large in size - much too bulky for the space limitations of a television chassis. To obtain a capacitor that is physically small, but has a high capacitance, it is necessary to have a large surface area for the conductors and extremely small separation between them with a material of high dielectric constant. The electrolytic capacitor has just these characteristics.

The electrolytic capacitor consists of an electrode of aluminum foil, an electrolyte or conducting liquid, which serves as the other electrode, and an extremely thin film of chemical deposit upon the surface of the foil, to act as the dielectric. The electrolytic capacitor depends on a polarizing voltage for its operation. The capacitor must be 'formed" by applying a d-c formation voltage which forms the dielectric chemical deposit upon the anode or positive aluminum plate. If wrong polarity is applied during use, the dielectric is caused to disappear, and the capacitor is ruined. The capacity depends primarily on the anode surface and the thickness of the formed film. By etching or chemically roughening the anode foil, its surface area is greatly increased and the capacity of the unit is much greater. The thickness of the film also determines the voltage rating, and it is important to remember that there is not much safety margin in this; voltage limitations must be carefully observed.

Etched foil capacitors are used where high capacity is needed but the temperature requirements are not particularly high. Where high values of ripple current must be handled and the temperature requirements are abnormally high (but not over 85° C) plain foil capacitors are used. Electrolytic capacitors are made in sizes from 5 microfarads to 1,000 microfarads, and to operate at d-c working voltages (the voltage at which it is normally required to operate) from 3 to 450 volts. Electrolytic capacitors may be either in single or in multiple units of two, three or four sections.

The outer case of the electrolytic capacitor may be either of metal or of cardboard. Metal case capacitors usually have the case as the negative connection, but some capacitors are constructed with the case insulated. A capacitor with an insulated or "floating' container should not have the case grounded, since this would cause the internal insulation to fail prematurely. As an added protection the metal container may be encased in a cardboard insulating covering.

Metal containers are used in applications involving high ripple current, since the metal container prevents the drying out of the electrolyte as a result of the heat developed from the ripple current. Cardboard containers are satisfactory for practically all applications except those in which ripple currents or temperatures are abnormally high.

As a result of high temperatures and over-voltage, gas may be generated within the electrolytic capacitor. That makes it necessary to have a means for this gas to escape (venting). After venting occurs the capacitor seal is broken and some moisture leakage may result. This, of course, will shorten the life of the capacitor. It is not likely to happen if correct voltage ratings are observed and proper operating temperatures are maintained.

An effective method of checking the condition of electrolytic capacitors is to measure the leakage current. If a capacitor has not been in use for some time the film may have deteriorated and may need to be reformed. For this reason the leakage current should not be measured immediately, but after application of the rated voltage for at least five minutes. The maximum leakage current for an electrolytic capacitor is indicated in Table D

TABLE D

Working Voltage	Leakage Current, Maximum Milliamperes
3 to 100	0.3 + 0.01 x capacitance (mfd)
101 to 250	0.3 + 0.02 x "
251 to 350	0.3 + 0.025 x "
351 to 450	0.3 + 0.04 x "

(Example: 8 mfd, 300V capacitor. Leakage current = 0.3 + 0.025 x 8 = 0.3 + 0.2 = 0.5 ma, max).

Much greater tolerance in capacitance values is permissible with electrolytic capacitors than with other types. Values acceptable for general use are shown in Table E.

TABLE E

Rated Voltage	Tolerance
0 to 35	-10 + 250%
36 to 150	-10 + 150%
151 to 350	-10 + 100%
351 to 450	-10 + 50%

Stray Capacities in a Circuit. – Since capacitive effects result when two conductors are placed close together, but separated by some dielectric, there are many places in an electronic circuit where a capacitive effect is present even though no physical capacitor has been connected. For example, such stray capacity results when two leads are run close together, between adjacent turns of a coil, between the electrodes of a tube, and between the wiring and the chassis. In most cases this is not a desirable effect. It cannot be completely eliminated, but must be kept to as low a value as possible. Stray capacity in wiring and leads will be discussed in a later section. Interelectrode capacity and other stray capacity effects will be studied in detail in later lessons, wherever they are a factor in circuit operation.

Typical Capacitor Troubles. – Capacitors of all types are susceptible to humidity and to over-voltage. Either condition can result in leakage between the plates and a resultant breakdown of the dielectric. When a fixed capacitor or a trimmer becomes leaky, it must be replaced. An electrolytic capacitor however, normally has a leakage current and it should function properly as long as the leakage does not exceed the maximum leakage for the capacitance and working voltage as given in Table D. Even if the dielectric film breaks down, some types of electrolytic capacitors are capable of self-healing, or reforming.

As in the case of resistors, another trouble that may result is loose leads causing intermittent or open circuit. Just as in the case of resistors, this condition may result if too much heat is applied to the leads when soldering.

Capacitors may change in capacitance as a result of dielectric or other changes caused by aging, absorption of moisture, loss of moisture in the case of electrolytics and other causes.

While capacitance value is best checked by a Q-meter or capacity meter, simple tests of capacitor operation can be made by checking initial charge with an ohmmeter, or leakage current with a milliameter, or just by substituting a good capacitor of the correct value.

COILS AND TRANSFORMERS

28-6. As in the case of capacitors, there are a great many different types of coils and transformers used in a television receiver. The word "coil" is used to refer to a single winding, while "transformer" indicates two or more separate windings. The windings form inductances whose values depend on the number of turns, the physical size of the composite unit, and the type of material used as the core (air, iron or powdered iron), as explained in Lesson 17. Coils and transformers may be used for r-f, i-f, audio or power circuit applications. In general, for high frequency applications low inductance values are required, larger inductance values are needed for audio uses, and still larger inductance values are required for power (60 cycle) circuits.

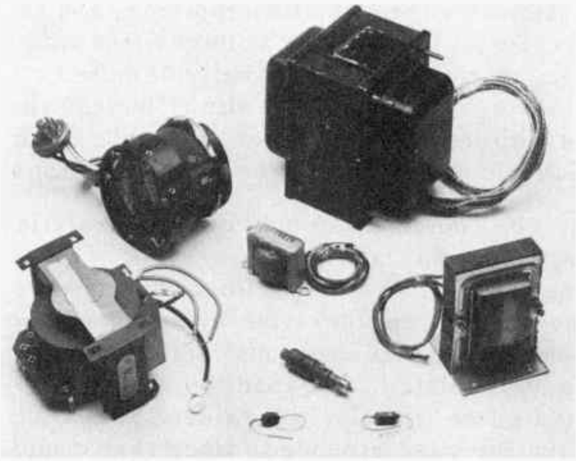

Fig. 28-10

R-f Coils and Transformers. – For television applications, r-f coils require such a low inductance that just a few turns of wire and an air core are sufficient. In fact, for the high frequency channels, 7 to 13, single loops of wire of the proper size and properly connected together provide the required inductance. For the low frequency channels, 2 to 6, greater inductance is required and more turns are used.

Since the inductances are added as coils are connected in series, it is not necessary to have a separate coil for each television channel. A single loop of wire is sufficient for the highest frequency channel, 13. To provide the required inductance for channel 12, an additional loop of wire is connected in series, and so on for each additional channel. All of the coils are mounted on a stationary or "stator" plate in such a manner that a movable part, the "rotor" switch, (in Fig. 28-1, it is S-5 for the antenna coils), can be turned to connect into the circuit the required number of coils to give the proper inductance for the channel desired. Actually, there are five such sets of coils (for the antenna, r-f amplifier, oscillator, and converter circuits). All are mounted together on an r-f rotor unit so that the desired circuit connections are made by a single setting of the Selector Switch.

Of course, a frequency setting cannot be made with inductance alone. The resonant frequency of a circuit depends on the values of inductance and capacitance present in the circuit. However, a coil acts as though it were a true inductance with a small capacitor (the result of the distributed capacitance between the coil windings) in parallel. Therefore, a coil has a natural frequency of its own; but frequency adjustments may be made by varying the inductance or adding additional capacitance. In r-f circuits frequency adjustments are made by means of a movable powdered iron core in certain coils and by small trimmer capacitors. Since the adjustment is quite critical, where both the coil and capacitor are used to adjust a particular circuit they are frequently mounted together in the same unit; for example, the trimmer coil and capacitor L5 and C14 in the 9T240.

R-f coils are either self-supporting or wound on ceramic, bakelite or paper forms. The windings are treated with a binding and protective material to afford mechanical protection and to reduce moisture absorption; mechanical changes or leakage changes due to moisture would affect the frequency stability.

In a coil, in addition to the inductance and the distributed capacitance, there are other characteristics that must be considered. These are the skin effect, the Q or "figure of merit" of the coil, shielding and leakage resistance. These factors have been discussed in other lessons; however, there is one – shielding – that requires further mention here. A shield around the coil or transformer confines the magnetic field of the winding within the limits of the shield and thus decreases coupling. It tends to lower the circuit Q and adds to circuit losses. But by reducing feedback and interstage coupling, it greatly improves the stability of the circuit.

I-f Transformers. – The sensitivity and selectivity of a television receiver depends largely on the selection of components of the i-f amplifiers and their adjustment. The i-f transformer units are provided complete with two (in some cases three) coils on a single form, capacitors for the tuned circuits, and resistors where required to broaden the pass band. The first, second, and third i-f picture transformers do not require a metallic shield; but the other i-f stages (fourth and fifth picture i-f, sound i-f and sound discriminator), where there is a possibility of interaction with other circuits, are mounted within a metallic (aluminum) shield can, with connections coming out to lugs in a bakelite base.

The terminals are identified by the letters A, B, C, and D stamped on the bakelite base adjacent to the proper terminals. The coils are permeability-tuned by slotted screws with which powdered iron cores are moved further into the coil to increase the inductance, or further out of the coil to decrease the inductance. The capacitors in the tuned circuits are of the fixed ceramic type, with a negative temperature coefficient to compensate for other changes in the circuit likely to result from a temperature variation. Each coil, primary and secondary, is adjusted by a separate slotted screw, one at the top and the other reached from underneath the chassis. It is best to consult the service data for a particular receiver to determine which slotted screw adjusts which coil, or whether some other tuning method may be used.

Since many television receivers employ stagger-tuning for the i-f stages, (that is, successive stages have different frequency setup), each coil must be adjusted to its assigned frequency. That, of course, means that although i-f transformers for different stages may look very much alike, their internal arrangement and characteristics may be quite different. When making replacements, be sure you have the right transformer for the right stage, and that the adjustments are made for the correct frequencies.

Peaking Coils. – Peaking coils are used for high frequency compensation in the video amplifier circuits and to peak (give desired characteristics to) i-f and d-c restorer circuits. While physically small, they have appreciable inductance values. The values are specified in the schematic diagram as 36 uh for coil L117, 93 uh for coil L103, etc.

Some peaking coils have a resistor connected in parallel. There is no use in looking around for that resistor; it is usually contained in the form upon which the coil is wound. Since the resistance of the peaking coil is extremely small, the presence of a resistor connected across it would never show up in an ohmmeter test.

The high inductance required for audio frequency and power transformers is obtained by using many turns of wire and an iron core. The lower the frequency that must be handled the more iron there must be in the core to obtain the correct inductance value. That is why power transformers operating at 60 cycles have more iron and are heavier than transformers used in audio and horizontal deflection circuits, which handle frequencies up to 15,750 cycles.

The core material is usually silicon steel in thin sheets or laminations which are insulated from each other by a thin film of oxide (formed in the manufacturing process). The laminations are necessary to break up eddy currents which would otherwise build up to excessive values to cause heating and other losses.

Heating losses also occur in the wire. The larger the wire, the lower the resistance and, therefore, the lower the I^2R loss. For this reason, wire size is usually determined by the amount of current the winding must carry.

Failure of the windings could occur through breakdown of insulation between turns in the same or different windings, or from a winding to the iron core, as a result of overheating or through corrosion in the presence of moisture. When small amounts of impurities are present in the insulating material and the winding is operated at a positive potential above ground, electrolytic action will cause serious corrosion of the wire under conditions of high humidity and high temperature.

As shown in the schematic diagram (Fig. 28-14), the separate windings of audio frequency and power coils and transformers can be checked by measuring their resistance. For example, the audio output transformer T114 has a primary winding that measures 500 ohms, while the secondary is only 0.26 ohms; and the vertical output transformer T108 measures 521 ohms for the primary and 6.9 ohms for the secondary. When checking the windings with an ohmmeter, a reading appreciably different from that called for in the schematic would indicate trouble that must be corrected or the unit replaced.

The filament windings of a power transformer do not have enough resistance for an ohmmeter test. These, however, can be checked by measuring their voltage or current under operating conditions. The correct voltage and current values are given in the schematic. When taking voltage or current readings for the windings of a power transformer, *remember that dangerously high voltages may exist.* The proper procedure is to make the required meter connections *with the power off*, and then turn on the power to take the reading.

Transformer leads to the various windings can be identified by a color code which is based upon the color coding for hookup wire given in Table B. However, since each winding has two leads, or three when there is a tapped connection, the added leads must be identified by two colors. For example, brown is the color for leads to heaters or filaments off ground; the other lead from the filament or heater winding must go to ground and it is colored with black and brown stripes—black for ground connection and brown to show that it is a filament or heater winding.

Deflection Coils, Focus Coils and Ion Trap Magnets. – The deflection coils or yoke, the focus coil and the ion trap magnet fit around the neck of the kinescope; therefore the design of the units is closely tied up with the particular type kinescope with which they are to be used.

Deflection coils, horizontal and vertical, are contained in a unit called the yoke, which also contains associated resistors and a capacitor as shown in the schematic. The horizontal and vertical sections are insulated from each other by a plastic material called "saran." The various leads must be kept well separated (dressed) to prevent the possibility of arcing.

When in position around the neck of the kinescope the yoke should be *moved forward* as far as possible toward the kinescope bulb, for best deflection adjustment.

The Focus coil for the 9T240 is of the electromagnetic type (EM). In later models a combination electromagnetic and permanent magnet type focus coil (EM-PM) is used. A more recent development is a permanent magnet which replaces the focus coil. With this magnet, picture centering is accomplished by adjusting a separate plate on the focus magnet. Focusing is obtained by means of an adjustable shunt, operated by a flexible shaft.

With the EM or EM-PM type focus coil, centering is effected by positioning the coil on its mounting. Approximate focusing is obtained by positioning the focus coil and the ion trap magnet on the neck of the kinescope, and fine focus adjustment is then obtainable by means of a focus control connected in parallel with the winding of the focus coil.

Extension Cables are needed to connect the yoke, focus coil, and kinescope of some receivers, when it is required to operate the receiver removed from the chassis, in cases where the yoke, focus coil, and kinescope are fastened to the cabinet.

When the chassis of these receivers are removed from the cabinet for servicing, the yoke and focus coil are unplugged from the chassis. With either of these two components out of the circuit, the receiver cannot be operated because the B+ circuit has been disconnected. Extension cables must be made up for the proper servicing of these receivers, as indicated in Fig. 28-11.

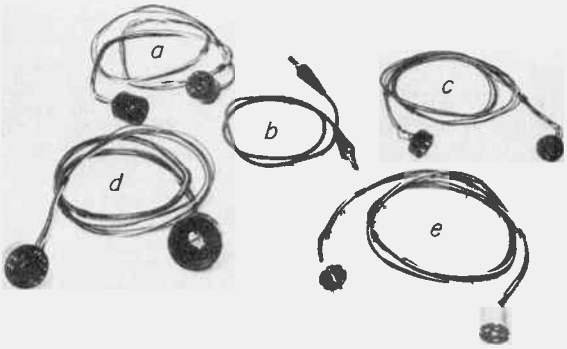

a. Deflection yoke extension cable.
b. High voltage extension lead.
c. Loudspeaker extension cable.
d. Kinescope socket extension cable.
e. Focus coil extension cable.

Fig. 28-11

Ion Trap Magnets. – A number of different types of ion trap magnets have been developed or approved for use in television receivers. These are permanent magnet (PM) arrangements designed to bend the electron beam and trap any negative ions which would otherwise cause injury to the kinescope screen. The various types of ion trap magnets are shown in Fig. 28-12.

Typical Troubles with Coils and Transformers. – Aside from the usual troubles of open coils and shorted windings, which can readily be checked by an ohmmeter, principal troubles encountered with coils and transformers are changes in circuit characteristics or intermittent arcing resulting from improper lead dress.

For r-f and i-f coils, the distributed capacitance between leads placed too close to each other, or too close to the chassis, will affect the frequency adjustment of the circuit. For coils and transformers used in audio, power or deflection

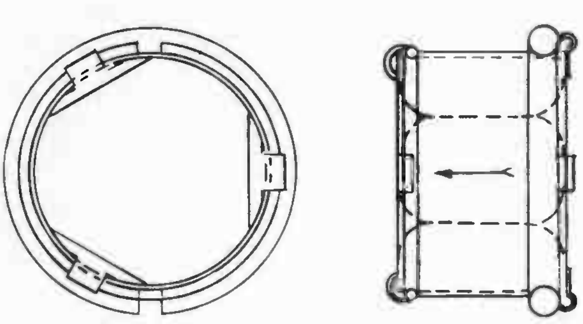

Double ring ion trap magnet.

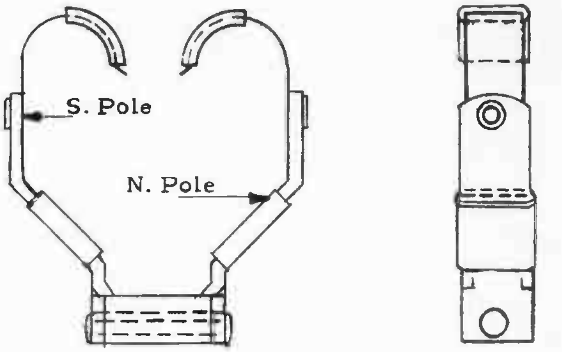

Single bar ion trap magnet.

Fig. 28-12

circuits, where high voltage may be encountered, leads too close together may result in arcing which in turn may cause insulation breakdown between windings, to the core or frame or to the chassis. In general, coil and transformer leads should be as short and as direct as possible.

ADDITIONAL COMPONENTS

28-7. – In addition to the tubes, resistors, capacitors, coils and transformers used in a television receiver, there are a number of miscellaneous items that may require replacement. Most frequently needed for replacement purposes are the pilot lamp, fuses, switches, and control knobs. These parts are generally included in a serviceman's replacement kit so that they are available when needed.

Pilot lamps are not used on all models. They are used mostly on combination models.

Fuses are used in most models to protect the receiver against damage from excess current. The fuses used are usually rated at 0.25 ampere, 250 volts.

Switches used include those on the r-f tuning unit, the On-Off switch on the sound volume control, a TV-Phono switch on combination models as well as on most models that do not contain a phonograph unit.

Switches must operate well, both mechanically and electrically. For good electrical operation there must be high insulation resistance between adjacent lugs and from lugs to the frame, low dielectric loss, low contact resistance and low capacity between lugs or from lugs to frame. Mechanically, a switch should stand up well after 10,000 cycles of operation. Suitable precautions are needed to prevent excessive corrosion of the metal parts under conditions of high humidity.

To meet the above requirements the contact clips and the movable or rotor blades of a switch are usually silver plated brass, which provides good contact with low wearing action; and the shaft, frame and general hardware are cadmium plated steel, to resist corrosion.

Control knobs are available for replacement for the various controls, to match cabinet color or color scheme. Watch out that you do not misplace the retaining springs for these knobs, but if you do, retaining spring replacements are also available.

The wiring and schematic symbols for some miscellaneous parts are shown in Fig. 28-13.

WIRING

28-8. – In a television receiver we are dealing with high frequencies, at which small inductance and capacitance values have an appreciable effect. At power and

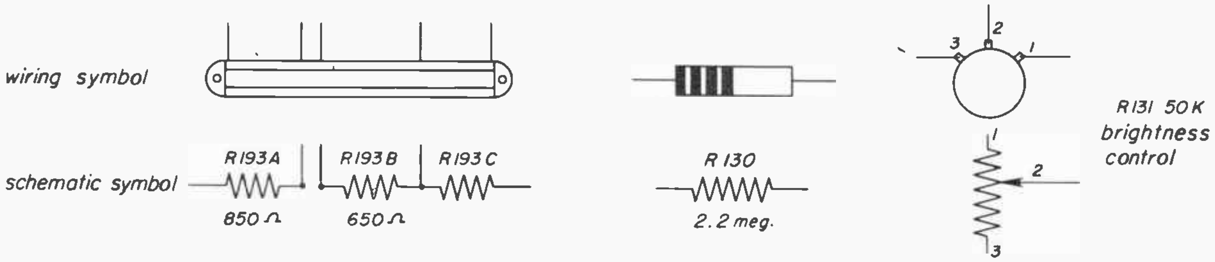

Fig. 28-13

audio frequencies our principal concern in running connecting wires is to insure that there is sufficient insulation and spacing to prevent a short circuit or arcing. At r-f and i-f frequencies, however, we have the additional concern of the inductance and the capacitance added to the high frequency circuits by the wiring.

By following a few general precautions trouble can be avoided.

1. In general, keep high frequency connections as short and direct as possible.
2. Wires at ground or close to ground potential may be dressed close to the chassis.
3. All other high frequency connections should be dressed away from the chassis.
4. Keep grid circuit and plate circuit leads and wiring away from each other.
5. Twist power leads or filament leads where one wire is the return for current flowing in the other. By twisting the wires, since the currents are equal and in opposite directions, the magnetic fields produced will balance or cancel each other and thus prevent their affecting nearby circuits. This is one way of reducing 60-cycle hum picked up from the power circuits.
6. When replacing parts or making any wiring changes, keep the positions of the replacement parts and the lead dress and wiring as close to the original arrangement as possible. Even so, a close check of alignment and other circuit adjustments becomes necessary.
7. When rewiring any part of the circuit, as far as possible follow the wiring color code given in Table B. The standard color code for wiring was designed to make it easier to connect and to trace wiring.
8. Do not make circuit changes unless specifically recommended in the authorized service data or in technical service letters. Where such authorized changes are made, *be sure to tag the changed circuit with a proper notation of the change made* – for the benefit of the next man who may service that set.

Soldering. – An effective wiring job must ensure that good mechanical and electrical joints are made. A good many connection points are provided with feed-through type lugs, that is a lug with a hole in it through which the connecting wire is fed and bent around to ensure a good mechanical connection. In addition, good soldering is needed to make a good electrical connection. Those parts that terminate in wire leads instead of lugs, have the wires tinned so that they will hold solder readily. Also, the connecting or hook-up wires are tinned for the same reason.

A few simple precautions will insure good soldering:

1. Use only a reputable quality tinned hook-up wire.
2. Use only standard rosin-core solder.(Avoid a corrosive flux or acid core solder. This could corrode and impair the connection. Even the so-called non-corrosive soldering fluxes are not suitable).
3. Clean all excess solder from lugs.
4. Push back insulation from the end of the connecting wire and be sure that the wire is clean and tinned.
5. Push the end of the wire through the hole in the lug and make a tight mechanical connection with your long-nose pliers.
6. Make sure that your soldering iron is clean and tinned and that it is hot. *An iron that is not hot enough to make the solder flow freely will not make a good joint.*
7. Apply the iron to the lug or wire and then the solder to the joint as soon as the lug becomes warm (a second or two). Remove the iron as soon as the solder flows freely over the joint. *It is essential not to overheat wires* connecting to such vulnerable parts as resistors or capacitors, which can be injured by too much heat.
8. Allow the joint to cool thoroughly. A good joint has a smooth silvery appearance. A "cold" joint appears dull grey.
9. Test the joint for mechanical strength. If the joint shows any signs of looseness, disconnect it, clean the wire and lug thoroughly and resolder.
10. A connection that is mechanically firm is usually electrically good; but if you have any doubts, test it for electrical continuity.

IDENTIFICATION OF PARTS AND COMPONENTS

28-9. – Throughout the various sections of this lesson we have been studying the parts or components that make up one particular television chassis. It is important to know each part, what it looks like, where it is located on the chassis and in the circuit, and how it performs its particular function as a unit of the television receiver. Many of the answers are given in this lesson, but it is impossible to include all that you need to know about components of a television receiver within the covers of a single lesson. Every lesson of the course included information about components and how they affect the particular circuit or circuits with which each lesson is concerned.

Since this lesson is primarily concerned with the identification of each part and how the parts can be located on the chassis and on the schematic diagram, we now should take a closer look at the complete chassis and the schematic.

Most manufacturers' service data contain pictorial views showing the layout of the parts on the chassis. These are shown in this lesson in Fig. 28-1 (*a* and *b*) for the top and bottom of the chassis. There is also a chassis wiring diagram (Fig. 28-4) which shows the terminals for each part and how the wires are connected to these terminals. The color code for the wires is also shown, so that the tracing of connections is easier. And then, of course, there is the schematic diagram (Fig. 28-14) which shows the circuit arragnement of the various parts. If we add to these photo views of the top and bottom of the chassis to show the actual physical appearance of the chas-and its parts (Fig. 28-2 and 28-3 and 28-4) we have all the aids needed to identify and locate the parts.

For convenience, schematic diagrams are generally prepared so that the component reference symbols run approximately in sequence through the drawing, so that parts are easier to find. Two exceptions to this rule are shown in the schematic in this lesson.

When changes are made, so that there are new parts, it is easier to number the part out of sequence, rather than to renumber the entire diagram. In Fig. 28-14, L67 appears just ahead of L7, indicating that L67 must have been an addition made since the first drawing was released.

The other exception, adapted from military practice, is not always used. It is the application of a different *group* of numbers for components which may be mounted on a subchassis or a different chassis. The 100-group in Fig. 28-14 are those components which are mounted on the r-f sub-chassis; T-115, for example, is the antenna transformer, and V-101 is the first tube on the chassis.

As previously noted in the sections dealing with specific components, considerable information is given on the schematic by giving resistance and capacitance values, the resistance of coil windings, and other circuit notations. Once the schematic part number or reference symbol (call it either name) is known, the location of the part can be readily checked on either the chassis layout diagram or on the chassis wiring diagram. The chassis wiring diagram is of particular value, since it shows clearly the particular terminals to which connections are made and the color coding of the connecting wires.

When a part is suspected of being defective, information given in the schematic and wiring diagrams help materially in checking it; and, if it must be replaced, checking with the wiring diagram ensures that the correct replacement goes in the right position and that the correct connections are made. Of course, there is still the matter of lead dress, and then the adjustment or alignment of the circuits affected; but a discussion of circuit adjustments is deferred for later lessons.

◆

SCHEMATIC DIAGRAM OF CHASSIS KCS28 USED IN THE RCA VICTOR 9T240 RECEIVER

This is the basic TV circuit for RCA Victor models: 8T241, 8T243, 8T244, 8T270, 8TC270, 8TC271, 8TK29, 8TR29, 8TK320, 8TV321, 8TV323, 9T246, 9T256, 9T270, 9TC-272, 9TC275, 9TC247, 9TC249, 9TW309, 9TW333, 9TW390, S1000, T100, T120, T121, T164 TC165, TC166, TC167, TC168, TA128, TA129, TA169, TC124, TC125, TC127.

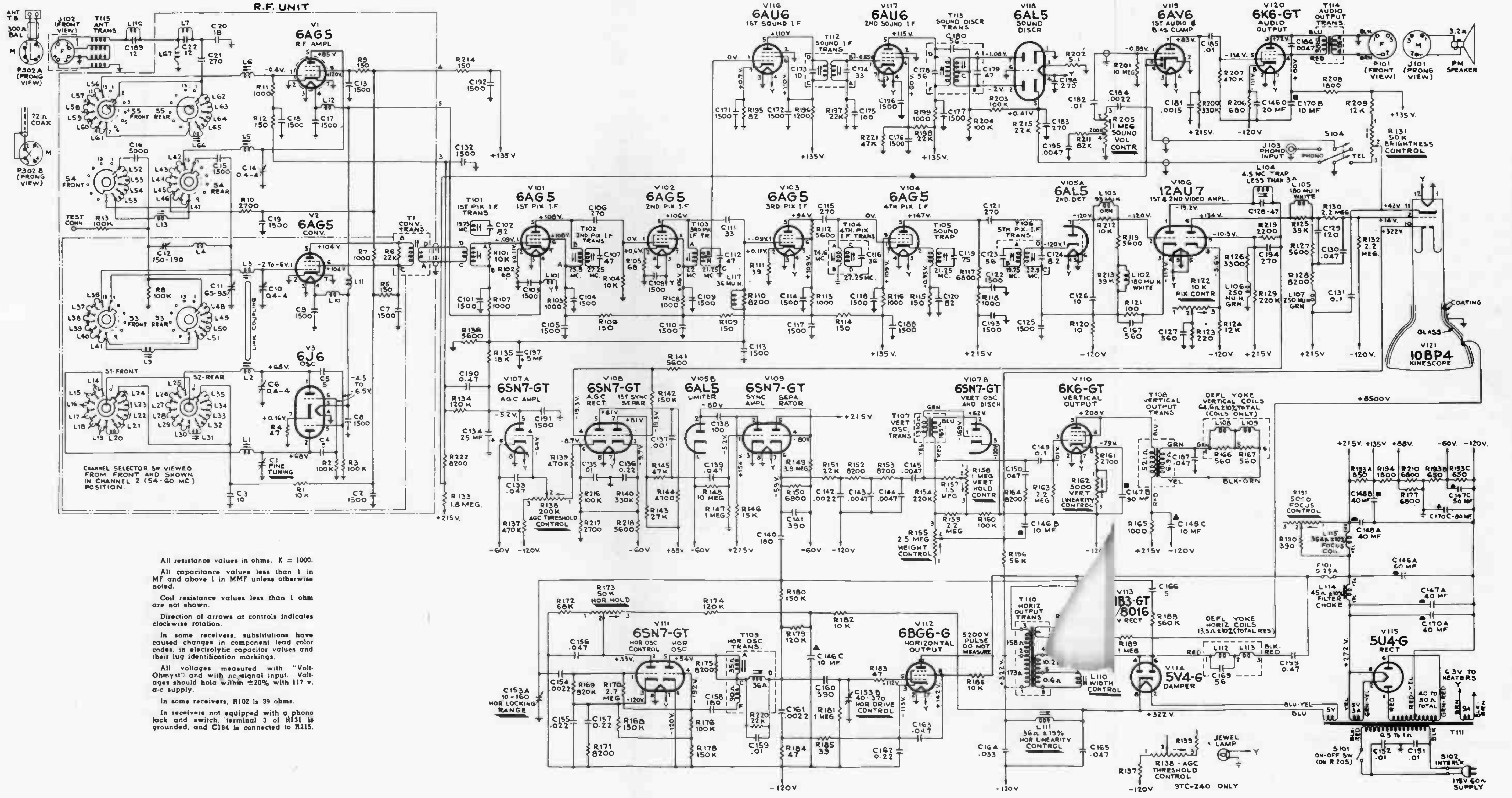

All resistance values in ohms. K = 1000.

All capacitance values less than 1 in MF and above 1 in MMF unless otherwise noted.

Coil resistance values less than 1 ohm are not shown.

Direction of arrows at controls indicates clockwise rotation.

In some receivers, substitutions have caused changes in component lead color codes, in electrolytic capacitor values and their lug identification markings.

All voltages measured with "Volt-Ohmyst" and with no-signal input. Voltages should hold within ±20% with 117 v. a-c supply.

In some receivers, R102 is 39 ohms.

In receivers not equipped with a phono jack and switch, terminal 3 of R131 is grounded, and C184 is connected to R215.

Fig. 28-14

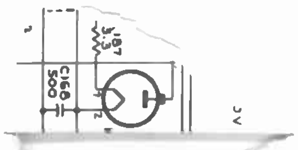
187
3.3
C168
500
0V

SCHEMATIC DIAGRAM OF CHASSIS KCS28 USED IN THE RCA VICTOR 9T240 RECEIVER

This is the basic TV circuit for RCA Victor models: 8T241, 8T243, 8T244, 8T270, 8TC270, 8TC271, 8TK29, 8TR29, 8TK320, 8TV321, 8TV323, 9T246, 9T256, 9T270, 9TC-272, 9TC275, 9TC247, 9TC249, 9TW309, 9TW333, 9TW390, S1000, T100, T120, T121, T164 TC165, TC166, TC167, TC168, TA128, TA129, TA169, TC124, TC125, TC127.

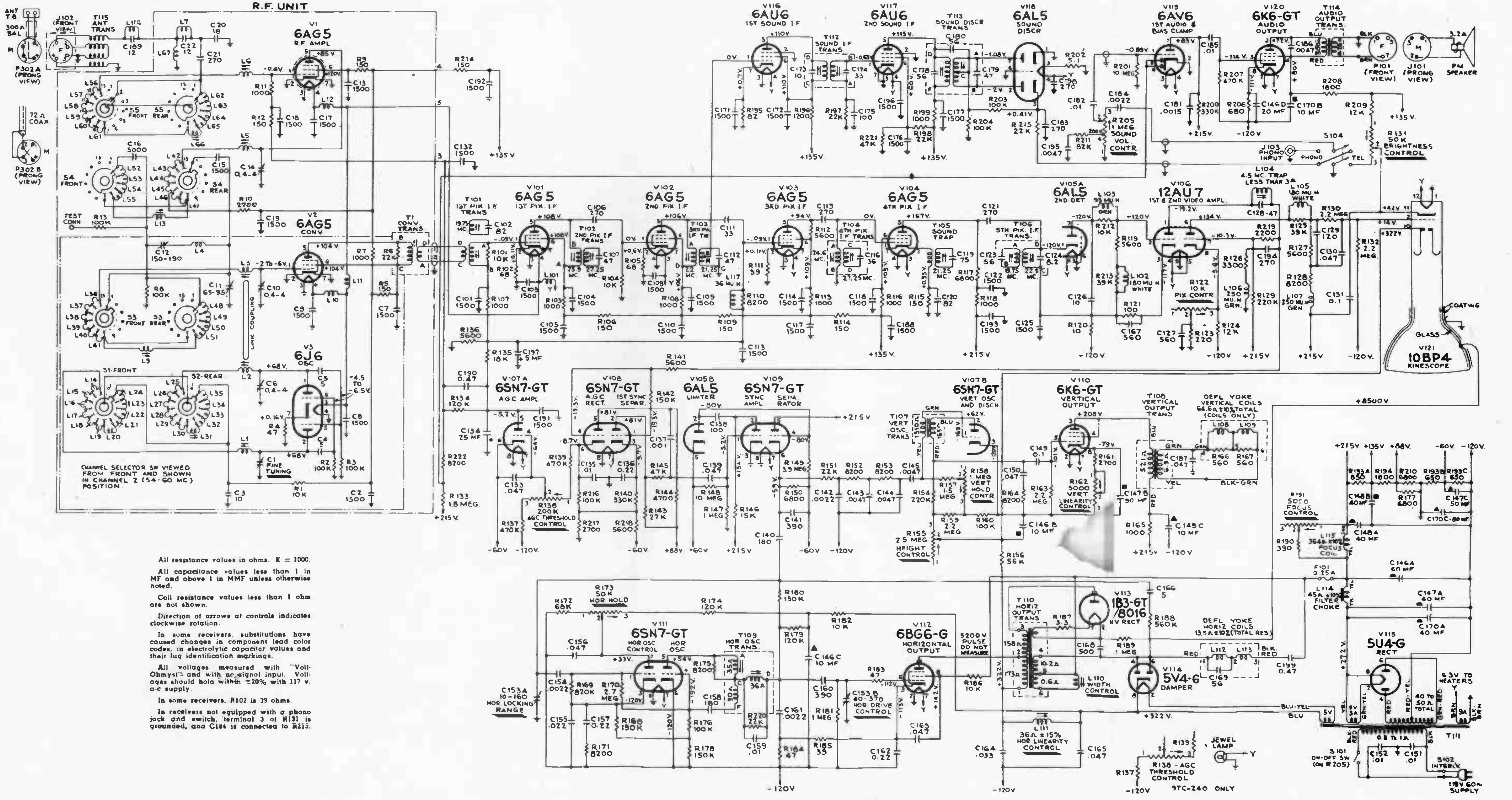

All resistance values in ohms. K = 1000.

All capacitance values less than 1 in MF and above 1 in MMF unless otherwise noted.

Coil resistance values less than 1 ohm are not shown.

Direction of arrows at controls indicates clockwise rotation.

In some receivers, substitutions have caused changes in component lead color codes, in electrolytic capacitor values and their lug identification markings.

All voltages measured with "Volt-Ohmyst" and with no signal input. Voltages should hold within ±20% with 117 v. a-c supply.

In some receivers, R102 is 39 ohms.

In receivers not equipped with a phono jack and switch, terminal 3 of R131 is grounded, and C184 is connected to R215.

Fig. 28-14

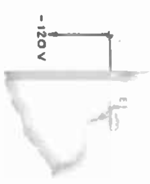
-120 V

NOTES

NOTES

TELEVISION SERVICING COURSE

PREPARED BY

RCA INSTITUTES, INC.
A SERVICE OF RADIO CORPORATION OF AMERICA

HOME STUDY DEPARTMENT
350 West 4th St., New York 14, N. Y.

LESSON TWENTY NINE

POWER SUPPLIES

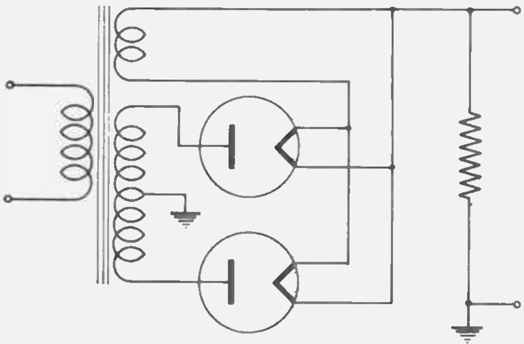

Lesson 29

POWER SUPPLY FUNCTIONS

29-1. General Power Supply Requirements in the TV Receiver. – In order to provide the proper operating voltages for the many tubes in the TV receiver circuits, one or more power supplies must be provided. A low voltage supply, with a maximum voltage of from 250 to 350 volts is adequate for providing plate, screen-grid and grid bias voltages for all tubes including the low voltage circuits of the kinescope. But, for the high voltage second anode of the kinescope, a supplementary power source is needed.

The low voltage power supply must provide sufficient power to operate many tubes and circuits, some of which draw appreciable current. Therefore, the low voltage power supply must be capable of an output of 200 to 300 milliamperes at the rated voltage.

The high voltage power supply, however, must provide the power needed for the high voltage second anode of the kinescope. The current requirement for this circuit is just that of the electron beam, which is quite small – in the order of one milliampere. This greatly simplifies the problem of constructing a high voltage supply, and at the same time removes most of the danger inherent in units operating at high voltage.

Elements in a Power Supply Circuit. – The essential elements in a power supply circuit are shown in the block diagram below.

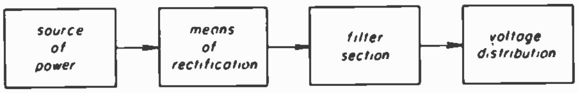

Fig. 29-1

This includes: a source of power, a means of rectification, a method of filtering the rectified output, and a means of voltage distribution to the circuits being operated. The power source for the low voltage power supply is the normal 60 cycle, 110-120 volt line. From this source, by means of a suitable transformer, the proper voltages are obtained to operate the filaments of most tubes and the rectifier.

For the low voltage power supply it is customary to use a full wave rectifier, which may be either a duodiode, two separate diodes or two selenium rectifier sections. The rectified voltage output contains a considerable ripple voltage, at 2 x 60 cycles or 120 cycles per second, which must be filtered to give a constant d-c voltage output. The size of the capacitors, choke coils and resistors needed in the filter section depends on the current requirements of the circuit, which in the low voltage power supply is quite large. The voltage distribution throughout the receiver circuit, to provide the required grid bias, screen grid and plate voltages and other low voltage needs, is effected by a voltage divider network and voltage dropping resistors that may be scattered throughout the chassis. The main parts of the low voltage power supply are shown in Fig. 29-2.

Since the current requirement for the high voltage power supply is so low, the use of a transformer to step up the 120 volts of the 60 cycle line to 10,000 volts or more is not necessary. It is far more efficient, *and much safer*, to use part of the energy from the horizontal deflection circuit as the power supply source. This energy, in the form of a pulse at 15,750 cycles per second, is stepped up to the desired value and rectified by a half wave rectifier; or the desired high voltage is obtained by the use of a voltage multiplier circuit. The rectified voltage is then filtered and connected directly to the high voltage anode of the kinescope, or the connection may be through a limiting resistor. The high voltage power supply section of a TV receiver is shown in Fig. 29-3.

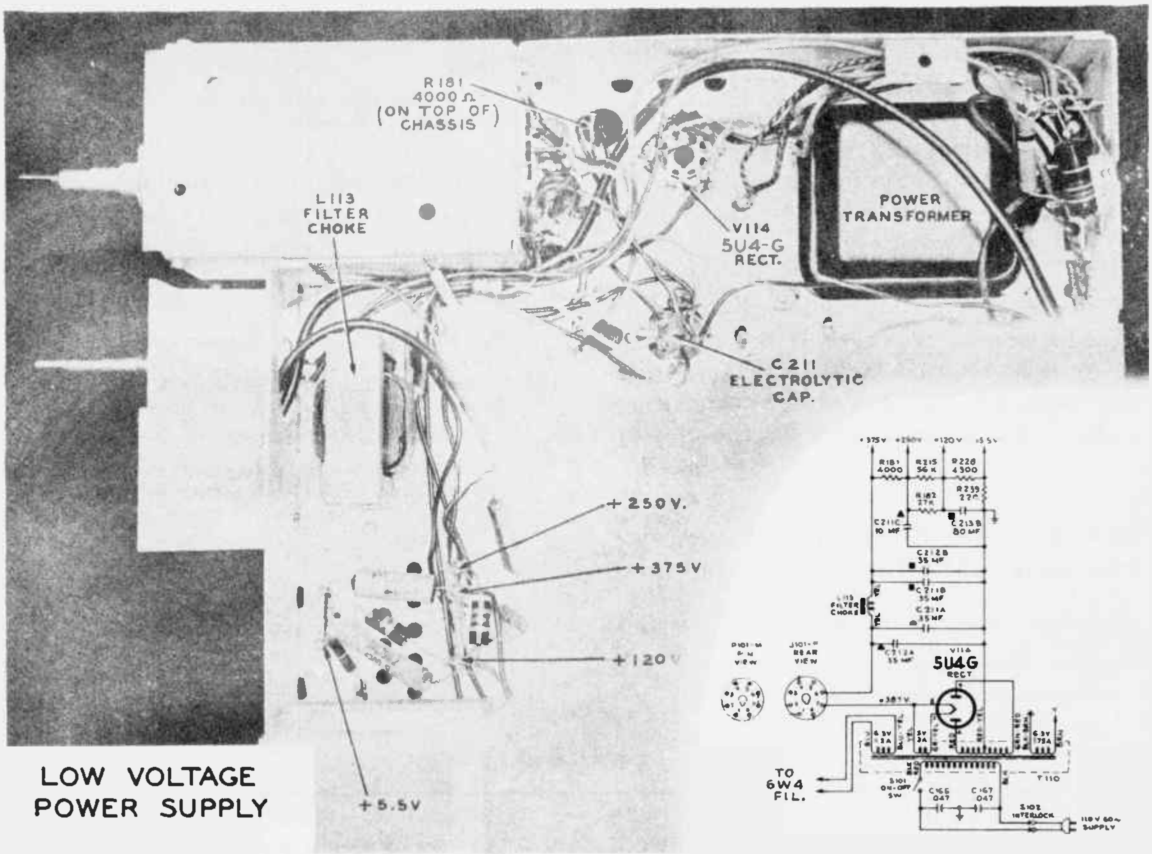

Fig. 29-2

The essential elements of the low voltage and high voltage power supplies, and how they operate will be studied in detail in the sections that follow.

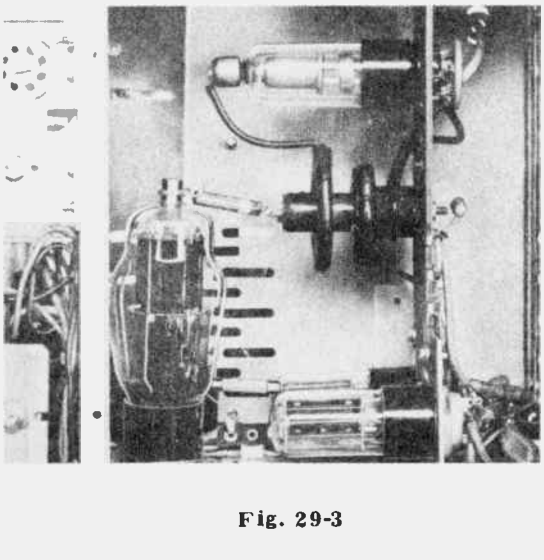

Fig. 29-3

LOW VOLTAGE POWER SUPPLY

29-2. Power Source. – In order to provide the voltage and current requirements for the various circuits of a TV receiver, we have available as our primary source the 60 cycle 110-120 volt a-c line. This power, must be modified by the rectifier circuits, however, to provide the correct operating voltages and currents for the specific receiver circuits.

Voltage and Current Requirements. – Power must be provided to heat the filaments of the various tubes. Most of the tubes of the TV receiver operate on 6.3 volts; and, since they are of the cathode-heater type, a-c operation is satisfactory. However, the operating voltages applied to the grid, cathode, screen grid and plate of these tubes must be direct, not alternating.

To take a specific example, let us consider the voltage and current requirements to operate the tubes of a typical television, radio, phonograph combination that has two low voltage power supplies – one for the TV chassis and one for the radio chassis, which includes the sound section of the TV receiver.

A quick check of these voltage and current requirements, together with a glance at the receiver schematic diagram, will give an estimate of the voltages and currents that must be provided by the power supply.

Since the radio chassis is simpler, we will summarize that first as follows:

Filament supply: 9 tubes at 6.3 volts - current requirement 3.0 amps. 1 tube at 5.0 volts-current requirement 2.0 amps.

Total filament current 5 amps.

Maximum direct voltage: maximum positive 295. Maximum negative 16. Total range 311 volts.

Direct current requirement: total approximately 123.3 ma.

The TV chassis requirements are a bit more complex. These may be summarized as follows:

LOW VOLTAGE REQUIREMENTS

Filament supply: 18 tubes at 6.3 volts-current requirement 7.45 amps. 1 tube at 6.3 volts-current requirement 1.2 amperes. 1 tube at 5.0 volts - current requirement 3.0 amperes.

Total filament current: 11.65 amps.

Maximum direct voltage: maximum positive to ground 395 volts. Maximum negative to ground 58 volts. Total range 453 volts.

Direct current requirement: total approximately 284.2 ma.

HIGH VOLTAGE REQUIREMENTS

Filament supply: 1 tube at 1.25 volts - current requirement 0.2 amperes.

TABLE A

TUBES	PLATE VOLTS TO GROUND	GRID VOLTS TO GROUND	SCREEN & PLATE CURRENT	HEATER VOLTS	HEATER CURRENT
TV Chassis Voltage and Current Requirements					
4 6AU6	121 volts	–0.1	8.0 ma.	6.3	0.3 amp.
2 6AL5	–2 volts	0		6.3	0.3 amp.
3 6CB6	166 volts	–0.8	12.3 ma.	6.3	0.3 amp.
1 6J6	135 volts	–2.1	17.0 ma.	6.3	0.45 amp.
2 12AU7	295 volts	–0.5	10.5 ma. (each section)	6.3 (parallel)	0.3 amp.
3 6SN7–GT	395 volts	–58	2.3 ma. (each section)	6.3	0.6 amp.
1 6K6–GT	365 volts	0	30.0 ma.	6.3	0.4 amp.
1 6BG6–G	5000 + volts	–33	50 (max.)	6.3	0.9 amp.
1 1B3–GT	12,000(filament to ground)		2 ma.	1.25	0.2 amp.
1 6W4–GT	380 volts		62.5 ma.	6.3	1.2 amp.
1 5U4–G	387 (filament to ground)		270.ma.	5.0	3.0 amp.
1 17CP4	12,000 volts	8.3	1.0 ma.	6.3	0.6 amp.
Radio Chassis Voltage and Current Requirements					
6CB6	203 volts	–0.9	12.3 ma.	6.3	0.3 amp.
6J6	87 volts	–6.4	8.5 ma.	6.3	0.45 amp.
6BA6	192 volts	1.1	15.2 ma.	6.3	0.3 amp.
6AU6	186 volts	0	10.6 ma.	6.3	0.3 amp.
6AL5				6.3	0.3 amp.
6AV6	94 volts	–0.7	.5 ma.	6.3	0.3 amp.
6C4	87 volts	–16.0	11.8 ma.	6.3	0.15 amp.
2 6V6GT	295 volts	–16.0	32.2 ma. (each)	6.3	0.45 (each)
5Y3GT	310 (filament to ground)		125 ma.	5.0	2.0 amp.

Maximum direct voltage: 12,000 volts.

Direct current requirement: approximately 1.0 milliamperes.

While these summaries are approximations, they do give a reasonable estimate of the voltages and currents that must be supplied to operate the receiver. To obtain these required voltages and currents we first need to connect a power transformer to the 60 cycle 110-120 volt line primary power source.

Power Transformer. – A power transformer is an a-c operated device consisting of a primary winding, which connects to the 60 cycle a-c line, and a number of secondary windings, wound on a laminated iron core to concentrate the magnetic lines of force. A schematic for a typical power transformer is shown below.

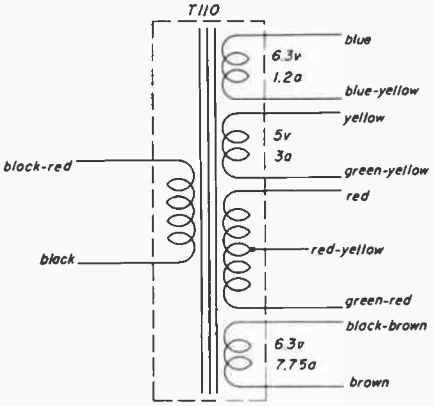

Fig. 29-4

Alternating current in the primary causes a varying magnetic field which cuts across the wires of the secondary coils. When the coupling between the primary and secondary coils or windings is close and the magnetic field concentrated, as is the case when an iron core magnetic path is provided, practically all of the power in the primary winding is coupled to the secondary windings. Any power lost in the transfer from primary to secondary circuits appears as heat.

Power is voltage times current, or E x I. Therefore, when we consider the transfer of power from the primary to the secondary circuit we are always dealing with both voltage and current. The voltage transfer is easy to understand – if we know the turns ratio between the secondary and primary windings. Neglecting losses, the voltage induced in the secondary is directly proportional to the ratio of the secondary to the primary winding turns. Thus if 110 volts a-c is applied to 100 turns in the primary, and the secondary winding has 400 turns, the voltage is stepped up to 4 x 110 or 440 volts. But for another secondary winding which has only 5 turns, the voltage is stepped down to 5/100 x 110 or 5.5 volts.

When it comes to determining the current transfer between primary and secondary windings or vice versa, the problem is somewhat more difficult. If the secondary windings of the transformer are open circuited, voltage will be induced in the windings, but no current can flow in any winding until the circuit is closed by connecting a load across the winding.

When there is no load on the secondary, there is practically no current flowing in the primary winding either. This results, because, although the primary winding is directly across the 110 volt a-c line, the inductance of the winding causes a back electromotive force (emf) or self induced voltage which practically equals the applied voltage. When a load is placed on the secondary so that current flows in the secondary winding, the back emf of the primary winding is reduced and sufficient current flows in the primary so that the voltage times the current (that is the power) is equal to the voltage times the current (the power) in the secondary winding. This assumes that there are no losses. Thus, no power is taken from the primary circuit of a transformer until there is a load on the secondary. When there is a load on the secondary winding, the primary will supply the power that the load requires. When there are loads on several secondary windings, the primary will supply an amount of power equal to the total power used in the secondary windings.

Here is how it works out. Suppose we connect the filament of just one tube, a 6W4-GT, to the top 6.3 volt winding of the power transformer shown in Fig.29-4. The filament of this tube draws 1.2

amperes of current when operated at 6.3 volts. The total power used in that circuit is then 6.3 volts x 1.2 amperes = 7.56 watts. This power must be supplied by the primary circuit. Therefore, when 110 volts is applied to the primary, the current in the primary must be 7.56 watts divided by 110 volts, which equals approximately 0.07 amperes.

Now let's connect the filaments of other tubes across the bottom 6.3 volt winding of our power transformer. The filaments are connected in parallel so that the currents are added. We can connect 19 tubes including the kinescope to use up the maximum rating of 7.75 amperes shown. This secondary then uses 6.3 volts x 7.75 amperes = 48.825 watts.

Now we have two windings drawing power from the primary, a total of 7.56 plus 48.825 equals 56.385 watts. To supply this power, the current in the primary winding will be 56.385 divided by 110,or approximately 0.5 amperes.

As additional loads are connected to the other windings, or as additional tubes are connected, the increased load in the secondary circuits will result in additional current in the primary winding.

Losses due to resistance in the windings and other transformer losses result in heat being generated in the transformer. This heating effect, approximately equal to I^2R, goes up rapidly as the current in the transformer winding increases. We hold down this loss by using larger size wires in the windings that must carry heavy current. A transformer is rated to handle a certain maximum amount of power without overheating. When that power rating is exceeded, transformer trouble may result because of the excessive heat produced.

Identifying Transformer Windings. – In order to properly connect the many leads from a power transformer, the various windings and leads must be positively identified. This is done by color coding the leads, as shown in Fig. 29-4. Refer to Lesson 26 for a full discussion on wire color coding. Transformer lead color coding is always shown clearly in Service Data Schematics.

When in doubt, a positive check can be made by resistance and voltage measurements. First, with no voltage applied, measure the resistance of each winding with an ohmmeter. The highest resistance reading is obtained from the high voltage secondary winding (about one hundred ohms – sometimes more). This winding usually has three leads, one a center tap. The next highest resistance is obtained from the primary winding, usually less than 10 ohms. The filament windings have so little resistance that they will give a zero resistance indication with an ohmmeter.

To identify the various filament windings, 110 volts from the 60 cycle a-c line is applied to the primary winding and the voltage of the filament windings is measured. Where there are two windings that give the same voltage, as the two 6.3 volt windings of the transformer of Fig. 29-4, the winding that has the heavier wire is designed to handle the larger amount of current.

Filament Power. – Since all the vacuum tubes used in the receiver are of the hot-cathode type, the proper voltage must be supplied to the filament or heater of the tube. This filament voltage is supplied by a step-down secondary winding of the power transformer in practically all cases. Most of the tubes used, like the 6AU6, 6SN7, 6AG5 etc., require 6.3 volts across their filaments. This voltage will then allow current to flow through the filament, heating it to the proper temperature.

The power transformer has several step-down secondaries. This can be seen in Fig. 29-4. Practically all the 6.3 volt filaments are placed across the secondary winding which produces the required voltage, and can handle the total current.

Not every 6.3 volt tube is connected here, however. One of these 6.3 volt tubes, the damper stage, is connected to a separate filament winding because this stage has a large d-c voltage tied to its heater-cathode lead, *but not across its filament*. In order to keep this d-c voltage from the filaments of the other tubes, which might cause internal tube arcing, the damper tube filament is connected to its own separate 6.3 volt secondary winding. Some damper tubes like the 5V4-G only require 5 volts across its filament; it would be connected to its own 5 volt secondary. This can be seen in Fig. 29-29.

The low voltage rectifier tube, 5U4-G, only requires 5 volts, but has a large d-c voltage tied to one side of its filament. This is the d-c output, which is the required B plus voltage, produced from the a-c input by the rectifier. The rectifier filament, therefore, is heated by its own separate 5 volt secondary.

In most receivers, the kinescope filament, which requires 6.3 volts is connected to the same secondary as most of the other stages. However, when the cathode is connected to a high d-c voltage, then one side of the filament is also tied to this same voltage. This places the cathode and filament at the same potential and prevents arcing between them. With a large d-c voltage on one side of the filament, it cannot be connected to the filaments of other stages; otherwise arcing might take place inside the other tubes. In this case the kinescope filament would have its own 6.3 volt secondary.

Two other stages also have their filaments connected to separate windings. These tubes are the 1B3-GT, the high voltage rectifier, and the 1V2 focus rectifier for the electrostatic focus kinescopes. Both these stages are in the high voltage circuit, with one side of their filaments connected to part of the high voltage. They get their filament voltages from separate step-down secondaries of the high voltage horizontal output transformer. This is shown in Fig. 29-30.

RECTIFIER CIRCUITS

29-3. In a rectifier circuit we can supply a high voltage secondary winding on our power transformer, to provide the 300 to 400 d-c volts required, but we must add a rectifying device to change the a-c output of the high voltage winding to pulsating d-c. The ripple that remains in this voltage output of the rectifier is then smoothed out by a suitable filter circuit.

The rectifying device used in the low voltage supply of a TV receiver may be either a vacuum tube or tubes or a selenium rectifier. Since we need to provide for high current requirements in the low voltage circuits of the receiver, the most efficient rectifying method must be used. This usually means the use of a full-wave rectifier, so that both halves of the a-c cycle can be utilized. For the high voltage power supply, where very little current is required, a half-wave rectifier utilizing only one half of the a-c cycle is satisfactory.

Most of the TV receivers use the 5U4-GT tube in a full-wave rectifying circuit to provide the d-c voltage requirements of the TV chassis. For the lower power requirements of the radio chassis of combination sets, the 5Y3-GT is frequently used. The selenium rectifier is used in some receivers where the current requirements are moderate.

The Vacuum Tube Full-Wave Rectifier. – For a better understanding of the operation of the full-wave rectifier used in the low voltage power supply of our TV receiver, let us start with a quick review of the action of a diode.

If a diode is connected to a 60 cycle, 110 volt source, current will flow when the plate is positive, but will not flow when the plate is negative, with respect to the cathode. Of course, we must connect a limiting resistor or load in the circuit, as shown in Fig. 29-5(a). When the resistor is connected in the cathode side of the circuit, the polarity of the d-c voltage across the resistor or load is such that the cathode end is positive. As indicated in Fig. 29-5(b), current flows through the tube only during the positive half-cycle of the input voltage, and the output voltage across the resistor is a pulsating voltage corresponding to the positive half-cycles of the input voltage. The negative half-cycle of the a-c input does not produce any output in such a half-wave rectifier circuit.

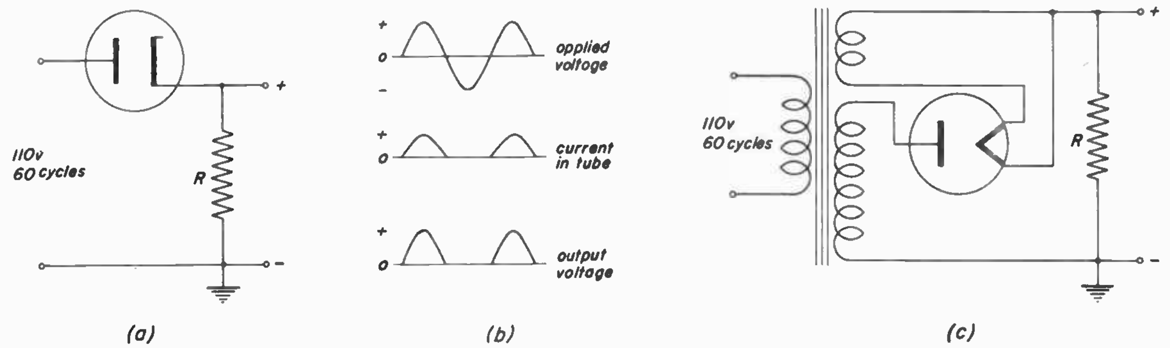

Fig. 29-5

Since there is some voltage drop within the tube itself when it is conducting, the average pulsating voltage obtained across the output resistor will be less than the input.

It is obvious that when we require a higher voltage, as we do in TV circuits, the input voltage to the tube must be stepped up considerably above the 110 volts available. This is done by the high voltage secondary winding of our power transformer. In addition, the power transformer provides a filament winding to heat the filament or heater of the diode as shown in Fig. 29-5(c).

In the simple half-wave rectifier circuit shown, we obtain a pulsating voltage from the positive half cycles of the input voltage, while the negative half cycles of the input are lost. This arrangement might be satisfactory for some purposes, but for greater current output we want to utilize both half cycles of the input voltage. All we have to do is to use two diodes, connected in such a manner that one conducts on the positive half cycle while the other conducts on the negative half cycle of the input voltage. The two outputs are combined so that, as shown in Fig. 29-6, the gap in the voltage pulsations of one half-wave rectifier are filled in by the second. The combination, therefore, is a full-wave rectifier.

The cathodes of the two diodes are connected together, and return to the grounded tap on the high voltage secondary windings, with the load resistor connected in the cathode side of the circuit as before.

With this arrangement V1 conducts during the positive half-cycle of the input voltage to develop pulsations of voltage across the load resistor. During this period the plate of V2 is negative in respect to its cathode and this tube does not conduct. But for the next half-cycle the plate of V2 becomes positive and the plate of V1 negative in respect to their connected cathodes. Now V2 conducts

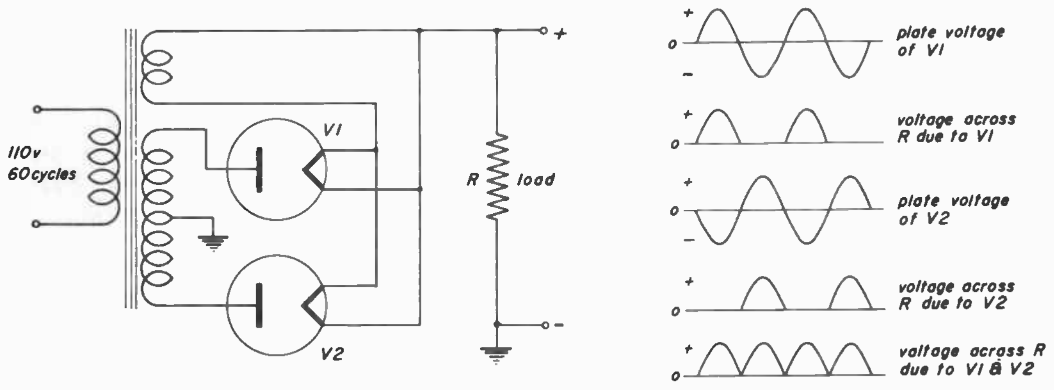

Fig. 29-6

while V1 is inoperative. As V2 conducts, pulsations of voltage develop across the load resistor to fill in the gaps between the pulsations that develop as V1 conducts. The result is not a steady direct voltage; but the pulsations are now at the rate of 120 rather than 60 per second, with practically no gap between pulses. However, there is still a 120-cycle ripple voltage present that needs to be filtered.

Selenium Rectifier. – The function of a rectifier is to permit current to pass in one direction much better than in the opposite direction. Even though some current may pass in the reverse direction, the device will act as a rectifier as long as the ratio of current in the desired direction to the back current in the reverse direction is quite large. While the diode is an exceptionally good one-way electronic valve, there are other devices that can serve well as rectifiers. There are certain combinations of thin films of metals which permit electrons to pass more easily in one direction than in the other. Two combinations that work particularly well are the copper oxide rectifier, a thin film of copper oxide on a copper plate, and the selenium rectifier, a specially prepared film of selenium on a metallic surface such as iron. Of these two, the selenium rectifier is the more efficient – with a ratio of front to back conductivity of approximately 2,000.

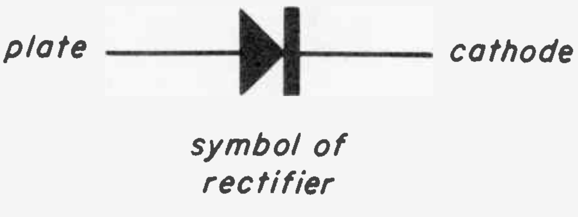

Fig. 29-7

Figure 29-7 shows the symbol used for metallic film rectifiers. The triangular part of the symbol is an arrow head which points in the direction of conventional current flow through the rectifier. Since the electron motion is opposite, the electrons in the rectifier circuit move in a direction opposite to that indicated by the arrow head. In other words, the arrowhead represents what would be the anode in a vacuum tube rectifier, while the solid bar corresponds to the cathode, which is the B plus side in a rectifier circuit.

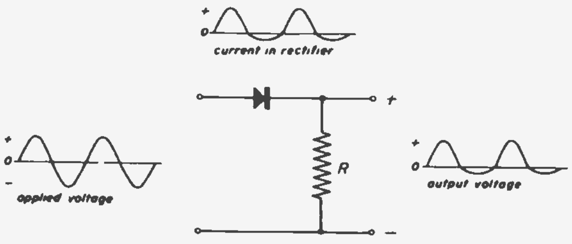

Fig. 29-8

A half-wave rectifier circuit is shown in Figure 29-8. During the positive half-cycles of the applied voltage, when the rectifier conducts best, positive voltage pulses develop across the load resistor, while only a slight reverse voltage appears for the negative half-cycle of the applied voltage. All we need do to get rid of the reverse voltage and smooth out the voltage pulsations to a considerable extent, is to connect a capacitor across the output load as shown in Fig. 4-9. If the capacitor is sufficiently large, it will charge up in the periods in which the rectifier conducts best, but will discharge only slightly during the opposite half-cycle of the applied voltage. The result is the considerably smoothed output voltage shown.

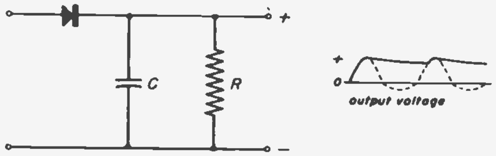

Fig. 29-9

To form a full wave rectifier circuit, we can use two of the metallic rectifier units in the circuit shown in Fig.29-10. What we have here is a voltage doubler circuit. It is the type of circuit in TV receivers using the selenium rectifier. It is used in order to obtain a sufficiently high direct voltage for the needs of normal receiver circuits. To use a step-up transformer winding is not desirable because of the high reverse current that would result in the selenium rectifier circuit. A more detailed discussion of voltage doubler circuits is given in a later Section, but we can describe the operation of this circuit very briefly here.

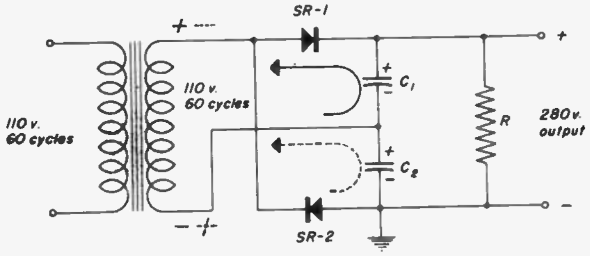

Fig. 29-10

On the positive half-cycle of the secondary voltage, as shown by the solid line polarity in Fig.29-10, SR-1 will conduct. The direction of electron flow will be as shown by the solid line arrow. As a result, C_1 will charge with the polarity indicated, to about the value of the secondary voltage. On the negative half cycle, as shown by the dotted line polarity, SR-2 will conduct. The direction of electron flow will be as shown by the dotted line arrow. This will charge C_2 to approximately the value of the secondary voltage, with the indicated polarity.

The voltages across C_1 and C_2 are in series with each other. This will produce across the parallel resistor R a voltage approximately equal to twice the secondary voltage.

The selenium rectifier has the advantage of small size, the ability to be mounted in almost any position, and cooler operation since it does not require a filament. Its use eliminates the need for a filament winding for the low voltage rectifier and enables a smaller high-voltage secondary winding on the power transformer than is required for a diode type rectifier.

The selenium rectifier will age with time, resulting in decreased output voltage. When the output voltage at normal load drops more than 15 percent of the original rated value, the selenium rectifier should be replaced.

Filter Circuits. – The output voltage of a rectifier, whether it be of the vacuum tube or the selenium type, is a pulsating direct voltage. It always has the same polarity, but the instantaneous voltage values fluctuate around an average value. We can consider this output to be made up of two components, an average direct voltage and a ripple, as indicated in Fig. 29-11.

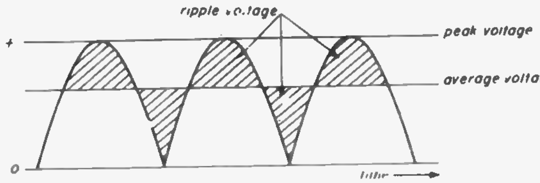

Fig. 29-11

For a half-wave rectifier the ripple frequency is equal to the applied voltage, or 60 cycles for a 60 cps input. For a full-wave rectifier, the ripple frequency is twice the 60 cps input, or 120 cycles. In order to remove the ripple, we need a filter circuit. Filter circuits are made up of combinations of capacitors, inductors and resistors.

The filtering action of a capacitor is illustrated in Fig. 29-12. The output of a half or full-wave rectifier is in the form of pulses as indicated in Fig. 29-12(a).

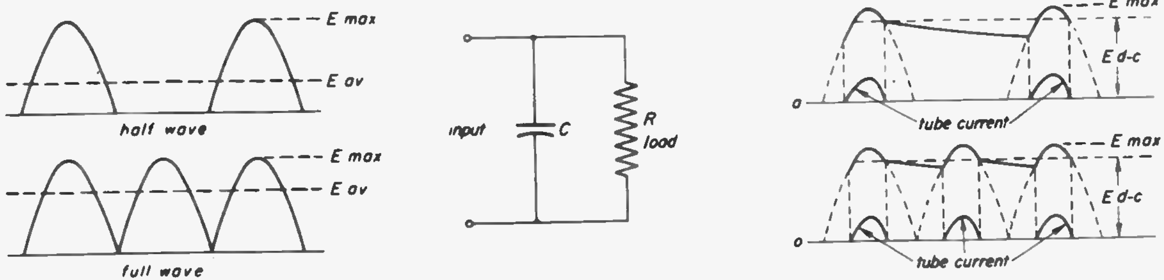

(a) Input voltage

(b) Capacitance filter

(c) Filter action output voltage

Fig. 29-12

This is fed to a capacitance filter across which is connected the resistor load, as shown in Fig. 29-12(b). During the period in which the rectifier conducts, there is very little resistance in series with the capacitor – only that of the rectifier element and the secondary winding of the transformer. Therefore, the capacitor charges rapidly to the peak voltage of the rectifier output in a few cycles. When the rectifier output drops, the capacitor can discharge only through the load resistance. The voltage across the capacitor falls off very slowly when a large capacitor is used. The capacitor acts as a reservoir, storing energy as the rectifier conducts, and releasing it slowly between conducting periods. In this way the ripple voltage is greatly reduced. In effect, the condenser is filtering out the ripple.

Fig. 29-12(c) shows the voltage output of the capacitance filter. Once the capacitor has been charged, the rectifier cannot pass current until the voltage output of the rectifier exceeds the voltage remaining across the capacitor. Current flows in the rectifier for only a short period, at the approach and shortly past the peak of the input wave. Since the capacitor absorbs energy during this pulse of rectifier current and delivers this energy to the load between pulses, the average voltage of the filtered output is a higher value than that of the unfiltered input. However, the average voltage available from the filter depends a great deal on the resistance of the load. If the load is only a small resistance value, the load will draw a heavy current. This will discharge the capacitor much faster and the average voltage will become much lower. A simple capacitor filter therefore is not satisfactory for circuits which must supply large load currents.

To prevent abrupt changes in load current, we can place an inductor, or filter choke, in series with the rectifier output, as shown in Fig. 29-13(b). Inductance in the circuit tends to prevent the current from building up or dying down rapidly. If the circuit inductance is made large enough, then the load current is held fairly constant. By filtering the rectified output with a filter choke the output voltage is not as high as when a capacitor filter is used, but the inductor filter will permit a higher current drain without a serious drop in output voltage.

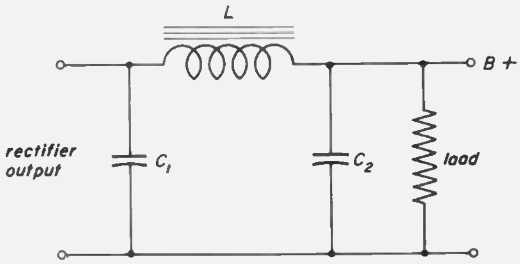

(a) capacitor input filter

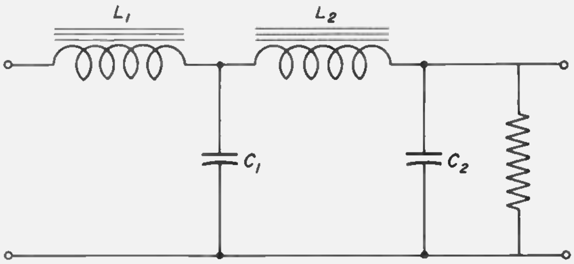

(b) choke input filter

Fig. 29-14

By using capacitors to store and release energy output from a rectifier, and inductors to keep the current from fluctuating, we have a combined filter circuit with the good features of both the capac-

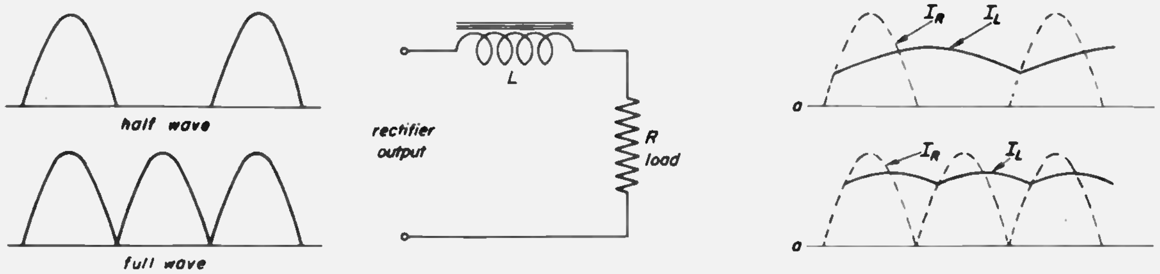

(a) Input voltage

(b) Inductance filter

(c) Output load current

Fig. 29-13

itor and the inductor filter. When the rectifier output is fed first to a capacitor, in such a combination filter as Fig. 29-14(a), the circuit is called a capacitor-input filter. If the first element in the filter circuit is a choke, we have a choke-input filter.

For either a capacitor or a choke-input filter, when there is *no load* on the output terminals, the terminal voltage is nearly equal to the peak voltage output of the rectifier. For a capacitor-input filter, as the load current is increased, the terminal voltage falls. Since the output voltage falls considerably as the load current is increased, the circuit is said to have poor voltage regulation. The capacitor-input filter is adequate for applications where the load is light or fairly constant. It is not desirable for circuits that require a large current.

For a choke-input filter, with only a small load current, the output voltage drops to some lower value than the no-load terminal voltage, but will remain at that value as the load continues to increase. An initial load or bleeder is usually placed across the output so that there is always some drain or load on the circuit. Since the voltage of a choke-input filter changes very little over a wide range of load, the circuit has good voltage regulation.

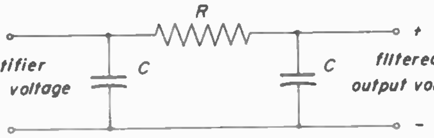

Fig. 29-15

Fig. 29-15 shows a resistance-capacitance filter circuit, which results when a resistor is substituted for the inductor. This type of filter is satisfactory in circuits where the current requirements are low. Excessive voltage drop across the resistor would result if used in a circuit in which large current drain may be encountered.

For adequate filtering it is desirable to use large values of capacitance. This requires the use of electrolytic capacitors, which give a large capacitance in a reasonably sized unit. Electrolytic capacitors are frequently made up in multiple units, so that there are two, three or more capacitors in a single case. A typical electrolytic filter capacitor is shown in Fig. 29-16.

Fig. 29-16

A typical filter circuit used in TV receivers for the low voltage power supply is shown in Fig. 29-17. Note that the focus coil is used as the choke in the second filter section. This can be done since, with suitable component values, most of the ripple is removed in the first section of the filter. Note that this is a capacitor input filter, and that the input is to two 40 mf capacitors connected in parallel to make an input capacitance of 80 mf.

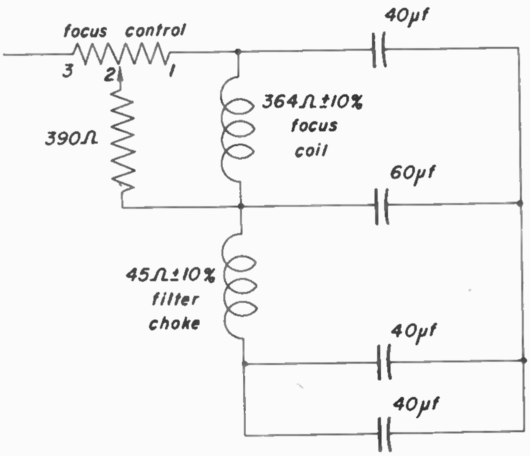

Fig. 29-17

VOLTAGE DIVIDERS

29-4. The rectifier and filter circuit furnish the direct voltages needed to supply the plate, screen and grid bias voltages for tube operation. Since these represent a considerable range in voltage values, some means must be available to obtain the different voltage values desired. This is done by connecting a resistor network across the output of the filter circuit. The simplest arrangement is a number of resistors in series, as shown in Fig. 29-18.

In Fig.29-18(a)there are four resistors connected in series across the 300 volt output of the filter circuit: 5K, 5K, 10K and 10K, with the end of the bottom resistor grounded. When no external load is connected, the voltage at each terminal can be easily determined. We have a simple voltage divider circuit, in which the voltage to ground at any point is the ratio of the resistance to ground to the total resistance, multiplied by the total voltage.

For example, the total resistance is 30K or 30,000 ohms, and the total voltage is 300 volts. Since the resistance of R4 is 10K, the voltage from its upper terminal to ground is 10K/30K x 300 volts = 100 volts. Since the lower end of the resistor is grounded, that becomes the zero reference point to which other voltage readings are referred. The voltat the top of R4, in respect to ground, is +100 volts. The voltage readings to ground from the other terminals are as indicated, +200, +250 and +300, respectively.

Besides serving as a voltage divider, these series resistors across the filter circuit act to discharge the filter capacitors when the rectifier is shut off. They also provide a minimum current load for the filter, even when no external load is connected. This minimum current load is found by Ohm's Law. It is equal to 300 volts/30K = 0.01 amperes or 10 milliamperes, in this particular case.

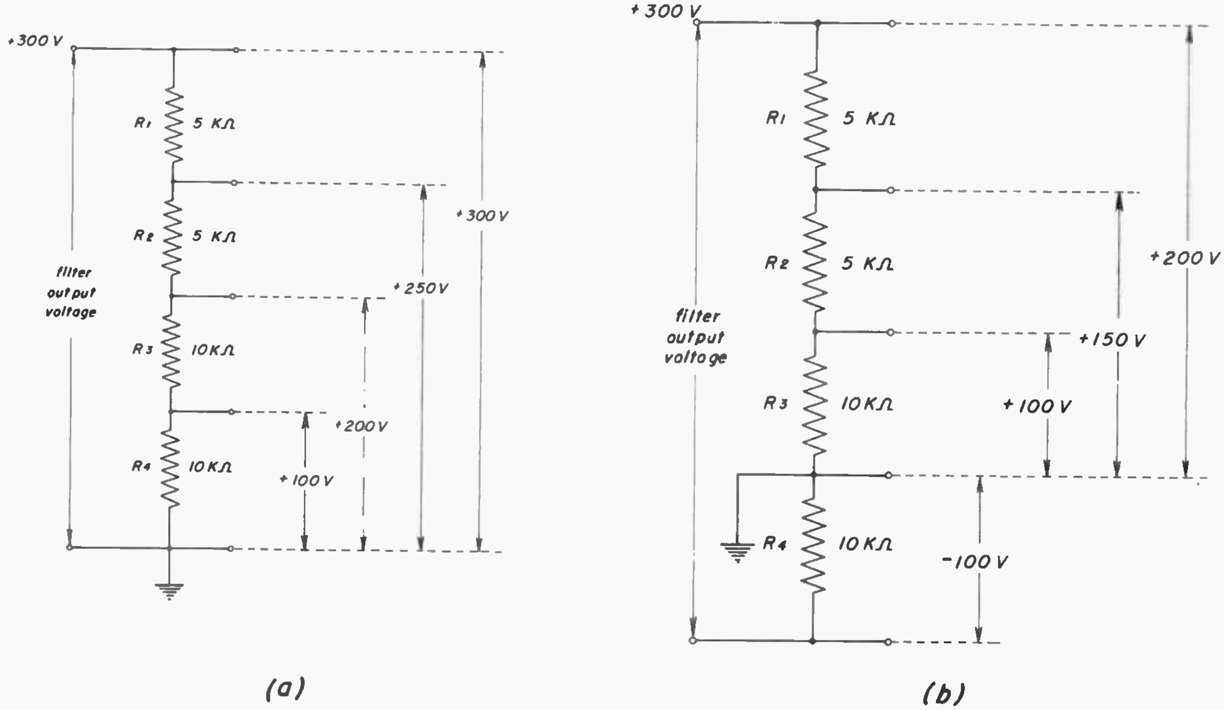

Fig. 29-18

The Ground Point. – The voltage divider, or some part of the external circuit, may be grounded without affecting the operation of the power supply, provided the rectifier and filter circuits are not directly grounded. When this is done, however, it is important that all parts of the rectifier and filter have sufficient insulation to ground to withstand the voltages involved in such a connection. In particular, the negative terminals of the electrolytic capacitors of the filter circuit (which in many capacitors is connected to the outer metal case) must be insulated from ground.

With these precautions in mind, let's change the ground connection on our voltage divider from the bottom to the upper terminal of R4 as shown in Fig. 29-18(b). This grounded terminal then becomes our reference point for voltage readings. Since the bottom terminal of R4 is at a lower potential than the grounded terminal, its reading is now -100 volts. The other terminal readings to ground are now shown to be +100 volts, +150 volts and +200 volts respectively. This arrangement supplies a negative voltage that can be used to provide the negative bias for certain circuits in the TV receiver. Of course, the maximum positive voltage available for the plate circuits is reduced in this arrangement. However, the total range of voltage is still 300 volts, 100 volts negative and 200 volts positive.

The voltage measured across the intermediate terminals of the voltage divider will divide proportionally to the value of the divider resistors only when no appreciable load is being drawn from these terminals. When an external load is applied, so that additional current passes through certain of the divider resistors and not through all of them, the relative division of voltages will change. In general, with increased current supplied to the external circuit, the terminal voltage drops. A voltage divider is designed for the particular load conditions at which it is to operate. Therefore, when measuring voltage with no load applied, you should expect high readings which would drop to normal with the load applied.

A *Typical Divider Circuit.* – Figure 29-19 shows a voltage divider network used in a typical TV receiver. The circuit is grounded at such a point that two negative and three positive voltages are available, with a total range of from -120 volts to +215 volts. The voltages given are for normal operating conditions, with the external load connected.

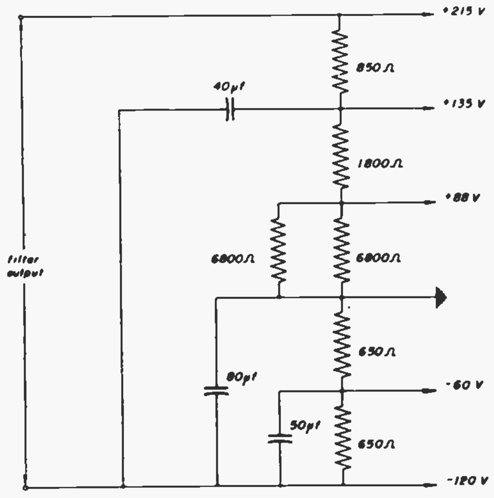

Fig. 29-19

It is important to notice that capacitors are connected from most of the divider resistors either to the most negative terminal or to ground. These serve to filter out any alternating currents from the external circuits to which the power supply is connected. If this is not done there is the danger of oscillation or motor-boating caused by the coupling of signals from one circuit back to another through the power supply connections.

Where a large bypass capacitance is needed, as in the cathode circuit of audio and certain sync circuits, it is preferable to use an electrolytic capacitor installed in the power supply section of the receiver. In r-f, i-f and video circuits, where a smaller capacitor is satisfactory for the decoupling of circuits operating at high frequencies, the decoupling circuits, usually consisting of a resistor and capacitor, are connected as close as possible to the particular circuit involved.

Also, voltage dropping resistors may be installed anywhere in the circuit where needed to bring the voltage at any element to the desired value. Examples are; screen voltage dropping resistors connected in the plate supply line to drop the voltage to the desired value at the screen; and cathode biasing resistors to obtain the bias voltage for proper operation of a particular circuit.

TYPICAL LOW VOLTAGE POWER SUPPLIES

29-5. Typical low voltage power supplies used in many TV receivers are shown in Figs. 29-20, 29-21 and 29-22.

Circuit With One Rectifier Tube. – In Fig.29-20 we put together the sections we have been describing to form the complete low voltage power supply utilizing a 5U4-G vacuum tube in a full-wave rectifier circuit.

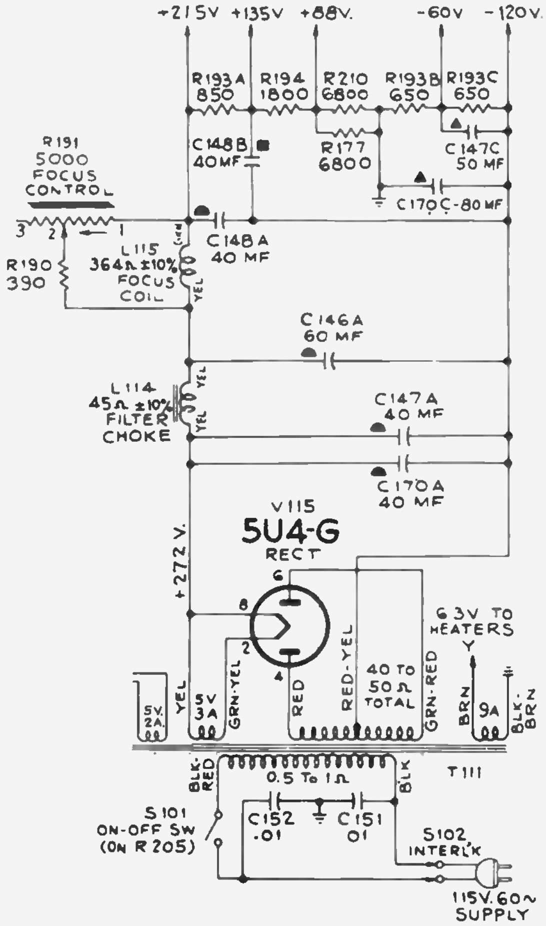

Fig. 29-20

The circuit connecting the power plug to the primary of the power transformer, in addition to the ON-OFF switch (S101) for turning on the receiver, also contains an interlock switch (S102) which makes the set inoperative when the back panel of the receiver is removed. Note the two series capacitors C151 and C152 (each .01mf) across the primary winding. With the common terminal connection between the capacitors grounded, we have capacitor filters from both terminals of the primary winding to ground. This filter circuit serves two purposes. It prevents any interfering signals from the line from entering the power supply, and it also prevents any high frequency signals from the TV receiver from entering the line and being radiated to interfere with other receivers.

Note that the power transformer has four separate secondary windings. In addition to the high voltage secondary to supply the plates of the rectifier tube, there are three filament windings. A 6.3 volt winding with a maximum rating of 9 amperes supplies heater power for receiver circuit tubes. One end of this winding is grounded, so that only one heater lead needs to connect to the heaters of the tubes on the TV chassis. *It is important to note that this is the only winding on the power transformer that is grounded.* The two other filament windings (5 volt, 3 amperes for the rectifier tube, and 5 volt, 2 amperes for the damper tube) must be well insulated from the transformer core and ground, since both carry a high voltage in respect to ground.

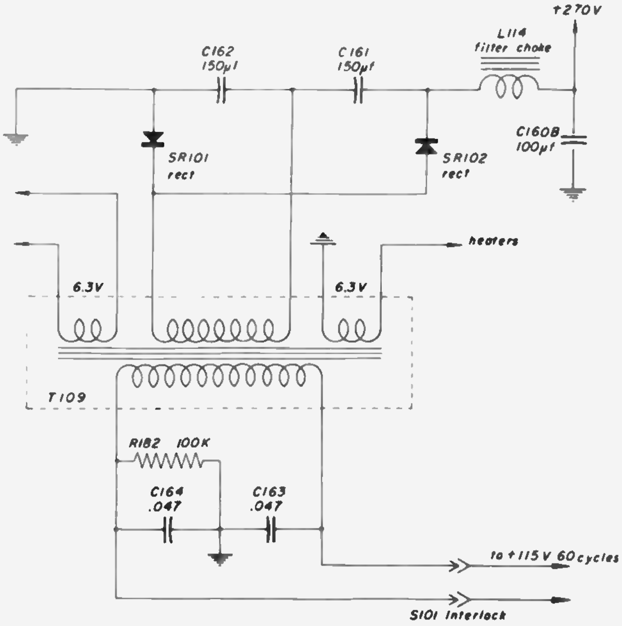

Fig. 29-21

Circuit With Selenium Rectifiers. – Fig. 29-21 shows the complete low voltage power supply for a typical full-wave selenium rectifier type used in many TV receivers. Here only three secondary windings are required, since there is no need for a rectifier heater winding. The voltage for the selenium rectifiers is supplied by a unity-coupled (not a step-up) secondary winding. By using a voltage-doubler, full-wave rectifier circuit, with large values of capacitors, the d-c output voltage becomes equal to almost twice the peak input voltage, or about 310 volts. This is calculated as 110 volts x 1.41 x 2. The current drawn by the load keeps discharging the two capacitors, however, and prevents them from charging to the peak value. The output voltage becomes 270 volts, therefore, as indicated on the diagram.

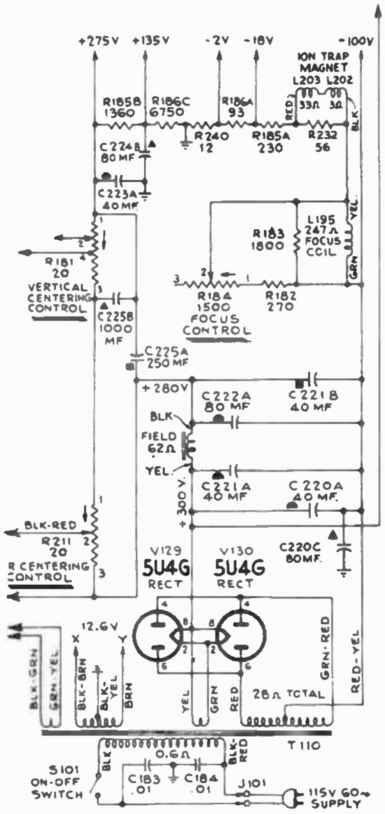

Fig. 29-22

Circuit With Parallel Rectifier Tubes. – Figure 29-22 shows a power supply circuit with two rectifier tubes connected in parallel to provide a greater current output. This particular circuit was used in early models of some receivers. However, the use of parallel rectifier tubes is still a good solution for the high current requirements in some receivers.

The circuit shown includes the horizontal and vertical centering controls, the coil of the ion trap magnet (an early type), and the focus coil as a part of the voltage divider network. Note the number of filter capacitors required.

HIGH VOLTAGE POWER SUPPLY

29-6. High Voltage Power Supply Requirements. – In general, the high voltage power supply is required to supply power for the proper operation of the kinescope. The highest voltage, of course, is that needed for the kinescope second anode. In direct view receivers, this voltage depends on the kinescope characteristics and, in general, is higher for the larger size tubes. It varies from 9,000 volts for the 10 inch tube to about 19,000 volts for the 21 inch tube. For the projection tube, the 5TP4, where exceedingly high brightness is needed, the second anode voltage is as high as 29,000 volts. Fortunately, the current requirement for this circuit is very low, only in the order of 1 milliampere.

In addition to the kinescope high voltage anode, there are other circuits in certain TV chassis that require voltages higher than those supplied by the low voltage power supply. In general, low voltage power supplies in TV receivers furnish maximum voltages from 270 volts with a selenium rectifier voltage doubler to about 400 volts from a 5U4-G full-wave rectifier. Where a higher voltage is necessary for specific circuits, as for example to operate the horizontal output tube 6BG6-G or for the focusing anode for the electrostatic focusing type kinescope, power is obtained from supplementary circuits which may be considered as part of the high voltage power supply. These supplementary circuits are the B supply boost, required for the horizontal output tube, and an additional rectifier and voltage divider circuit, required for proper operation of the focusing anode in electrostatic focus tubes. Current requirements for these circuits are extremely low.

It is not practical to attempt to obtain the high voltage needed for the kinescope directly from the 60 cycle power supply. There would be too much waste of power, and too much danger of electric shock if something went wrong. Instead, the energy available in the horizontal scanning circuits during the flyback time can be used to provide for all high voltage power supply needs.

The Kick-Back or Fly-Back High Voltage Supply. – The operation of this system depends on the sharp change in scanning current for the horizontal retrace that occurs in an inductive circuit used for horizontal scanning. The kick-back high voltage supply, therefore, is closely associated with the horizontal deflection circuit providing magnetic deflection, and obtains its energy directly from that circuit.

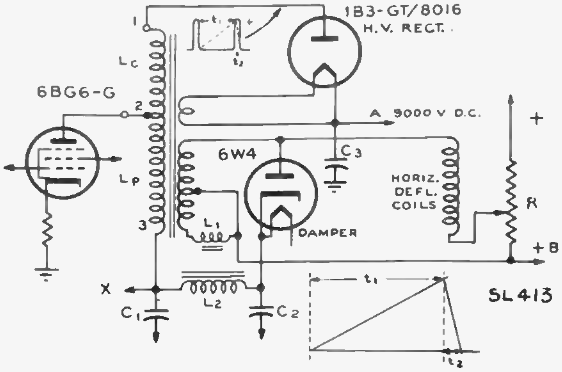

Fig. 29-23

Figure 29-23 shows a simplified diagram of the horizontal output and deflection circuits and associated high voltage power supply. In Fig.29-24 are shown the voltage waveforms of the horizontal amplifier output and the current waveform through the deflection circuit.

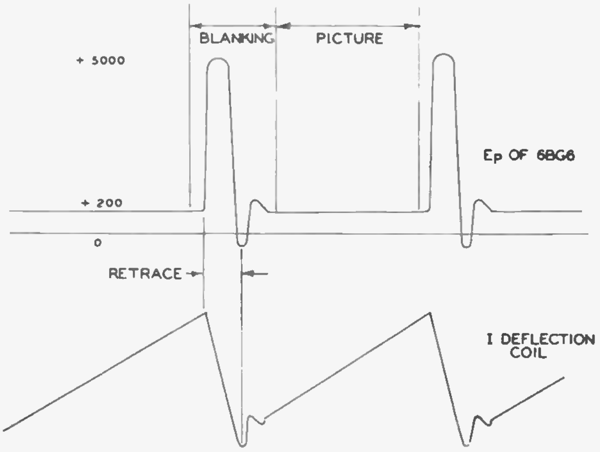

Fig. 29-24

During the period in which the horizontal output tube conducts, the linearly increasing scanning current builds up in the deflection circuit. At the peak of the sawtooth current waveform, the output tube ceases to conduct and the current in the deflection circuit decreases rapidly. During the build-up period the magnetic field in the inductive circuit expands slowly, but it collapses suddenly as the current decreases rapidly during the retrace time. It is this sudden collapse of the magnetic field in an inductive circuit that induces a kick-back voltage in coil L_p in the plate circuit of the horizontal output tube, resulting in a voltage pulse of about 5000 volts.

Actually what happens is that the coil L_p, which forms a resonant circuit with its distributed capacitance at a frequency of about 100 kc, is shock-excited. However, the oscillations are stopped or damped by the conducting action of the damper tube during the negative half-cycle. A complete explanation of the operation of this circuit is given later in the lesson on deflection circuits.

The 5000 volt pulse occurs for only a brief instant, a few microseconds, at a repetition rate of 15,750 cycles per second. It must be stepped up to a value high enough for kinescope operation and be rectified and filtered to provide a reasonably steady direct voltage. The voltage is stepped up by an autotransformer; it is rectified by the 1B3-GT high voltage rectifier tube, and is filtered by a capacitor-resistor circuit.

The Horizontal Output Transformer. – This transformer serves as the high voltage power transformer, obtaining its power from the horizontal output and deflection circuits. The horizontal output function of the transformer is performed by the lower part of the primary winding, shown as L_p in Fig.29-23, and a secondary winding which provides the scanning currents for the deflection circuits. The high voltage power transformer function is performed by the extension of the primary winding, shown as L_c, to form an autotransformer providing the stepped up voltage for the 1B3-GT rectifier, and a secondary filament winding to heat the rectifier filament. The 6W4 damper tube shown is an essential part of the deflection circuit, but it obtains its filament supply from the low voltage power transformer.

The 1B3-GT High Voltage Rectifier. – This tube is used in a half-wave rectifier circuit for the high voltage supply. Depending upon the step-up ratio of the autotransformer, the rectifier output voltage may be any desired value from 9,000 volts to operate a 12 inch kinescope up to about 15,000 volts for a 19 inch tube. The filament of the rectifier tube is heated by high frequency current (15,750 cps) in the filament winding of the high voltage transformer. The energy is designed to be the equivalent of 1.25 volts, 0.2 amperes of direct current. Since the high voltage output of 9000 volts or more is taken from the filament of the rectifier, it is essential that the filament winding be well insulated from the transformer core and ground. It must be able to withstand the maximum peak inverse plate voltage resulting from the stepped-up voltage pulses from the autotransformer.

The a-c high voltage at the plate cap of the 1B3-GT is dangerous. An arc to the cap can be produced by bringing your hand too close - so be careful when working in this circuit.

The output of the 1B3-GT is a high d-c voltage. The d-c output voltage is taken from the filament. A filter condenser is located at this point, which is charged to 9,000 volts, or higher. When it is necessary to work in the vicinity of this condenser it should be discharged. The safe way to discharge the condenser is to connect a screwdriver blade or jumper wire *first* to ground and then to the condenser terminal.

The danger of fatal shock is greatly reduced by the fact that these circuits, operating at a high frequency, need only small filter capacitances and, therefore, a high electrical charge is not built up. The filter circuit comprises a filter capacitor located in the high voltage compartment, a resistor in series with the high voltage lead (in some receiver models), and a capacitance in the kinescope formed by the inner and outer conductive coating on the bell of the glass tube. The filter capacitor has a capacitance of about 500 uuf, and must have a voltage rating above the highest voltage attained in the circuit. The series resistor, where used, is usually one megohm.

In glass kinescopes, it is essential that the outer conductive coating on the tube make good contact with ground to utilize the filter action of the capacitance formed with the inner conductive coating of the tube. In metal kinescopes, however, the entire metal bell is at the high voltage potential, and it is essential that no part of the metal bell touch, or even come close to touching the chassis.

Since the high voltage power supply filter circuit is made up of small values of capacitance and high values of resistance, it is to be expected that the voltage regulation will be poor. An appreciable change in current drawn from the circuit will result in a large change in voltage. However, since the current requirement of the kinescope second anode circuit is so small (only about one milliampere), the voltage regulation of the high voltage power supply is adequate for its purpose. But care must be taken to prevent conditions that could lead to leakage, corona discharge or damage to the filter resistor. Any such conditions would result in reduced voltage and noisy operation of the kinescope.

VOLTAGE MULTIPLIER CIRCUITS

29-7. The kick-back type of high voltage power supply can provide voltages of about 8,000 to 15,000 volts, which is sufficient for the proper operation of even the larger direct-view tubes. However, higher voltages up to 29,000 volts are required for projection tubes. To obtain such higher voltages, a voltage multiplier type of circuit is needed. A voltage doubler or a voltage tripler circuit could be used. A voltage tripler circuit is used in most projection receivers.

Basic Principles of Voltage Multipliers. – The principle of voltage multiplication is important in any application where the voltage requirement is greater than the amount available. Of course, we can obtain a higher voltage by the use of a step-up transformer. But, there are cases where it is not advisable to use a step-up transformer. We have already noted the need to limit the voltage applied to a selenium rectifier in order to keep the current through the rectifier at a safe value. A unity ratio transformer is used in that case to couple the line voltage to the rectifiers, and the required increase in voltage is obtained by voltage doubler action in capacitor circuits following the rectifiers. Vacuum tubes are capable of withstanding much higher voltages than the selenium rectifier; but they, too, have their limitations. Since they cannot withstand the high voltages required in the high voltage power supply for the projection type receiver here, too, it is necessary to limit the voltage applied to the tube and use a voltage multiplier circuit to reach the required value.

Let us return to the selenium rectifier circuit in Fig.29-25(a) for a more detailed examination of voltage multiplier action. Each of the two rectifiers, SR-1 and SR-2, acts as a half-wave rectifier, each charging up a separate capacitor. The voltage multiplier action consists merely in connecting the two capacitors in series so that their voltages add.

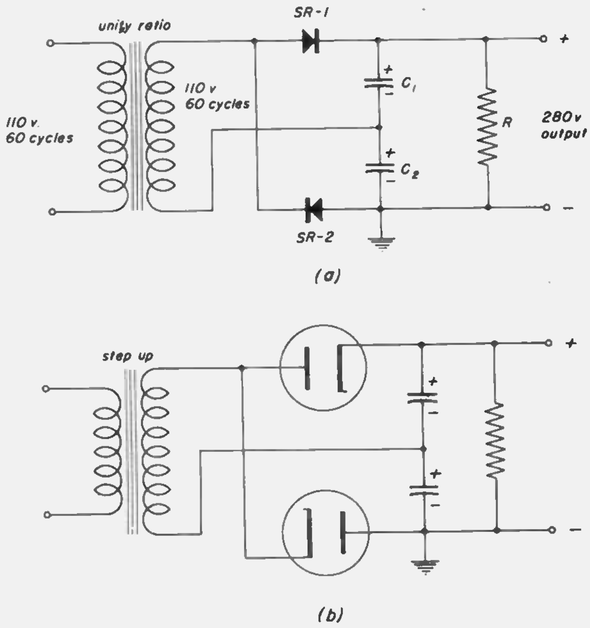

Fig. 29-25

In the case of the selenium rectifier circuit we start with the 110 volt, 60 cycle line. This is a sine wave input. A unity ratio transformer is used to obtain a 110 volt, 60 cycle input to the rectifiers, isolated from the power line. When SR-1 conducts, capacitor C1 charges to the peak value of the input half-cycle; and when SR-2 conducts, capacitor C2 is similarly charged. The peak value of a sine wave is approximately 1.4 times the rms voltage. Since the 110 volt input is the rms value of a sine wave voltage, the charge on each of the capacitors (C1 and C2) will reach a maximum of 1.4 × 110 = 154 volts. Since the capacitors are connected in series so that their voltages add, the total voltage across both capacitors is 2 × 154 = 308 volts. This is the maximum voltage reached. However, we know that any load placed across the capacitors will cause that voltage to drop. Therefore, when we place the load resistor, R, across the output terminals, we have available a filtered direct voltage output of approximately 280 volts from a 110 volt, 60 cycle input. This is sufficient for normal low-voltage power supply needs.

We can connect two vacuum-tube rectifiers in a similar circuit, as shown in Fig.29-25(b). Since these tubes can withstand a much higher inverse peak voltage than the selenium rectifier, we can use a step-up transformer to boost the available input voltage to the highest practical value. If we use the 110 volt 60 cycle line as the input voltage, an extremely high step-up ratio is needed to approach anywhere near the 9,000 to 10,000 volts reached by the kick-back power supply autotransformer. The 1B3-GT rectifier tube used in our modern receivers could stand this voltage; but, there would be trouble with a powertransformer operating at such a high step-up ratio. The circuit would be inefficient and dangerous. In cathode ray oscilloscope applications, where the high-voltage requirements are usually much less than in the television receiver, power transformers are used for step-up of the line voltage.

Voltage Multiplier Type of High Voltage Power Supply. – In projection receivers, the required maximum voltage of 29,000 volts is higher than that available from the normal kick-back type high voltage power supply. But, we can reach the required voltage by applying the kick-back voltage to a voltage multiplier circuit.

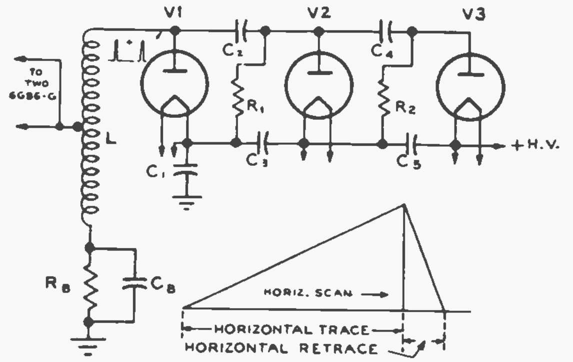

Fig. 29-26

Since the kick-back voltage is not a sine wave, but a positive pulse occurring at a repetition rate of 15,750 times per second, we cannot use the full-wave type circuit previously described. What is used is a half-wave, cascade type of voltage multiplier circuit, shown in Fig. 29-26. Here, three 1B3-GT rectifiers are used to form a voltage tripler circuit.

The first rectifier, V1, acts in the same manner as the simple kick-back circuit. The kick-back positive voltage pulse causes the tube to conduct, charging capacitor C_1 which connects from filament to ground. Capacitor C_1 is charged to the peak value of the applied voltage, about 9000 volts. During the period between pulses, when V1 does not conduct, C_1 starts discharging and charges C_2, since the discharge path for C_1 is through R_B, L, C_2 and R_1. Since the capacitors C_1 and C_2 are of equal value (500 mmf) the charge on both will become equal at a value of one-half the peak of the input voltage. At each pulse of the applied voltage, as V1 conducts, C_1 replenishes its charge; during the non-conducting period C_1 leaks off part of that charge to charge C_2 further. After a few pulses both capacitors are charged to the peak of the input voltage.

The second rectifier tube V2 is connected so that the sum of the charge on C_2 plus the applied voltage is applied to its plate. This sum equals twice the peak input voltage or 2×9,000=18,000 volts. As V2 conducts during the pulse period, capacitor C_3 charges. If C_3 were connected from filament to ground, then it would charge to twice the peak voltage. Being connected as shown, though, C_3 charges only to the peak value, requiring less of a voltage breakdown rating for C_3. Since C_1 and C_3 are connected in series, the voltage across the combination becomes twice the peak voltage of the input pulse. By taking the high voltage output from the filament of V2, we have a half-wave voltage doubler circuit with an output voltage of 18,000 volts. Some receivers use this type of voltage doubler as the high voltage supply.

In a projection receiver, the doubled voltage may still not be high enough. An additional rectifier tube V3 must be added in a circuit similar to that of V2, to form a voltage tripler circuit. This is shown in Fig. 29-26. Capacitors C_4 and C_5 each charge up to voltages approximately equal to the peak input. C_4 becomes charged due to the discharge of C_3; C_5 becomes charged by the conduction of V3. Taking our output from the filament of V3, the voltage output is that across three fully charged capacitors in series, $C_1 + C_3 + C_5$, giving a total of 27,000 volts.

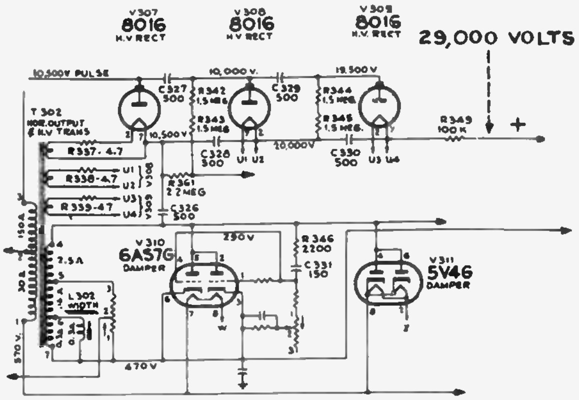

Fig. 29-27

A voltage tripler circuit, as used in a typical TV projection receiver, is shown in Figure 29-27. The required output voltage of 29,000 volts is obtained from an input positive pulse of 10,500 volts. The output voltage is slightly lower than three times the input because of the voltage drop in the resistors in the circuit. These, of course, are essential for adequate filtering. Since the filaments of the three rectifier tubes are at different potentials, each tube must have a separate filament winding on the high voltage transformer. These windings must be well insulated from the core and from ground.

SUPPLEMENTARY CIRCUITS IN THE HIGH VOLTAGE POWER SUPPLY

29-8. We have previously mentioned the need in certain specific circuits for higher voltages than those supplied by the low voltage power supply, but much lower in value than the high voltage power supply output. Of course, it is possible to connect a voltage divider across the high voltage output, and obtain any desired voltage value through the voltage drop across suitable values of resistance. However, this would require the use of extremely high values of resistance, complicate the problem of voltage regulation, and present an added hazard of damage or injury from high voltage. It is much more practical to add supplementary circuits to provide for these specific needs. These are the B supply boost, required for the proper operation of the horizontal output tube, and an additional rectifier and voltage divider circuit to provide the proper voltage for the focusing anode in electrostatic focus tubes. Since the current requirements for these circuits are extremely small, the power can be obtained from the horizontal deflection circuit.

The B Supply Boost. – This circuit provides a voltage a little higher than the regular low voltage power supply. The horizontal output tube, 6BG6-G, requires this higher voltage, or boosted B+. The higher voltage is provided by the action of the damper tube as part of the horizontal deflection circuit.

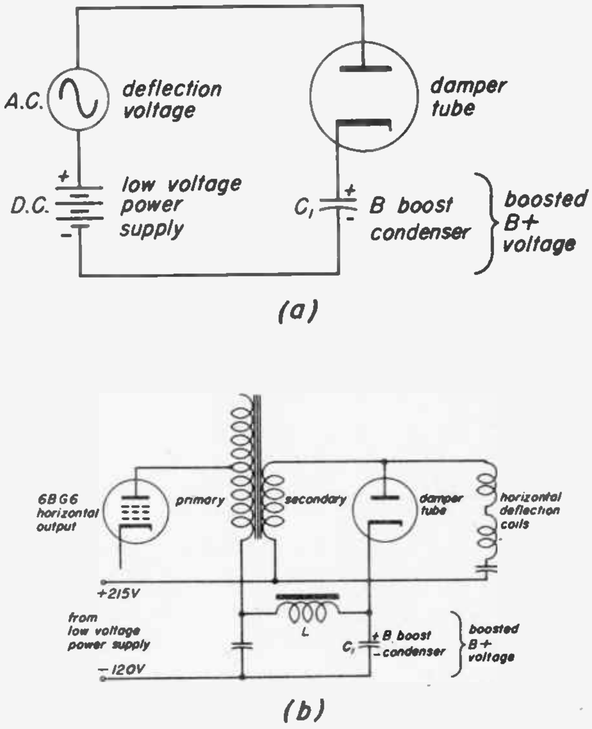

(a)

(b)

Fig. 29-28

In Fig. 29-28 (a) we see an a-c voltage in series with a d-c voltage. The sum of these two voltages is applied to a diode. When the a-c voltage is zero, the sum is only the d-c voltage alone. This makes the diode plate positive and the tube conducts, charging up the condenser C_1.

When the a-c voltage adds to the d-c voltage, the sum is now larger. This will cause C1 to become charged to approximately the sum voltage. The result is that C1 is charged to a voltage larger than the d-c voltage alone.

In Fig. 29-28(b) we see a simplified schematic of the B boost circuit. The d-c voltage is from the low voltage power supply, which is a total of 335 volts (going from +215 volts, in respect to ground, to -120 volts). The damper tube will conduct and charge C_1 to this value of 335 volts. The top of C_1 will be +215 volts, with respect to ground, and the bottom of C_1 will be at −120 volts.

With no deflection voltage (the a-c component) present, the damper tube would stop conducting once C_1 became charged up fully to the d-c voltage. When the deflection voltage appears across the secondary of the transformer, this a-c voltage adds to the d-c voltage applied to the diode plate. On the portion of the a-c deflection voltage cycle when the top of the secondary goes positive, the voltage applied to the diode plate is now larger. The damper tube will now conduct, and the increased voltage charges up C_1 to this higher value.

In actual operation, C_1 charges to 442 volts, from a previous charge of 335 volts. This is an addition of 107 volts. The top of C_1 now becomes +322 volts in respect to ground, from its former value of only +215 volts.

The plate of the 6BG6-G horizontal output stage, which requires this boosted B+ voltage, is connected to the positive side of C_1 through the inductance L, as shown here:

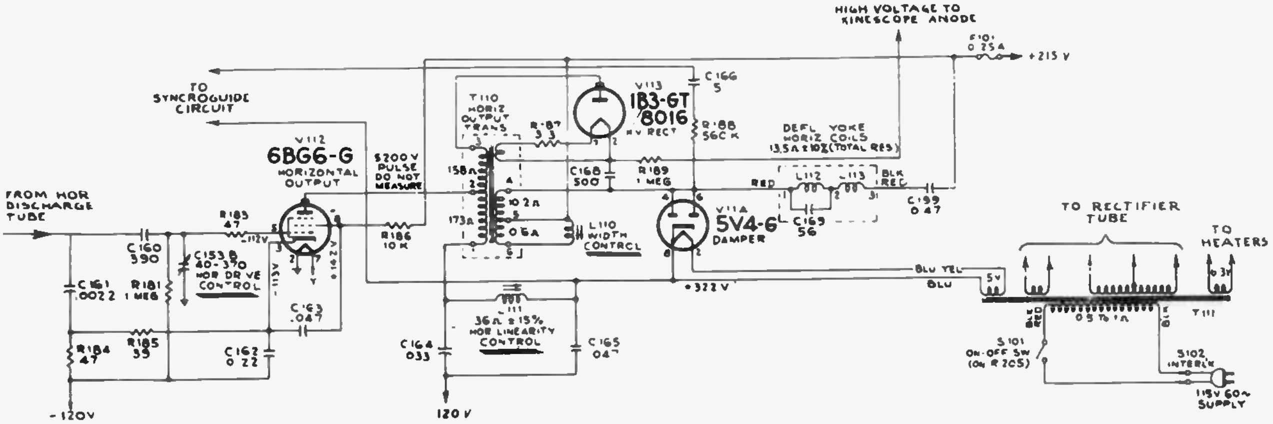

Fig. 29-29

In this diagram we see the B boost circuit as it actually is without simplification. The B boost condenser is C165 and the damper tube is the 5V4-G. Also shown as part of the horizontal deflection circuit is the high voltage rectifier 1B3-GT, but this is not part of the B boost circuit.

The Modification for Electrostatic Focus. – Receivers with electrostatic focus tubes generally use an additional rectifying circuit, shown in Fig.29-30. In this modification of the usual high voltage power supply, a separate filament winding is added to the high-voltage power transformer to operate a 1V2 rectifier tube. The power source is the 5000 volt pulse output of the horizontal output circuit. This 5000 volt pulse, without benefit of the autotransformer winding step-up, is applied to the plate of the 1V2 rectifier tube. The rectified output, taken from the filament of the 1V2, is filtered and applied to the kinescope focusing anode through a voltage divider circuit. Adjustment of the focusing voltage is done by including a 25 megohm potentiometer in the voltage divider, with connection to the focusing anode made from the movable arm.

While this supplementary rectifier provides a much lower voltage than that of the normal high voltage rectifier, the 4220 volts output is still high enough to warrant careful handling. As is the case

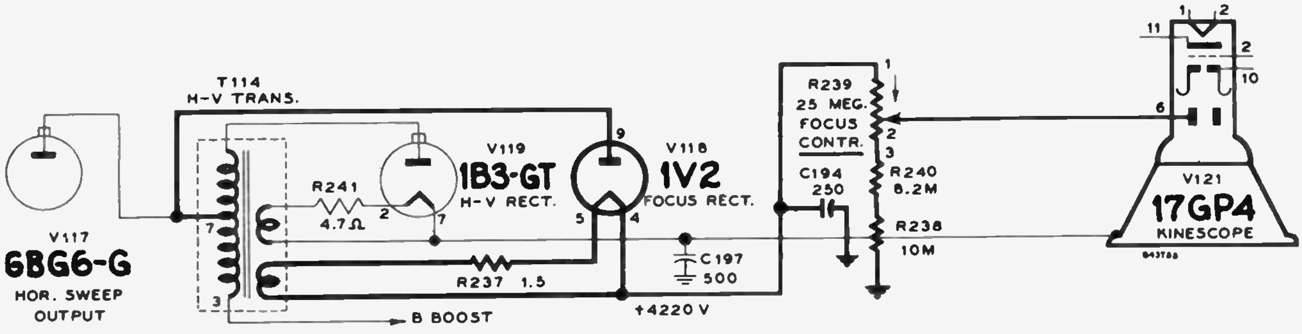

Fig. 29-30

for the high voltage rectifier, the danger of serious shock is lessened by the high resistance and low capacitance in the circuit.

R-f POWER SUPPLY

29-9. Some receivers employ a high voltage supply that gets its power from a separate r-f oscillator, instead of the horizontal deflection circuit. A typical circuit is shown here.

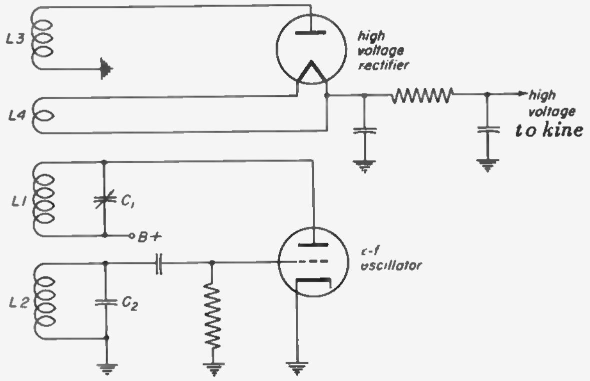

Fig. 29-31

The r-f oscillator is a tuned-plate type using inductive feedback to sustain oscillations. The frequency of the circuit is determined mainly by the plate and grid tanks, L_1 C_1 and L_2 C_2. Feedback occurs through the magnetic coupling between L_1 and L_2.

The other coils L_3 and L_4 are also magnetically coupled to L_1. The voltage induced in L_4 is used for the filament of the high voltage rectifier tube. L_3 is a voltage step-up secondary winding. The high voltage induced in L_3 is rectified by the tube and then filtered to produce the d-c high voltage needed for the picture tube anode.

The amount of high voltage can be changed by adjusting C_1 which varies the frequency and amplitude of the oscillations. The amplitude of these oscillations determines the amount of voltage induced in L_3, and also the resulting d-c high voltage output.

Some circuits use capacitive instead of inductive coupling to sustain oscillations. This eliminates the need for one of the transformer windings, L_2. A coil spring is often wrapped around the tube to provide capacitive coupling between the oscillator plate and grid circuit.

The r-f power supply must be well shielded to prevent radiation to other stages of the receiver. This radiation could cause interference in the sound and picture.

SERIES PARALLEL FILAMENTS

29-10. Receivers that use a transformerless power supply have their filaments in a series-parallel arrangement, as shown in Fig. 29-32.

Note that all the tube filaments in the top string are in series with each other, and all those in the bottom string are in series. Each complete string is in parallel with the other. The filaments of the three tubes at the right, (6J6, 7JP4, and 6X5) requiring a greater current than

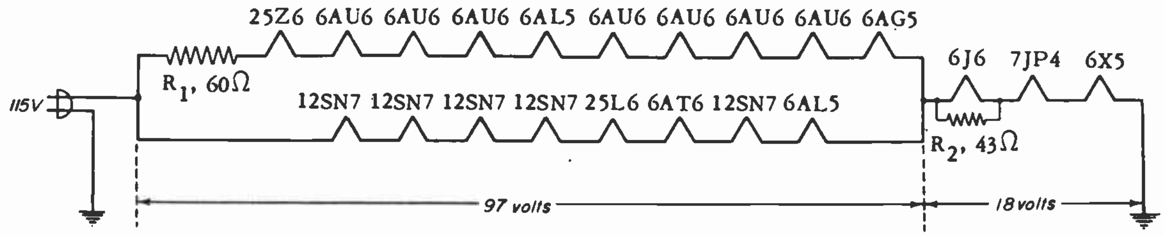

Fig. 29-32

the filaments in either string, are in series with the parallel combination of both strings. The current through the individual strings combine to form a greater current, which then flows through the three series filaments at the right.

In this type of receiver an open filament in a tube which is part of a string will prevent filament current from flowing through the rest of the tubes in that string. This will also reduce the current that flows through the three series filaments. As a result, all the tubes in the string become inoperative, and the three series tubes operate very weakly, if at all. If one of the three series filaments opens, it will stop current flow through each string, and every tube in the receiver would become inoperative.

The tubes in a series circuit must require the same filament current, or else be shunted with a resistor. The tubes in the top string (25Z6, 6AU6, 6AL5, 6AG5) all require 0.3 amp. for their filaments, and so are placed in series with one another. The tubes in the bottom string (12SN7, 25L6, 6AT6, 6AL5) also require the same filament current of 0.3 amp., and are placed in series with one another.

The voltage required for all the top string filaments amounts to approximately 79 volts; that across all the lower string filaments, 97 volts. Since the two strings are in parallel, the voltages must be equal. Resistor R_1 is placed in the top string to give the additional voltage drop required to equalize the two voltages.

The sum of the currents in the two filament strings (0.6 amp.) will flow through the series filaments. Two of these filaments, the 7JP4 and the 6X5, require 0.6 amp., but the 6J6 only needs 0.45 amp. Resistor R_2 shunts the 6J6 filament so that only 0.45 amp. flows through the filament and 0.15 amp. flows around it through R_2.

◆

NOTES

NOTES

NOTES

NOTES

TELEVISION SERVICING COURSE

PREPARED BY

RCA INSTITUTES, INC.
A SERVICE OF RADIO CORPORATION OF AMERICA

HOME STUDY DEPARTMENT
350 West 4th St., New York 14, N. Y.

LESSON THIRTY

TROUBLESHOOTING THE LOW VOLTAGE POWER SUPPLY

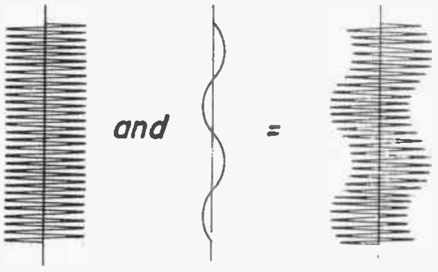

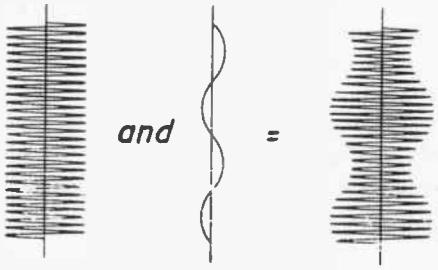

Lesson 30

In this lesson troubles in the low voltage power supply will be discussed. Troubles that occur in the high voltage supply will be explained with horizontal deflection circuits in a later lesson.

LOCALIZING TROUBLES TO THE LOW VOLTAGE SUPPLY

30-1. When more than one trouble symptom shows up, the low voltage power supply should be suspected. The two reliable indications of trouble in the low voltage supply are:

a. No sound and no brightness.
b. A picture shrunk in size, both vertically and horizontally.

In each of these cases the receiver has, *at the same time*, failed to perform *two* of its normal functions. The power supply circuit is the only *single* circuit in the receiver that can produce a loss of both sound and brightness at the same time, or affect both the horizontal and vertical size of the raster.

No Sound and No Brightness. This condition will occur if there is no B plus voltage output from the rectifier, no a-c input from the 110-volt line, or a failure of the filament supply. These possibilities can be checked without removing the chassis. If *any* of the filaments are lit, there must be a-c input. If *none* of the filaments are lit, the trouble probably is no a-c input, since most receivers have more than one filament circuit and it is unlikely that all these circuits would fail at the same time. If *some* of the filaments are lit, the lack of sound and brightness may be due to a failure in the string of unlit filaments, even though the B plus voltage is normal. If *all* of the filaments are lit, however, no sound or brightness indicates that there is no B plus output.

Small Raster. A raster small in the horizontal and vertical directions at the same time indicates a low d-c output voltage from the power supply. The smaller raster is caused by smaller deflection signals from both the horizontal and vertical circuits. A decreased B plus voltage, which is used by both deflection circuits, can cause this condition. The rectifier tube is often the cause of a low B plus voltage.

If the B plus voltage has not dropped too low, it is often possible to restore the raster to its full size by adjusting the height and width controls. Sometimes the height of the raster can be restored by this adjustment, but not its width.

Many low voltage power supplies have different outputs on a tapped voltage divider, with either all positive, or positive and negative, voltages. Individual voltages may change in these circuits, causing trouble, but the *total* voltage, from maximum positive to maximum negative, *need not* be affected. Since the deflection stages are usually connected across the total voltage, the raster size will not be affected even though individual voltages may have changed. The trouble symptom of a small raster, therefore, is produced by a low value of the *total output voltage* supplied to the deflection circuits, as might be caused by a weak rectifier.

Incorrect Voltage Divider Output. When one of the voltages tapped off the bleeder changes, the symptoms that appear depend on which circuits use that voltage. Usually more than one symptom appears, such as distorted sound accompanied by distorted picture.

The voltage divider resistors divide the total voltage into smaller values, each of which is fed to one or more stages of the receiver. The value of any one of these voltages depends on the value of the resistor, the current through it, and the total voltage across all of the resistors. These voltages may all be of the same polarity in respect to the chassis ground, or some may be positive and

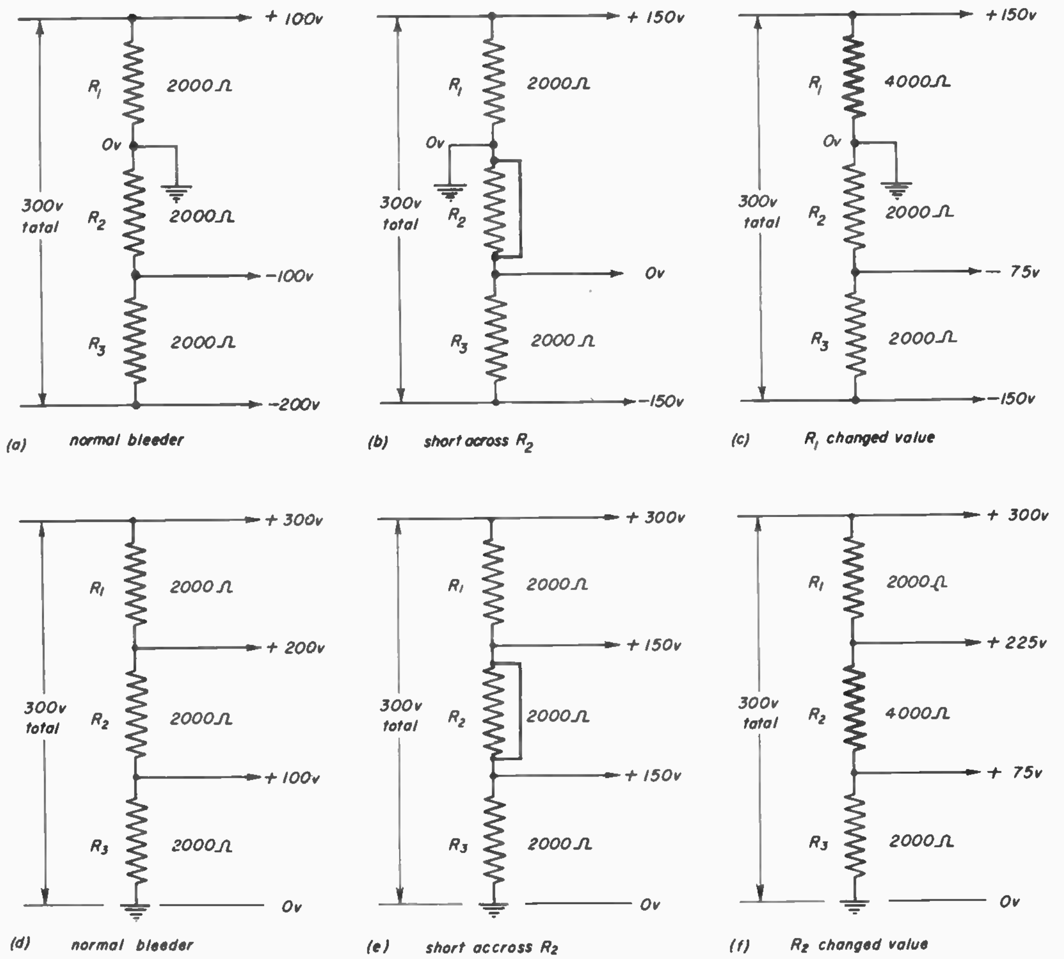

(a) normal bleeder (b) short across R_2 (c) R_1 changed value

(d) normal bleeder (e) short accross R_2 (f) R_2 changed value

Fig. 30-1

some negative. The polarity depends on the direction of current flow and the point at which the voltage divider is connected to ground.

In Fig. 30-1 *a* we see a bleeder circuit producing positive and negative voltages, while in Fig. 30-1 *d* only positive output is produced. In Fig. 30-1 *a* through *f*, the direction of electron flow or current due to the rectifier is assumed to be upward, or from the bottom to the top.

In Fig. 30-1 *a* we see the normal bleeder circuit. If the total voltage developed is 300 volts, and R_1, R_2 and R_3 are equal— in this example, 2000 ohms each — 100 volts will be developed across each. Since the junction of R_1 and R_2 is grounded, that point is at zero volts. The top of R_1 is its high potential side, and will be +100 volts. The bottom of R_2 will be -100 volts. The bottom of R_3 is 100 volts lower than the junction of R_2 and R_3 (-100 volts), and thus will be -200 volts. These voltages are all with respect to the ground point.

Fig. 30-1 *b* and *c* illustrate how the voltages will change if one of the resistors changes value. Fig. 30-1 *b* shows the output voltages when the bottom of R_2 is shorted to ground. Now, only R_1 and R_3 are in the bleeder circuit. Since R_1 and R_3 are of equal size, one-half of the total voltage of 300 volts, or 150 volts, will appear across each. The bottom of R_1 and the top of R_3 are at zero volts. The other ends of R_1 and R_3 will each have a potential of 150 volts from ground — the high end of R_1 at +150 volts and the low end of R_3 at -150 volts.

Fig. 30-1 *c* shows how the output voltages could change from their normal value due to an increase of resistance. It is important to note that an increased bleeder resistance on one side of ground can cause a lower voltage on the other side of the ground point, producing an abnormally low voltage, as in the case of a short. If R_1 is increased from its former 2,000-ohm size to 4,000 ohms, the voltage division will be as shown in Fig. 30-1*c*. The bleeder circuit now consists of one 4,000-ohm resistor (R_1) and two 2,000-ohm resistors (R_2 and R_3). The total voltage, 300 volts appears across a total resistance of 8,000 ohms, or 37.5 volts across each 1,000 ohms of resistance. R_1, which is 4,000 ohms, will have 150 volts across it, with the top end at +150 volts since its lower end is at ground potential. R_2, which is 2,000 ohms, will have one-half the voltage of R_1, or 75 volts, across it. Since the top of R_2 is grounded, the bottom will be 75 volts below ground, or -75 volts. R_3 will also have 75 volts across it, with its bottom end at -150 volts with respect to ground.

From the foregoing discussion and illustrations, we can make the following statement. In a power supply producing both positive and negative voltages and in which the total voltage remains the same, then:

a. If the *B plus increases* or the *B minus decreases*, either a resistance on the positive side of the bleeder has increased, or a resistance on the negative side has decreased. Decreased resistance may result from a short circuit or partial short.

b. If the reverse occurs, with *B plus decreasing*, the opposite must have taken place — a short or partial short on the positive side, or an increased resistance on the negative side.

Fig. 30-1*d* shows a voltage divider with ground at the bottom, producing all positive voltages. With a total voltage of 300 volts and three equal resistors, each resistor will have 100 volts across it. Assuming as before that electrons are flowing upward, the top of R_3 would be at +100 volts; the top of R_2 would be 100 volts higher, or +200 volts; and the top of R_1 would be another 100 volts higher, or +300 volts.

In Fig. 30-1*e*, the same divider is shown with one section shorted, leaving only R_1 and R_3 in the circuit. Since these two resistors are of equal value, the applied 300 volts will divide equally between them, giving 150 volts across each. The bottom of R_3 is at 0 volts; the top of R_3 and the bottom of R_1 are at 150 volts, and the top of R_1 is at 300 volts.

In Fig. 30-1*f* the voltages are again different, since R_2 has been increased to 4,000 ohms. The total voltage of 300 volts again appears across a total resistance of 8,000 ohms, and again produces 37.5 volts across each 1,000 ohms. R_3, which is 2,000 ohms, will have 75 volts across it; its top end being +75 volts, since its lower end is grounded. R_2, which is 4,000 ohms, will have 4 x 37.5 or 150 volts across it, making its top end +225 volts with respect to ground. R_1, which is 2,000 ohms, will also have 75 volts across it, making its high end +300 volts with respect to ground. From Fig. 30-1 *d*, *e* and *f*, we can state these conclusions: in a power supply producing positive voltages only, and in which the total voltage remains the same:

a. If a voltage tapped off the bleeder has *increased*, either a resistor between this voltage point and ground has increased, or a short or partial short has occurred between this voltage point and B plus.

b. If a voltage tapped off the bleeder has *decreased*, either a short or partial short between that voltage point and ground has occurred, or a resistance between that voltage point and B plus has increased.

Note that these conclusions (a and b) are the reverse of each other.

All the foregoing examples assume that the total voltage across all the resistors remained constant at 300 volts (usually a correct assumption) — while the individual "tapped-off" voltages changed. In Fig. 30-1*a* the tapped-off voltages range from -200 to +100 volts; in *b* and *c* from -150 to +150 volts. In each case, however, the total voltage across all the resistors remained at 300 volts.

The effect of incorrect voltage division in a receiver's operation depends upon which stages are connected to the changed voltages. This, of course, varies in different receivers. Since it is not generally possible to associate specific symptoms with abnormal voltages at the individual taps, many technicians make it a practice to measure these voltages as a routine check whenever a faulty chassis is removed from its cabinet.

As an example of the effect of abnormal voltage distribution in a receiver, let us consider the voltage divider of a TV chassis as shown in Fig. 30-2, having a total voltage across it of 375 volts. Assume the maximum negative voltage of -100 volts is shorted to ground.

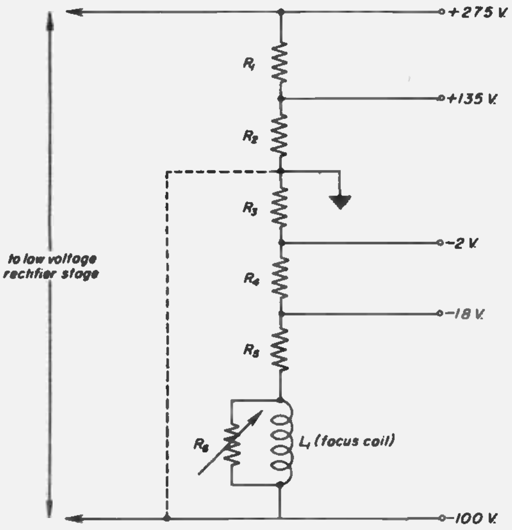

Fig. 30-2

This short will reduce all negative voltages to zero. The negative voltages in this receiver are used as follows: -18 volts for the grid of the audio-output stage, -100 volts bias for the kinescope; -2 and -18 volts bias for picture i-f and video amplifiers, and for the sync separator and sync amplifier.

With the -100 volt point grounded in Fig. 30-2, no rectified current can flow through R_6, L_1, R_5, R_4 or R_3. The current, short-circuited via the dotted line, continues through R_2 and R_1. The total voltage is now developed across R_1 and R_2 alone, instead of across all the resistors. The total voltage was 375 volts, from -100 to +275 volts. With the -100 volts no longer present, and the total voltage remaining the same, the positive voltage at the top of R_1 now becomes +375 volts. Circuits such as the deflection amplifier stages can operate in spite of such a short, since they use the -100 volts only as a return connection, to obtain the full amount of the rectifier's output voltage. The plate-to-cathode voltage in these circuits would remain 375 volts.

The effects on the receiver's operation of the -100 volts shorting to chassis ground would be:

a. Distorted sound, since the audio-output tube's bias of -18 volts is removed

b. Maximum brightness which cannot be reduced, due to the lack of kinescope bias.

c. Maximum picture strength which cannot be decreased, because the bias on the first three picture i-f amplifiers and the video amplifiers is now zero.

d. Picture out of sync, due to overloading in the video amplifiers and the lack of bias on the sync amplifier and separator.

Incomplete Filtering. In general, incomplete filtering may have two principal effects on the performance of a receiver. These are:

a. Hum may be introduced into sound and picture, because the ripple or variation of d-c voltage in the rectifier's output has not been sufficiently smoothed out.

b. Signals from one section of the receiver may be fed to another section where they do not belong. This is caused by the signal appearing across the B plus supply, instead of being shorted to ground through the power supply condenser.

How incomplete filtering might cause a signal to be fed into the wrong circuit is shown in Fig. 30-3.

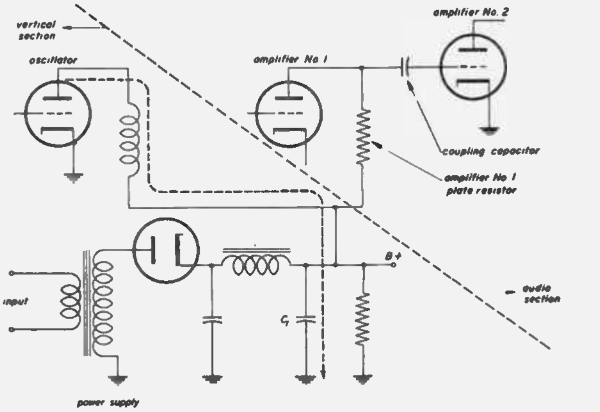

(a) Normal filtering

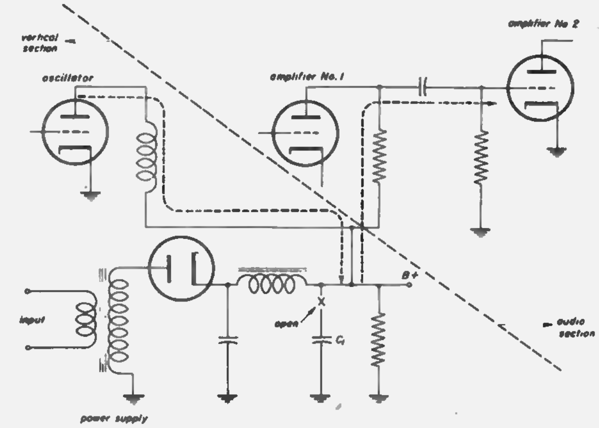

(b) Open filter condenser.

Fig. 30-3

Fig. 30-3*a* shows a properly operating power supply, with B plus connected to the vertical oscillator and to the audio amplifier. The signal from the vertical oscillator is bypassed to ground by the output filter condenser C_1. The signal is thus prevented from appearing in the B plus voltage.

Fig. 30-*b* shows C_1 open. Now the 60 cycle vertical oscillator signal will not be bypassed to ground, but will appear at the B plus point. It will then be applied to the plate of audio amplifier tube No. 1 and be coupled to the grid of tube No. 2, as shown in the diagram by the dotted line. The resulting sound from the speaker is called "sync buzz".

It is possible for other circuits to feed their signals into wrong stages, as well as the vertical oscillator just described. An example to illustrate this stray coupling is found in the RCA 8T241 receiver series, in which the power supply produces negative and positive output voltages. Suppose that the condenser from B minus to ground opens. The vertical oscillator signal feeds into the audio amplifier to produce the audible buzz. The horizontal oscillator also couples its signal into the kinescope grid. This produces a black vertical bar on the left side of the raster, which is present with or without the picture. Fig. 30-4 shows this condition on a kinescope screen.

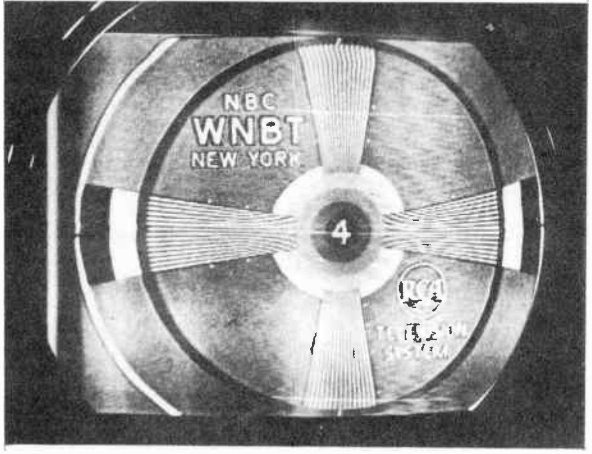

Fig. 30-4

Other symptoms may also appear, such as weak or unsteady vertical synchronization and sound still audible with the volume control turned down.

These multiple symptoms serve to illustrate that when a receiver fails to perform *several* of its normal functions, trouble in the power supply is indicated.

Motorboating. This term denotes a pulsation, occurring at a very low repetition rate, that may occur in the sound or the picture. It is a form of oscillation due to feedback. This feedback takes place in much the same way that a signal is fed from one circuit to another when a filter condenser opens.

Motorboating in the audio circuits actually sounds like the "putt-putt" of an outboard motor. In the video circuit, the picture flickers at a low rate. Incomplete power supply filtering is one cause of this condition.

Troubles in the Power Supply. In localizing a trouble in the power supply, there are four main possibilities: the total d-c output voltage is low or zero, the divided d-c output voltages are not correct, there is trouble in the a-c input to the rectifier, or there is trouble in the filament circuit. These are discussed in the following four sections.

TROUBLES IN THE TOTAL D-C OUTPUT

30-2. These include absence or low value of B plus voltage output from the rectifier.

No D-C Output. Absence of a-c power input would, of course, prevent the power supply from producing a d-c output voltage. An open circuit in the filter would have the same result. A voltmeter check can isolate the trouble. However, before the chassis is removed from the cabinet two possible causes should be checked:

a. The rectifier tube should be replaced, because if it is not conducting, d-c output could not be produced.

b. The loudspeaker must be connected if its field coil is used as the filter choke. Otherwise, the power circuit will be open.

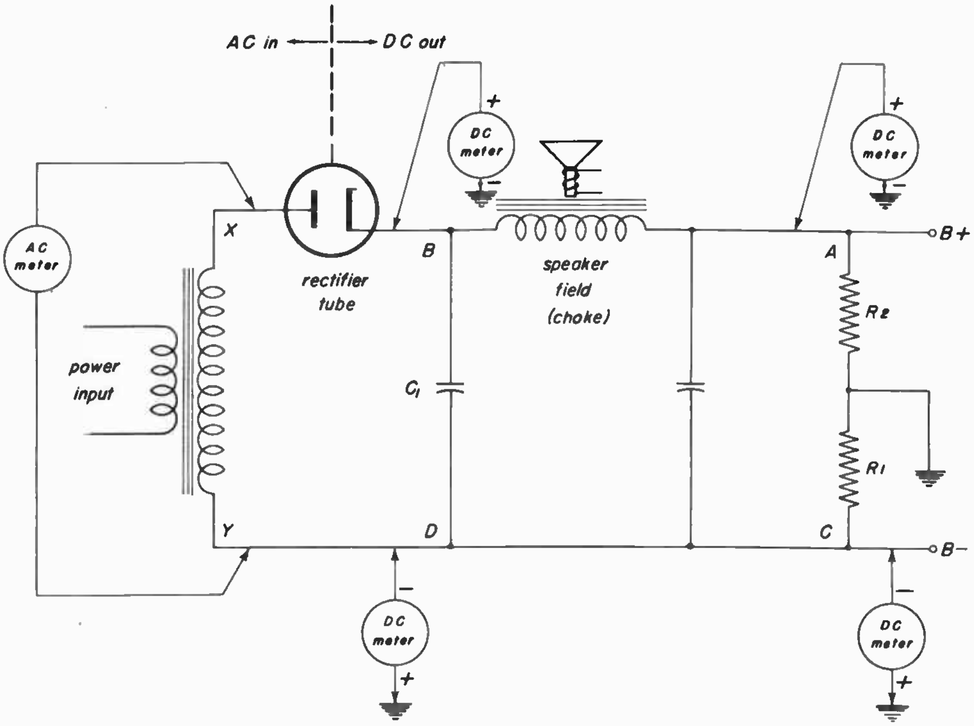

voltage absent	voltage present	open located	probable defect
point A,C,D →	point B →	between A–B →	open speaker field
point A,C,B →	point D →	between C–D →	disconnected wire
point A,B,C,D →	points X–Y →	between B–X →	rectifier tube not conducting
points A,B,C,D, X–Y →	—— →	between X–Y →	open secondary winding

Fig. 30-5

Fig. 30-5 illustrates how to use a voltmeter to isolate an open point in the power supply circuit. The primary and secondary voltages of the power transformer must be checked with an a-c meter. The voltages to the right of the rectifier in the figure are all d-c and must be checked with a d-c voltmeter. The d-c voltages should be measured to ground, since the bleeder is grounded. In most sets, ground is the chassis; in others, a common ground bus is used. In the latter case, the d-c voltages should be measured with respect to this common ground lead and not to the chassis.

Note that in checking with the voltmeter, the positive meter lead is always connected to the more positive of the two points to be measured. For example, point A in Fig. 30-5 is more positive than ground; therefore the positive lead of the meter is attached to point A and the negative lead to ground. Point C, however, is negative with respect to ground; therefore the positive lead of the meter is attached to ground and the negative lead to point C.

The table of Fig. 30-5 illustrates which voltages will be missing for various defects. For example, in the first case given, the open speaker field or filter choke will prevent any current flow through the bleeder. Points A and C will then be at ground voltage or zero. Point D, which is connected to point C, will also be at ground potential. The conducting rectifier tube will charge input filter condenser C_1, and there will then be a difference of potential across C_1 – between points B and D. Since point D is connected to ground through R_1, a voltmeter between point B and ground is across C_1 and R_1 and reads the condenser voltage.

An open secondary in a full-wave rectifier power supply may not have the same effect as in a half-wave circuit. For example, if the secondary of Fig. 30-6 should open between points X and Y, the upper half would continue to work. The top diode VI would continue to produce a d-c output, while V2 would not. This would result in a reduced output voltage.

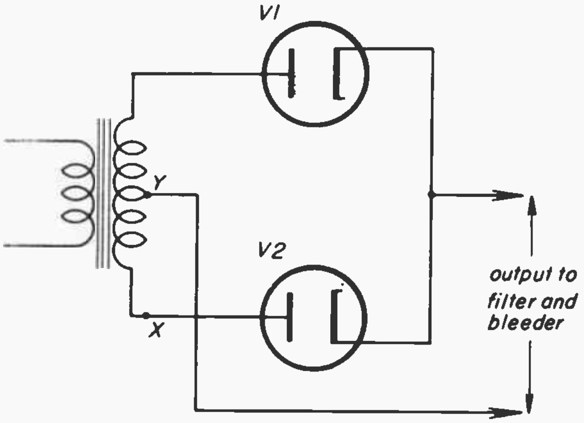

Fig. 30-6

If an open occurred at the center-tap, point Y, there would be *no* d-c output voltage, since the conducting path for both tubes would be open. This would be similar to the result of an open secondary in a half-wave rectifier.

Low Total Output. A decreased value of the total B plus output voltage is caused by one of three conditions:

a. Low a-c input voltage.
b. Increased resistance in the rectifier tube or selenium rectifier.
c. Partial short across the d-c output voltage.

Low A-c Input. The effects of the first condition, low a-c input voltage, are shown in the table of Fig. 30-7 for a typical 16 inch receiver. Data in this table was obtained by gradually reducing the a-c input voltage and recording the effect on the reproduced picture and sound due to the decreased d-c output voltage. The effects are the same when the d-c output voltage decreases from causes other than reduced a-c input.

Note that the first effect of smaller d-c output voltages is a reduced raster or picture size. The sound is not affected until the voltage has decreased considerably. Once the voltage drops below some low value, there is no sound or brightness. This illustrates what we said at the beginning of this troubleshooting section: that no sound and no brightness indicates that there is no B plus.

A-C IN	B+	SYMPTOMS
110 v.	385 v.	Normal
105 v.	355 v.	Vertical size reduced ¼ inch Horizontal size reduced ¼ inch
100 v.	340 v.	Vertical size reduced ½ inch Horizontal size reduced ½ inch Slightly out of Focus
95 v.	320 v.	Vertical size reduced 1 inch Horizontal size reduced 1 inch Out of Focus
90 v.	300 v.	Vertical size reduced 1 inch Horizontal size reduced 2 inches Out of Focus Brightness Dim
85 v.	265 v.	Vertical size reduced 2 inches Horizontal size reduced 3 inches Out of Focus Brightness very dim
80 v.	240 v.	No Brightness Sound volume low
65 v.	120 v.	No Brightness No sound

Fig. 30-7

Rectifier Internal Resistance. When the rectifier's internal resistance increases, because of a weak rectifier tube or a bad selenium rectifier, the total d-c output voltage is reduced. This is illustrated in Fig. 30-8.

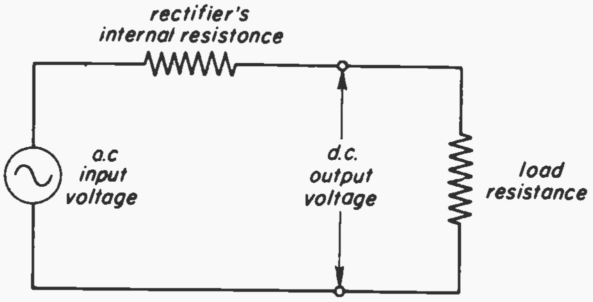

Fig. 30-8

Here we see a series circuit, with an a-c voltage applied to two resistors. One resistor represents the rectifier tube's internal resistance; the other represents the load resistance, comprising all the circuits using the d-c voltage.

This a-c voltage, converted into d-c, divides across the rectifier's internal resistance and the external load resistance. The voltage across the load resistance is the d-c output voltage.

The conductivity of the rectifier tube determines its internal resistance. If it conducts less readily, its internal resistance is increased. A weak rectifier tube, or one with too low a filament voltage, will not conduct as well, and thus has increased internal resistance. If the rectifier's internal resistance is increased, more voltage is developed across it, leaving less voltage across the load resistance. This would produce a smaller total d-c output voltage, and its associated trouble symptoms.

Disc-type rectifiers, such as selenium or copper oxide, may develop high resistance, with similar symptoms.

Partial Short across the Output. A partial short across the d-c output circuit decreases the load resistance, resulting in less voltage developed across it. The total d-c output may also decrease. Decreasing the load resistance has the same result as increasing the rectifier's internal resistance as far as voltage distribution is concerned.

It was pointed out earlier that a partial short across the output may result in changed individual voltages without necessarily changing the *total* d-c voltage. Whether or not the total voltage changes significantly depends upon the *voltage regulation* of the power supply, which is a measure of the ability of the power supply to maintain its d-c output voltage when the load current increases (the load resistance decreases).

Dead Short. A "dead short" or zero resistance across the power supply usually produces very definite results. If there is no fuse in the receiver, the plates of the rectifier glow a reddish color; the glass envelope may break; selenium rectifiers break down and emit a strong "rotten egg" odor; power transformers and filter chokes overheat, smoke and buzz loudly; house lights on the same line as the receiver may become dim and the house fuse may "blow". Because of these unmistakeable symptoms, a dead short was not included in the previous discussion of no output voltage, although, of course, the output drops to zero.

A complete plate to cathode short inside the rectifier tube will give the same symptoms as a short across the power supply. The 60-cycle a-c voltage from the secondary "sees" a very low impedance, made up of the shorted rectifier and the large filter condenser. The excessive current may damage the transformer and the rectifier. The tube can be checked before the chassis is removed from the cabinet. A visual inspection may show the short in a glass tube or an ohmmeter check can be made.

A shorted rectifier tube may have been caused by a short elsewhere in the circuit. When turning on a receiver after replacing a shorted rectifier, if the plates start glowing red, or the transformer starts buzzing, switch the set off immediately.

A dead short can damage the power transformer; excessive current heating the wires may destroy the insulation between turns and allow them to become shorted. When this happens, the transformer continues to smoke and overheat even after the dead short has been found and removed. To determine whether or not the transformer has been damaged, an ohmmeter check can be made. In the case of a center-tapped secondary in full-wave circuits, the exact resistance of the secondary need not be known. Shorted turns are indicated when the resistances of each half of the secondary are appreciably unequal. (They may be unequal by about 5% normally.)

A dead short can be localized to either the input or the output section of the rectifier by removing the tube. This disconnects the input and output circuits of the power supply. The receiver is then switched on. If the symptoms have disappeared, the short is in the output. If they reappear, the trouble is in the input. If the symptoms reappear, the receiver must be switched off immediately to prevent further damage to the transformer and to avoid blowing the house fuse.

Fig. 30-9 illustrates the use of an ohmmeter to find the exact location of a short across the power supply. The diagram is slightly irregular — the bleeder is not shown at the extreme right, but follows the placement of these components on the chassis.

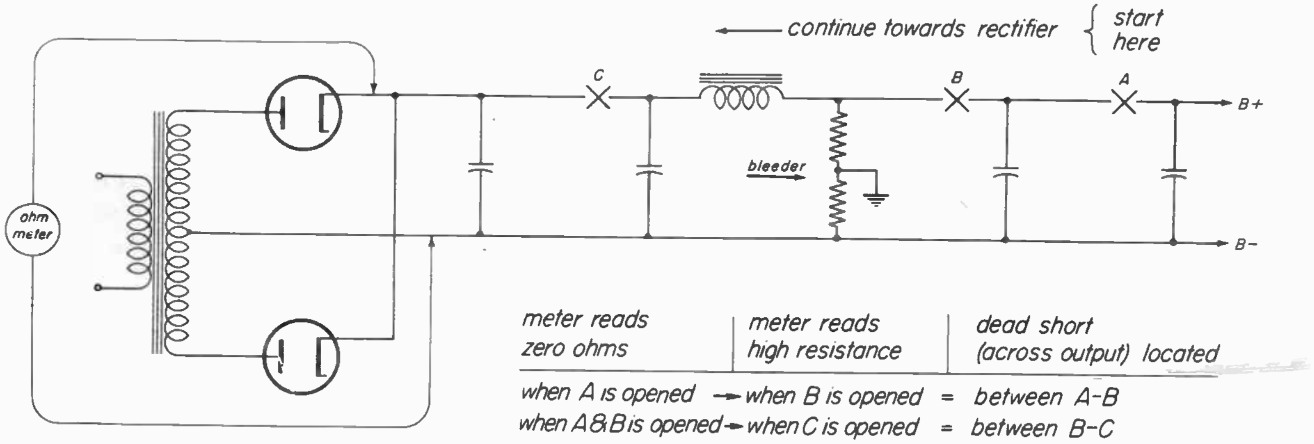

Fig. 30-9

The ohmmeter is set at the lowest scale and connected across the output of the rectifier, as shown in the diagram. The meter indicates the presence of a short circuit by reading zero ohms. While the meter remains connected across the output, the short is located as follows:

a. The circuit is opened at the end opposite from the meter connection — point A in the diagram. If the meter now reads a much larger value, the short is located to the right of point A (between point A and the rest of the B plus wiring).

b. If the meter continues to read zero ohms, point A is resoldered and a second point, closer to the meter, is opened — point B in the diagram. If the meter reads a much larger value, the short is located between points B and A.

c. If the meter continues to read zero ohms, point B is resoldered and a point still closer to the meter is opened. This procedure is repeated until a point is found at which a much larger value is read on the ohmmeter. The short is located between this point and the last-opened point at which zero ohms was read.

In general, a short circuit can occur in two ways:

a. Within a component, such as a tube or condenser.

b. As a result of a wiring defect which results in the accidental joining of two normally separated points.

Power supply components that could cause shorts, or the same effects as shorts, across the power supply, are: rectifier tubes, selenium rectifiers, and filter condensers. Although bleeder resistors are also connected across the power output, they are unlikely to short.

TROUBLES IN THE DIVIDED D-c OUTPUT

30-3. When the output voltage has become reapportioned incorrectly, as shown by a voltmeter, this indicates that a bleeder resistor or the load for part of the bleeder has changed value or become shorted.

Changed Value of Bleeder Resistance. An ohmmeter is completely effective in locating a faulty resistor when the tapped bleeder voltages have changed. However, there are cases in which the voltages have become incorrectly divided, yet the bleeder resistors are not at fault. These instances will now be discussed.

Equivalent of Changed Bleeder Resistance. Even though the bleeder resistors themselves have not changed value, a parallel load may change its value, which has the effect of a change of bleeder resistance.

A decreased current, flowing in parallel with the bleeder from one tap point to another, will have the same effect on the voltages as if the bleeder resistance between these points had increased. No resistance change could be detected by

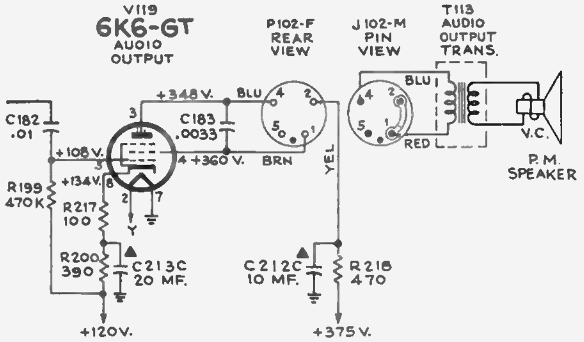

AUDIO OUTPUT STAGE

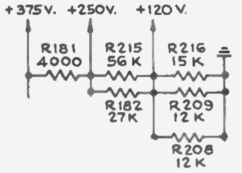

POWER SUPPLY BLEEDER

(a)

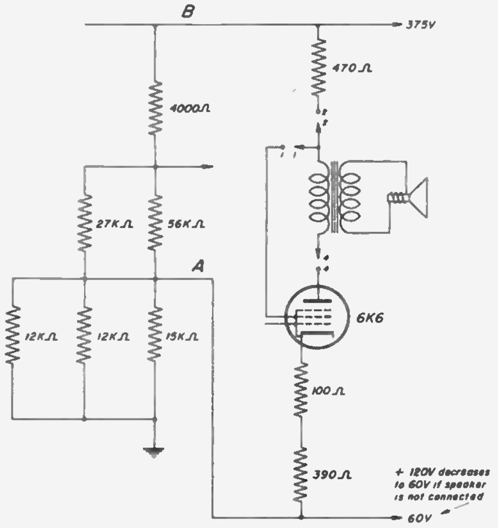

SIMPLIFIED CIRCUIT FOR (a)

(b)

Fig. 30-10

an ohmmeter, yet the voltages would have become incorrectly divided.

Fig. 30-10 shows how decreased load current between two taps on the bleeder can cause incorrect division of the voltages, without an actual change in the bleeder resistance. Fig. 30-10a is part of the schematic diagram of a typical TV receiver showing the audio output stage and the power supply bleeder. The audio tube is connected across part of the bleeder through the speaker plug. Fig. 30-10b shows the same diagram, slightly simplified. The 6K6 current flows up through the lowest section of the bleeder – the three parallel resistors 12K, 12K and 15K – to the +120 volt tap, then up through the cathode bias resistors (390 ohms and 100 ohms). The current continues through the tube, from cathode to plate and screen, up through the 470-ohm decoupling resistor to the +375 tap. Therefore, the tube's current is part of the total current between points A and B.

If the tube should become inoperative, or if the chassis is removed from the cabinet and operated without the speaker, no plate or screen current could flow. As a result, the amount of current flowing between points A and B in Fig. 30-10 is reduced. This is equivalent to an increased resistance between A and B, which causes the reduced voltage from point A to ground.

We said before that in a power supply producing only positive voltages, if the voltage at a tap decreased, it could indicate that the bleeder resistance between that point and B+ had increased. In this example, the 120+ volt point dropped to +60 volts, but not because of a change in the bleeder itself.

In this receiver the +120 volt tap is used as B+ for the sync amplifier. When this voltage decreases, the horizontal and vertical synchronization of the picture is weak; the picture rolls and tears more easily than under normal conditions.

Open Bleeder Resistor. An open bleeder resistor does not reduce the output voltages to zero, since the current will flow through any load that parallels the bleeder. Fig. 30-11 shows an open bleeder resistor with a vacuum-tube load across it.

The current would flow in the path indicated by the dotted arrows. Point A would be at a positive potential and point B would be at a negative potential, although neither would be the correct voltage value.

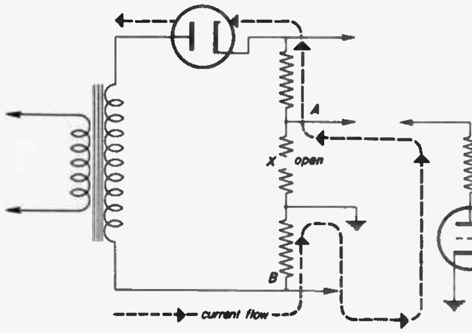

Fig. 30-11

Shorted Bleeders. A short circuit across part of the bleeder circuit is rarely if ever the fault of any resistor itself, since resistors themselves seldom short. The short circuit usually develops in the circuits connected to the bleeder taps.

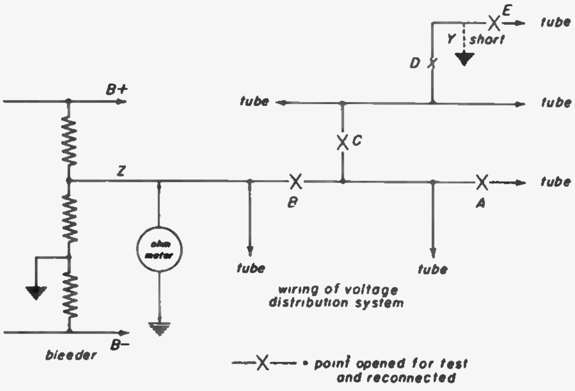

Fig. 30-12

Fig. 30-12 illustrates the method of finding such a short using an ohmmeter. The ohmmeter is connected at the point of the bleeder which shows the short circuit to ground. This is point Z on the bleeder in the diagram. Note that the short actually exists at point Y. The process of locating the short is as follows:

a. The wiring is opened at point A. When the ohmmeter continues to indicate the short, this point is reconnected.

b. Point B is then opened. The meter no longer shows a short from point Z to ground; this indicates that the trouble exists somewhere between points A and B. Point B is resoldered.

c. Point C is opened. Since the meter again stops showing a short, the trouble exists somewhere in the *direction* of B to C (*not between* B and C). C is reconnected.

d. Another point in this direction is opened – point D. Again the short indication on the meter ceases, showing that the trouble is in the direction of B to C to D. Point D is reconnected.

e. Point E is opened up. If the meter continues to show the short, the trouble lies *between* points D and E.

f. The ohmmeter may then be moved from bleeder point Z to help find the short to ground between points D and E.

The B minus voltage can become shorted to ground through a filament-to-cathode short inside a tube that has its cathode connected to B minus. We are assuming that one end of the filament is grounded, which is the usual case. Fig. 30-13 illustrates this:

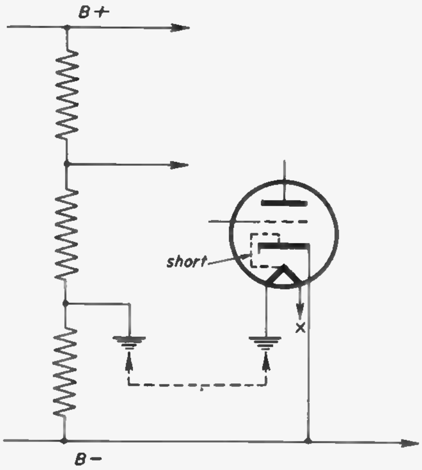

Fig. 30-13

This type of B minus short will be indicated by an ohmmeter reading, from B minus to ground, of about 3 ohms or less, but not quite zero. The reading is filament resistance. With this type of indication, it is possible to save time by checking all tubes the cathodes of which are returned to B minus. The trouble is found when the meter reading returns to normal after one of the tubes is removed from its socket.

As an example consider the circuit in Fig. 30-2 when B minus becomes shorted to ground. The resulting symptoms were previously described under "Incorrect Voltage Divider Output". Among them are maximum, non-variable brightness and distorted sound. The vertical oscillator would not seem to be associated with these symptoms, but this tube with its cathode tied to B minus could be the cause. A filament-to-cathode internal short in the tube shorts B minus to ground and produces all the symptoms described.

Equivalent of Shorted Bleeder Resistance. An increase of current flowing in parallel with the bleeder, from one tap to another, will have the same effect on the voltages as if the bleeder resistor between these points had become partially shorted. This condition might result from increased conduction in a tube. The bleeder voltages become incorrectly divided, yet an ohmmeter does not show a partial short since the effect is present only when power is applied to the receiver.

Fig. 30-14 illustrates this condition.

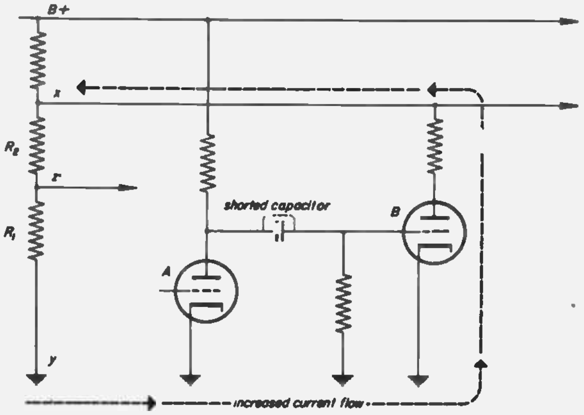

Fig. 30-14

Tube B, connected from point X to ground, will conduct very heavily if the coupling condenser from tube A becomes shorted. This heavy current flow will cause the voltage at point X to decrease. This will have the same effect as if R_1 and R_2 had become partially shorted.

TROUBLES WITH THE A-C INPUT.

30-4. These troubles include a low value of a-c input voltage to the rectifier, an open or short in the input of the power transformer, a shorted ON-OFF switch, and a "hot" chassis caused by the high potential side of the a-c line becoming shorted to the chassis.

Low A-c Input Voltage. The effects of low a-c voltages were shown in the table of Fig. 30-7. It may be useful to remember that when some of these symptoms appear at certain times of the day, they may be due to a line voltage change rather than a faulty receiver. For example, the raster may become a little smaller in the evening. This could be caused by the a-c line voltage decreasing, due to the increased load of electric lights.

Opened or Shorted Input Circuit. An ohmmeter can be used to test the continuity of the receiver's power input circuit while the chassis is still in its cabinet. This check, which can indicate an open or a short, is useful under the following conditions:

a. When the set is completely dead and it is desired to check for an open circuit.
b. When the set causes the house fuse to blow and it is desired to check for a short circuit.

Fig. 30-15 shows the ohmmeter used to test the power input circuit.

Normally, with the switch closed (in the ON position), the ohmmeter reads the low resistance of the primary winding. If the ohmmeter reads maximum ohms with the switch ON, an open exists in the primary, either in the primary winding or the input wiring.

When the switch is open (in the OFF position), the ohmmeter normally reads maximum ohms. If the ohmmeter reads low resistance with the switch OFF, there is a short in the wiring of the input circuit. This test does not show the presence of a short in the primary winding itself because, with the switch in the OFF position, the primary is not connected to the meter.

These tests are summarized in Fig. 30-15.

Shorted ON-OFF Switch. A short across the power switch prevents turning the set off. This can be seen from Fig. 30-15, where a shorted switch, point S, results in a closed circuit regardless of the position of the switch. This would not be a short across the input line, since the switch is in only one side of the line.

A short across the switch might occur, for example, if the metal cover of the

power switch position	ohmmeter reading	indicates
"on" →	maximum ohms =	open circuit
"on" →	trans. primary resistance =	no defect
"off" →	minimum ohms =	short circuit
"off" →	maximum ohms =	no defect

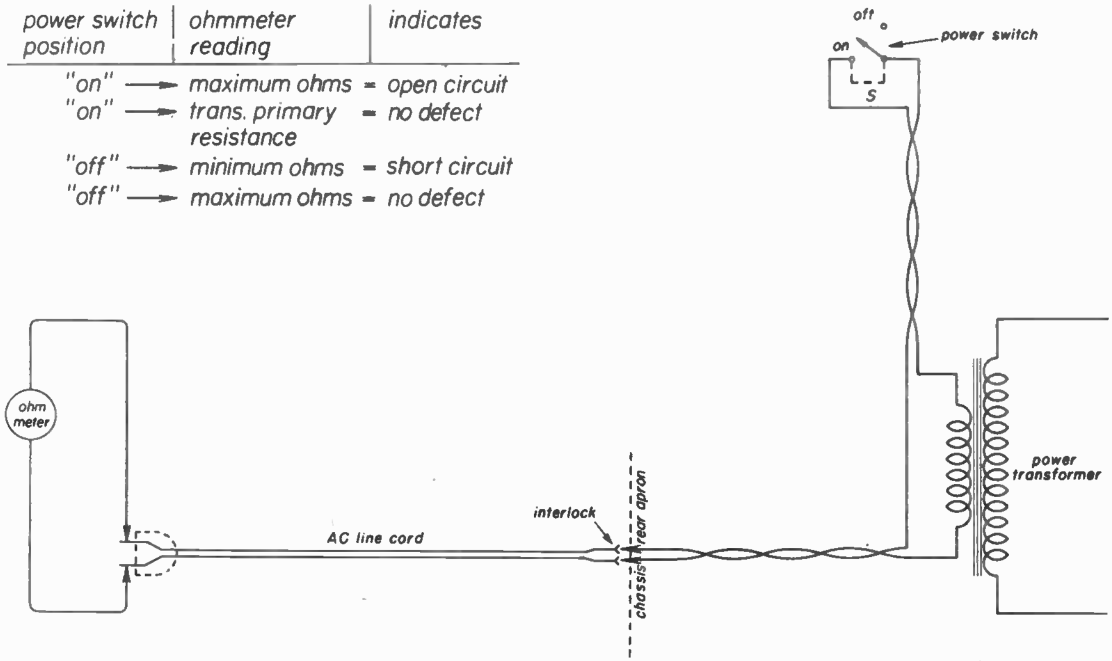

Fig. 30-15

switch unit became loose and shorted across the switch terminals. This is illustrated in Fig. 30-16.

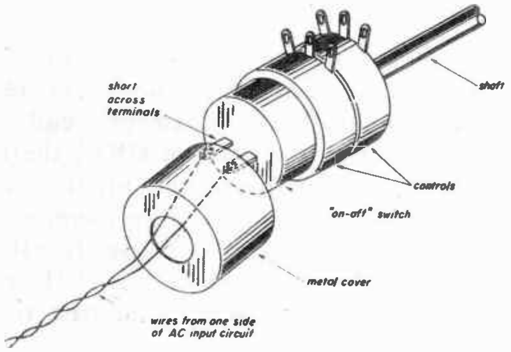

Fig. 30-16

"Hot" Chassis. In most a-c house wiring, one side of the line is connected to actual earth ground. This side is called the cold side of the wiring. The other side is called the "hot" side, because it is at a high potential with respect to ground. If this hot side of the wiring becomes shorted to the chassis of the receiver, the chassis will also become "hot". Fig. 30-17 illustrates this condition.

Between the chassis and earth ground there is a potential of 110 volts a-c. An a-c voltmeter connected between the chassis and a house water pipe will read this voltage. If this hot chassis were connected to earth ground, there would be a short circuit across the house wiring and the house fuse would blow.

If the wall plug, P in Fig. 30-17, were reversed, the cold side of the line would touch the chassis. Since the cold side is at earth ground, the chassis would no longer be hot. When a chassis is hot there is always a danger of shock.

Some folded-dipole antennas are electrically connected to the metal mast, which may be grounded to earth. The antenna coil inside the set is connected to the chassis, as shown in Fig. 30-17. The chassis is therefore connected to earth ground, and if the chassis is hot, the house fuse will blow.

Resistors are sometimes used in the receiver's antenna input circuit for impedance matching or signal distribution. R in Fig. 30-17 represents their use in this manner. If the hot chassis should become grounded the resistors would become overheated and probably ruined.

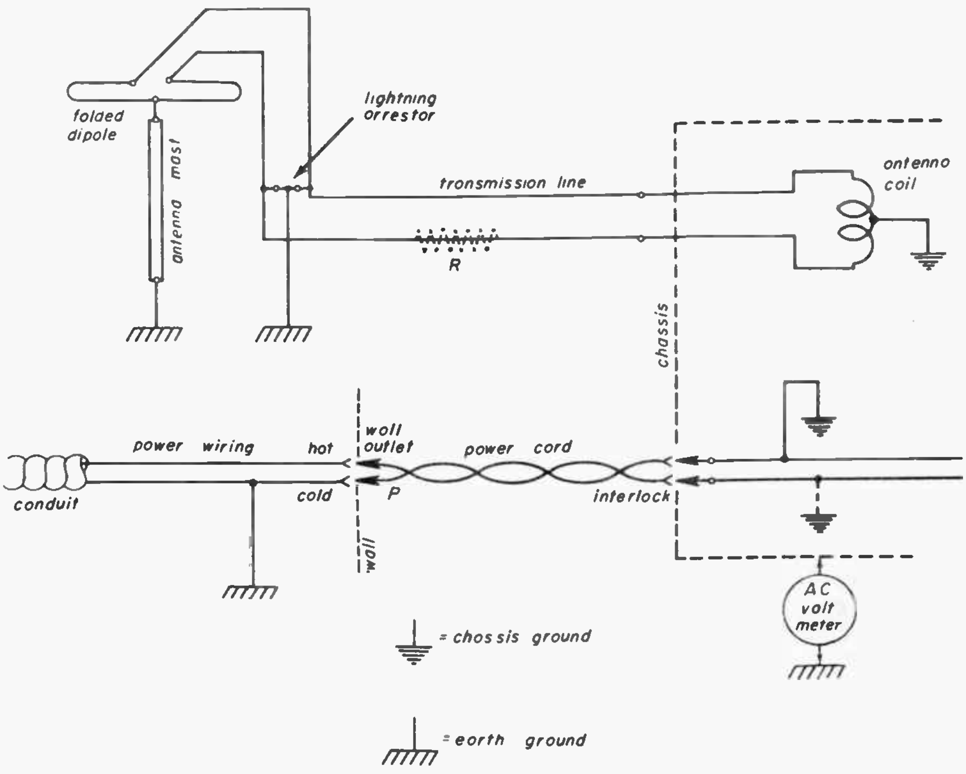

Fig. 30-17

Some lightning arrestors consist of two neon bulbs, one connected from each side of the transmission line to earth ground (Fig. 30-17). A hot chassis could cause these neon bulbs to "fire" (ionize the gas making the tubes conduct). This would have the effect of a short across the transmission line and result in weak picture and sound.

In another electrical wiring system, not widely used, each side of the line is 55 volts different from earth ground. In this system, reversal of the wall plug would have no effect.

TROUBLES IN THE FILAMENT CIRCUIT.

30-5. Opens and shorts are the principal troubles in filament circuits.

Open Filament Circuits. An open circuit in the hot leg of parallel-connected filaments is readily localized. The open is located between the last lighted filament and the first unlighted one, as illustrated in Fig. 30-18.

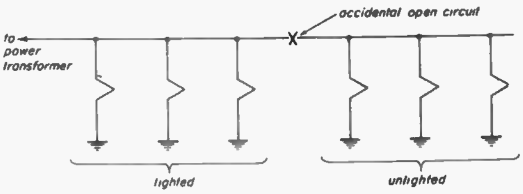

Fig. 30-18

When only one or a string of parallel-connected filaments is dark, the open must be in the wire routed only to that particular filament, assuming that the filament itself is not at fault. This is either point Y or point Z in Fig.30-19a.

To determine whether the open is at the hot side or the cold side of the filament circuit, an a-c voltmeter can be used, as in Fig. 30-19b.

a. When the meter is connected from point H (hot leg) to chassis, it should read the 6.3 volts a-c whether the tube is lit or not, if the open is at point G or point I.

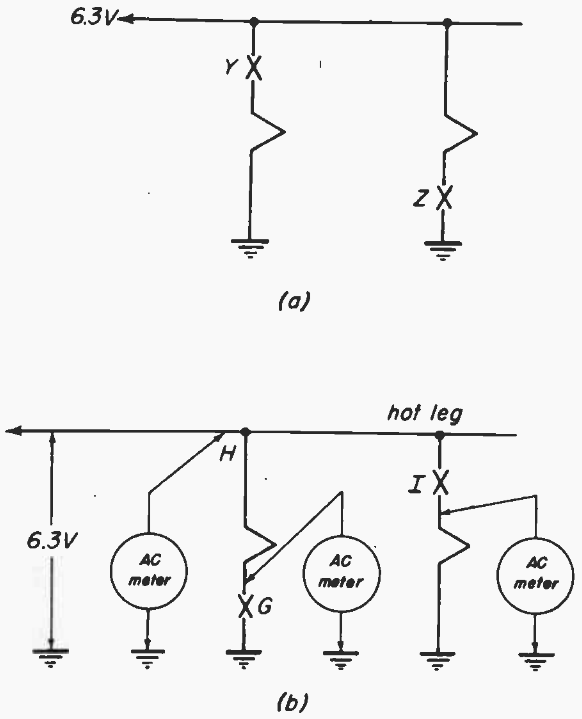

(a)

(b)

Fig. 30-19

b. To check for an open on the grounded side, place the voltmeter at the grounded filament pin. If it *gives a reading*, the open is at point G.

c. To check for an open on the hot side, place the meter at the hot pin. If it *reads zero*, the open is at point I.

When the open is intermittent, the effect on receiver performance appears and disappears, corresponding to the *slow* cooling and warming of the filaments.

Shorted Filament Circuit. A short in the filament circuit can cause destruction in the receiver. Since the voltage stepdown filament winding of the power transformer can deliver heavy currents without blowing the house fuse, the wires carrying filament current become badly overheated and may even glow red hot. The insulation burns, and adjacent components become scorched. The copper wire itself may be ruined, becoming very brittle. This destruction may be avoided if the receiver is switched off as soon as large quantities of smoke is seen.

The short is located at the point in the wiring where the streak of destruction terminates. Fig. 30-20 shows a photo of damage caused by a short in the filament circuit.

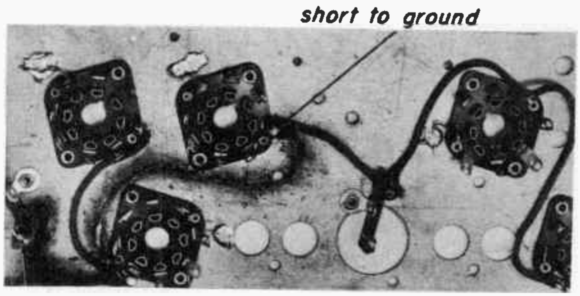

Fig. 30-20

Low Filament Voltage. Low Filament voltage is usually due to a high-resistance connection. Since the filament resistance itself is very small, the addition of only a few ohms in series with it will materially reduce the voltage appearing across it. A faulty connection, such as an unsoldered joint which becomes dirty, or a badly-soldered joint, will add resistance and prevent a filament from reaching its correct operating temperature.

A bad connection in the hot leg of filament distribution wiring is characterized by a decreased filament voltage at several tube sockets.

A faulty connection in the ground side affects only the filament with this bad joint. In this case, the voltage at the hot side of the filament reads normal, but at the ground side some voltage is present where none should exist.

HUM TROUBLES

30-6. The power input supplied to the television receiver is 60-cycle a-c. It is changed to d-c in the low-voltage power supply, and the d-c component is distributed to all the amplifier and oscillator circuits in the receiver. The 60-cycle a-c power is also used to heat the filaments of all the tubes in the receiver.

The various amplifier circuits in the receiver are capable of amplifying 60-cycle a-c voltages. If the 60-cycle a-c voltage accidentally is coupled to the input of one or more of these amplifiers, undesired effects are produced in:

a. the picture
b. the sync
c. the raster
d. the sound
e. any combination of these

When a-c voltage from the power line is present in the sound circuits, it is referred to as "hum", because of the sound. The effect of unwanted a-c voltage upon the picture or raster is of course not audible, but for convenience is also called "hum". The visible effects may be:

a. ripple in the side of the picture
b. ripple in the side of the raster
c. one or two dark horizontal bars in the picture
d. one or two dark horizontal bars in the raster
e. any combination of these

TYPES AND CAUSES OF HUM

30-7. From a service point of view, the term "hum" does not include all sorts of extraneous noises; the word generally refers to the effects of power line frequency getting into circuits where it should not be.

60- and 120-Cycle Hum. The a-c voltage used to heat the filaments has the same frequency as that applied to the receiver input – 60 cps. The frequency of the ripple in the d-c output of the low voltage power supply is the same frequency as the a-c power input (60 cps) if the power supply uses a half-wave rectifier. The ripple frequency is double the a-c input frequency – 120 cps – if the power supply uses a full wave rectifier. Therefore, hum voltages at both 60 cps and 120 cps are present in receivers that have full wave rectifiers; 60-cycle filament voltage, and 120-cycle ripple in the d-c voltage.

In receivers using half-wave rectifiers, only 60-cycle hum voltage is present; 60-cycle filament voltage and 60-cycle ripple in the d-c voltage.

The 60-cycle hum causes one ripple in the side of the raster or picture, and one dark bar in the picture. 120-cycle hum causes two ripples and two bars. The number of ripples or bars is determined by the relationship between hum frequency and field repetition frequency (vertical deflection frequency). Figure 30-21 illustrates this relationship. The television field repetition frequency is 60 cps; that is, a new field is completed every 1/60 second. The 60-cycle hum contains one complete cycle in 1/60 second. This is why it causes one complete ripple or one dark bar in the raster. (The raster is dark during the time the hum cycles are negative at the kinescope grid.) The 120-cycle hum contains *two* complete cycles in 1/60 second. Therefore, it causes two ripples or bars. Fig. 30-21 illustrates how one or two ripples in the kinescope can be produced by 60- or 120-cycle hum. In either case, if vertical retrace occurs during a bar, it will appear as a half-bar at the bottom of the raster, with the other half at the top. This should be remembered, so that if you find two narrow bars, at the upper and lower edges, you will recognize them as actually being the two halves of a single bar.

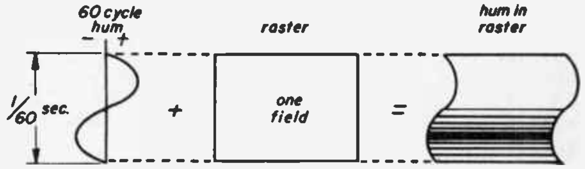

(a) 60 cycle hum

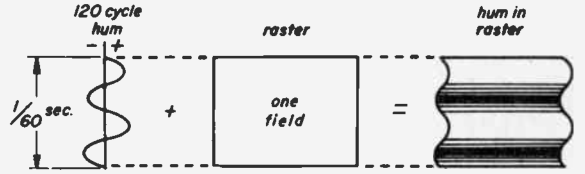

(b) 120 cycle hum

Fig. 30-21

In summary, hum is present in the receiver in two forms and at two frequencies, as follows:

a. A-c filament voltage at 60 cps.
b. Ripple in the d-c supply voltages at
    1. 60 cps for half-wave rectifiers
    2. 120 cps for full-wave rectifiers

It should not be supposed that hum, combined with the vertical deflection sawtooth, causes bars or ripples in the raster. The relationship between vertical deflection frequency and hum frequency determines only the *number* of bars or ripples, when the hum is present in the video signal and horizontal deflection circuits. Hum voltage in the vertical circuits causes non-linear vertical scanning, or poor vertical sync.

Hum Caused by Ripple in the d-c Voltage. There is always some 60- or 120-cycle ripple in the d-c supply voltage of a television receiver, since perfect filtering is impossible, and this voltage is *always* applied to the various amplifier and oscillator circuits as part of the d-c voltage required by the circuits for operation. Normally, the 60- or 120-cycle ripple is not large enough to be noticed in the sound or on the screen. A typical amount of ripple for a properly operating receiver might be 1 percent. In this case, 200 volts direct current would contain 2 volts of 60- or 120-cycle ripple.

However, the components in the power supply filter can fail in such a way as to cause the amount of ripple in the d-c voltage to increase. When this happens, 60- or 120-cycle hum can be heard in the sound or seen on the screen. Filter failures which cause hum are:

a. Open filter condenser
b. Shorted filter choke

These two failures do not alter the d-c output of the power supply enough to impair the operation of the receiver. They *do* reduce the degree of filter action enough to make the ripple voltage increase and appear as hum in the sound or on the screen.

Hum Caused by 60-cycle Filament Voltage. The 60-cycle a-c filament voltage is normally confined to its distribution circuit. The filament distribution circuit has no physical connection to any other circuit of the receiver. In order for the 60-cycle filament voltage to appear as hum in the sound or on the screen, it is necessary for a physical connection to develop between the filament circuit and some other circuit.

The tubes themselves can fail in such a way as to connect the filaments to another circuit. An example of this is a short or leakage between the filament and cathode of a tube. This condition can easily occur in a vacuum tube because filament and cathode are very close to each other. Hum results, since the filament is connected to the cathode by the connection forming the short.

These unwanted connections or shorts can also occur outside the tube, in the wiring. At a tube socket, the wire soldered to the filament pin may accidentally touch the grid pin. In this case no damage to the filament circuit results because the grid resistor between the accidental filament connection and ground prevents excessive current drain on the filament supply. The only trouble caused is hum.

Hum from the filament voltage can be introduced by a short *in any section of the television receiver.*

HOW CIRCUITS AFFECT HUM

30-8. Some circuits will respond directly to hum frequencies, and some will not, but will have an indirect response only. By understanding just what does happen in the several circuits, you will find it much easier to track the trouble down, from a given set of symptoms.

Hum in Circuits which Respond to Hum Frequencies. Hum voltage has a direct effect upon any circuit which is responsive to the hum frequencies of 60 and 120 cps. For example, consider an amplifier that responds to a frequency range of from 30 cps to 10,000 cps. If hum voltage were introduced into such a circuit it would amplify the hum, since the hum frequencies are within the 30- to 10,000-cps range. If the signal normally amplified in this circuit were also present, both the hum and the signal would be amplified. However, the hum would be amplified even if no other signal were present. If hum is present in any circuit capable of responding to the hum frequency, hum will appear in the output, regardless of whether or not another signal is present.

The following circuits of a television receiver are responsive to hum frequencies:

a. Audio amplifiers
b. Video amplifiers
c. Sync.amplifiers
d. Vertical deflection amplifiers
e. Horizontal deflection amplifiers

Hum in Circuits which do not Respond to Hum Frequencies. Hum has no direct effect upon circuits which are not responsive to the hum frequencies. However, hum can pass through these circuits in combination with the signal normally present. The hum can then appear in the output, together with the normal signal. For example, suppose that hum is accidentally applied to a picture i-f amplifier which responds to a frequency range of from 21.25 to 25.75 mcs. The lowest frequency here is 21,250,000 cps. The hum frequencies, 60 and 120 cps, are so far outside this range, that, with no picture signal present, the hum could not be amplified, and would not appear in the output. But with a picture signal also present, the hum would combine with the signal by modulating it. The hum would then appear in the output together with the picture.

The following circuits of a television receiver do not respond to hum frequencies:

a. Picture i-f amplifiers
b. Sound i-f amplifiers
c. Converter
d. RF amplifier
e. Local oscillator

How Hum Combines with Signal. Hum can combine with a higher frequency signal in one of two ways. The two types of combination are:

a. Addition of the hum and signal voltages.
b. Modulation of the signal by the hum.

The hum modulation can pass through a circuit which does not respond to the hum frequency but which does respond to the frequency of the signal. When the hum is merely added to the signal, the added hum cannot pass through circuits which do not respond to the hum frequency. Fig. 30-22 illustrates the waveshape that results in each case. The type of combination which will take place in a particular circuit is determined as follows:

a. Modulation occurs if the hum and signal are rectified when they combine.
b. Addition takes place if the hum and signal are not rectified when they combine.

Effect of Hum on Oscillators, Amplifiers and Detectors. In general, hum is likely to *modulate* a higher frequency signal of an oscillator or amplifier if the hum is applied to the grid or cathode. This is the case when hum comes from the filament voltage supply, which can be caused by a cathode-to-filament short. Hum is likely to add to a higher frequency signal of an oscillator or amplifier if it is introduced in the plate circuit. This is the case when hum is caused by excessive ripple in the plate voltage supply.

Modulation is probable when hum is introduced in grid-cathode circuits, because there is a tendency for rectification to result. Rectification is simply the reproduction of the positive component of the signal's waveform with a different amplitude than the negative component.

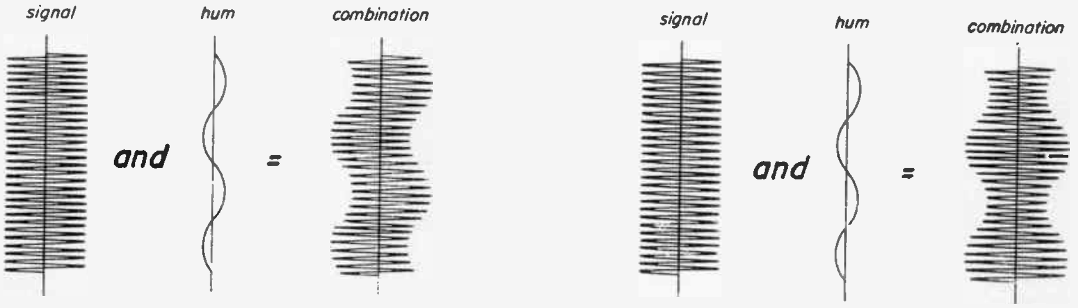

(a) addition

(b) modulation

Fig. 30-22

There are two ways in which rectification can take place when hum develops in a grid-cathode circuit.

a. Cathode to grid current can flow while the grid is positive. This is grid rectification.
b. The grid bias can be such that the tube's output in the plate circuit is not equal for the positive and negative parts of the input waveform. This is plate rectification. You could call it "lop-sided" amplification.

Modulation is *not* probable when hum is introduced by way of the plate supply voltage. The ripple voltage would have to be a very large percentage of the d-c supply voltage before a tube's plate voltage could be varied enough to cause rectification.

Modulation will almost certainly occur if hum is introduced in the grid-cathode circuit of an oscillator. The oscillators used in television receivers are usually designed to draw grid current (grid rectification) during normal operation, to provide the grid leak bias.

Modulation will almost certainly occur if hum is introduced into a detector. Detectors are basically rectifiers. Hum due to ripple in the d-c supply voltages would not be introduced in a diode detector, because these circuits do not need B plus voltage for operation. Hum introduced in a diode detector, therefore, would have to come from the filament supply.

HUM IN THE RASTER

30-9. By hum in the raster we mean a hum symptom that can still be seen in the raster even though no picture is present. The picture can be removed for a test by shorting the antenna terminals together. The hum symptoms are:

a. Bars in the raster
b. Ripples in the side of the raster
c. Both bars and ripples

In each case the hum may or may not be heard in the sound.

Ripple in the Side of the Raster. Ripple in the side of the raster is caused by hum combined with the horizontal scanning signal Each horizontal scanning line is produced by a sawtooth waveform applied to the horizontal deflection coil. The amplitude of the sawtooth determines the width of the line produced. Hum in the horizontal scanning signal varies the amplitude of the sawtooth waveforms which make up the scanning signal. The variations of sawtooth amplitude follows the variations of the hum waveform. Since the width of the horizontal lines is determined by the amplitude of the sawtooth, the width of the horizontal lines also varies according to the hum waveform.

The manner in which the raster width varies depends upon whether the hum modulates the scanning signal or adds to it. Fig. 30-23 shows the two types of raster ripple and an oscillogram of the scanning signals associated with each type. Note that in the case of modulation, the bulges and indentations on the left and right side of the raster are directly *opposite each other.* In the case of addition, the bulges are opposite the *indentations.* By noting which is the case, we can tell whether modulation or addition is taking place.

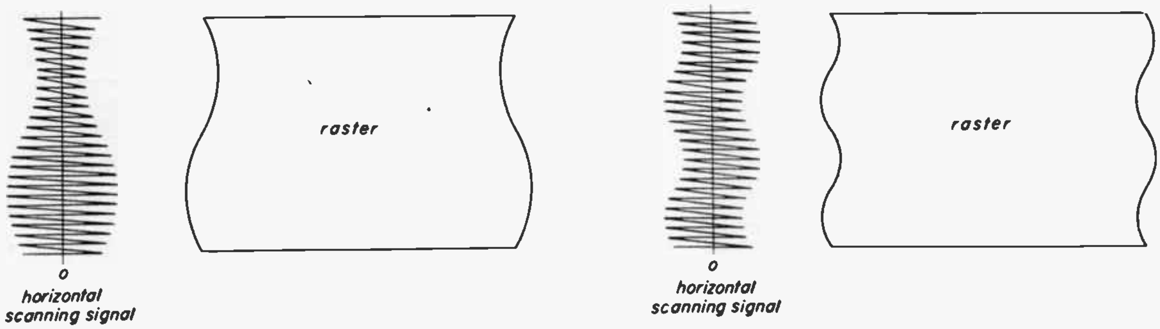

(a) Ripple in side of raster due to modulation of horizontal scanning signal by hum.

(b) Ripple in side of raster due to addition of horizontal scanning signal and hum.

Fig. 30-23

If addition is taking place, the hum is probably entering the horizontal scanning circuit via ripple in the d-c supply voltages.

If modulation is taking place, the hum is probably entering via the grid-cathode circuits of the receiver's horizontal scanning section. If so, it originates in the filament voltage supply system.

Hum Bars in the Raster. Hum bars in the raster are caused by hum voltage at the kinescope control grid. The bars remain even when there is no picture on the raster; therefore, we know that the hum is not combined with the picture signal. Since the hum voltage exists at the kinescope grid with no other signal present, the hum must have been introduced in the video amplifier circuits, including the kinescope grid. The video amplifier responds to hum frequencies, and amplifies the hum voltage itself.

Localizing Raster Hum. We can make use of the information compiled so far to work out a system of localizing the cause of hum in the raster.

The first step is to determine whether the hum comes from ripple in the d-c voltages or from filament voltages. The following are indications of raster hum caused by *ripple in the d-c voltages:*

a. Two cycles of hum or ripple (120-cycle hum frequency).

b. Hum in the raster *and* in the sound *at the same time.*

c. Ripples *and* bars in the raster *at the same time.*

d. Bulges of the raster ripple directly opposite the indentations (addition of hum and horizontal scanning signals).

In connection with the first indication, however, it is important to note that hum in the d-c voltages *can* be at 60 cps if a half-wave rectifier is used. In such a case, indications *b*, *c* and *d* are useful in distinguishing filament hum from power supply ripple. Here, understanding the difference between modulation and addition is useful, since it makes it possible to distinguish between two possible causes of 60-cycle ripple.

If these indications are present, the hum is caused by an open power supply filter condenser or a shorted filter choke. Fig. 30-24 is a photograph of hum in the raster of a television receiver with an open power supply filter capacitor.

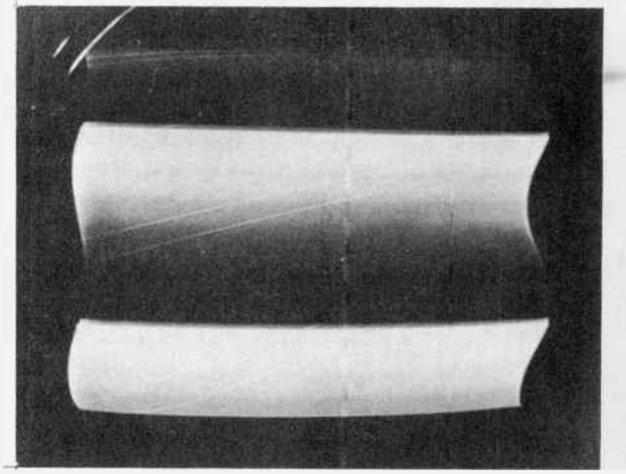

120 CPS. POWER SUPPLY HUM IN RASTER

Fig. 30-24

Filament Hum in the Raster. – The following are indications of raster hum caused by *60-cycle filament voltage.*

a. 60-cycle hum in the raster *but* not in the sound.
b. 60-cycle bars in the raster *but* no ripples in the raster. See Fig. 30-25.
c. 60-cycle ripples in the raster *but* no bars in the raster. See Fig. 30-26.
d. 60-cycle ripple with bulges *opposite* each other, and indentations opposite each other. See Fig. 30-27.

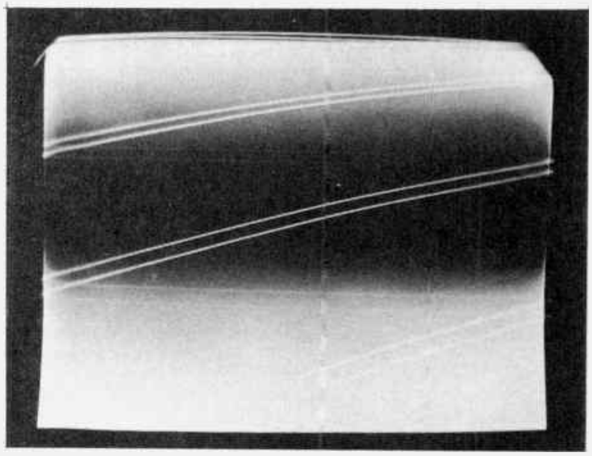

60 CPS. FILAMENT HUM BAR IN RASTER

Fig. 30-25

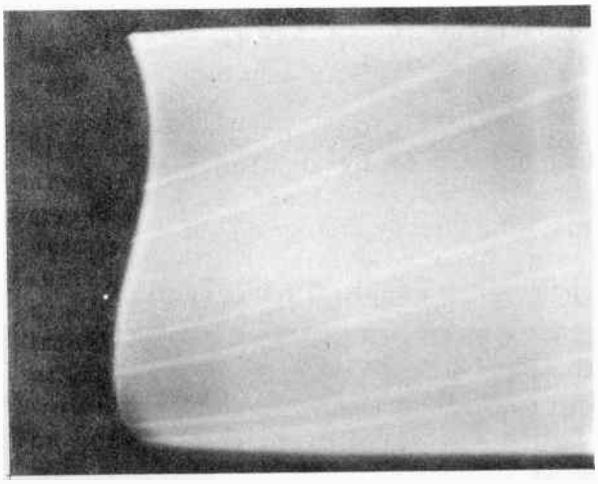

60 CPS. FILAMENT RIPPLE IN RASTER

Fig. 30-26

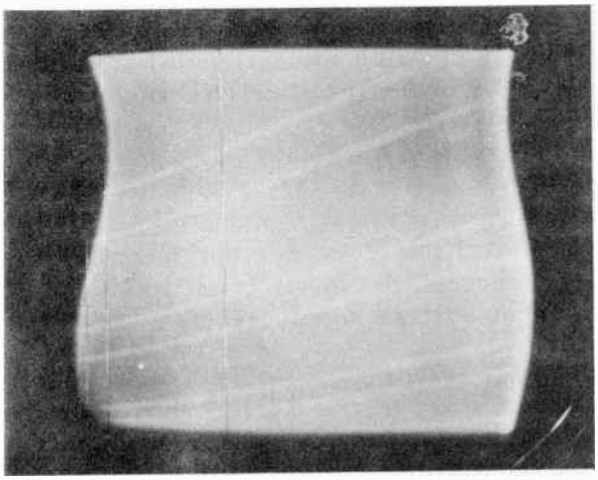

60 CPS. RIPPLE — BULGE OPPOSITE BULGE

Fig. 30-27

If these indications are present it is necessary to know in which section of the receiver the filament hum is introduced. Fig.30-28 will help.

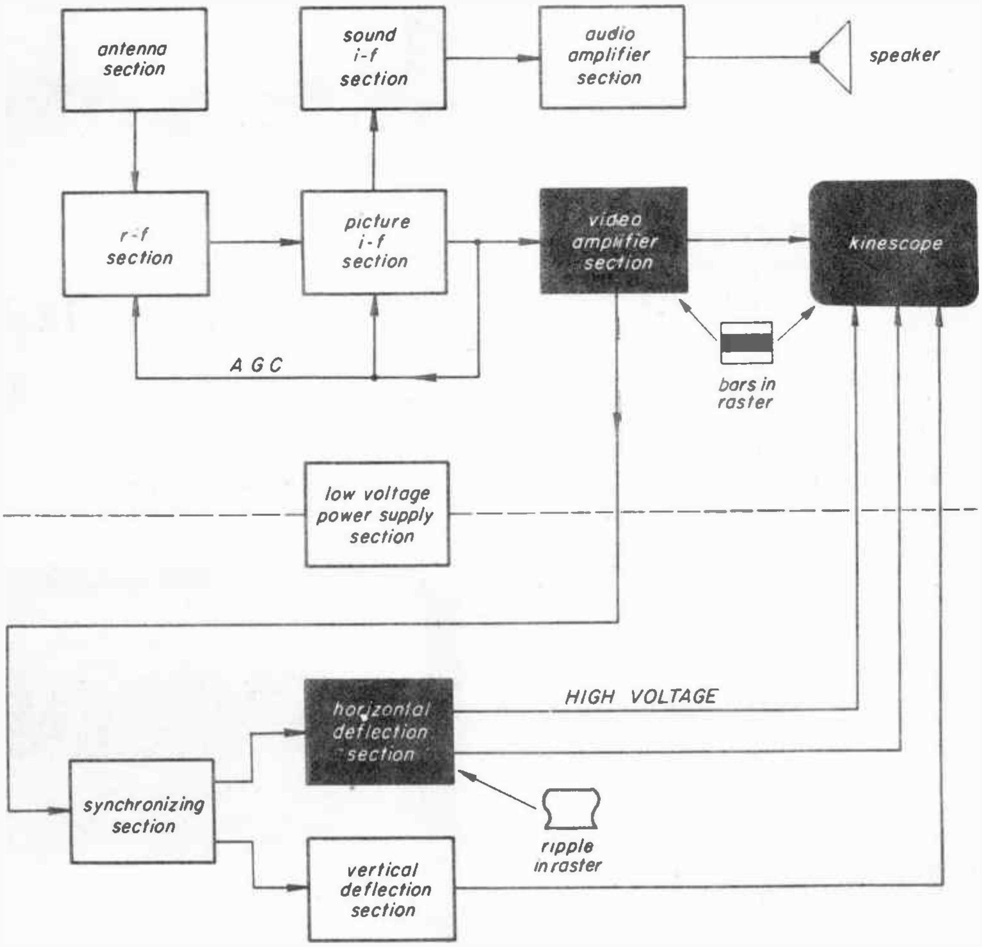

HUM IN THE RASTER

Fig. 30-28

a. *Hum bars in the raster* are introduced in the video amplifier.
b. *Ripple in the side of the raster* is introduced in the horizontal deflection section (horizontal oscillator, discharge tube, damper and output tube).

In the case of the video amplifier, the trouble can be localized further by momentarily removing the tubes. If the hum disappears when a tube is removed, it must have been introduced at or before that tube. This test cannot be used in the horizontal scanning section, since if a tube is removed here there will be no raster.

Hum due to filament voltage is often caused by a faulty tube. The tubes can be checked by substitution. If the tubes are not at fault, an inspection of the filament wiring will frequently reveal a short circuit.

HUM IN THE PICTURE

30-10. By hum in the picture we mean a hum symptom which disappears when the picture is removed. That is, the hum can be seen when a picture is on the screen but not when only a raster is on the screen. The picture can be removed for test purposes by short circuiting the antenna terminals. The symptoms are:

a. Hum bars in the picture
b. Bend in the side of the picture
c. Hum bars and bend in the picture

Hum in the sound may or may not accompany these symptoms.

Hum in the Horizontal Sync. Hum voltage can combine with the horizontal synchronizing pulses in the horizontal sync circuits. Hum can also combine with horizontal sync in the sync circuits where both vertical and horizontal sync are present. The result of hum in the horizontal sync is that the horizontal sync pulses vary in amplitude in accordance with the variations of the hum waveform.

If the hum is strong enough, the amplitude of the sync pulses can drop all the way to zero during the negative half-cycle of the hum waveform. This is illustrated in Fig. 30-29.

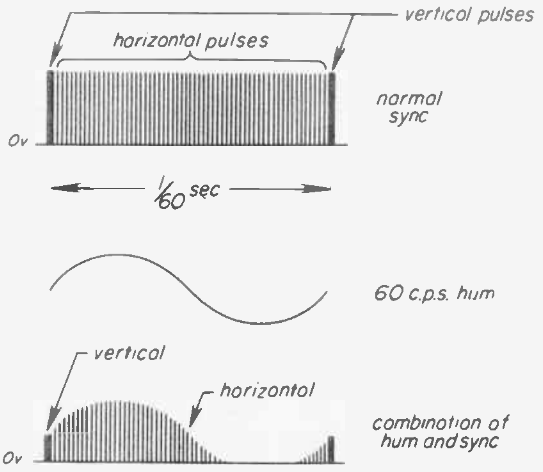

Fig. 30-29

Note that there is actually *no horizontal sync* for *part of the time* between two vertical sync pulses. A raster is traced during the time between vertical sync pulses. It would be logical to expect *part* of the picture to be out of horizontal sync when a strong hum voltage combines with horizontal sync and this does happen. Fig. 30-30 is a photograph showing this condition; one-half the picture is out of horizontal sync.

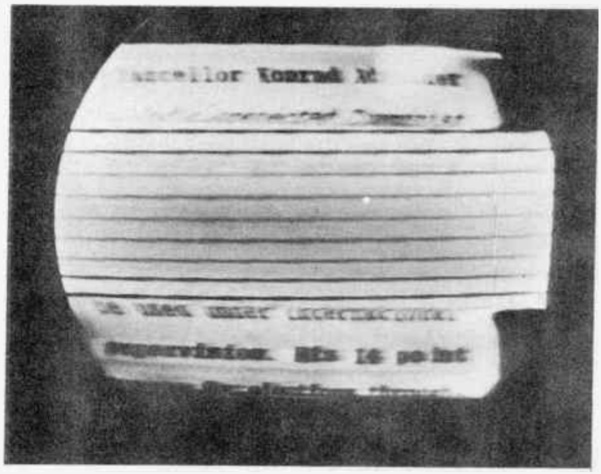

Fig. 30-30

Bend in the Picture. Fig. 30-30 was made on a receiver model which does not have a synchrolock or synchroguide circuit. Most television receivers are equipped with one or the other of these automatic horizontal frequency control circuits. In such receivers, loss of horizontal sync during part of the time required to scan the raster does not cause part of the picture to be completely out of sync, because the automatic frequency control circuit prevents it. Instead, the picture bends; this condition occurs as the picture tends to go out of sync but is prevented by the automatic circuit, which allows only a gradual horizontal shift of the scanning lines. The slight change in timing of the horizontal scanning circuits which produces the shift is not sufficient to alter the amplitude of the sawtooth waveforms of the horizontal scanning signal. Therefore the width of horizontal scanning lines remains the same for each line. The side of the raster is straight. Bend in the side of the picture while the raster remains straight, therefore, is caused by hum in the horizontal sync. This is shown in Fig. 30-31.

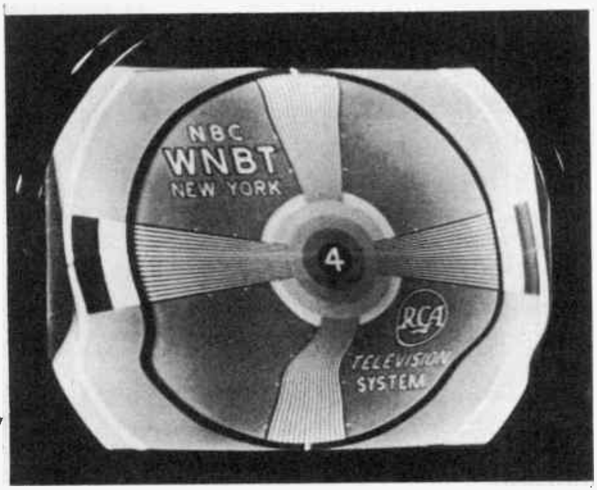

HUM BEND IN PICTURE BUT NOT IN RASTER

Fig. 30-31

Hum Bars in the Picture. The r-f and i-f sections of the receiver do not respond to hum frequencies. A picture signal must therefore be present before hum introduced in these sections can pass through them. When the hum modulates the picture signal it reaches the kinescope control grid together with the picture. This will produce bars in the picture, because any hum on the kinescope grid will cause the appearance of bars. In section 30-9 we discussed hum bars in the raster, which were independent of the picture signal; the hum we are talking about now gives bars only when the picture signal is present. The reason for the difference is that in the first case, the hum reaches the grid like an ordinary signal, but in the second case it has to "ride in" on the picture signal by modulating it. The obvious test to distinguish them is to short the antenna terminals to cut out any picture signal. If the bar disappears, the hum was "riding" the signal and entering through the r-f or i-f stages; if the bar remains, it must be the video stages where the hum gets in. Fig. 30-32 shows the hum bar in the picture.

HUM BAR IN PICTURE

Fig. 30-32

Localizing Picture Hum. It is unlikely that hum in the picture would be caused by hum ripple in the d-c voltage supply. The ripple in the d-c voltage would appear in the raster as well as in the picture, because hum would enter the video amplifier via the B supply system. Therefore, it is safe to assume that picture hum comes from the filament voltage. Localizing picture hum is a matter of deciding in what stage of the receiver the filament voltage combined with the picture signal. It is possible for hum to get into the picture through the following stages:

a. R-f amplifier
b. Converter
c. Local oscillator
d. Picture i-f amplifiers

Note that the local oscillator is one possibility. The signal generated by the

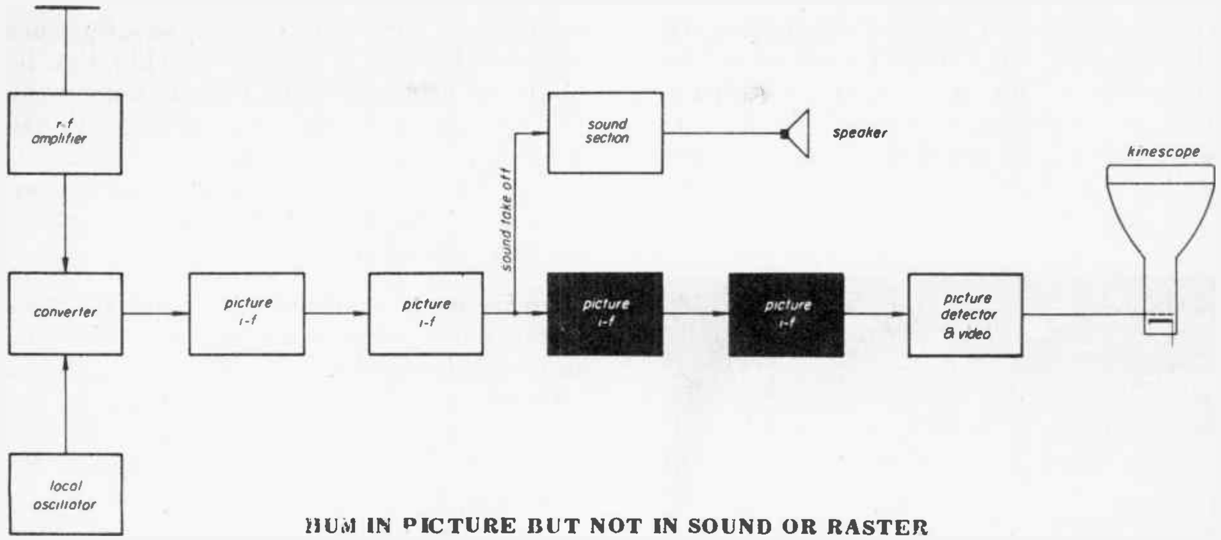

HUM IN PICTURE BUT NOT IN SOUND OR RASTER

Fig. 30-33

local oscillator combines with the picture r-f signal in the converter. This produces the picture i-f signal. Hum introduced in the oscillator combines with the signal generated by the oscillator, and the hum is then combined with the picture i-f signal in the converter.

Hum in the Picture but not in the Sound. This means that the hum has combined with the picture in a stage that follows the sound take-off point in the receiver. The position of the sound take-off point varies in different models. A typical case is illustrated in Fig. 30-33. The black blocks are those in which "hum in the picture but not in the sound" could have been introduced.

Hum in the Sound and in the Picture. This indicates that the hum was introduced in a stage that precedes the sound-take off point. In the block diagram of a typical receiver (Fig. 30-34), the hum could have been introduced in any of the black blocks.

Hum Bend in Picture and Bars. When hum combines with the picture signal, it

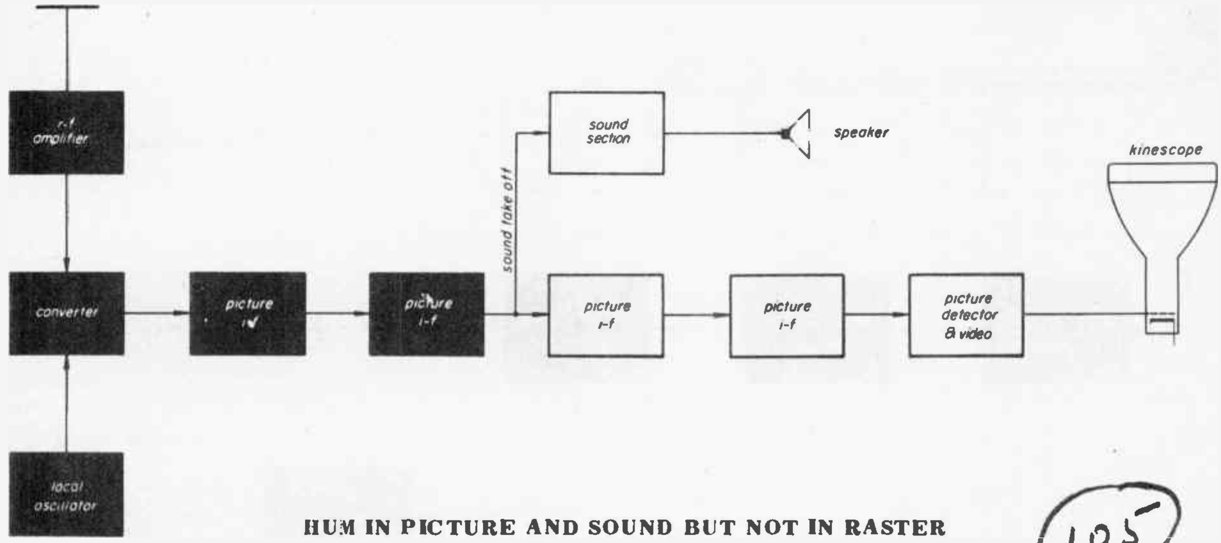

HUM IN PICTURE AND SOUND BUT NOT IN RASTER

105

Fig. 30-34

may also combine with sync. Therefore the picture signal hum can produce bend in the picture due to hum in the sync, in addition to bars in the picture produced by hum voltage at the kinescope grid. This is illustrated in Fig. 30-35, showing bars and bend in the picture.

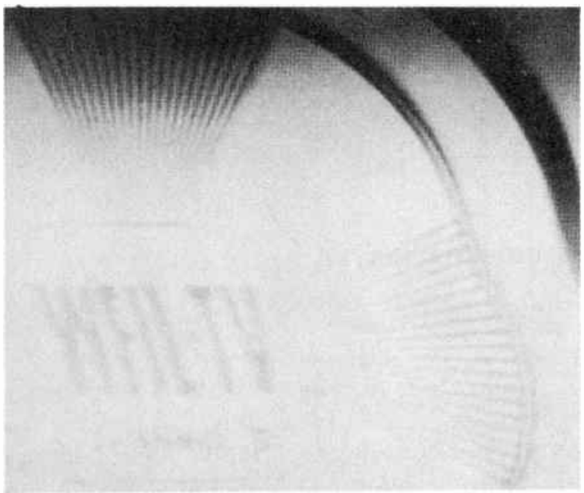

HUM BARS AND BEND IN PICTURE

Fig. 30-35

Hum Bars in Picture but No Bend. It is possible to have bars but no bend in the picture. This happens when the hum causing the bars is not strong enough when it gets to the sync circuit to reduce the amplitude of sync to zero at anytime. This can be seen in Fig. 30-32, which shows bars in the picture produced by hum voltage at the kinescope grid, but there is no bend because the hum voltage in the sync circuit is not strong enough to reduce sync to zero at any time.

Hum Bend in the Picture but No Hum Bars. Fig. 30-31 indicates that the hum has combined with sync at a point which follows the sync takeoff point, in the sync amplifiers or horizontal control stage. These stages are in the black blocks of Fig. 30-36.

It is possible to determine in which stage of the sync circuits hum has been introduced by removing the tubes one at a time. After each tube is removed, the horizontal hold control and horizontal oscillator adjustments are carefully adjusted until the picture is stopped manually. If the bend has then disappeared, the trouble is located at this or an earlier stage.

Hum is not the only cause of bend or tearing in the picture; noise or picture information in the sync circuits can also result in these effects, but will be discussed in later lessons.

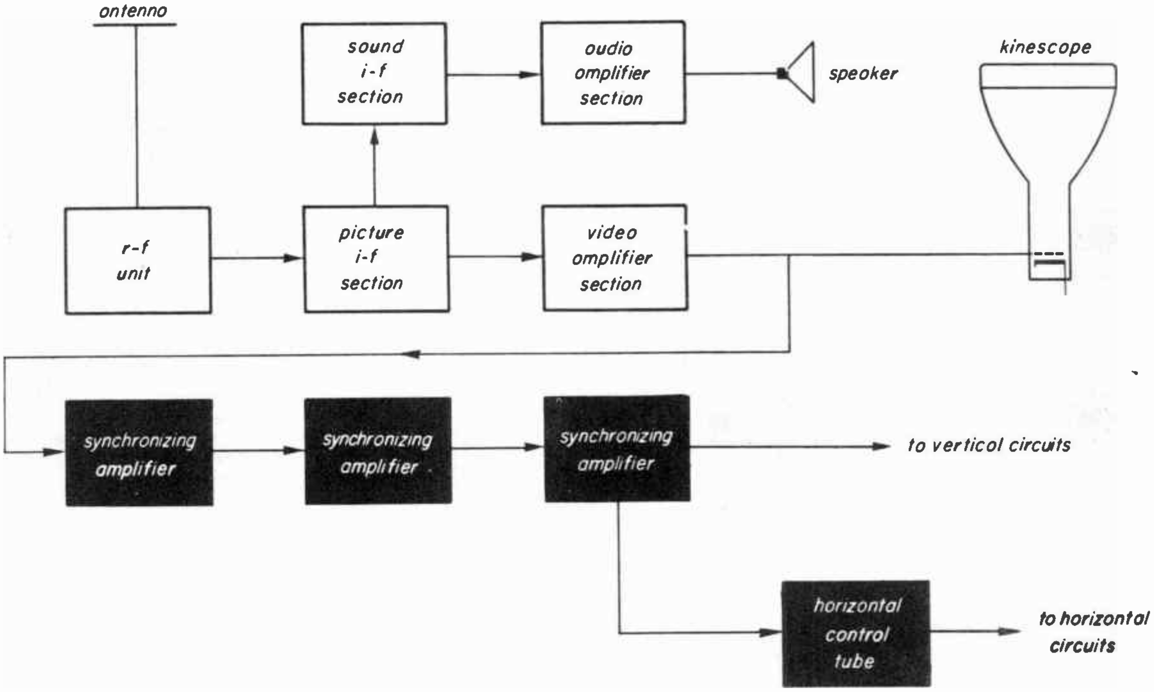

HUM BEND IN PICTURE BUT NO HUM BARS — NO HUM IN RASTER

Fig. 30-36

HUM IN THE VERTICAL CIRCUITS

30-11. The relationship between hum frequency and vertical deflection frequency determines the number of bars or ripples on the screen. But, as we pointed out previously, it is not the presence of hum voltage in the vertical circuits which makes the bars and ripples. In this section we will discuss what happens when the hum voltage is actually in the vertical circuits. The vertical deflection section of a television receiver is divided into two parts. The first part is the vertical oscillator circuit, which generates the vertical deflection voltage at the proper frequency. Normally, the frequency of the vertical oscillator is synchronized by the vertical sync pulses. If it is not synchronized, the picture rolls up or down. If a strong hum voltage is applied to the vertical oscillator, the *hum* synchronizes the oscillator. The result, shown in Fig. 30-37, is a picture rolled out of its proper position and then held stationary. It remains stationary in the wrong position because the hum voltage has synchronized the vertical oscillator. This effect usually accompanies hum in the picture.

HUM IN THE VERTICAL OSCILLATOR

Fig. 30-37

The second part of the vertical section is the vertical output amplifier circuit. A 60-cps sawtooth waveform is the normal input to the vertical output circuit. Fig. 30-38 shows the deflection produced when the 60-cps sawtooth is removed and a 60-cps hum waveform substituted in its place. The picture is folded over itself, because of the sine-wave deflection signal. There is no ripple or bar produced. Notice that the 60-cps sine wave voltage could be deliberately applied to the vertical output circuit as a test to determine if it were operating. Such a test would show whether a trouble causing no vertical deflection is located in the vertical oscillator or in the vertical output section of a receiver.

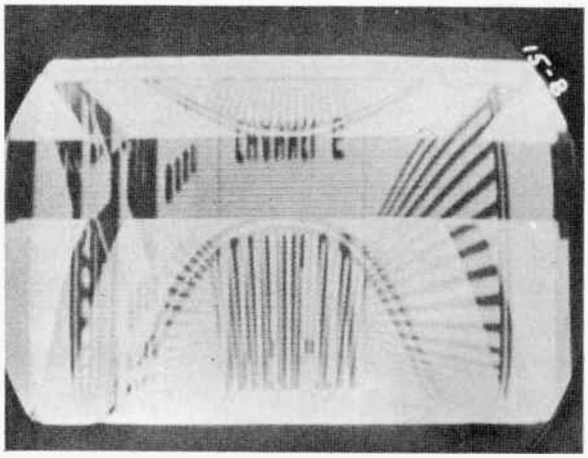

60 CPS. SINE WAVE VERTICAL DEFLECTION

Fig. 30-38

HUM IN THE SOUND

30-12. We have discussed cases in which hum in the sound is accompanied by hum in the raster or hum in the picture. Now, suppose there is hum in the sound but no hum in the picture or raster. It is safe to assume that this hum is caused by filament voltage in the sound stages. If it were caused by ripple in the d-c supply voltages, there would also be hum in the picture and raster.

Localizing Sound Hum. The audio-amplifier drives the loudspeaker. Any audio-frequency voltage applied to the audio amplifier is amplified, and a sound is produced in the speaker. The hum frequencies are audio frequencies. Therefore, the audio amplifier responds directly to hum frequencies. Hum introduced in the audio amplifier can be heard from the speaker with or without the sound signal from the television broadcast station.

The sound i-f amplifier does not respond to hum frequencies. Hum introduced in the sound i-f amplifiers can only pass through if it is combined with the sound signal from the station.

If there is no hum on the screen but hum in the sound is present with no sound from the television station, the trouble is in the filament circuits of the audio amplifier (Fig. 30-39).

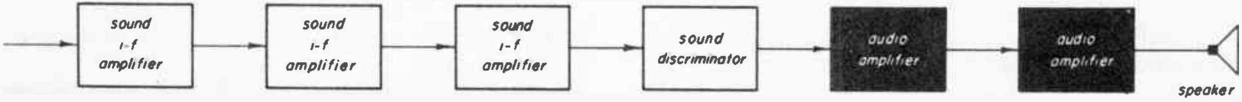

HUM ONLY IN SOUND, PRESENT WITHOUT INCOMING SIGNAL

Fig. 30-39

If there is no hum on the screen and hum in the sound is present only when the sound signal from the television station is present, the trouble is in the filament circuits of the sound i-f amplifiers (Fig. 30-40).

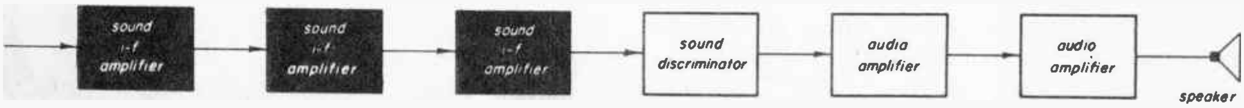

HUM IN SOUND, PRESENT ONLY WITH INCOMING SIGNAL

Fig. 30-40

One type of hum which may appear in an audio amplifier does not originate from either the filament supply or ripple in the d-c supply. This occurs when the shield of the wire connected to the amplifier input becomes ungrounded. With the shield ungrounded, no shielding action takes place. The small amount of energy in the field surrounding the 60-cycle power wiring is picked up by the unshielded wire and amplified. Often the correction for this is merely a matter of replacing an audio plug in its socket so that it makes good contact to the chassis ground.

DIATHERMY AND SYNC BUZZ

30-13. The incoming a-c, a-c ripple on the rectified voltage, and filament a-c are not the only causes of various effects which might be called hum.

Hum Effects Caused by Diathermy Interference. Interference from diathermy machines can produce a symptom very similar to hum, as illustrated in Fig. 30-41. This is because hum modulation is present in the signal produced by a diathermy machine during normal operation. However, diathermy interference is usually not present on all channels. At least it is not strong on all channels. Also, there are fuzzy top and bottom edges on the hum bar resulting from diathermy unless the interference is very strong. These characteristics help to distinguish it from hum caused by a trouble inside the receiver.

Sounds Similar to Hum. The howl caused by microphonics, and buzzing sounds such as sync buzz are not often mistaken for hum by the service technician. These sounds are sufficiently different from each other to be recognizable. However, a customer in describing a trouble might describe the hum as a buzz or howl. It is advisable to keep this in mind when evaluating a customer's description of trouble.

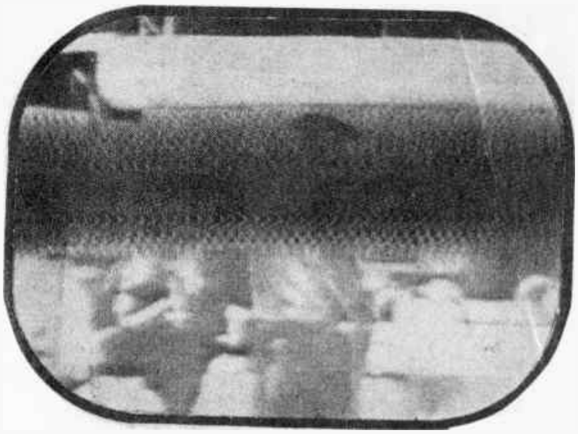

Fig. 30-41

◆

NOTES

NOTES

NOTES

FIRST AID TREATMENT FOR ELECTRIC SHOCK

I. FREE THE VICTIM FROM THE CIRCUIT IMMEDIATELY.

Shut off the current. If this is not **immediately** possible, use a dry nonconductor (rubber gloves, rope, board) to move either the victim or the wire. Avoid contact with the victim. If necessary to cut a live wire, use an axe with a dry wooden handle. Beware of the resulting flash.

II. ATTEND INSTANTLY TO THE VICTIM'S BREATHING.

Begin resuscitation at once on the spot. Do not stop to loosen the victim's clothing. Every moment counts. Keep the patient warm. Wrap him in any covering available. Send for a doctor. Remove false teeth or other obstructions from the victim's mouth.

RESUSCITATION

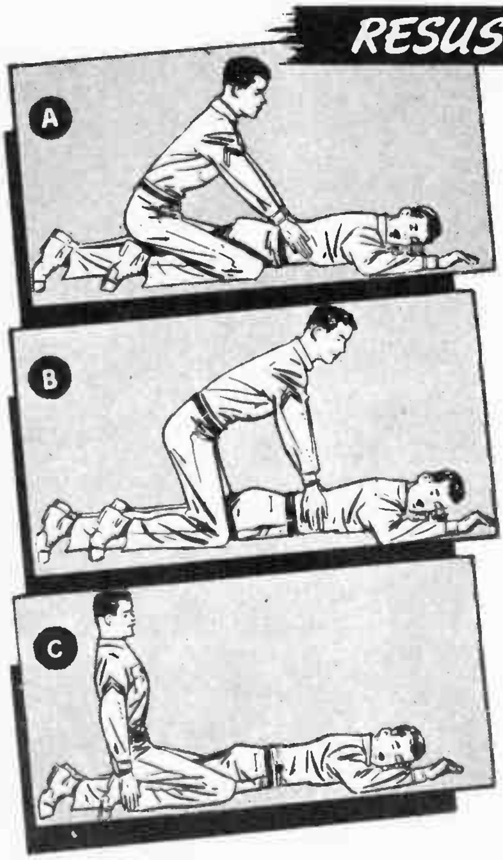

POSITION

1. Lay the victim on his belly, one arm extended directly overhead, the other arm bent at the elbow, the face turned outward and resting on hand or forearm, so that the nose and mouth are free for breathing (fig. A).
2. Straddle the patient's thighs, or one leg, with your knees placed far enough from his hip bones to allow you to assume the position shown in figure A.
3. Place your hands, with thumbs and fingers in a natural position, so that your palms are on the small of his back, and your little fingers just touch his lowest ribs (fig. A).

FIRST MOVEMENT

4. With arms held straight, swing forward slowly, so that the weight of your body is gradually brought to bear upon the victim. Your shoulders should be directly over the heels of your hands at the end of the forward swing (fig. B). Do not bend your elbows. The first movement should take about 2 seconds.

SECOND MOVEMENT

5. Now immediately swing backward, to remove the pressure completely (fig. C).
6. After 2 seconds, swing forward again. Repeat this pressure-and-release cycle 12 to 15 times a minute. A complete cycle should require 4 or 5 seconds.

CONTINUED TREATMENT

7. Continue treatment until breathing is restored or until there is no hope of the victim's recovery. Do not give up easily. Remember that at times the process must be kept up **for hours.**

8. During artificial respiration, have someone loosen the victim's clothing. Wrap the victim warmly; apply hot bricks, stones, etc. Do not give the victim liquids until he is fully conscious. If the victim must be moved, keep up treatment while he is being moved.

9. At the first sign of breathing, withhold artificial respiration. If natural breathing does not continue, immediately resume artificial respiration.

10. If operators must be changed, the relief operator kneels behind the person giving artificial respiration. The relief takes the operator's place as the original operator releases the pressure.

11. Do not allow the revived patient to sit or stand. Keep him quiet. Give hot coffee or tea, or other internal stimulants.

Cut out page along dotted line.

HOME STUDY
TELEVISION
SERVICING COURSE

PREPARED BY

RCA INSTITUTES, INC.
A SERVICE OF RADIO CORPORATION OF AMERICA

HOME STUDY DEPARTMENT
350 West 4th St., New York 14, N. Y.

UNIT EIGHT

Lesson 31: Part I — THE R-F SECTION
Part II — SERVICING THE R-F SECTION
Appendix — ULTRA HIGH FREQUENCIES

Lesson 32: Part I — PICTURE I-F AND DETECTOR STAGES
Part II — TROUBLESHOOTING THE PICTURE I-F AND DETECTOR STAGES

Lesson 33: Part I — VIDEO AMPLIFIERS
Part II — TROUBLESHOOTING VIDEO AMPLIFIERS

Lesson 34: Part I — AGC CIRCUITS
Part II — TROUBLESHOOTING AGC CIRCUITS

TELEVISION SERVICING COURSE

PREPARED BY

RCA INSTITUTES, INC.
A SERVICE OF RADIO CORPORATION OF AMERICA

HOME STUDY DEPARTMENT
350 West 4th St., New York 14, N. Y.

LESSON THIRTY ONE

PART I — THE R-F SECTION

PART II — SERVICING THE R-F SECTION

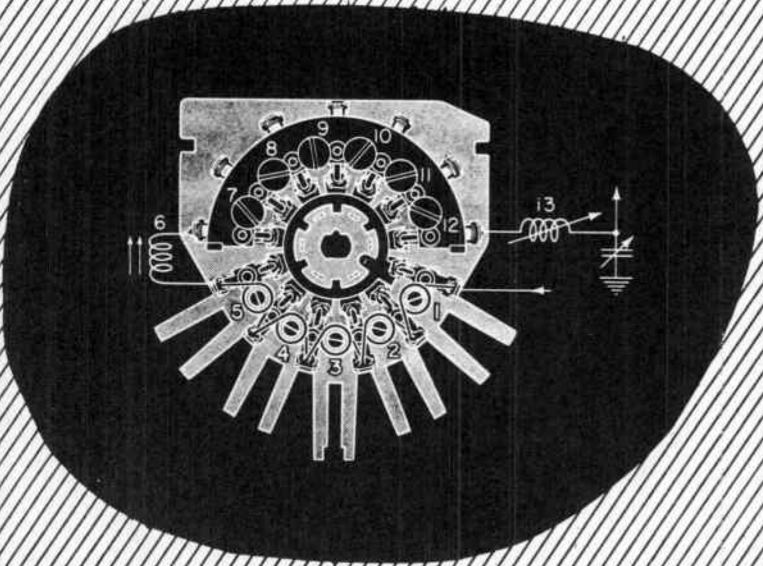

Lesson 31

PART I – THE R-F SECTION

THE R-F UNIT – PURPOSE AND FUNCTIONS

31-1. The first job which must be performed in any television receiver is that of selecting the desired signal. This lesson will describe how the r-f unit not only accomplishes that primary purpose, but also rejects most of the unwanted signals, converts the selected channel to the fixed i-f frequency, and establishes the signal-to-noise ratio (which determines how much snow will appear in the picture).

The Superheterodyne Principle. – You will recall that television receivers operate on the superheterodyne principle. Basically, the r-f unit of the television receiver – which is often called the *front end* or *tuner* – resembles the front end of any superheterodyne. The r-f tuner includes three stages: r-f amplifier, converter, and local oscillator. The arrangement of these stages is shown in the block diagram of Fig. 31-1.

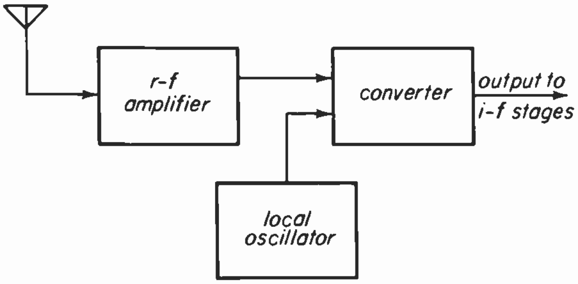

Fig. 31-1

The front end must select the one channel we want to receive from among all the signals picked up by the antenna, provide some amplification, convert the r-f signal to a fixed intermediate frequency, and set the signal-to-snow ratio. Each stage handles a definite part of this job. Here are the basic functions they perform:

1. *LOCAL OSCILLATOR* – generates a sine-wave output which is sent to the converter. *The frequency of the local oscillator determines which channel will be selected (converted to the intermediate frequency and sent through the receiver to produce the desired sound and picture.)*
2. *CONVERTER* – mixes the r-f signal and oscillator output frequencies in a non-linear circuit and selects the proper difference frequency to send to the picture i-f section.
3. *R-F AMPLIFIER* – does a preliminary job of selecting one channel and rejecting the others, then amplifies the desired signal for the converter.

Selecting the Desired Channel. – The superheterodyne television receiver has a fixed intermediate frequency. The i-f stages are tuned to accept a relatively narrow range around this frequency and will reject any signal which falls outside the bandwidth. No matter what channel we want to receive, therefore, the frequency of that channel must be converted to a fixed i-f, or close enough to it to be accepted and amplified by the i-f stages.

The conversion is accomplished by letting the desired r-f signal "heterodyne" or "beat" with the output of the local oscillator. This produces a "difference frequency" (among others) which is equal to the difference between the two original frequencies, and which will be filtered to be sent to the i-f amplifier. In order to make the difference frequency fall within the i-f range, the original frequencies must differ by the amount of the i-f. This can be accomplished by varying the frequency of the local oscillator.

To put it in round numbers, suppose you had a receiver with an i-f of 100 cycles and wanted to receive a signal at 1,000 cycles. You could set the local oscillator to either 900 or 1,100 cycles. In both cases the difference frequency is 100 cycles, which will be accepted by the i-f stages. In television receivers the local oscillator is usually, but not always, tuned *above* the channel frequencies.

With this principle in mind, let's take some actual examples. Assume that the television receiver uses the ordinary intermediate frequencies of 25.75 mc for the picture carrier and 21.25 mc for the sound carrier. Suppose the channel-selector switch is set to Channel 2, which has an r-f picture carrier frequency of 55.25 mc.

The frequency of the local oscillator must be far enough above the frequency of the Channel 2 picture carrier for the difference to equal the intermediate frequency.

Local Osc. Freq. *minus* R-f Picture Carrier Freq. = Picture I-f

Local Osc. Freq. *minus* 55.25 mc = 25.75 mc.

Solving this gives us:

Local Osc. Freq. = 81 mc

An easier way to figure this is simply to add the i-f to the r-f picture or sound carrier frequency.

55.25 mc + 25.75 mc = 81 mc

So the local oscillator of this particular receiver must be tuned to 81 mc to receive Channel 2. But if the intermediate frequency were higher or lower, then the local oscillator frequency would have to be adjusted by the same amount.

In the receiver we're talking about, the sound i-f is 21.25 mc. The frequency of the local oscillator should also beat with the r-f sound carrier of Channel 2 to produce this i-f. The r-f sound carrier frequency for Channel 2 is 59.75 mc. So:

R-f Sound Carrier Freq. *plus* Sound I-f = Local Osc. Freq.

59.75 mc + 21.25 mc = 81 mc

The single local oscillator frequency thus produces the correct picture and sound intermediate frequencies. Since the r-f sound carrier is 4.5 mc above the r-f picture carrier frequency for every channel, television receivers are always designed with the sound i-f 4.5 mc below the picture i-f. If this were not done, two local oscillators would be necessary.

Now, let's turn the channel-selector switch of the same receiver to Channel 8, which has an r-f picture carrier frequency of 181.25 mc and an r-f sound carrier frequency of 185.75 mc.

For the picture carrier:

R-f Picture Carrier Freq. *plus* Picture I-f = Local Osc. Freq.

181.25 mc + 25.75 mc = 207 mc

And for the sound carrier:

185.75 mc + 21.25 mc = 207 mc

Again, the signal local oscillator frequency produces the correct i-f frequencies for both picture and sound. This is true for every channel, as a glance at Table A will show. The local oscillator frequencies shown in Table A are valid only for the case of the oscillator operating *above* the signal frequencies.

TABLE A

Channel	R-F Carrier Freqs. in MC		Local Osc. Freq. for 25.75 &21.25 I-F (MC)	Local Osc. Freq. for 45.75 & 41.25 I-F (MC)
2	Pix Sound	55.25 59.75	81	101
3	Pix Sound	61.25 65.75	87	107
4	Pix Sound	67.25 71.75	93	113
5	Pix Sound	77.25 81.75	103	123
6	Pix Sound	83.25 87.75	109	129
7	Pix Sound	175.25 179.75	201	221
8	Pix Sound	181.25 185.75	207	227
9	Pix Sound	187.25 191.75	213	233
10	Pix Sound	193.25 197.75	219	239
11	Pix Sound	199.25 203.75	225	245
12	Pix Sound	205.25 209.75	231	251
13	Pix Sound	211.25 215.75	237	257

Rejecting Unwanted Channels. — We know that the output of the local oscillator will beat with every frequency present at the converter input and that a difference frequency will be produced for each. If the signals of several channels manage to get to the input of the converter, all the difference frequencies will be produced, but all except the selected one will lie outside the range (sometimes called the *pass band*) of the fixed-tuner i-f stages. (There is an exception to this, which will be discussed shortly.)

Figure 31-2 illustrates what happens in this case. The local oscillator is tuned to bring in Channel 4, but the carrier frequencies of Channels 3 and 5 are also present at the converter input. From Table 31-1 we know that the oscillator frequency of a receiver using the newer picture i-f frequency of 45.75 mc for Channel 4 reception must be 113 mc. This 113 mc signal beats with the Channel 4 r-f picture carrier and produces a difference frequency of 45.75 mc, which is readily accepted by the i-f amplifiers.

As far as the r-f picture carriers of Channel 3 and Channel 5 are concerned, however, the difference frequencies are 51.75 mc and 35.75 mc, respectively. One is too high and the other too low to be accepted by the i-f stages.

The net result is that when the local oscillator is correctly adjusted to tune in a given channel, the r-f picture and sound carriers of that channel are converted to the picture and sound intermediate frequencies, of the receiver. All the signal frequencies in the selected channel are converted to frequencies within the acceptable i-f range, so that no information impressed on the carriers is lost. Any frequencies that are present but not in the selected channel produce difference frequencies which usually lie outside the range of the i-f section and are therefore rejected

From this it's clear that *the channel selected depends upon the frequency of the local oscillator.*

THE LOCAL OSCILLATOR

31-2. Generating and Controlling Oscillation. – The oscillator is simply an amplifier with feedback, in which the action is self-sustaining as long as the operating voltages are applied, because part of the plate-circuit output is constantly fed back to the grid circuit. Two factors are particularly important, as far as feedback is concerned. First, it must be *in the proper phase,* to reinforce the action of the tube. Second, the amount of feedback must be sufficient to more than make up all the losses in the oscillator circuit. Otherwise, oscillation would stop because no useful feedback would appear at the grid to be amplified. One other factor – there must be enough useful output power to supply the requirements of the converter at all operating frequencies.

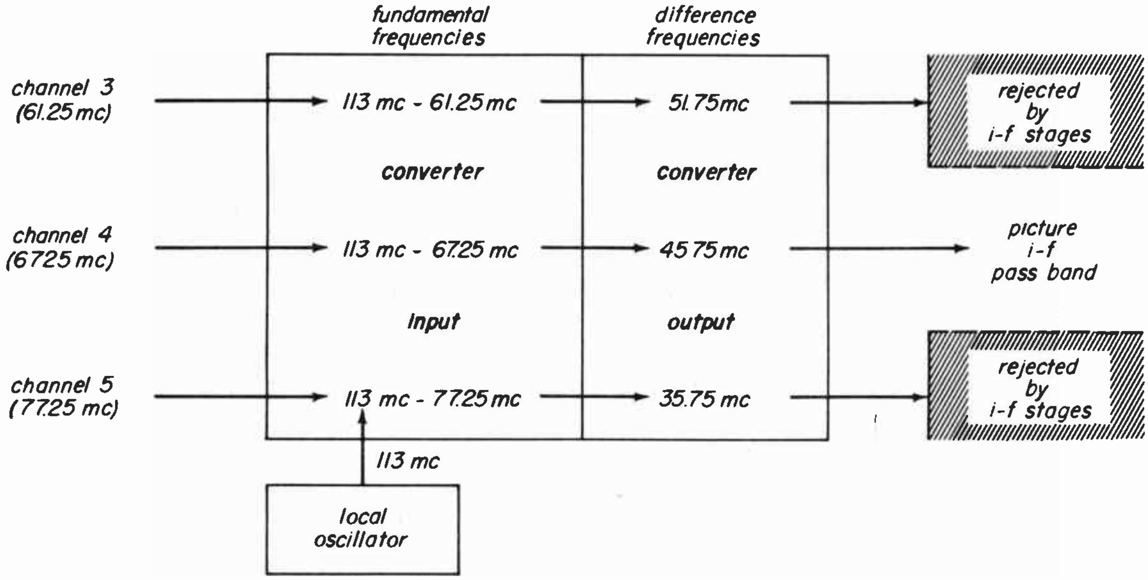

Fig. 31-2

There are a great number of oscillator circuits in use, employing various means of feedback, including inductive, capacitive, or a combination of the two. Whatever method is used must produce a phase shift of 180 degrees between plate and grid, to put the feedback voltage in phase with the grid voltage so that they will *add* and be amplified. Generally, some sort of voltage-divider effect is necessary, to separate a portion of the output, which can then be fed back to the grid circuit.

Fig. 31-3 shows two basic oscillator circuits and demonstrates that it is not always easy to recognize an oscillator from its appearance on the schematic. At *A* is shown the basic Colpitts oscillator, which can be recognized in all variations by the capacitive voltage divider, C_p and C_g. The voltage developed across C_g is applied across grid and cathode to sustain oscillation. The circuit *B*, however, uses the plate-grid capacitance of the tube as a feedback path, as indicated by the dashed lines. This would not show up on a schematic, of course, and the circuit then looks very much like a straight amplifier, except that no external signal is applied to the grid circuit and that signal bias (grid leak bias) is used.

To fulfill the requirements of the tuner, the local oscillator must not only generate a signal, but control the amplitude and frequency of it. For the very high frequencies necessary to heterodyne with the signal of the desired channel, tuned resonant circuits are almost always used to determine the frequency of oscillation. A high-Q parallel-resonant circuit offers maximum impedance at its resonant frequency, closely matching the output impedance of the tube and enabling oscillations at that frequency to develop the highest voltage across the tank. At other frequencies the impedance is relatively low as compared with the tube impedance, so the development of harmonics and parasitics is reduced to a minimum.

Basically, then, the local oscillator has three jobs to do:

1. Generate a signal, whether or not there is a signal coming in from the antenna.

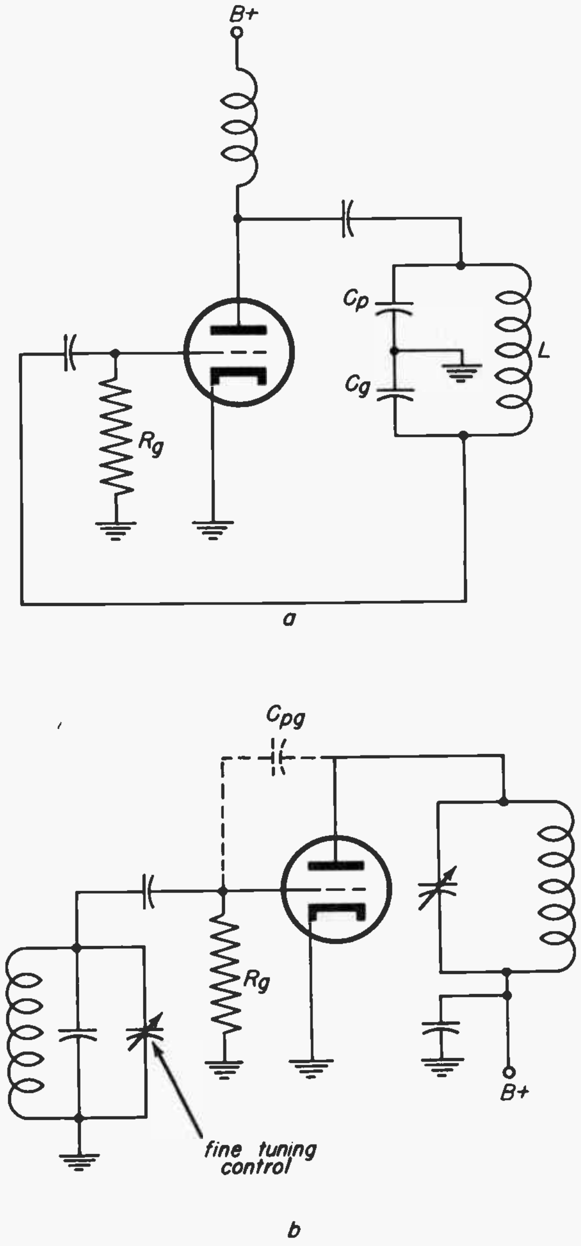

a

b

Fig. 31-3

2. Develop a bias for itself.
3. Determine the frequency of its signal, by means of the inductance and capacitance in its tank circuit.

Stabilizing the Oscillator Frequency. – The frequency of any oscillator has a tendency to *drift* – that is, to change gradually, due to temperature, voltage or load changes, or mechanical vibration.

Temperature changes as the set warms up change the spacing of the vacuum-tube electrodes slightly, resulting in small differences in the interelectrode capacitances which affect the resonant circuits. Temperature changes in coils and capacitors vary the values of inductance and capacitance, with similar results. Variations in plate voltage or in the load can cause a frequency shift, but this effect is considerably reduced when we use a high-Q tank circuit with a low L/C ratio for maximum stability.

Microphonics. – Mechanical variation or vibration anywhere in the oscillator circuit can cause values of inductance or capacitance to change slowly or rapidly. Probably the most common cause of *microphonics*, as this effect is called, is the oscillator tube. Vibrations picked up by the tube electrodes cause small changes in the interelectrode capacitances which shunt the tuned circuits, resulting in a rapid variation of the resonant frequency. (Note that this is separate from the effect of temperature upon the tube.) Oscillator tubes are frequently mounted with heavy lead shields, to help damp out any vibration that might otherwise be picked up. Other parts can become microphonic, however, as well as the tube. For instance, if capacitors or resistors are mounted with long leads, they can vibrate enough to change the normal stray capacity between their leads and the chassis.

The intercarrier system used in the newer receivers has practically eliminated microphonics as a servicing problem. The reason for this is that the sound carrier goes through all four stages of the picture i-f amplifier at a sound i-f of 41.25 mc, then is reduced to a *second sound i-f* at 4.5 mc by letting the first sound i-f beat with the picture i-f in the second detector. The resulting 4.5 mc difference frequency contains audio information which we can extract with an FM detector. Since the 4.5 mc difference between the sound and picture carriers is always established by the transmitter, the sound is relatively independent of local oscillator drift in this system. When the oscillator frequency changes, the sound and picture i-f carrier frequencies change, but are still separated by 4.5 mc.

Some frequency drift in the oscillator is normal, but it is almost always undesirable, especially when we're using the oscillator for heterodyne purposes. If the local oscillator is not very stable in this respect, the picture is affected and the sound may be lost altogether. In the intercarrier system this trouble is eliminated. In older sets, however, the sound i-f pass band is much narrower than that of the picture i-f stages; therefore too much oscillator drift may cause the difference frequency (between the oscillator and the r-f sound carrier) to fall outside the acceptable bandwidth of the sound stages. When this happens, the difference frequency is also far enough away from normal to get past the sound rejection traps in the picture i-f amplifiers, which results in sound bars appearing on the kinescope.

To reduce this objectionable effect, the oscillator is designed for the maximum practicable stability and a fine-tuning control is included on the front-panel. This control, which is usually a small capacitor (Fig. 31-3), makes it possible to tune the oscillator over a small range (1 to 2 mc is common) to the exact frequency required. Since the sound is most affected in the older receivers, it's easy to tune these models for the best sound, then make a final small adjustment (if necessary) to get the best picture. Models using the intercarrier system should be fine-tuned for the best picture.

Several methods are used to make the oscillator more stable. A fairly large value of capacitance (low L/C ratio) in the resonant circuit helps to minimize the effects of variations in the tube capacity and reduce microphonics, because the tube capacity is then only a small part of the total. Good regulation of the d-c power supply is also important to keep the d-c plate voltage steady. Temperature-compensating capacitors are widely used. The capacitance of ordinary fixed capacitors decreases as the unit heats up, but special capacitors with negative *temperature coefficient* give the opposite result. When one of these is connected in parallel with a common type, the effective capacitance remains approximately the same over a wide temperature range, since one increases in value when the other decreases.

Certain oscillator circuits are naturally more stable than others. The Colpitts circuit shown at *A* of Fig. 31-3 is one of these and is commonly used. It is relatively free from harmonics .

Any of the basic oscillator circuits may be operated single-ended, in push-pull or in parallel. A well-designed push-pull circuit oscillates easily, even at reduced plate voltages, has excellent frequency stability and low harmonic content in the output waveform. The earlier RCA front-end tuners (KRK-7 and below) using both halves of a 6J6 twin-triode in push-pull provided good characteristics and minimum ill effects from temperature or other changes in the tube capacities because these capacities are in series. In the later single-ended Colpitts circuit stability is obtained through the low L/C ratio and less *total* power is required from the oscillator because the output is directly coupled through a capacitor to the converter, instead of through a link. Hence, the 1/2 6J6 gives the required power and the circuit is simpler.

Changing Oscillator Frequency. – Let's take another look at the Colpitts circuit shown at *A* of Fig. 31-3. Since the values of *L* and *C* in the tank circuit determine the output frequency of the oscillator, we can change the frequency to tune in different channels by varying *L*, C_p or C_g. If we change C_p, however, we will have to readjust C_g – and vice versa – because the voltage-dividing ratio will be upset and readjustment becomes necessary to get just the right amount of feedback at the new setting. If we wish to tune 12 channels from a single front-panel operating control, this would require a dozen pair of capacitors and the job of alignment would be tough.

Suppose, then, we try varying the inductance of *L*. This is practical and easy to do in any of several ways. At first glance it seems as if we would have to add or subtract capacitance each time we change the inductance, in order to maintain the L/C ratio, but this is taken care of in the coil design. The distributed capacitance between the turns of a coil acts like a single capacitor in shunt with the inductance. So, in the oscillator tank, we can wind the coil or coils to

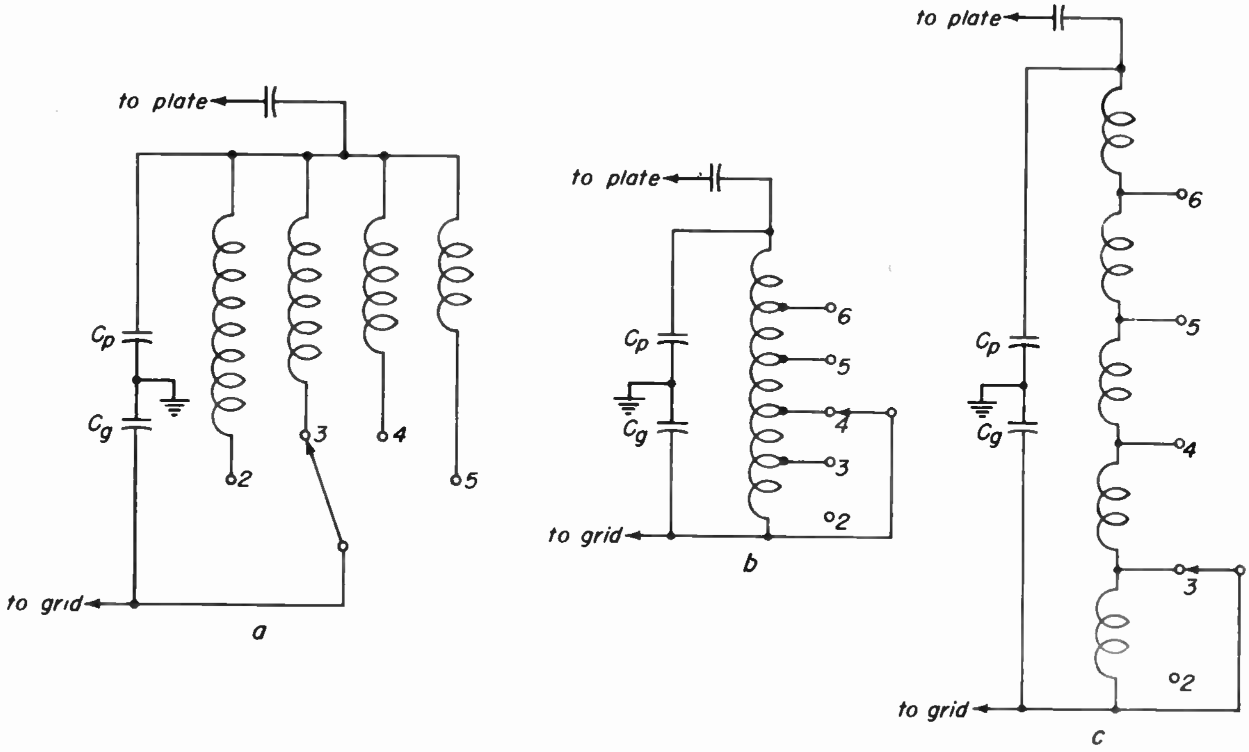

Fig. 31-4

have any desired value of distributed capacitance. If we switch in more turns to add inductance, the correct amount of capacitance is automatically included. C_p and C_g need be only large enough to supply the necessary feedback.

Fig. 31-4 shows some of the arrangements we can use to vary the inductance. At *A* is a system which switches in a different coil for each frequency. This is usually done on a turret, in order to keep the leads as short as possible and reduce losses. An example is the Standard Coil turret tuner shown in Fig. 31-5.

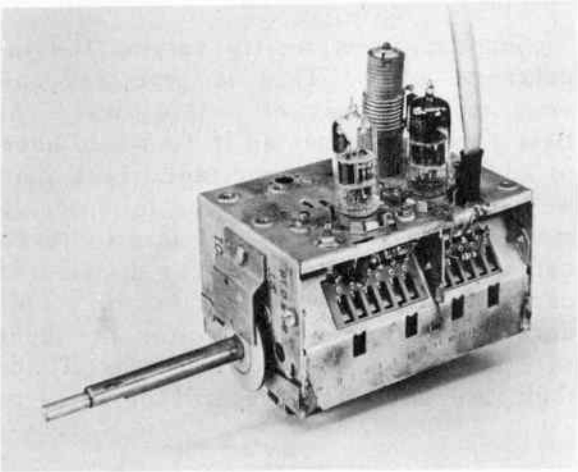

(a) Top View

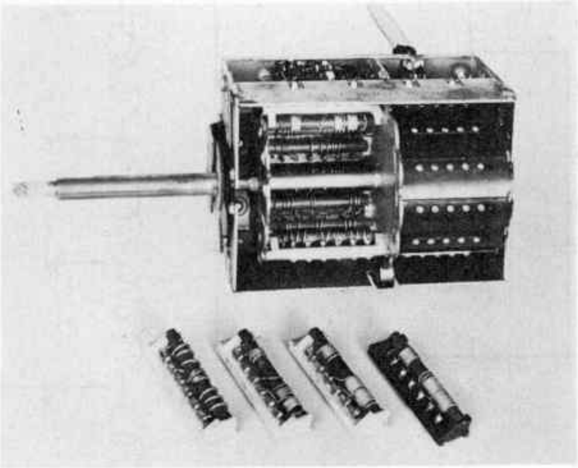

(b) Bottom View

Fig. 31-5

The circuit shown at *B* is another possibility. Here, only a single coil is used, large enough to provide the maximum inductance needed to tune the lowest oscillator frequency and tapped at various points. The switching arrangement simply makes it possible to short out the extra inductance (and distributed capacitance) channel by channel as we progress toward the higher frequencies. At position 2, all the inductance is in the circuit and the oscillator is tuned to the correct frequency to select Channel 2. When the switch is turned to positions 3, 4, 5, etc., portions of the inductance are shorted out and the oscillator operates on a correspondingly higher frequency. The switch we use to accomplish this is one section of the channel-selector switch, controlled from the front panal.

The drawing at *C* of Fig. 31-4 is exactly the same electrically as that at *B*. Instead of using one coil, tapped at the desired inductance points, we can use a set of small coils, connected in series. Each of the small coils is wound to provide the same inductance as the corresponding section of the large coil. There are two principal advantages to this arrangement. It enables us to mount the small, self-supporting coils right on the switch wafer, as shown in Fig. 31-6, resulting in mechanical convenience and a maximum saving of space. More important, however, is the fact that the leads are reduced to the shortest practicable lengths, consisting only of the soldering lugs and the switch contacts. This cuts down the losses which normally appear on TV frequencies in leads of any appreciable length. Therefore, this arrangement is not only a space-saver, but improves the circuit efficiency. The parallel-resonant tuning circuits of the r-f amplifier and converter stages are laid out in the same manner and all the switch wafers are ganged on a single shaft.

The inductances (and *distributed* capacitances) for only the first 11 channels are mounted on the switch wafer. The coil required to tune Channel 13 is always in the circuit, so it can be mounted separately. It is often wound on a small

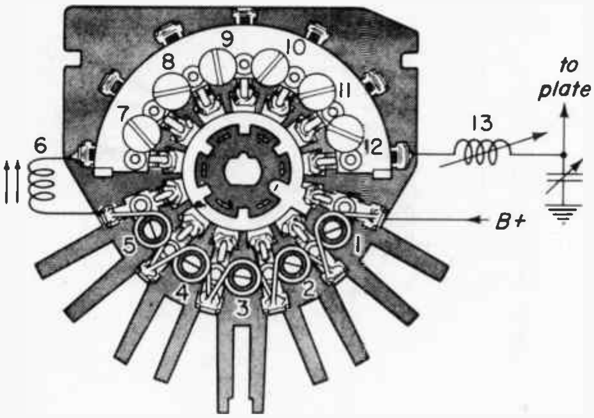

Fig. 31-6

form, inside which is a variable capacitor used to adjust the L/C ratio for proper tracking at all frequencies, as indicated in Fig. 31-6, which shows the wafer for the 630 chassis (including a coil for Channel 1). In the KRK-2 r-f unit, this variable capacitor was omitted and the Channel 13 coil was tuned by means of a brass slug, but adjusting the coil in this manner meant that all the other channels had to be re-adjusted. In all later units the variable capacitor has been employed. Tuning of the other coils for alignment is accomplished by means of brass slugs with slotted heads which can be screwed in or out to adjust the effective inductance of each coil by changing the magnetic field. The capacitance is also somewhat changed.

You've probably noticed that only 6 actual coils are mounted on the switch wafer – those numbered 1 to 6 in Fig. 31-6. These coils are switched into the circuit one at a time to add the necessary inductance to tune Channels 1 to 6. For tuning the higher-frequency channels, however, (and especially when the new UHF channels are allocated), we seem to have nothing more than a strip of metal, curved to fit the wafer and studded with 6 brass screws. The answer is that this is one side of a resonant line section which we use to tune Channels 7 through 12. The other side of the line section is mounted on a second switch wafer, which in the case of a push-pull oscillator circuit also carries 5 more actual coils. If the oscillator is a single-ended, the other side of the line section is connected in the grid circuit of the converter. In either case, the two sides of the resonant section must be mounted parallel and a short distance apart.

Resonant Line Section as Circuit Elements. – To understand the action of a resonant line section used as a circuit element, it's necessary to recall or review the discussion of line sections in Lesson 20. In that lesson you learned that *a quarter-wave section of line, short-circuited at the receiving end, behaves toward the source like a parallel-resonant circuit.* In other words, the line section offers a very high, resistive impedance to the source at the resonant frequency, it stores energy and it requires little power from the source to maintain this condition. The frequency of resonance depends upon the *electrical* wavelength of the line section.

The curve of impedance for the shorted quarter-wave line section looks like this:

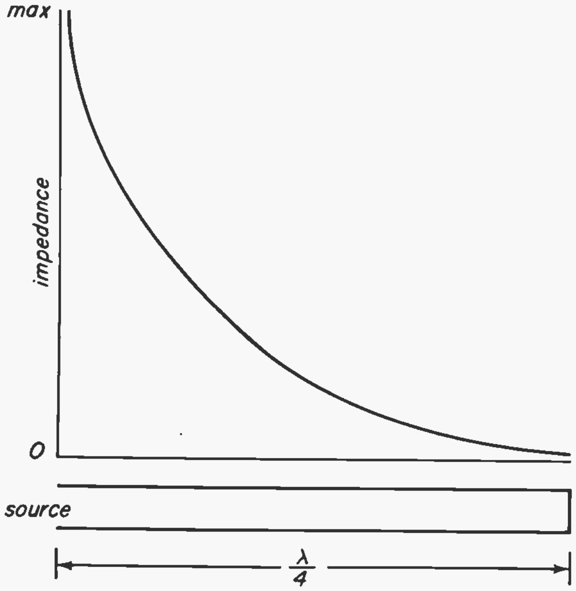

Fig. 31-7

This indicates that the impedance varies from maximum at the open source or sending end to nearly zero at the shorted receiving end. The curve is very much like that of a parallel-resonant circuit and there is no reason why we can't use the resonant line section in the same

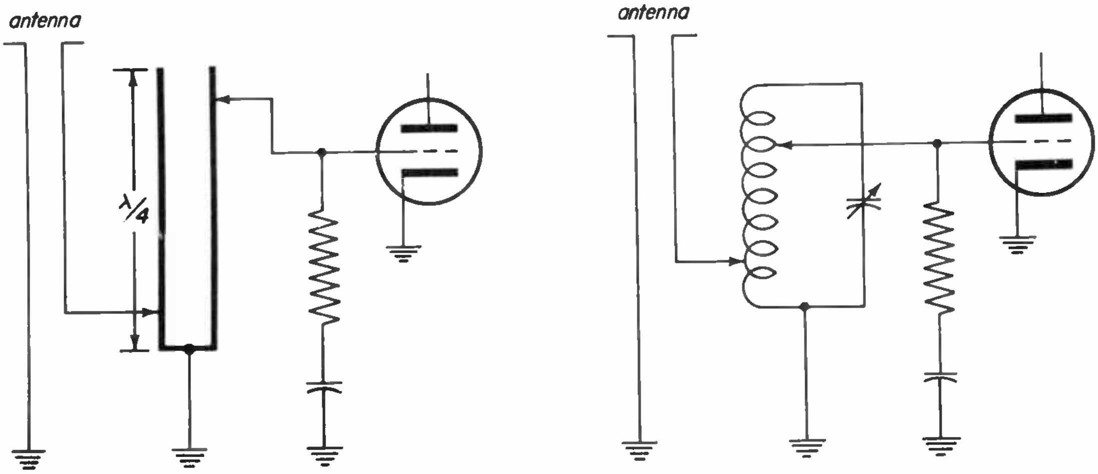

Fig. 31-8

manner, for a tank circuit. In fact, we can tap down on a line section to match impedances just as we tap down on a conventional coil. For instance, here are two circuits which are electrically equivalent:

The input circuit on the right is a common one – we've seen it often enough. The circuit on the left accomplishes exactly the same purpose. The only important difference is that the resonant line section is tuned by adjusting the position of the shorting strap, instead of by varying a capacitor. The antenna line is matched by simply tapping down on the section to a point which presents the desired impedance and grid matching is similarly done. Since the impedance of the antenna line is relatively low and that of the grid quite high, the connections are made as shown to give the best matches. Notice, however, that it makes no difference where these taps are placed as far as the resonant frequency is concerned – this depends only on the length of the section from the open end to the shorting strap.

Line sections are widely used as circuit elements at the higher frequencies because they are more efficient than the usual coils and capacitors due to lower losses. We can also obtain higher L/C ratios – and consequently higher Q – with the line sections. Often, silver-plated tubular conductors are used for resonant line sections, but in the RCA front ends the flat strips shown in Fig. 31-6 are shaped to fit on the switch wafers. When the two wafers are mounted on the common shaft, the proper distance apart, the two sides of the line section are parallel and normal operation results. The shorting strap is connected between the switch rotors, which enables us to tune the line section by changing the effective length, like this:

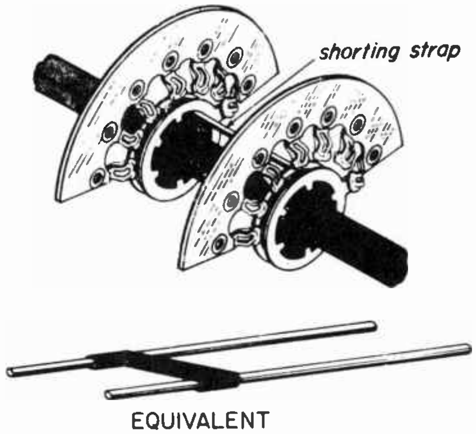

Fig. 31-9

Now, suppose we consider the plate circuit of a push-pull oscillator, which is shown schematically at *A* of Fig. 31-10. At the lower frequencies this circuit is useful and we can adjust the operating frequency by changing the position of the shorting switch, which adds inductance and (distributed) capacitance to the tank circuit when we move it to the left.

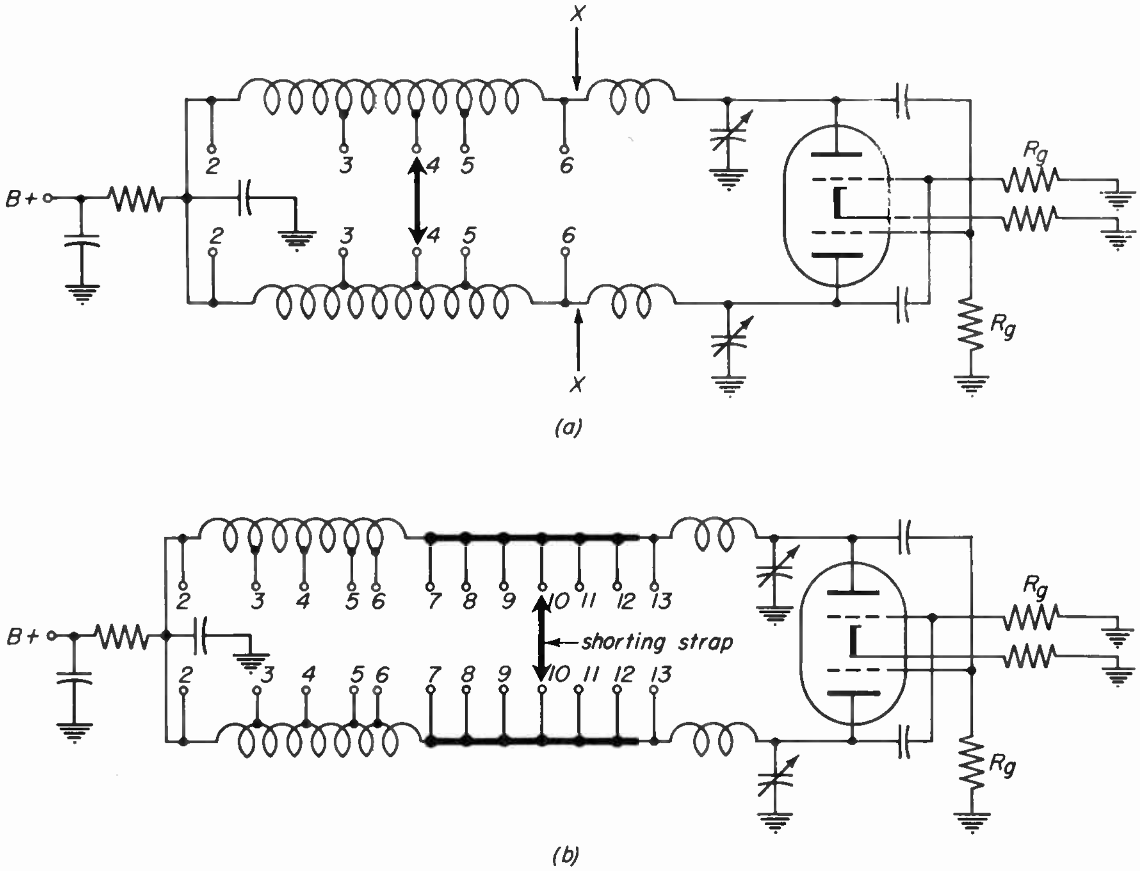

(a)

(b)

Fig. 31-10

For better efficiency at the higher TV frequencies, however, we decide to use a resonant line section. We could use a section to tune all the channels, but it would be very long and awkward. Instead, we insert at the points marked *X* on the drawing a line section which is long enough to tune down to Channel 7 and we use small coils to get the added inductance for the lower channels, as we saw in Fig. 31-6. This arrangement, shown at *B* of Fig. 31-10, looks like a hybrid, but electrically it makes no difference. Whether you consider it a line section in series with a tapped coil, or an extra-long line section with one end coiled up for convenience, the electrical result is a parallel-resonant circuit which enables us to vary the oscillator frequency over the required range. The screw studs protruding from the line section provide a means of varying the capacitance and inductance for alignment purposes.

For your convenience in following this through into a servicing job, here's the way the oscillator circuit of the RCA KRK-5 front end looks in a schematic:

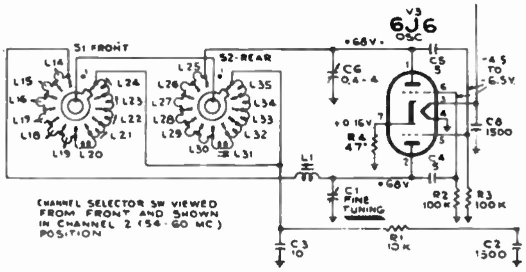

Fig. 31-11

Compare this with drawing *B* of Fig. 31-10, above, and you'll see that it's the same circuit. Then check with Fig. 31-6 and note the actual physical set-up.

Single-Ended Oscillator Circuit. – Fig. 31-12 shows two representations of a single-ended oscillator circuit – the Col-

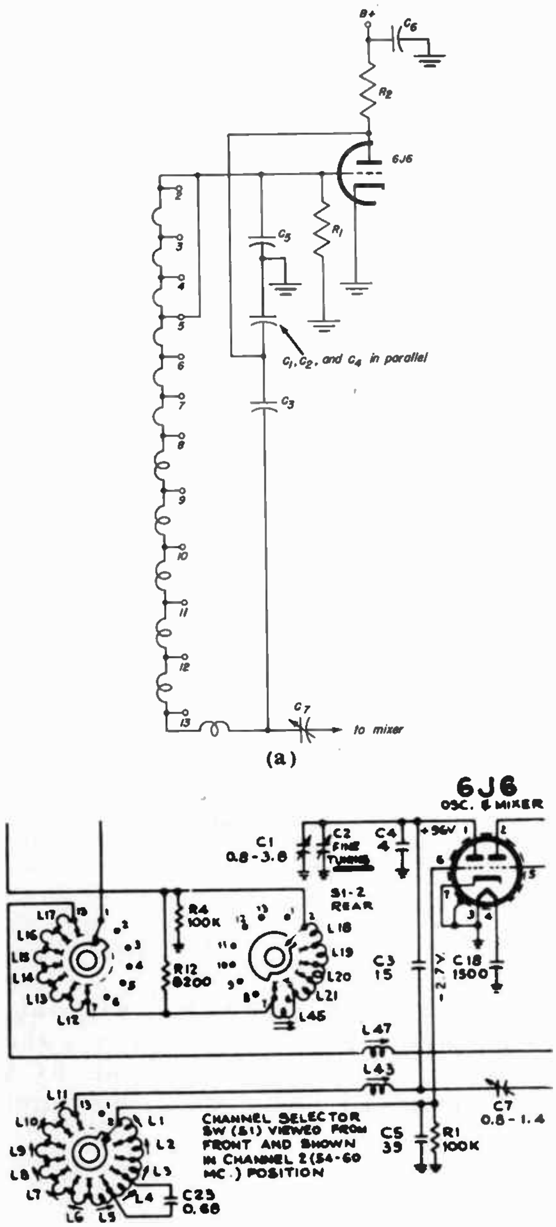

(a)

(b)

Fig. 31-12

pitts oscillator used in the KRK-8 tuner. At *a* is a simplified schematic of the oscillator circuit alone; this tuner uses a 6J6 as a combined oscillator-mixer, as you can see at *b*. In the oscillator tank circuit, we have only a single switch wafer, which has the 6 small coils (5, in newer models) for the lower-frequency channels, plus the metal strip which we've previously regarded as one side of a resonant line section. In this circuit, however, the other side of this line section is missing. We could regard the arrangement as an unbalanced line, with the chassis at ground potential acting like the grounded outer conductor of a coaxial line, but it's simpler to think of the metal strip as a series of half-turn coils which provide the very small inductances required to resonate the oscillator tank at the higher frequencies. The regular schematic is shown at *b*, so you may compare the two.

Continuous Tuning. – Let's consider one more important way of varying the inductance of a tank circuit to change the oscillator frequency. This is shown schematically in Fig. 31-13 and consists of a coil with a tap which is continuously in contact with the winding. This can be accomplished by mounting the coil on a shaft so that one turn touches a sliding contact which follows the winding when the coil is rotated. Thus, instead of switching in lumps of inductance, the value is smoothly varied. One rotation of the shaft shorts one turn; if the coil has ten turns, the entire frequency range is covered in ten rotations.

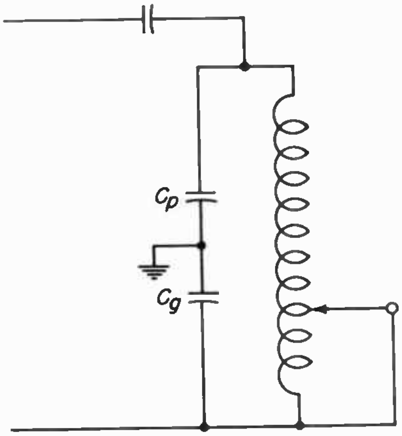

Fig. 31-13

This type of tuning is used in the Mallory *Inductuner,* illustrated in Fig. 31-14. Three individual inductance units are ganged on a single shaft, each giving a high maximum-to-minimum inductance ratio of 50 to 1, which tunes the entire TV frequency range of 54 to 216 mc. Two sections of the tuner are used for preselection in the r-f amplifier plate and converter grid circuits, while the third section is used to tune the local oscillator above the frequency of the desired channel. The tuning is done from the front panel. In some later models, a detent mechanism is included to lock in the shaft at the proper position for each channel. A newer type of individual inductance unit is spiral-shaped, like a watchspring, which gives the same continuous tuning but saves space.

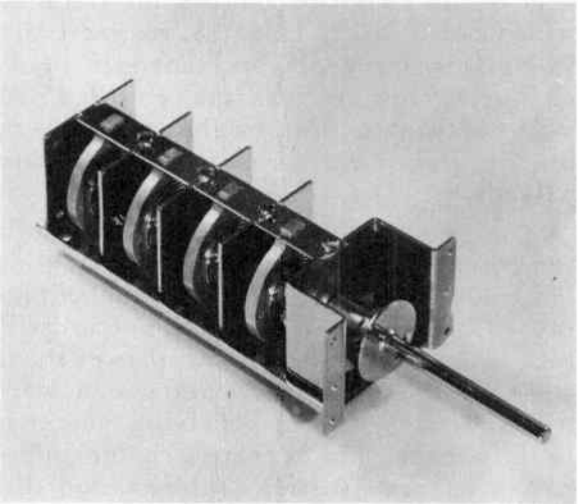

(P. R. Mallory Co.)

Fig. 31-14

Oscillator Bias. – One distinguishing feature of nearly all oscillator circuits is grid leak self-bias. This makes the oscillator self-starting and aids in maintaining a stable amplitude of oscillation. If the amplitude of the oscillations begins for some reason to build up, more grid current flows through the bias resistor, increasing the bias and cutting down the amplification of the tube. If the amplitude decreases, the resultant decrease in bias tends to bring it up to normal again. The operation must be such that a grid current flows for part of the cycle to develop a biasing voltage across the grid leak resistor.

Since the bias is developed by the signal and the oscillator generates its own signal, the presence or absence of the correct bias gives an excellent indication of whether or not the oscillator is operating properly.

Coupling the Oscillator to the Converter. – After generating a signal at the particular frequency we need, a means must be provided to transfer it to the grid of the converter, where it will be mixed with the incoming r-f picture and sound carrier frequencies. This can be accomplished by common coupling methods – capacitance, inductance or direct radiation. (Remember that the oscillator is a small transmitter and some of its power is radiated from any part of the tank circuit which happens to be the right length to act as an antenna at the operating frequency.)

Inductive coupling is frequently accomplished by means of a *link*, which is simply a couple of turns of wire coupled inductively to the tuned circuit and connected by a piece of twisted pair or coax to a similar turn or two coupled inductively to another tuned circuit. The link provides a means of obtaining mutual inductance between two coils which are not otherwise coupled. It is useful where stray capacitive coupling must be held to a minimum, because there is very little capacitance between the link turns and the tuned circuits. In coupling the oscillator to the converter, the link is arranged to give a fairly loose coupling and keep the two circuits as well separated as possible. This is desirable because we want to prevent the signal-frequency circuit from interacting with the oscillator, which could cause changes of the oscillator frequency. This is called "oscillator pulling", but is not likely to become serious when the signal and oscillator frequencies are well-separated. Fig. 31-15 shows the manner in which a link is used for coupling the oscillator to the converter in the KRK-5 front end.

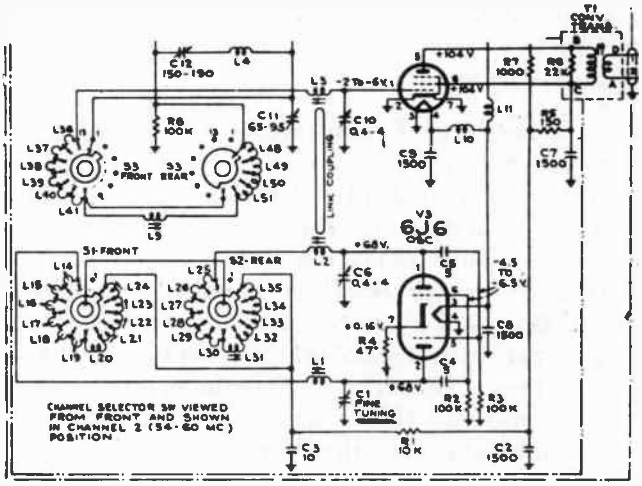

CHANNEL SELECTOR SW VIEWED FROM FRONT AND SHOWN IN CHANNEL 2 (54-60 MC) POSITION

Fig. 31-15

There is also a certain amount of coupling due to the fact that the circuits are close together on the chassis and oscillator radiation is picked up by the converter wiring.

Capacitive coupling is simple and straightforward. The coupling capacitor is usually quite small in value, to keep the degree of coupling loose and prevent oscillator pulling. In the KRK-8 tuner, shown in simplified form in Fig. 31-16, C_7 is the variable, capacitor used for coupling. This can be varied from 0.8 to 1.4 uufd to obtain the most efficient mixing in the converter. Again in this circuit, there is bound to be a certain amount of radiation coupling.

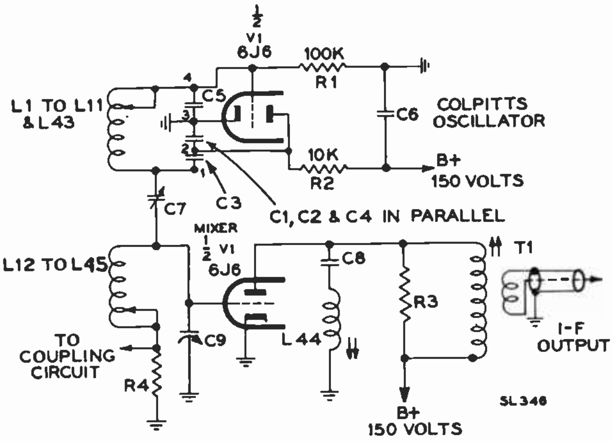

Fig. 31-16

Regardless of the method, or combination of methods, that is used for coupling there must be enough transfer of oscillator energy to provide efficient mixing – and the amount must be fairly constant at all frequencies.

Oscillator Radiation. – We've already noted that the local oscillator is a small transmitter and that direct radiation can take place from the tank circuit and wiring. This radiation doesn't cause any trouble in the receiver of which the oscillator is a part, but if it is permitted to get out to neighboring TV receivers, interference results. Glance back at Table 31-1 and you'll see how this can happen, particularly in the case of receivers using a 25.75-mc intermediate frequency. If such a receiver is set to bring in Channel 2, the frequency of its local oscillator is nearly the same as the r-f sound carrier for Channel 5. Therefore, if some of the oscillator power is being radiated, it will be picked up by any nearby receiver tuned to Channel 5. If this same oscillator is switched to tune in Channels 7, 8 or 9, its radiation causes interference with Channels 11, 12 or 13, respectively in neighboring receivers tuned to those channels. Notice that the newer 45.75 mc i-f eliminates this trouble, as a check of the right-hand column of the Table will show.

Direct radiation from the local oscillator is eliminated, or cut down below the troublesome point, by careful shielding of this circuit. Radiation can still take place in another way, however, if some of the oscillator energy can work its way back to the receiving antenna. In this case, the receiving antenna becomes a transmitting antenna for the local oscillator. If we didn't use an r-f amplifier stage between the antenna and the mixer input circuit (the receiver would work without one), the local oscillator would couple directly to the antenna, by way of the mixer input, and a great deal of annoying interference would be radiated.

The presence of the r-f amplifier in present-day TV sets cuts down the amount of oscillator energy which can be radiated. This energy has to find its way from the output of the r-f amplifier back to the input. Fortunately, this type of amplifier makes it difficult for a signal to pass in the reverse direction, but some energy can still get back through the plate-grid capacity of the tube or through stray coupling which may appear in the associated circuits. The plate-grid capacity depends upon the tube type and varies even among tubes of the same type. It is higher in triodes than in pentodes. If some of the oscillator signal does succeed in getting back to the input side of the r-f amplifier, it meets further rejection because this circuit is tuned to the frequency of the channel being received while the frequency of the oscillator is 25.75 mc away, in the receivers where this is the i-f. The net result is that the r-f amplifier effectively isolates the oscillator from the antenna.

THE CONVERTER

31-3. Function. – We've already mentioned the main purpose of the converter. It is to change the frequency of the desired r-f signal to a selected lower frequency (the i-f), which is easier to amplify. (Actually, a *band* of frequencies containing the modulation information is converted, but the action is the same.) This involves combining the incoming signal with the local oscillator signal in a nonlinear circuit element, where they beat or heterodyne to produce an output which contains the fundamentals, sum and difference frequencies, plus harmonics of the original frequencies. The output circuit, therefore, must be tuned to select the one desired frequency to send on to the i-f amplifier stages.

The nonlinear element used for conversion is usually a vacuum tube, especially at the frequencies of Channels 2 to 13, because we can obtain a certain amount of gain with a vacuum tube converter. When UHF television channels are assigned, however, it is probable that at least some receivers will use crystal diode converters. The reason for this is that the efficiency and gain of vacuum tubes tend to drop off seriously as the operating frequency increases into the UHF region. Diodes provide no gain (less than unity).

The converter stage looks on the schematic like an amplifier stage, although grid-leak bias is used. However, the input circuit is fed *two* signals and is capable of being switched or otherwise tuned over the frequency range of the receiver; the plate or output circuit is always fixed-tuned to one particular frequency (the i-f).

Nonlinear Operation. – What the schematic doesn't show is the fact that the tube is operated on a nonlinear portion of its characteristic (class AB). For our purpose, we can consider this as meaning the signal is rectified to some extent. In effect, the positive portion of the signal is reproduced with a different amplitude than the negative portion. In this manner we permit distortion to take place and new frequencies to be generated in the tube, as explained in Lesson 19. Actually, the tube functions as a combined detector (signal rectifier) and amplifier and you'll hear it referred to occasionally as the "first detector". Grid current is drawn during part of the cycle, when grid-leak bias is used.

In order to select the desired intermediate frequency from among all those present in the output of the converter tube, we use a fixed-tuned circuit. This offers a high impedance to the desired frequency and permits it to build up an appreciable voltage to pass on to the i-f stages, while offering a low impedance to all the other frequencies.

Converter Tubes. – Like the oscillator, the converter can be operated either single-ended or in push-pull. For convenience and compactness, the converter and oscillator tubes may be combined in a single envelope. All three circuits are used in tuners. For the purpose of comparison, they are shown in Fig. 31-17. At *a* we have the push-pull converter from the KRK-2 front end. At *b* is the single-ended converter from KRK-5, while *c* shows the converter-oscillator from the KRK-8, with both tubes in a single envelope.

Generally, r-f amplifier tubes (voltage amplifiers) which perform well at TV frequencies are satisfactory as converters. Often the same type will be used for both functions in a particular front end – such as the 6J6 in the KRK-2 or the 6AG5 in the KRK-5. There are differences between triodes and pentodes, however, when operated as converters. To clarify these differences we'll have to see what causes tuner noise.

Noise. – We are interested here in *internal noise* generated within the vacuum tubes and the wiring of the tuner itself, not the type which results from ignition systems, diathermy machines, etc., which are outside the receiver. The noise generated in a vacuum tube is called "shot noise" and it is caused by very small variations in the plate current. These irregular variations appear even when the supply voltages are perfectly steady. The

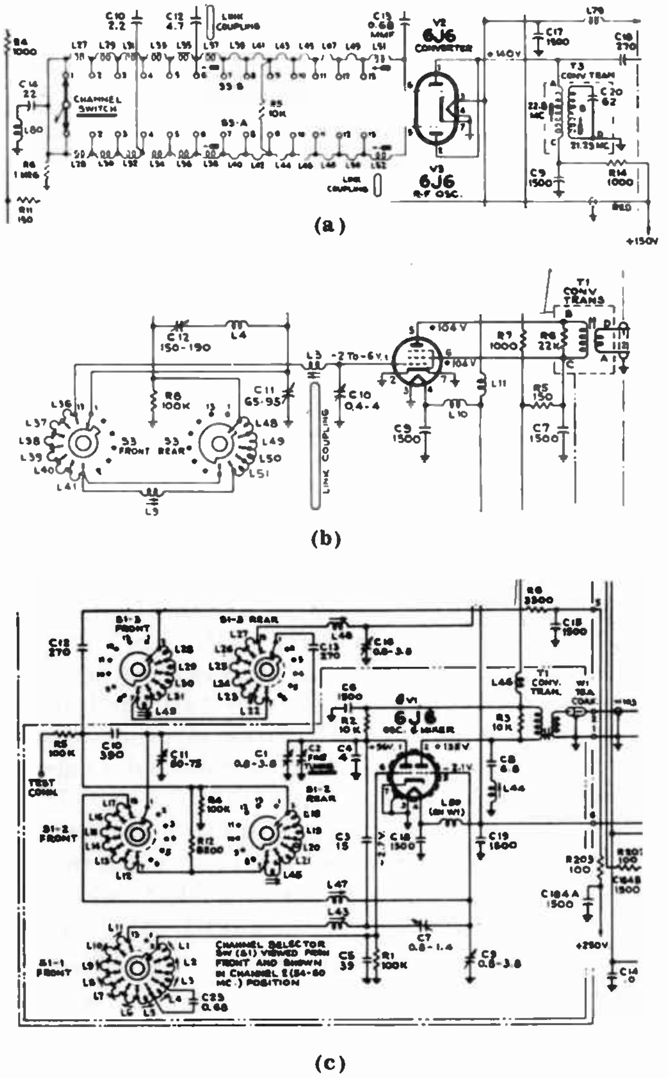

Fig. 31-17

result is a corresponding variation in the voltage across the plate load which is amplified in all the succeeding stages. If this noise fluctuation rides along on the picture signal, it eventually appears as "snow" on the picture tube. Another type of noise is called "thermal noise", which is produced in the wiring and resistors due to the random movement of free electrons. This is less serious than "shot-noise."

Every tube along the line adds some noise to the signal, but once the signal has been amplified above a weak level it can override tube noise. Therefore, the r-f amplifier and converter stages are important in this respect, because here the signal is still pretty weak. If we can keep the noise level lower than the signal level by a reasonable ratio, we'll get a satisfactory picture on the kinescope, since both noise and signal receive the same amplification from there on through the receiver.

The amount of noise generated in a tube depends upon the tube type and the manner in which it is used. Pentodes are noisier than triodes and converters are three or four times more noisy than the same tubes used as amplifiers. Since the converter is at the front end where the received signal is still weak, *most of the snow which appears on the kinescope is generated in the converter.*

With these factors in mind, it is apparent that a triode converter stage results in less noise. It also gives less gain than a pentode, however, and gain is important if we're to get good pictures in a fringe area. The final choice depends largely on the r-f amplifier stage. If there is high gain in the r-f stage, the signal may be boosted well above the noise level and a pentode converter can be used. (The signal-to-noise ratio at the converter output should be at least 10 to 1 for a satisfactory picture.) On the other hand, if the r-f amplifier gives only moderate gain, it is necessary to use a triode converter, to keep the noise well below the signal. Even if a high-gain pentode r-f stage is used, it's often followed by a triode converter to keep noise to a minimum.

Converter Bias. – When a grid leak is used to bias the converter – as in most front ends – it is the injected oscillator signal which provides nearly all the d-c bias voltage. Therefore, *even if there is no signal coming from the antenna, there should still be a d-c bias measurable at the converter grid, if the oscillator is operating correctly.* The amount of oscillator injection is not particularly critical, as long as it is above the minimum to provide a class AB bias.

In some converters the bias is obtained by means of a cathode resistor. The above statements also hold true in this case. Where fixed bias, or bias from the AGC circuit are used, however, the level of oscillator voltage becomes important to efficient operation. For this reason, and because it is difficult to maintain the same oscillator output over the very great frequency range required, these systems of bias are not so popular as cathode and signal bias.

Tuning the Converter. -- In order to help build the signal of the desired channel to as great an amplitude as possible, the input circuit of the converter employs a parallel-resonant tuned circuit like those of the r-f amplifier and oscillator. The amplified signal coming from the r-f stage encounters a high impedance which enables it to develop the largest practicable voltage at the grid of the converter. Signals at other than the selected frequency see only a low impedance and are unable to develop any appreciable voltage.

The converter input circuit in RCA front ends can be physically arranged on a switch wafer (or two, if push-pull) in the same manner as the oscillator tuned circuit, previously described. The same front-panel control switches both simultaneously from channel to channel (and the r-f amplifier, also). In other makes of receivers, the tuning of the converter follows whatever method is used for the r-f stage and oscillator.

Converter Output Circuit and Coupling to I-F Stages. -- The plate of the converter operates into a load which consists of a tuned circuit resonant at the i-f frequency. Thus, the difference frequency produced by the local oscillator beating with the desired signal is permitted to build up the maximum practicable voltage and be sent on to the i-f stages, while other signals are largely rejected. The manner in which this signal is coupled to the first i-f stage is quite important, not only to achieve good transfer of energy, but to prevent still another possibility of oscillator radiation. The fundamental frequency of the local oscillator is also present in the converter output and if this is permitted to couple to the main chassis of the receiver, it is quite likely to cause serious radiation. This is true because the oscillator current would be almost certain to find some piece of metal which would be the proper length to act as an antenna. Therefore, it is desirable to reduce stray coupling between the converter and the main chassis to an absolute minimum. This can be done if capacitive coupling is used, and this type of coupling is fairly common. Link (inductive) coupling is very successful here, because as we have mentioned, it reduces stray capacitive coupling to practically nothing. In addition, a link is mechanically convenient, because it can have almost any physical length within reason. Therefore, work on the r-f unit is facilitated when a link is used, since the unit can be removed from the main chassis and reconnected by a link of whatever length is necessary.

THE R-F AMPLIFIER

31-4. Functions. -- The r-f amplifier stage has two major jobs to perform, and several others which are connected with these. Basically, the principal functions of this stage are:

1. Preselection of the desired channel.
2. Amplification of the selected signal.

The job of preselection involves more than simply tuning a resonant circuit frequency of the desired channel. We mentioned in paragraph 31-1 that certain types of undesirable r-f signals are unaffected by the selective action of the i-f stages and can get through to cause interference on the kinescope. The two principal types of interfering r-f signals are *images* and *direct i-f interference,* which are defined and discussed below. Right now, we're interested in the fact that part of the preselection task is to eliminate these signals before they get to the converter. So, we not only have to preselect the desired signal, but *reject the troublesome ones.* In addition, the selective r-f circuits and the primarily one-way action of the amplifier tube help to prevent oscillator energy from getting to the antenna, where it would radiate interference to other sets.

The amplification function also involves other factors. The r-f amplifier is the first tube encountered by the weak incoming signal; therefore the amount of noise present in this tube determines the signal-to-noise ratio. Also, we'll see that this noise level has a direct relation to the useful gain of the whole receiver. In other words, it determines whether or not we'll get a satisfactory picture from a weak signal. The problem of getting enough gain in the r-f amplifier stage itself (not just the tube) is complicated by the fact that as the bandwidth increases the stage gain decreases -- and we're trying to amplify a band of frequencies 6 mc wide.

Let's bear in mind that *a superheterodyne receiver will work without an r-f amplifier stage.* Broadcast receivers often do without it and even some early TV sets were made in which the antenna signal was led directly into the converter input. When we try to do without the r-f stage, however, the picture quality immediately goes bad, because of the relatively high noise level in the converter and because there's nothing to stop strong interfering signals from forcing their way into the converter. Also, the oscillator signal can get to the antenna easily and radiate interference to neighboring receivers.

One more thing to remember -- although we'll refer to the r-f amplifier in this general discussion as a single-tube stage, there is no reason why it has to be. We can operate single-ended or use two tubes (often in a single envelope) in push-pull. We can also use two stages, for greater amplification, or we can operate two triodes with low noise level in such a manner as to provide as much or more gain than a pentode. Two important circuits of this type are the "cascode" and the "totem" amplifiers. These r-f amplifier circuits are described later in the lesson.

Wavetraps and Filters. -- Before we get into the subject of preselection and the rejection of interfering signals, we must consider the manner in which *L* and *C* combinations can be used as *filters* or *traps* to block certain frequencies while permitting others to pass. The theory behind filtering action has been thoroughly covered in Lessons 17 and 18. There we learned that the reactance (opposition to current flow) of a coil increases as the frequency increases while the reactance of a capacitor decreases with increasing frequency. We also learned that the impedance of a series-resonant circuit is minimum at resonance while that offered by a parallel-resonant circuit is maximum to the resonant frequency.

Quite often, in r-f tuners, you'll find a parallel-resonant circuit in series with the r-f signal path, or a series-resonant circuit across it, as shown in Fig. 31-18. These are known as "wavetraps" or just "traps". We have seen that a parallel-resonant circuit offers maximum impedance at its resonant frequency. It follows that the parallel-resonant trap in series with the line (Fig. 31-18*a*) must cause large or complete attenuation of signals at its resonant frequency, but have little or no effect on signals at frequencies somewhat removed from resonance. The parallel-resonant trap is always in series with the line. The series-resonant trap shown at *b* offers *minimum* impedance to signals at the resonant frequency. Therefore, since it is always connected in shunt, it looks to the signal like a short circuit path and prevents all or most of the signal from proceeding. Both types of traps are usually tunable over a band of frequencies, *but they do not attenuate the entire band* -- only the resonant frequency and those near it on both sides. The traps, then, are useful to tune out a single interfering signal, such as that from a nearby FM station.

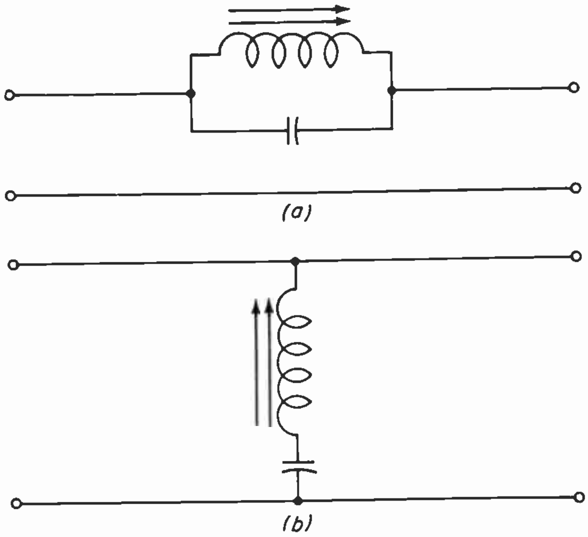

Fig. 31-18

Let's consider the four basic types of filters in terms of the jobs they perform. Here is the list:

1. ***Low-pass*** filter -- permits all frequencies below a desired *cut-off frequency* to pass without interference, but attenuates all frequencies above cut-off.
2. ***High-pass*** filter -- passes all frequencies above cut-off, but attenuates those below.
3. ***Band-pass*** filter -- has two cut-off frequencies and passes the band of frequencies between them, while attenuating all others above and below.
4. ***Band-elimination*** filter -- also has two cut-off points, but eliminates the band of frequencies between them and permits all frequencies above and below the band to pass.

There are many possible LC combinations which will perform each of these four filter functions, but each can be broken down into its basic form. For instance, when you see one or more coils (usually two) in series with the signal path and a capacitor shunted across it, you can be fairly certain that this is a low-pass filter. On a schematic it looks like this:

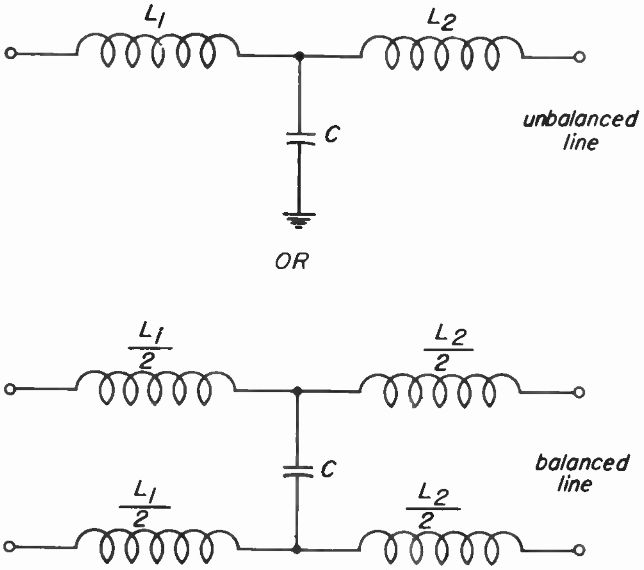

Fig. 31-19

Without going into the theory too far, it's apparent at a glance that the reactance of coils L_1 and L_2 is much greater to signals at high frequencies than it is to signals at lower frequencies, hence there is more and more attenuation as the frequency increases. At the same time, capacitor C offers a high reactance to low frequency signals, but this reactance decreases with increasing frequency. To a signal at some higher frequency, C looks practically like a short circuit.

Depending upon the values chosen for L and C, there will be some *cut-off frequency* above which all signals will be attenuated by the coils and partly or wholly shorted out by the capacitor. All frequencies below cut-off, however, will pass freely. Therefore, the combination is called a low-pass filter.

The high-pass filter is exactly the opposite arrangement. It looks like this:

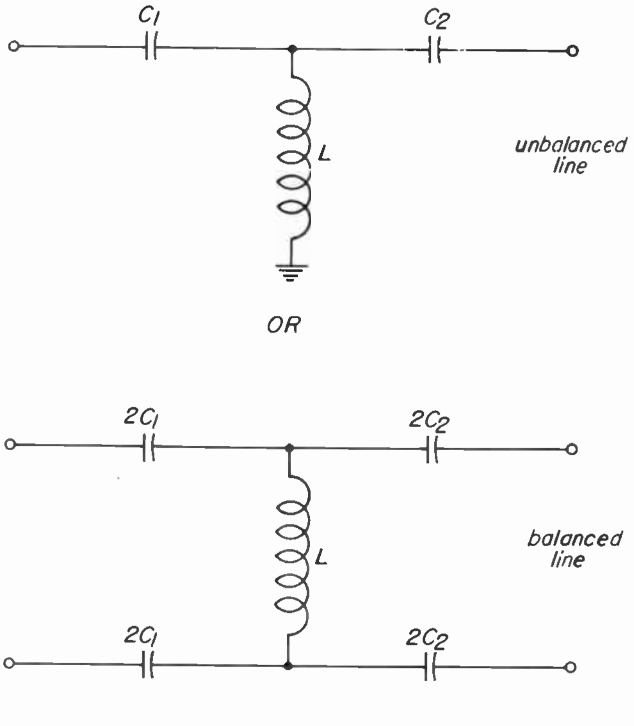

Fig. 31-20

As we would expect, the action is similar to that of the low-pass filter, but in reverse. Here, the reactance of the shunt coil becomes smaller as the frequency *decreases*, until it begins to look like a short circuit path to lower-frequency signals. The capacitors offer higher reactance in the series path as the frequency goes lower. For signals below the cut-off frequency there is high attenuation and a low-reactance shunt path. Frequencies above cut-off see a high inductive reactance across the line, which keeps them from shorting out, and practically no opposition from the capacitors, so they travel along the line where we want them to go.

This high-pass type of filter is very useful in TV front ends because it helps us to reject possible interference from all the stations below the television frequencies. Fig. 31-21 shows a sample attenuation curve for a high-pass filter of this type. Fc is the cut-off frequency, the lowest (in this case) frequency which is passed without attenuation. Below cut-off you'll notice that the attenuation does not increase very rapidly. *This sharpness of cut-off* is very important in rejecting signals which are very close to the television frequencies. The simple filter we show in Fig. 31-20 does not have a sharp cut-off, but by using more complex designs, often with two or more sections, and high-Q components, the cut-off curve can be made very steep. This is true of all four basic types of filters.

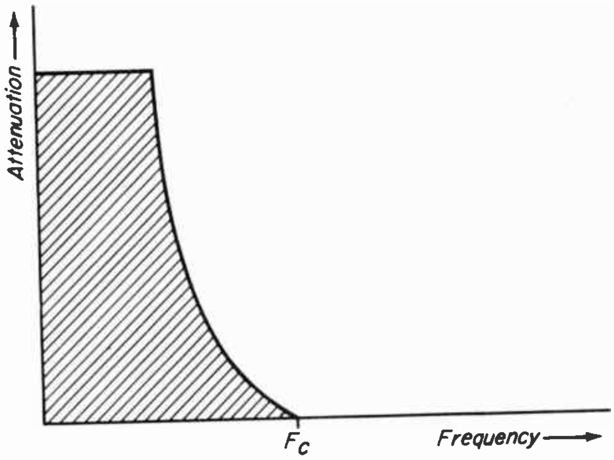

Fig. 31-21

The band-pass filter is one which looks quite familiar.

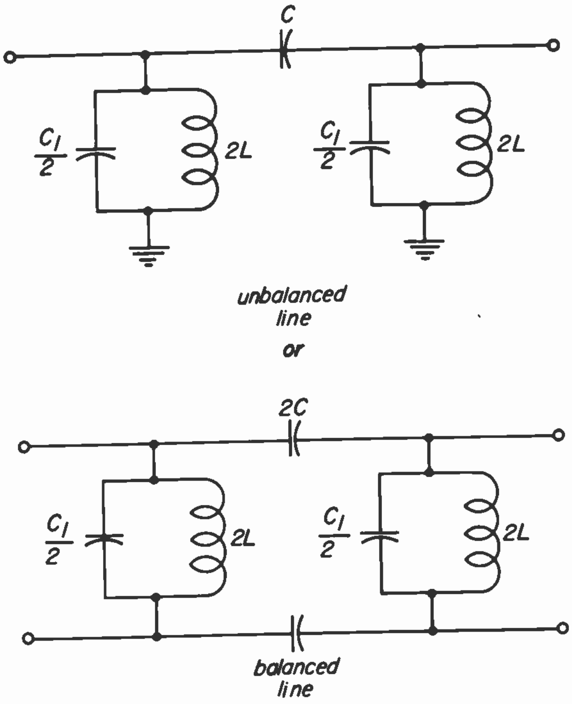

Fig. 31-22

This looks like the coupling circuit between amplifier stages and it works in exactly the same way. The resistive impedance of each parallel-resonant circuit is maximum at the resonant frequency, permitting a signal at that frequency to build up a maximum voltage across it. To frequencies on each side of resonance, however, the circuits offer a low impedance and what amounts to a shorting path. If these frequencies are very far removed from resonance, they cannot develop enough of a voltage across the impedance to get out of the filter. The band that is passed consists of only those frequencies fairly close to resonance on both sides, depending on the Q and the values of L and C.

The band-elimination filter is the remaining type, and it is shown in Fig. 31-23.

Here we have a parallel-resonant circuit in series with the line and a series-resonant circuit in shunt. When signals coming along the line encounter the parallel resonant trap circuit, it offers a high impedance to any frequencies at or near its resonance point, but lets other frequencies pass easily. If the trapped signal is quite strong, some of its energy may get by the parallel resonant trap, only to encounter the series resonant trap which has the same resonant frequency.

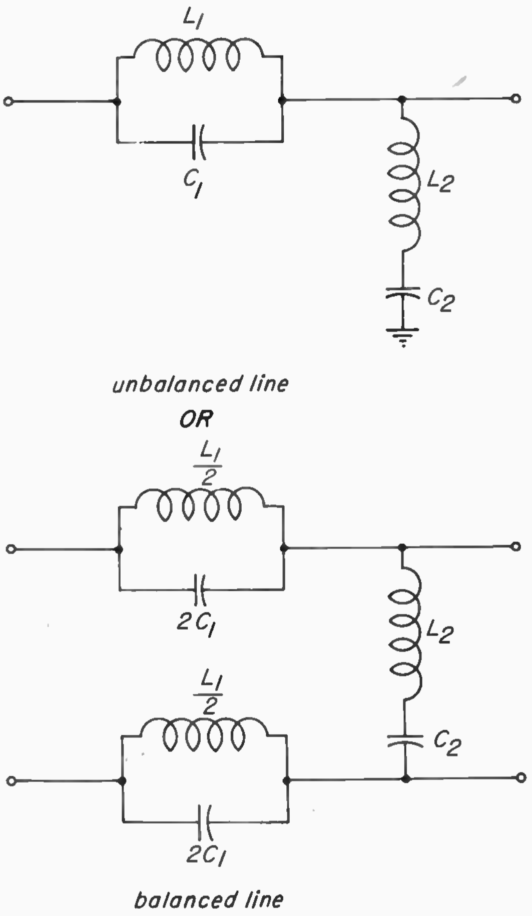

Fig. 31-23

We know that a series-resonant circuit offers a very low impedance to the resonant frequency, so the signal which has already been attenuated is now shunted to ground by the series resonant trap. Therefore, the band of frequencies around the resonant point of the traps is eliminated. As usual, the bandwidth is determined by the values of the coils and capacitors, and to a certain extent by their Q.

Rejection of Images and Direct I-F Interference. -- An *image* is an r-f signal that beats with the output of the local oscillator and produces a difference frequency which is within the range accepted by the i-f amplifier stages. The interference commonly encountered from FM stations gets into the receiver as an image. *Direct i-f interference* is caused by r-f signals whose fundamental frequencies are within the i-f range. These signals pass through the converter as fundamentals and are accepted by the i-f stages.

The manner in which an image is formed and passed through the receiver is illustrated in Fig. 31-24. We're assuming a picture i-f of 25.75 mc. The channel-selector switch is set at Channel 2, causing the local oscillator to operate at 81 mc. Suppose now that a 104 mc signal from an FM station is also present at the converter input. This frequency beats with the frequency of the oscillator and produces at the converter output a difference frequency of 23 mc (104 *minus* 81). This 23 mc signal is well within the pass band of the picture i-f stages and is readily accepted. Since it is not part of the Channel 2 modulation information, how-

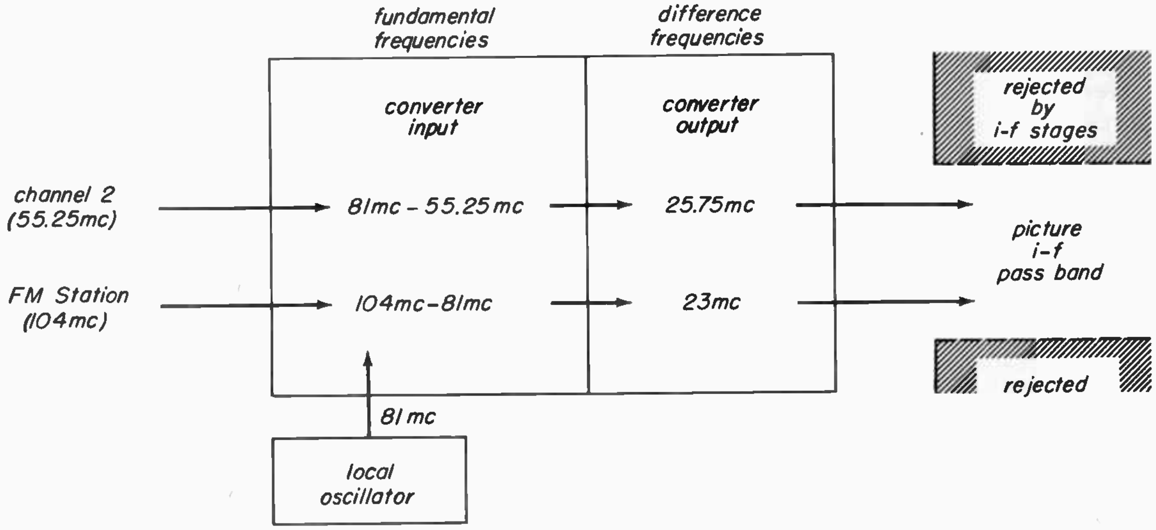

Fig. 31-24

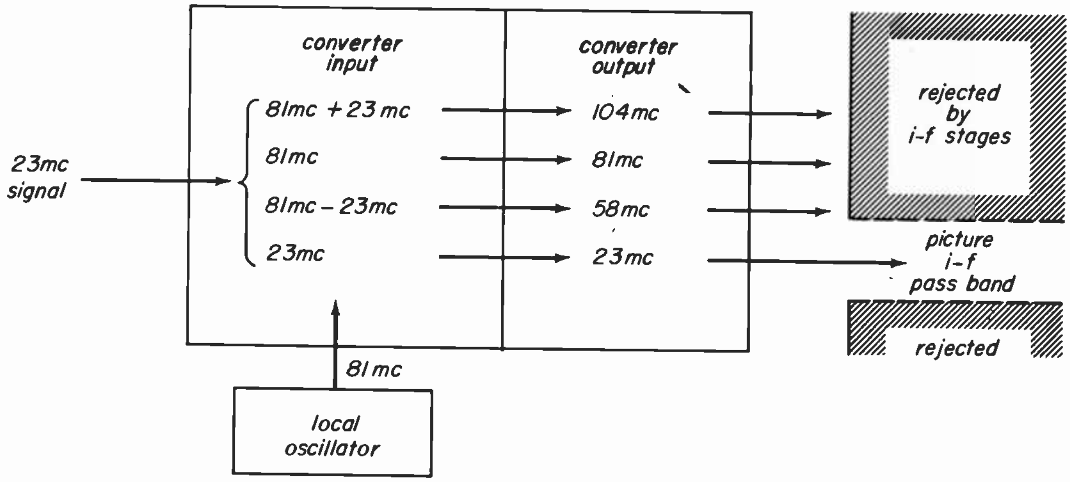

Fig. 31-25

ever, it shows up on the kinescope as interference. In receivers not using the intercarrier system, it may also show up in the sound. The frequency of the station causing image interference is always as far above the local oscillator frequency as the desired channel is below it. In other words, the image frequency is twice the intermediate frequency added to the the desired frequency. This example is for an oscillator frequency above the frequencies of the incoming r-f signal, which is the way the local oscillator usually operates. In some receivers, however, it operates below on the high band.

Direct i-f interference is the second principal type which may be caused by an unwanted r-f signal. Fig. 31-25 shows how this occurs. A strong 23-mc r-f signal from a shortwave station appears at the converter input. *Regardless of the local oscillator frequency*, the fundamental of the 23 mc signal (as well as the sum and difference frequencies) appears at the output of the converter. Since the fundamental frequency lies within the i-f range, it will be passed on through the receiver and show up as interference in the picture.

For trouble-free reception, it's logical that both these types of interference must be eliminated, or at least cut to a minimum, *before* the undesirable signals reach the input to the converter. The tuned circuits of the r-f amplifier, between the antenna and the converter, give us fairly good preselection. By arranging the circuits in such manner that when the channel-selector switch is set to receive a particular channel the resonant circuits are also tuned to accept only the frequencies in that channel, we help to reject others.

Strong signals, however, can still force their way through the r-f amplifier, particularly if they are not too far removed from the resonant frequency. (The newer 45.75 mc intermediate frequency helps in this respect, by making image signals 80 to 90 mc away from the resonant frequency of the r-f circuits.) The tuned circuits of the r-f amplifier cannot be made to have zero response to all frequencies outside the pass band; therefore a very strong signal from a nearby FM station, for instance, may be able to develop a small voltage across the resonant circuit. This voltage will be amplified by the r-f stage and transferred to the converter input, which is exactly where we don't want it.

So, to prevent these strong signals from sneaking through the r-f stage, we can use some of the filters just discussed. We can place them either at the input or output of the stage, whichever is more convenient. In general, it's easier to reject a weak signal, before we amplify it, hence the filters are likely to appear ahead of the tube in a good many circuits.

Layout of the R-F Stage. -- Now that we've covered the important fundamentals, let's take a look at a fairly typical r-f

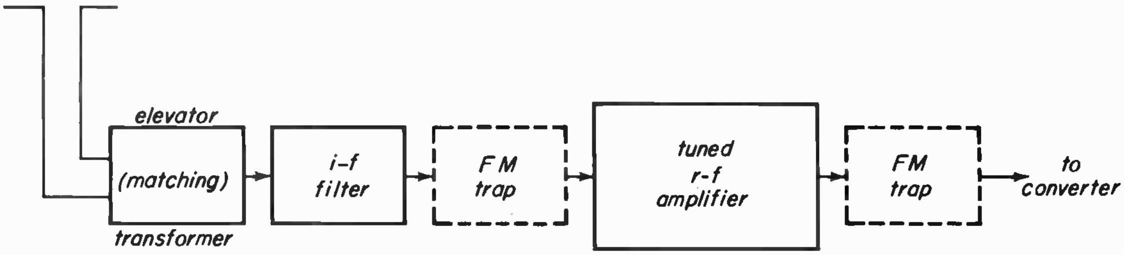

Fig. 31-26

stage and see how it breaks down in terms of preselection. Fig. 31-26 shows in block form two possible arrangements of the stage. Notice that the FM trap may be located either ahead of or after the tube. This is also true of the i-f filter, but the elevator transformer must always be located as shown. This is an impedance-matching device, which provides a good match between the transmission line from the antenna and the input circuit of the receiver. A good impedance match here helps the desired signal to develop the largest practicable voltage without serious losses due to reflections or other undesirable effects. The stronger the signal of the desired channel when it reaches the grid of the r-f amplifier, the better the signal-to-noise ratio, so we do everything possible to aid it.

Fig. 31-27 shows a schematic of the same r-f stage, divided into the four basic sections: matching, i-f filter, FM trap and the input of the tuned amplifier itself. Nearly any TV receiver r-f stage can be sectioned off in this manner, since the same general functions must be performed, so if you run into an unfamiliar schematic look for a matching device, filters and the input tuned circuit.

Elevator Transformer. -- Section 1 on the drawing is the matching device. This consists of four windings on separate coil forms, each of which is the equivalent of a coiled 150-ohm transmission line. The coiled shape gives the transmission lines a high end-to-end impedance, which makes it possible to have one end grounded while the other is "hot". The series connection shown on the main schematic matches the input from a 300-ohm balanced line into the receiver, while the series-parallel connec-

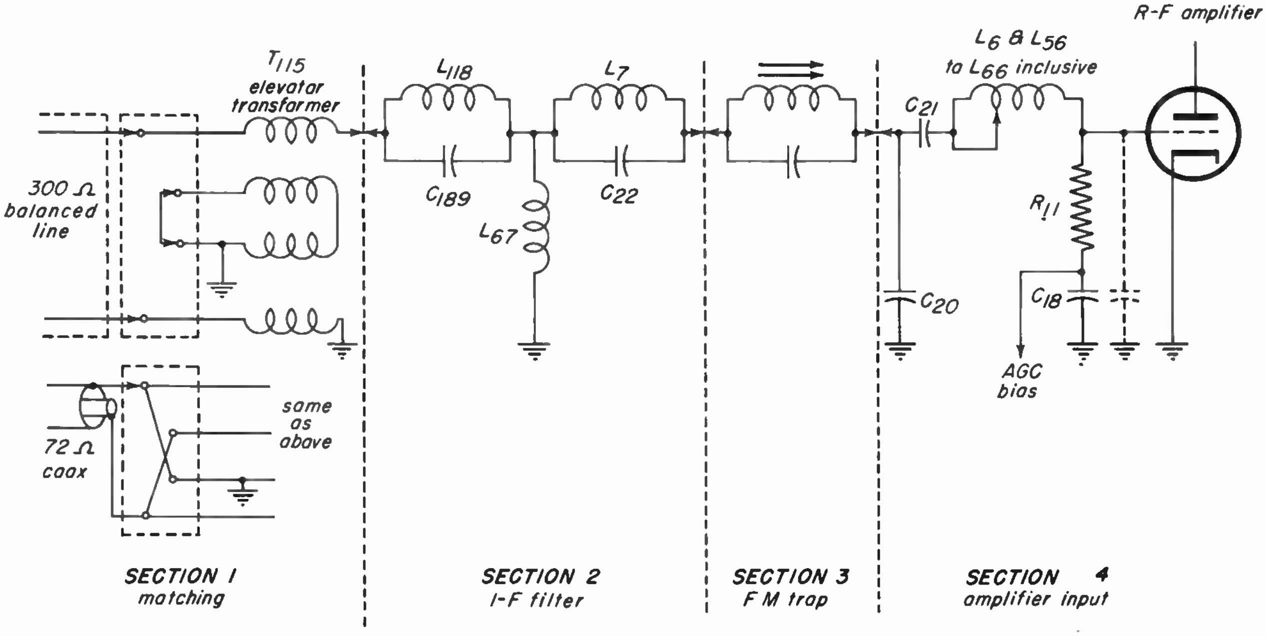

Fig. 31-27

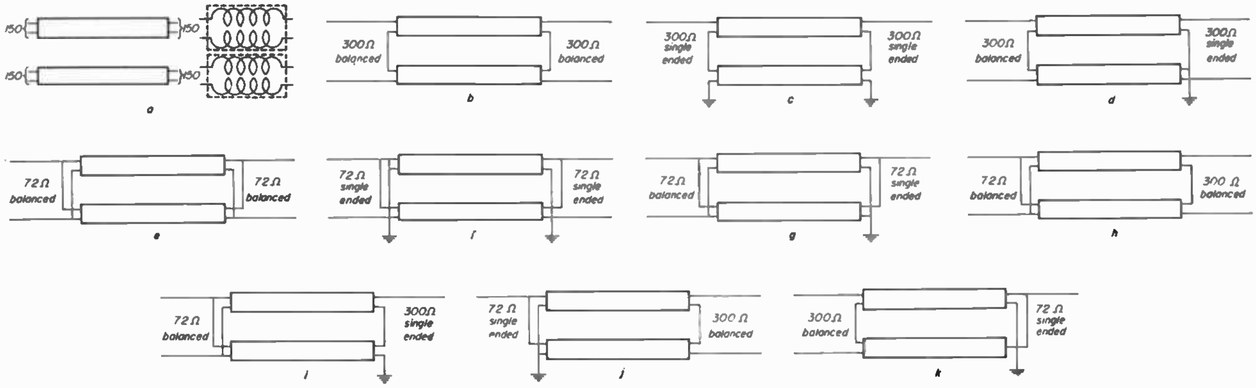

Fig. 31-28

tion shown below it matches an unbalanced 72-ohm coax to the 300-ohm receiver input. The transformer provides approximately the same effective match over the entire TV band, which is important to insure equally good reception on all channels.

The matching or "elevator" transformer is a very versatile device for use in any case of matching 300-ohm or 72-ohm impedances, or any combination of the two, not only at the receiver input, but in other applications. It is a balance converter as well as a matching device.

Fig. 31-28 is included to show you some of the useful ways in which this transformer can be employed. The drawing at *A* shows the manner in which the four windings are related and can be regarded as two sections of transmission line. If it is desired to match a 300-ohm source to a 300-ohm load, the job can be done by using the connections shown in *B*, *C* and *D*, choosing the connection which is appropriate. Any example shown in this figure can be reversed, as far as balance is concerned. For instance, the connections at *D* can be reversed to connect a single-ended source to a balanced load. Drawings *E*, *F* and *G* show the connections for matching source and load of 72 ohms each, while *H*, *I*, *J* and *K* illustrate the case where 72 ohms must be matched to 300 ohms, whether the line balance is to be changed or not.

I-F Filter. -- Section 2 (on Fig. 31-27) is a high-pass filter which matches the 300 ohms from the elevator transformer. This is a little more complicated than the high-pass filter we discussed previously, but you'll notice it has the same general make-up. This filter section has a cut-off frequency just below the lowest TV channel (below 54 mc) and it is so designed that the *maximum* attenuation is offered to interfering signals in the i-f range (21 to 26 mc). It provides good attenuation for any signals below Channel 2, however. In some receivers, you'll also find a low-pass filter which rejects signals above the frequency of Channel 13.

FM Trap. -- Section 3 is an FM trap. In this case it is a simple resonant circuit, acting as a shunt trap in series with the line. It can be tuned over the 88 to 108 mc FM range by adjusting a threaded core of brass or powdered iron to vary the inductance. It will attenuate signals at the frequency it is tuned to and for a short range on both sides while permitting frequencies above and below the FM band to pass without interference.

Amplifier Stage. -- Section 4 has two jobs to perform. It provides selectivity and helps step up the signal voltage to the grid of the r-f amplifier. Tuning is handled in the same manner as the tuning of the oscillator and converter. In many sets, the tapped inductance is mounted on a switch wafer and ganged with the wafers for the other stages of the tuner. Resistor R11 is used to provide a bandwidth of 10 to 15 megacycles on each channel. This is more than is needed for the 6 mc channels, but it helps to make a more nearly resistive load to match the 300-ohm input from the filters. The signal voltage is applied to the tank circuit across C20 and a voltage gain to the grid of about 1.8 is obtained. C21 and C18 are d-c blocking capacitors to keep the bias voltage away from ground and from the antenna circuit.

The output circuit into which the r-f tube operates is usually conventional. It is tuned to the frequency of the desired channel, by means of inductances mounted on a switch wafer, as explained previously.

Coupling to the Converter. -- As in the oscillator, we can couple the output signal from the r-f amplifier to the converter by inductive or capacitive means, or a combination of the two. Inductive coupling by means of a link is fairly common, as is the use of a capacitor. Whatever means is employed, the degree of coupling is fairly critical. It is especially desirable to keep the coupling very low at the local oscillator frequencies and the image frequencies, to prevent oscillator radiation and image interference. In order to accomplish this, it is necessary to eliminate every possible form of stray coupling between the r-f output circuit and the input to the converter. Often a grounded shield is placed between the components of the two circuits to help reduce undesired coupling to a minimum.

The R-F Amplifier Tube. -- We have two major considerations in choosing the r-f amplifier tube. First, we want to obtain a fair amount of gain, to boost the weak signal voltage, and second, we must keep the noise level low, to prevent excessive snow from spoiling the quality of the picture. These objectives are contradictory, because triodes have a low internal noise but only moderate gain, while higher-gain pentodes are noisier.

We have said that a tube operated as an amplifier generates less internal "shot" noise than the same tube operated as a converter. A fixed amount of snow is generated in the converter, and added to the signal as it passes through this stage. However, with enough gain in the r-f amplifier to boost the signal to a fairly high level, the converter noise becomes insignificant, resulting in a favorable signal-to-snow ratio. Since both the signal and the snow are equally amplified by the receiver, any ratio of signal-to-snow set in the tuner will appear in the picture. And since any snow in the r-f amplifier is added to the fixed amount of snow always generated in the converter, snow must be kept at a minimum in the r-f amplifier. The amount of noise generated in the r-f amplifier determines the useful gain of the receiver.

Feedback in Triode R-F Amplifiers. -- When a triode amplifier is used at radio frequencies, feedback occurs, exactly as in an oscillator, and the amplifier begins to oscillate. This, of course, destroys its usefulness as an amplifier. The fundamental amplifier circuit shown at *a* of Fig. 31-29 is the same as a tuned-grid tuned-plate oscillator. A portion of the output voltage is fed back through the plate-grid capacitance of the tube to the grid circuit, where it adds to the signal voltage and causes oscillation. If a triode with its relatively large plate-grid capacitance, is used as an r-f amplifier, some form of *neutralization* must be employed to cancel the feedback through the tube. (This trouble does not arise with pentodes, because the screen grid reduces the plate-control-grid capacitance.

Neutralization is accomplished by inductive or capacitive feedback of another

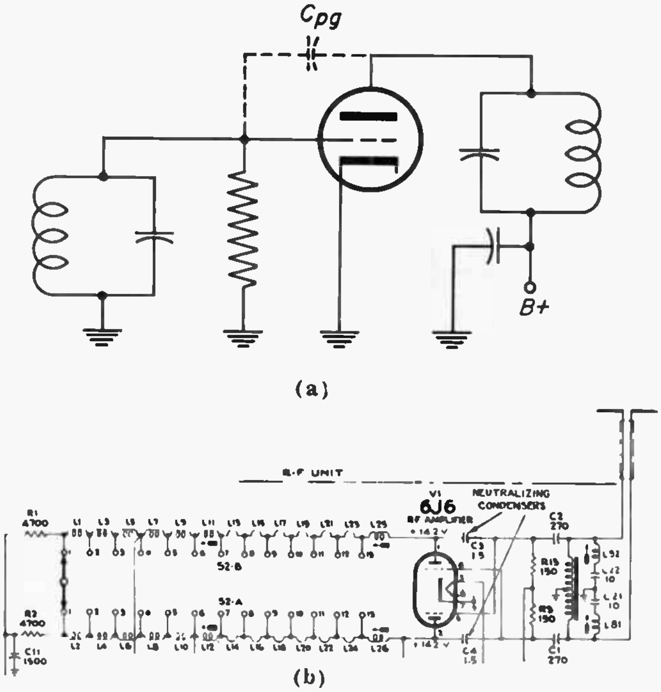

(a)

(b)

Fig. 31-29

voltage, exactly equal and opposite in phase to the undesired feedback voltage. These two voltages meet and cancel out at the grid.

A simple neutralizing method for a push-pull circuit is shown at *b* of Fig. 31-29. The crossed neutralizing capacitors are approximately equal to the tube feedback capacitances. Each one transfers a voltage equal to the feedback, but 180° out of phase with it, through the tube.

Grounded-grid Amplifiers. -- The chief disadvantage of a neutralized triode as an r-f amplifier is the difficulty of getting good neutralization over a wide range of frequencies without having to change the adjustment of the feedback capacitor. This type of circuit has been successfully used, however; an example is the RCA KRK-2 front end.

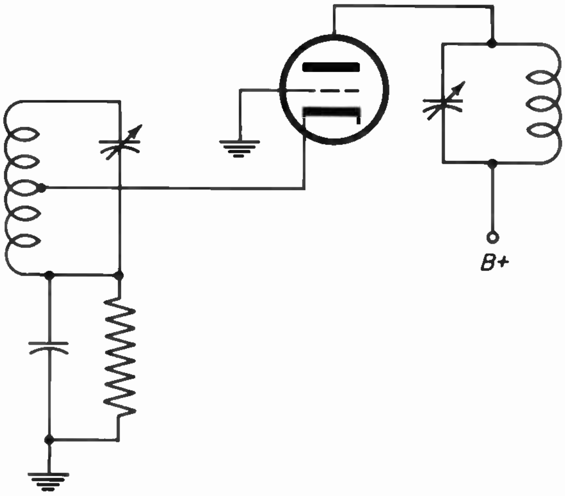

Fig. 31-30

Instead of neutralization, the grounded-grid method of operation may be used. In this method, the tube capacitance (feedback path) between output and input circuits is reduced by applying the input signal to the cathode and grounding the grid to act as a shield between cathode and plate. The basic circuit is shown in Fig. 31-30. It is easy to adjust, stable, and has good broadband response. The gain is lower than that of a neutralized triode, however, and it is usually necessary to use two or more stages to deliver a sufficiently strong signal to the converter. Certain triode tubes, such as the 6J4, are designed especially for grounded-grid operation. As u-h-f TV comes into use, "lighthouse" and "pencil" tubes probably will be used as grounded-grid r-f amplfiers. A grounded cathode r-f stage followed by a grounded grid amplifier is called a *cascode* or *totem* circuit.

The "Totem" Circuit. – This circuit gets its name from the fact that the r-f amplifier uses two stages in series, as shown in Fig. 31-31 *b*. Figure 31-31 *a* is a simplified schematic of the complete circuit. V1 is connected as in an ordinary circuit, except that it receives plate voltage from the series connection with V2. The incoming signal develops a voltage

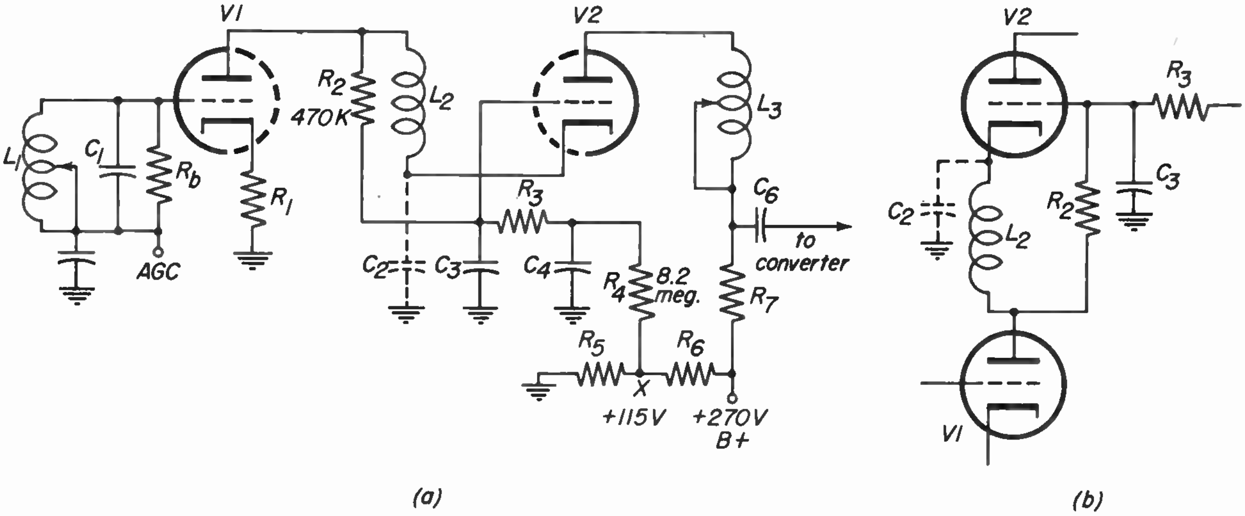

(a) (b)

Fig. 31-31

across L_1, which is applied between grid and cathode of V1 in the usual manner. R_b merely broadens the response of the tuned circuit, since the bias comes from the AGC circuit. The principal function of V1 is to provide a good signal-to-noise ratio; the gain is very low.

V2 is the grounded-grid amplifier, which provides most of the gain of the r-f stage. The small capacity of C_3 effectively grounds the grid for r-f, while R_2 provides the bias. The signal is coupled between the tubes by C_2, which is the combined cathode-grid and cathode-heater capacitance of V2, and coil L_2. This coil and capacitance form a series-resonant circuit which offers a very low impedance to the resonant frequency and results in a low impedance at the plate of V1. At this point, the r-f current is high and the r-f voltage low. The cathode of V2 is connected to the high-voltage point, however, since the impedance across the capacitor is very high, which means that the r-f current is low and the r-f voltage high. This results in good voltage gain in the signal fed to V2. The coil and capacitance cover the complete TV band, and no tuning is necessary.

Since the tubes are in series and act as resistance to the plate supply voltage, a voltage-divider effect results and the plate voltages under normal operating conditions are equal at approximately 130 volts. V1 is biased by the AGC, however, and when signal conditions vary, the bias varies the tube resistance. This means that the supply voltage no longer divides equally between the tubes. Under some conditions, most of the supply voltage would appear at the plate of V1, causing a serious increase in the internal tube noises. Thus, some means must be provided to make the resistance of V2 "follow" that of VI, so that the voltages will remain equal. This is accomplished by resistors R_2, R_4, R_5, and R_6. (R_3 is an isolation resistor, and has little effect on bias.) The bleeder formed by R_5 and R_6 gives a constant reference of 115 volts at the midpoint, X. When no signal is applied to the grid of V1, the plate voltage on both tubes is 130 volts. The plate of V1 is connected to the reference point on the bleeder through R_2 and R_4. The ratio between these resistors is about 18 to 1, so slightly less than one volt appears across R_2 to bias the grid of V2.

If a strong signal is being received, the AGC bias increases and the plate voltage of V1 rises. Suppose, for example, it is increased to 140 volts. The difference in potential between the plate of V1 and the bleeder reference point is now 25 volts, which places approximately 1.4 volts across R_2 to bias the grid of V2. This increased bias causes the plate voltage of V2 to rise, also, and the plate voltages remain equal regardless of changes in the input signal.

PUSH-PULL TUNER

31-5. Now that we have discussed the functions of the front end in some detail, we are ready to look at specific r-f units, beginning with the model KRK-2 which is a typical tuner with a push-pull circuit. Like most tuners, the KRK-2 is built on its own subchassis, which can be easily removed from the main chassis for repairs. Fig. 31-32 shows the unit set up in a jig.

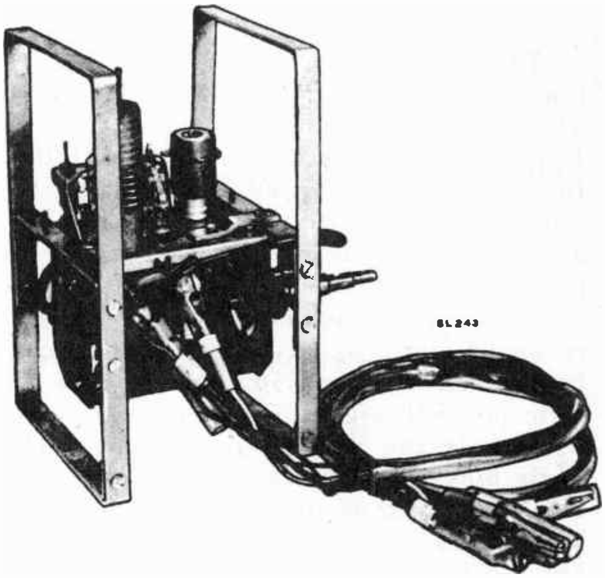

Fig. 31-32

Figure 31-33 is the complete schematic of the KRK-2 r-f unit. The three stages use 6J6 tubes for push-pull operation, with the exception of the converter, whose grids are push-pull but whose plates are connected in parallel. The three main resonant circuits are tuned by switching inductance in or out of the circuit, as previously described. These inductors are mounted on six switch wafers. The necessary capacitance is provided by the distributed capacitance of the coils and the tube capacities.

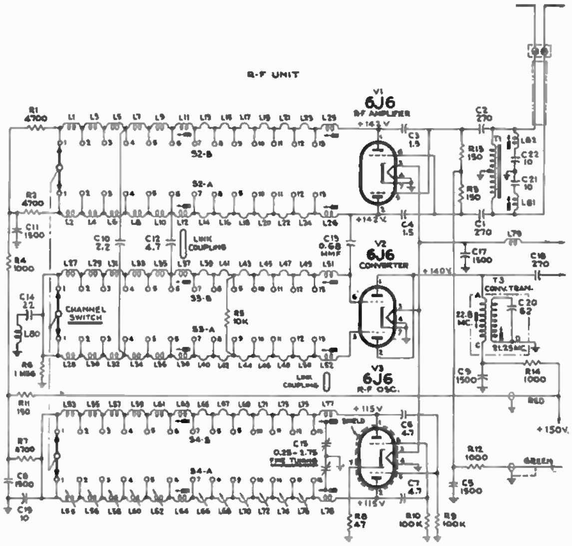

Fig. 31-33

The R-F Amplifier. -- Signals enter the tuner by the balanced transmission line, which is terminated by resistors R_3 and R_{13}, providing 300 ohms in shunt with the line. The center-tapped coil T_1, in conjunction with the distributed capacitance across the line, acts as a short circuit to frequencies below the TV channels, without destroying the match. The series-resonant trap, L_{81}-C_{21} and L_{82}-C_{22}, can be tuned from 92 to 136 mc to trap an interfering FM signal. Capacitors C_1 and C_2 couple the signals to the 6J6 grids while blocking the bias voltage developed across R_{12} from the antenna circuits. They also prevent the bias from being shorted to ground through the center tap of T_1.

The necessary d-c path from grid back to cathode (always required in amplifiers) goes through R_3, R_{13}, R_{12}, and the power supply, which is not shown. Capacitors C_3 and C_4, 1.5-MMF each, are connected from each plate to the opposite grid to neutralize the feedback that might otherwise cause the stage to begin oscillating. The 1.5-MMF value is about equal to the plate-grid capacitance of each half of the 6J6.

The tube, operating into the load provided by the tuned resonant circuit, amplifies the signal. The load circuit has a bandwidth of about 15 mc, centered on the channel being received. Plate voltage is supplied through R_4, R_1 and R_2 which, with bypass capacitor C_{11}, form a decoupling network to keep r-f out of the power supply, and prevent undesired signal frequency feedback from a later stage.

The Converter. -- The output from the r-f amplifier is coupled to the converter input through the link and through capacitors C_{10}, C_{12} and C_{13}. There is also some coupling due to the fact that the circuits are near each other on the subchassis. As a result, coupling is quite uniform over the entire TV range of frequencies. The push-pull tuned grid circuit operates in much the same manner as the r-f plate circuit, and R_5 broadens the response to obtain the necessary bandwidth. The series-resonant trap, L_{80} and C_{14}, forms a bypass to ground for any i-f interference signal. The necessary bias voltage is developed across R_6, the grid-leak resistor, by rectification of the oscillator signal.

The converter output uses the parallel-connected plates to feed the primary of T_3, the converter transformer. C_{18} provides coupling to the grid of the first picture i-f amplifier. The primary of T_3 is resonant at 22.8 mc, and offers a high impedance to signals at this frequency, which aids in selecting the desired i-f from among the various fundamental and difference frequencies appearing at the converter output. Above 22.8 mc, the impedance of the T_3 primary drops off, but not rapidly, because R_{14} is in parallel with it through C_{18}. This arrangement provides the necessary bandwidth. The T_3 secondary winding is resonated with C_{20} to the sound i-f frequency, 21.25 mc, and the sound signal is taken off by a tap at the desired impedance point and fed directly to the grid of the first sound i-f tube. Since the Q of this secondary circuit is quite high, the impedance of the primary at 21.25 mc is fairly low and very little voltage at the sound intermediate frequency can be developed across R_{14}. This helps to keep the sound signal out of the picture i-f stages, where it would cause interference.

The picture i-f signal is kept out of the sound stages by the sharpness of response (due to high Q) of the T_3 secondary circuit, which has a bandwidth of only about 200 kc. Therefore it responds very poorly to signals at the picture i-f frequencies. Also, of course, the sound channel is designed to handle a frequency-modulated signal, and the amplitude-modulated picture signal meets additional rejection because of this fact.

The Oscillator Stage. -- The oscillator of the KRK-2 tuner is a push-pull circuit employing both halves of a 6J6 and a tuned plate load circuit mounted on two switch wafers in the same manner as that of the r-f amplifier. The small inductor sections mounted on the most accessible wafer can be adjusted by threaded brass slugs. This facilitates tuning the oscillator to the exact frequency required for each channel. The capacitance necessary to resonate the tank circuit is provided by the distributed capacitance of the inductors plus C_{15}, the fine-tuning control. The value of this capacitor (which is connected across the slugs only) is just enough to give a range of tuning which permits correcting for a minor drift in frequency. This range is about 1,600 kc at Channel 2 and about 3.8 mc at Channel 13.

Signal bias for the oscillator is provided by R_9 and R_{10}, in conjunction with R_8, which helps to keep the output fairly uniform at all frequencies. When switched to a channel where the oscillator develops a higher output, the additional plate and grid current through R_8 increases. Since the voltage drop across this resistor is part of the total bias, the increase acts to hold the oscillator output at approximately the same level.

Capacitors C_6 and C_7, connected between each plate and the opposite grid, provide a path for the feedback voltage, which is required to keep the circuit in oscillation. These capacitors are connected exactly as the neutralizing capacitors in the r-f amplifier, but their value is *larger*, in order to feed back *more* than enough voltage to neutralize the circuit. This greater in-phase feedback causes the circuit to oscillate. The plate voltage is supplied through R_7, which drops it to the necessary 110 volts, and also functions as an isolation resistor. C_{19} bypasses r-f around R_7 (this capacitor is omitted in some tuners) and C_8 bypasses r-f from the junction of R_7, R_4 and R_{11}, to aid in preventing high-frequency feedback into the power supply.

The oscillator output is coupled to the converter through the link and also directly, since the circuits are close together. This helps to keep the oscillator injection about the same on all channels.

PUSH-PULL AND SINGLE-ENDED TUNER

31-6. Fig. 31-34 shows a typical tuner with a push-pull oscillator circuit but single-ended tuning circuit for the r-f amplifier and converter stages. Two models using this circuit are the KRK-5 and KRK-7. In the KRK-7 unit the fine-tuning control is operated by a separate knob; otherwise the two units are practically the same.

The KRK-5 differs in several ways from the KRK-2 unit just described, although the push-pull oscillator is retained. The r-f amplifier and the converter are 6AG5 pentodes, operated single-ended, which makes possible higher r-f gain and a reduction in oscillator radiation, because the oscillator is better isolated from the antenna circuits and because less oscillator injection is required. Since less output is needed, the oscillator is operated at a lower plate voltage, reducing direct radiation.

The channel-switching arrangement remains the same, and the inductors of the tuned circuits are mounted on switch wafers, as before. Five wafers are used in KRK-5. Although two stages are single-ended, the grid of the r-f amplifier has a resonant circuit, which adds the extra wafer.

The R-F Amplifier and Converter. -- Either 300-ohm transmission line or 72-ohm coax may be used to bring the signals from the antenna. The elevator transformer, T_{115}, which has already been described, matches the transmission line or coax to the 300-ohm input circuit of the tuner. Both connections are shown at the upper left of Fig. 31-34.

The complete high-pass input filter is made up of L_{116}, C_{189}, L_7, C_{22}, and L_{67}. These components permit TV signals to pass, but block and bypass all frequencies below the lowest TV channel. They also provide a 300-ohm input impedance to match the output of the elevator transformer.

C_{20} is connected across the input circuit, effectively in parallel with grid resistor R_{11}, which broadens the response of the tuned circuit to about 10 to 15 mc. When this circuit is used in a fringe area where signals are weak, a 10,000-ohm resistor may be substituted for R_{11}. This reduces the bandwidth and improves the useful sensitivity, resulting in less snow in the picture, although the resolution may be less sharp with strong signals. In a

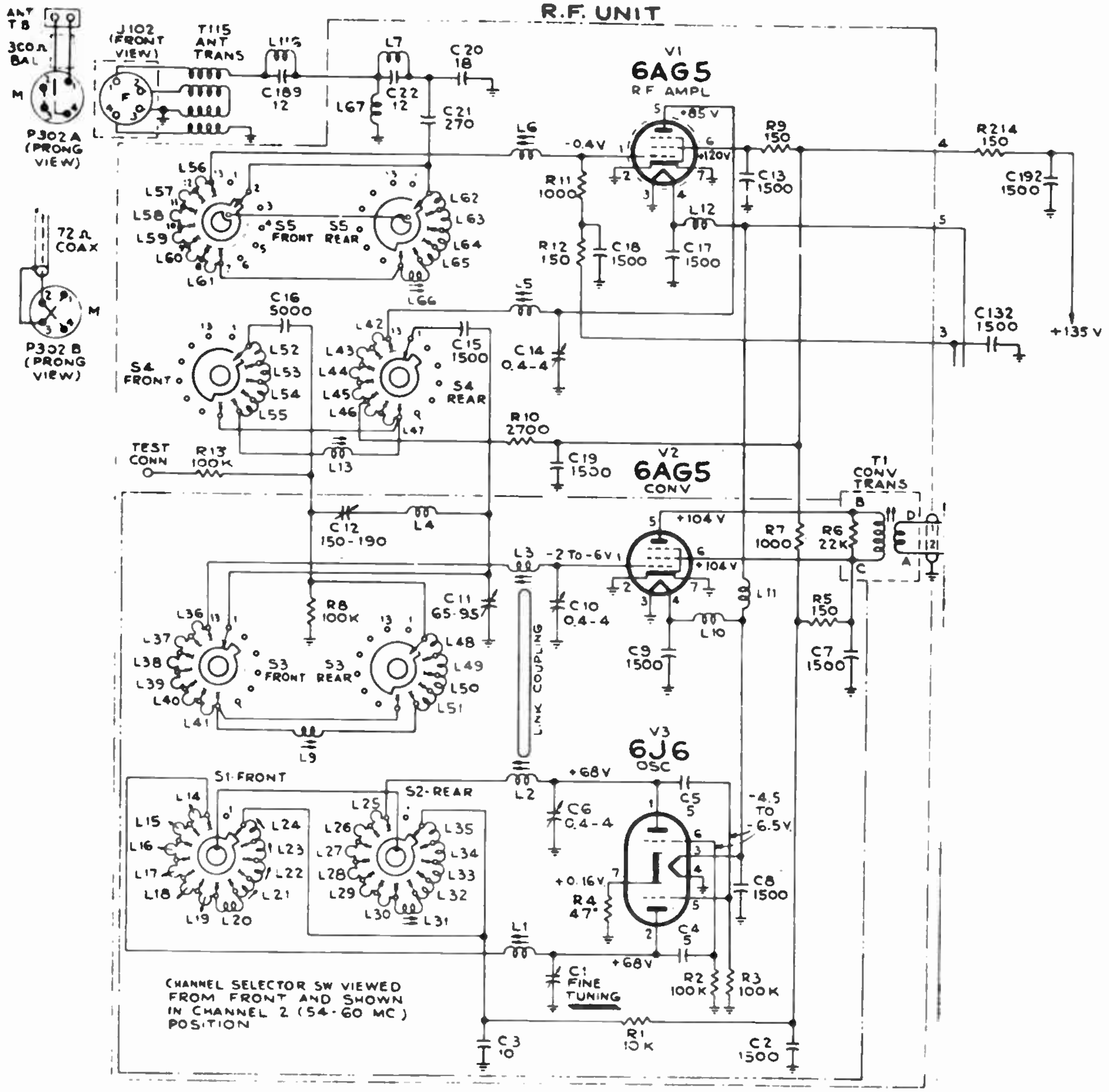

Fig. 31-34

modified version of the KRK-5, a 390-ohm resistor, R_{14}, is connected in parallel with C_{20}, and R_{11} is 10,000 ohms. In this circuit, the 390-ohm resistor provides the bandwidth, and is removed for fringe-area reception. When either of these changes is made, L_{66} must be touched up for the weakest low-frequency station. In stronger signal areas these changes should not be made, since they result in somewhat poorer picture quality. L_{66} should then be adjusted for normal flat response.

Capacitor C_{21} blocks the d-c bias voltage from the antenna circuit, where it would be grounded through L_7 and L_{67}. The C_{20}-C_{21} combination matches the output impedance on the filter and provides a step-of voltage to the grid of the tube, which results in a voltage gain of about 1.8 going into the 6AG5. L_6 is the inductance required to tune the highest-frequency channel, in conjunction with the input capacitance of the tube, and L_{56} to L_{66} are added one at a time to tune the lower channels.

The pentode r-f tube provides good isolation to prevent oscillator radiation by virtue of the low plate-control grid capacitance. After the preselected signal is amplified in the tube, it is sent to the tuned load circuit. Inductors L_5, L_{13}, and those mounted on the switch wafer are resonated by the tube output capacitance. On Channel 8 and below, R_{10} broadens the response of the resonant circuit to give the necessary bandwidth. In order to clarify the action of this output circuit and the coupling to the converter, the simplified version of Fig. 31-35 can be compared with the main circuit diagram.

Note that L_p, C_b, L_c and C_c are in series, and resonated by the tube output capacitance, C_o. L_c and C_c are also common to the converter input circuit, and form the coupling element between the two stages. When the r-f amplifier tube develops a signal voltage across the output circuit, the portion across L_c and C_c is applied to the grid of the converter tube. This coupling circuit (L_c and C_c) is only switched when going from the high-frequency channels to the low, or vice versa. The values used for L_c and C_c on either group of channels are such that the coupling circuit is series-resonant above the highest frequency of the group in use. At and near the resonant frequency, the combination amounts to a wavetrap, and bypasses these frequencies to ground. Therefore, the oscillator signal which is in the converter input circuit is effectively grounded, and prevented from working back toward the antenna. In addition, any image frequencies coming through the r-f amplifier are trapped here. To help eliminate stray coupling which might destroy the advantages of this arrangement, a grounded shield is used between the two stages, as shown. Small adjustments in bandwidth and degree of coupling can be made by varying the capacitor functioning as C_c, but care should be taken to avoid loss of gain.

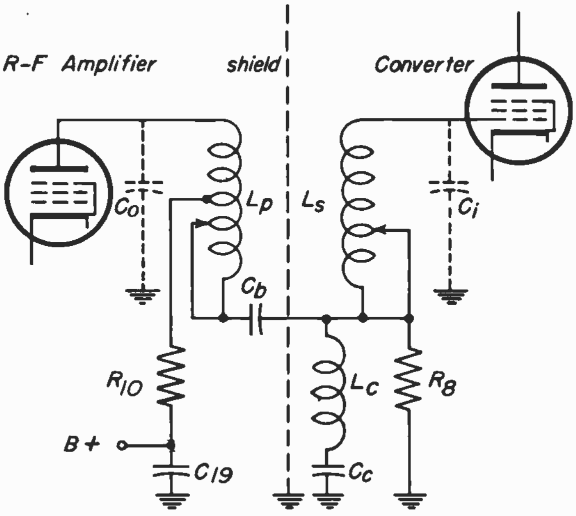

Fig. 31-35

Comparison of Fig. 31-35 with the main schematic for the KRK-5 shows that C_c is C_{11} for the high-frequency channels, and L_c is the inductance of the leads. On the lower channels, C_{11} and C_{12} in series make up C_c, while L_c is L_4 and the lead inductance. C_b is used to keep the r-f amplifier plate voltage from the grid of the converter. C_{15} performs this function on the high channels, and C_{16} on the low. C_{14} is a trimmer which is used to compensate for differences in output capacitance between r-f tubes. This capacitor is mounted within the coil L_5, and is used to track the high-frequency channels. The same function is handled in the converter input circuit by C_{10} and L_3. C_{13} and C_{19} are bypass capacitors and R_{13} is an isolation resistor which permits a scope to be connected to the test point for r-f sweep alighment.

The converter input tuned circuit is similar to that of the r-f amplifier stage. The grid-leak resistor is R_8; it develops the proper bias for the converter when the oscillator injection is at the proper level.

Conversion and amplification take place in the converter tube, a 6AG5 pentode, which operates into the load provided by the primary of T_1, the converter transformer. The tuning of this winding is broadened by the load resistor, R_6. A link is used to provide coupling to the secondary, which is mounted on the main chassis, some distance away. The coupling here is fairly critical, since it affects the receiver alighment. This is why an r-f unit from one receiver usually cannot be installed in another without re-alignment.

Chokes L_{10} and L_{11} and capacitor C_9 in the heater circuit are included to prevent r-f feedback, which can occur at TV frequencies because of the capacitance between the cathode and heater in heater-type tubes. A similar filtering action is provided by L_{12} and C_{17} at the heater of the r-f amplifier. R_5 is an isolation and dropping resistor for the converter plate voltage, and C_7 is a bypass capacitor to aid in keeping r-f out of the power supply.

The Local Oscillator. -- The push-pull local oscillator uses both halves of a 6J6 dual triode in essentially the same circuit as that employed in the KRK-2. The plate circuit is tuned to the desired frequencies by switching the inductors, which are as that employed by switching the inductors, which are mounted on two wafers. On one wafer, the inductors are adjustable, for tracking. It is important to have an adjustment for each channel, since for proper selection of channels the oscillator frequency is fairly critical. The tuning of the r-f and converter circuits is broad enough that adjustments are necessary only for Channels 6 and 13.

C_1 is the fine tuning control, which is mounted inside L_1. The fine tuning range is about 500 kc on Channel 2 and about 1,300 kc on Channel 13. Trimmer capacitor C_6 is the Channel 13 adjustment, and is located inside the Channel 13 inductor, L_2. C_4 and C_5 are the feedback capacitors and the bias is developed across R_2, R_3 and R_4. The decoupling network made up of R_1, C_2, and C_3 keeps r-f out of the power supply.

Link coupling is used to inject the oscillator signal into the converted grid circuit, although there is also some injection by direct radiation. Since the amount of oscillator energy required by this converter circuit is less than that needed in KRK-2, the oscillator can be operated at a plate voltage as low as 68 volts, resulting in less oscillator radiation.

TWO-TUBE SINGLE-ENDED TUNER

31-7. There are a number of differences between this tuner and the KRK-2 and KRK-5 units, but none are major changes. For instance, tuning is again accomplished by switching small values of inductance in or out of the circuit, and the inductors are mounted on ganged switch wafers. A single-ended triode converter stage is used, and the oscillator is a single-ended Colpitts type. These two stages are in a 6J6 envelope, providing a two-tube tuner with the r-f stage, as shown in Fig. 31-36.

The R-F Amplifier. -- The elevator transformer, T_{200}, provides matching between the antenna line and the receiver input, as in the KRK-5. The 100-MMF series capacitor, C_{202}, reduces interference from AM broadcast stations below the lowest television frequency, and also helps to reduce blocking due to strong signals. This is achieved because the value of C_{202} is such that it begins to offer some impedance to signals at frequencies just below the TV bands, the impedance increasing as the frequency is decreased. The increased impedance to these undesired signals results in poor matching into the filter network, but leaves the television frequencies unaffected. In this way, low-frequency inter-

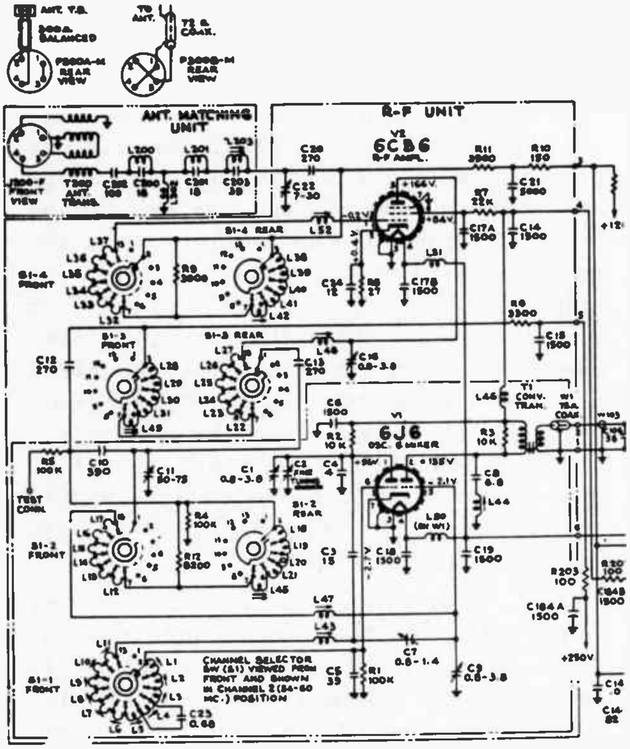

Fig. 31-36

fering signals are considerably attenuated before they reach the grid of the r-f amplifier tube.

The high-pass input filter, made up of L_{200}, C_{200}, L_{202}, L_{201}, and C_{201}, functions as explained previously. To this has been added an F-M trap, L_{203} and C_{203}, which is a parallel-resonant circuit, tunable from 90 to 110 mc to eliminate F-M interference. This trap can be reached for adjustment from the top of the r-f subchassis.

As shown by the broken line on the schematic, the entire input circuit, including the elevator transformer, the input filter and the F-M trap, is fully shielded to help prevent stray pickup of undesired signals.

The input and output tuned circuits of the r-f amplifier are very much like those of the KRK-5. The tube is a 6CB6, a newer pentode than the 6AG5, with better gain and a lower noise level. It also has a lower feedback capacitance (plate to control grid), which reduces oscillator radiation. A cathode-bias resistor, R_8, is added, bypassed by C_{24}. The values of these two components are such as to cut down large variations in the input capacitance, and the resultant detuning of the circuit when the AGC bias changes. The change in bias of the stage caused by a change of signal level still causes some detuning of the input circuit, but now it is utilized. When the bias is at a low level (a weak signal being received), the change in input capacitance shifts the circuit tuning slightly toward the picture carrier. This gives the picture carrier an improvement in gain and less noise. On the other hand, the AGC bias increases on strong signals, and the change in input capacitance of the tube shifts the tuning in the opposite direction, giving practically flat response, which is necessary for the best picture quality. For best results, the stage must be properly aligned and adjusted.

A narrower bandwidth is provided in the r-f stage of this tuner, varying from 8 to 12 mc. When the bandwidth of a tuned circuit is reduced, the result is always a higher gain *in the tuned circuit itself.* This, of course, adds to the total stage gain, and feeds a stronger signal to the converter.

Capacitor C_{22} determines the input coupling, and affects the voltage step-up to the r-f amplifier grid. This capacitor has a considerable effect on the tilt of the r-f response curve. C_{16} adjusts the tuning of the r-f plate circuit and also the frequency response of the converter-grid circuit, in conjunction with C_9, which is the converter-grid capacitor. If C_{22} is properly adjusted, C_9 will have a noticeable effect on the tilt of the response curve. Where signals are weak (fringe areas), C_{22} and C_{16} may require touching up to get the best possible picture and minimum of snow.

The Converter and Local Oscillator. Both the converter and oscillator stages are single-ended, using triodes which are combined in the single envelope of the 6J6 tube.

The converter circuit is much like that of the KRK-5. Capacitor C_{11} acts as the common coupling element, and allows adjustment of the bandwidth. Self bias is provided across R_4 by rectification of the injected oscillator voltage. R_{12} is a loading resistor which broadens the response of the input tuned circuit. C_{12} and C_{13} are blocking capacitors, which keep r-f amplifier plate voltage from the grid of the converter.

The converter output is fed into the primary of the converter transformer, T_1, which is loaded by R_3 to broaden the frequency response. The signal is transferred by a 75-ohm coax link to the input of the i-f amplifier. The use of the shielded link reduces the possibility of stray capacitive coupling, which might result in oscillator radiation from the main chassis. The series-resonant circuit composed of C_8 and L_{44} is inserted in the plate circuit to provide a capacitive reactance. This is done because the reactance of the plate load impedance has a definite effect on the grid circuit when a triode is operated at television frequencies or higher. The characteristic of the plate load is *reflected* into the grid circuit by the tube capacitance; this is called *Miller Effect*. When the plate circuit is primarily inductive -- as it would be here if only T_1 were present -- the input circuit is affected in such a way that the stage has a tendency to drop into oscillation easily. One way to avoid this would be to use a large capacitance across the output circuit, but this would reduce the gain of the converter. Instead, the series-resonant circuit is employed, tuned above the highest TV frequency. This provides the proper value of reflected capacitive reactance without loss of conversion gain.

L_{46} acts as a filtering choke to keep undesired r-f from the screen of the r-f amplifier away from converter and oscillator.

The oscillator is a Colpitts type, which takes feedback voltage from a capacitive voltage divider. The frequency is determined by C_2, the fine-tuning control, in parallel with C_1 and C_4. In series with these is C_5, across which the feedback voltage is developed. The basis circuit for the Colpitts oscillator was shown in Fig. 31-3 *a*. By referring to that drawing it can be seen that C_5 corresponds to C_8. R_2 is the plate dropping resistor, C_3 blocks the plate voltage from the grid, and C_6 bypasses both converter and oscillator energy to keep it out of the power supply. R_1 develops the self bias for the oscillator.

The small inductors which are switched to change the oscillator frequency are provided with the usual adjusting slugs and brass screws. They can be reached from the front of the cabinet when the escutcheon plate is removed. L_{43} is the inductor for Channel 13, and also provides a means of tracking all channels. However, this should not be changed unless absolutely necessary. If the change *must* be made, C_1 should be adjusted at the same time to maintain the proper L/C ratio, which is very important in this oscillator circuit. The L/C ratio is kept low to improve stability.

Oscillator energy is injected into the converter-grid circuit by means of capacitor C_7. Careful adjustment of C_7 is necessary to obtain the best converting action and conversion gain. The test point at R_5 affords a check on proper oscillator coupling. The voltage at the test point should be between 2 and 7.5 on all channels.

CASCODE TUNER

31-8. This r-f unit is used in a 44 mc i-f "intercarrier" type of receiver, where the sound is produced by letting the picture and sound intermediate frequencies beat together after they have passed through the picture i-f stages. As a result, the sound is not dependent upon exact adjustment of the r-f local oscillator, and oscillator drift and microphonics are not of great importance. Also, it is possible to design the r-f unit for better selectivity and rejection of narrow-band interference, without lowering sound quality. This results in an improvement of picture gain in fringe areas.

In the receiver for which this tuner was designed, the intermediate frequency has been raised to 45.75 mc for picture and 41.25 mc for sound. This results in a reduction of image interference, because the image frequencies are removed an additional 20 mc from the desired frequencies.

The principle changes in this tuner appear in the r-f amplifier stage, particularly in the use of a driven grounded-grid amplifier in a "totem" r-f amplifier circuit. The single-ended triode oscillator is similar to the KRK-8, but a pentode is used in the converter stage. These are combined in a single envelope, in the 6X8 tube. Shielding is even more thorough than in previously-discussed units.

The R-F Amplifier.--As shown in Fig. 31-37, the input from the antenna line is connected to T_2, the elevator transformer, which provides a match into the two i-f traps and the high-pass filter. The adjustments of these inductors are extremely critical, and no changes should be made without proper test equipment. The input filter gives very sharp cut-off just below the lowest TV frequency, and the voltage response is at least 200 times down at all frequencies below 47 mc. This high attenuation so close to Channel 2 can cause serious loss on that channel if incorrectly adjusted. In addition, the filter is so designed that maximum rejection occurs at the i-f frequencies, 41.25 and 45.75 mc, to prevent i-f interference. The F-M trap, L_{58} and C_{24}, may be adjusted by turning a threaded core of powdered iron inside the coil. This is a simple parallel-resonant circuit, but it has a high Q and gives efficient rejection from 88 to 108 mc.

The operation of the "totem" r-f circuit has already been described in detail. This section will simply point out the components on the actual schematic.

The inductance of the input tuned circuit is split, and mounted on two separate switch wafers in order to achieve the required impedance to the grid of the r-f amplifier. C_{19} prevents the AGC bias voltage from being grounded in the input filter. The bias voltage is applied at the junction of C_{19} and R_{11}. R_{11} and R_{12} (in parallel for the low-frequency channels) act as loading resistors to broaden the tuned circuit response. C_{18} provides the lumped capacitance for tuning the tank circuit, in parallel with the distributed capacitance. R_9 and R_{10}, bypassed by C_{17}, compensate for the detuning effect of large variations in the AGC bias.

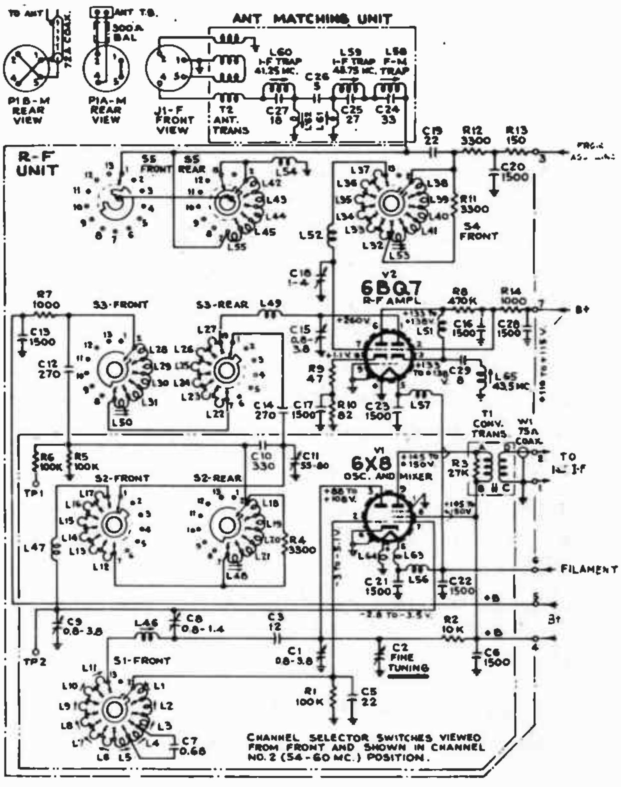

Fig. 31-37

The input side of the 6BQ7 provides a good signal-to-snow ratio, but very little gain. Its plate is connected to the cathode of the second section through L_{51}, which forms a series-resonant coupling circuit with the input capacitance. C_{29} and L_{65} make up a trap which can be tuned to 43.5 mc for additional rejection of i-f interference. The second section of the tube is biased to follow the first section (as previously explained) by the voltage developed across R_8. The other biasing resistor and the 115-volt reference point are not located on the r-f unit subchassis, and are not shown on the schematic. R_{14}, C_{16}, and C_{28} form a decoupling network.

The plate circuit of the r-f amplifier is a straightforward arrangement, coupling to the converter input through C_{12} on Channels 2 to 6 and through C_{14} on the higher channels. C_{10} and C_{11} are the common coupling elements, effectively in series on the low channels, in parallel on the high channels. C_{15} tunes the plate circuit of the r-f stage, and C_9 the input of the converter, while C_{11} can be used to vary the degree of coupling and bandwidth. R_7 is a dropping and isolation resistor for the r-f stage plate supply.

The Converter and Local Oscillator. -- After passing through the inductors of the converter input circuit, the incoming r-f signal is combined with the injected oscillator voltage at the grid of the pentode section of the nine-pin miniature 6X8 tube. The pentode converter provides better oscillator isolation than a triode converter. Signal bias for the converter is developed across R_5 by the rectified oscillator voltage.

The converter transformer, T_1, operates in the same way as that of the KRK-8, but is resonated to the higher i-f frequency. The tuning is broadened by load resistor R_3 to cover the necessary bandwidth, and a coax link is used to transfer the signal to the first i-f stage.

The oscillator is a single-ended Colpitts circuit, using the triode section of the 6X8 tube. It is very similar to the oscillator used in the KRK-8. Capacitors C_1 and C_2 (the fine-tuning control), connected in parallel, determine the frequency of the oscillator, while the feedback voltage is developed across C_5. The fine-tuning control has a range of 2 mc on Channel 6 and 4 mc on Channel 13, making adjustment for the best possible picture easier. Since the intercarrier system is used with this r-f unit, the fine-tuning range can be made much wider with no loss in sound quality. For the same reason, microphonics and oscillator drift are minor problems.

The oscillator frequency is 20 mc higher for each channel than in previous units, to produce the 45.75 mc picture i-f, but the arrangement of the inductors on the switch wafer is the same. As in the other units, they are available for adjustment when the escutcheon plate is removed. L_{46} is a tracking adjustment *only*, for bench alignment. Channel 13 should be tuned by adjustment of C_1, which is also used for compensation of tube capacitance when a new oscillator tube is inserted.

The signal bias for the oscillator is developed across R_1. R_2 is a voltage-dropping resistor for the plate supply, and C_3 blocks the plate voltage from the grid of the tube. Capacitive coupling to the converter grid is provided by C_8, which is variable to permit adjustment of the oscillator injection for the most efficient conversion and the best conversion gain.

PART II—SERVICING THE R-F SECTION

ADJUSTMENTS IN THE R-F TUNER

31-9. Most front ends have several types of adjustments in common. These are:

1. F-M trap adjustments
2. Oscillator adjustments
3. R-F amplifier adjustments
4. Mixer adjustments

Of these, the first two may be made in the field without any test equipment. The The other two are usually made only in the shop, save for minor touch-ups. The oscillator adjustments in a TV set are of the greatest importance, and are usually quite critical. In spite of this, oscillator adjustments may be made in the field without the use of any test equipment. Oscillator adjustments are important because, in any superheterodyne, the oscillator frequency "selects" the desired station by heterodyning with the incoming station frequency to produce the required intermediate frequencies. Thus, if the oscillator frequency for any one channel or a number of channels is incorrect, it may be impossible to receive the channel at all. The r-f amplifier and mixer adjustments are not nearly as critical, since they affect only the *amplitude* of the received signal. Also, the oscillator must be adjusted for *every* channel, which is not true of the r-f and mixer tuned circuits.

Methods of Tuning. -- Methods of tuning differ for various types of front ends. Many sets use a switching arrangement which changes the tuning inductance in steps as the switch is rotated. The simplified diagram of Fig. 31-38 illustrates this system.

Note that increments of inductance are added (or subtracted) as the switch is

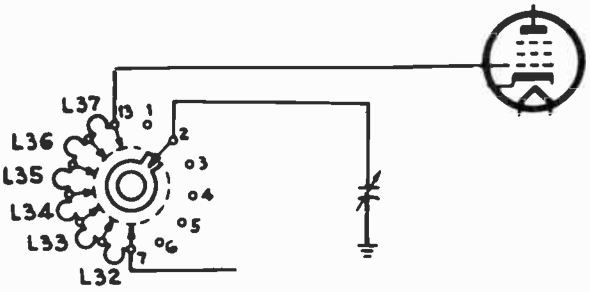

Fig. 31-38

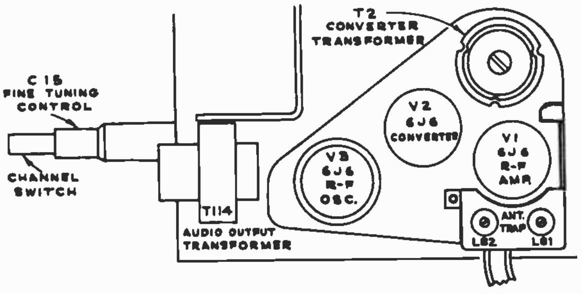

Fig. 31-39

rotated, thus changing the tuning of the grid (or plate) circuits. Therefore, adjustments of the oscillator frequency on one channel affect the tuning on other channels. The tuning capacitance remains substantially constant, except for changes in stray capacities.

Other types of tuning arrangements are also used. For example, there is a "turret tuner", in which individual tuned circuits for each channel are mounted on a rotary drum. Channels are changed by rotating the drum, which connects different sets of tuned circuits to the fixed contacts. In this type of tuner, adjustments of the oscillator frequency on one channel do not change the tuning of other channels.

Another type of front end utilizes "continuous" tuning. In this arrangement, there is no switching. Tuning is accomplished by a contacting slider, which runs along a tuning inductance as the coil is rotated. Thus the inductance is effectively "tapped" continuously. Variable condensers can also be used for continuous tuning. Most continuous tuners do not have individual oscillator adjustments for each channel, but a tracking adjustment for the complete oscillator frequency range.

Since adjustments for various types of front ends are different, we will consider in detail four typical tuners; the KRK-2, KRK-5, KRK-8, and KRK-11. Fig. 31-39 is a top view of the KRK-2 chassis, showing the front end and its top adjustments.

F-M Trap. -- The F-M trap adjustments, L_{81} and L_{82}, appear at the lower right. These adjustments reduce the effects of F-M broadcast interference and double-conversion TV interference. This trap can be adjusted in the field. Tune in the station on which interference is noted, then adjust L_{81} and L_{82} for minimum interference. Keep both adjusting screws at about the same height. Then alternate the adjustment from one screw to the other until minimum or no interference is obtained.

Associated Sound Trap. -- The converter transformer, T_2, is located on the front-end subchassis unit, as shown in Fig. 31-39. The top adjustment is for the associated sound take-off and trap. If necessary, this adjustment may be made in the field without the use of any test equipment. The following procedure is used.

Switch to an operating channel and tune the station very carefully, using the fine-tuning control, for best sound. Adjust the top screw of T_2 to eliminate sound bars in the picture.

Oscillator Adjustments. -- In making oscillator adjustments with the set in the cabinet, a very long, thin screwdriver is required. A non-metallic tool is desirable, to prevent detuning of the oscillator, if one can be found with the necessary mechanical strength. When a metallic screwdriver is used, the metal blade detunes the circuit. It is therefore necessary to overshoot the adjustment, so that when the screwdriver is removed, the adjustment will be correct. With a little practice, the amount of overshoot required can be estimated quite accurately.

Sometimes the adjusting screws extend into the tuning coil. The only insulation on these coils is a varnish coating. Since there is usually B plus on the oscillator coil, if an adjusting screw contacts an uninsulated portion of the coil, there will also be B plus on the screw. A metal screwdriver may short B plus to ground if it touches the metal face plate of the tuner and the screw at the same time. This causes picture and sound to disappear intermittently, resulting in static in the sound and flashing in the picture. This makes the tuning procedure difficult. To avoid this, many technicians make a practice of insulating the metal screwdriver blade with a length of spaghetti.

In this type of tuner, the oscillator adjustments for Channels 6 and 13 cannot be made from the front, as will be shown later. The location of oscillator adjustments available from the front is shown in the sketch of Fig. 31-40.

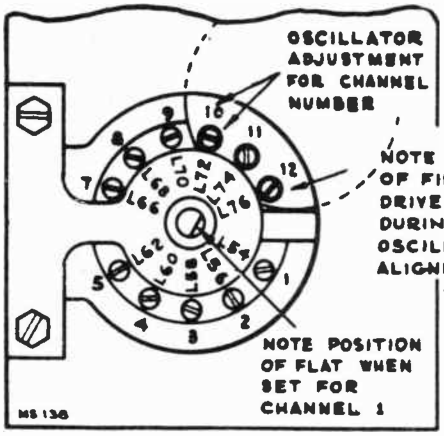

OSCILLATOR ADJUSTMENTS FOR CHANNELS 6 AND 13 ARE ON SIDE OF R.F. UNIT

Fig. 31-40

Note that adjustments for Channels 1 through 5 and 7 through 12 are available from the front. This tuner has a provision for Channel 1, which is no longer used for television. Later tuners omit Channel 1.

In adjusting the oscillator, it is necessary to remember an important feature of the channel switch. The switch causes inductance to be added in small steps. Therefore, Channel 13 has the smallest amount of inductance, Channel 12 has slightly more, and so on until Channel 2, which has the largest amount of inductance, is reached. This means that any change in oscillator adjustment may affect *every other* channel down to Channel 2. In other words, it must be remembered that *all the channels below the one being adjusted will also be affected.* However, the channels *above* the one being adjusted will *not* be affected.

A TV set may require oscillator adjustments if some channels are received but others are not. It may also be required if some channels are received properly but either the picture *or* the sound cannot be received on other channels.

In this tuner, if the oscillator tube is replaced, it may be necessary to realign the oscillator on all channels. Sometimes this can be avoided by trying a number of tubes for the oscillator until one is found that operates properly without readjustment. On some of the newer tuners, this difficulty is eliminated by the addition of a compensating trimmer condenser. This feature will be discussed more fully later.

The procedure used to adjust the oscillator depends upon which channels need adjustment. Assume that the oscillator tube has been changed and that all channels are off. Adjustment begins with the highest channel operating in the area, and continues down to the lowest channel. Suppose the highest channel is Channel 13. In this tuner, the Channel 13 adjustment cannot be reached through the front of the chassis; the chassis must be removed from the cabinet. The adjustment is located at the side of the front end, as indicated in Fig. 31-41.

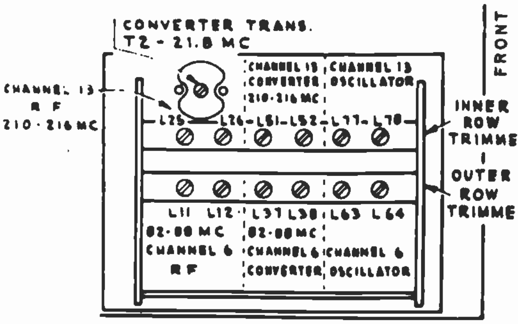

Fig. 31-41

Note that there are *two* oscillator adjustments for Channel 13, and two for Channel 6. There is only *one* adjustment for each of the remaining channels. Adjustment procedure is as follows: set the selector switch to Channel 13, and the fine-tuning control to the middle of its range (R). Adjust L_{77} and L_{78} until the sound comes in properly. Keep the two adjustments the same height by visual inspection. Which adjustments are made next depends on which other channels are operating in the area. Assume that these are Channels 11, 9, 7, 5, 4, and 2. If Channel 13 comes in properly, switch to Channel 11 and adjust the oscillator through the *front*. as shown in Fig. 31-40. Note the position of the fine-tuning drive wheel. The aligning tool is inserted through the holes in this wheel. As before, adjustment is made for correct sound. If it is difficult to adjust one of the channels, and the next *higher* channel is not used, the desired channel may be brought in by adjusting the next higher channel. For instance, if trouble is encountered in receiving Channel 7, and no station broadcasts on Channel 8, Channel 8 may be adjusted to help in receiving Channel 7. The next channel to be adjusted is Channel 5. Try adjusting Channel 5 from the front. If this proves impossible, the two side adjustments for Channel 6 (shown in Fig. 31-41) may be used to bring in Channel 5. When Channel 5 is received properly, adjust Channel 4, then Channel 2. If Channel 2 proves difficult, and no station is on Channel 3, Channel 3 can be adjusted to help in receiving Channel 2.

This is the complete alignment procedure for all channels. However, it is not always necessary to adjust all channels. Only those channels which require it should be adjusted. However, always start with the highest channel, and work down to the lower channels.

Let's see what might happen if this order of adjustment were not followed. Suppose in an r-f unit the picture is received, but there is no sound, on Channel 11 or Channel 4. All other channels are working properly. Normally, Channel 11 is adjusted first. Next, each channel below is adjusted, progressing from Channel 10 down to Channel 4; Channels 3 and 2 are then adjusted if necessary.

Now suppose we adjust Channel 4 first, instead of Channel 11. This would probably make necessary readjustment of Channel 2. Having completed these adjustments, we now adjust Channel 11. But in adjusting Channel 11, we throw off Channel 4 and all the other channels below Channel 11! It must be remembered, therefore, that any change in the tuning constants (inductance and capacitance) of a particular channel changes the tuning of all lower-frequency channels.

R-F Amplifier and Mixer Adjustments. -- Although there is an oscillator adjustment for each channel, this is not true for the r-f and mixer tuned circuits. These are adjusted only on Channels 13 and 6. Except for minor touch-ups, these adjustments are not ordinarily made in the field. The location of the adjustments is shown in Fig. 31-41.

Front End Adjustments in the KRK-5. --In this tuner, the r-f amplifier and mixer are single-ended circuits, while the oscillator is a push-pull circuit.

Oscillator Adjustments. -- This tuner has no provision for Channel 1. Oscillator adjustments available through the front are provided for Channels 2 through 5, and 7 through 12, as shown in Fig. 31-42.

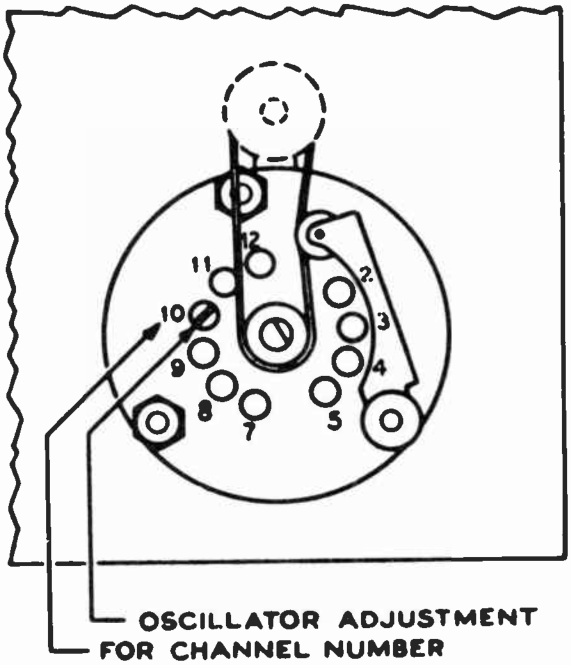

Fig. 31-42

All the adjustments except for the channel to which the unit is tuned are blocked by a fiber wheel. This wheel rotates as various channels are switched in, so that each adjustment becomes accessible in turn. The position of the "flat" bears no direct relation to the channel in use. However, the channel in use can be determined by observing which oscillator adjustment is *open*, except for Channels 6 and 13. The adjustment for Channel 13 (C_6) is on top of the chassis, as shown in Fig. 31-43.

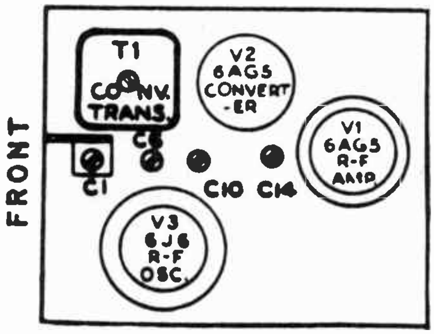

Fig. 31-43

The oscillator adjustment for Channel 6 (L_{31}) is at the side, as shown in Fig. 31-44.

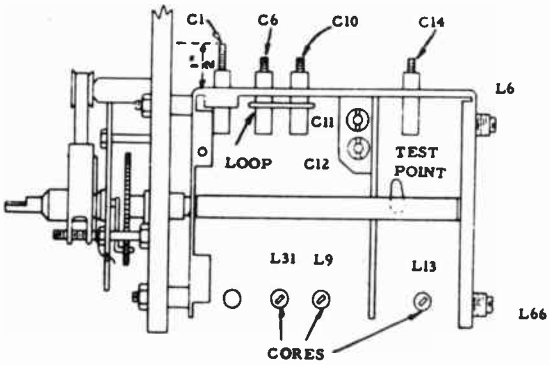

Fig. 31-44

The procedure for making field oscillator adjustments is basically the same as that outlined before. However, in this tuner there is only one adjustment for Channel 13, and only one for Channel 6. Nevertheless, the oscillator circuits are the same. When oscillator tubes are changed, compensation may be made by adjusting the Channel 13 trimmer, which affects all channels. It is not necessary to readjust each channel when replacing the oscillator tube. This is because the Channel 13 adjustment (C_6) is designed to compensate for the variation of interelectrode capacities of different oscillator tubes. The trimmer is on top of the chassis, and may be reached through the back of the cabinet.

R-F Amplifier and Mixer Adjustments. -- These adjustments are not normally made in the field except for touch-ups. Some of these adjustments, shown in Fig. 31-44, are:

Channel 6 mixer -- L9
Channel 6 r-f -- L13
Channel 6 antenna -- L66
Channel 13 antenna -- L6
High Channels (7-13) r-f -- C14
High Channels mixer -- C10

Front End Adjustments in the KRK-8. -- This front end uses two tubes instead of the three found in the previously-discussed front ends. All circuits are single-ended. An FM trap is provided, which can be adjusted from the top of the r-f unit (L203), as shown here:

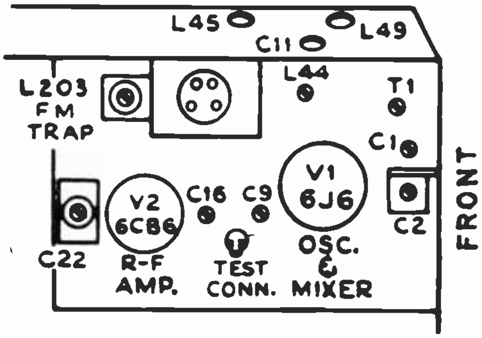

Fig. 31-45

Procedure for adjusting the FM trap in the field is similar to that used for the first tuner discussed.

All oscillator adjustments for this tuner may be made without removal of the chassis from the cabinet. The adjustments for Channels 2 through 12 are shown in Fig. 31-46.

The adjustment for each channel may be reached, when the unit is switched to that channel, through a hole in a fiber wheel. Adjustment for Channel 13 is usually made by means of C_1, which is shown in Fig. 31-45. C_1 is also used to compensate for a new oscillator tube, which may affect the tuning of all channels. A track-

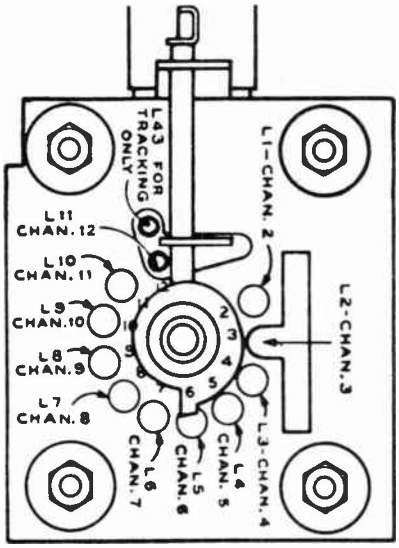

Fig. 31-46

ing adjustment, L_{43}, is available when the tuner is switched to Channel 13. This is used only in cases where it is impossible to get some or all of the channels to track properly using the ordinary adjustments.

When a set tracks properly, all of the channels may be received with the fine-tuning control near the center of its range.

Normally, the set is tuned to track correctly by means of the usual oscillator adjustments for individual channels. If this cannot be achieved, the tracking adjustment must be made. The tracking adjustment, L43, can be reached through the front when the tuner is switched to Channel 13. When L_{43} is adjusted, it is usually done in conjunction with C_1 for proper tracking. Since this is a single-ended oscillator, there are no dual adjustments for any channel. The same is true for the r-f and mixer circuits. The procedure for adjusting the oscillator is the same as for other tuners.

As in the previously discussed tuner, the position of the flat on the detent shaft does not indicate the channel in use. This can be determined by the hole in the fiber wheel.

R-F Amplifier and Mixer Adjustments. -- Some of these adjustments, shown in Fig. 31-45, are as follows:

Channel 6 r-f -- L49
Channel 6 mixer -- L45
High channels (7-13) r-f -- C16
High channels (7-13) mixer -- C9

The antenna adjustments for Channels 13 and 6 are on the back of the tuner, as shown in Fig. 31-47.

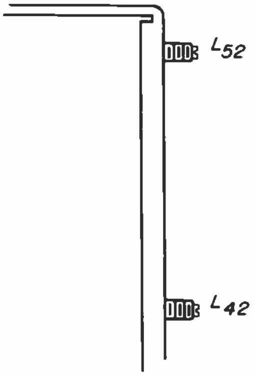

Fig. 31-47

These are:

Channel 13 antenna -- L52
Channel 6 antenna -- L42

Front End Adjustments in the KRK-11. -- This is the r-f tuner used with the new intercarrier-type receivers. In an intercarrier-type receiver, the procedure for adjusting the oscillator is somewhat different. This does not refer to the order of alignment, which is the same, but to the proper indication of correct oscillator frequency. In the split-sound type receivers, the oscillator is tuned for best sound. However, this procedure is not effective in intercarrier receivers, since the sound i-f is produced by the 4.5 mc beat frequency between the picture and sound carriers. Thus, even with the oscillator badly mistuned, it may be possible to get good sound. Since the sound cannot be relied upon for oscillator tuning, the picture must serve as an indicator. Tune the oscillator for the best picture, being careful that no sound bars appear in the picture. This will provide a satisfactory oscillator adjustment. When adjusting the oscillator, the fine tuning control should always be set at the center of its range.

The front oscillator adjustments are identical with those of the KRK-8. These and other adjustments are shown in Fig. 31-48.

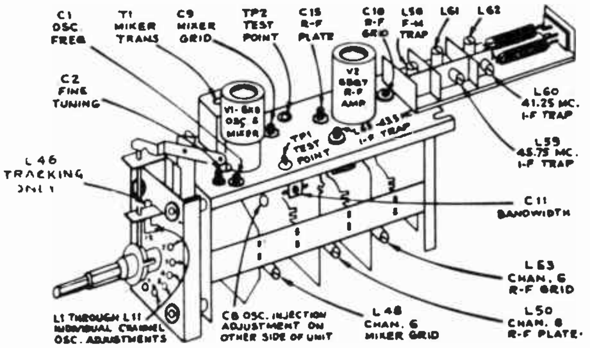

Fig. 31-48

When changing oscillator tubes in this tuner, it is not necessary to retune all channels. Compensation for all channels may be made simultaneously by adjustment of C1 (Fig. 31-48). If difficulty with tracking is experienced, adjust L46 and C1 together.

FM Trap Adjustment. – An FM trap (L58) is provided, and may be adjusted in the field. The procedure for making this adjustment has already been discussed. In some sets the FM trap will tune down into Channel 6, and even into Channel 5. If these channels are to be received, care must be taken that the FM trap does not affect sensitivity on them.

A word of caution is required concerning some adjustments, particularly the i-f trap adjustments L59 and L60. These should *never* be adjusted in the field, since special equipment is required for proper adjustment. The same is true for L61 and L62, which are band-pass filter adjustments.

LOCALIZING TROUBLES TO THE R-F UNIT

31-10. When a TV receiver has a normal raster but no picture or sound, the trouble must be in a section which handles both types of information. Both the sound and picture carrier signals are handled by the r-f section, and converted to the intermediate frequencies of the receiver. Therefore, if the r-f section is inoperative, there can be no picture or sound. In receivers in which the sound is tapped off in an i-f stage following the mixer, a defect in the i-f stage may also cause loss of both picture and sound. This will be discussed further in the next lesson.

Types of Tuner Trouble. --- In general, a tuner may become defective in one of two ways: (1) it may tune incorrectly, or (2) it may have insufficient signal amplitude in the output. *Tuning* troubles are usually due to incorrect *oscillator frequency* on one or more channels. *Amplitude* troubles are usually caused by defects in the r-f amplifier, mixer, or antenna. Thus, some troubles may be related specifically to the oscillator, and others to the r-f amplifier, mixer, or antenna. For example, if there is a picture, but no sound, on one or more channels, but normal picture and sound on other channels, the trouble is likely to be incorrect oscillator frequency on the bad channels.

The effect of oscillator detuning may not be so apparent in *intercarrier* receivers, where picture and sound may come in together even if the oscillator is badly mistuned. However, troubles affecting oscillator frequency can usually be recognized, since they frequently affect picture strength and quality on some channels, but not on others.

Intermittent Troubles. -- In troubleshooting tuners (as well as other units), we are concerned with two general types of troubles: (1) those which are continuous and (2) those which are intermittent. Intermittent troubles are more prevalent in tuners because of their complex switching arrangements. The best approach to an intermittent type of trouble usually is to make the trouble appear. Once it is present, normal procedure can be used to localize it. An intermittent might be made to appear by flexing or rotating the shaft. In other cases, tapping the tuner (sometimes quite hard) may cause the trouble to reappear.

SNOW AS A TEST INDICATION

31-11. The presence or absence of snow can frequently be used in localizing amplitude troubles. For purposes of troubleshooting, we may consider that all snow is generated in the mixer stage. A properly operating mixer always generates about the same amount of snow (noise), regardless of the strength (or absence) of its input signal. Therefore, whether or not the picture is snowy is determined by the *amplitude* of the input signal to the mixer. If the input signal is weak, the picture appears snowy.

The factors which determine the amount of snow appearing in the picture are:

1. The signal strength available at the receiving antenna.
2. The condition of the antenna and transmission line.
3. The gain of the r-f amplifier.

A snowy picture is normal in a weak signal area. However, a *trouble* which causes a snowy picture must be due to a defect in the antenna, transmission line, or r-f amplifier.

A trouble which causes weak picture and sound *without* making the picture snowy is localized to a circuit between the mixer and the sound take-off point. This may include the mixer stage itself.

A trouble which causes a weak but not snowy picture, but does not affect the sound is localized between the sound take-off point and the kinescope grid.

OSCILLATOR INJECTION VOLTAGE

31-12. A simple method of determining whether or not the r-f oscillator is working properly is by measuring the d-c mixer grid bias. A test point is provided for this measurement, as shown in Figs. 31-44, 31-45, 31-48. This grid-leak bias is developed in the mixer tube as a result of the oscillator signal, and is usually at least two volts (negative). The presence of correct mixer bias shows that both the oscillator and the mixer input circuit are working properly. The absence of mixer bias voltage usually means that the oscillator is not operating. It does not *always* mean this, however, since it may also be caused by a defect in the mixer grid circuit. To determine definitely which is the case, the oscillator grid bias is measured with a voltmeter. If grid bias is present, the oscillator is working. The absence of grid bias indicates that the oscillator is dead. This principle was discussed in detail in Lesson 26.

EFFECT OF A TROUBLE ON VARIOUS CHANNELS

31-13. When a defect is located in a part of the channel selector which relates to a particular channel, we know the trouble will appear on that channel. In some tuners, a trouble originating in one channel may also affect other channels. This is not the case with turret tuners, because in these tuners a separate set of tuning coils is switched into position for each channel. In tuners with channel selectors which operate by adding inductances, however, trouble in one channel may affect other channels as well. This can be seen by examination of Fig. 31-49.

Suppose coil L60 should open. When the shorting bar is in the Channel 5 position, L60 is not in the tuning circuit, and has no effect. This is also true for Channels 6 through 13. However, if the shorting bar moves to the Channel 4 position,

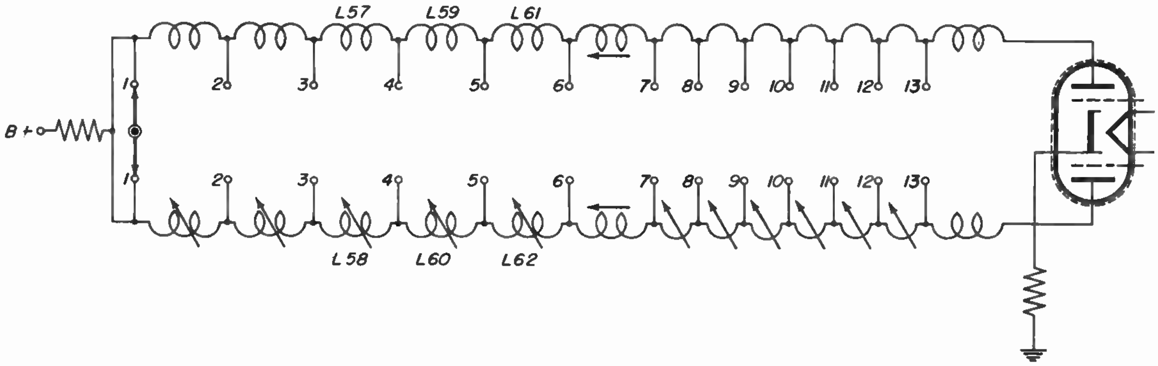

Fig. 31-49

or to any channel below Channel 5, an open exists in the tuning circuit. This fact can aid considerably in troubleshooting the tuner. If, for example, Channels 5 through 13 can be received properly, but Channels 4 and 2 cannot, the defect must be in a portion of the tuning circuit between Channel 5 and Channel 4.

LOCALIZING TROUBLES WITHOUT REMOVING R-F UNIT

31-14. Because many tuners are completely enclosed in a metal shield, certain obstacles to troubleshooting arise which are not present in other circuits. The tuner cannot be removed from the shield case without disconnecting it from the main chassis. Once such a tuner is removed from its case, it can only be operated by extension cables or in a test jig. Because of these difficulties, it is very desirable to localize the trouble as much as possible while the tuner is in its case and connected to the main chassis. This can be done by voltage measurements at the wiring terminals and tube sockets, and by interpretation of the symptoms which the trouble presents.

In the field, a serviceman who has determined that a trouble other than tube failure exists in the tuner, is confronted with one of three alternatives. He can repair the unit in the customer's home, he can bring the tuner to his shop, or he can replace the tuner. All three methods require removal of the chassis from the cabinet. The first and third methods require the removal of the tuner from its shielded case as well. Obviously, it is desirable to localize the trouble while the tuner is still connected to the main chassis. After localization, the serviceman can better choose which method to adopt.

Voltage Measurements. -- The easiest way to measure socket voltages in a tuner is by pulling out the tube and measuring the voltage through the top of the socket. Two factors must be taken into consideration when doing this.

1. When reading from the top of the socket, the pins are numbered *counterclockwise;* just the opposite of reading from the bottom of the socket.

2. When the tube is out of the socket, *applied* voltages, not actual operating voltages, are measured, since there is no plate or screen current to cause drops across the resistance of these circuits.

Operating voltages can also be measured from the top of the tuner with the tube plugged in, by lifting the tube partly out of its socket and touching the appropriate tube pin with the voltmeter prod.

Plate Decoupling Resistors. -- The r-f unit usually consists of three stages; the r-f amplifier, converter (mixer), and r-f oscillator. Each tube requires B plus voltage to the plate and screen grids. This is supplied by a B plus distribution circuit, which includes series- or parallel-connected decoupling resistors. These resistors are important in troubleshooting because the only appreciable d-c voltage drops in the tuner appear across them. This becomes more evident when the nature of the plate loads which appear in the tuner is considered. These plate loads are small, high-frequency coils, having negligible d-c resistance, and therefore an insignificant voltage drop across them. This is the first significant point in localizing trouble in the tuner. The d-c voltage drops in the tuner, which help to localize troubles, take place across the decoupling resistors, and not across the plate load coils.

Fig. 31-50 illustrates the principles of localizing shorts in the tuner while it is still connected to the main chassis.

Under normal operating conditions, voltage drops appear across plate decoupling resistors R_1, R_2, and R_3. Subtracting these drops from B plus leaves some value of "normal" plate voltage. Since there is no drop across the coils, the same voltage appears at point A as at point B in V1, and similarly in V2 and V3. In *a* of the figure, assume the B plus voltage to be 150 volts, and the *normal* drop across each decoupling resistor to be 50 volts. The difference, 100 volts, is the normal plate voltage on all three stages.

Localizing the Short. -- In *b* of the figure, assume that a short exists at point B. It was shown in Lesson 26 that a short of

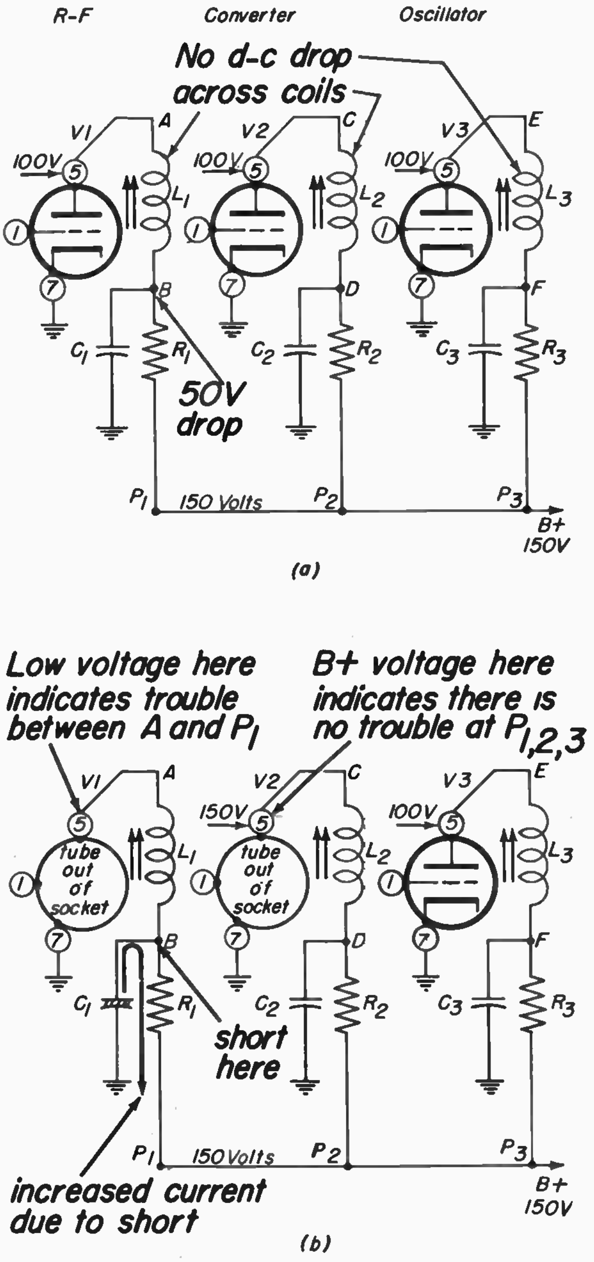

Fig. 31-50

this type would cause the plate voltage to be low, In fact, a "dead" short (zero resistance) would cause the plate voltage to drop to zero. The plate voltages of all three tubes (in their sockets) are measured, and the plate voltage of V1 is found to be low. The plate voltages of the other two tubes are normal. This localizes the trouble to the circuits of V1. Low plate voltage may be caused by several conditions, so to further localize the trouble V1 is unplugged, and the plate voltage measured again. It is still low. This localizes the trouble to the plate circuit of V1 (between A and P_1), rather than in other circuits of the tube. Low plate voltage could be the result of a low B-plus supply voltage. This should be checked first. The B plus *should* be measured at the point where it feeds into R_1 (point P_1). However, P_1 is not accessible because the tuner is enclosed in a metal case. Fortunately, there is a simple method of overcoming this difficulty. The same B-plus supply feeds all three plates. If V2 (or V3) is removed from its socket, the full B plus will appear at the plate pin of the socket. With the tube removed, there is no voltage drop across the decoupling resistor and the full voltage appears at point C of V2, or point E of V3, as the case may be. Assume the B-plus voltage to be normal. This narrows down the trouble to between points A and B. Something is causing a short between these two points and ground. We cannot localize any further because point B is not accessible at this time. However, for practical purposes, this localization is sufficient. We may suspect a defective condenser at point B (C_1), or a wiring short between points A and B to ground. Now, we are ready to remove the tuner from the main chassis. We know precisely where to look for the trouble. Since in this case it is a short, it can be tracked down using an ohmmeter, without applying operating voltages to the tuner.

Localizing Short with Series Decoupling Resistor. -- In some cases, the plate voltages of two tubes may be low, while the third tube has normal plate voltage. A simplified circuit showing how this might occur is given in Fig. 31-51.

With the tubes out of the sockets, the plate-terminal voltages of V1 and V2 are found to be low, while the plate-terminal voltage of V3 is normal (equal to B plus). The fact that the plate-terminal voltage of V3 is normal indicates that:

1. The B-plus supply voltage is not at fault.
2. There are no shorts between points E and P_3.

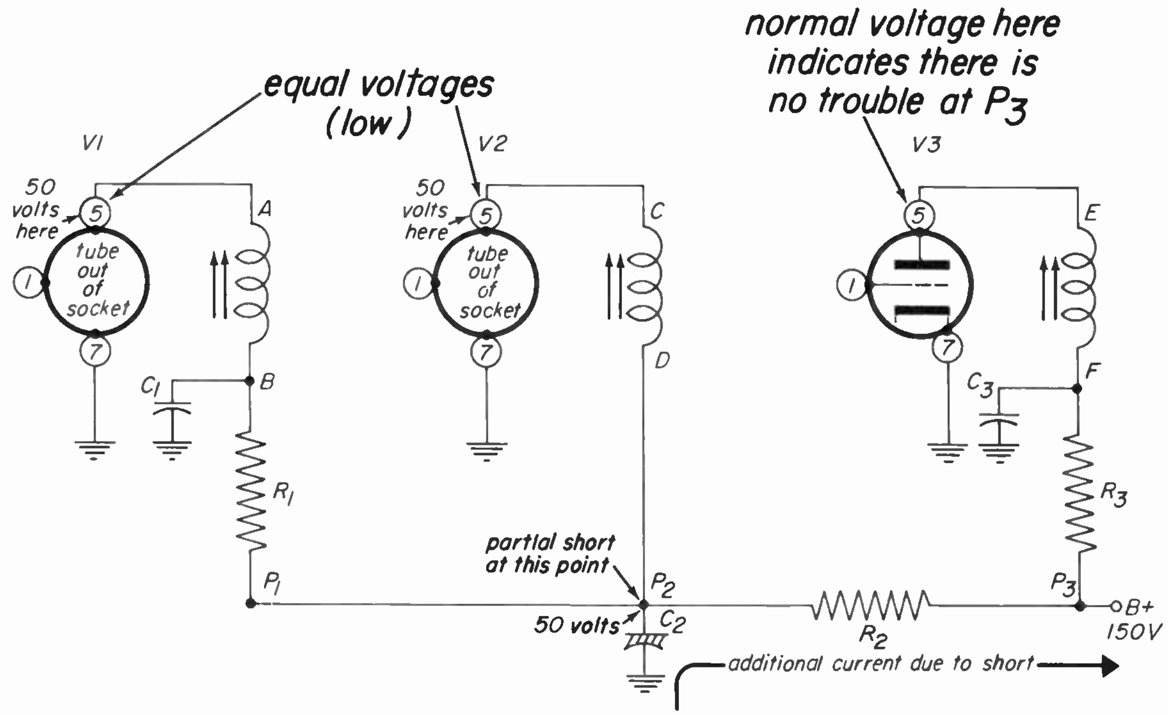

Fig. 31-51

There are two possible causes for low voltages at V1 and V2. A short might exist at P_2 or at B. It is necessary to determine at which point the short exists before removing the tuner from the main chassis. Fortunately, this is not difficult to determine. Leave tubes V1 and V2 out of their sockets, and observe their plate-terminal voltages. If they are low, but *equal*, there is a short at P_2. Suppose this short is in condenser C_2. The additional current due to the shorted C_2 now flows through R_2, producing an excessive voltage drop across this resistor. Now the "supply"

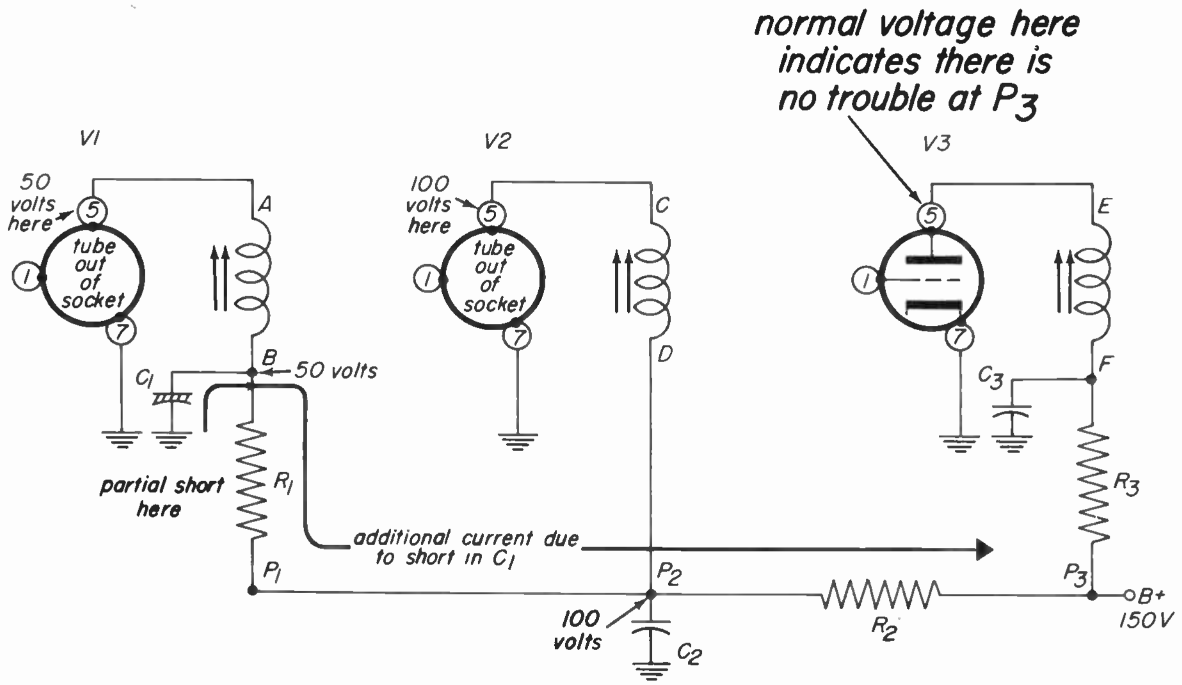

Fig. 31-52

voltage available for V1 and V2 is the actual voltage present at P_2. Since both tubes (V1 and V2) are out of their sockets, they cannot cause any current to flow, and no voltage drops are created. Therefore, the voltage at P_2 appears at the plate terminals of V1 and V2 in *equal* magnitude. If the short is at point B, with V1 and V2 out of their sockets, their plate-terminal voltages will be *unequal*, V1 having a lower voltage than V2. This is illustrated by Fig. 31-52.

If a partial short exists in C_1, current will flow in R_1 and R_2, producing voltage drops across both resistors. At point B there are voltage drops across both R_1 and R_2, so that the voltage at point B will be low (50 volts). However, at point P_2 (also C), the current due to the shorted C_1 produces a drop only across R_2, so the voltage at P_2 (and C) is higher than the voltage at C_1 and is assumed to be 100 volts. Thus, in such cases, the short is always in the circuit where the lowest voltage appears with the tubes removed. In this case the short must be in the plate circuit of V1, and could be a shorted C_1 or a wiring short between A and B. Armed with this knowledge, we can remove the tuner from the main chassis, and find the cause for the short.

Localizing Shorts in a Typical Tuner. .. As a practical example of localizing shorts by application of these principles, consider the typical tuner of Fig. 31-53.

Note that in this front end, there are *two* sources of B plus. One, from plus 250 volts, supplies only the plate of the r-f amplifier. The other, from a voltage divider connecting to plus 120 volts and plus 375 volts, supplies voltage for the screen grid of the r-f amplifier as well as for the plates of the oscillator and mixer. At first it might seem that this would complicate troubleshooting. Actually, the presence of two sources makes it possible to localize troubles more readily, since each supply is independent, and a trouble

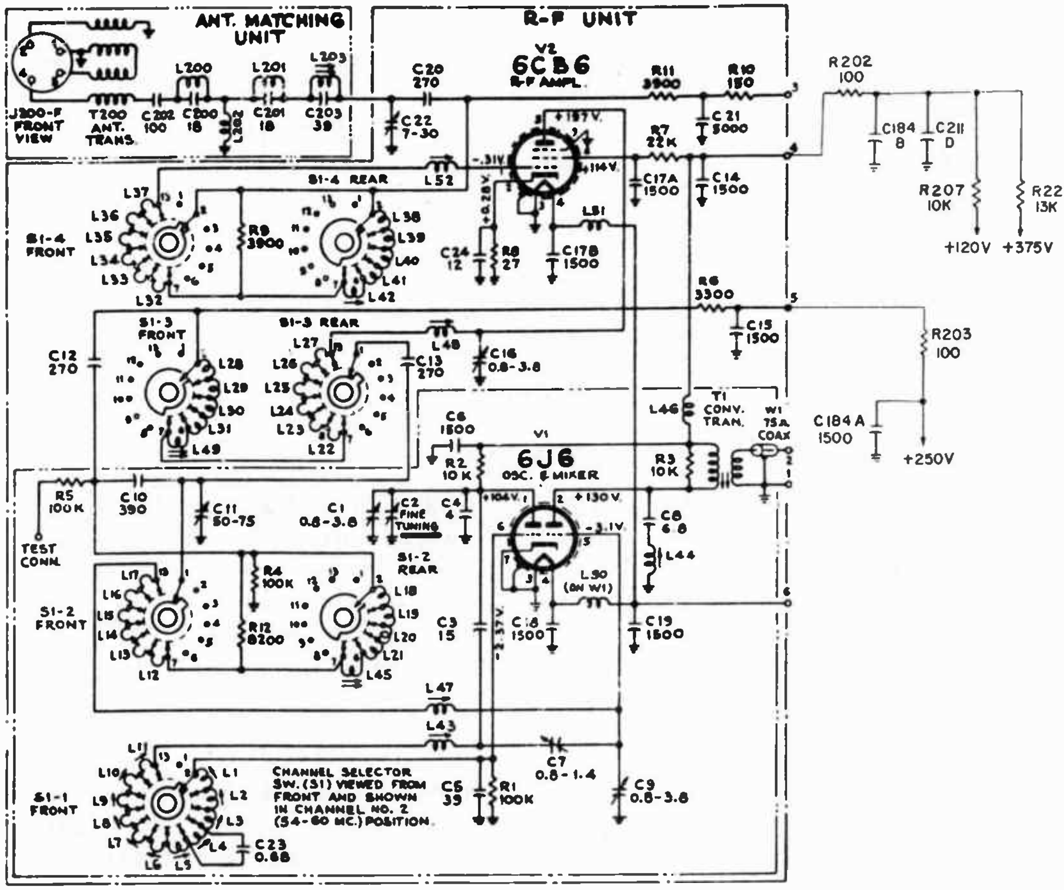

Fig. 31-53

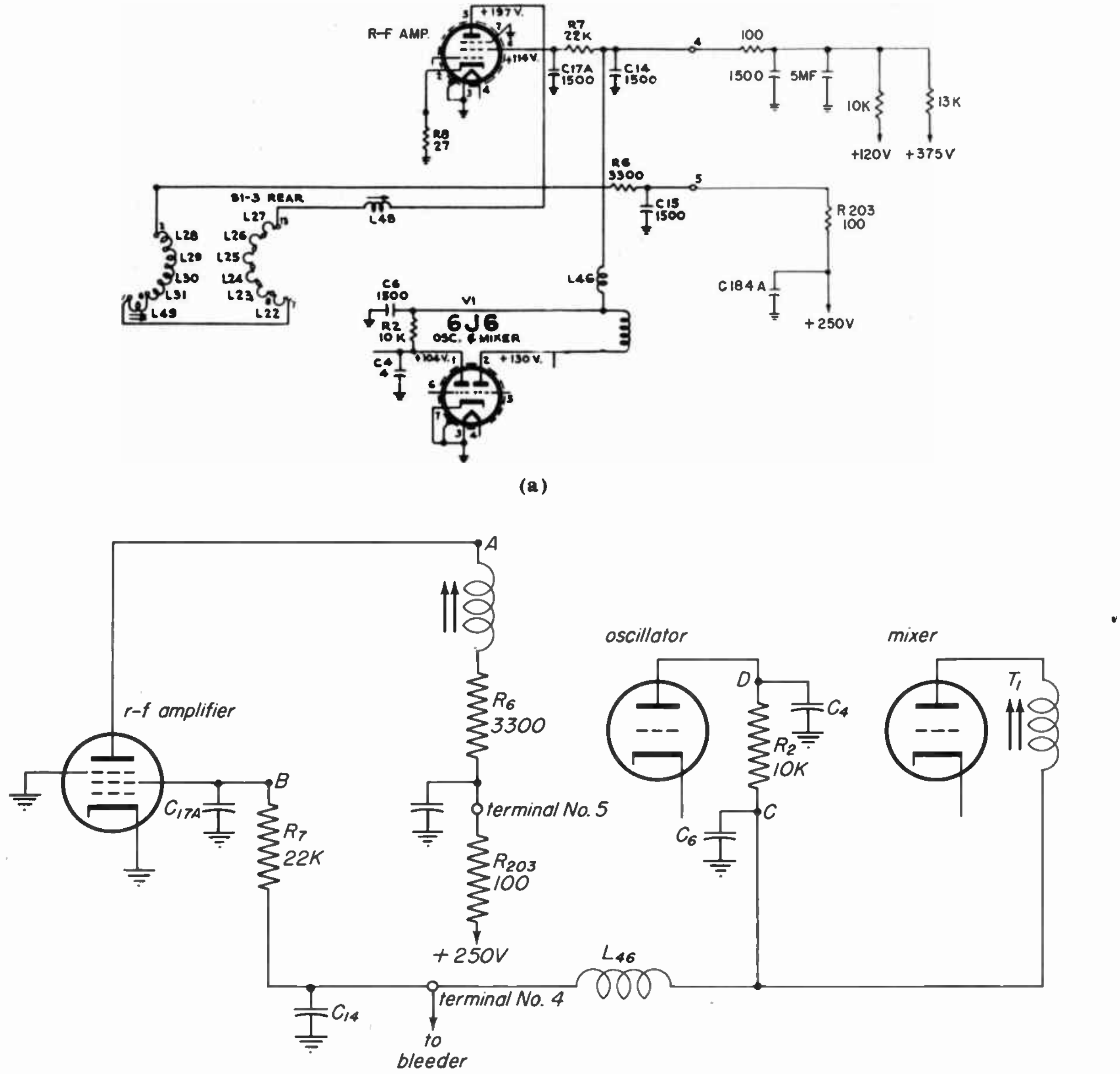

(a)

(b)

Fig. 31-54

affecting one source does not necessarily affect the other. When troubleshooting a tuner in which there are two B-plus sources, we simply treat each source separately, following the same general procedure outlined previously.

In discussing this tuner, two simplified schematics are used. In Fig. 31-54*a*, parts not considered at this time are omitted. Part *b* is a simplified version of *a*, redrawn to emphasize the B-plus circuits.

R-F Amplifier Plate Voltage. -- Assume that with the r-f amplifier tube removed, we measure its plate-terminal voltage and find it to be *low*. First, the B-plus power supply voltage (250 V) should be checked. There are no tube-socket terminals on the tuner where this B plus is available; however, it can be checked on the main chassis. If the source voltage is correct, there must be a short between point A and tuner terminal 5. This can be localized further. With the r-f amplifier tube out, the voltages at terminal 5 and point A are measured. If they are low but *equal*, the short is at terminal 5. If the short is above R_6, the voltage at point A is lower than that at terminal 5, because R_6 and R_{203} form a voltage divider.

R-F Amplifier Screen Voltage. -- If the screen voltage is low when the r-f amplifier, oscillator, and mixer tubes are removed, there are two possibilities to consider. The trouble may be caused by a short in the tuner, or by a short in the bleeder circuits feeding the tuner. To localize between these two possibilities, unsolder the wire from terminal 4. If the B-plus voltage returns to normal, the trouble is in the tuner. If not, the trouble lies with the bleeder supply.

Assume that the trouble lies in the tuner. The short may be at point B, terminal 4, point C, or point D. First, we reduce the number of possibilities. Because the d-c resistance of L_{46} is negligible, we may consider that point C and terminal 4 are at the same potential. To localize the short, we measure the screen voltage of the r-f amplifier, and the plate voltages of the mixer and oscillator. If they are all low but *equal*, the short lies on the distribution line feeding all three stages. It could be in either C_6 or C_{14}. We cannot localize between these two without removing the tuner. If only the *oscillator* plate voltage is low, the short is in C_4, since R_2 isolates the short from the other stages. If only the screen voltage of the r-f amplifier is low, the short is in C_{17A}. Here again, we have an isolating resistor, R_7.

Normal Plate Voltage with Tube Removed. -- In the previous examples, troubles due to shorts in the plate and screen-grid circuits were localized. The symptom in these cases was low plate voltage with the tubes removed. We will now consider low plate voltage with the tube *in*, but normal plate voltage (B plus) with the tube removed. Assuming the tube in the defective stage to be in good condition, low plate voltage is likely to be caused by insufficient bias. This causes excessive current to flow through the plate circuit resistances, resulting in a large d-c drop which subtracts from the plate voltage. Insufficient bias on a stage may be caused by a shorted coupling condenser feeding the grid of that stage. The simplified diagram of Fig. 31-55 illustrates this situation.

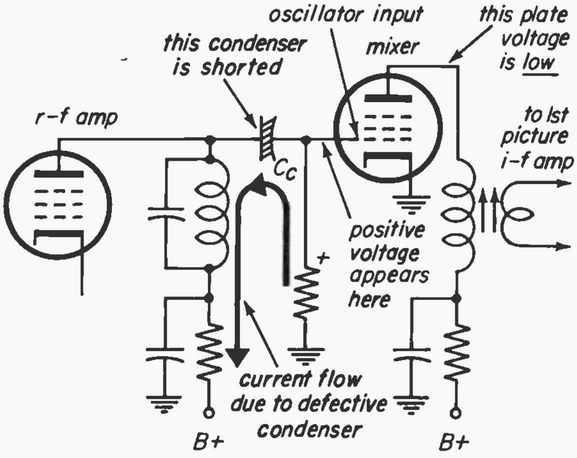

Fig. 31-55

The r-f amplifier stage of a tuner is usually coupled to the grid of the mixer through a coupling condenser; C_c in this case. The normal mixer bias is grid-leak bias developed by rectification of the oscillator signal. This bias is developed in a condenser not shown in the diagram. If a short develops in C_c, as illustrated, a positive voltage may appear on the grid of the mixer. This can overcome the normal mixer bias, causing excessive mixer plate current to flow, which in turn produces low mixer plate voltage. Localizing this defect usually is not difficult. First, pull out the mixer tube, and note that the plate voltage goes up to B plus. This proves that there are no shorts in the plate circuit, and that the trouble is therefore due to excessive plate current. With the tube out of the socket, measure the control-grid bias. If it has some positive value, the coupling condenser is shorted.

Positive Grid in Converter. -- The complete schematic of Fig. 31-56 and the simplified version of Fig. 31-57 illustrate how a shorted coupling condenser can be localized.

As indicated in the complete schematic, the selector switch is in the Channel 2 position. The coupling condenser from the plate of the r-f amplifier to the grid of the converter is C16. However, this condenser is in the circuit only for the low channels (2 through 6). On the high channels (7 through 13), C16 is out of the circuit, and a separate coupling condenser, C15 is switched in. This fact can be of considerable help in troubleshooting. Suppose that we measure a positive grid voltage

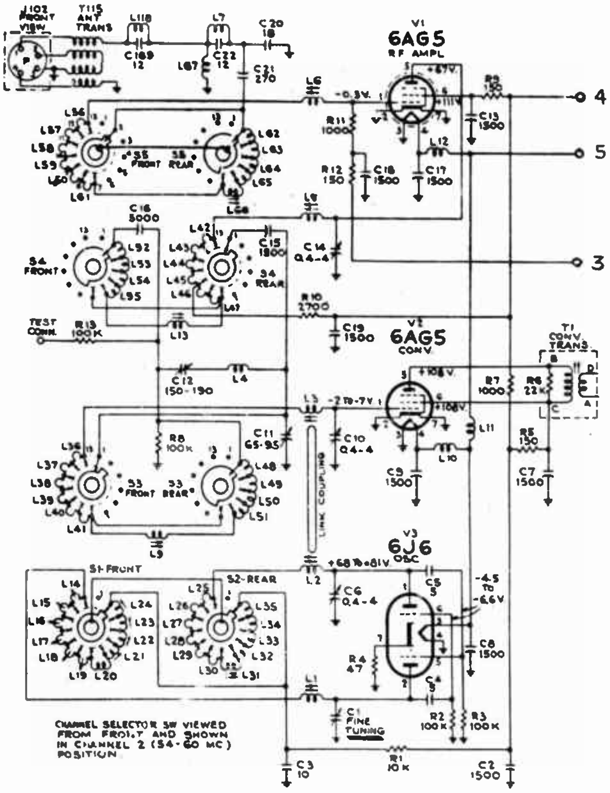

Fig. 31-56

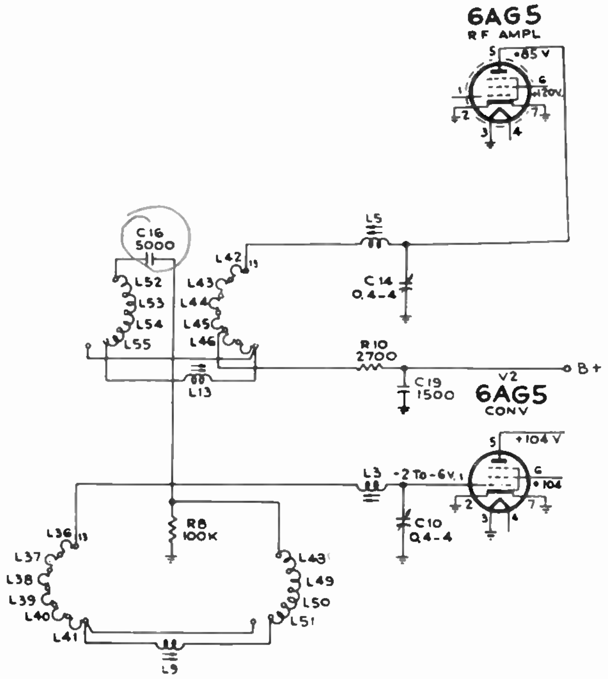

Fig. 31-57

on the mixer when switched to Channel 2, but that when the switch is turned to Channel 7 the positive voltage disappears. This localizes the fault to C16, which must be shorted. The opposite condition, of course, indicates a shorted C15.

Positive Grid in Oscillator. -- In this type of tuner, positive grid voltage due to a shorted coupling condenser can appear in another way. This may happen in a push-pull oscillator circuit, as illustrated here.

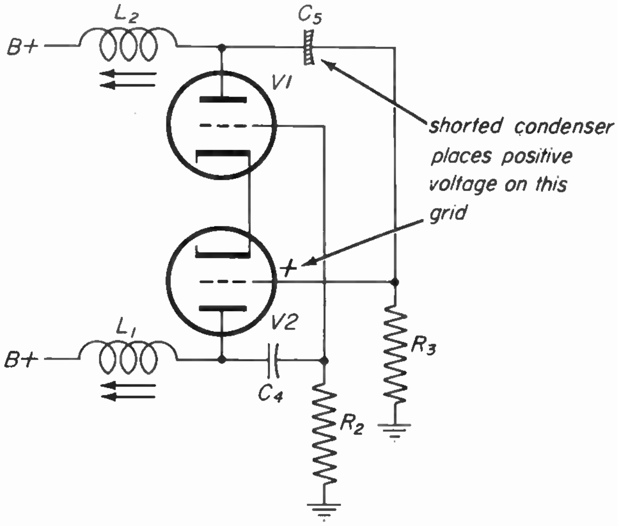

Fig. 31-58

C_4 and C_5 are feedback condensers, which are required to sustain oscillation. If either of these condensers shorts, a positive voltage appears on the grid to which the condenser is connected. For example, as shown in the figure, suppose C_5 should become shorted. The B plus normally applied to the plate of V1 would now be applied through C_5 to the *grid* of V1. The positive grid voltage can be measured through the top of the socket. Localization is not difficult in this case, since C_5 is the blocking condenser connected to B plus and the grid of V1. Similarly, a positive voltage might appear on the grid of V2, which would indicate a shorted C_4.

Zero Plate Voltage. -- Another trouble which may occur in this tuner is that of zero plate voltage on one of the stages. This usually results from an *open* in the plate circuit. Zero plate voltage *could* be due to a dead short. However, this condition would undoubtedly be due to overheating, and the trouble could be localized simply by tracing the smoke. A more common cause for zero plate voltage is an unsoldered or poorly soldered coil in the plate circuit of the tuner. This can be seen with the aid of the partial schematic of Fig. 31-59.

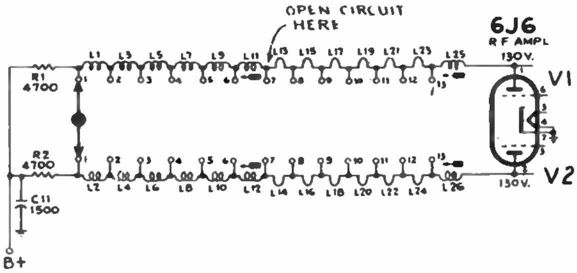

Fig. 31-59

Assume that we measure zero voltage at the plate of V1. In this tuner, the position of the open circuit can be accurately localized by changing the position of the channel switch and observing the results. For example, suppose an open circuit exists at the Channel 7 position, as indicated in the figure. When the channel switch is in positions 1 through 7, no plate voltage appears at V1. However, when the channel switch is in position 8, plate voltage *does* appear at the plate of V1. This voltage appears because the plate voltage on the lower line of coils is transferred to the top line by means of the shorting bar, which is shown at position 1. The position of the open circuit may be localized as follows. Measure the plate voltage of V1 through the top of the socket. Rotate the channel switch until the plate voltage appears. Then turn the channel switch back until the plate voltage disappears. The open circuit is at that point. The plate voltage in this example never disappears from V2; thus the open is localized to the top line of coils, at position 7.

TROUBLES NOT AFFECTING D-C VOLTAGES

31-15. Defects in the input filter to the r-f unit do not affect any d-c potentials and may cause certain definite troubles Usually, the defect is the result of an open filter coil. The open may be caused by mechanical damage, poor soldering or other such possibilities. As an example, the input filter for the KRK-8 tuner is shown here:

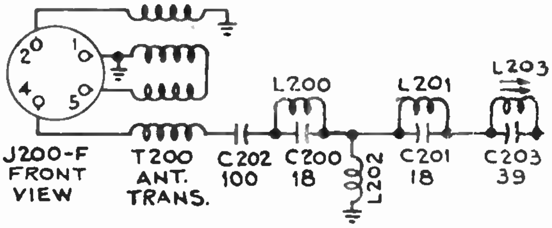

Fig. 31-60

L202, which goes to ground is wound with fine wire and may be easily damaged. The filter has the function of rejecting all frequencies below Channel 2. If this coil opens, the filter will not operate properly. Interfering signals from short wave stations may pass through and produce bars in the picture. Also, short wave stations may be heard in the sound. Fortunately, the coils are easily checked with an ohmmeter, for continuity. Disconnect the antenna when making this check to avoid reading continuity through a folded dipole.

Another example of a trouble not affecting d-c potentials is to be found in tuners employing push-pull oscillators such as the KRK-2 and KRK-5 types. This trouble is the possibility of the shorting bar opening up. We will look into this possibility with the aid of the schematic of the push-pull oscillator of the KRK-2 tuner, shown here:

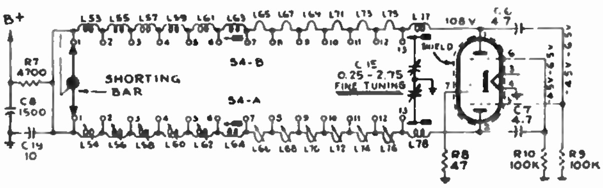

Fig. 31-61

The location of the shorting bar is indicated in the schematic. This shorting bar is soldered between two wafers which hold the tuning elements of the push-pull circuit. If the shorting bar connection is *open*, it will be the same as if the shorting bar is always in the first position, (see Fig. 31-61). That is, the full inductance of each line will be in the circuit. This resonates at Channel 1, in the KRK-2 tuner. Channel 1 is no longer used, so no TV reception would occur. We would see snow but no picture on every switch position. The KRK-5 tuner which uses the same oscillator has no Channel 1 position, but begins on Channel 2. On this tuner, we would always be tuned to Channel 2 regardless of the position of the Channel switch. It is important to remember that this same symptom could be caused by a broken detent fiber shaft. Of course, inspection of the detent mechanism would quickly reveal if it was at fault. The shorting bar does not have to open completely and stay that way. It could be intermittent. In that case the effects caused would also be intermittent. The poor or open connection can frequently be detected by squeezing the two wafers to which the bar connects and observing any indication of a loose connection.

Flicker. – Two types of kinescope indications are generally grouped together by many servicemen under the general heading of "flicker". These two indications are: (1) A pulsing of picture signal strength, and (2) flashing in the picture.

Pulsing of picture signal strength may be due to one of two causes: flapping of the transmission line or motorboating in the receiver. If the transmission line does not have enough standoff insulators and is able to flap in the vicinity of a conducting body, picture pulsing will occur. This commonly happens on the antenna mast. Flapping of the transmission line in the immediate vicinity of the metal mast will cause picture pulsing. The solution is to use additional standoff insulators to prevent flapping.

Motorboating in an amplifier carrying picture information can cause picture pulsing. Motorboating is a very low frequency oscillation which causes corresponding changes in gain and picture strength. One of the causes of motorboating in the picture is defective operation of an AGC system. A more detailed discussion of this will be found in a later lesson on AGC.

Flashing. – Flashing in the picture is generally caused by one of the following: (1) Leaky i-f coupling condenser, (2) intermittent break in the transmission line, or (3) poor electrical connection on the antenna or its reflector, if any. Flashing due to an intermittent leaky i-f coupling condenser is fully covered in the next lesson and need not be considered further here. An intermittent break in the transmission line can also cause flashing. This can be checked fairly easily with an ohmmeter. The exact method of making the tests depends upon whether the antenna is a folded dipole or an ordinary dipole. In the case of a folded dipole, the procedure is as follows: Disconnect the transmission line from the receiver and measure the resistance of the line. It should be a dead short (practically), because the folded dipole is a d-c short across the other end of the line. A steady or intermittent high resistance reading indicates an open line, or poor connections at the antenna. The latter can be checked by visual inspection. In the case of a conventional (open) dipole, it will be necessary to short circuit one end of the transmission line and check its continuity at the other end.

DETENT TROUBLES

31-16. In the switch type of r-f unit we have a mechanical component which is generally referred to as a "detent". This is the device which rotates the switch contacts when changing channels. The detent provides a positive mechanical lock on each channel position. This is generally accomplished by having a heavily spring-loaded ball bearing fall into a groove when the proper channel position is reached. The detent as removed from the KRK-2 type tuner is shown in Fig. 31-62.

Detent Troubles. – One of the troubles encountered in the detent is a broken fiber shaft which normally rotates the

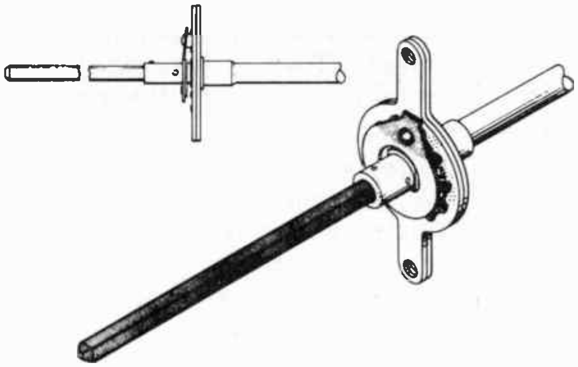

Fig. 31-62

switch contacts. This breakage frequently occurs at the point where the fiber shaft connects to its metal coupling. The pin which holds the fiber shaft to the metal coupling requires that a hole be drilled through the shaft. This weakens the shaft and makes the hole a probable point of breakage. If the fiber shaft should break, the channel switch will still click but it will not be possible to change stations. If the breakage occured at a time when the switch was contacting properly, one station would be received regardless of the position of the channel switch. It is also possible for the shaft to break at a time when the switch is positioned in between contacts. In this case, no reception will be possible in any channel position.

Another detent trouble which sometimes occurs only affects the mechanical lock on each channel. This may be caused by loss of the steel ball or breakage of the spring arm holding the ball. In this case the set will work properly, but it will be very difficult to set the switch on a particular channel. Instead of clicking in on each channel, the switch will rotate too freely.

Replacing The Detent. – If it becomes necessary to replace a detent, great care should be taken to see that the detent goes back in the same way it came out. If this is not done various troubles may occur, some of which are discussed here. The channel switch is made up of several wafers. Each wafer has a number of fixed contacts and a separate center portion which rotates the movable contact. The construction of a typical wafer can be seen here:

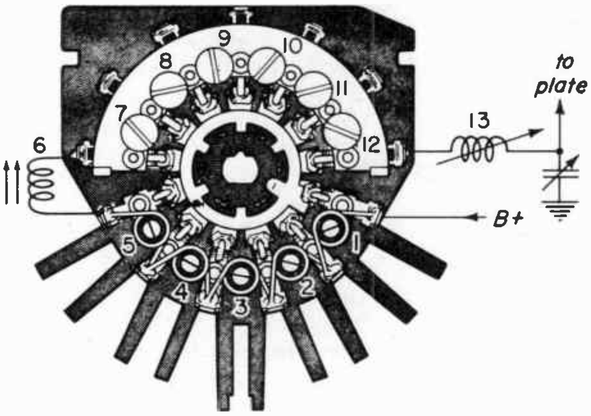

Fig. 31-63

When the detent is pulled out of the r-f unit, the wafer contacts are free to be rotated independently. It sometimes happens that one or more of the wafers may be accidently positioned 180 degrees away from the others. If this incorrect positioning occurs in one or more wafers used in the antenna, r-f or converter stages (but not the oscillator), channels may be received at the correct switch setting. However, the picture will be *weak*. If the *oscillator* wafer is 180 degrees out of position, channels will *not* be received in the correct pointer position and reception will again be weak.

In order to avoid having one or more wafers 180° out of position, note the location of the small *notch* cut out of the rotatable portion of the wafer (Fig. 31-61). If these all point the same way, there can be no 180 degree discrepancies between different wafers. However, it is still possible to insert the entire detent so that it is 180 degrees off with respect to all the wafers. As an example of what might happen in this case, let's take the detent of the KRK-2 type tuner. A front view of the detent is shown in Fig. 31-64.

Note that an "X" is marked at the top of the flat plate. This detent must be installed with the "X" pointing to the *top* of the r-f unit. It is possible to install this detent with the "X" pointing down,

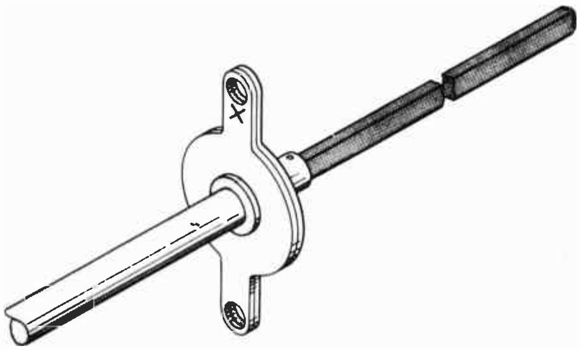

Fig. 31-64

and still have the knob point at the correct channel number. However if this is is done, the moving contact will fall *between* the fixed ones instead of making direct contact. This will cause intermittent reception if the switch contacts happen to touch slightly.

Not all detents have an "X" so conveniently marked and it may be somewhat more difficult to determine the correct position. On such detents you will have to examine the actual switch contacts to determine if the detent is 180 degrees off. Frequently, the pointer will not be directly on the Channel number if the detent is off, but will point *between* two channel numbers. This is another aid in determining the correct position of the detent.

NOTES

NOTES

TELEVISION SERVICING COURSE

PREPARED BY

RCA INSTITUTES, INC.

A SERVICE OF RADIO CORPORATION OF AMERICA

HOME STUDY DEPARTMENT
350 West 4th St., New York 14, N. Y.

LESSON THIRTY ONE (APPENDIX)

ULTRA HIGH FREQUENCIES

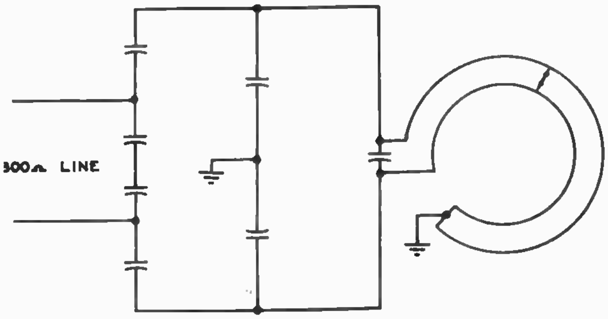

Lesson 31 (APPENDIX)

THE ULTRA HIGH FREQUENCY TELEVISION BAND

31A-1. To allow expansion of television broadcast service throughout the United States, the Federal Communications Commission is opening a new TV broadcast band of 470-890 mc in the UHF 300-3,000 mc range. These are in addition to the TV bands of 54-88 mc and 174-216 mc in the VHF 30-300 mc range. There will also be new allocations of the 12 VHF TV broadcast channels numbered 2 to 13. The added UHF channels are each 6 mc wide, like the VHF channels. Starting with Channel 14 at 470-476 mc, there are 70 additional channels up to Channel 83.

Some areas, particularly small towns and rural areas will be served only by UHF. Some cities may have only VHF channels, while many locations will be allocated a mixture of both VHF and UHF channels.

Although a receiver for use in a given area needs to receive only the channels allocated for that area, it was considered advisable in the manufacture of most VHF receivers to include tuning for all 12 channels. The receivers could then operate without further changes wherever they were installed, if one or more VHF stations were broadcasting. With the addition of the UHF stations there are three possible methods of including in the receiver tuning for the UHF channels. The UHF channel circuits can be included in the receiver as manufactured; an ultra-high-frequency converter for the UHF channels may be manufactured to be attached to the front end of a VHF receiver; or the receiver can be made to allow for addition of UHF tuner strips or the like without the need for an external UHF converter unit.

TABLE A (CHARACTERISTICS OF LINE SECTIONS)

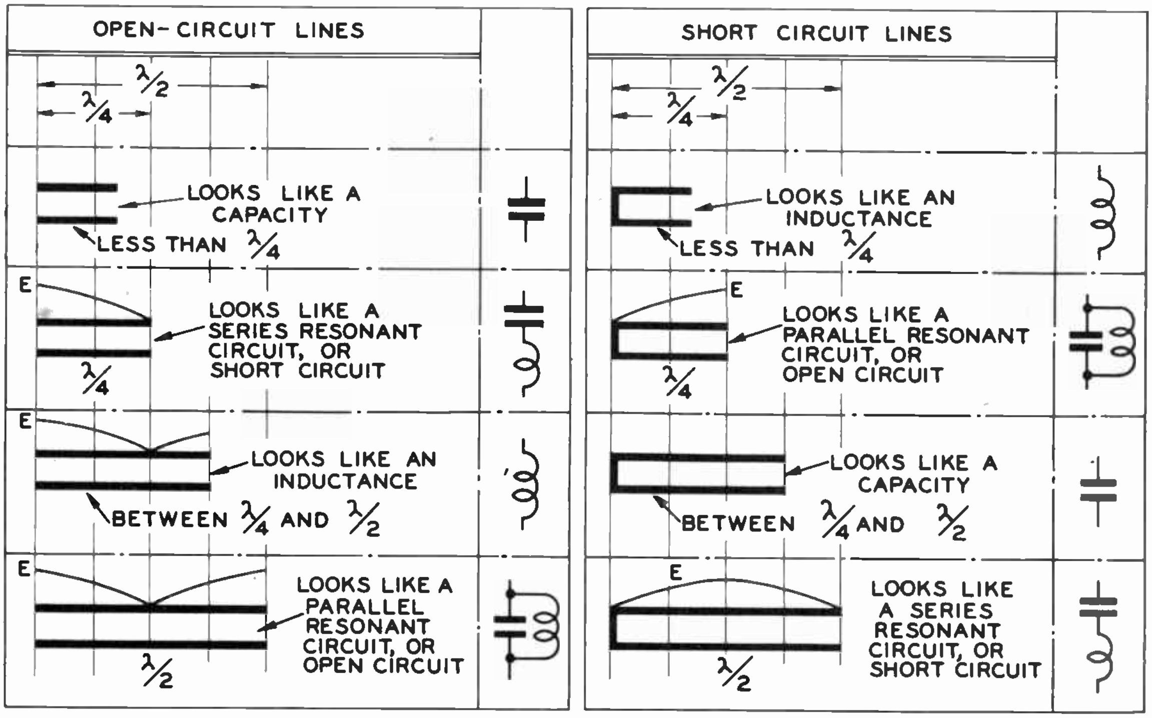

CHARACTERISTICS REPEAT WHEN MULTIPLES OF AN ELECTRICAL HALF WAVE ARE ADDED.

TABLE B (TUNING CHARACTERISTICS OF RESONANT SECTIONS AND CONVENTIONAL CIRCUITS)

WHEN INPUT FREQUENCY IS CONSTANT, AND THE CIRCUIT IS ADJUSTED				WHEN THE CIRCUIT IS CONSTANT, AND THE INPUT FREQUENCY IS ADJUSTED.	
ABOVE RESONANCE (SECTION MADE SHORTER) LOOKS LIKE	BELOW RESONANCE (SECTION MADE LONGER) LOOKS LIKE	CONVENTIONAL CURCUIT	RESONANT SECTION	ABOVE RESONANCE LOOKS LIKE	BELOW RESONANCE LOOKS LIKE
INDUCTANCE $(X_C > X_L)$	CAPACITY $(X_L > X_C)$	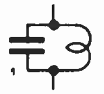 AT RESONANCE THESE CIRCUITS LOOK LIKE A HIGH RESISTIVE IMPEDANCE, OR "OPEN CIRCUIT"	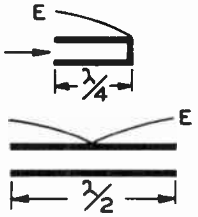	CAPACITY $(X_L > X_C)$	INDUCTANCE $(X_C > X_L)$
CAPACITY $(X_C > X_L)$	INDUCTANCE $(X_L > X_C)$	 AT RESONANCE THESE CIRCUITS LOOK LIKE A LOW RESISTIVE IMPEDANCE, OR "SHORT CIRCUIT"	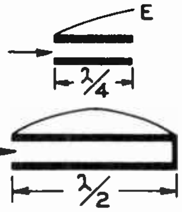	INDUCTANCE $(X_L > X_C)$	CAPACITY $(X_C > X_L)$

TUNED LINE CHARACTERISTICS REPEAT WHEN MULTIPLES OF AN ELECTRICAL HALF WAVE ARE ADDED

SOME ULTRA HIGH FREQUENCY PRINCIPLES

31A-2. As frequency increases, the conventional tuning elements of inductance and capacitance become physically smaller and less efficient. For the highest frequency channel in the VHF band (channel 13, 212 to 216 mc.), two turns of wire with brass core and the associated distributed capacitance are sufficient to constitute the required resonant circuit. When we go up to the higher UHF channels, above 500 mc. specially designed tuning elements become necessary. A great many physical arrangements are possible.

To better understand the physical arrangement of ultra high frequency tuning elements likely to be encountered in the field, it is well to look at the characteristics of quarter-wave and half-wave sections of transmission line. These are summed up in Tables A and B.

Tuned-line sections may be made in coaxial form or in the form of a two-wire open line. They may be made from metal tubes, rods, or foil, and are generally silver-plated to reduce radio frequency losses. Examples of such construction are shown in Fig. 31A-1.

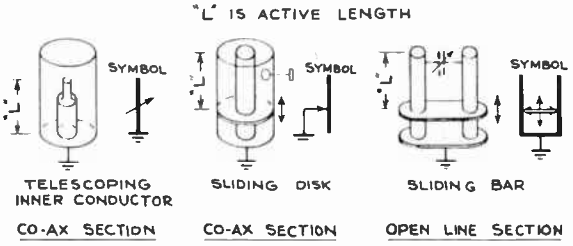

Fig. 31A-1

To keep the elements short, the sections may be cut to lengths less than a quarter-wave being then tuned to resonance with a capacitor. This is really the same sort of thing as resonating a capacitor and the inductance of its leads.

ESSENTIALS OF AN ULTRA HIGH FREQUENCY CONVERTER

31A-3. ***Block Diagram.*** – The ultra high frequency converter is a device connected at the input of an ordinary television receiver to make possible the reception of the UHF channels. It may be a

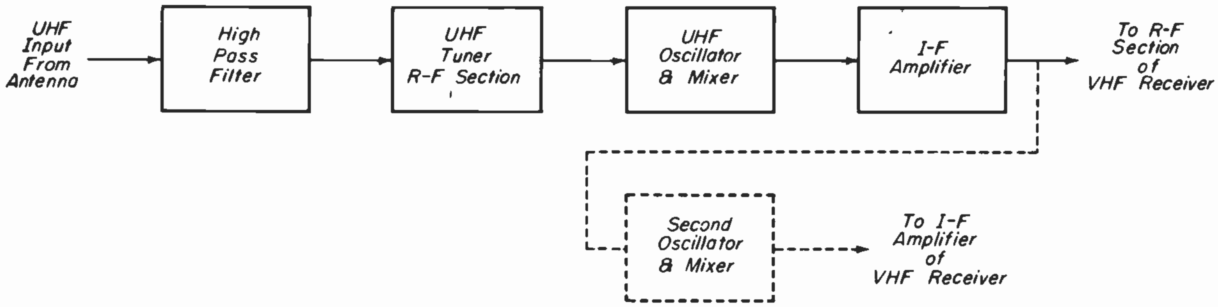

Fig. 31A-2

separate device connected to the antenna terminals; or it may be an internally mounted, fixed-tuned device. In order to utilize as much as possible of the VHF receiver to which the UHF converter is added, the superheterodyne principle is used to convert the UHF signals to a lower frequency, which can then be applied to the appropriate circuit of the original receiver. This arrangement is known as a double superheterodyne circuit.

The essential sections of a UHF converter are shown in Fig. 31A-2. These are: a high-pass filter to reject signals below 470 mc; a UHF tuning section to select the desired channel; an oscillator and mixer to convert the UHF signal to a lower frequency; and an i-f amplifier to provide the desired gain. Some manufacturers apply this output to an appropriate channel of the VHF receiver to utilize its r-f section as additional i-f amplification in a double superheterodyne circuit; the converter output frequency is selected to agree with a VHF channel otherwise unused in the given locality. Others add a second oscillator and mixer to the converter circuit and couple the output to the i-f section of the VHF receiver, cutting out VHF r-f and oscillator-mixer stage completely.

In addition to selecting the desired channel, the UHF converter must provide gain of the signal while introducing as little noise as possible in the converter circuits. Special tubes and circuits have been developed to provide improved signal-to-noise ratio at the ultra high frequencies.

High-Pass Filter. – In the VHF receiver there are filter and trap circuits in the input to the r-f section to prevent unwanted signals from passing to the amplifier circuits and causing interference. This requirement assumes even greater importance in UHF converters. It is also necessary to prevent the local oscillator in the converter from radiating its signal, thereby causing interference to other nearby receivers. While a band pass filter could be made that will accept only the UHF channels, 470 to 890 mc, cutting off sharply both below and above that range, it is usually simpler and just as effective to provide merely a high-pass filter that rejects frequencies below 470 mc. Frequencies above the UHF TV range are not likely to be a source of interference.

Input filter circuits to the r-f section of the converter are found in many physical forms. The new technique of printed circuits is particularly effective for this application.

UHF Tuning Elements. – Tuning elements for UHF are made in forms which appear quite odd to those who are accustomed to VHF circuits. One manufacturer uses specially designed variable inductances. Another uses a metal foil mounted on a bakelite tubing, with a movable slug inside. Others use printed circuits with shaped inductors. Tuning may be effected by varying the circuit inductance or the capacitance. Tracking of r-f and oscillator tuning elements is determined by the shape of the inductor elements, or is adjusted by padding with suitable inductances or capacitances.

To illustrate the wide variation in types of tuning elements the products of several manufacturers are shown. These are the Mallory UHF "Inductuner" Fig. 31A-3, the Zenith UHF coil and assembly for a single UHF channel strip (Fig. 31A-4) and an experimental RCA copper foil element (Fig. 31A-5).

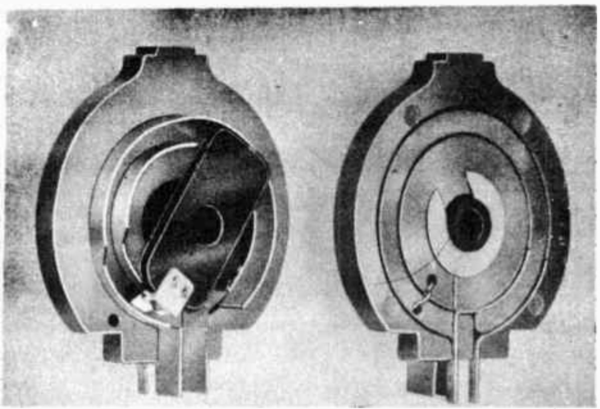
(P. R. Mallory Co.)

Fig. 31A-3

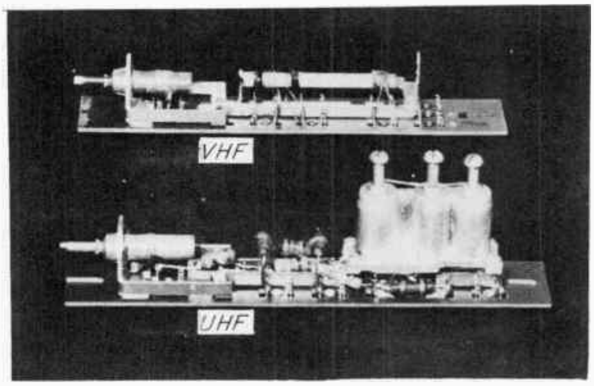

(Zenith Radio Corporation)

Fig. 31A-4

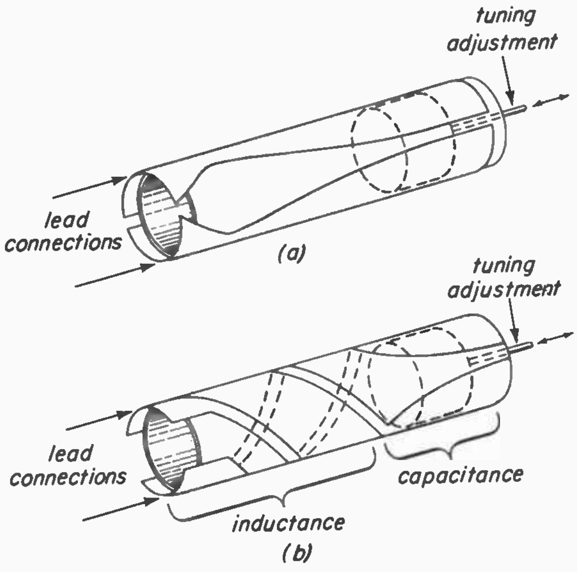

Fig. 31A-5

These will be explained later in the discussion of specific UHF converters.

UHF CONVERTER CIRCUITS

31A-4. The specific input filter, r-f and oscillator circuits of a UHF converter depend upon the particular design of input and tuning elements of the manufacturer. In general, the overall circuit is a double superheterodyne. Some manufacturers utilize high frequency tubes as the mixer detector. Others use a crystal diode, which is more efficient at the ultra high frequencies. For the i-f amplifier, however, there is general agreement in the use of the cascode circuit for reasonable gain with a good noise factor. The r-f and oscillator circuits will be described in the discussion of specific UHF converters. The cascode circuit will be explained at this time, since it is common to most converter circuits.

Cascode Circuit. – The signal applied to the i-f section of a UHF converter is likely to be much smaller than that available at the i-f input of a VHF receiver. This results from the fact that for equal power output at the transmitter, there is a greater propagation loss at the ultra high frequencies. Also there is some signal loss in the input and tuning sections of the UHF converter. The net result is a lower signal-to-noise ratio at the input to the i-f amplifier. This makes it necessary to keep the noise generated in the i-f amplifier to as low a level as possible, if a usable signal is to be passed on to the remaining receiver circuits.

While a pentode amplifier can operate with relatively high gain and has other distinct advantages, its noise level is high. In addition to the "shot-effect" noise, (the impact of electrons striking the plate) which is common to all tubes, pentodes have "partition" or "interception" noise resulting from variations in the division of the tube current between the screen grid and the plate. The noise of a tube connected as a pentode is from 3 to 5 times as high as the same tube connected as a triode. Obviously, it is desirable to use a triode. But, since the amplification capabilities of a triode are so much less than that of the pentode, two stages of triode amplification become necessary.

Even with two stages of triode amplification it is still necessary to provide maximum amplification with a good noise factor (high signal-to-noise). The best noise characteristics can be obtained with the use of a grounded grid triode circuit. However, this circuit has the disadvantage of low gain and low input impedance. The low input impedance is a particular drawback since a high input impedance is required at the first stage to give maximum gain for a wide range of input signal strength. The solution has been found in the use of a grounded-cathode amplifier, which has a high input impedance, followed by a grounded-grid amplifier, which has a good noise factor. The combination is designated a "cascode" amplifier. Special twin triode tubes with particularly good noise factor have been developed for use in the cascode circuit.

The basic cascode circuit may be either direct coupled or a-c coupled from the plate of the first to the cathode of the second stage, as shown in Fig. 31A-6 (a and b).

Modifications and additions to these basic circuits are made for the purpose of neutralization to improve the stability of the circuit.

SPECIFIC UHF CONVERTERS

31A-5. Mallory UHF Converter. – The circuit for the Mallory UHF converter is shown in Fig. 31A-7. The converter utilizes a 3-section Mallory UHF "Inductuner" which provides continuous tuning for complete coverage of channels 14 to 83. Only four alignment adjustments are needed for entire coverage of the UHF band. By having the oscillator operate at a lower frequency than the carrier there

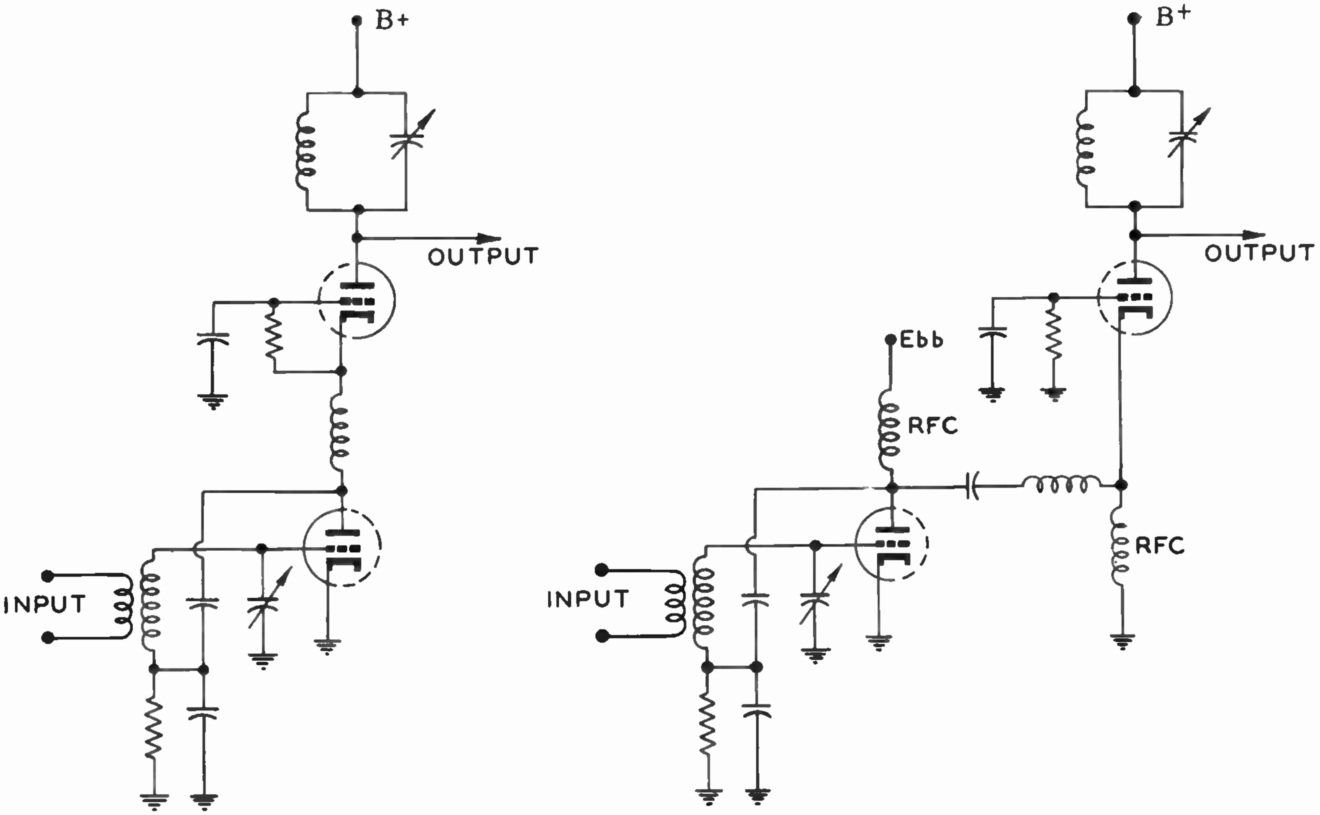

(a) Direct-Coupled

(b) A-C Coupled

Fig. 31A-6

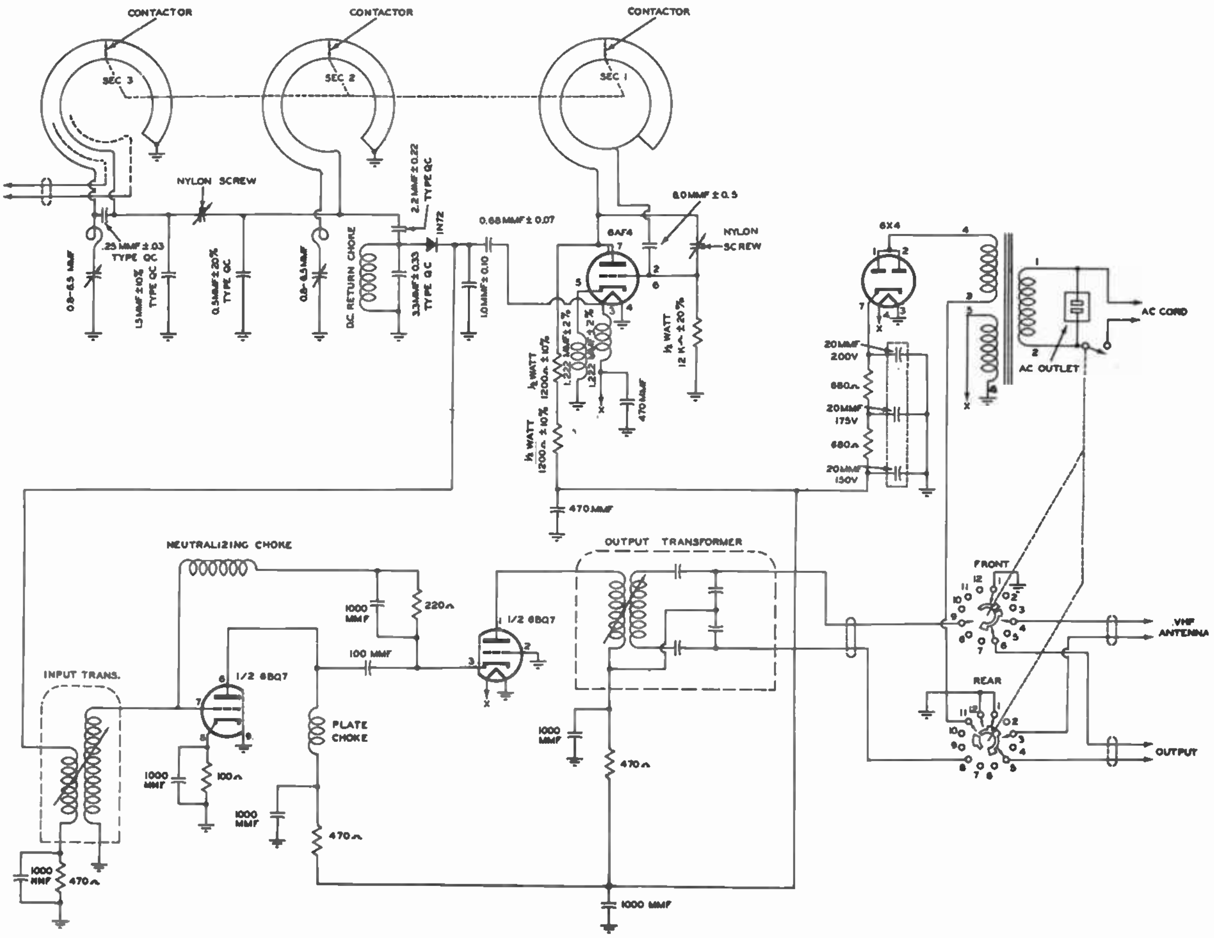

Fig. 31A-7

is no inversion of the video and audio carriers, so that the output of the converter can be fed into the input terminals of a suitable channel of a conventional VHF receiver. The oscillator tuning-section covers a range of 378 to 828 mc; when tracking with the r-f tuning section, the converter output falls within the 76-88 mc band. By adjustment of the tuning knob, the six megacycle channel width may be put at either 76-82 mc or 82-88 mc, corresponding to channel 5 or 6 of the regular receiver. The channel selected is one which is not allocated for reception in an area where the receiver is installed. By making the UHF input and the i-f amplifier accept a 12 mc band width, no local preadjustments are necessary.

UHF Preselector Tuning Section. – The Mallory UHF Inductuner element, shown in Fig. 31A-3, consists of dual edge-mounted strips arranged in a concentric path. A shorting element, rotating within 270°, provides the required inductance range by varying the effective length of the loop (up one strip and back the other). The strips are rigidly held in a mica-filled phenolic base to provide mechanical strength and correct electrical properties. A three-section tuner is shown in Fig. 31A-8. The antenna-tuning section

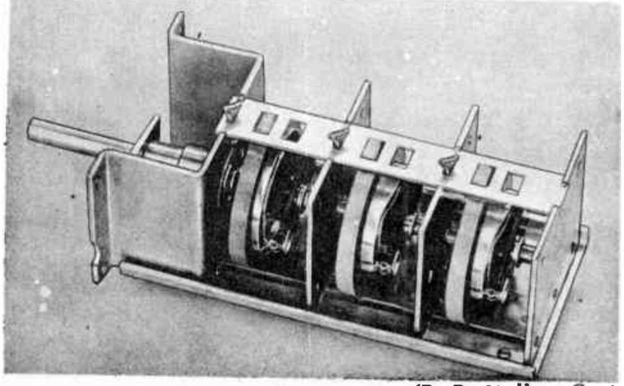

(P. R. Mallory Co.)

Fig. 31A-8

is at the rear of the assembly, the mixer-tuning section is in the center, and the oscillator-tuning section is at the front. The antenna and mixer-tuning sections constitute the first and second preselector tuning-section elements. These are tapered differently with respect to each other and to the oscillator section, in order to allow for tracking differences introduced by the antenna and mixer coupling.

The two tuning elements in the preselector, ahead of the mixer, provide double-tuned selectivity and the required impedance match to the mixer. The equivalent circuit for the preselector-tuning elements is shown in Fig. 31A-9.

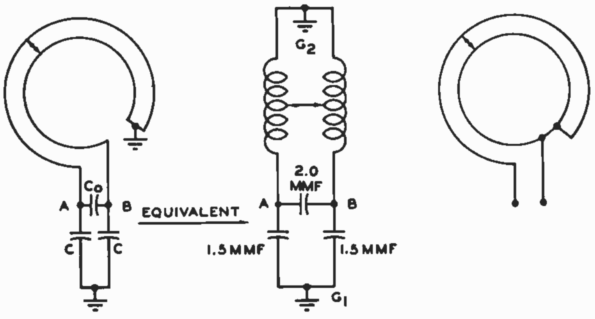

Fig. 31A-9

A major source of trouble at the ultra high frequencies are the losses, due to resonance at particular frequencies, resulting from the small physical dimensions of a circuit loop which will resonant in the UHF band. By operating the inductor elements in a balanced arrangement, as shown in Fig. 31A-9(a) this trouble is minimized.

With the Inductuner element operating as a preselector, the center point (labelled G_2 in the figure) should be grounded to the the chassis. This short-circuits to ground any low-frequency interference which may be present, and also reduces oscillator radiation. With the inductor element operating in an oscillator circuit, the inner concentric conductor is connected back on itself, as shown in Fig. 31A-9 (b). This is done to prevent an undesirable resonance which will reduce oscillator output at frequencies above 760 mc in some types of oscillator circuits.

At these ultra high frequencies, the choice of grounds, the placement of components, and stray coupling to resonant lines must be carefully watched for undesirable resonant effects.

Mixer and Oscillator Sections. – In a VHF receiver a major source of internal noise is that generated in the mixer tube. Since reduction of noise is so essential in the UHF converter, some other type of mixer is desirable. A crystal mixer, type 1N72, is used. Its noise factor is considerably better than that of a tube.

As described earlier, the oscillator tuning-section covers a range from 378 to 828 mc to give an intermediate frequency falling into either band 5 or band 6.

Interelectrode tube capacitances form a part of the oscillator circuit, as indicated in the equivalent circuit (Fig. 31A-10.) The arrangement is such that the reaction of the cathode and heater circuits on the oscillator tank circuit is minimized. This permits the heater-cathode capacitance of the tube (C_{HK} is apapproximately 217 uuf) to be used to couple the oscillator signal from the cathode to the mixer circuit. The effect is that the preselector circuits coupled to the mixer have minimum reaction on the oscillator, and oscillator radiation by way of the antenna is kept to a mimimum.

To obtain the required oscillator characteristics and stability, it is necessary to use care in the layout of components and in the selection of ground and anchor points for components. In production, ground lances (solder-tabs cut and bent from surface of chassis) are provided, and connecting leads are stamped from rigid metal to eliminate the chance for error in placement of components. Oscillator drift is minimized by proper location of the parts and by isolating them from the heating effect of i-f and power supply tubes. Because of the stability of the oscillator, the converter can be used with excellent results with television receivers employing the inter-carrier audio system.

The I-F Amplifier. – The i-f amplifier in the converter (Fig. 31A-7) uses a cas-

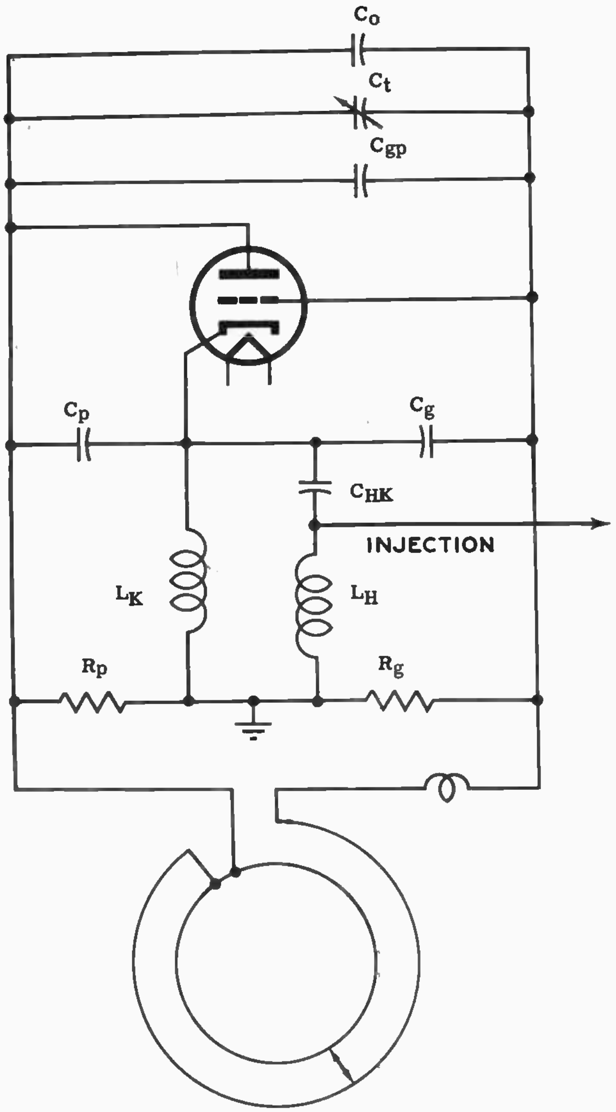

Fig. 31A-10

code circuit, with the signal a-c coupled from the plate of the first stage to the cathode of the second. The circuit is neutralized in order to maintain stability and a good noise factor. The low-noise twin triode 6BQ7 is used, having been especially designed for the purpose. The circuit is designed to operate at 82 mc with a bandwidth of approximately 12 mc. This center frequency and bandwidth is determined by the adjustment of the double-tuned input and output transformers.

The i-f amplifier must make up for the losses in the antenna input, preselector, and mixer stages. In these circuits the gain is less than unity – 0.6 ahead of the mixer and 0.25 at the mixer. The gain of the i-f amplifier is approximately 6, from the input to the output terminals. The overall gain for the converter is 0.6 x 0.25 x 6 = 0.9 or approximately 1.0. Further output amplifier gain will be of no help, since the signal-to-noise ratio will not be improved thereby.

Power Supply. – The power supply is a conventional transformer-rectifier-filter circuit to provide the required B plus and filament voltages. It utilizes a 6X4 tube connected as a half-wave rectifier. It is mounted on the converter chassis, well removed from the critical oscillator and tuning circuits.

The Zenith VHF System. – Zenith receivers using turret tuning have replaceable strips, fixed-tuned for desired channels, which have all the necessary circuits built into them. As far as the user is concerned, he simply turns the station selector to the desired UHF station as he would for *VHF*. From the serviceman's viewpoint, the strip is installed as for a VHF station (Fig. 31A-11) and, if the receiver is not in a strong VHF signal neighborhood, some provision must be made for a special antenna. Zenith has developed an antenna coupling network which permits an antenna for each band to remain permanently connected to the receiver antenna lead, without interaction.

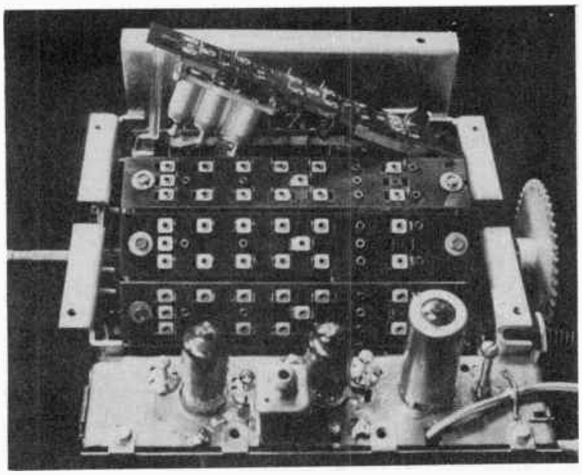

(Zenith Radio Corporation)

Fig. 31A-11

The UHF strip is shown at the bottom of the photograph, (Fig. 31A-12) compared with the VHF strip directly above it. The UHF circuits are all contained in the three-barrelled casting. An exploded view is shown in Fig. 31A-13, in which the three UHF coils – antenna, mixer, and multiplier – are plainly seen. The screws at the top of the casting are the tuning adjustments, varying the capacitance of the coil circuit.

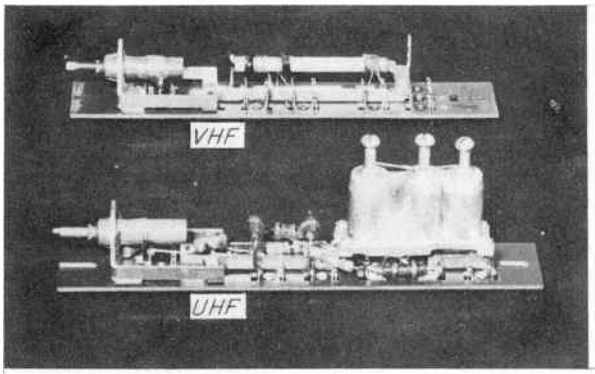

(Zenith Radio Corporation)

Fig. 31A-12

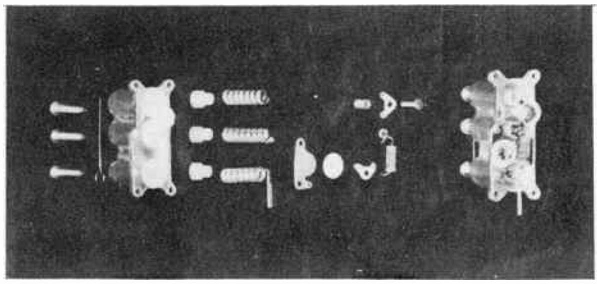

(Zenith Radio Corporation)

Fig. 31A-13

The operation of the circuit is indicated in the block diagram, Fig. 31A-14. The oscillator output is passed through a diode crystal to generate harmonics, and the proper frequency is selected by one of the VHF coils. The incoming signal, tuned by another of the coils is fed, together with the local oscillator harmonic frequency, to a tuned mixer circuit which includes a crystal.

The crystal in the mixer circuit performs the function of a mixer tube. In order to "mix" two frequencies – that is, combine them so as to be able to extract the sum or difference frequencies (heterodyne principle) – it is necessary that they pass through a non-linear circuit. The nature of the non-linear circuit is unimportant, and a vacuum tube is usually used for this purpose, to isolate the two input circuits from each other and to take advantage of amplification. However, a crystal is a non-linear device since the current is not proportional to the voltage over the operating range (which includes positive and negative voltages; if only one polarity were used, as by d-c biasing, the crystal would be a linear device – and would be without effect in the circuit!). For this reason, the crystal will operate as a mixer quite satisfactorily.

By proper selection of the oscillator harmonic, the frequency at the output of the mixer is made to be in the VHF band, and the signal is then fed to the regular r-f input tube of the receiver, where it continues just as though it were a VHF signal in the first place instead of a con-

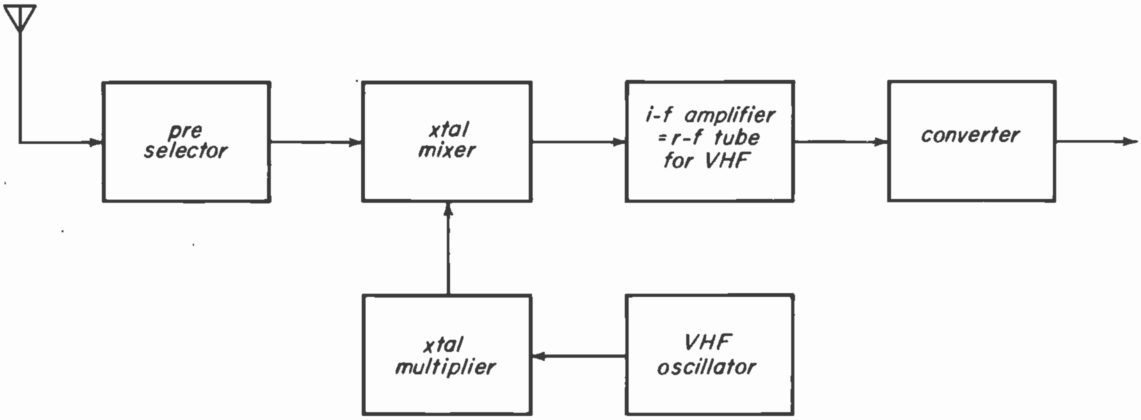

Fig. 31A-14

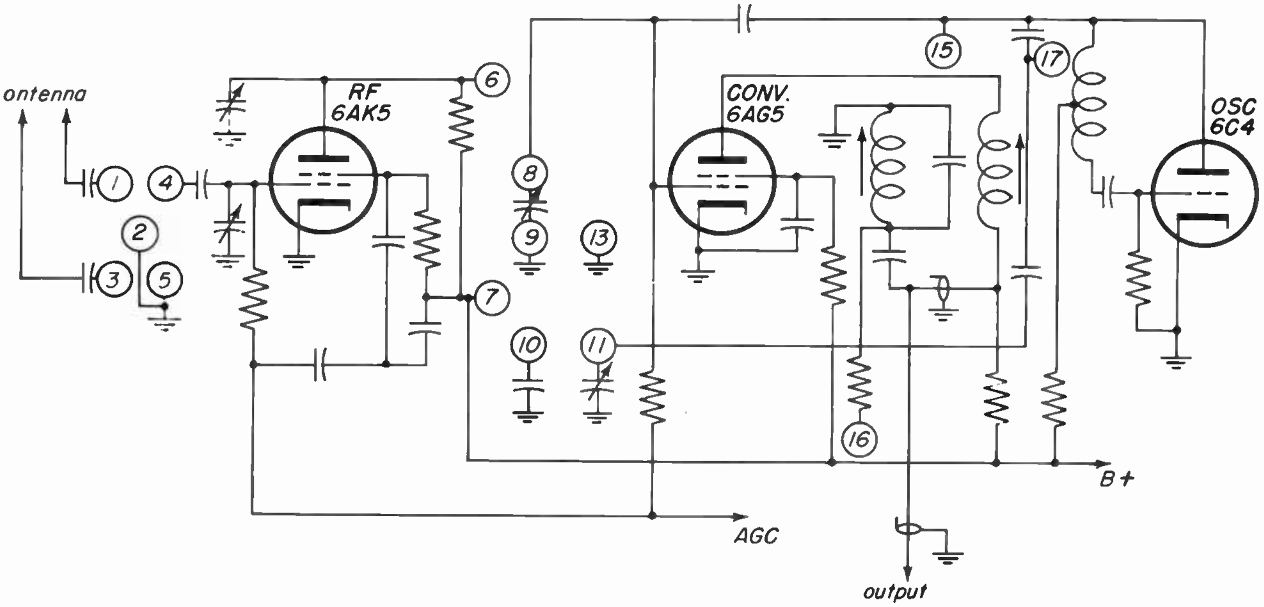

"Shelf" Circuits – fixed portion of turret tuner
(Note that not all numbered terminals are for use with UHF strip)
(a)

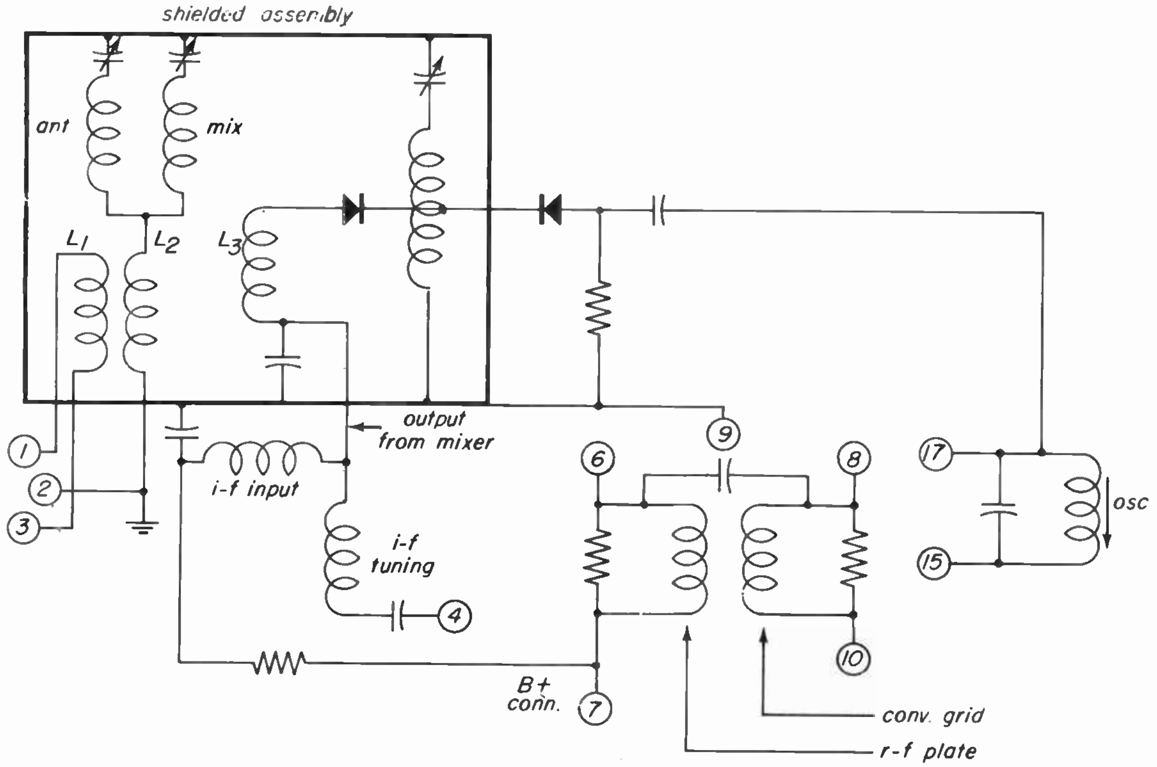

UHF Tuning Strip – changeable portion of turret tuner
(b)

Fig. 31A-15

verted UHF signal.

It should be noted that the local oscillator frequency affects both the first intermediate frequency – that is, the output from the strip, – and the second i-f, which is the normal receiver i-f. Since the strip comes pre-tuned, this should not be a problem for the installation. For servicing, specific service instructions should be consulted.

The schematic diagram is given in Fig. 31A-15. It is shown in two parts – the "shelf", or fixed chassis circuits, and the "strip" or changeable circuits. Note that numerous excess contacts are found on the shelf circuits (contacts are represented by numbered circles, for matching purposes). Some of these are used only with the VHF strips.

The RCA Experimental Tuner. This UHF tuner does not represent finished commercial design but is an experimental model produced for obtaining reception data in UHF broadcast tests. Fig. 31A-5 illustrated the physical appearance of the tuning element for the UHF channels, while the schematic diagram of the complete tuner is shown in Fig. 31A-16. For experimental purposes the tuner was made to be connected either to the antenna posts of a conventional receiver tuned to Channel 12 or 13, or coupled directly to the receiver's 21-27 mc i-f amplifier.

The tuner uses three special variable units, consisting of copper foils attached to a bakelite tube, in which a plunger moves. The input and interstage units are shown in (a) of Fig. 31A-5. These two are similar, varying slightly as to foil contour. The oscillator unit (b) differs in having more inductance, since it operates at a lower frequency.

The plunger acts as a capacitive shunt across the desired point along the strips. A core movement of 1 3/8 inches is sufficient to tune over a 500 to 700 mc range, to give a 135 mc first intermediate frequency. Further design work is necessary to make the tuner effective over the entire UHF band.

The tuner circuit includes a high-pass input filter cutting off at 500 mc, r-f amplifier stage, mixer-oscillator, i-f amplifier at 132-138 mc, and a fixed-tuned mixer-oscillator. This converts the 132-138 mc i-f either to the 21-27 mc i-f of the receiver or the r-f frequencies for the VHF Channels 12 or 13. The i-f of 132-138 mc is high enough to provide satisfactory image rejection with only two tuned circuits in the UHF r-f stage, but is also low enough to allow reasonable gain with conventional tubes. Automatic gain control is not used because the response curve varies with changes in tube transconductance.

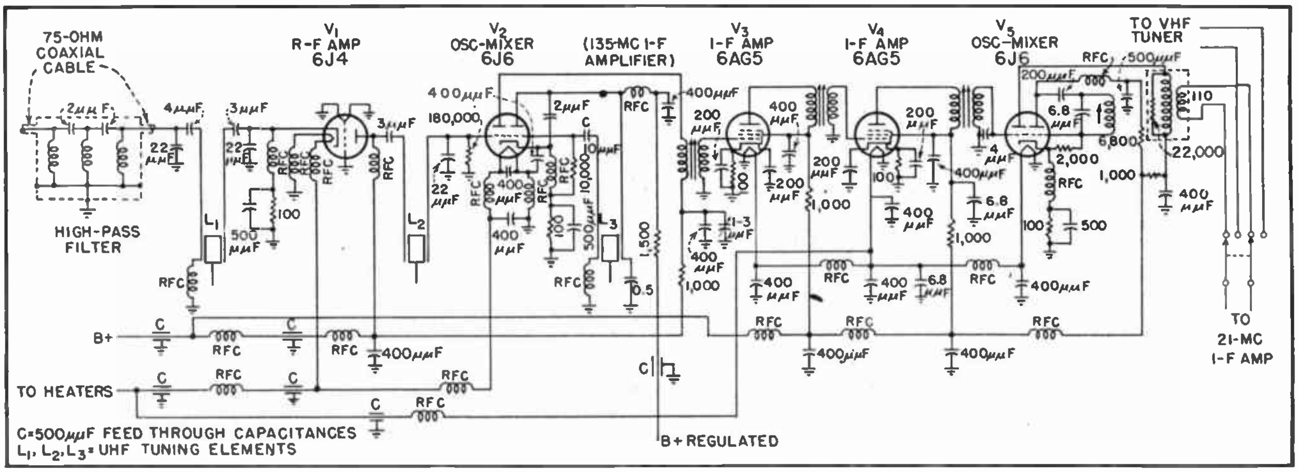

Fig. 31A-16

UHF ANTENNAS

31A-6. For VHF television reception in the band from 54 to 216 mc, a simple dipole antenna may be adequate for a strong signal area, while special types are needed for weak signal areas or where multiple reflections are encountered. In general, the same type of conditions are present in the reception of the UHF band from 470 to 890 mc.

When a UHF converter is added to a VHF television installation there are a number of possible ways to pick up signals in the UHF band.

1. The existing VHF antenna and transmission line may be used in strong signal areas. This may require reorientation of the antenna.
2. A built-in or cabinet type antenna may be used in strong signal areas.
3. A separate UHF antenna may be installed on the mast used for VHF reception. By using a special coupling network both VHF and UHF antennas could feed into the same transmission line.
4. The VHF mast may have to be moved to a new location for satisfactory pick up of both VHF and UHF signals.
5. It may be necessary to make an entirely new installation for UHF.

The Use of VHF Antennas at UHF. – In medium and high signal strength areas where reflections are not a problem, it is possible to use existing VHF antennas. In general, at the ultra high frequencies the gain of these antennas is lower than for VHF signals and the directivity is poor. The entire UHF band, however, can be picked up. The horizontal field pattern for VHF antennas at UHF show many lobes, with the direction of the major lobe shifting considerably for different frequencies within the band. This may require separate orientation of the antenna for stations operating on widely different channels.

The V-type of VHF antennas give reasonably good results at UHF. The horizontal field pattern for a double-V (one behind the other) is shown in Fig. 31A-17.

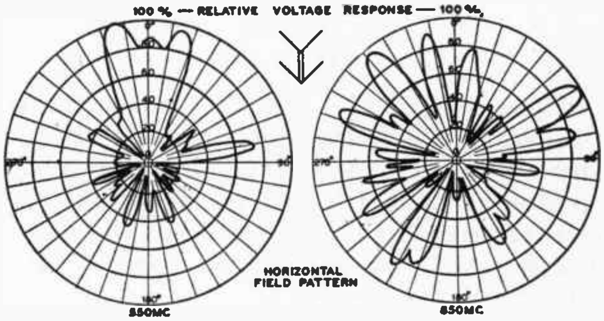

Fig. 31A-17

By stacking two V-type antennas one above the other, good UHF reception results. The same rods as those used for a standard dipole for channel 2 can be used. Such an antenna is easily installed on an existing mast. It has a relatively high gain, at UHF, in medium and weak signal areas, with the added advantage that this gain increases with the frequency, offsetting the propagation and transmission losses which likewise increase as the frequency increases. The directivity pattern is good and the entire UHF bandwidth is covered.

UHF Receiving Antennas: Antennas particularly designed for UHF reception are often basically different in physical appearance from the usual types of VHF antennas, a consequence of the much higher frequencies and the much greater bandwidth involved.

The simplest UHF antenna is the fan dipole, shown in Fig. 31A-18. This an-

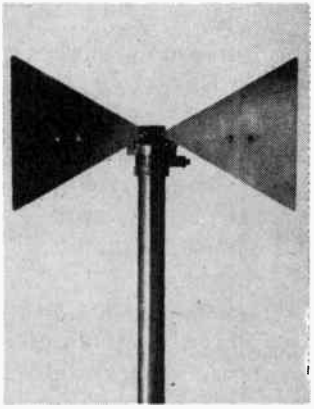

Fig. 31A-18

tenna is make up of two triangles of metal insulated from each other. The bandwidth of this fan dipole is excellent, and the gain and directivity is reasonably good.

Better results may be obtained by stacking several fan dipoles vertically as shown in Fig. 31A-19. This results in greater gain for fringe area reception, but due to some frequency selectivity in the transmission lines used for phasing the dipoles the bandwidth is not quite as uniform as is the case for a single fan dipole. The horizontal directivity is not affected but there is a sharper vertical directivity. This sharper vertical directivity may be useful in eliminating or reducing earth reflections or overhead reflections such as the flutter signal reflected from airplanes.

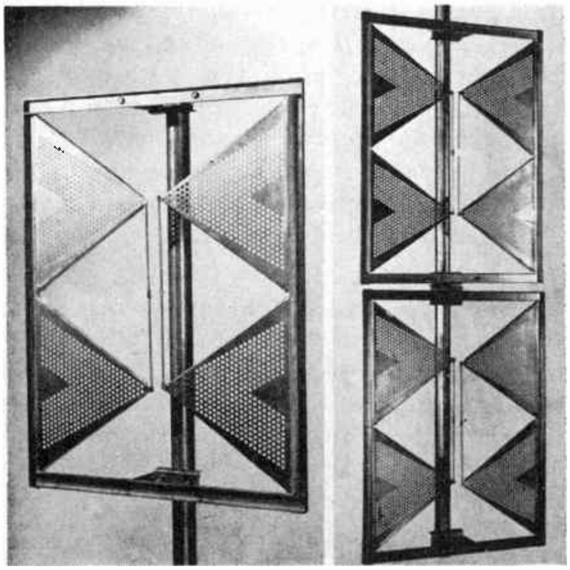

Fig. 31A-19

Rhombic antennas, such as that shown in Fig. 31A-20 are particularly effective at UHF. This type of antenna shows high gain, good directivity and good band width. It has the desirable characteristic of increasing gain toward the high frequency end of the band.

Experience with radar microwaves has led to the development of many other types of antenna that could be used for special applications or for greater gain or directivity. Examples of such antennas are illustrated in Fig. 31A-22.

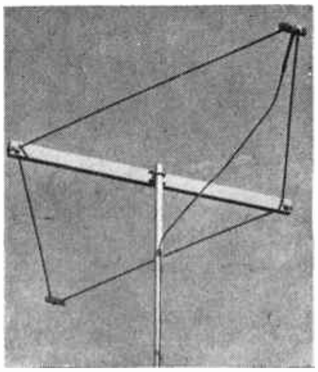

Fig. 31A-20

Transmission Lines at UHF. – Transmission line losses are much higher at UHF than VHF. Tubular 300-ohm line and coaxial line give much better results in wet weather than can be obtained with the use of the standard 300-ohm parallel wire flat lines, although the 300-ohm lines are better than the coaxial when dry. Line losses for different types of line are given below:

	Loss, Decibels per 100 Feet					
	100 mc		500 mc		1,000 mc	
Type of Transmission Line	Dry	Wet	Dry	Wet	Dry	Wet
Standard 300-ohm Flat Line	1.2	7.3	3.2	20.0	5.0	30.0
Tubular 300-ohm Line	1.1	2.5	3.0	6.8	4.6	10.0
RG 59/U Coaxial Line (75 ohm)	3.7	3.7	9.6	9.6	14.5	14.5
RG 11/U Coaxial Line (75 ohm)	1.0	1.0	5.2	5.2	7.8	7.8

When the antenna is designed to operate into a 300-ohm balanced line, and an unbalanced 75-ohm coaxial line is used, a connecting impedance transformer and balancing network is needed. This may all be incorporated into a unit called a "balun" (from *bal*ance-*un*balance) shown in Fig. 31A-21.

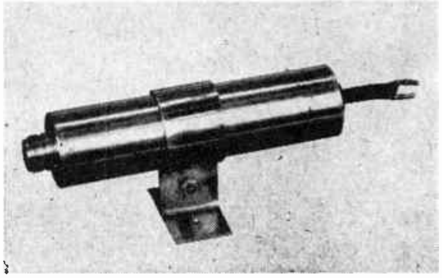

Fig. 31A-21

The balun may be used to a couple a

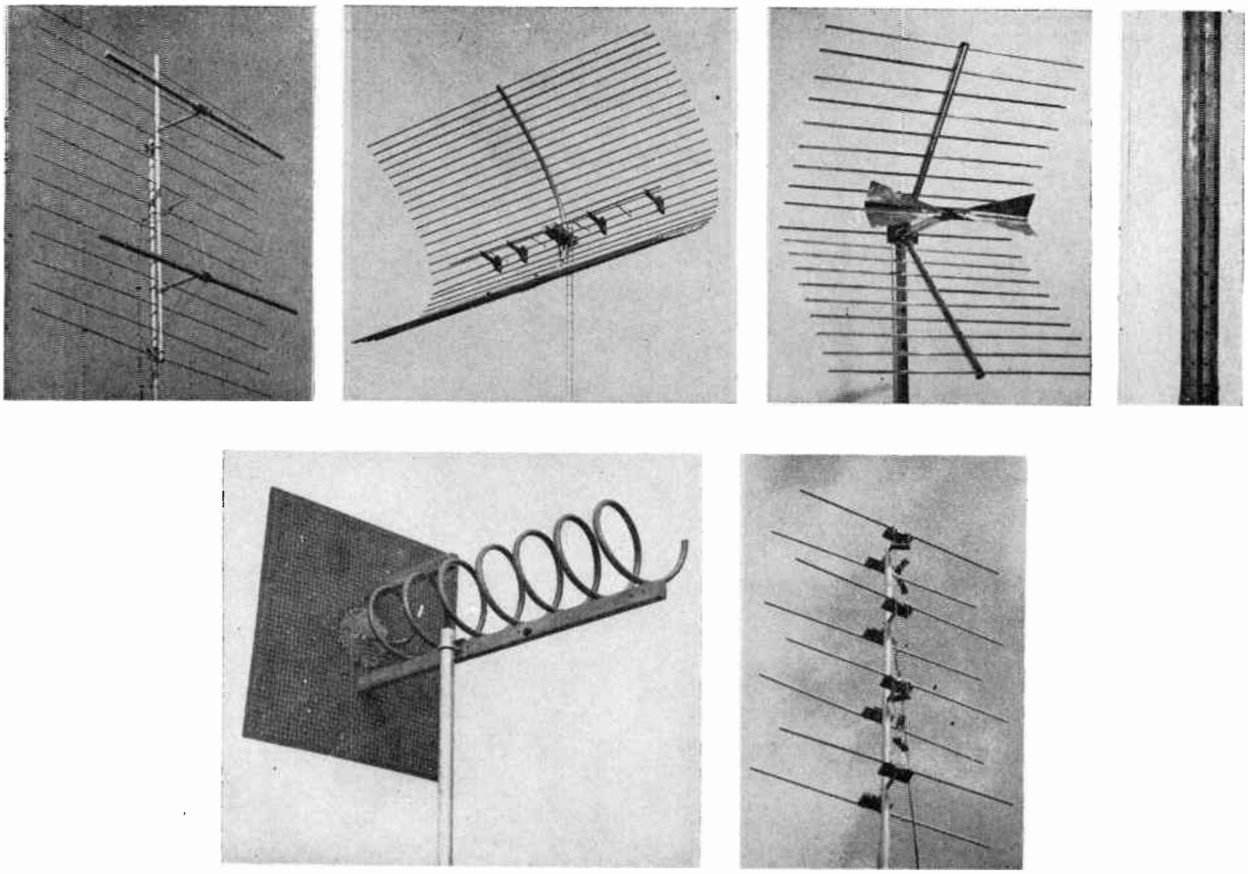

Fig. 31A-22

300-ohm line to a 75-ohm coaxial line, leading to a receiver designed for it. In that case, the balun is installed on the outside of the building near the point at which the line enters the building. A lightning ground is attached to the balun case, which replaces other lightning arresters. From the 75-ohm terminals of balun, the line runs to the 75-ohm input of the receiver.

If a coaxial line is used as a lead from a 300-ohm antenna to a 75-ohm input receiver, the balun is installed directly at the antenna. Lightning protection is provided by grounding the shield of the coaxial cable at the entrance to the building .

◆

NOTES

TELEVISION SERVICING COURSE

PREPARED BY

RCA INSTITUTES, INC.
A SERVICE OF RADIO CORPORATION OF AMERICA

HOME STUDY DEPARTMENT
350 West 4th St., New York 14, N. Y.

LESSON THIRTY TWO

PART I - PICTURE I-F AND DETECTOR STAGES

PART II - TROUBLESHOOTING THE PICTURE I-F AND DETECTOR STAGES

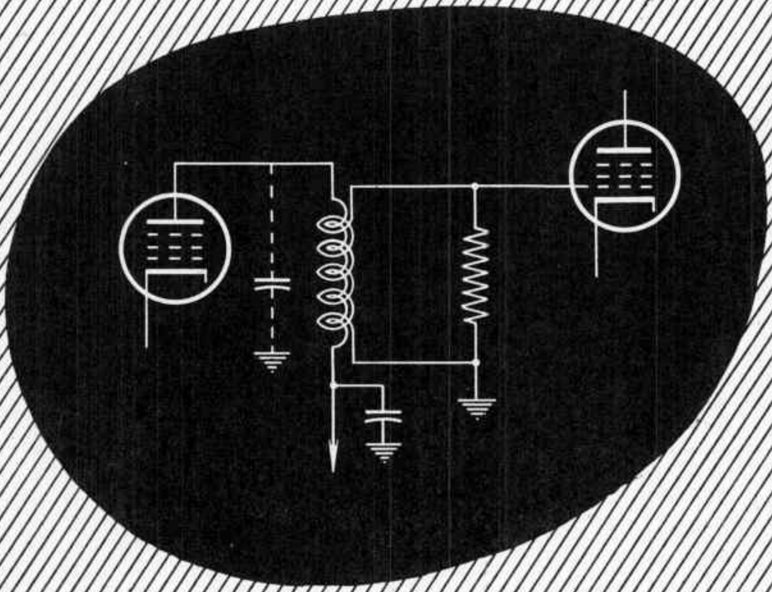

Lesson 32

PART I - PICTURE I-F AND DETECTOR STAGES

FUNCTIONS OF THE I-F AMPLIFIER

32-1. – The television signal output from the converter stage carries the picture and sound information which was received by the receiving antenna. However, at this point the information is carried by a lower frequency, called the intermediate frequency. This frequency is independent of the channel to which the receiver is tuned. The converted signal, called the *intermediate-frequency* or *i-f* signal, is coupled to the i-f amplifier stages. The i-f section produces most of the receiver's amplification. A block diagram of a typical intermediate-frequency amplifier is shown in Fig. 32-1.

Amplifiers. – The blocks marked 1st pix i-f, 2nd pix i-f, 3rd pix i-f and 4th pix i-f are amplifiers, as classified in Lesson 26. A four-stage amplifier of this type might have a total gain of 8,000. The signal into the 1st i-f amplifier is the intermediate frequency produced in the converter by the combination of r-f input and oscillator frequencies. The output of the last i-f amplifier stage is a greatly amplified version of this signal. The i-f output is coupled to the detector stage.

Detector. – Following the 4th picture i-f block in Figure 32-1 there is a stage marked *picture detector*. The detector is a rectifier in accordance with the classification of Lesson 26. This stage has the function of removing the picture information from the intermediate frequency signal. The output of the detector is the video *signal containing the desired picture information*, sync and blanking pulses. This is the form in which the signal is finally used by the picture tube. However, it is generally necessary to amplify the detector output, using one or two additional stages of video amplification before the signal is applied to the control grid circuit of the picture tube.

Traps. – The block diagram of Fig. 32-1 indicates three blocks designated as traps. These traps are required because the output of the mixer stage contains other signals in addition to the desired picture i-f signal. It is the function of the traps to prevent the passage of the undesired signals through the picture i-f amplifier.

There are three common sources of undesired signals that the traps are designated to eliminate. These are the associated sound, the adjacent sound,

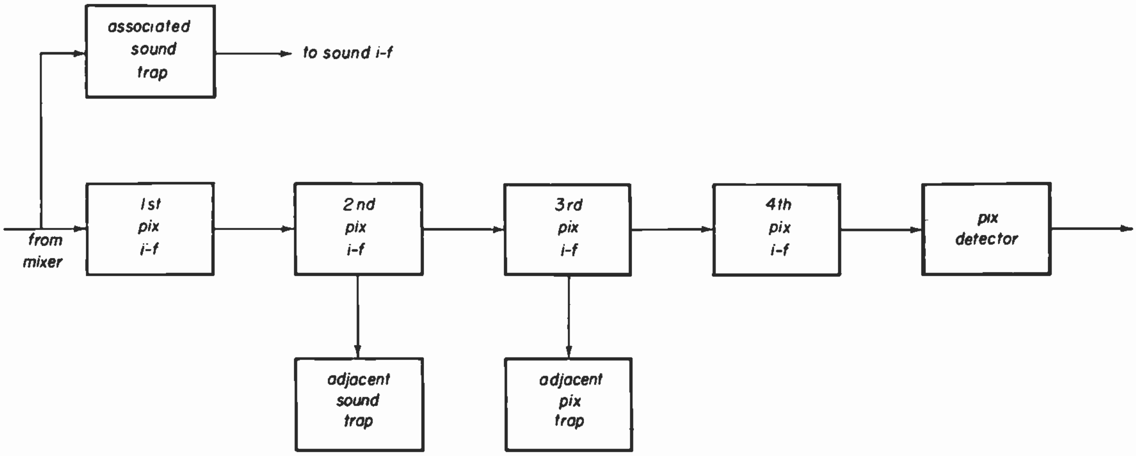

Fig. 32-1

and the adjacent picture intermediate carrier frequencies. The adjacent channel sound is the sound of the channel lower in frequency adjacent to the channel being received. The adjacent picture signal is the picture signal of the channel higher in frequency adjacent to the channel being received.

Sound Take-off. – In Fig. 32-1 there is a lead out of the associated sound trap marked *to sound i-f amplifier.* This is the pickup point for the sound i-f signal that is fed into the sound intermediate frequency amplifier. This point is generally referred to as the sound take-off point.

The take-off point does not have to be in the output of the mixer as shown in Fig. 32-1. In a number of receivers the sound take-off occurs after the 1st or after the 2nd stage of i-f amplification. In another type of receiver, the sound is permitted to pass through all of the i-f amplifier stages along with the picture signal. Both sound and picture signals are applied to the detector, and the sound is taken off after detection. Receivers using this last arrangement are referred to as "intercarrier sound" receivers. Intercarrier receivers have some performance characteristics that differ from the separated sound carrier type of receiver; a more complete discussion of the intercarrier principle is included in a later lesson.

TUNED AMPLIFIERS

32-2. Single-Tuned Amplifier. – The circuit shown in Fig. 32-2 is an amplifier. An amplifier stage of this type is a single-tuned stage because the plate load consists of one tuned circuit. This stage amplifies in exactly the same manner as the R-C amplifier discussed in Lesson 3, but here the resistance load has been replaced by the inductance L, the capacitance C and the resistance R, all in parallel. The plate load of the tuned amplifier includes a resonant circuit, therefore, instead of using just resistance.

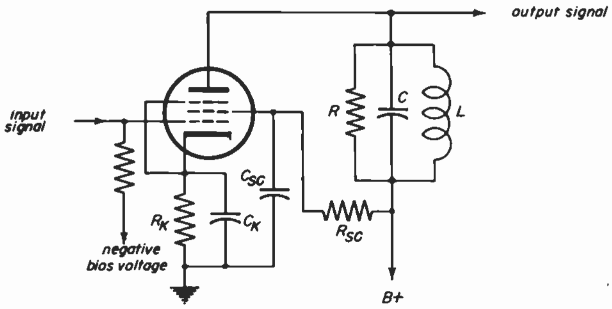

Fig. 32-2

As a result, the tuned stage amplifies well only those frequencies close to the resonant frequency of the tuned LC circuit.

Gain Characteristic. – The gain of a tuned stage is different for different frequencies. In any amplifier, the amount of gain depends on the value of the plate load, as described previously in Lesson 26. When the plate load is a tuned circuit, the impedance of the resonant circuit, measured in ohms, is maximum at the resonant frequency and is lower for frequencies above and below the resonant frequency. With a tuned plate load in the amplifier, therefore, the gain of the stage changes with different frequencies in the same way as the impedance of the resonant circuit. This is illustrated in Fig. 32-3. Notice that the highest value of the impedance is the resistance of the resistor across the tuned circuit. As a result, the maximum gain of the stage is the amount that could be obtained with this resistor as the plate load. Tuning the resonant circuit to a different frequency changes the frequency at which

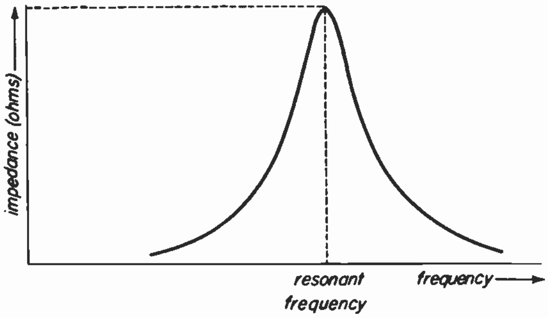

Fig. 32-3

maximum gain occurs because the maximum impedance of the tuned plate load then occurs at the new resonant frequency.

Bandwidth. – The range of frequencies through which the gain of the tuned amplifier is fairly uniform is commonly called the *bandwidth* of the amplifier. This depends upon the value of the shunt resistor R across the tuned circuit and the value of the stray capacitance C that tunes with the coil L. A small resistor indicates a stage with low gain and broad bandwidth; a high resistance has the opposite effect – high gain and narrow bandwidth. This is illustrated in Fig. 32-4. The amount of stray capacitance forming the tuned circuit with the inductance has the same effect as the amount of damping resistance as far as bandwidth is concerned – small values of C allow greater bandwidth, while larger values reduce the bandwidth for a given value of damping resistance. The smaller the value of stray capacitance the larger the parallel resistance that can be used, providing more gain for the same bandwidth.

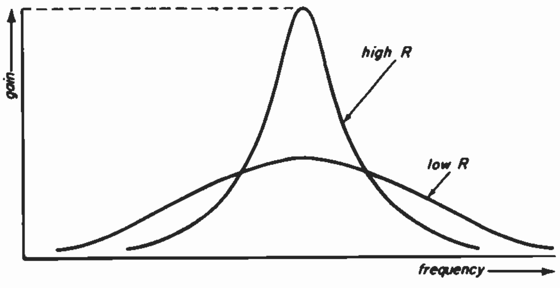

Fig. 32-4

Biasing. – The resistor R_k in the cathode circuit provides bias for the tube. The voltage developed across R_k may be only a part of the total bias, the remaining portion being provided by supplying the control grid with bias from either the AGC or manual picture control circuit. The condenser C_k bypasses R_k. In some circuits C_k is intentionally omitted to obtain more uniform operation of the overall amplifier circuit. This will be discussed in a following paragraph.

Screen Circuit. – The resistor, R_{sc}, is the screen dropping resistor. Its function is to lower the supply voltage to the proper value for the screen grid of the particular tube being used. C_{sc} is the screen bypass condenser. The purpose of this condenser is to short circuit the screen grid to ground for the signal frequency voltage.

TOTAL I-F GAIN AND BANDWIDTH

32-3. In practically all television receivers the i-f amplifier is called upon to supply much more gain than can be provided by one stage of amplification. Therefore it is necessary to connect several stages of amplification, as was indicated in the block diagram of Fig. 32-1.

The signal to be amplified includes many frequencies. The picture signal that must be amplified consists of the intermediate frequency picture carrier plus a group of additional frequencies that extend above and below the picture carrier frequency. These frequencies around the carrier frequency are called the sidebands or sideband frequencies. They must be amplified along with the carrier for proper picture reproduction.

Figure 32-5 shows a typical response curve of a complete television i-f amplifier system. The vertical axis of the curve represents gain of the amplifier and the horizontal axis indicates the frequency at which the gain is obtained. Note that the gain is constant over a wide range of frequencies. This required curve is quite different from that obtained with one stage of single tuned amplification.

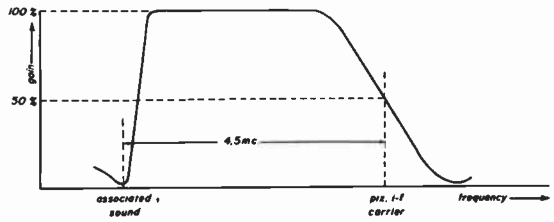

Fig. 32-5

To obtain this bandwidth, with the required amount of gain, the i-f amplifier generally uses three or four stages.

Stagger-tuned Amplifiers. – With identical single-tuned stages all having their peak gain at exactly the same frequency, the overall result would be high gain at the resonant frequency of the tuned circuits but the bandwidth would be even narrower than for a single stage. The result would be a very sharply peaked gain curve. However, if the peak gain of the individual stages is made to occur at different frequencies, the desired response of Fig. 32-5 can be obtained. An amplifier using this method of obtaining the desired response curve is called a stagger-tuned amplifier because the individual stage resonant frequencies are staggered with respect to one another.

When a number of stages are combined in a stagger tuned arrangement to get a certain overall result, there is a definite frequency to which each stage must be tuned. There is also a definite broadness of response or bandwidth required of each individual stage. All stages are not necessarily equally broad. Each stage individually is a single-tuned amplifier. The frequency to which each stage must be tuned and the bandwidth required of each stage is determined by the overall response and the number of stages used.

Example of Stagger Tuning. – Fig. 32-6 illustrates how two stages might be tuned to get the overall response indicated. Note that one stage is tuned to 23.6 mc while the second stage is tuned to 26.4 mc. Each stage has a bandwidth of 2.8 mc between the points where the gain is 70% of its maximum value. The overall result is an amplifier centered at 25 mc with a 4 mc bandwidth at the 70% points. Note that the overall amplifier has a more uniform response than the individual stages.

Damping Resistor. – The resistor across the tuned circuit of Fig. 32-2 is a very critical component when single tuned circuits are used in a stagger tuned amplifier system. This resistor is generally referred to as the *damping resistor*. The

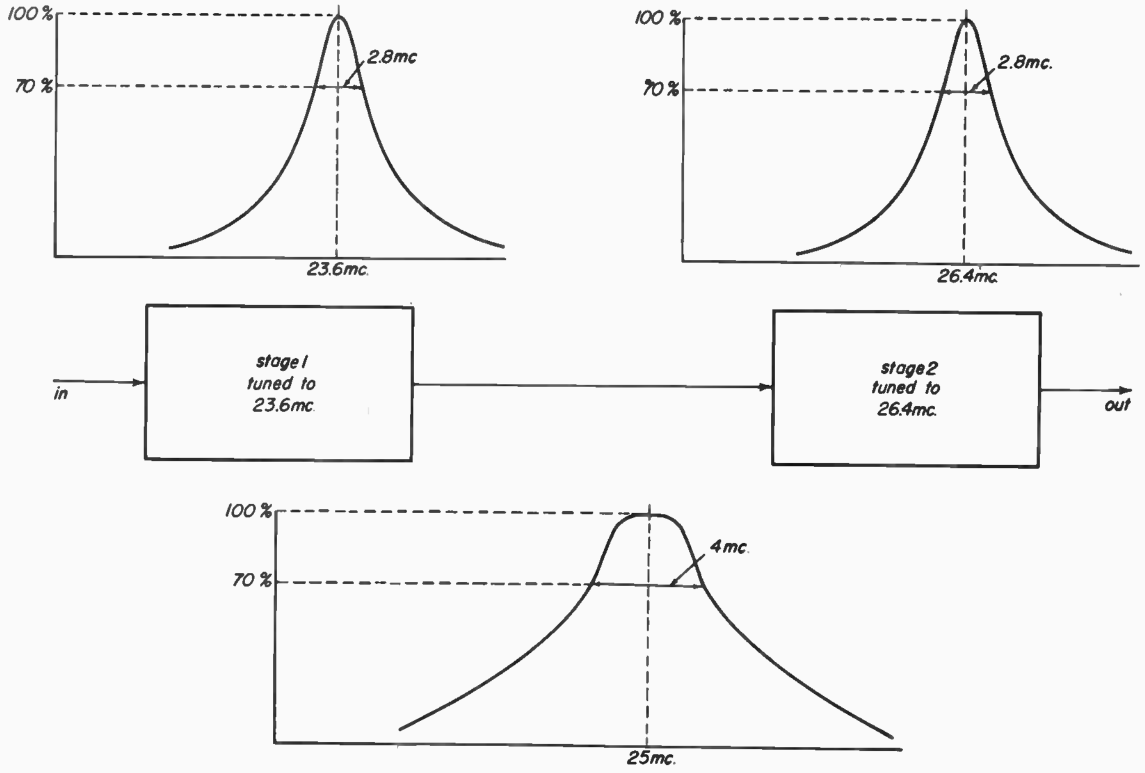

Fig. 32-6

value of this resistor determines the bandwidth of the individual stage and also the gain of the stage. An incorrect value of damping resistor can result in an overall response curve that is much different from what is required. Using too low a value of damping resistor results in too large a bandwidth for the individual stage with low gain, whereas too high a value produces too narrow a bandwidth, with too much gain at the resonant frequency of the tuned circuit.

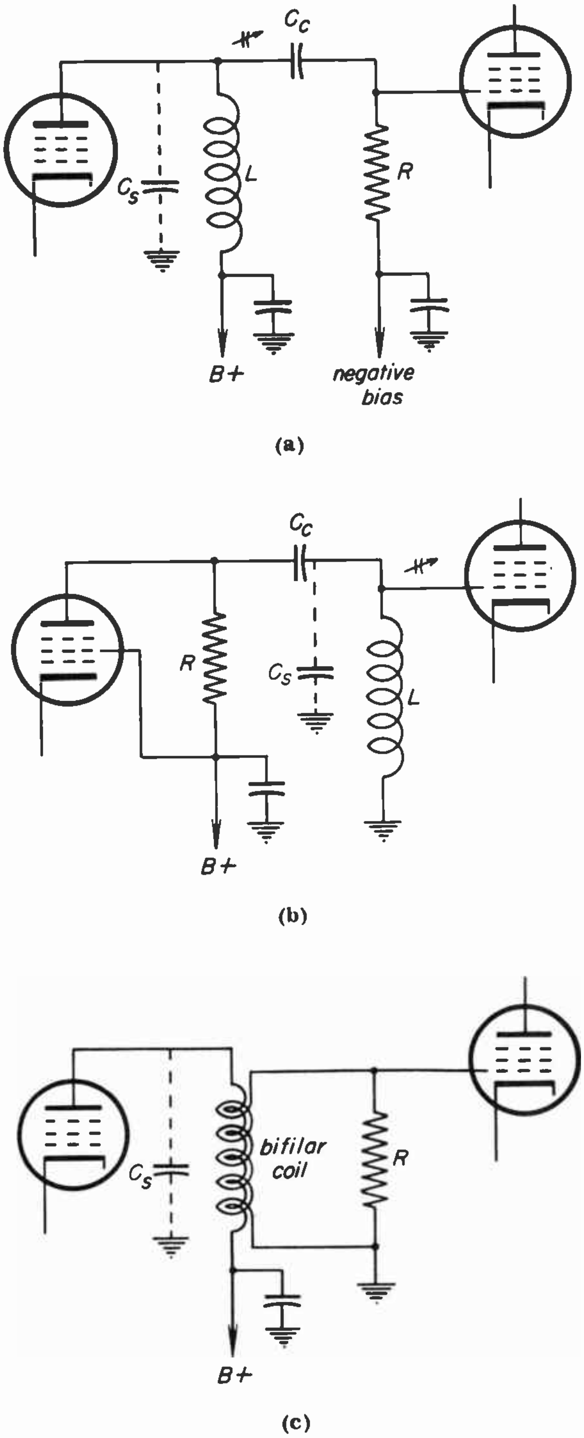

(a)

(b)

(c)

Fig. 32-7

Location of the Damping Resistor. – When single-tuned stages are connected to form a stagger-tuned system, it is possible to couple from one stage to the next in several ways. Fig. 32-7 illustrates three of the commonly used methods. In every case the damping resistor is effectively connected across the tuned circuit as far as the signal voltage is concerned. However, the damping resistor need not be connected across the tuned circuit directly.

In (a) of Fig. 32-7 the tuned circuit is composed of L and C_s. C_s is not usually a physical capacitor but consists of the stray wiring and the tube input and output capacities. Note that for the signal, C_s and L are in parallel since the low end of L is connected to ground through a bypass condenser. C_c is a coupling condenser and acts as a short circuit at the i-f signal frequencies.

R is the damping resistor in parallel with L for the signal. Note that the upper end of R is connected directly to the upper end of L for the signal frequency since the condenser C_c acts as a short circuit for the signal. Also, the lower end of R is connected to the lower end of L since the lower ends of both L and R are shorted to ground for the signal frequency through a bypass condenser.

In (b) the conditions are almost the same as in (a) except that the positions of L and R have been interchanged. L is in the grid circuit and R is in the plate circuit, but they are in parallel for the signal frequencies.

In Fig. 32-7 (c) the coupling condenser is omitted and the signal is transferred from the plate to the following grid by transformer action. This is accomplished by interwinding two coils to get very tight coupling between the plate side and the grid side. A coil of this type is called a *bifilar coil*. The circuit acts as if only a single coil were present as in either (a) or (b) but it permits the elimination of the coupling condenser. The damping resistor is the resistor R, which is directly in parallel with the tuned circuit.

Bifilar I-f Transformers. – Fig.32-8 illustrates the construction of the bi-filar i-f transformers. Instead of winding a single wire on the coil form, two wires are simultaneously wound parallel and directly adjacent to each other from the start of the winding to the finish.

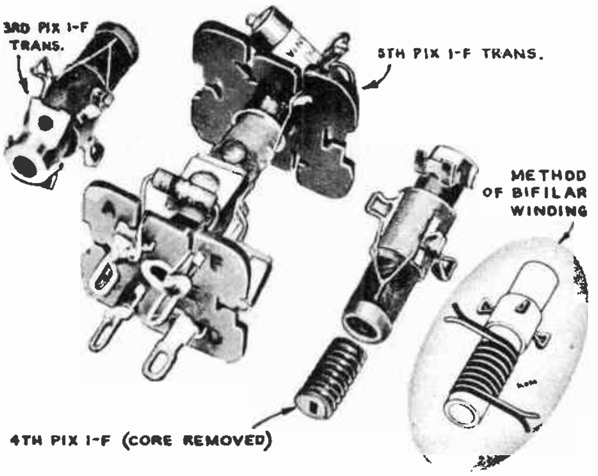

Fig. 32-8

An important advantage gained by the use of bifilar transformers over the single-wound coil-capacitor combination, is improved noise immunity due to low resistance provided by the secondary winding in the i-f grid circuits. Noise pulses which may be of sufficient amplitude to develop a charge on coupling capacitors would create a temporary excess of bias on the tube, thus causing momentary reduction of stage gain. Although a noise pulse would modulate the carrier towards the black level, each indication of such modulation on the kinescope is followed by a white tail destroying picture quality and sync. Bifilar transformers eliminate the necessity of a coupling capacitor and therefore reduce this objectionable effect.

Double-Tuned Amplifier. – The circuit arrangement in Fig. 32-9 is a double-tuned amplifier stage. The double-tuned stage has the advantage over the single-tuned stage in that for the same broadness of response and using the same tubes, a double-tuned stage will give a greater gain, perhaps twice the gain of a single-tuned stage. However, when a number of stages must be used to produce the required overall i-f response the superiority of the double tuned stages tends to be reduced. If the number of stages needed is sufficiently great the stagger-tuned arrangement is actually superior. Also, the alignment procedure for an i-f amplifier composed of double-tuned stages is more involved than the procedure required for a staggered single-tuned system.

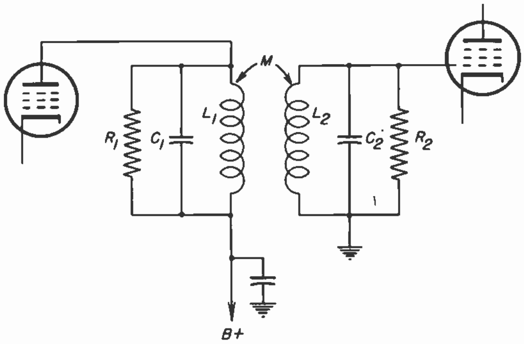

Fig. 32-9

Referring to Fig. 32-9, one of the double-tuned circuits is composed of L_1 and C_1 while the other tuned circuit is composed of L_2 and C_2. Both of these tuned circuits are resonant at the center of the band of frequencies that the stage is required to amplify. The two coils L_1 and L_2 are on the same coil form to provide mutual coupling (M) so that the transformer action between the coils couples the signal from one stage to the next.

Effect of R_1 and R_2. – The shape of the response curve of an individual double-tuned amplifier stage is controlled by damping resistors R_1 and R_2. Fig. 32-10 shows the three types of response that can be obtained from a double-tuned stage. Curve (a) is called an *overcoupled* response curve and results from a combination of high values for R_1 and R_2 and close coupling (spacing) between L_1 and L_2. The overcoupled curve is characterized by the dip in the center of the curve. Curve (b) is referred to as a *critically coupled* response curve. It is characterized by the flat top. This curve results

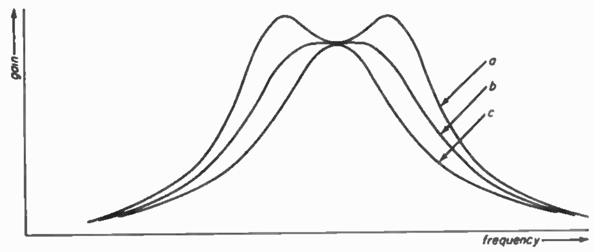

Fig. 32-10

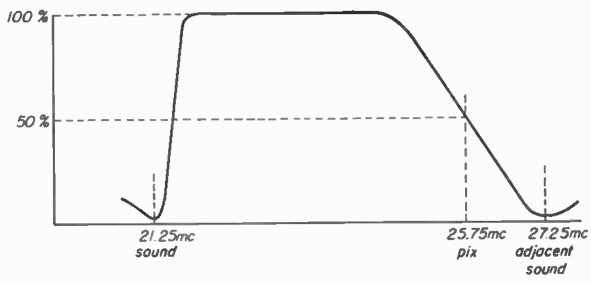

Fig. 32-11

from exactly the right combination of values for R_1 and R_2 and the coupling between L_1 and L_2. For a fixed coupling between L_1 and L_2 the values of R_1 and R_2 required for curve (b) would be lower than that required to produce curve (a). Curve (c) is an *undercoupled* response curve and it is characterized by the fact that it comes to a definite peak. Reducing the value of R_1 and R_2 below that required to produce curve (b) would result in curve (c).

I-F TRAP CIRCUITS

32-4. In the block diagram of Fig 32-1 traps were indicated for the associated sound, the adjacent sound, and the adjacent picture i-f carriers. The exact frequency to which each of these traps must be tuned depends on the intermediate frequency range of the particular receiver.

As an example, suppose the intermediate frequency of the picture carrier is 25.75 mc as indicated in Fig. 32-11. Further assume that the receiver is tuned to Channel 3 and that the local oscillator of the receiver is higher in frequency than the incoming r-f signal. The picture carrier frequency for Channel 3 is 61.25 mc. Therefore, the local oscillator must be above this frequency by an amount equal to the picture i-f. Therefore the local oscillator frequency when the receiver is tuned to Channel 3 is 61.25 plus 25.75 or 87.00 mc.

The sound carrier for Channel 3 is 65.75 mc. When the sound carrier beats with the 87.00 mc oscillator frequency the sound i-f produced is 87.00 minus 65.75 or 21.25 mc. This is the frequency to which the associated sound trap is tuned.

Suppose that Channel 2 can be received at the particular receiving location. Though the receiver is tuned to Channel 3 the sound carrier of Channel 2 will get to the converter stage. When the sound carrier of Channel 2 at 59.75 mc beats with the 87.00 mc frequency of the local oscillator the intermediate frequency produced is 87.00 minus 59.75 or 27.25 mc. This is the frequency to which the adjacent sound trap must be tuned. If Channel 4 can also be received at the receiving location interference is possible from the Channel 4 picture carrier located at 67.25 mc. When the 67.25 mc picture carrier beats with the 86.00 mc local oscillator signal the difference frequency produced is 19.75 mc. This is the frequency to which the adjacent picture trap is tuned.

For different intermediate frequencies in a receiver the trap frequencies would be different but they have the same relationship as in the above example.

Absorption Traps. – Fig. 32-12*a* shows a type of circuit called an absorption trap, which is commonly used in the picture i-f amplifier stages in order to reject an unwanted frequency by absorbing energy at this frequency. The trap consists of a coil and condenser connected in parallel, like C_2 and L_2 in Fig. 32-12. The resonant frequency of the trap circuit depends on the values of L and C. The trap circuit is coupled to the amplifier's tuned plate load by transformer action between the coils L_1 and L_2. The voltage induced in the secondary coil L_2 by the primary coil

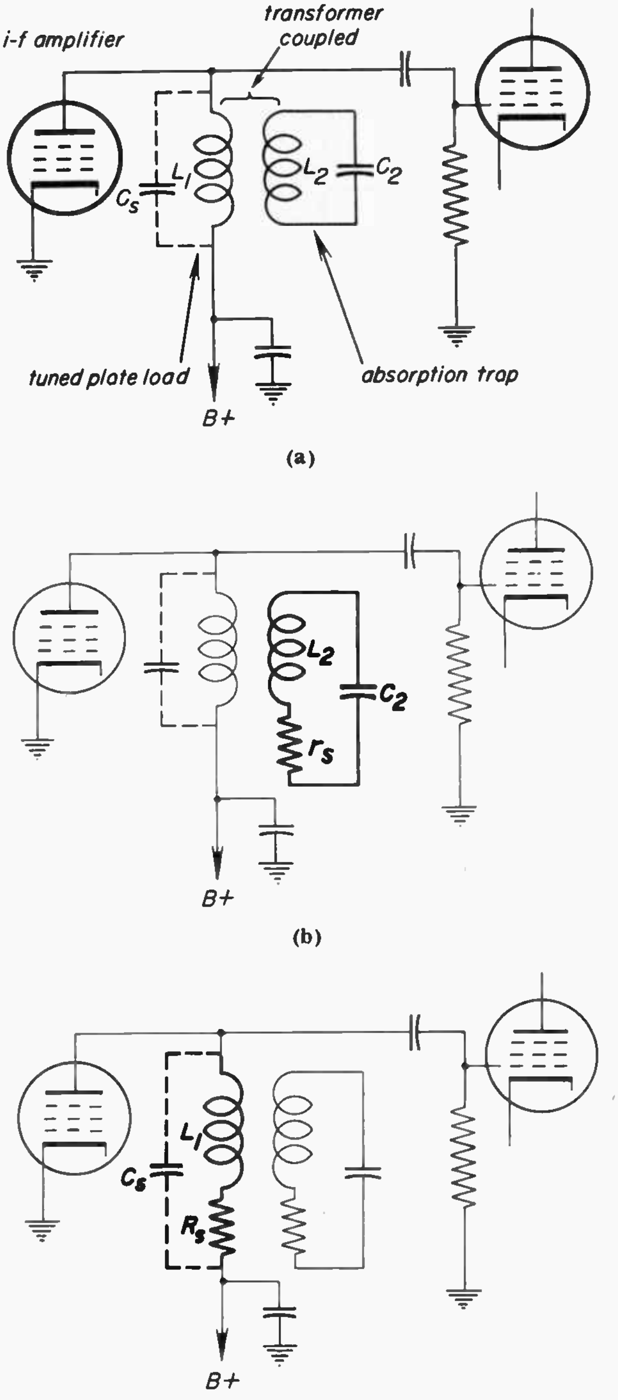

(a)

(b)

(c)

Fig. 32-12

L_1 produces current in the secondary because the trap is a closed electric circuit.

Any current flowing in the secondary circuit of a transformer must be supplied by the primary circuit. Fig. 32-12*b* illustrates the fact that current flows in the trap circuit. The voltage induced in L_2 by the current in the primary coil L_1 produces current in the secondary circuit consisting of L_2, C_2 and r_s in series. At the resonant frequency of the trap circuit, which is the frequency to be rejected, the capacitive reactance of C_2 and the inductive reactance of L_2 cancel and maximum current flows through r_s in this series resonant circuit. The current that flows through r_s in the secondary must come from the primary circuit. Therefore, the primary circuit can be considered to be as shown in Fig. 32-12*c* with R_s representing a resistance in the primary equivalent to the resistance r_s in the secondary. At the resonant frequency of the trap circuit r_s and R_s are pure resistances without any reactance. The equivalent primary resistance R_s is in series with L_1 because the transformer action is produced by each turn in the coil.

The equivalent resistance R_s is larger than the secondary resistance r_s because the transformer effectively has a voltage step-down turns ratio from primary to secondary, or looking from the secondary back to the primary the turns ratio is a current step-down and impedance step-up. For a typical picture i-f circuit the equivalent resistance R_s on the primary due to the absorption trap circuit on the secondary is several thousand ohms.

Note that the resistance R_s is *inside* the parallel L-C circuit. It is in series with L_1 in the tank circuit but is *not* in series with the complete tuned circuit that is the plate load. When the resistance within a parallel L-C circuit increases, its Q is reduced. With a lower Q in a parallel L-C circuit the impedance is reduced. With the high resistance of R_s in series with L_1 in the primary, at the resonant frequency of the absorption trap, therefore, the impedance of the i-f amplifier's tuned plate load becomes smaller, reducing the gain of the amplifier at the rejection frequency.

The absorption trap reduces the gain of the i-f amplifier the most at the frequency to which the trap circuit is tuned. When the trap is tuned to the rejection frequency, the effect of R_s in the primary lowers the gain of the i-f amplifier at the trap frequency and the unwanted frequency is rejected. If the trap is tuned to some other frequency, maximum rejection will still be produced at the resonant frequency of the trap but this will not be the frequency that should be rejected.

Sound Take-Off Trap. – In the block diagram of Fig. 32-1 the sound signal is shown as the output of the associated sound trap. When the sound signal is taken off a trap circuit, one side of the trap coil is grounded as shown in Fig. 32-13. The sound take-off point is generally a tap on the coil, as illustrated. At the trap resonant frequency, which in this case is the associated sound i-f carrier, L_1 induces a voltage in L_2 which causes an appreciable current to flow in the trap circuit. This current in turn causes a voltage to appear across L_2 and this voltage is used to feed the sound i-f amplifiers. The energy absorbed by the trap is applied to the sound i-f amplifier, as the voltage between ground and the tap on the coil.

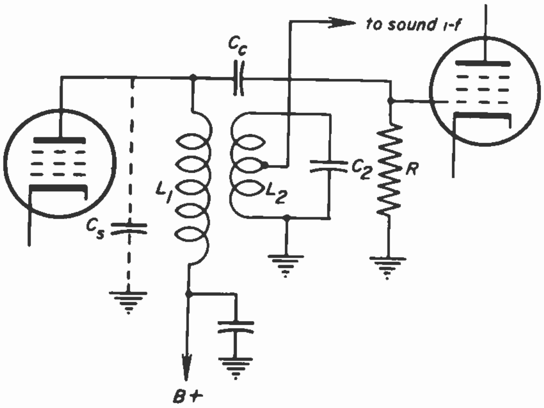

Fig. 32-13

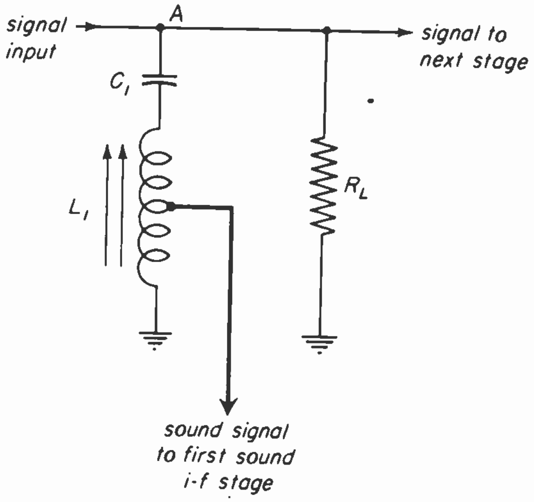

Fig. 32-14

Another type of trap circuit that is used to take off the associated sound signal is illustrated in Fig. 32-14. L_1 and C_1 form a series resonant circuit in shunt with the load resistor R_L. With L_1 and C_1 tuned to the frequency of the sound signal, the series resonant circuit provides a low impedance path that short-circuits the load resistor for the sound signal. Maximum current flows in the L_1 C_1 circuit at resonance but the voltage across C_1 is opposite to the voltage across L_1, the two cancelling out from point A to ground. Therefore no output is produced across R_L for this frequency and the sound signal is rejected from the output. However, the voltage across L_1 is maximum at the resonant frequency. Since this is the frequency of the sound signal, while it is rejected in the output across R_L the sound signal is available as the voltage across L_1. Part of this voltage is taken between the tap on L_1 and the ground side, and applied to the grid of the first sound i-f amplifier stage. L_1 is made adjustable so that the series resonant circuit can be tuned to the sound signal, providing maximum rejection in the output across R_L and maximum signal voltage across L_1 for the sound amplifier.

Cathode Trap. – An alternative type of absorption trap circuit is shown in Fig. 32-15. Here the trap consists of the coil L_1 and the tuned circuit made up of the coil L_2 and the condenser C_2. This is called a cathode trap because it appears in the cathode circuit of the tube. The trap works on the principle of degeneration. Briefly, degeneration in the cathode circuit results when there is any appreciable impedance to the signal frequency present in the cathode circuit. In Lesson 26 degeneration was discussed in connection with the cathode resistor and the cathode bypass condenser. The result of degeneration is to reduce the effective signal voltage appearing between the grid and cathode of the tube, because the varying cathode voltage has the opposite polarity of the applied signal voltage.

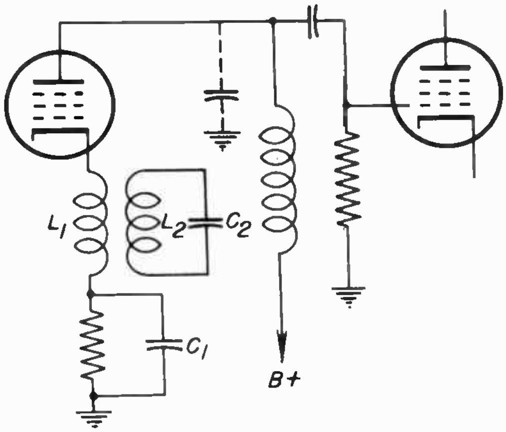

Fig. 32-15

This in turn results in reduced output from the tube.

In the circuit of Fig.32-15, the coil L_2 and the condenser C_2 act like a large resistor in series with the coil L_1 at the resonant frequency of the tuned trap circuit. Note that this effective resistance is in series with both the primary coil L_1 *and* the condenser C_1 in this series resonant circuit, whereas in the plate-coupled absorption trap the effective resistance was in series with the primary coil but the primary tuning capacitance was in shunt to form a parallel resonant circuit. Therefore in the case of the cathode trap the impedance of the entire primary circuit increases at the trap frequency. In the case of the plate coupled absorption trap the impedance of the parallel resonant circuit in the primary decreases at the trap frequency.

Degeneration results at the frequency of the trap circuit and the output of the stage is materially reduced. At frequencies somewhat removed from the resonant frequency of L_2 and C_2 the trap has no appreciable effect.

I-F DECOUPLING CIRCUITS

32-5. I-f Circuit Decoupling. – In Fig. 32-16 the resistor R_1 and the condenser C_1 form a decoupling filter. The same is true of R_2 and C_2. The purpose of these decoupling filters is to prevent signal from feeding back from the plate circuit of V3 to the plate circuit of V1. The feedback could produce regeneration or oscillation. Regeneration is the condition that exists when some of the output signal of an amplifier is fed back to the amplifier input in such a manner that a further amplified version of the signal appears at the output. An amplifier in which regeneration occurs is unstable and the picture produced may be smeared. For regeneration to occur an input signal must be applied to the i-f amplifier. If a sufficiently large amount of the output signal is fed back to the amplifier input in the proper manner or if the gain of the amplifier is sufficiently great the result is oscillation. In the case of oscillation a signal appears at the output of the i-f amplifier even in the absence of an input signal. This may completely prevent the passage of the desired pix signal through the i-f amplifier or it may result in a badly smeared and distorted picture.

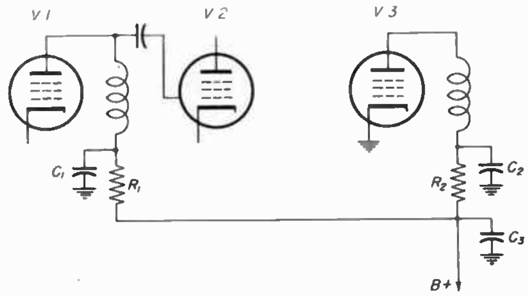

Fig. 32-16

Amplifier Without Plate Decoupling. – Fig.32-17 shows how the signal might be fed back from the plate circuit of V3 to the plate circuit of V1 if the decoupling filters were not present. Note that the output of V3 is taken between V3 plate and ground. This output is developed

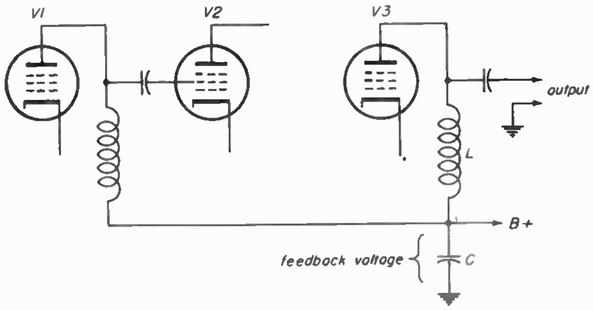

Fig. 32-17

across the plate load impedance of V3. If the condenser C is a perfect short circuit to the signal frequency no signal voltage appears across C. However, if the condenser is not a perfect short, as is the actual case, a voltage divider action occurs. The voltage divider is formed by the coil L and the condenser C. The portion of the output voltage that appears across C also appears in the plate circuit of V1. Therefore, this output voltage is fed to V2 and through the amplifier a second time. A portion of this reamplified signal will again be fed back to the V1 plate, causing either regeneration or oscillation.

Operation of Plate Decoupling Filter. – Fig. 32-18 is a rearranged version of Fig. 32-16, to illustrate the effect of the decoupling filters on the signal fed back. The decoupling filters serve to divide down the feed-back voltage. As a result, the voltage actually in the V1 plate circuit is greatly reduced. Part of the output voltage of V3 is developed across C_2. If C_2 is of the correct value the voltage developed across it is only a small portion of the V3 output. The voltage across C_2 is fed to a voltage divider composed of R_2 and C_3. R_2 and C_3 are picked so that most of the voltage applied to this divider is developed across R_2 and very little appears across C_3. The voltage appearing across C_3 is fed to a second divider composed of R_1 and C_1. Here again most of the voltage drops across R_1 and very little across C_1. The voltage appearing across C_1 is a very small fraction of the original voltage appearing across C_2. Therefore, the decoupling filters can reduce the feedback voltage to a negligible amount.

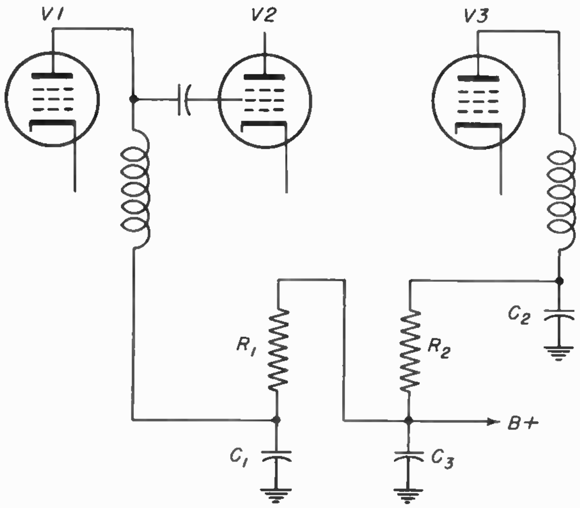

Fig. 32-18

Effect of Plate Decoupling Resistor on D-C Voltage. – Referring again to Fig. 32-16 note that the direct current in a plate circuit with a decoupling filter must flow through the decoupling resistor. This causes a voltage drop across the decoupling resistor and a reduction in the voltage available at the plate of the tube. The value used for the decoupling resistor cannot be made so large that the d-c voltage lost across it becomes excessive. Otherwise the value of the decoupling resistor is not critical.

Some receivers use cascaded decoupling as illustrated in Fig. 32-19. Here R_1–C_1 form a decoupling filter of the type just explained. R_2–C_2 and R_3–C_3 do likewise. However, in this arrangement the lower end of the individual decoupling resistors R_1, R_2, and R_3, are not returned to a common point. Instead further isolation of the individual stages is provided by the addition of R_4–C_4 and R_5–C_5. Note that the direct current for both V1 and V2 must flow through R_5 to get to B plus. R_5 is generally a low value resistor to prevent an excessive voltage drop due to the combined current of the two tubes. This arrangement can be extended to include four or more tubes.

Effect of Plate Decoupling Filter on A-C Signal. – The presence of the decoupling condenser at the ground side of the plate load effectively shorts this point to ground for the signal frequency. There-

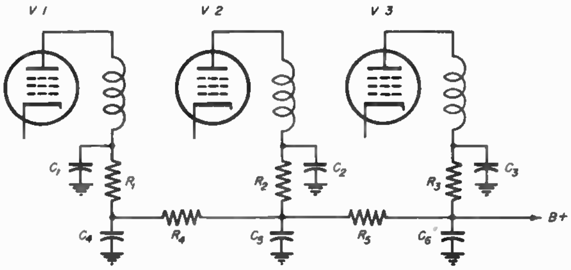

Fig. 32-19

fore, the point where the decoupling condenser connects into the plate circuit is the low potential side of the plate load for an a-c signal. The plate load impedance is between the plate of the tube and the plate decoupling condenser. This condenser provides a low impedance path for the a-c signal current to flow to ground, thereby confining the signal current of a given tube to the circuits directly associated with that tube. The signal current return path is definitely established by the condenser, making it unnecessary for the current to flow through the power supply leads back to the power supply and then to ground.

Grid Circuit Decoupling. – Fig. 32-20 illustrates grid circuit decoupling. Here the decoupling filters are R_1 C_1, R_2 C_2, and R_3 C_3. Grid decoupling is included for exactly the same reason as plate circuit decoupling. Remember that the damping resistor R in the grid circuit is part of the a-c plate load for the previous tube and therefore some of the a-c signal current flows through R. If the low end of the damping resistor returns to a source of negative bias voltage and if this source of bias voltage is used to feed several tubes the same possibility for feeding the signal back exists as did in the plate circuit.

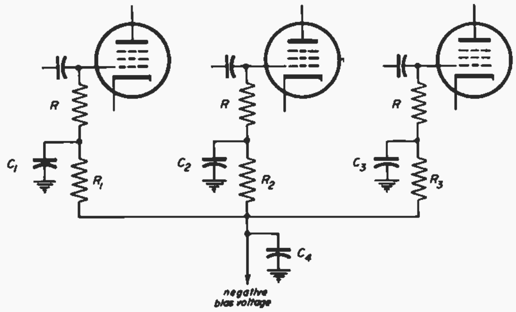

Fig. 32-20

Here a d-c voltage drop in the decoupling resistor is not a problem, however, since no direct current flows in the grid circuit. Therefore, larger values of decoupling resistors are found in the grid circuit than in the plate circuit.

Filament Circuit Decoupling. – Since the possibility for signal feedback exists whenever elements of the different amplifier tubes must be supplied from the same power source, decoupling is included in the filament circuit as well as in the plate and grid circuits. Fig. 32-21 illustrates one type of filament decoupling. L_1 and C_1 make up the filter for V1 while L_2 and C_2 make up the filter for V_2. C_1 and C_2 provide a low impedance path to ground for any signal current that might be flowing in the filament circuit due to cathode-to-heater capacitance. L_1 and L_2 are high r-f impedances to prevent the signal from flowing along the filament line from one tube to another. However, the impedance of the filament chokes is negligibly small for the 60-cycle a-c power, so that the filaments are in parallel for the applied filament voltage.

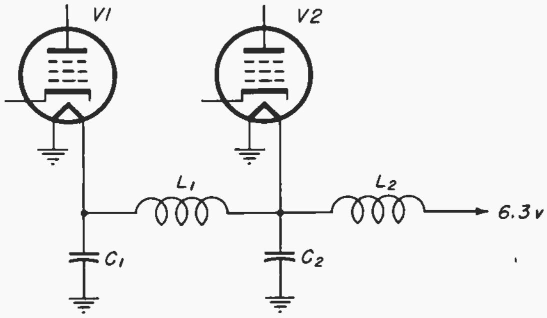

Fig. 32-21

Inductances must be used in the filament circuit rather than resistances because the current in the filament circuit is high. If resistances were used the voltage drop, even in a relatively small resistor, would be appreciable and the voltage available to supply the tube filaments would be below normal. Although the filament chokes have a high impedance for the a-c signal, the voltage drop due to 60cps filament current is practically zero.

I-F GAIN CONTROL

32-6. If the signal available at the output of the detector block of Fig. 32-1 is too large or too small the quality of the picture suffers. Too much signal causes overload; with too little signal there is a weak picture. Since the input signal to the receiver may range from a few microvolts up to an appreciable fraction of a volt some means must be provided to adjust the receiver gain in order to keep the signal within the required limits. The large variation in the size of the input signal is a result of the variety of receiving locations, variations in transmitter power, receiving antenna, etc.

Manual I-F Amplifier Gain Control. – Fig. 32-22 shows a means for controlling the i-f amplifier gain manually. R_1 is the gain control potentiometer. By varying the position of the arm of R_1 the bias voltage applied to the i-f tube is changed. As the bias is made more negative the gain of the amplifier decreases.

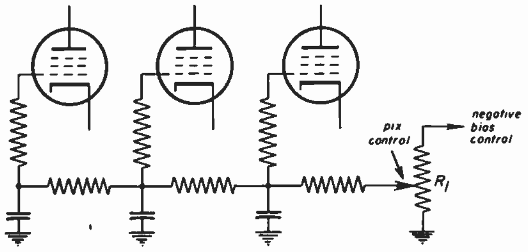

Fig. 32-22

Automatic Gain Control. – In most receivers the bias on the i-f amplifiers is not varied manually to control the gain of the receiver. Instead, circuits are used which automatically vary the bias on the i-f amplifiers so that the output of the detector remains at approximately a constant level for a wide range of input signal levels. Circuits of this type are automatic gain control circuits, usually called AGC. The AGC circuit varies the i-f amplifier gain in accordance with the strength of the incoming signal so that the output of the detector remains substantially constant. In effect, AGC circuits measure the detector output. If this output is found below normal the AGC circuit automatically shifts the bias of the i-f amplifier tubes to increase the i-f amplifier gain. If the detector output is measured and found above normal, the AGC circuit shifts the bias in the negative direction thereby reducing the gain. In a receiver containing AGC a manual contrast control is incorporated in the video amplifier to vary the picture contrast. The details of typical AGC circuits will be discussed in a later lesson.

Detuning Effect of Gain Control. – When the bias on the i-f amplifier tubes is varied by the gain control the input capacitance of the tube varies. This variation of input capacitance with gain is called the *Miller effect.* As was previously mentioned, the capacity used to tune the single tuned amplifier load is made up of the stray wiring capacities and the shunt capacities of the tubes. Therefore the input capacity of an i-f amplifier tube is part of the tuning capacity of the load for the previous stage. If the input capacity varies, the frequency to which the previous stage is tuned will vary. This is undesirable because each stage must be tuned to a definite frequency to achieve the desired overall response curve. If something were not done to counteract the Miller effect, therefore, the overall response curve would change its shape as the gain control is moved from one setting to another.

Unbypassed Cathode Resistor. – In the beginning of this lesson it was stated that sometimes the condenser across the cathode resistor is intentionally omitted even though this results in degeneration. However, the unbypassed cathode resistor counteracts the Miller effect. If the proper value of cathode resistor is left unbypassed in the cathode circuit of an i-f amplifier tube the input capacity will remain relatively constant even though the bias is varied by the setting of the gain control. The relatively uniform input capacity results because the degenerative feedback counteracts the Miller effect. However, the unbypassed resistor causes a reduction in the gain of the stage.

Overload. – Fig. 32-23 shows the type of picture that results when the signal overloads the i-f stages or the video amplifier stages. Depending on the point in the i-f system at which the overload first occurs the result may be as shown in the illustration or there may be a buzz in the audio, or both. In the r-f amplifier the result may be cross-modulation of one TV station with another resulting in two pictures from different stations present on the kinescope at the same time.

Fig. 32-24 indicates the various points at which overload may occur. Note that

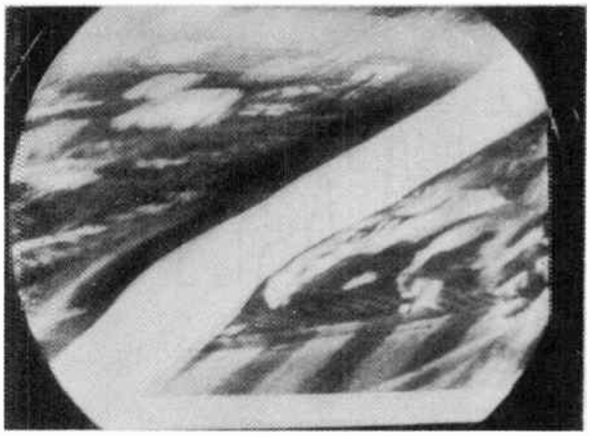

Fig. 32-23

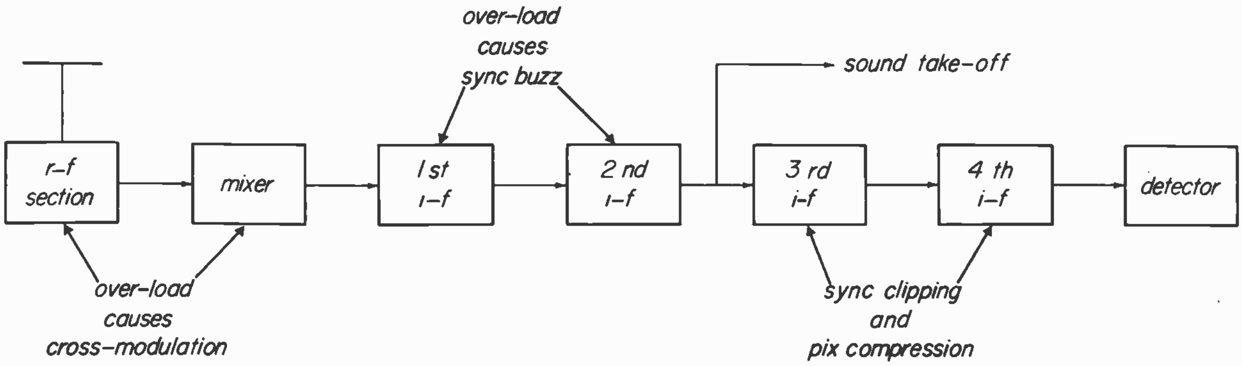

Fig. 32-24

for cross-modulation to take place the overload occurs in the r-f amplifier. For sync buzz in the audio, the overload would generally be before the sound take-off point. For the picture to compress toward black the overload usually occurs in the higher level i-f stages or in the video amplifier stages. The compression of the picture toward black is accompanied by faulty sync. More than one indication of overload may occur at the same time.

Cross-Modulation. – Cross modulation results when a strong undesired r-f signal arrives at the r-f amplifier grid along with the desired r-f signal. The undesired signal might be on an adjacent channel. The selectivity of the r-f amplifier input circuits may not be sufficiently great to eliminate the undesired signal. As a result of the presence of these two signals at the r-f amplifier grid, the modulation of the undesired signal can be transferred to the carrier of the desired signal. Once this has occurred, the desired signal passes through the remainder of the receiver, carrying along with it the picture information of the undesired signal The result is picture information from both the desired and the undesired station appearing on the kinescope at the same time. Usually the desired information produces the more apparent picture while the undesired signal produces a vertical bar due to its horizontal blanking pulses. This bar tends to drift horizontally back and forth across the screen, like a windshield wiper. The reason for the transfer of modulation from one carrier to another is that large signals at the r-f amplifier grid cause non-linear operation of the tube, producing detector action.

Sync Buzz. – If the incoming signal is large enough to interfere with the proper operation of the i-f amplifier tubes common to both the sound and picture signals, the result is a buzz in the audio output. This buzz is due to the fact that cross-modulation of sound and picture signals can occur. The sound carrier becomes modulated with the picture information but since the most pronounced picture frequency in the audio range is the vertical blanking repetition rate of 60 cps this frequency is the one that is heard.

Picture Compression and Faulty Sync. – Fig. 32-25 illustrates how the sync pulses and the picture information in the video signal can be compressed because of overload in a stage amplifying the signal. With too much signal in the input, the amplifier may limit and clip the extreme amplitude levels. As a result, the sync pulses will be compressed or removed

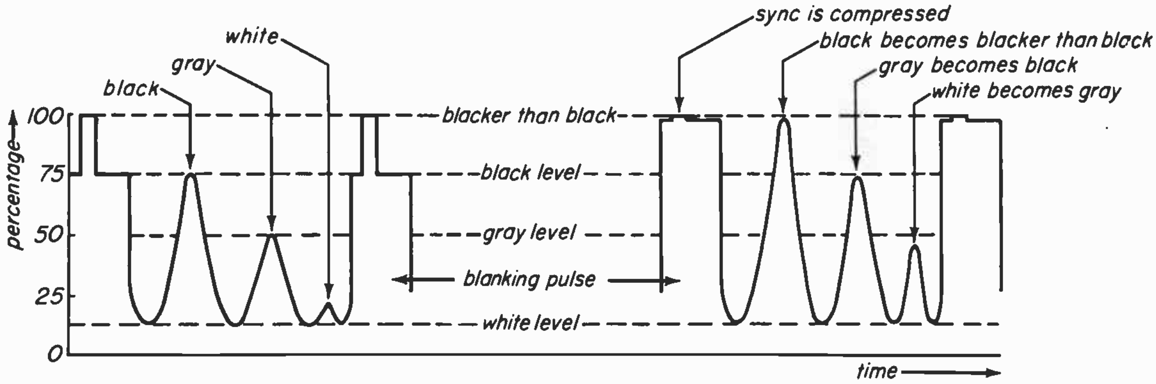

normal video signal

overloaded video signal

Comparison of normal and overloaded signal

Fig. 32-25

from the video signal output of the overloaded amplifier stage. When the signal output for the black level is limited and lower amplitude levels corresponding to gray and white are amplified more than normally, the effect of overloading brings the lower amplitude levels closer to the black level, compressing the picture information. Black stays black, but gray can become black, and white can become dark gray, making the reproduced picture look like the photo in Fig.32-23. Since the sync pulses are either compressed or removed from the output of the overloaded amplifier, the picture is not synchronized.

RECEIVER SENSITIVITY AND PICTURE CONTROL.

32-7. The *gain* or *sensitivity* of television receivers is controlled by the bias voltage applied to the control grid of the r-f and several i-f stages. The value of the bias voltage must be made variable because a different receiver gain or sensitivity is needed for a weak signal than for a strong signal. R-f and i-f bias is varied manually by means of the picture control in receivers which do not have AGC. In this case the manual picture control does two things:

1. The setting of the control establishes the receiver sensitivity; it determines the weakest picture signal that can be received at any particular setting.

2. The setting of the control establishes the *contrast* or how strong the picture signal will be when it arrives at the kinescope control grid.

R-f and i-f bias is varied automatically in receivers equipped with AGC. The *sensitivity* of this type of receiver is *automatically* established for the strength of picture signal being received. The *contrast* is *manually* established by means of the contrast control, which is located in the video stages and has no affect upon r-f and i-f bias or sensitivity. The contrast control in this case functions either to vary the amplification of the video amplifier or to vary the video signal level.

Weak Signals and Strong Signals. Receiver sensitivity for weak signals is limited by the amount of snow generated in the receiver rather than by the amplifying action of the receiver. The snow is amplified with the signal. This is why the strength of the signal compared to the strength of the snow (signal-to-noise ratio) determines the weakest signal which may be received.

Snow is generated in the converter stage. Therefore amplification of the signal before it reaches the converter (in the r-f section) improves the strength of signal compared to the strength of snow. When receiving weak signals the gain of the r-f stage should be as large as possible. Keep this in mind while we consider what happens when strong signals are received.

When strong signals are received the signal-to-noise ratio is naturally good but means have to be provided to prevent overloading one or more of the amplifiers in the picture channel (r-f, i-f and video stages). This is done by reducing the receiver sensitivity for strong signals. Since the r-f stage is the first amplifier in the picture channel it is desirable to reduce its gain more than i-f gain is reduced to prevent overloading. When receiving strong signals, therefore, the gain of the r-f stage should be as small as possible. Because of the strong signal, the snow is no problem.

R-f and I-f Bias. – The r-f gain should be as large as possible for weak signals and should be reduced more than the i-f gain for strong signals. Does this mean that the bias applied to the r-f stage has to be *more* negative than the bias applied to the i-f stages for strong signals, while for weak signals the negative r-f bias has to be *less* than the i-f bias? The answer depends upon what tubes are used in the r-f and i-f stages. A particular value of bias voltage produces a different amount of gain in one type of tube than it does in another. In many receivers the value of r-f bias compared to i-f bias *does* have to be reversed for weak and strong signals. In other receivers the r-f and i-f bias values do not reverse but merely change by different amounts for various strengths of input signals. These bias changes occur as a result of AGC action or adjustment of the manual picture control.

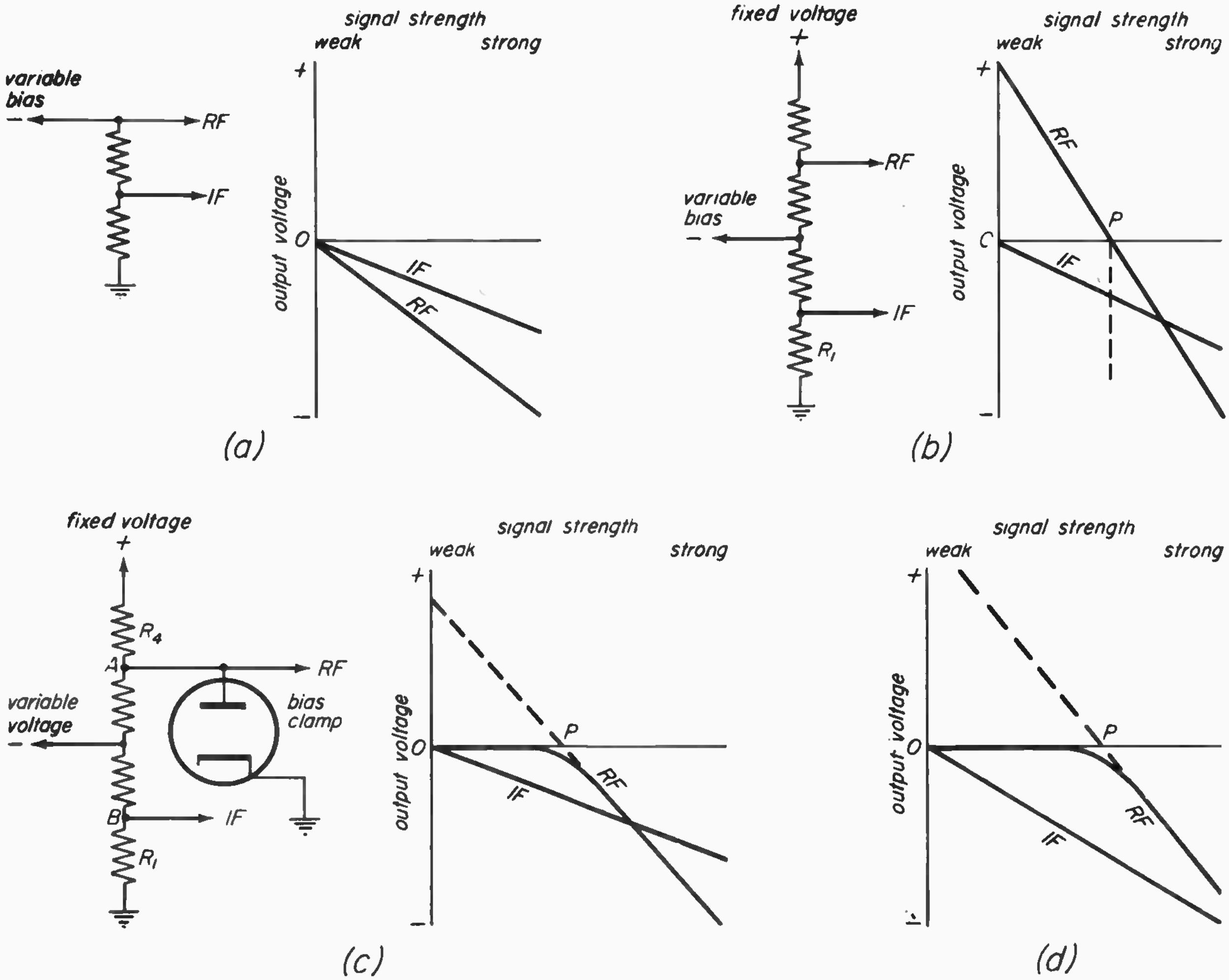

Fig. 32-26

R-f Bias Clamp. – Now, let us consider the circuit which accomplishes the proper division of r-f and i-f bias voltage for weak and strong signals. In the first place the *source* of this bias voltage may be either an AGC circuit or a manual picture control. It makes no difference which. The circuit we are considering only has to divide the available voltage properly between the r-f and i-f stages.

The simplest divider circuit would be that of Fig. 32-26*a*, which is an ordinary voltage divider with a variable negative input voltage. The graph shown with the circuit illustrates how the r-f and i-f bias would vary with signal strength. When the input voltage is zero, both the r-f and i-f bias voltages are zero. As the input voltage increases (for stronger signals) the r-f bias becomes more negative than the i-f bias. This is as it should be except that the r-f bias should remain zero as the i-f bias increases for weak signals.

Look at the circuit of Fig. 32-26*b*. Here a fixed positive voltage (from the low voltage power supply) is applied in addition to the *variable negative* voltage. When the variable voltage is at some low negative value it cancels the positive voltage across R_1, so that the output for the i-f is zero while the output for the r-f is positive. The r-f bias reaches zero at point P on the graph which represents a certain signal strength. Up until point P the i-f bias has been going more negative while the r-f bias was positive. Now, look at Fig. 32-26*c*. This is the same circuit as *b*, except that the bias clamp diode has been added on the r-f bias line. The bias clamp prevents the r-f bias from ever becoming more positive than zero. When the plate goes positive the diode conducts, shorting the r-f bias line to ground which is always at zero volts. Therefore the r-f bias remains zero where it formerly was positive, up until point P. While the r-f bias is zero, the i-f bias becomes more negative.

The graph at *c* shows the r-f and i-f bias reversing at a strong signal input level. This is accomplished by choosing suitable values of resistance (a large R_4) so that when the variable negative input voltage is large it cancels the positive voltage at point A. The crossover occurs when the voltage at point A (combination positive and negative voltage) is equal to the voltage at point B (both voltages with respect to ground).

The resistor values are sometimes chosen to produce the graph of Fig. 32-26-*d* where no crossover occurs. The type of circuit used depends upon what r-f and i-f tubes are in the receiver.

44 MEGACYCLE I-F

32-8. The intermediate frequency of the receiver is important because this affects many characteristics of the fixed-tuned i-f amplifier, and determines the frequency of the local oscillator, since the oscillator frequency must differ from the carrier frequency of the r-f signal by an amount equal to the intermediate frequency. Originally, TV receivers used 12.75 mc and 8.25 mc for the picture and sound i-f, respectively, but most receivers have used the later values of approximately 25.75 mc and 21.25 mc. The RTMA standard has now been raised to 45.75 mc and 41.25 mc for the picture and sound i-f carrier frequencies because of the advantages of these higher intermediate frequencies. We can call this a 44 mc i-f, which is the center of the band of frequencies passed in the i-f amplifier of a receiver using these intermediate frequencies.

Advantages of the 44 mc i-f, compared to an i-f amplifier centered around 24 mc are:

1. Less interference due to radiation from the oscillator of one TV receiver falling in the range of the r-f tuned circuits of another TV receiver tuned to a higher channel.

2. Less image frequency interference.

3. Less interference from diathermy equipment and industrial electronic equipment, which use frequencies in the 24 mc i-f range but not in the 44 mc i-f range.

4. The higher i-f is more suitable for a receiver for the proposed UHF television channels because of the wider separation in frequency between the local oscillator and the r-f tuned circuits.

Stability of the i-f amplifier is more of a problem with the higher i-f. Lead dress, placement and size of the components and tube capacitances have a greater effect on the operation of the 44 mc i-f amplifier. However, these factors can be taken into account and most receivers today are being made with the 44 mc i-f amplifier.

Table A lists the local oscillator frequencies for a receiver using the 44 mc i-f, where the oscillator operates above the r-f signal frequencies on all channels.

Note that the oscillator frequency is not in any TV channel. Also, any frequency in the FM broadcast band of 88-108 mc cannot be an image frequency.

Table A Local Oscillator Frequencies for 45.75 mc and 41.25 mc I-f.

TV Channel	Osc. Frequency
2	101 mc
3	107 mc
4	113 mc
5	123 mc
6	129 mc
7	221 mc
8	227 mc
9	233 mc
10	239 mc
11	245 mc
12	251 mc
13	257 mc

PICTURE SECOND DETECTOR

32-9. In the block diagram of Fig. 32-1 the block following the i-f amplifiers is the picture second detector. This stage has the function of removing the video information from the i-f carrier, to provide the video signal for the video amplifiers. The picture second detector is essentially a rectifier. A diode tube may be used as the second detector or a germanium diode may be used. Fig. 32-27 shows a picture of a germanium diode. It has the same properties as a diode tube in that it permits current to flow readily in one direction but offers great opposition to current flowing in the opposite direction.

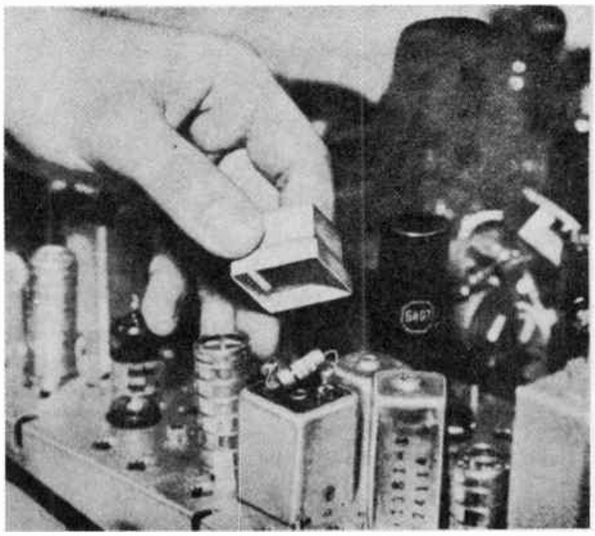

Fig. 32-27

Rectification in the Second Detector. – Fig. 32-28 illustrates a simplified circuit of the picture second detector. R, L and C in parallel are the load of the last i-f amplifier. Cc is the coupling condenser. The output voltage of this last i-f stage is applied to the diode in series with the diode load resistor. When the output signal of the last i-f amplifier makes the

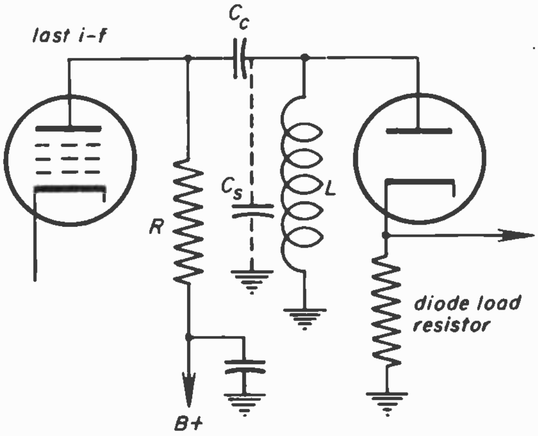

Fig. 32-28

diode plate positive with respect to the diode cathode, the diode passes current. The amount of current that flows depends on how positive the plate of the diode is driven.

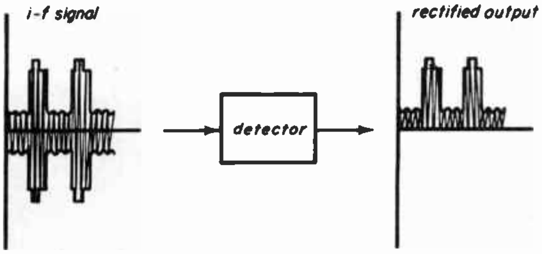

Fig. 32-29

Fig. 32-29 illustrates the diode action. On the positive cycle of the i-f carrier wave the diode passes a pulse of current. The size of the current pulse depends on the amplitude of the i-f carrier cycle; the amplitude of the i-f carrier cycle varies with the picture information being transmitted. Therefore the amount of the diode current varies as the picture information varies. Note that when the diode plate voltage is negative no current flows. However, when the diode plate swings positive a pulse of current is passed by the diode. The amplitudes of the current pulses conform to the original picture information. When this current flows through a resistor, such as the diode load resistor, the rectified diode current produces a voltage of identical waveshape.

Filtering Action of the Diode Load Circuit. – Note that the diode current is in the form of a pulsating d-c. Therefore, the voltage across the diode load resistor is of the same form. The picture information is not contained in the individual r-f cycles of the i-f carrier, but corresponds to the slower variations in the position of the pulse peaks. The undesired i-f carrier cycles are filtered out by the circuit shown in Fig. 32-30. The coils L1 and L2, along with the stray and tube capacities, form a filter circuit. This filter bypasses variations of the i-f carrier. The voltage delivered to the first video amplifier tube has the waveform shown at point A in Fig. 32-30. The detector output, therefore, is the desired video signal voltage. The detector filter removes the i-f carrier signal and increases the video output voltage.

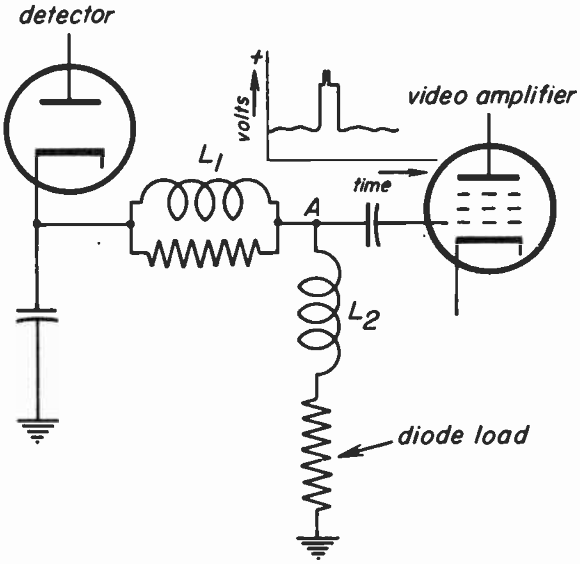

Fig. 32-30

Detector Polarity. – Note that in Fig. 32-30 the blanking and sync pulses are more positive than the whiter picture information. If the detector is reversed, with the output of the last i-f amplifier fed to the diode cathode and the load resistor in the diode plate circuit as shown in Fig. 32-31, the output voltage would be reversed in polarity as shown at point A in Fig. 32-31.

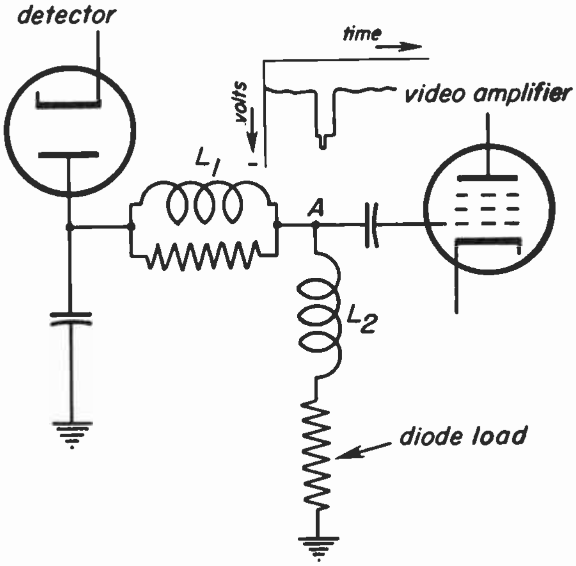

Fig. 32-31

The polarity of the diode in a particular receiver depends on the number of stages of video amplification following the detector and also upon whether the video signal is fed to the kinescope grid or to the kinescope cathode. If the video signal is to be fed to the kinescope grid this signal must arrive at the grid with the sync and blanking pulses extending in the negative voltage direction. Since each video amplifier stage inverts the signal, an odd number of video stages would require a detector output as in Fig. 32-30 to provide negative going sync at the kinescope grid. An even number of video stages would require the detector output of Fig. 32-31.

On the other hand, if the video signal is fed to the kinescope cathode, the signal must arrive at the cathode with sync and blanking in the positive voltage direction. Therefore, if an odd number of stages follow the detector, the detector polarity must be as in Fig. 32-31; if an even number of video amplifier stages are used, the detector must be connected as in Fig. 32-30.

STAGGER-TUNED I-F AMPLIFIER SECTION

32-10. The i-f amplifier of the 630TS receiver is shown schematically in Fig. 32-32. This amplifier is of the stagger-tuned type. There are four i-f amplifier tubes but five plate loads make up the stagger-tuned arrangement because the converter plate circuit must be tuned to the intermediate frequency.

Converter Plate Load. – The load in the converter plate circuit is made up of an L, C, and R in parallel. The inductance is the primary side of the converter plate transformer T2. The resistance is R115. The capacitance is not shown since no physical condenser is used. The stray wiring capacity and the tube capacities make up C. C18 is the coupling condenser that blocks the d-c but permits the signal to pass to the grid of the first i-f amplifier tube.

Sound Takeoff Trap. – The secondary side of the converter transformer is an associated sound trap. It is tuned to the sound i-f which in this case is 21.25 mc. Note that one side of the trap inductance is grounded and that a tap is taken off this inductance and connected to the grid of the first sound i-f amplifier. The coil is slug-tuned and resonates with C16 at 21.25 mc.

1st I-f Amplifier. – The plate load of this stage is made up of the primary side of T103 in parallel with R120. Again the tuning capacity is the stray and tube capacities. C116 is the coupling condenser. R120 is the damping resistor and its value is critical since it determines the bandwidth and gain of the stage. The secondary side of T103 is the adjacent sound trap. It is tuned to 27.25 mc. This trap is of the absorption type.

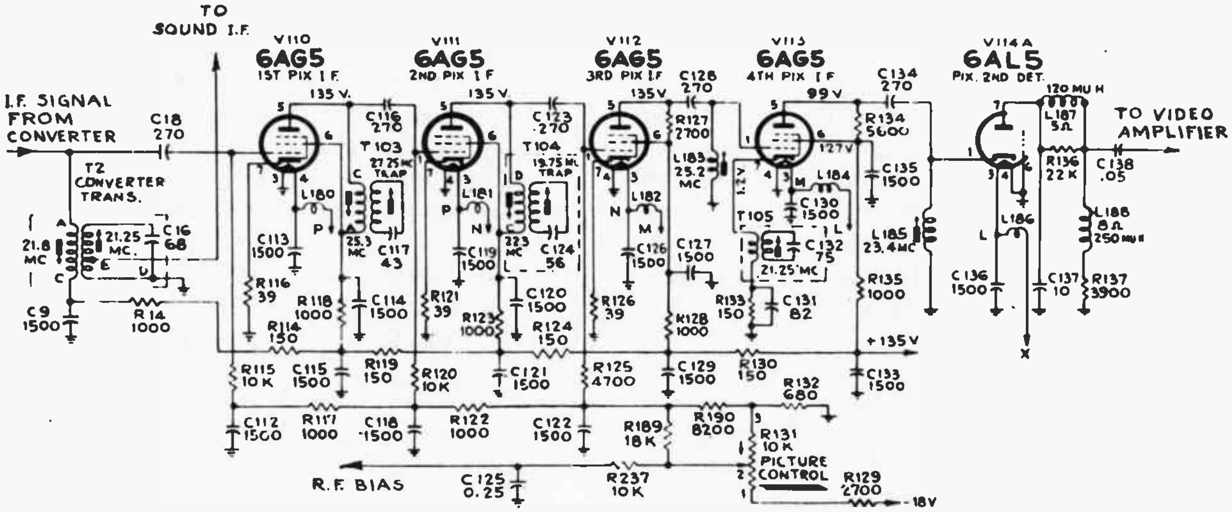

Fig. 32-32

2nd I-f Amplifier. – Here the primary side of T104 is the inductive branch of the plate load while the damping resistor is R125. Note that R125 is a much smaller value than the two previous damping resistors, R120 and R115. This indicates that this stage has a broader response or greater bandwidth than either of the two previous stages. C123 is the coupling condenser. The secondary side of T104 is the adjacent picture trap. It is tuned to 19.75 mc. Note that the tuning frequency for the plate load is indicated in each stage. The converter load is tuned to 21.8 mc., the 1st i-f load is tuned to 25.3 mc, and this stage is tuned to 22.3 mc.

3rd I-f Amplifier. – Here the damping resistor and the inductance have been reversed. This stage contains no trap. L183 is the inductive branch of the load, R127 is the damping resistor, and C128 is the coupling condenser. This stage, like all of the previous stages, is tuned with stray and tube capacities. It is tuned to a frequency of 25.2 mc.

4th I-f Amplifier. – This is the last i-f stage. It feeds the second detector. The position of the damping resistor and the inductance are the same as in the 3rd i-f stage. L185 is the inductance and R134 is the damping resistor. C134 is the coupling condenser. This stage is tuned to 23.4 mc.

Cathode Trap. – The 4th i-f stage contains a cathode trap tuned to the associated sound i-f. C132 tunes the secondary side of T105 to 21.25 mc. This reflects a large resistance in series with the tube's cathode circuit producing degeneration at the trap frequency. C131 is made series resonant with the primary side of T105 at the frequency to which this stage is tuned–23.4 mc. This eliminates degeneration in the region of 23.4 mc.

Plate Circuit Decoupling. – Each plate circuit has its own individual decoupling filter and in addition there are filter elements in series with the common B supply line. Starting from the converter plate circuit and progressing toward the second detector the individual plate decoupling filters are: converter-R14, C9; 1st I-f – R118, C114; 2nd I-f – R123, C120; 3rd. I-f – R128, C127; 4th I-f – R135, C135, Additional decoupling is provided in the plate circuit by R130, R124, R119, R114, C133, C129, C121, and C115. These elements are in series with the B supply line.

Grid Decoupling. – The 1st, 2nd, and 3rd i-f amplifier grids are returned to a common bias point. Therefore, these grids are decoupled by R117, R122, C112, C118, and C122.

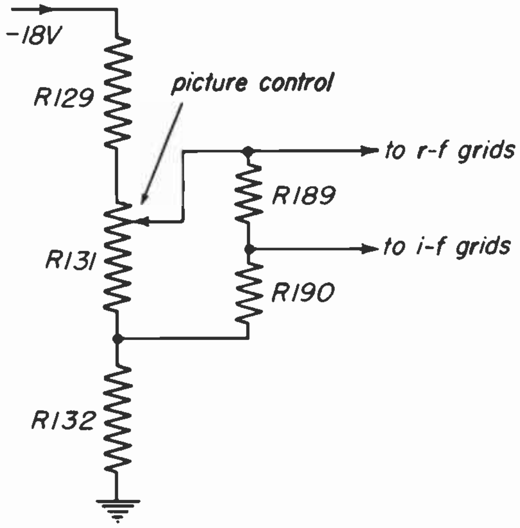

Fig. 32-33

Gain Control Circuit. – Fig. 32-33 shows the 630TS gain control circuit redrawn. R129, 131, and 132 form a voltage divider between -18 volts and ground. R131 is a potentiometer. The voltage at the potentiometer arm depends on its position and varies from -1 volts at the ground end of the potentiometer to about -14 volts at the high end. The voltage on the potentiometer arm is not applied directly as bias to the i-f amplifier tubes. This voltage is reduced by the voltage divider R189, R190. This always makes the i-f bias less than the voltage between the potentiometer arm and ground. The voltage at the potentiometer arm is used to bias the r-f amplifiers. The circuit keeps the gain of the r-f amplifiers high until the i-f gain has been reduced to a certain point. When this point is reached the bias on the r-f amplifiers is made to increase rapidly and overtake the bias on the i-f amplifiers. For small input signals with the receiver running at high gain, the i-f bias is larger than the r-f bias. However, with large input signals and the receiver running at lower gain, the r-f bias exceeds the i-f bias. This results in the best signal-to-noise ratio and therefore a high quality picture.

Picture Detector. – One half of a 6AL5 double diode is used as the picture second detector. The diode load resistor is R137. The remaining components, L187, L188, R136, and C137, form a filter network to eliminate the high frequency rectified carrier pulses from the detector output and at the same time preserve the high frequency components of the picture signal. Also, C137 increases the video voltage output slightly. C138 allows the video signal to pass to the grid of the first video amplifier but blocks the d-c component of the detector output. Note that in this stage, as in all the previous i-f stages, filament circuit decoupling is used. This decoupling consists of a bypass condenser from the ungrounded side of the filament to ground and an r-f choke in series with the ungrounded filament lead.

DOUBLE-TUNED AND STAGGER-TUNED I-F SECTION

32-11. – The i-f amplifier shown in Fig. 32-34 consists of one overcoupled double-tuned stage followed by four single-tuned circuits that are staggered to provide the desired overall response. There are four i-f amplifier tubes but with the converter output, five i-f plate load circuits are used.

Converter Plate Load. – This consists of the transformer T1 link coupled to the 1st picture i-f transformer T101. The link coupling reduces the amount of oscillator voltage radiation caused by direct coupling to the main chassis. The combination of T1 and T101 results in a response identical to what would be obtained by the use of a double tuned, overcoupled transformer without any link. An absorption trap is included in T101. This trap is tuned to the adjacent picture carrier frequency of 19.75 mc. R6 across the primary of T1, and R101 across the secondary of T101, are the damping resistors for the double-tuned transformer. These resistors have a marked effect on the shape of the response of this stage.

1st I-F Amplifier Stage. – The plate load of this stage is the single tuned circuit formed by the primary side of T102 and the stray and tube capacity. This tuned circuit is damped by R104. C106 is the coupling condenser. The secondary of T102 tunes to the adjacent sound at 27.25 mc. The plate load of this stage is tuned to 25.8 mc.

2nd Picture I-f Amplifier Stage. – The primary side of T103 with the stray and tube capacities tune to 21.9 mc. R110 is the damping resistor. C111 is the coupling condenser and its value is considerably less than in the preceding stages. Note that a choke, L119, is used

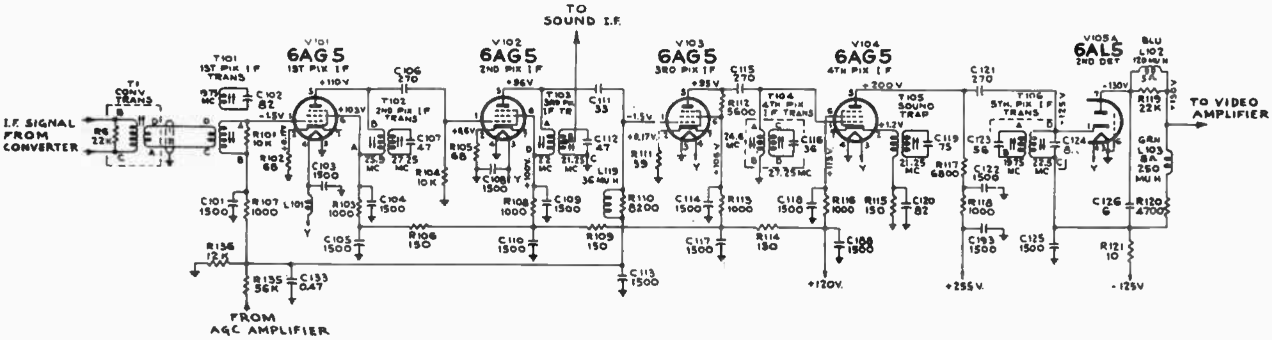

Fig. 32-34

to shunt the damping resistor. This choke along with the reduced value of coupling condenser assures a short time constant in the grid circuit of the 3rd i-f amplifier. If a large noise pulse were to come in on the signal and drive the grid of the 3rd i-f stage positive, C111 could charge very rapidly through the grid-cathode conduction of the 3rd stage. When the noise pulse passed, the condenser would now start to discharge through the external grid return resistor. Until C111 discharged, the bias on the grid of the 3rd stage, due to the charge on C111, could be great enough to interfere with normal operation of this stage. To avoid this difficulty, the size of C111 is small and the damping resistor is shunted with the choke. This permits a very rapid discharge of C111.

Sound Takeoff Trap. – The secondary side of T103 is the sound takeoff trap. C112 is used to tune the secondary to the sound i-f carrier frequency of 21.25 mc. The grid of the 1st i-f amplifier is tapped into the secondary coil. This trap is of the absorption type.

3rd I-f Amplifier Stage. – Here the inductance and the damping resistor are interchanged in position. The primary side of T104 tunes with the tube and stray capacity to a frequency to 24.6 mc, The damping resistor is R112 and C115 is the coupling condenser. The secondary side of T104 is an adjacent sound trap of the absorption type similar to the trap in the plate of the 1st picture i-f amplifier. This trap circuit is resonant at 27.25 mc.

4th I-f Amplifier Stage. – This stage, like the three previous stages is single-tuned. Here the inductance between the terminals C and D of T106 tunes with the tube and stray capacity plus C124. This circuit is resonant at a frequency of 22.4 mc. The damping resistor is R117 in the plate lead of the amplifier tube. C121 is the coupling condenser. The inductance between terminals A and B of T104 is tuned with C123 to a frequency of 19.75 mc. This circuit is an adjacent picture trap similar to that found in the grid circuit of the 1st picture i-f amplifier.

Cathode Trap. – The secondary side of T105 in the cathode lead of the 4th picture i-f amplifier forms a cathode trap tuned to the associated sound i-f of 21.25 mc. The action is the same as that of the cathode trap in the 630TS i-f circuits previously described.

Plate Circuit Decoupling. – The individual stage decoupling filters are as follows: Converter–R5,C7;1st i-f–R103, C104; 2nd i-f – R108, C109; 3rd i-f – R113, C114; 4th i-f – R118, C112.

Grid Circuit Decoupling. – The grids of the 2nd picture i-f amplifier tube and the 4th picture i-f amplifier tube are returned directly to ground. Since these grids do not go back to a point that is common to another stage, no decoupling is necessary. However the grid of the 1st i-f amplifier tube is decoupled from the grid of the 3rd i-f amplifier tube. The decoupling network in the 1st stage consists of R107 and C101. C113 in the grid of the 3rd stage acts as the signal return path for this grid circuit. The grids of the 1st and 3rd stages are returned to the Automatic Gain Control voltage which appears at the plate of V107A. This AGC voltage supplies the necessary bias voltage to these stages.

Picture Second Detector Circuit. – The output of the 4th i-f amplifier is fed into the picture second detector. The detector polarity here is as illustrated in Fig. 32-31. The signal is fed to the diode cathode and the load is R120 in the diode plate circuit. This arrangement results in a detector output such that sync and blanking are in the negative voltage direction. Since two stages of video amplification follow the detector, the phase of the signal is inverted twice, arriving at the kinescope grid in the same phase as it appears at the detector output. As the signal is fed to the grid of the kinescope it is necessary for the darker parts of the video signal to make the kinescope grid more negative and this condition is fulfilled. C126, L103, L102, R213, and the grid resistor of the video amplifier are all part of the detector filter network. R120 and C125 isolate the detector circuit from the -125 volt power supply point.

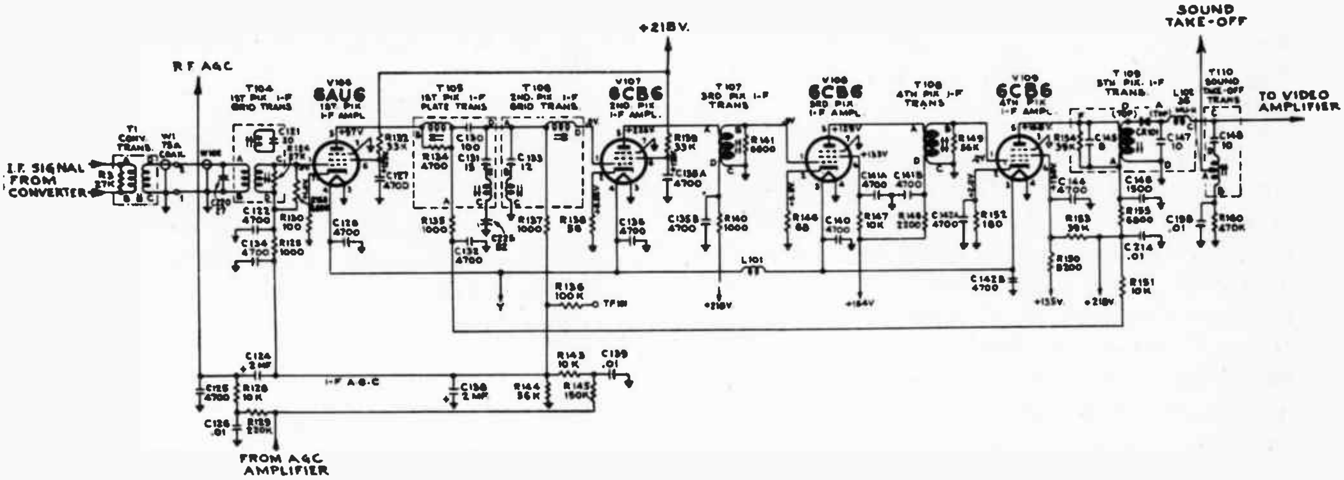

Fig. 32-35

INTERCARRIER I-F CIRCUIT

32-12. – This i-f amplifier is of the intercarrier type and therefore amplifies both the sound and the picture signals. The intermediate frequency used in the amplifier is considerably higher than in the previously discussed circuits. Here the picture i-f carrier is 45.75 mc. and the sound i-f carrier is 41.25 mc. Bifilar coils are used in the plate circuit of the 2nd, 3rd, and 4th i-f stages, eliminating the need for coupling condensers and therefore eliminating noise difficulties of the type associated with long time constants in the grid circuit. The 6AL5 vacuum tube diode used previously as the picture detector has been replaced here by a germanium type diode detector.

Converter Plate Circuit. – The transformer T1 is link coupled to T104 producing the effect of a double-tuned circuit. R3 and R124 are the damping resistors. An absorption trap is included in T104, tuned to the adjacent picture i-f carrier of 39.75 mc.

1st I-f Amplifier. – T105 and T106 comprise a bandpass filter producing a response characteristic similar to that required of the overall i-f amplifier. Fig. 32-36*a* shows the gain – frequency curve of the first stage by itself, and *b* shows the overall i-f response. C131 in series with the coil between terminals C and E of T105 form a resonant circuit tuned to the associated sound frequency of 41.25 mc. Therefore terminals C and D of T105 are practically short circuited for this frequency. This reduces the amount of sound signal passed by this stage as can be observed on the response curves in Fig. 32-36. It is necessary to keep the amount of sound signal passed through the i-f amplifier of an intercarrier type receiver to a low value in order to avoid "sync buzz" or "intercarrier buzz". T106 contains a similar series resonant circuit composed of C133 and the coil between the terminals B and C. This circuit is tuned to the adjacent channel sound i-f carrier of 47.25 mc. Therefore, terminals A and C of T106 are effectively short circuited for the adjacent channel sound. This can be verified by reference to the curves in Fig. 32-36.

The coils shown in the horizontal position in both T105 and T106 are tuned

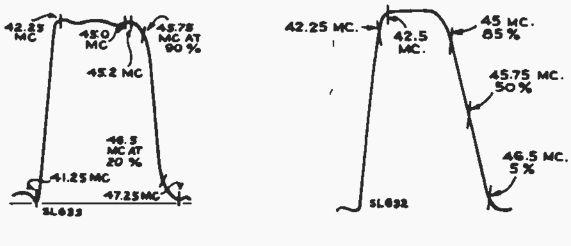

(a) (b)

Fig. 32-36

to produce the desired flat response. C130 is a coupling condenser. R135 and R137 are similar in function to the damping resistors used in the converter plate circuit.

2nd I-f Amplifier Stage. – The 2nd, 3rd, and 4th i-f amplifier stages are combined in a stagger-tuned system. T107 in the plate of the 2nd i-f amplifier is a bifilar coil. Such a coil may be thought of as a transformer with almost unity coupling. In action, a bifilar coil is much the same as a coil with one winding of the type used in the previous receivers. No coupling condenser is required since the signal is transferred by the transformer action of the bifilar coil while the d-c voltage is blocked. T107 is tuned to 41.8 mc. R141 is the damping resistor.

3rd I-f Amplifier Stage. – This stage is almost identical to the second stage. It is tuned to 45.5 mc. Here the damping resistor is R149.

4th I-f Amplifier Stage. – This stage feeds the picture detector through T109. T109 is tuned to a frequency of 43.7 mc. R154 and C145 are for the purpose of making the tuning and damping of the circuit less dependent on the exact characteristics of the germanium diode.

Second Detector. – The detector is CR101, a germanium diode. The diode load resistor is R157. The filter network is more complex than previously because of the need to remove the sound signal from the picture channel at this point. The filter is composed of L102, L103, and L113. T110 is the sound takeoff transformer, which has a series-tuned trap in shunt with the load to resonate at the associated sound frequency.

Screen Resistors and Condensers. – Each stage contains a screen dropping resistor and bypass condenser as follows: 1st i-f – C127, C129, R132; 2nd i-f – C135A, R139; 3rd i-f – C141A, R147; 4th i-f – C144, R153.

Plate Decoupling. – The components used for plate decoupling in the individual stages are as follows: 1st i-f – C132; 2nd i-f – C135B, R140; 3rd i-f – C141B, R148; 4th i-f – C146, R155, and C214.

Grid Decoupling Circuits. – The grids of the 3rd and 4th i-f stages return directly to ground and therefore require no decoupling. However the grids of the 1st and 2nd i-f stages return to the AGC voltage and are decoupled as follows: 1st i-f – R125, C122, C135; 2nd i-f – returns direct to AGC line.

PART II - TROUBLESHOOTING THE PICTURE I-F AND DETECTOR STAGES

TROUBLES AND TESTS IN THE I-F AMPLIFIER

32-13. – Troubleshooting the picture i-f amplifiers follows the basic procedure for troubleshooting amplifiers as outlined in Lesson 26. This procedure is: (1) Localizing to a section, (2) Finding the defective component. Therefore, the first thing to do is localize the trouble to the picture i-f section, if this section is causing the trouble. We assume that the raster is normal, but something is wrong with the picture. Generally speaking, one of the following may be wrong with the picture:

(1) No picture at all, Fig. 32-37*a* (raster only)
(2) Weak picture – no snow, Fig. 32-37*b*
(3) Smeary picture, Fig. 32-37*c*
(4) Flashes in the picture
(5) Overloaded picture, Fig. 32-37*d*.
(6) Sound bars in the picture, Fig. 32-37*e*.

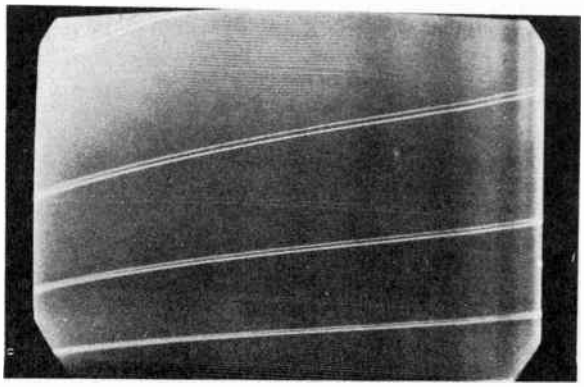

(a) No picture - Raster only

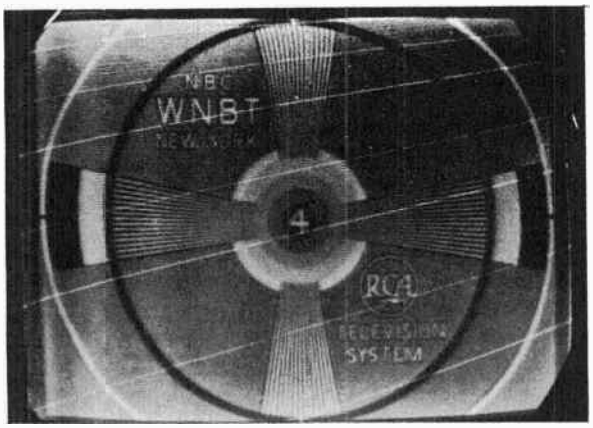

(b) Weak picture - No snow

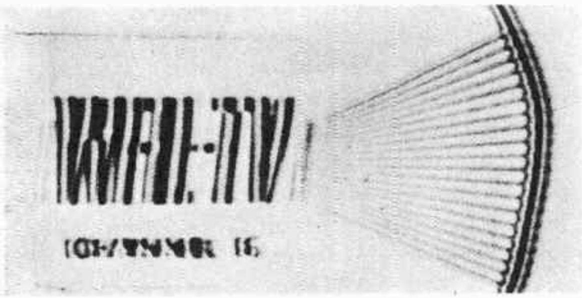

(c) Smeary picture

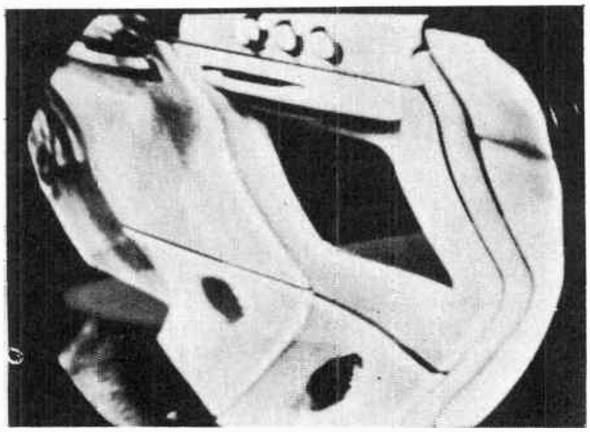

(d) Overloaded picture

(e) Sound Bars in picture

Fig. 32-37

NOTE: In many sets, a defect in the picture i-f section not only affects the picture but may also affect the sound.

Some of the troubles mentioned might be caused by a defect in either the r-f, picture i-f, or video amplifier section. To localize the trouble to one of these sections, certain tests are available. These are:

1. **Snow**
2. **Picture second detector voltage**
3. **Sound**
4. **Jumping the video amplifier**
5. **Signal injection in the video section**

The presence or absence of snow is a test to determine if the trouble is in the r-f section. The presence or absence of picture second detector voltage is a test of the i-f amplifier itself which determines if the signal has been passed by this section. The presence or absence of sound is a test which shows if the signal has reached the sound takeoff point. Jumping the video amplifier and signal injection in the video amplifier, are tests which determine if the trouble is in the video amplifier section.

Of course, any tests which eliminate the video amplifier section, and r-f section as the cause of one of the troubles previously listed leaves only the picture i-f section as the part of the receiver in which the defect may be localized. Those tests which apply specifically to the picture i-f section are explained in detail in this lesson as the occasion arises. Other tests mentioned may be more applicable to troubleshooting other sections of the receiver and will receive a fuller treatment in other lessons. For example the test involving signal injection will be covered in detail in the lesson on video amplifiers.

LOCALIZING TO THE PICTURE I-F SECTION.

32-14. As we said before, some of the troubles mentioned might be caused by either the picture i-f amplifier section or the video amplifier section. In this case it is necessary to localize the trouble to see if it is actually within the picture i-f section. Some of these troubles may also occur due to defects in the antenna or r-f sections. For example, a condition of "no picture" might be caused by a defect in the antenna, r-f, picture i-f, or video amplifier section. An important clue to assist in localization is to look for *snow* in the raster. If you have no picture but lots of snow, the trouble probably precedes the converter. This is because snow is *generated* in the converter.

No Picture. – If you have no picture, but at the same time do not have an excessive amount of snow, the trouble generally follows the converter. Now, assuming that we have determined the trouble to follow the converter, it could either be in the picture i-f section or video amplifier section. To localize to either of these two sections, measure the d-c voltage at the output of the second detector. Some small reading is normally present due to the rectification of noise. To make sure you are reading ***signal*** d-c voltage, vary the fine tuning control or the channel switch to see if the reading changes. If it does, it's a pretty safe bet you are reading rectified signal voltage. In the event that you *do* get a signal d-c voltage reading and it compares favorably with that of a normal receiver, the trouble is in the video amplifier section (described in the next lesson). If you don't get the reading, the trouble is in the picture i-f section. This principle is illustrated in Fig. 32-38.

A similar localizing process may be followed when the picture is weak rather than completely absent.

Weak Picture – No Snow. – If a weak picture is present without snow, but the raster is normal, the trouble probably follows the converter stage. The absence of snow in the raster tells us this because the amount of snow in the picture signal is determined at the converter. Since this trouble follows the converter, it could be either in the picture i-f amplifier section or in the video amplifier section.

One way of isolating this trouble to either section is by measuring the picture second detector d-c output voltage as previously described. This presupposes a knowledge of the normal reading for the particular type set involved as well as the location and channel. However, if the d-c output voltage is appreciably less than "normal", the trouble lies with the picture i-f section. It is difficult to say what a "normal" d-c output voltage would be, but a typical reading ranges from about 3 to 5 volts. The best way to determine the "normal" detector output voltage is to measure it in several good sets of the same type.

Sound Takeoff. – In many receivers the sound is tapped off following the first or second picture i-f amplifier. In such a receiver, if we have normal sound but no picture, the trouble must follow the sound takeoff point. This localizes the trouble to the picture i-f stages following the sound takeoff as in Fig. 32-39.

In receivers where the sound is tapped off as shown in Fig. 32-39, a condition of no sound and no picture (without snow) could be the fault of the first or second picture i-f amplifiers. If this is caused by tube trouble, you can interchange the first and second i-f tubes with the third and fourth. If sound returns but there is still no picture, one of the tubes now in the third or fourth positions is bad. Let's

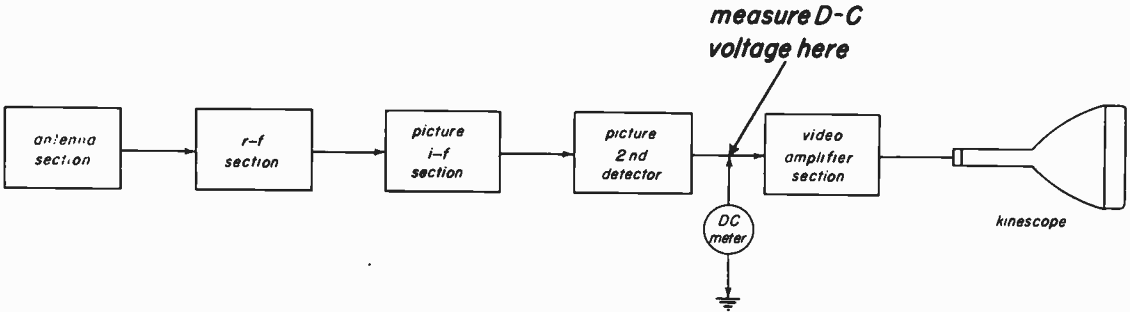

Fig. 32-38

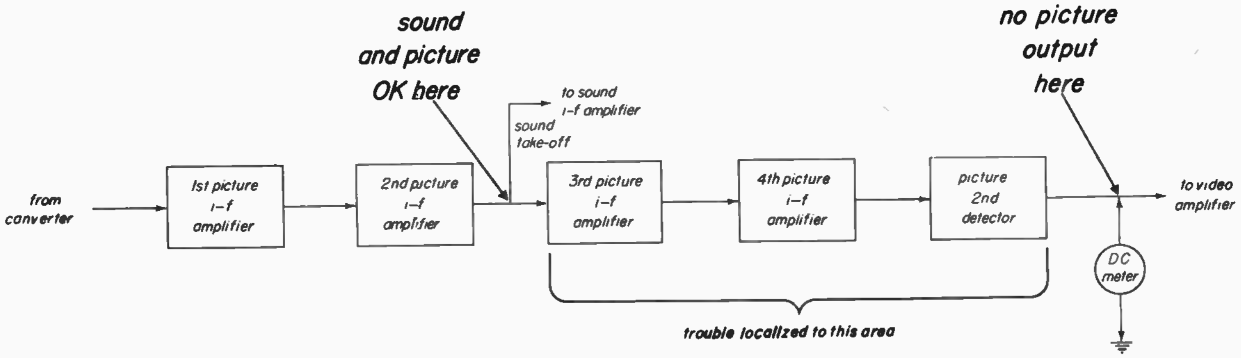

Fig. 32-39

take an example of this. Suppose the first picture i-f tube is bad, and we swap this with the third picture i-f tube, on the other side of the sound takeoff. We now have a good tube in the first picture i-f stage and will get normal sound. However, the bad tube is now in the third picture i-f stage and will *not* amplify picture information. Thus, in a case like this, the bad tube is quickly identified.

In some receivers, the sound is tapped off immediately following the converter. In a set of this type, the localization, when we have sound but no picture, is somewhat less restricted as indicated in Fig. 32-40.

Because we hear normal sound in this set, it is obvious that the signal is reaching at least to the sound takeoff point. Since we cannot measure picture d-c voltage at the output of the picture second detector, the trouble is localized to some point between the sound takeoff and the output of the picture second detector.

In intercarrier sets, the sound is tapped off following the picture second detector. In these sets, if we have sound, but no picture the trouble is likely to be in the video amplifier or kinescope circuits, rather than in the picture i-f circuits.

Picture Second Detector Voltage. – One of the tests used to isolate troubles to the picture i-f section is to measure the picture second detector voltage. The voltage referred to here is the d-c rectified voltage appearing at the output of the detector. This is due to rectification of noise and signal voltages applied to the input of the detector.

It might be wondered at this time how we can measure a voltage with a d-c meter at the output of the detector, when we have a fluctuating output voltage. The reason for this is that although the voltage is fluctuating, it is *not alternating;* that is it always has only *one polarity*. It is pulsating d-c. In the case shown in Fig. 32-41 the polarity is always *negative*.

A d-c meter placed at the plate of the picture second detector averages out the

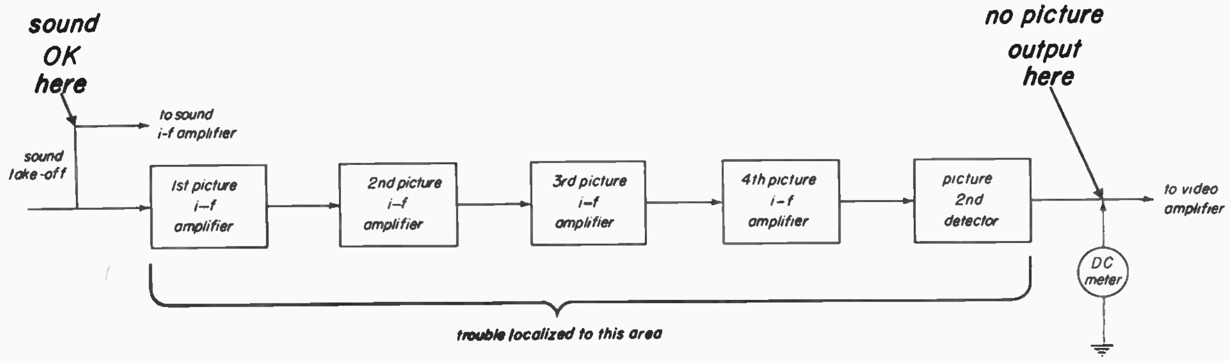

Fig. 32-40

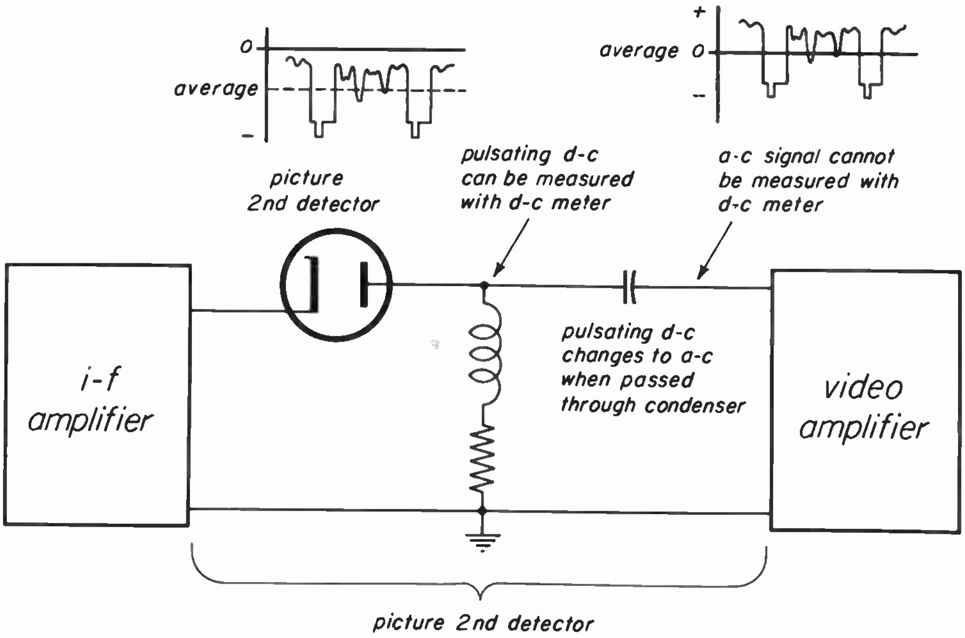

Fig. 32-41

fluctuations of negative voltage, with the result that the meter reads some steady negative voltage. This is only possible at the rectifier output. As shown in Fig. 32-41, if the signal passes through a coupling condenser, the signal becomes *a-c*. The average of an a-c wave is *zero* so we cannot measure the signal with a d-c meter after it passes through the coupling condenser.

A simplified diagram of a picture second detector is shown in Fig. 32-42.

Note that in a rectifier there are no d-c applied operating voltages. Therefore, the presence of d-c in the output circuit is due solely to the rectification of input signals (including noise). It is this factor which makes measuring the detector voltage such a good test. The actual magni-

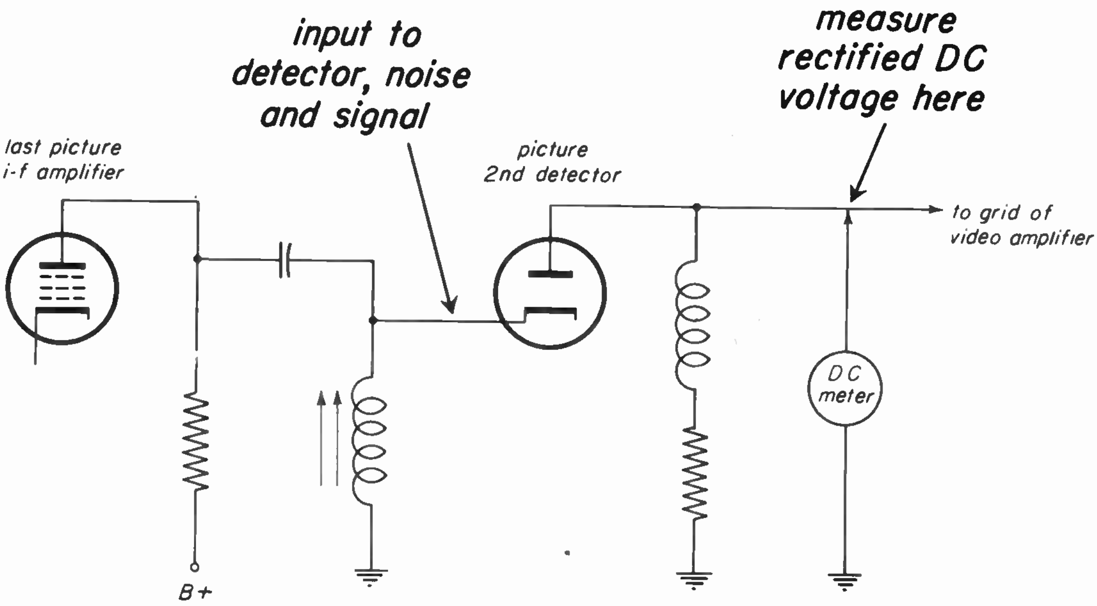

Fig. 32-42

tude of the measured voltage may tell you whether or not you are getting correct amplification through the picture i-f section.

If you get a d-c output voltage which is "normal" for the particular set, the signal must be going through the picture i-f amplifier properly. In this case the trouble is in the video amplifier section. If the second detector voltage is low, in the case of a weak picture without snow, the trouble is someplace in the picture i-f section. If you get no detector voltage at all, but you do get sound, the trouble is between the sound takeoff and the picture second detector. Thus, correct interpretation of the picture second detector voltage, with or without tests, helps to isolate troubles.

In some receivers the output of the second detector may be returned to B minus instead of ground as shown here:

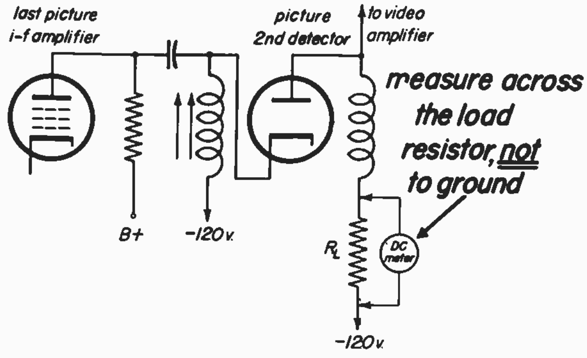

Fig. 32-43

In these sets the second detector voltage should *not* be measured to ground, but directly across the detector load resistor. This is shown in the figure. The reason for this becomes obvious when we examine the two scales which would be used in a typical voltmeter. These are the 250 volt and the 10 volt scales. If we did measure the detector output voltage to ground, the 250 volt scale would have to be used. In this case a residual voltage of 120 volts would always appear on the meter. Assuming the rectified signal voltage to have a value of 3 volts, you can appreciate that it might be very difficult to read a difference of only 3 volts on the 250 volt scale. This is shown here:

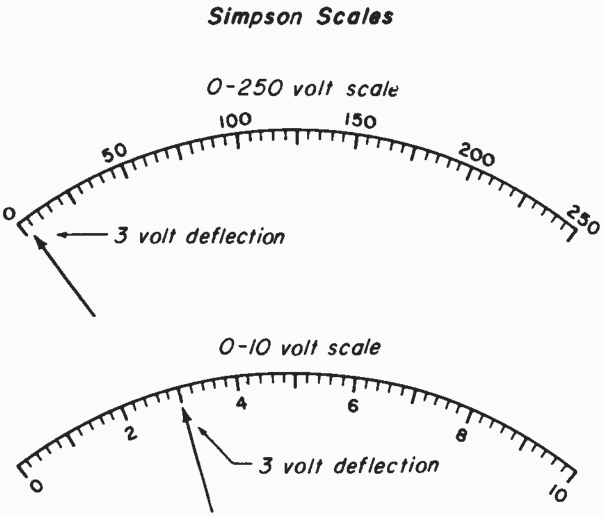

Fig. 32-44

On the other hand if you read the output voltage only across the detector load resistor, the ten volt scale may be used. Note that 3 volts takes almost 1/3 of the scale and so is easily read on this scale.

Clicking the Tubes. – It is necessary to locate the defective *stage* in the picture i-f amplifier section. Because of the high frequencies involved signal injection is only possible with the use of a suitable signal generator. Since the serviceman making a house call does not carry such equipment with him, other methods must be used. Of course, the first thing to do is to make certain all the tubes are good in the i-f section. This is most conveniently done by substitution. Assuming the tubes to be O.K. it is sometimes possible to perform further localization by the tube "clicking" method described in previous lessons. Briefly, this works as follows: Starting at the picture second detector, plug the tube in and out several times and look for a distinct flashing on the screen of the kinescope. If you get it, the stage you are working with is probably O.K. Move back one stage towards the antenna and repeat. Continue until you reach a stage where "clicking" the tube does not produce a strong flashing effect. If you reach such a condition, the tube which does not produce the flashing is probably the defective stage. This stage can then be checked with a meter for voltages and resistances.

SMEARY PICTURE

32-15. – It is possible that a smeared picture could be the result of a defect in either the picture i-f section or the video amplifier section. In general, smear is caused by some defect which changes the frequency response of either of the above mentioned sections. Since either section can cause smear, it is necessary to be able to localize the cause of smear to one of these sections. Localization of smear may be accomplished as follows: Take a wire jumper in series with a condenser (.05 microfarad or so) and connect the output of the picture detector directly to the signal element (grid or cathode as the case may be) of the kinescope tube. In so doing it is necessary to disable the video amplifier, usually by taking out the video tube or tubes. In the case of direct-coupled video amplifiers in some receivers certain precautions must be observed when pulling out the video amplifier tubes. For instance, in receivers of the 8T241 type, when you pull out the video amplifier tube, the AGC bias may increase to such an extent as to cut off the i-f amplifier. If this happens, both picture and sound will be lost. To remedy this, it is only necessary to readjust the AGC threshold control until normal sound returns at which point the picture will also come through to the detector. These precautions are only required in those receivers in which the AGC voltage is tapped off one of the d-c video amplifiers.

After we have disabled the video amplifier (and reset the AGC control if required), we examine the picture on the kinescope. If no smear appears in the picture, the video amplifier is at fault and the picture i-f section is O.K. On the other hand if we now get a smeared picture, the trouble is in the picture i-f section

Still another method may sometimes be effective in localizing the cause of smear. This is to vary the fine tuning control and observe the effect on the smear. If the smear does not change, the cause is not in the picture i-f amplifier. On the other hand, if varying the fine tuning control also changes the smear, it's a pretty good bet that the trouble is in the picture i-f section.

OVERLOADED PICTURE

32-16. – Keep in mind the fact that every amplifier tube has a certain operating range within which an undistorted output may be obtained for a certain input signal. If this "normal" operating range is exceeded, the output will no longer be a faithful reproduction of the input, but will be distorted. For our purposes, we may consider that the type of distortion which occurs is a *compression* of the signal (described earlier). This compression effect is commonly known as overloading and its effect on the picture can be seen in Fig. 32-23. Overloading appears when the signal exceeds the operating range of the amplifier tube. This operating range may be exceeded in either of two general ways:

1. By applying a signal of excessive amplitude to an amplifier.
2. By some factor which actually reduces the *operating range* of the amplifier.

In the first instance, the signal of excessive amplitude may be caused by one of two things: (a) Excessive antenna signal input to the receiver, or (b) excessive amplification in one or more previous stages developing too high a signal output and therefore supplying too large an input to the amplifier being overloaded. In the case of excessive antenna signal, no defect of the receiver is indicated. There is just too much antenna signal for the receiver to handle. A condition such as this is generally found only fairly close to the transmitting antenna, where the signal strength is very high. The remedy here is to reduce the amount of signal reaching the receiver. This may be done by placing an attenuator pad in the transmission line before it enters the receiver. To localize the trouble to the antenna or receiver in such a case an attenuator pad could be tried to see if the trouble is alleviated in this manner. Another method is to switch to a weak channel and see if this also overloads. If it does, the trouble is probably in the set. If the overloading exists only on one or two channels, some frequency selective attenuator could be used, such as a stub near the receiver terminals. Various sizes and positions would have to be tried to get the desired results. If the overloading exists only on the low channels and not on the high channels another method may be tried. This consists of placing a *paper* condenser about .05 microfarad or so, across the receiver antenna terminals. Several sizes may be tried for optimum effect.

How Picture I-f Defects Cause Overload. – In the case of excessive amplification causing overloading of a following stage, the excessive amplification generally results from a decrease in bias applied to one or more stages. This may result from a defect in the AGC system reducing the bias on several tubes. Or it may result from a decreased bias on only one i-f stage. In the case of only one stage having reduced bias, one way this could happen is by means of a leaky coupling condenser having just the right amount of leakage. How this works may be understood with the aid of this diagram.

Part *a* of Fig. 32-45 shows the conditions as they might exist in a simplified i-f amplifier when the coupling condenser is good and has no leakage. Note that no drop appears across the grid resistor and that the normal bias is minus 5 volts. Now compare this with part *b* of the figure. Here we have an amplifier with a leaky coupling condenser. The amount of leakage in this particular condenser is such that a 5 volt drop appears across the grid resistor. The grid voltage is now 5 minus 5 or zero volts. Thus, the bias has been removed from the amplifier tube. Because of this, its gain will *increase* and overloading may take place in one of the following i-f or video amplifier stages. Of course, this type of trouble may be detected by voltage measurements. The trouble will show up in the bias voltage of the defective stage and, again, in the plate voltage of that stage which will be low, due to excessive plate current, caused in turn by the reduced bias. Not all leaky coupling condensers react in just the exact way we have described. However, this sort of trouble does occur in actual practice and is a definite possibility.

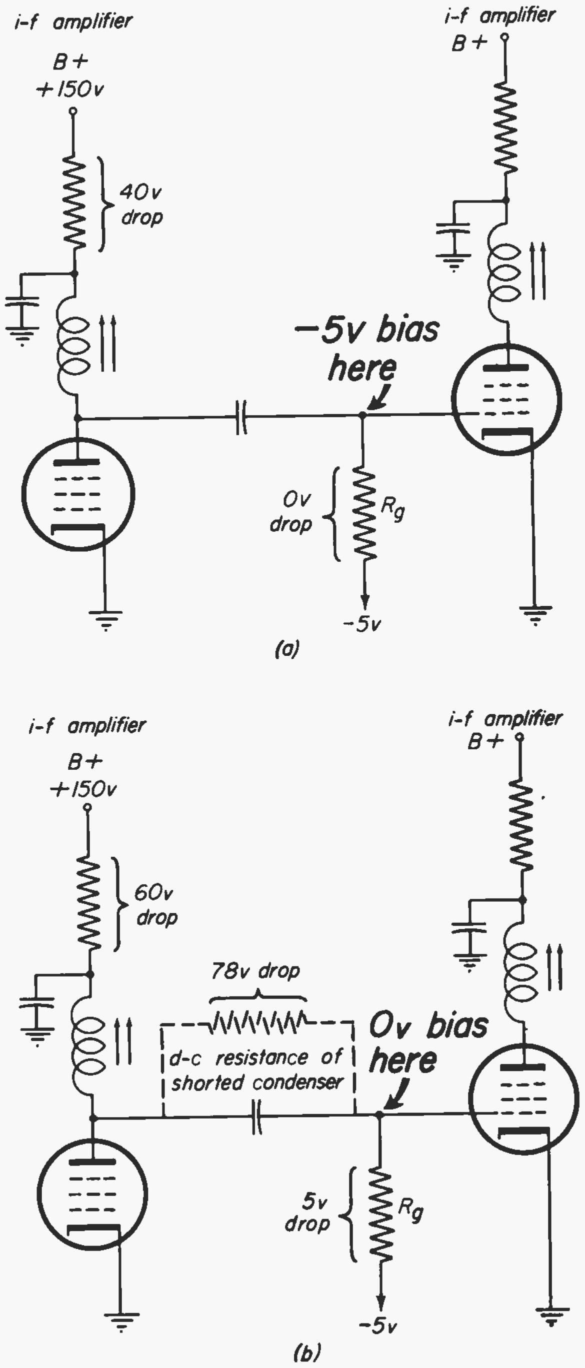

Fig. 32-45

In the previous case, we have a condition where overloading was caused by

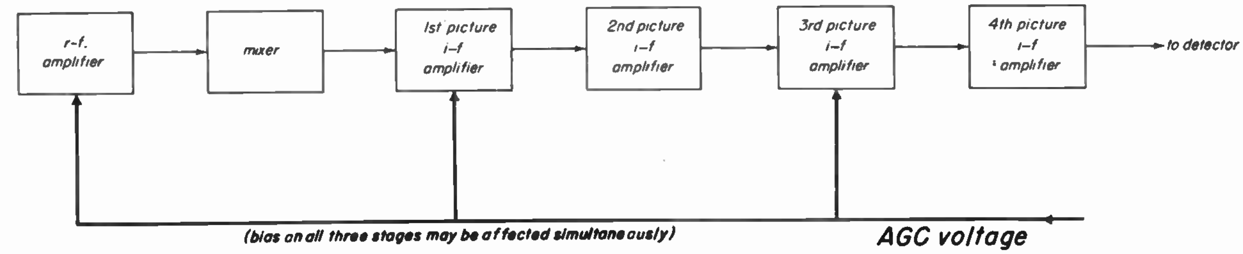

Fig. 32-46

a defect in only one i-f amplifier. A defect in the AGC system, however, may affect several stages in the receiver simultaneously. This is shown in a typical block diagram in Fig. 32-46.

If the AGC system operates improperly, insufficient bias may appear on all three of the stages shown. This increases the gain on all three stages and may cause overloading on some or all channels, depending upon signal strength. Localization may be accomplished in this case by measuring the AGC voltage and comparing it with the "normal" reading for that particular type of set. Another way to localize the trouble is to disable the AGC by injecting manually controlled bias by means of a "bias" box described later on.

Weak Picture Overload. – In sets having AGC, it is possible to have a *weak* overloaded picture (without snow). The best way to see how this can occur is to take a specific example. Suppose that in a set with four picture i-f stages, the fourth stage is defective. It is defective in such a way that the signal passing through it is actually reduced considerably, instead of being amplified. However, all the other stages are operating normally. This situation is illustrated in Fig. 32-47.

Because the signal is attenuated in passing through the fourth i-f stage, the negative bias voltage produced by AGC action is *low* even though we may have normal antenna signal. In this instance, the AGC bias is applied to the r-f amplifier, and the first and third picture i-f amplifiers. Thus, all three of these stages are operating at high gain and overloading may take place in a stage *preceding* the defective stage. The picture on the screen is weak because one stage of amplification is lacking. At the same time the picture is overloaded because compression is taking place in a stage before the dead stage. In localizing this trouble we use the same procedure as when troubleshooting any weak picture without snow. What we have to look for here is one stage which is *attenuating* the signal.

Flashing Picture. – We are referring here to the type of flashing which is similar to that caused by a broken transmis-

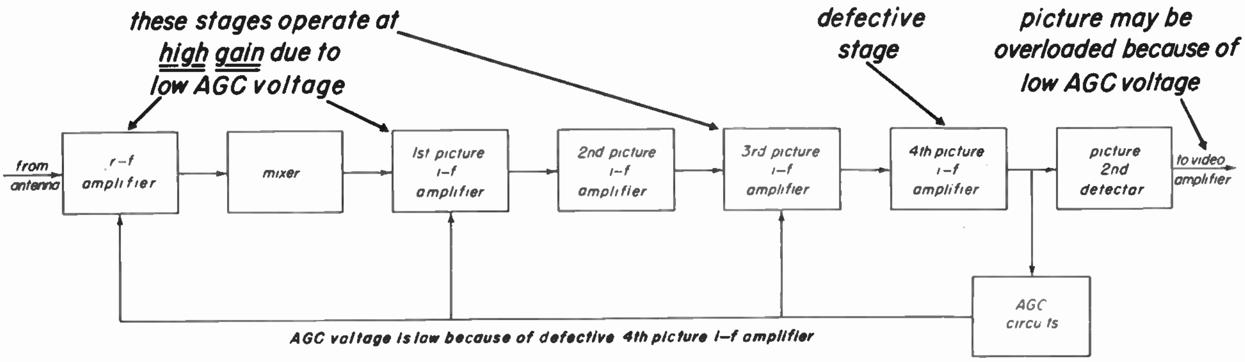

Fig. 32-47

sion line. This type of flashing may be caused in the picture i-f section by a coupling condenser which is intermittently leaky, as shown here:

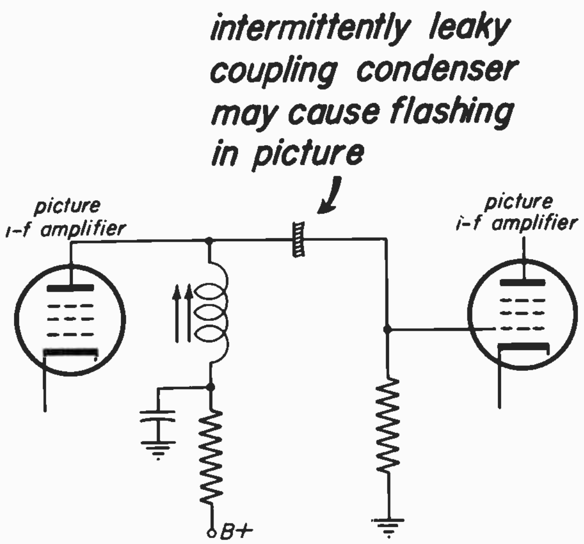

Fig. 32-48

As this condenser momentarily shorts, a positive voltage appears at the grid of the coupled stage. This intermittent, positive grid voltage combines with the picture signal and causes the flashing effect in the pictures. One method of localizing this trouble is to observe if the effect of the flashing also appears in the *sound*. If it does, the fault precedes the sound takeoff point. If not, the fault is after the sound takeoff point. Further localization is made by measuring the grid voltage of each picture i-f stage.

The grid to which the defective condenser is connected will show an intermittent positive going voltage which will intermittently reduce the negative bias voltage on the grid. The grid voltage may actually go positive. Sometimes the defective condenser will act in such a way that it has a fixed minimum value of leakage resistance which fluctuates to produce flashing. In this case a fixed positive voltage will be applied to the grid which changes the grid bias by a fixed amount. In addition to the fixed bias change the positive going "flashing" voltage will appear on the grid. All that is necessary to cause flashing is a fluctuating voltage in the order of a few volts peak amplitude.

Because the flashing voltage is small in amplitude it is desirable to use a low meter scale to detect it. For example, on a 10 volt scale 5 volts of flashing would cause a large deflection of the pointer. Incidentally, we should use a d-c meter to detect the flashing rather than an a-c meter. The flashing is a pulsating d-c voltage. If an a-c meter is used, and it has no blocking condenser, its internal rectifier might not conduct, depending upon how it is connected. Also, the a-c meter could show an erroneous indication by registering stray a-c voltages which might be present as a result of stray coupling.

Sometimes, we are prevented from using a low voltage scale on the d-c meter because a large steady d-c voltage is present where we want to measure the low amplitude flashing. This could happen as a result of the steady leakage of a condenser, or when it is desired to check the flashing on the *plate* side of the coupling condenser where B+ is present. In the case of the last picture i-f, the output side of the coupling condenser is connected to the input of the detector and may be returned to B minus voltage. To make it possible to use a low scale in these instances, a condenser may be connected in series with the meter, as shown in Fig. 32-49.

The condenser (.05 microfarad or so) blocks the steady d-c voltage and only allows the "flashing" voltage to affect the meter. This permits the use of the lowest possible meter scale to make it easier to detect the "flashing" voltage.

The positive leakage voltage and the "flashing" voltage may appear at other grids on the bias distribution line. How this may happen is illustrated in simplified form in Fig. 32-50.

The leaky condenser applies a positive voltage to the grid of V2. However, because of the bias distribution resistors, the other tubes also receive a positive grid voltage. When measuring these grid voltages, some confusion might arise

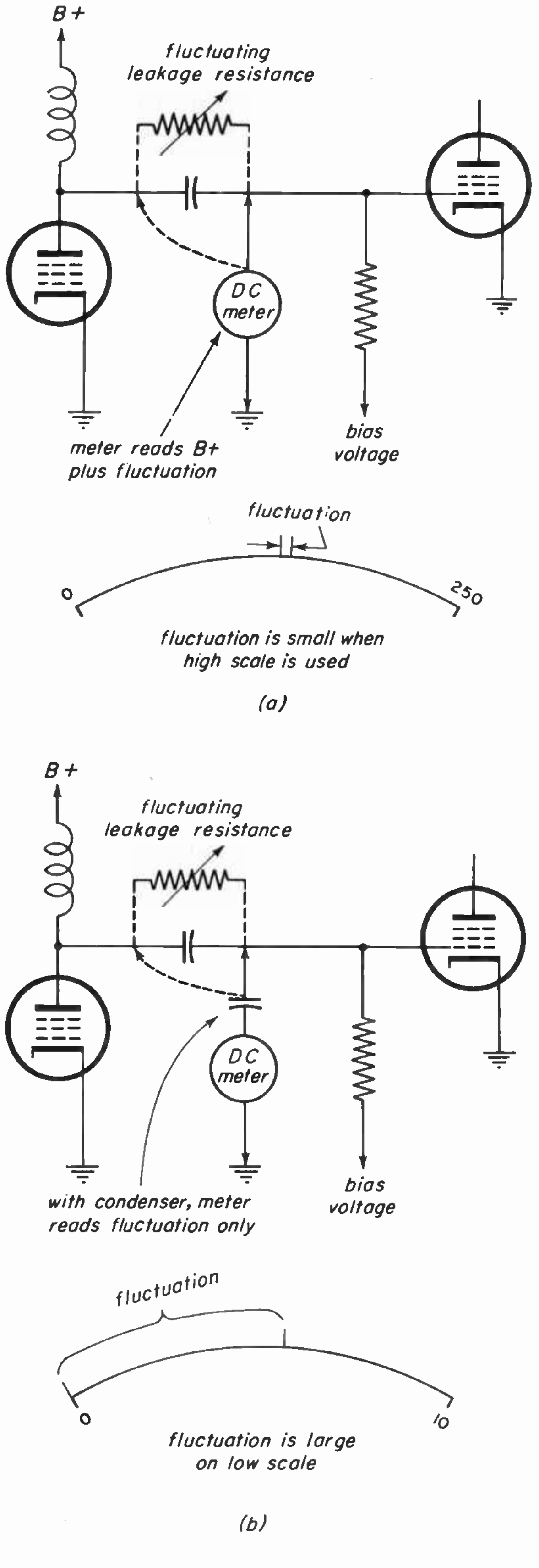

Fig. 32-49

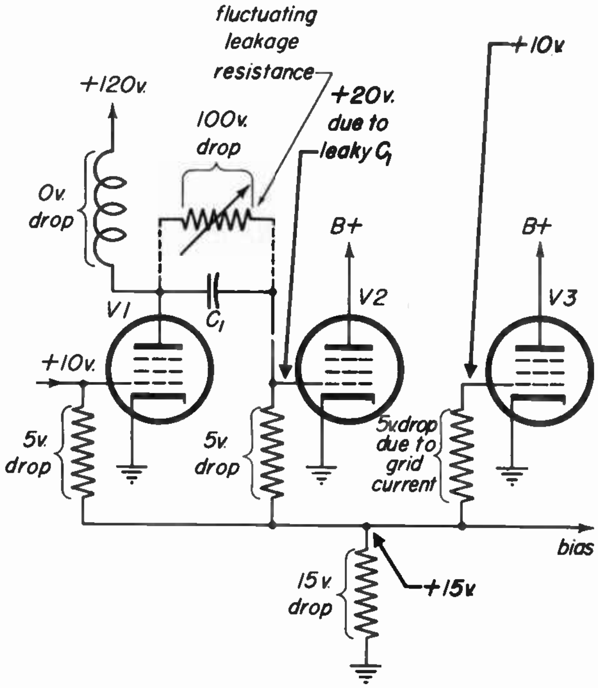

Fig. 32-50

as to exactly where the defective condensor appears. Fortunately, this is not difficult to determine. The leaky condensor causes current to flow, starting from B plus, going through the leaky condensor, grid circuit, decoupling circuits and eventually to ground. This current causes voltage drops in the various circuits such that the grid connected to the defective condensor shows the *highest* positive voltage. This is how you tell which condenser is bad. The other grids will show *lower* positive voltages. So, all you have to do is measure the various grids tied to the bias distribution line and see which one has the highest positive voltage. That one has the defective condenser in its grid.

Bias Box. – Any defect in the picture i-f amplifiers that affect the *amplitude* of the signal will change the AGC voltage and thus the gain of the amplifiers. Under these conditions it is desirable to tell whether the fault actually lies with the AGC system or with the stages controlled by AGC. It is possible to substitute a manually controlled source of bias in place of the AGC bias. To do this it is usually not necessary to actually disable the AGC system as the manually inserted bias will override the AGC. Many servicemen build a simple piece of equipment called a "bias box" for the purpose of inserting manual bias. This consists of one or more small batteries, a potentiometer and switch and a couple of leads with alligator clips at the end. These are mounted in a wood or metal container. A schematic of a bias box looks like this:

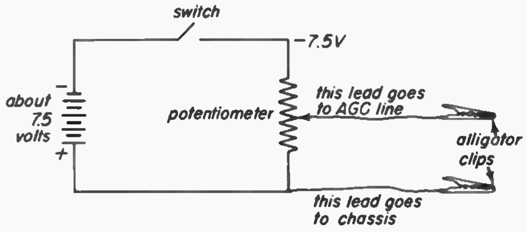

Fig. 32-51

For most sets 7.5 volts will be ample. This may be obtained from a single 7.5 volt battery or five 1.5 volt cells connected in series, whichever is most convenient. In addition to the battery we find a potentiometer. This is not critical and may have a value of 50,000 – 200,000 ohms (any value of resistance that will not draw so much current that the battery will be used up quickly). The purpose of the potentiometer is to tap off the desired bias voltage for the particular set. A switch is included to turn off the battery when the bias box is not in use. This bias box is connected as follows: The *plus* lead connects to the *chassis*. Connect the negative lead (center arm) to the AGC bias line which is common to the i-f controlled stages as shown here in simplified form in Fig. 32-52.

After connections are completed, adjust the potentiometer to get the desired negative bias voltage. This is usually the voltage recommended for alignment and may be found in the service notes. This manually controlled bias overrides the AGC and permits you to align or troubleshoot without the effect of AGC.

LOCALIZING SHORTS IN DECOUPLING CIRCUITS

32-17. Another type of trouble which can be localized using voltage measurements, is a short circuit in a decoupling network. There are two general ways in which decoupling networks are connected. These are the series method and parallel method shown in Fig. 32-53.

Short in Series Decoupling Circuits. – We will discuss the procedure for localizing a short in each of these networks, starting with the series type. Suppose that C_2 is leaky. Let's see how we localize the trouble to this condenser. This condition is illustrated in Fig. 32-54.

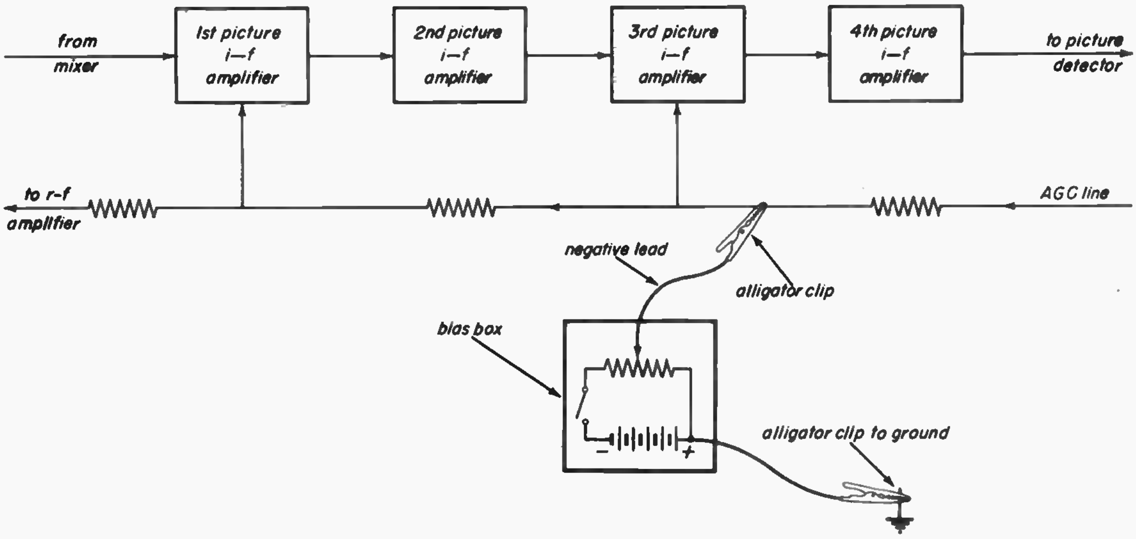

Fig. 32-52

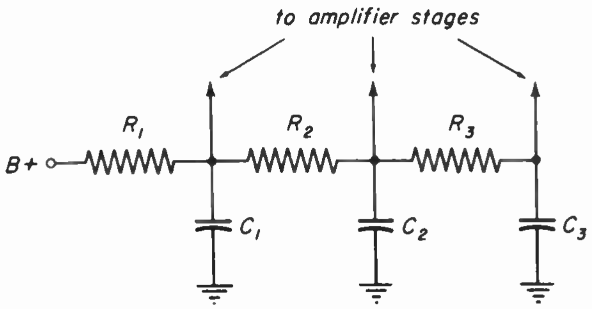

(a) series decoupling circuit

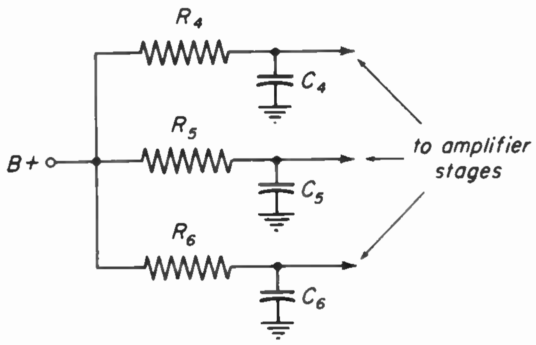

(b) parallel decoupling circuit

Fig. 32-53

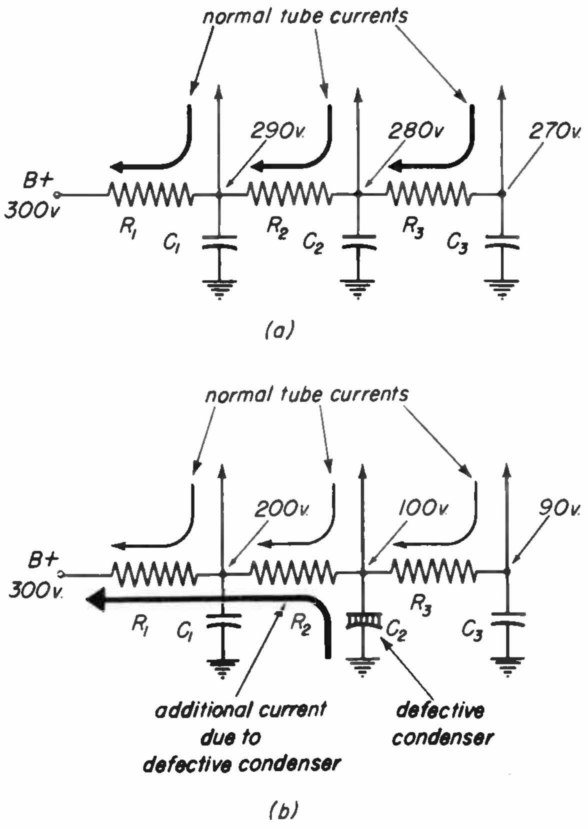

Fig. 32-54

Part *a* of the figure shows the voltage distribution as it might appear in a normally operating set. Note that in our example, a 10 volt drop appears across each resistor due to normal tube currents. Part *b* of the figure shows what happens if C_2 becomes leaky. The d-c leakage resistance of C_2 allows additional current to flow through R_1 and R_2 so that reduced voltages appear on all three resistors as shown. Any one of the three bypass condensers might be suspected and the idea is to isolate the correct one without disconnecting it from the circuit. There are two ways to do this. One is to examine all three resistors. In this case R_1 and R_2 will probably overheat. You can feel this or possibly observe a burned appearance of the two resistors. However, in this case, R_3 will have the normal voltage drop (10 volts) across its terminals, but both R_1 and R_2 will have an excessive drop (100 volts). The defective condenser is connected to the junction of the resistor with the normal voltage drop and the adjoining one with the excessive voltage drop.

In the event that C_1 is the defective condenser, the localizing procedure is the same as before. In this case, R_1 is the resistor which will overheat or have the excess voltage drop across it. The other two resistors will function normally. If C_3 should become defective, this is localized by the fact that *all three* resistors will overheat and have excessive drops across them.

Short In Parallel Decoupling Circuits. — Localizing shorts in parallel decoupling circuits is somewhat easier than in the series type. In parallel circuits each RC combination is independent of the others. Therefore, a short in one branch will not affect the other branches, but is quickly localized to the individual branch at fault. This is shown with the aid of the diagrams in Fig. 32-55.

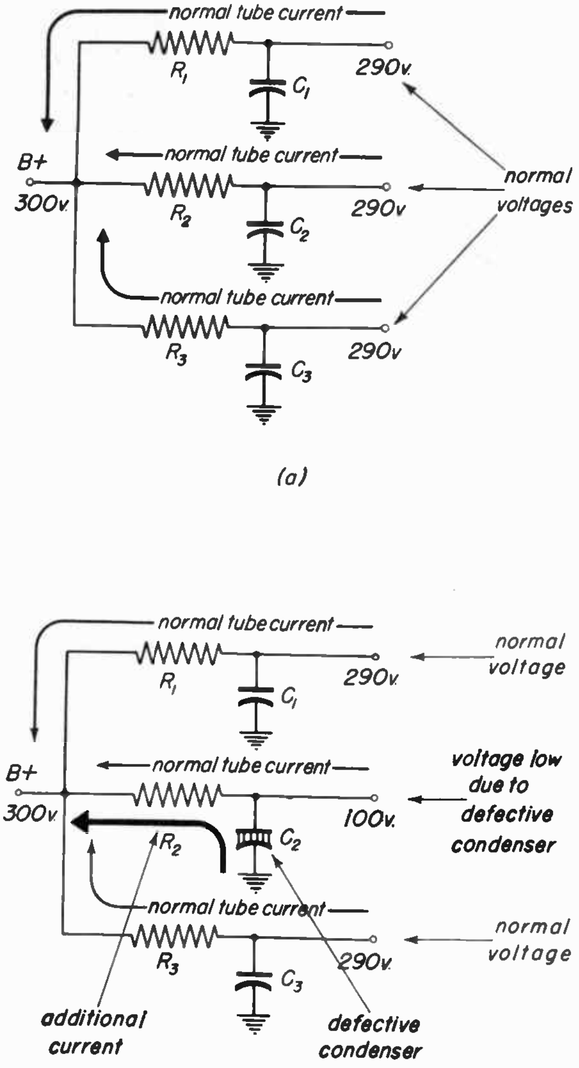

(a)

(b)

Fig. 32-55

Part *a* of the figure shows in simplified form normal operation of a three-branch parallel decoupling circuit. The only currents flowing are due to tube operation. The output voltage in each leg is 290 volts. In part *b* of the figure we find that condenser C_2 is defective. Because of this short, additional current flows through R_2, overheating it and also causing an excessive voltage drop across it. The output voltage of this defective branch is now only 100 volts. However, note that the voltages of the other two branches are not affected. This makes it relatively simple to localize the trouble to C_2.

TROUBLES NOT AFFECTING D-C VOLTAGE

32-18. – Certain troubles may occur in the picture i-f section which do not cause any changes in the normal d-c operating voltages of the various amplifier stages. Some of these troubles are caused by open decoupling filter condensers and we shall discuss these first.

We will find that in the case of an open plate decoupling condenser in a picture i-f amplifier, the effect is frequently a reduction of gain. This appears on the kinescope as a somewhat weaker picture without snow. If the loss of gain is severe enough, overloading may occur due to the action of the AGC system, as previously described. The exact effect on the picture depends upon which i-f stage the defective condenser appears in. This is especially true in stagger-tuned picture i-f stages. For example, if the loss of gain was in a stage tuned to the *low* frequency end of the picture i-f response, the picture would be weaker than normal and have low frequency smear. In addition, the horizontal sync and blanking action might be poor. If the loss of gain was in a stage tuned to the high frequency end of the picture i-f response the effect would be different. On a test pattern we would note the effect on the vertical wedges. The lines would not "run" all the way into the center. The picture might be somewhat weaker than usual and might be smeared.

In order to see how an open decoupling condenser may affect the operation of an amplifier, we will start by observing the effect on a simple RC coupled amplifier as shown here.

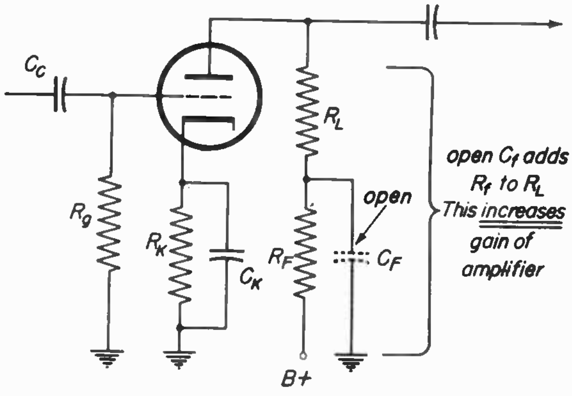

Fig. 32-56

When the decoupling condenser (C_F) is good it acts as a ground for *signal.* This effectively grounds the lower end of R_L, so that R_L is the only plate load resistance in the circuit. Now, consider the case when C_F is open. This no longer grounds the bottom of R_L and R_F is now added to R_L. This increases the plate load resistance and therefore the gain. Whether or not the increase of gain will be appreciable depends upon the original values of R_L and R_F and whether the amplifier tube is a triode or pentode. For example with a triode amplifier, used in the audio section, doubling the plate load resistance may only increase the gain by 10 per cent. This might not even be noticeable. However, in this case, a more serious trouble may develop. This is feedback through the common impedance of the power supply.

Tuned Plate Load. – The effect on gain may be much more serious, if the plate load is a *tuned circuit.* An example is shown in Fig. 32-57.

Refer first to part *a* of the figure. Here we see that the plate load is a resonant circuit. This consists of the coil L_P which is tuned mostly by the output capacitance of the amplifier tube. This resonant circuit ordinarily has a high Q, which gives it a high impedance to develop the required gain. It should be noted that the reactance of C_F is so low that it effectively grounds the bottom of the coil (L_P).

Now refer to part *b* of the figure to see what happens when C_F opens. If this condenser opens, the bottom of the coil is no longer grounded. Because of this, the tube's output capacity is not directly across the plate coil. The resistor R_F is now placed in *series* with L_P, with C_{PK} across the series combination. The bottom of R_F is "grounded" by C_b, a power supply filter condenser. The effect of placing R_F in series with the plate coil, is to *lower the Q* and thus the impedance, of the plate load. This in turn reduces the gain of the stage. Thus, we see that when the plate load is a resonant coil, an open decoupling condenser can cause a loss of gain. This type of circuit is found frequently in picture i-f amplifiers.

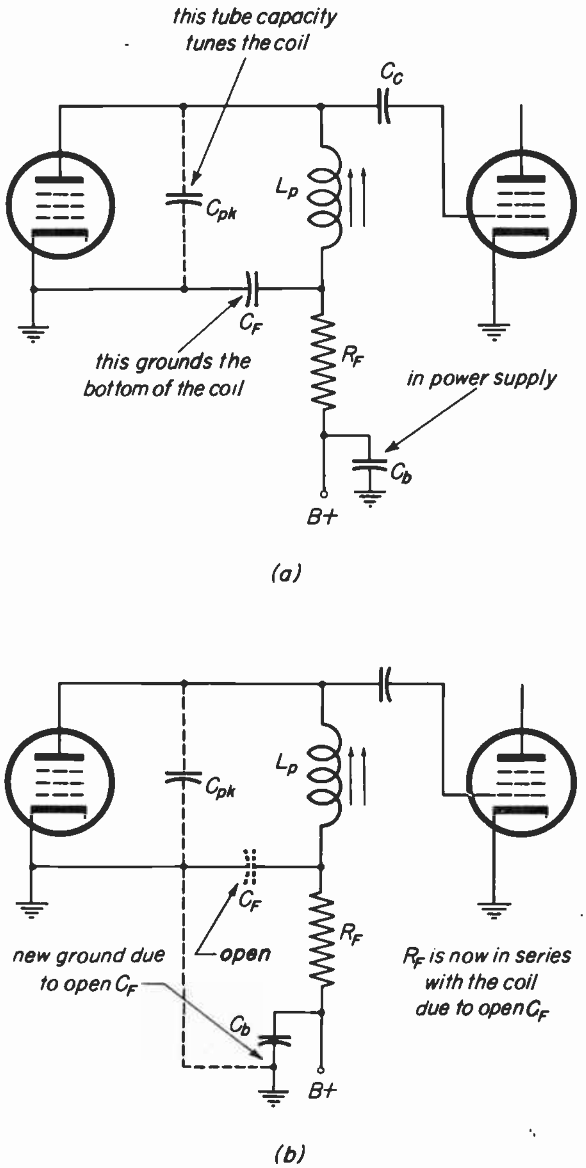

Fig. 32-57

Transformer-Coupled Load. – When a transformer coupled plate load is used, an open decoupling condenser may also cause a loss of gain in an amplifier. This condition is illustrated in Fig. 32-58.

Normally, the bottom of L_P is grounded by C_F and the grid signal is induced into L_S by the current in L_P. If C_F opens up, the signal current flows through R_F in *series* with L_P. This divides the signal across these two impedances(L_P and R_F).

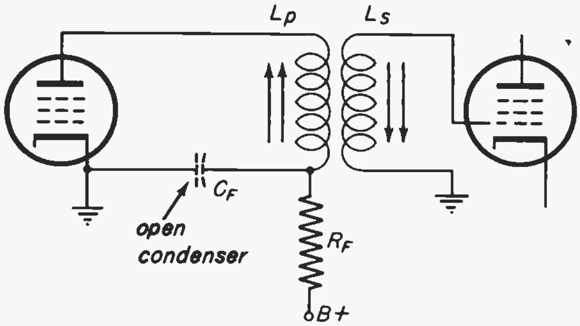

Fig. 32-58

As a result, less signal appears across L_p to be coupled into the grid circuit, resulting in a loss of gain. In addition to this effect, the Q of the primary circuit may be reduced as explained before. This has the effect of further reducing the gain of the stage.

Summing up the effect of an open plate decoupling condenser, we see that if we have a resistor for a plate load, we may actually get an *increase* in gain. On the other hand, if the plate load is a resonant coil or the primary of a transformer, an open plate decoupling condenser will produce a *loss* of gain. In speaking of this type of trouble as it concerns picture i-f amplifiers, it's a pretty safe bet to say that an open plate decoupling condenser causes a *reduction* of gain. Generally, the best way to determine if a condenser is open is to parallel it with a good one of the same type. If the condenser was open, the circuit will show normal operation when shunted with a good one.

Open Coupling Condenser. – Another trouble which would not affect d-c potentials is an open coupling condenser. This is shown in Fig. 32-59.

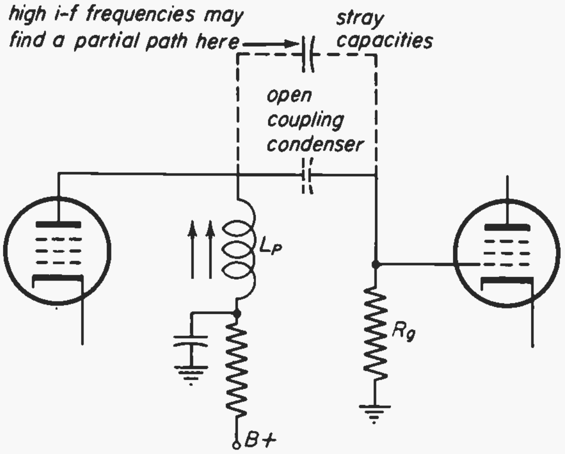

Fig. 32-59

At first thought it might seem that if a coupling condenser opens up we would get no picture at all. This is not necessarily the case. The reason for this is that in every circuit some stray capacity coupling is present. This stray capacity has a much lower value than the normal coupling capacitor. Because of this, the signal will be attenuated and will appear weak on the kinescope. The open coupling condenser may alter the frequency response of the i-f section and cause the picture to be smeared. One reason for this is the effect of the grid resistor R_g in *damping* the plate coil. When the coupling condenser is good, its *low reactance* has the effect of placing R_g in shunt with L_p. This damps the coil and broadens its bandpass. With the coupling condenser open, we lose the damping effect of R_g and the bandwidth of the amplifier changes. This effect and the change in gain of the amplifier due to the open condenser may cause smear. Also, as previously mentioned, if the open condenser is in the latter i-f stages, overloading may occur due to the effects of AGC action.

Grid Blocking. – An open or extremely high value of grid resistor can sometimes cause an intermittent picture to occur. When this happens the action is due to *blocking*. Blocking occurs when a coupling condenser builds up a sufficient charge to bias off an amplifier tube. The charge then leaks off slowly and the tube resumes operation until the next cut-off bias reappears. This case is illustrated in Fig. 32-60.

If R_g opens or increases to an extremely high value, the grid may draw current on positive signal excursions, *provided that the signal amplitude is high enough* to overcome any bias which may be present. For this reason, if blocking occurs in the i-f section it is more likely to happen in the third or fourth stages where

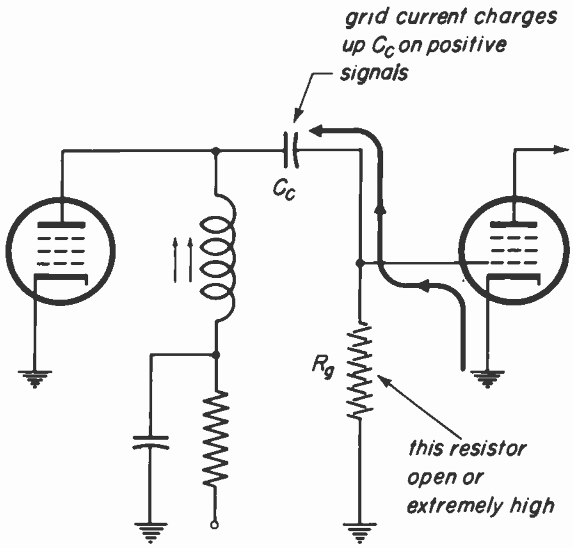

Fig. 32-60

the signal amplitude is high. In order for blocking to occur, the following conditions are necessary: (1) there must be a coupling condenser; (2) the grid resistor value must be high; (3) the signal amplitude must be high. When we speak of signal amplitude, this also includes the effect of noise. The noise riding on top of the signal may increase the *effective* signal amplitude and thus make the condenser charge to a level sufficient to cut off the tube intermittently. During the times that grid current is not flowing, the coupling condenser discharges very slowly through the excessive grid resistance or its own leakage resistance.

You may be able to localize this condition of blocking by putting a d-c meter on the grid of the suspected stage. If the picture becomes steady when the voltmeter is connected at the grid, you can suspect a defective grid resistor or circuit. In this case, the impedance of the meter takes the place of the defective resistor and permits the condenser to discharge rapidly, thus restoring the original bias.

REGENERATION IN PICTURE I-F STAGES

32-19. – Regeneration or oscillation (sometimes called "ringing") may occur in the picture i-f amplifiers. This will usually produce a definite indication on the kinescope which may appear as one of the following:

1. Smudging of the vertical lines (Fig. 32-61 *a*)
2. Close, regularly spaced reflections (Fig. 32-61 *b*)
3. Horizontal streaks through the vertical wedges of the test pattern (Fig. 32-61 *c*)

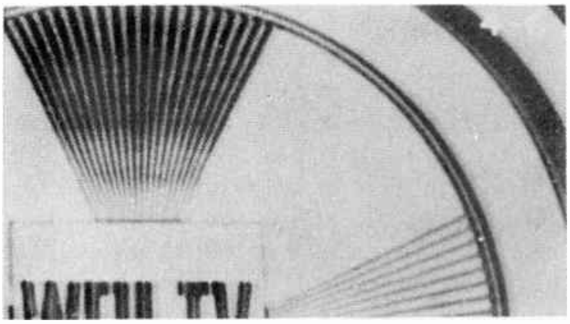

(a) Smudging of the Vertical Lines

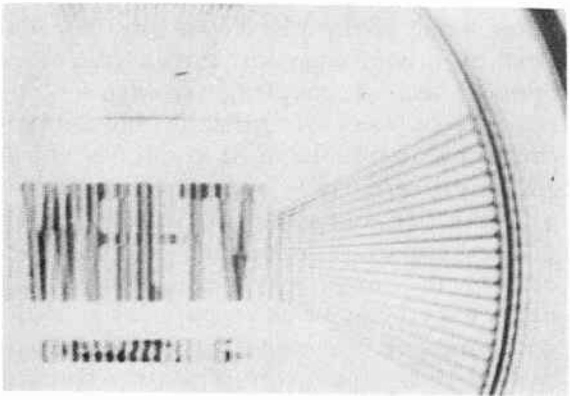

(b) Close, regularly spaced reflections

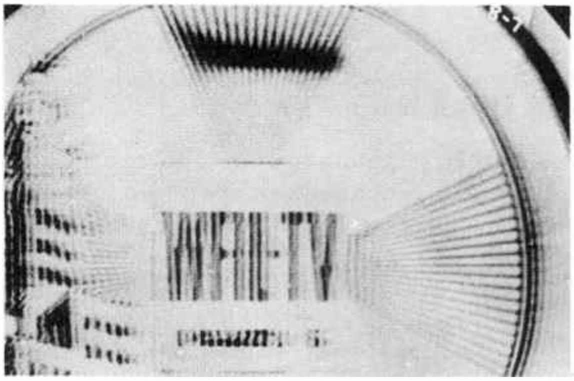

(c) Horizontal streaks through Vertical Wedges

Fig. 32-61 *(from PICT-O-GUIDE)*

In the case of the horizontal streaks, these cut across the vertical wedge at a point corresponding to the side band frequency at which regeneration occurs. For example, if the i-f amplifier is regenerative at a frequency 3 mc. from the picture i-f carrier, the horizontal streaks will be seen at a section along the vertical wedge equivalent to 3 mc., or 240 line resolution.

There is a difference between regeneration and oscillation. Regeneration occurs when part of the output signal from an amplifier is fed back to its input in such a manner as to reinforce the original signal. Regeneration is *not* self-sustaining in that it always requires an external source of signal to be present. As soon as you remove the external signal, the regeneration vanishes.

Oscillation occurs in a similar manner. However, there is a very important distinction. That is, oscillation does not require the presence of an external signal to sustain it. It is self-sustaining. While an external signal may be required to start oscillations in some cases, it is not required to keep it going. Take away the external signal and the circuit will *continue* to oscillate.

Regeneration or oscillation in the picture i-f section is generally caused by one of the following two reasons. First and probably most common is the detuning of a picture i-f stage so that its resonant frequency is now the same as one or two other stages. This produces excessive amplification at that particular frequency and makes the possibility of feedback considerably greater. One way to check this is to touch each of the coils with your finger. This detunes the circuit and may stop the regeneration or oscillation. If so, the set needs alignment. (This will be covered in a later lesson.)

The second cause of regeneration or oscillation is some undesired feedback path. This may occur due to improper lead dress, incorrect positioning of parts or some similar way. The circuit permits feedback to occur in such amplitude and phase as to produce noticeable regeneration or even oscillation. When replacing parts or troubleshooting the i-f section, it is important to see that the original lead dress is maintained and that parts are replaced in their original positions.

Blocked Picture. – If oscillation occurs in sufficient strength in the picture i-f stages, the result on the screen may be a completely *blank* raster (no snow). This usually occurs only in sets which use a *manual* bias control for the picture i-f stages (usually called the contrast control). In a condition such as this, we can measure a d-c output across the picture second detector which might look like signal. However, this d-c output will in all probability be considerably higher than you could normally expect from a signal and this should make you suspect i-f oscillations. What happens in this case is as follows. When the i-f bias control is turned up to increase the strength of the picture, this *reduces* the bias on the picture i-f amplifiers. The reduction of bias increases the gain of the amplifiers making them more susceptible to oscillation. If oscillation occurs in an i-f amplifier, it will probably do so at high amplitude compared to signal. This produces a grid leak bias in one or more stages which is so high that the normal signal cannot override it and consequently never reaches the screen. The oscillation is an unmodulated carrier and when rectified in the second detector produces a d-c output. However, there is no modulation and for this reason, the kinescope screen remains blank. In some cases, reducing the setting of the manual bias (contrast) control will stop the oscillations permitting you to at least see some *snow* on the raster and possibly a weak picture. This clue indicates the presence of i-f oscillations.

In receivers using AGC, this trouble is not so likely to occur. The reason for this follows. Suppose that oscillations did start. This would be rectified and *increase* the AGC voltage. In turn, the gain of the amplifiers would be reduced, tending to *stop* the oscillations. Thus, receivers using picture AGC automatically tend to stop the oscillations.

SOUND BARS IN PICTURE

32-20. If a sound trap in the i-f section is detuned, sound bars may appear in the picture on the kinescope. In addition to a detuned sound trap, there are other factors which may cause bars. Because of these various factors, it is necessary to be able to identify all the causes of sound bars in order to localize the trouble.

Sound bars are caused by audio frequency signal variations which reach the kinescope grid. They have the appearance of *dark* horizontal bars. These vary in width and number in accordance with changes in the sound modulation. A photo showing the appearance of sound bars is given here:

Fig. 32-62

The actual number of dark bars appearing on the screen at any one instant depends upon the audio modulation frequency at that time. There will be one dark bar for each 60 cycles of the modulation frequency. For example, there will be 10 black bars if the audio frequency is 600 cycles and 3 bars for a 180 cycle frequency. The intensity or degree of blackness of the bar is a function of the amplitude of audio signals. High amplitude audio signals cause the blackest bars.

In the absence of audio modulation the bars will disappear from the screen. This is a good clue for identifying them as they vary with the audio modulation.

As we said, one way in which it is possible to get sound bars is by having a detuned sound trap. There are other things which may cause sound bars and these are listed below:

1. Detuned sound trap
2. Power supply coupling
3. Radiation of sound i-f harmonics
4. Microphonic r-f, i-f, or video amplifier tubes
5. Microphonic horizontal AFC tube

Certain of these factors are dependent upon the setting of the *volume control* and this helps to localize the source of trouble. If the bars are caused by a detuned sound trap or by radiation of sound i-f harmonics, the setting of the volume control *will not* affect the bars. All the other causes mentioned *will* be affected by the setting of the sound volume.

Detuned Sound Traps. – The function of these trap circuits is to prevent the sound i-f carrier from being detected and affecting the kinescope grid. If the sound i-f carrier reaches the picture second detector, sound bars may be produced in one of two ways. The sound i-f signal with varying amplitudes may be rectified in the picture second detector, be amplified and passed on to the kinescope as the original audio frequencies. This produces the conventional varying horizontal dark bars. The second possibility is that the sound and picture carriers will beat together in the picture second detector producing a 4.5 mc. beat frequency. (In receivers having properly operating 4.5 mc traps, including intercarrier types, this trouble cannot appear.) If the 4.5 mc. signal gets to the kinescope, the resultant interference looks considerably different from those described above. The 4.5 mc. signal will produce about 240 vertical or diagonal fine dark lines in the picture. The sound modulation of the 4.5 mc. signal produces a "herring-bone" effect in the picture, which varies with the sound modulation.

If the sound bars are accompanied by a 4.5 mc. beat, the trouble is localized to the i-f or video amplifier section. In split-sound receivers, the trouble may be misalignment of the sound i-f traps in the picture i-f section. Or, it may be due to misalignment of, or a defect in, the 4.5 mc. trap in the video amplifier. In intercarrier type receivers, the trouble may be caused by misalignment of the picture i-f amplifiers or the 4.5 mc. traps and/or the 4.5 mc. i-f transformer.

In the event that sound bars are present *without* the 4.5 mc. beat, the trouble, in a split sound receiver, could be caused by misaligned sound traps, or by one of the other troubles previously mentioned. Methods of localizing these various other causes will be taken up as we come to them.

Power Supply Coupling. – As you know, many circuits in the television receiver operate from the common low voltage power supply. Under some conditions it is possible to couple signals, from one circuit to another through the medium of the power supply impedance (Z_b). In practically every case, such couplings are undesirable and it is for this reason that extensive use of decoupling filters is made in television sets. Among other things, power supply coupling may cause the appearance of sound bars in the picture. This happens only when the receiver is operated at *high volume levels*. The reason this happens can be explained with the aid of the simplified diagram in Fig. 32-63.

At *high* audio volume levels, large currents, at the audio rate are drawn from the power supply through the power supply's internal impedance Z_b. Because of this, audio voltages appear across Z_b and are coupled to all other circuits using this supply. These audio voltage variations cause changes in picture signal gain, sync phasing, picture width and have other effects. The voltage variations are applied to the video amplifier,

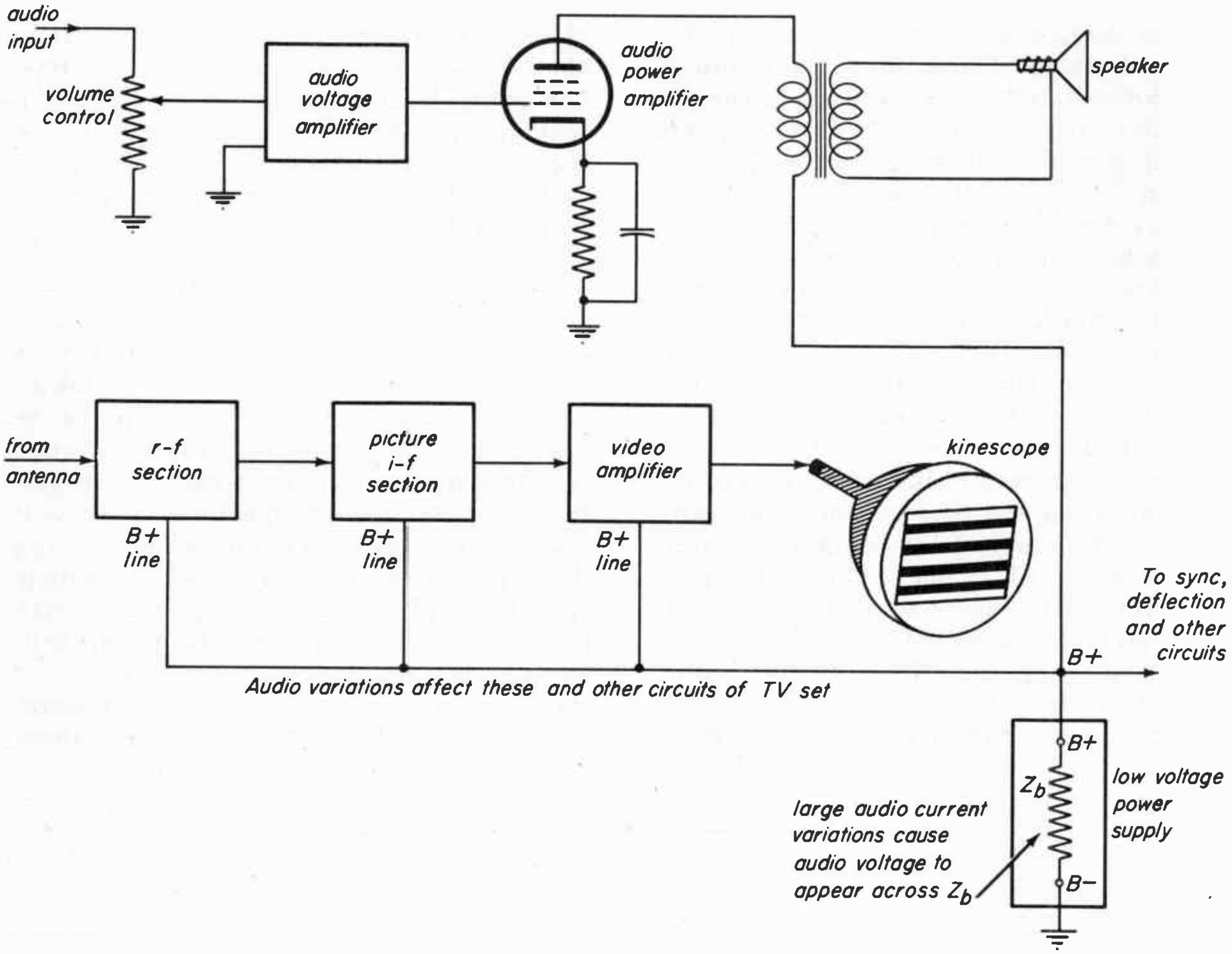

Fig. 32-63

where they may be amplified and passed on to the kinescope. The net result of all these variations is the appearance of sound bars in the picture. Since this trouble only appears at high volume levels, there is the possibility that it might be caused either by power supply coupling or by a microphonic tube. To localize between either of these possibilities turn down the volume control and tap the chassis. If the sound bars reappear while tapping, they are due to microphonic action. Otherwise, they are caused by power supply coupling. The coupling is generally caused by inadequate filtering, either in the decoupling circuits of the audio power amplifiers, or in the low voltage power supply. Check this by shunting a good electrolytic across each of the suspected condensers. It is possible that all receivers of one model may have this difficulty.

Radiation of Sound I-f Harmonics. – Another way in which sound bars may be produced, is for a harmonic of the sound i-f to be radiated and picked up in the r-f circuits of the receiver. This may happen as follows: Harmonics of the sound i-f are produced by the non-linear action of the sound detector. One of these harmonics may fall within the r-f range of a particular TV broadcast channel. If this happens and the harmonic amplitude in the r-f circuits is great enough, a beat frequency pattern will appear in the picture. For example, assume we have a sound i-f of 21 mc. The third harmonic of 21 mc is 63 mc. which falls in the r-f band of Channel 3. Assuming we are tuned to Channel 3, its picture carrier frequency is 61.25 mc. The difference frequency between the picture carrier (61.25 mc) and the sound harmonic (63 mc) is 2.75 megacycles. This is the interfering beat frequency which will appear on the screen. The sound modulation in this beat frequency pattern will produce sound bars of the herring-bone type. These bars are not affected by the setting of the volume control. Furthermore they may not appear on all channels.

To localize this trouble, remove one of the sound i-f amplifier tubes. If the beat pattern and sound bars disappear, the trouble is caused by a sound i-f harmonic. The actual causes and cures for this trouble will be covered in more detail in a later lesson on interference.

Microphonic R-f, I-f or Video Tubes. – If the r-f, picture i-f, or video amplifier tubes are microphonic, sound bars may appear. These bars are caused by vibration of tube elements due to the sound coming from the speaker. Microphonics generally occur only at fairly high volume levels and so will disappear when the volume is lowered. As mentioned before, the presence of microphonics may be checked by tapping the chassis. If microphonics are present, the defective tube can generally be located by tapping each tube gently until the defective one is reached. The most extreme microphonic action will appear when tapping the defective tube.

Microphonic Horizontal AFC Tube. – The effect of sound bars may be present in some sets if it has a microphonic tube in the horizontal AFC circuits. Vibration of the elements in this tube may cause changes in its gain. This in turn changes the horizontal sync phasing. The result is horizontal picture pulling in accordance with sound modulation and giving the appearance of sound bars. The amount of horizontal picture pulling varies with the intensity of sound and is not present at low volume levels. Localization for this trouble follows the same general procedure as for any microphonic tube.

◆

NOTES

NOTES

TELEVISION SERVICING COURSE

PREPARED BY

RCA INSTITUTES, INC.
A SERVICE OF RADIO CORPORATION OF AMERICA

HOME STUDY DEPARTMENT
350 West 4th St., New York 14, N. Y.

LESSON THIRTY THREE

PART I - VIDEO AMPLIFIERS

PART II - TROUBLESHOOTING VIDEO AMPLIFIERS

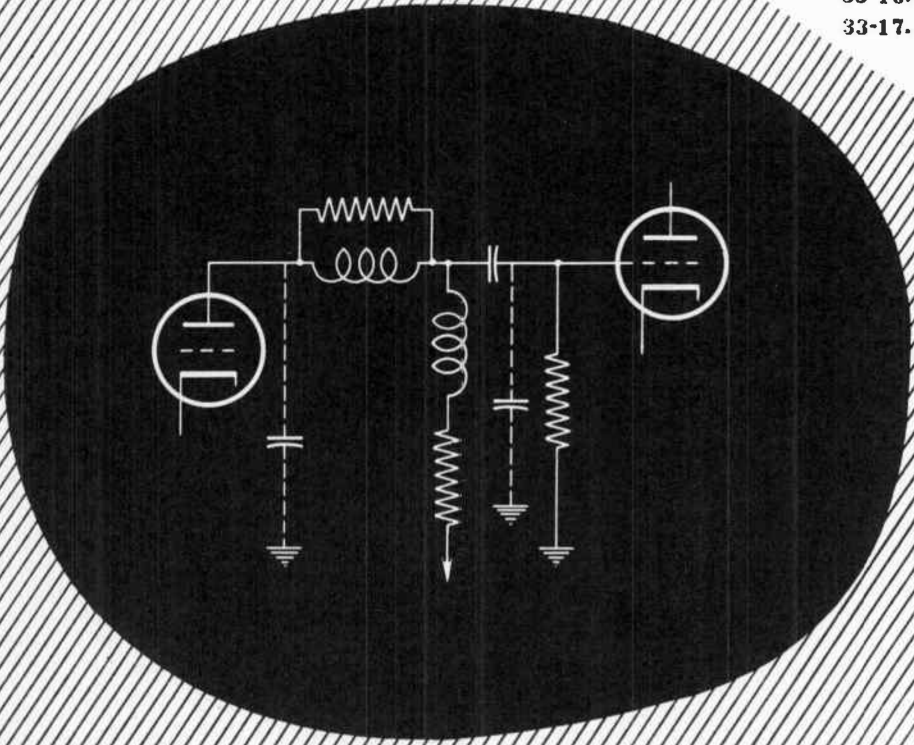

Lesson 33

PART I – VIDEO AMPLIFIERS

PURPOSE AND REQUIREMENTS OF THE VIDEO AMPLIFIER SECTION

33-1. Purpose. All the information necessary to form the picture on the screen of the kinescope is contained in the signal at the output of the picture second detector. In addition to the picture components, this composite signal contains the blanking pulses which cut off the kinescope spot during horizontal and verical retraces, and the sync signals which control horizontal and vertical sweep.

The output of the picture second detector, usually about 2 volts peak-to-peak, is not sufficient to control the kinescope and give the desired contrast between light and dark elements of the picture. Therefore, the signal must be built up by one or more stages of video amplification before it is applied to the picture tube grid, as shown in Fig. 33-1.

Requirements of the Video Amplifier. The video amplifier section must reproduce the signal with increased amplitude, and without distortion in phase, frequency or amplitude. Since the video band covers a range of from 30 cycles to 4 megacycles – much greater than that of the audio amplifier – compensating elements which will enable it to pass this wider band are necessary.

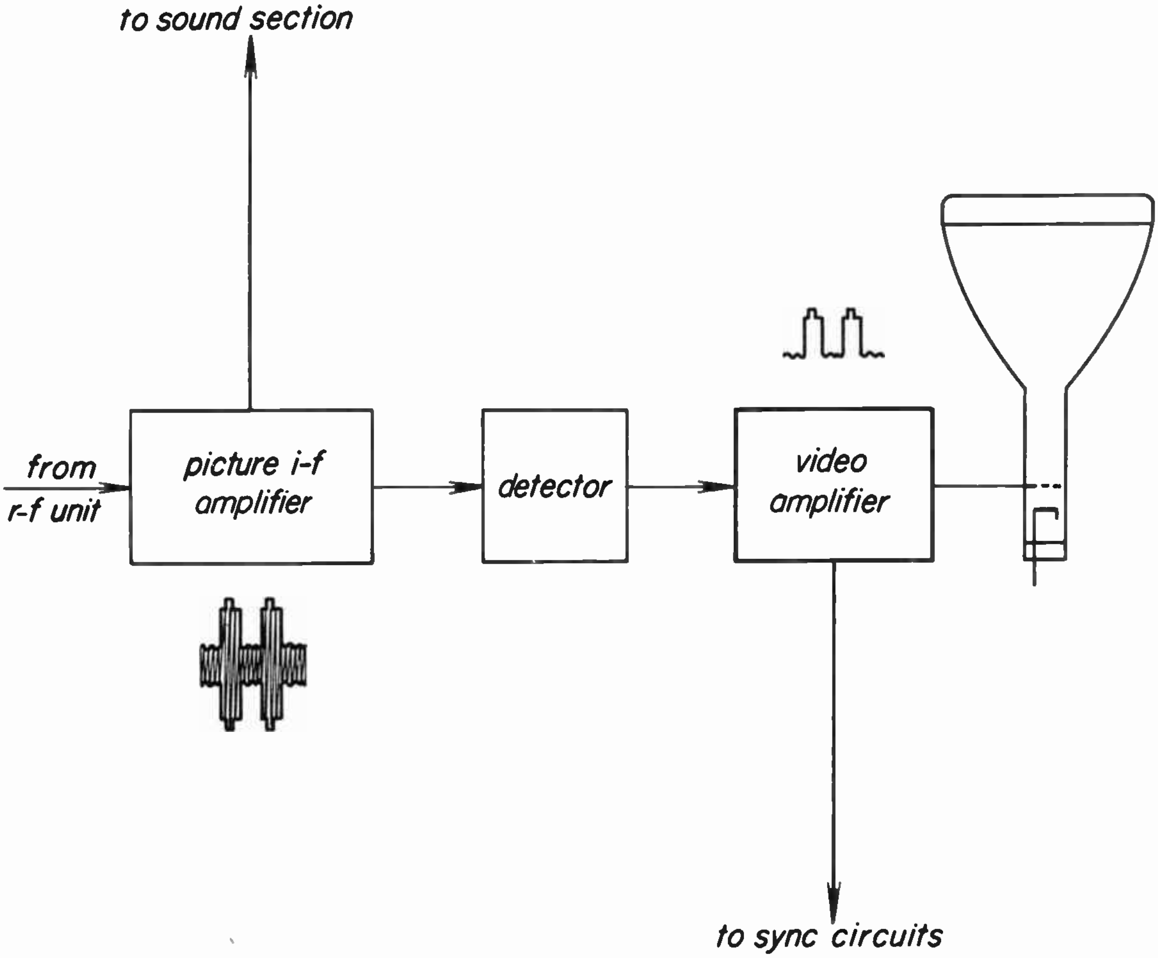

Fig. 33-1

The specific requirements of the video amplifier are:

a. The signal at the picture second detector must be amplified sufficiently to drive the kinescope.

b. The wide range of the video band, from 30 cycles to 4 megacycles, must be passed with sufficiently flat response.

c. The signal must be passed without distortion.

d. The signal at the kinescope grid must be of such polarity that a positive picture will be formed on the kinescope screen.

e. No noise must be introduced by the amplifier, and provision must be made for reducing the effects of external noise.

To carry out these requirements, TV receivers use one or two stages of video amplification with specially designed compensating and control circuits. Some models use a-c coupling of the composite signal between stages (the 630 series, for example); others use d-c coupling (the 240 series, for example); still others use a combination of a-c and d-c coupling.

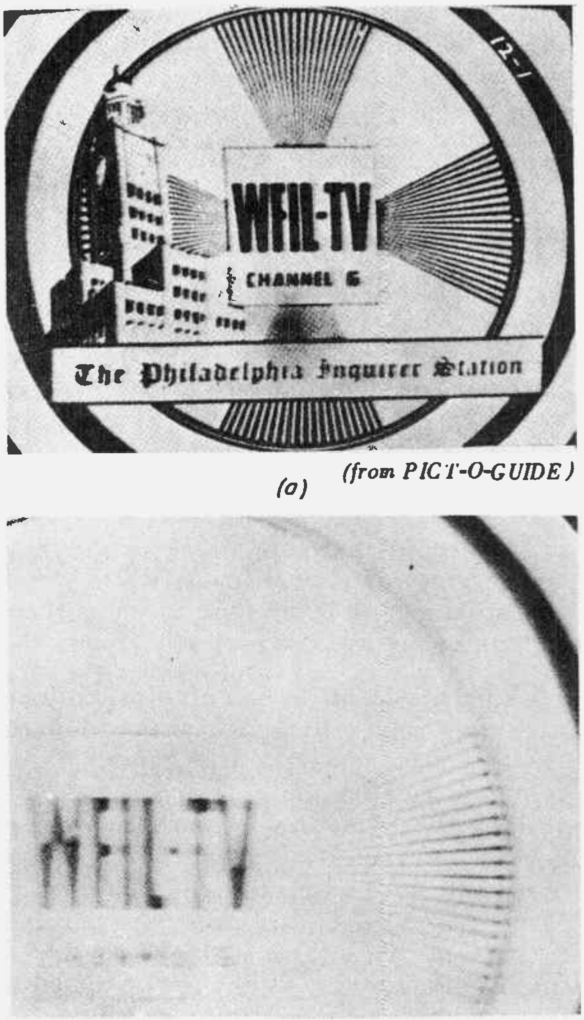

(a) (from PICT-O-GUIDE)

(b) (from PICT-O-GUIDE)

Fig. 33-2

Distortion. If the kinescope picture is to look like the original televised scene, the video signal must pass through the receiver without distortion.

Loss of high frequencies will reduce picture detail, as shown in Fig. 33-2 *b*. The normal test pattern is shown in Fig. 33-2 *a*.

Poor low frequency response appears as a smearing of large areas in the picture, as illustrated in Fig. 33-3. This type of distortion results from phase shift distortion, particularly at low video frequencies.

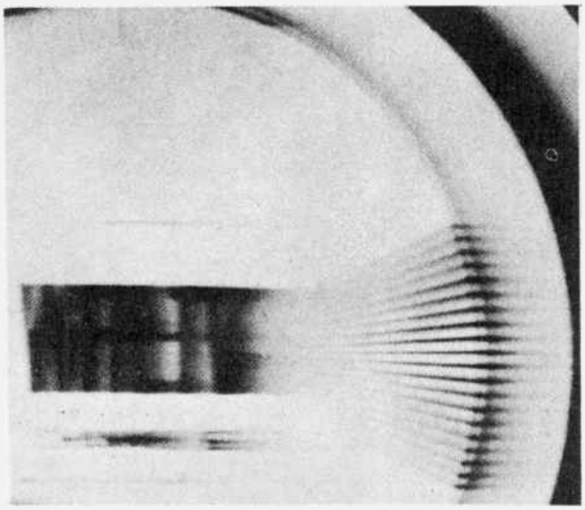

(from PICT-O-GUIDE)

Fig. 33-3

Amount of Gain Required. The gain of the video amplifier must be enough to raise the voltage level of the signal at the output of the video detector to the level needed for proper operation of the kinescope. The greatest amount of gain in the television receiver takes place in the picture i-f stages. For practical reasons, however, this gain is adjusted to a level which will deliver a second picture detector output picture signal of about 2 volts maximum. A signal voltage of about 40 volts is needed at the kinescope grid for proper operation. The video amplifier gives the 40 volts with proper input signal from the second detector.

Polarity of Signal. – The accepted standard for television transmission is to have black represented by full carrier (actually 75% of maximum to allow for sync pulses) and white by minimum carrier.

The full carrier will give, at the output of the second detector, a positive or negative signal, according to whether the load is in the cathode or the plate circuit of the detector as shown in Fig. 33-4. This detector is usually a diode, but in some cases a germanium crystal may be used instead. (For technical reasons, the negative signal is much to be preferred; it is easier, by proper biasing, to clip the tips of sync pulses for reduction of noise effects.)

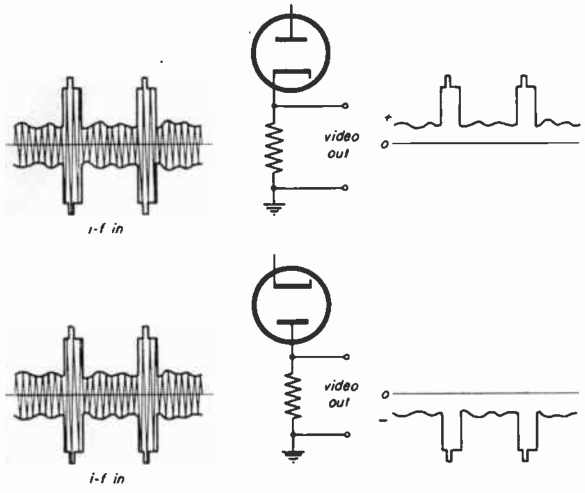

Fig. 33-4

Each stage of amplification reverses the polarity of the signal. Whether a given signal produces a light or dark spot on the screen depends on three factors: signal polarity, odd or even number of video stages, and cathode or grid kinescope drive; a positive signal on the grid, or a negative signal on the cathode will produce a bright spot, and vice versa.

Altogether, there are eight possible combinations of these factors, of which four give a negative (dark instead of light and vice versa) picture. The four usable combinations are indicated in Fig. 33-5.

In the sections that follow we will examine critically the functions and characteristics of the video amplifier. First, however, we will review briefly the essential elements of the composite video signal which the amplifier is required to handle.

THE COMPOSITE VIDEO SIGNAL

33-2. The composite video signal is a varying voltage containing all the information needed to reproduce the picture. This information consists of;

a. Picture detail; the light and dark spots in each scanning line;
b. Blanking pulses for blanking out the scanning retraces, both horizontal and vertical; and
c. Synchronizing pulses to insure correct timing for the horizontal and vertical scanning.

Components of the Composite Video Signal. The information in two lines of a kinescope picture is shown in Fig. 33-6. The composite video signal is shown with maximum amplitude for the sync, with the top of the sync pulse taken as 100 percent. With this as the peak value, the blanking level, which represents the tops of the blanking pulses, is at about the 75 percent level. This is considered the black reference level, since it is reproduced in the kinescope screen as black to make the blanking effective. The blanking level is also called the *pedestal* level, because it serves as a pedestal for the sync pulses.

Variations in amplitude in the video signal lower than the 75 percent level correspond to the desired picture information. The lower amplitudes represent whiter picture information, as the signal variations are further removed from the black level. In order to insure a wide enough amplitude swing between black and white for suitable range of contrast in the picture, the maximum white areas are at a signal level that is 15 percent or less of the peak signal amplitude.

The black peaks of picture information are shown a little below the blanking level – in general practice, about 5 percent lower. This is to minimize the possibility of any picture information extending above the 75 percent level, which might interfere with the sync. The top 25 percent of signal amplitude is used only for the synchronizing pulses. Similarly, the 15% tolerance at the white portions is permitted so that slight inaccuracies in adjustment cannot cause complete removal of the carrier.

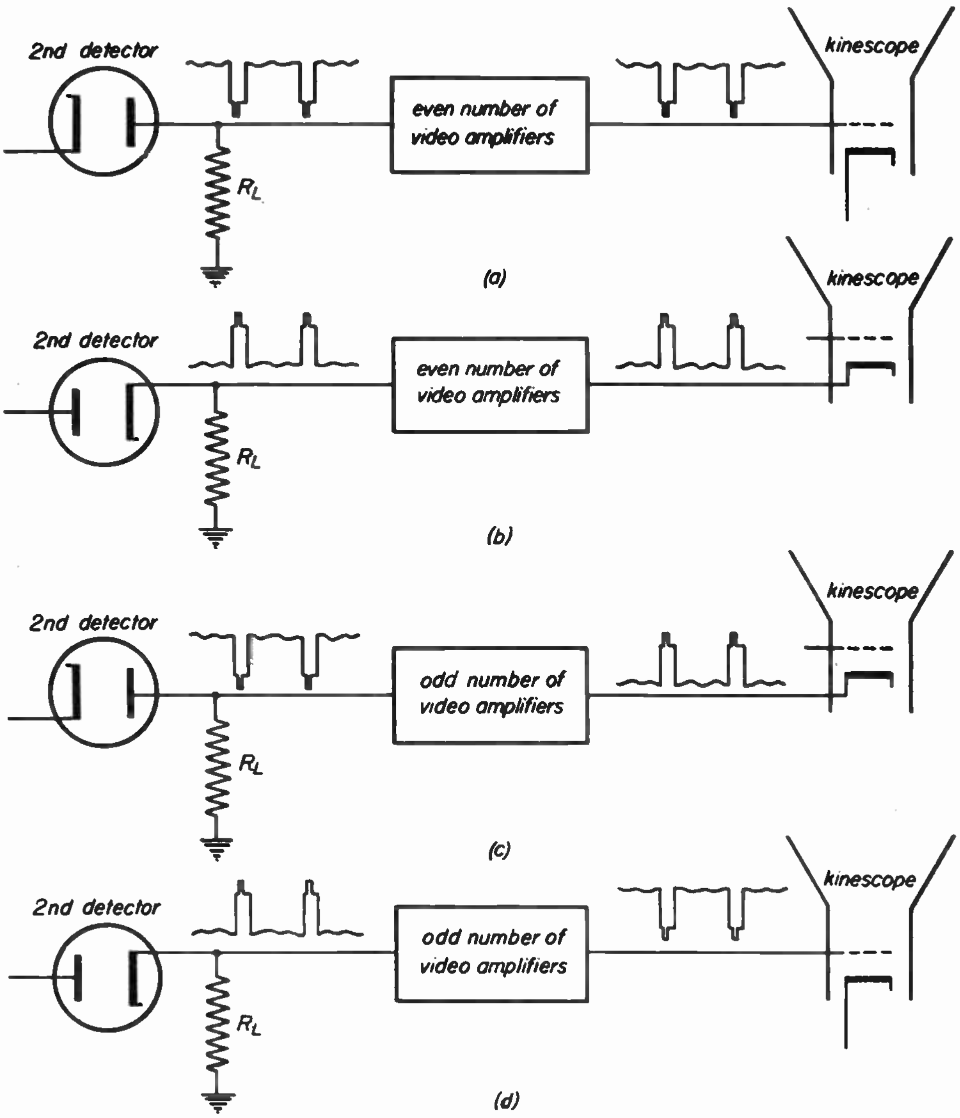

Fig. 33-5

The Video Signal and the Reproduced Picture. Referring to Fig. 33-6*a* and *b*, let's trace the signal variations to see how they correspond to the reproduced picture on the kinescope screen. The left edge of the illustration *b* corresponds to the time the kinescope beam is at the left side of the frame, just beginning the active trace of picture information in one line. Note how white corresponds to low amplitudes, and the high amplitudes are dark.

At the end of this active line trace, the horizontal blanking pulse occurs, raising the video signal amplitude to the black reference level. This blanks out the beam in preparation for the retrace, which is started by the leading edge of the sync pulse closely following the beginning of the blanking pulse.

The beam remains cut off for the entire blanking pulse period. During this time, the horizontal deflection circuit in the receiver is causing the beam to return to the left side of the kinescope screen. The flyback, started by the leading edge of the sync pulse, is completed before the end of the blanking interval. The beam is now in position to start the second line.

The action continues line by line, to complete a frame of the picture. The vertical blanking and sync pulses then operate to bring the beam back to the top of the kinescope screen, in position to start the next frame.

High and Low-Frequency Limits. Since the standard television picture has 525 lines per frame, and there are 30 frames per second, there must be 15,750 lines per second. The time needed to complete one line, H in Figure 33-6, is 1/15,750 second. Within the period of one line must occur all the variations which make up the electronic equivalent of the picture elements and the blanking and sync pulses. Where the picture has fine detail, with a correspondingly great number of changes from black to white, there must be millions of variations per second.

In addition to picture elements, there are the blanking signals in the form of sharp, squared pulses, and the horizontal sync signals in the form of still sharper squared pulses sitting on top of the blanking pulse pedestal. The fundamental frequency of the horizontal sync pulses is only 15,750 per second: but to produce a sharply squared pulse waveform, an amplifier must pass high-frequency harmonics of the fundamental frequency of the sync pulses. Putting together all these variations – the picture elements and the timing pulses – gives an extremely complex waveform within the period of one line. The video amplifier must be able to pass and amplify this complex wave without distortion.

In order to stay within the assigned bandwidth for a television channel (6 megacycles, including the sound channel), the upper frequency limit of the picture channel signal must be limited to a top value of 4 megacycles.

Since there are 30 frames per second in the television picture, this 30-cycle component is an essential part of the composite video signal. However, even lower frequencies must be considered for proper reproduction of the television image. In Fig. 33-6 a dashed line represents the d-c level, or the average amplitude for that line of the picture. The next line may have an average amplitude of a slightly different level. The composite of all the 525 lines of a frame gives a signal amplitude that represents the average brightness of the picture. Average brightness of the picture may vary, the variations dropping to a rate lower

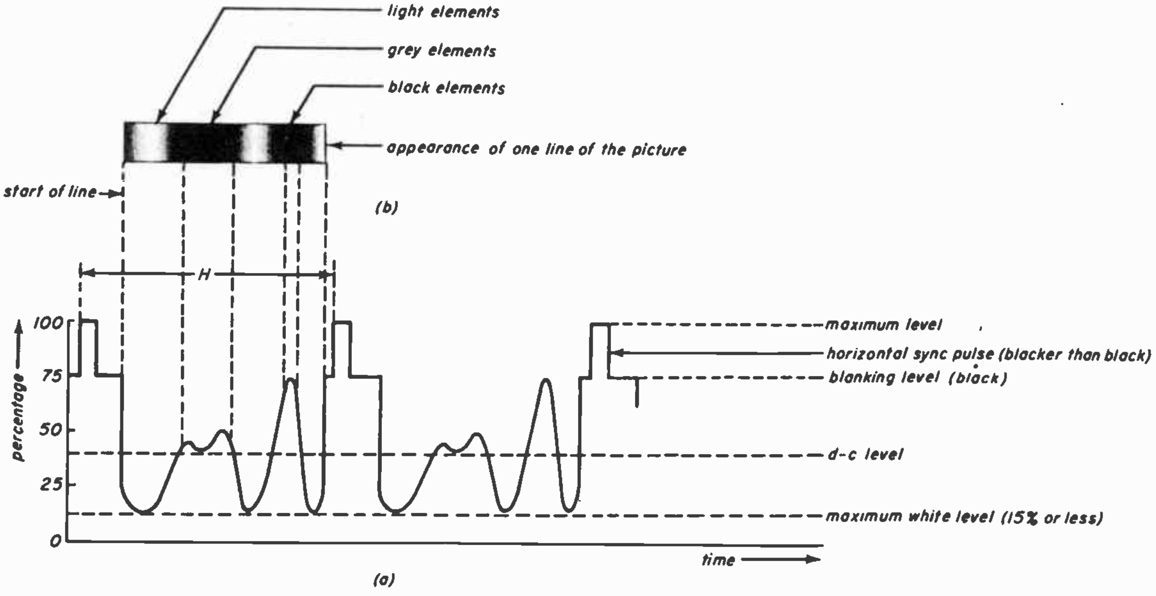

Fig. 33-6

than 30 cycles per second, or it may remain constant for several frames. For practical considerations, however, 30 cps is taken as the low-frequency limit of the video amplifier for flat response (equal amplification for all frequencies in the pass band).

INTERPRETING VIDEO SIGNAL INDICATIONS ON THE KINESCOPE

33-3. The Test Pattern. To facilitate the use of the kinescope for adjusting the television receiver, or for interpreting troubles, test patterns are transmitted by TV broadcasting stations. Let's take a look at the basic elements that determine how the test pattern may be used to check receiver operation.

Fig. 33-7 is a chart that helps interpret picture detail. It takes 63.5 microseconds to complete one line of the picture, 53.3 microseconds in active scanning and 10.2 microseconds for the blanking period. The chart shows the patterns or picture elements produced for signals of different duration or frequencies applied to the kinescope grid.

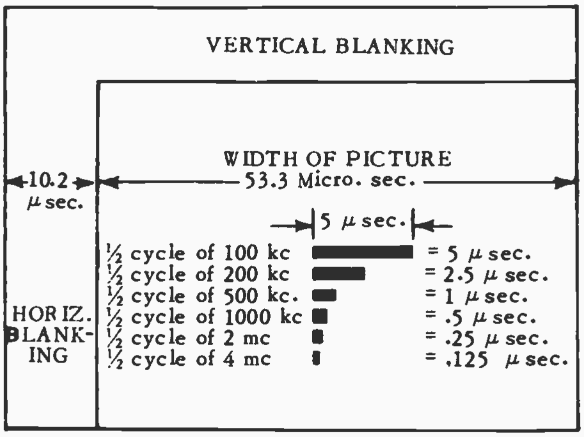

Fig. 33-7

A recurring signal of 15,750 cycles per second, which takes 53.3 microseconds for the forward trace and 10.2 microseconds for the retrace, traces out the picture raster. Signals recurring at a frequency of more than 15,750 cps will show black and white portions for each line of the raster, resulting in one or more vertical or slanting black bars on the kinescope. Recurring signals of less than 15,750 cps will cause black or white impression for longer than the duration of one line, resulting in a number of black and white horizontal bars.

Fig. 33-7 shows the relative lengths or duration of picture elements represented by one half-cycle of frequencies from 100 kcs to 4 mcs. This spacing enables a reasonably accurate interpretation of the frequency response as indicated on the kinescope screen. How it works out when using the wedges of a standard test pattern, shown in Fig. 33-8, is worth discussing at the present time.

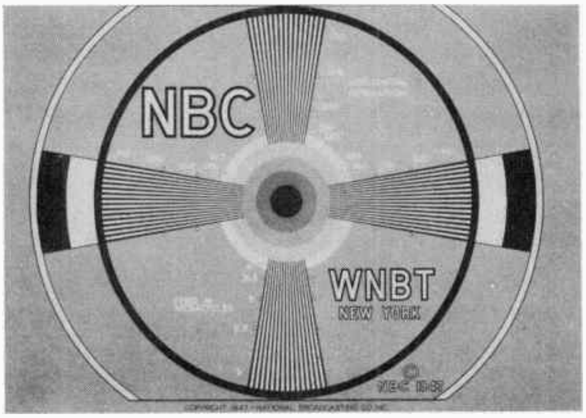

Fig. 33-8

High-Frequency Response. The vertical wedge of the test pattern provides a signal which represents the higher video frequencies. Bars at the outside edge of the vertical wedge are spaced to be the equivalent of 127 bars to a line, or a frequency of 2 megacycles. The bars draw together near the bottom of the wedge, so that the spacing is the equivalent of twice as many bars per line, or a frequency of 4 mcs. For good high-frequency response, the lines of a vertical wedge are sharp all the way in to the center; Fig. 33-2*a* shows this condition. If the high-frequency response is poor, the bars become blurred near the center, as shown in Fig. 33-2*b*. The point in the wedge at which the bars blurred indicates the limit of high-frequency response.

Low-Frequency Response. The horizontal wedge of the test pattern provides a means of checking the low-frequency response. Although exact analysis is difficult, and depends on the particular pattern used, it is roughly true that the center line of the horizontal wedge has a length equal to about one-half the picture width, and thus represents a frequency of about 15,000 cycles. The other lines in the horizontal wedge may be said to represent frequencies of from about 20,000 cycles to one megacycle. The sharpness and blackness of these lines indicates the limit of low-frequency response. Poor low-frequency response is apparent when the lines of the horizontal wedge are not as sharp or as dark as the lines of the vertical wedge, as indicated in Fig. 33-9.

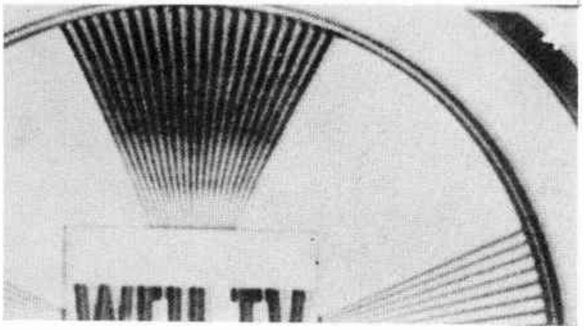

(from PICT-O-GUIDE)

Fig. 33-9

Of course, if the horizontal wedges are stronger than the vertical wedges, the low frequencies are being amplified to a greater degree than the highs, and we again have poor high-frequency response.

Defects in low-frequency response are often accompanied by excessive phase shift. This usually appears as a smear or white border preceding or following black lines or figures, as was shown in Fig. 33-3.

Another way of checking the low-frequency response is by examining the vertical sync pulse as it appears on the kinescope screen. This is done by advancing the BRIGHTNESS CONTROL until the black portion of the picture or test pattern is gray, then advancing the VERTICAL HOLD CONTROL until the picture is held half-way between the frames. The vertical sync pulse will then appear in the center of the kinescope screen in the pattern shown in Fig. 33-10.

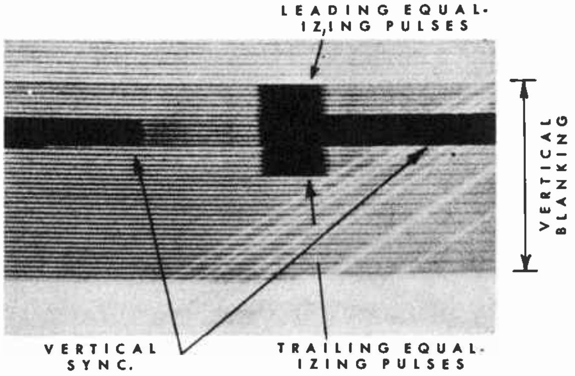

(from PICT-O-GUIDE)

Fig. 33-10

Why the pattern appears in this form will be explained in the section on sync circuits. For checking low-frequency response, we are concerned only with the relative blackness of the various parts of the pattern.

Since the black portion of the test pattern has been reduced to gray, and both the blanking pulse and the sync pulse appear in the picture, we have three levels of blackness. The vertical blanking area must appear blacker than the darkest part of the regular test pattern, and the vertical sync and equalizing pulses must appear much blacker than the blanking pulses. If this relative gradation in blackness does not appear, a fault in low-frequency response is indicated. The vertical pulse represents a frequency of about 30,000 cycles, with a repetition rate of 60 times a second.

BASIC A-C VIDEO AMPLIFIER

33-4. In a well-designed high-fidelity audio amplifier, a flat frequency response is obtained for a bandwidth of about 50 to 15,000 cycles. To pass this band of frequencies, it is usually necessary to use a reistance-capacitance coupled circuit. Care must be used in determining the values of the circuit elements so that all frequencies in the band are amplified equally, without over-emphasis or loss.

The problem of equal amplification of all frequencies in the *video* band, 30 cycles to 4 megacycles, is much more difficult. It can be done, however, by proper compensating methods.

First, let us analyze the basic characteristics of the normal or uncompensated resistance-coupled amplifier to see just what must be compensated. We must know what factors determine the gain of the amplifier at any frequency, and why the gain starts to drop off at the high- and low-frequency ends of the range.

Simple Amplifier Circuit. In a single stage of amplification we have the input circuit, the amplifier tube and an output circuit. This is illustrated in Fig. 33-11.

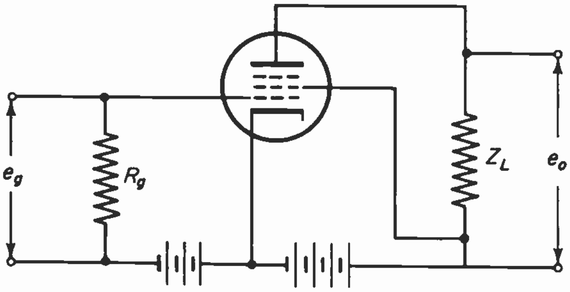

Fig. 33-11

An input voltage applied to the grid produces a variation in the plate current. This plate current, passing through the load resistor, develops an output voltage. If the circuit is properly adjusted, the input and output voltages have the same waveforms, but are of different amplitude. The gain of an amplifier is the ratio of the output voltage to the input voltage and depends on the tube and the output load involved.

Ideally, the gain of the amplifier would be in direct proportion to the value of the load. However, there are practical limits to the size of the output load that can be used. If the output load were a pure resistor, its value would be the same for all frequencies. But in a practical video amplifier there are capacitive and inductive components in the output load circuit which affect the value of the load impedance, Z_L. These result in different values for the output load as the frequency is varied.

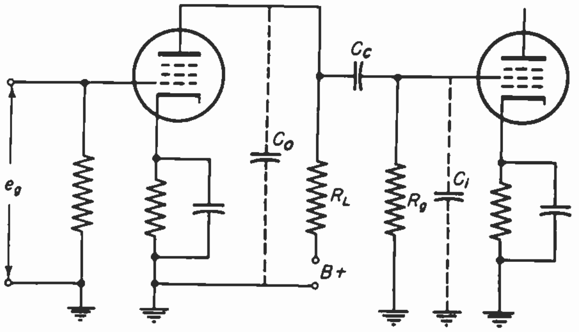

Fig. 33-12

Let's take a look at the resistance-capacitance coupled amplifier circuit which is illustrated in Fig. 33-12. The output load impedance, Z_L, consists of much more than the load resistor, R_L. It includes the effect of the coupling capacitor, C_c, and the input resistor, R_g of the next stage. Also, there are shunt capacitances which cannot be completely removed. These are in the output of the driving tube, including its stray wiring capacitance, and the input of the driven tube with any stray wiring capacitance in its circuit. The output capacitance of the amplifier is designated as C_o and the input capacitance of the next stage as C_i.

Limiting Factors of High Frequency Response. It is important to know how the circuit responds at the high- and low-frequency ends of the amplifier range. At high frequencies, the coupling capacitor C_c offers practically no reactance and may be considered a short circuit. This is indicated in Fig. 33-13*a*. An equivalent circuit for the load is a resistance shunted by a capacitance, as shown in Fig. 33-13*b*.

With C_c considered as a short circuit, the total load resistance R_t becomes the parallel connection of R_L and R_g. But, since R_g is much larger than R_L, R_t is practically equal to the smaller resistor, R_L. However, in parallel with this resist-

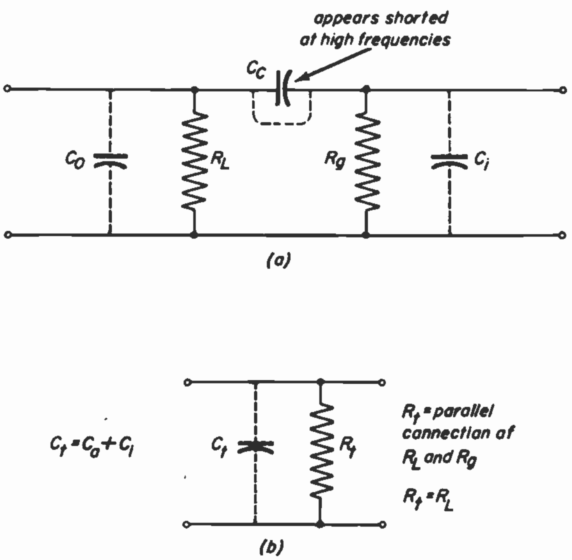

Fig. 33-13

ance is the total shunt capacitance, C_t, made up of the output and input capacitances, C_o and C_i. Here is the basis of the trouble. This capacitive reactive component results in a load which decreases as frequency increases. As the signal frequency increases, the capacitive reactance shunting R_L becomes a smaller value measured in ohms. Therefore, the total load impedance Z_L becomes smaller.

Since the gain of the amplifier is proportional to the value of the load impedance Z_L, the gain of a simple resistance-capacitance coupled amplifier is not constant at all frequencies, but is lower for the higher frequency components of the signal. It is the shunting effect of the inter-electrode and stray capacities that cause the gain to fall off.

The value of the load resistor R_L can be kept small compared to the reactance X_c of the shunting capacities. By this means, the total value of Z_L (R_L in parallel with X_c) cannot change as much as when R_L is large. Then, the gain at the high frequency end will not fall off as much.

For video amplifiers, the value of the load resistor R_L is kept quite small, about 1,200 to 4,000 ohms, so that the operating frequency can be fairly high before the capacitive shunting effect becomes appreciable. But when we lower the value of the load resistor, we also reduce the maximum gain which can be obtained from the amplifier. *We have to sacrifice gain in order to obtain the increased bandwidth needed for the video amplifier operation.*

The band of frequencies passed by the amplifier can be made still greater by inserting suitable inductances in the output circuit to compensate for the shunting effect of the stray capacitances. Methods for such high-frequency compensation will be studied later.

Limiting Factors of Low-Frequency Response. Now let's see how the uncompensated resistance-capacitance coupled amplifier behaves at the low-frequency end of the video band. We no longer have to worry about the shunt capacitances, but the coupling capacitor, C_c, becomes a limiting factor. This is shown in the simplified circuit of Fig. 33-14.

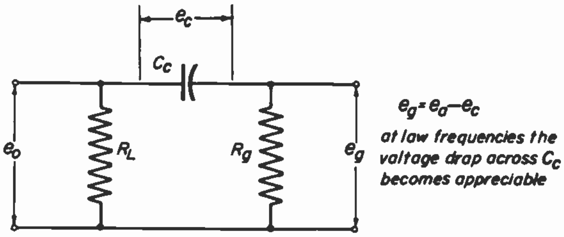

Fig. 33-14

For frequencies below 200 cycles, the reactance of the coupling capacitor becomes appreciable, with the result that only a part of the output voltage is passed on to the grid of the next tube. At the middle and high frequencies, the reactance of the coupling capacitor is negligible and the full voltage output of the plate circuit appears across the grid resistor of the following stage. But, as the frequency is decreased, the reactance of C_c is increased..

The reactance of the coupling capacitor, X_c (measured in ohms) is in series with the grid resistor, and the two constitute a voltage divider circuit. The part of the voltage available across the grid resistor becomes less as the frequency decreases. The voltage drop represents a loss in signal voltage.

It is the coupling circuit which affects gain at low frequencies. To obtain a good low-frequency response, the value of X_c must be as low as possible compared with the grid resistance. This is accomplished by using large values for the coupling capacitor and the grid resistor. Since the coupling capacitor appears as a short circuit at high frequencies, and the grid resistor is a high resistance in parallel with a much smaller plate load resistor, making C_c and R_g large does not affect the high-frequency response.

Of course, there are practical limits to the amount of increase of C_c and R_g. Increased physical size of the capacitor results in increased stray capacitance to ground, which affects the high-frequency response. Too large a grid resistor can result in motor-boating. Therefore, it is necessary to keep the values of C_c and R_g low enough to avoid these problems. For the coupling capacitor, a practical limit is about 0.1 mfd.

Since impractically large values of coupling capacitor and grid resistor would be required in the R-C coupled amplifier to pass the low frequencies properly, some means of compensation becomes necessary. These will be considered later.

We can obtain good low-frequency response by eliminating the coupling capacitor entirely. This is done in the direct-coupled circuit by coupling the plate of the first tube directly to the grid of the next tube. This circuit will be considered later.

D-C RESTORATION

33-5. Need for D-C Restoration. In the composite video signal output of the picture second detector, all the tips of the sync pulses are lined up at the same voltage level. The tops of the blanking pulses are also lined up, and variations in picture detail from black to white are represented by corresponding variations in voltage levels. The signal may be considered as being made up of two basic parts: the a-c component, which comprises all the variations in signal voltage and the d-c component, which is the voltage representing the average brightness. This is shown in Figure 33-15*a*.

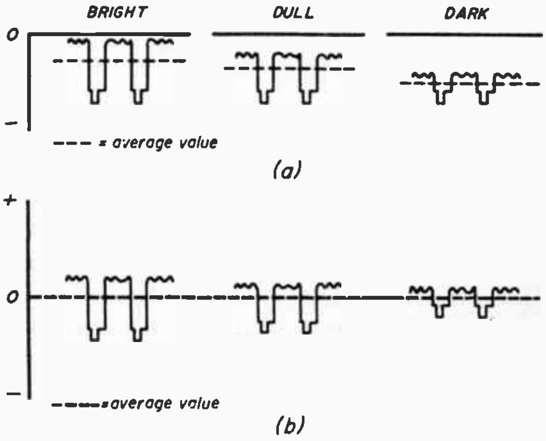

Fig. 33-15

When the signal is passed from one stage to another through the coupling capacitor, the d-c component of the signal is lost, with the effect shown in Fig. 33-15*b*, in which the three samples are positioned with the respective d-c averages (Fig. 33-15*a*) lined up on the horizontal reference line. This is acceptable so far as the amplifying function of the video amplifier is concerned, but at some point something must be done so that the tips of the sync pulses are again lined up. This is done by means of a d-c restorer circuit, which reinserts the missing d-c component. If this were not done, not only would the retrace lines be seen on all but the brightest scenes, but also the average brightness of all scenes would be the same, as presented on the tube face.

Diode d-c Restorer Circuit. While there are many types of d-c restorer circuits, the principle is shown in the simplified schematic of Fig. 33-16. All circuits develop an automatic bias in a manner similar to that of the grid leak bias action explained in Lesson 26.

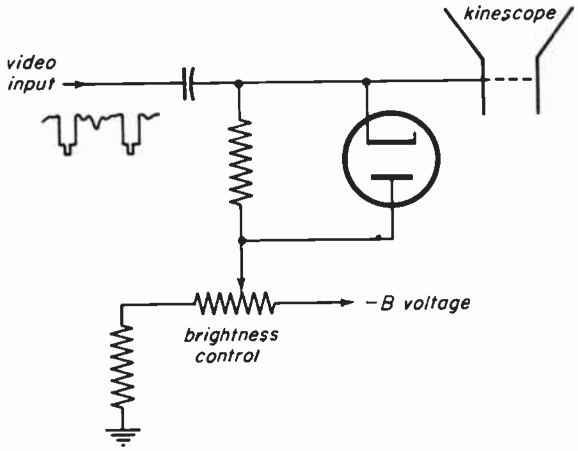

Fig. 33-16

The diode d-c restorer circuit consists of a diode, shunted by a high value of resistance, and a coupling capacitor, through which the signal is applied. The video signal output from an a-c amplifier, with the d-c component removed, is applied across the cathode and plate of the diode through the coupling capacitor. When the signal applied to the cathode is negative, the diode conducts. This charges the capacitor in proportion to the peak amplitude of the applied signal. While the signal is positive, the capacitor discharges slightly through the resistor shunting the diode. The voltage developed across the resistor is added to the bias voltage applied to the kinescope.

When the diode is conducting, the time constant, RC, of the capacitor and the diode resistance, is relatively small. Therefore, the capacitor charges quickly almost to the peak voltage of the signal. This peak voltage is the tip of the sync pulse. The shunting resistor is much larger in value than the resistance of the diode when it is conducting. Therefore, the time constant of the capacitor and the shunting resistor is sufficiently large that the capacitor discharges only slightly during the period when the diode is not conducting.

After several lines, the charge on the capacitor reaches a level corresponding to the maximum level of sync voltage. Therefore, each sync pulse adds only enough charge to make up for the small drop due to the slow discharge, mentioned below. This keeps the blanking and sync pulses lined up at practically unvarying levels. During the positive portion of the wave, when the diode does not conduct, the capacitor discharges slightly across the load resistor to develop a positive bias voltage. This bias is proportional to the peak value of the input signal. Therefore, it would be greatest for a bright picture, less for a dull picture and least for a dark picture. The positive bias voltage developed by the d-c restorer circuit subtracts from the normal negative bias applied to the kinescope grid by the BRIGHTNESS control.

Three distinct signals or inputs are applied to the kinescope grid circuit. These are: the normal negative bias, the automatic positive bias output of the d-c restorer, and the a-c variations of the video signal. The net effect is that of a variable bias which shifts the reference level of the video signal so that the amplitude of the sync pulses are clamped. The d-c component or brightness level of the picture is restored, in a form identical with Fig. 33-15*a*, with individual elements of the picture at the correct relative shades of black or white.

DIRECT-COUPLED AMPLIFIER

33-6. Comparison of A-C and D-C Amplifiers. – The basic difference between a-c coupled and d-c coupled amplifiers can be seen in the comparison of simplified circuits in Fig. 33-17.

In the a-c coupled amplifier, a coupling capacitor serves two purposes. It couples the a-c component of the signal from one stage to the next; and it separates the plate voltage of the first tube (normally positive as measured to the cathode of either tube) from the grid of the second tube (normally negative in respect to either cathode). Since the use of the coupling capacitor results in the loss of the d-c component of the signal, a d-c restorer circuit must later be added.

In the direct-coupled circuit, the coupling capacitor is eliminated. This places the plate of the first tube and the

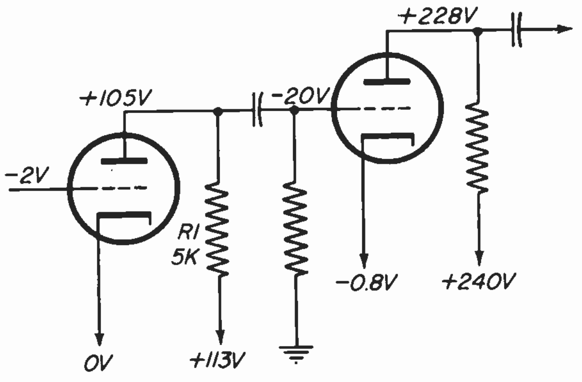

(a) a-c coupled

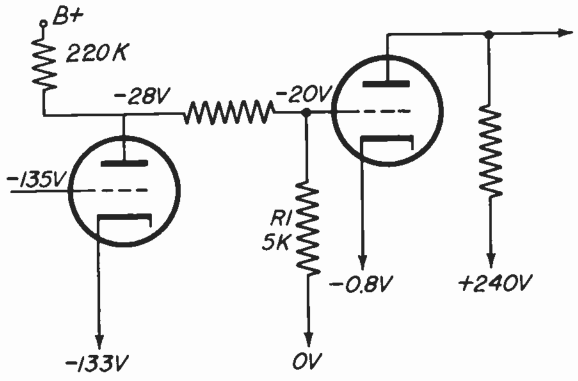

(b) d-c coupled

Fig. 33-17

grid of the second tube at approximately the same potential in respect to ground. But the plate of the first tube must be positive in respect to its cathode, and the grid of the second tube must be negative in respect to its cathode. Therefore the total voltage from the power supply for the direct-coupled circuit must be considerably higher, to provide proper operating voltages for the tube elements. The circuit passes both the a-c and d-c components of the signal. Thus a d-c restorer is not required and there is no low-frequency compensation problem. However, a higher voltage power supply is needed and the circuit is more critical toward tube functioning and minor circuit changes.

In the a-c coupled amplifier, the voltages applied to the tube elements are often taken from a voltage divider circuit in the power supply. In Fig. 33-17*a* the total range of voltage required is from −20 to +240 volts or 260 volts total. The complete range for the direct-coupled amplifier is from −135 to +240 volts, which is 375 volts, total.

In the a-c coupled amplifier, a change in voltage affects that particular circuit, but has little effect on other parts of the amplifier. In the direct-coupled amplifier, however, the amplifier circuit itself acts as a voltage divider. Therefore, any condition that affects the operating voltage in one part of the circuit causes a voltage change in all parts of the direct-coupled amplifier. This makes it much more difficult to localize a fault in the circuit.

Circuit Analysis of the Direct-Coupled Amplifier in a Typical Receiver. – With the coupling capacitor eliminated, the circuit must be carefully designed to provide correct operating voltages for the various elements of the amplifier tubes.

It is best to start voltage analysis at the second video amplifier, the point of highest voltage. Video amplifiers often use a duo-triode, 12AU7, for the first and second amplifier stages, one section of the tube for each stage. In the circuit shown (Fig. 33-17*b*), the highest voltage supplied to the amplifier from the low-voltage power supply is +240 volts, measured to ground. The voltage from the plate of the second video amplifier to ground is shown to be +228 volts. The difference, then, is the voltage drop through the resistor in the plate circuit.

The voltage drop through the plate circuit resistor depends on the plate current through the resistor. The proper plate current will flow through the circuit when the tube is good and the correct *relative* operating voltages are applied to cathode, grid and plate. For this reason, we must know what the correct relative operating voltages are, and how to apply those voltages to the cathode and grid of the tube.

The cathode of the amplifier stage must have a return to some point in the low-voltage power supply whose potential is lower than the plate potential. Otherwise, there could be no plate current at all. In Fig. 33-17*b* we find this point of connection to be at −0.8 volts. The voltage shown at the grid is −20 volts. The actual voltages measured to ground, as shown on the schematic, are: +228 volts at the plate, −0.8 volts at the cathode, and −20 volts at the grid. These are equivalent to the voltages (relative to the cathode, considered as 0 volts) of +228.8 volts at the plate, zero at the cathode and −19.2 volts at the grid. With these relative voltages at the tube elements, the correct plate current flows through the various dropping resistors in the plate and cathode circuit to maintain this voltage relationship. Any change in the plate current would cause a shift in the tube-operating voltages and in the circuit operation.

Now, let's check the voltage applied to the first video amplifier. If its plate is directly coupled to the grid of the second video amplifier, with only a small value of plate resistance intervening, and the grid of the second video amplifier must operate at −20 volts to ground, the plate of the first amplifier must be nearly the same potential as the grid to which it is connected. Actually, the reading is shown to be −28 volts, the difference being due to the voltage drop in the plate resistor. Now, how can we connect to the power supply to obtain these voltages, still maintaining the correct relative voltages on the cathode and grid of the first amplifier?

The best way to determine voltage distribution in the plate, cathode and grid circuits of the first amplifier is to find where they connect into the high and low points on the power supply, and draw an equivalent circuit showing all the resistances in the plate and cathode circuits, including the tube itself. This is illustrated in Fig. 33-18.

The plate current flows through all the resistances in the plate and cathode circuits, as well as through the tubes. The cathode-to-plate electron paths through the tubes become part of a voltage dividing network. The various resistance values are so chosen that the correct relative voltages will be applied to the tube elements.

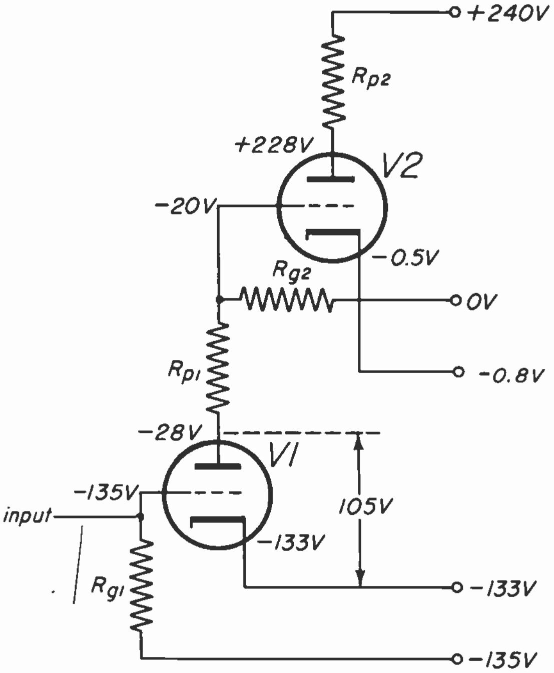

Fig. 33-18

As shown on the schematic, these voltages for the first amplifier, measured to ground are: −28 volts at the plate, −133 volts at the cathode, and −135 volts at the grid. The *relative* voltages, referred to the cathode, would be +105 volts at the plate, zero at the cathode, and −2 volts at the grid. These values give a plate current which, flowing through the dropping resistors, gives the correct relative voltages at the various elements of the amplifier tubes.

This method of analyzing voltage distribution through a direct-coupled video amplifier can be applied to most direct-coupled circuits used in TV receivers. In different models, different arrangements and values of resistors are used and different voltages appear at the various tube elements as measured to ground, but the *relative values* remain very much alike.

Direct-coupling eliminates the need for a d-c restorer circuit. However, frequency compensation networks must still be used.

FREQUENCY COMPENSATION OF THE VIDEO AMPLIFIER

33-7. High-Frequency Compensation Methods. – The shunting effect of interelectrode and stray capacitance due to circuit wiring may be compensated for, by inserting a suitable inductance in the plate circuit. The simplest method is to place a "peaking-coil" in series with the plate load resistor. This method is called "shunt-peaking", since the coil is effectively in parallel with the total shunt capacitance.

Another method is to connect a small inductance in series with the coupling capacitor, to form a "series-peaking" circuit. The shunt and series-peaking circuits can be combined to make use of certain advantages of each method.

a. **Shunt-peaking Method.** – The shunt-peaking coil, L_P, is inserted in the amplifier circuit in series with the load resistor, R_L, as indicated in Fig. 33-19.

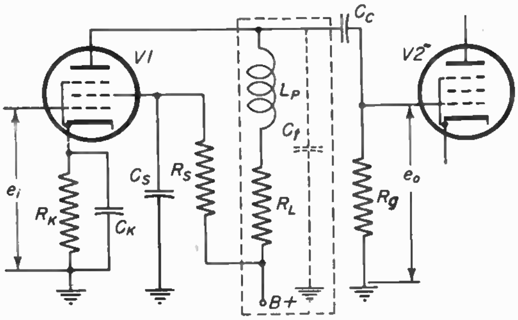

Fig. 33-19

We know that the effects of the coupling capacitor and of the grid resistor of the following stage are negligible at high frequencies. That leaves the load resistor in series with the peaking coil and the combination shunted by the capacitance, C_t, to make up the total load impedance of the circuit. This is shown in the equivalent circuit in Fig .33-20.

The peaking coil, in series with R_L, introduces practically no additional resistance. Therefore, L_p does not change the low-frequency response of the amplifier. As the frequency increases, the

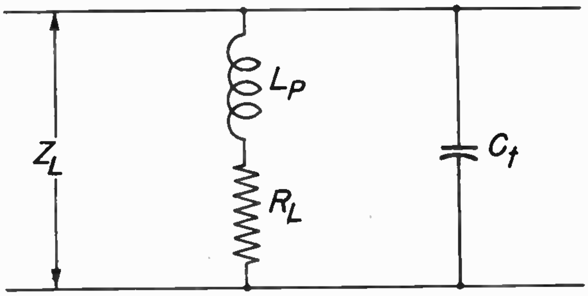

Fig. 33-20

inductive reactance of L_p measured in ohms increases, but this increase is balanced by a corresponding decrease in the capacitive reactance of C_t, to maintain the total impedance at a constant value. The result is a flat response or uniform gain for all frequencies for which this relationship holds true. This depends on the selection of proper values for R_L and L_p.

To obtain flat response up to the highest frequency needed, f_o (4 mc for a video amplifier), we insert a peaking coil with a reactance in ohms at the limiting frequency equal to half the value of the load resistor. This gives the frequency response curve below:

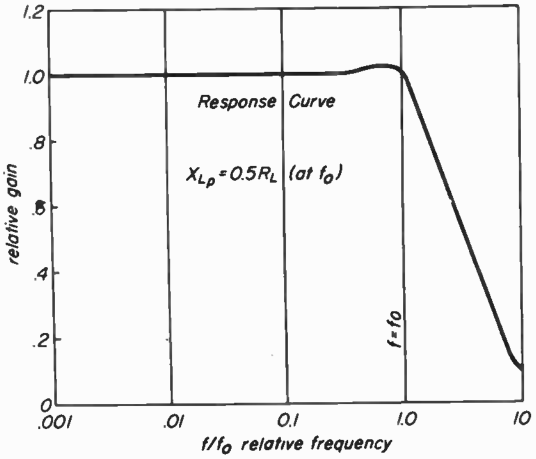

Fig. 33-21

This explanation of shunt peaking shows that inductance (peaking coils) are able to balance out the decrease in X_c, measured in ohms, which occurs as frequency increases. This is possible be-

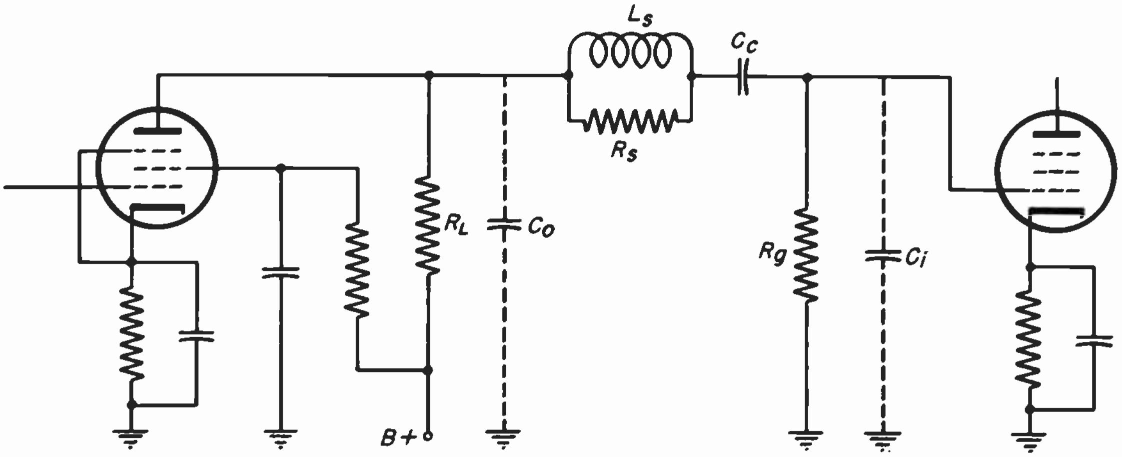

Fig. 33-22

cause X_L, measured in ohms, increases as frequency increases. This property of coils is also used in *series-peaking* high frequency compensation for video amplifiers.

b. **Series-peaking Method.** – High-frequency compensation by the shunt-peaking method works reasonably well, but it has some weaknesses. While the gain is uniform up to the upper frequency limit, the method does not result in a higher gain than was previously available for the low and middle frequencies of the uncompensated amplifier. Improved gain for these frequencies is obtained by using the series-peaking method.

By connecting inductance L_s of Fig. 33-22 in series with the coupling capacitor, we divide the total shunt capacitance into two parts. The lowered value of the load-circuit capacitance, which is now only C_o, permits the use of a larger load resistance. Therefore, a higher voltage is applied to the input circuit of the following tube. For the high frequencies, the effects of the coupling capacitor and the grid resistor are negligible, leaving as the input circuit for V2 a reactive voltage divider made up of the peaking coil, L_s, and the input capacitance, C_i, in series. This is shown in Fig. 33-23.

The value of L_s is such that in series with C_i it forms a resonant circuit at a frequency somewhat above f_o. At this resonant frequency a maximum current flows through C_i, and the voltage drop across it reaches a maximum. At frequencies f_o and below, which are lower than the resonant frequency of the peaking coil and the input-capacitance combination, the reactance of L_s varies in such a way as to compensate for any loss caused by the shunt capacitance, C_o, The net result is a reasonably flat response to the high-frequency end of the range, f_o, plus a higher gain over *all* frequencies than can be obtained by either the uncompensated or the shunt-peaked amplifier.

In order to prevent a high-frequency peak at the top end of the range, a loading resistor, R_s, is shunted across the series-peaking coil. This reduces the Q of the circuit to give the desired flat response. The value of R_s is usually from five to ten times the value of R_L.

c. **Combination of Shunt and Series Peaking.** Since high-frequency compensation is obtained by the use of shunt- and

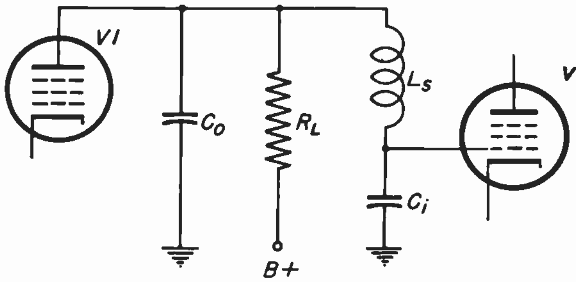

Fig. 33-23

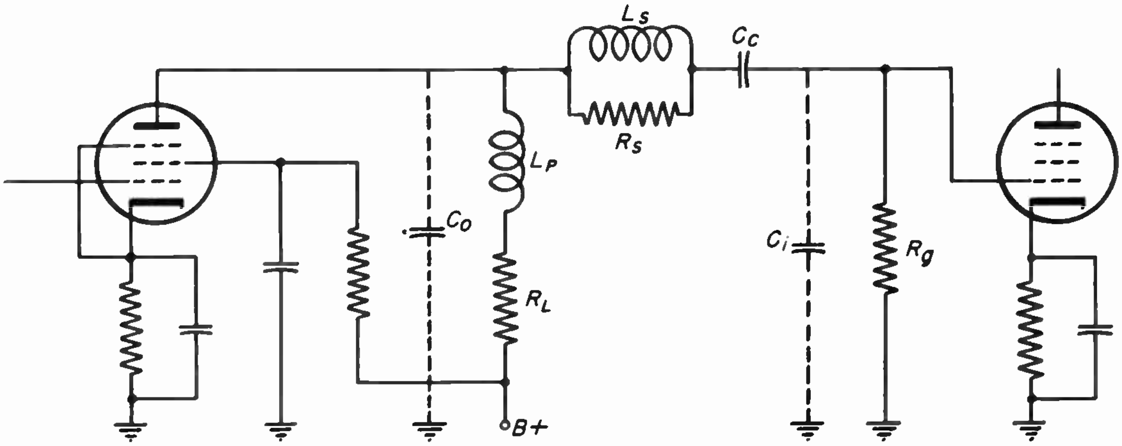

Fig. 33-24

series-peaking coils, the use of both should give even better results. The circuit for such a combination is shown in Fig .33-24.

This combination gives slightly better gain than series-peaking alone. Relative values of gain at the limiting frequency f_o are:

(1) uncompensated amplifier – .707
(2) shunt-peaking amplifier – 1.0
(3) series-peaking amplifier –1.5
(4) shunt- and series-peaking amplifier – 1.8

d. **"M-Derived" Filter-Coupling Circuit.** Some amplifier circuits used in many television receivers employ a compensation circuit known as an "M-derived filter coupled circuit". This resembles a shunt- and series-peaking circuit. The essential difference lies in the fact that the two compensating coils are placed in series, the output to the coupling capacitor being taken from the junction between the two coils, as shown in Fig. 33-25.

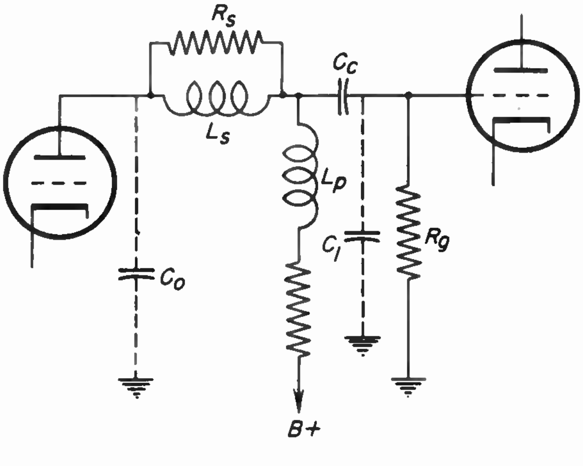

Fig. 33-25

This arrangement permits the use of a larger load resistor than the combination peaking circuit, and is less dependent on the distribution of the stray capacitances. The relative gain, as compared to an uncompensated amplifier, is 2.3.

Low-Frequency Compensation. – Since impractically large values of coupling capacitor and grid resistor would be required to pass the low frequencies properly, some means of low-frequency compensation becomes necessary.

The addition of a low-frequency compensation filter in series with the load resistor, as shown in Fig. 33-26, helps to a considerable extent. Additional improvement results from adjustment of the cathode circuit (cathode resistor, R_k, and bypass capacitor, C_k).

a. **Low-Frequency Compensation Filter.** Resistor R_f and capacitor C_f make up the low-frequency filter. It is in series with the load resistor. This combination increases the impedance of the plate load circuit for the low frequencies. The re-

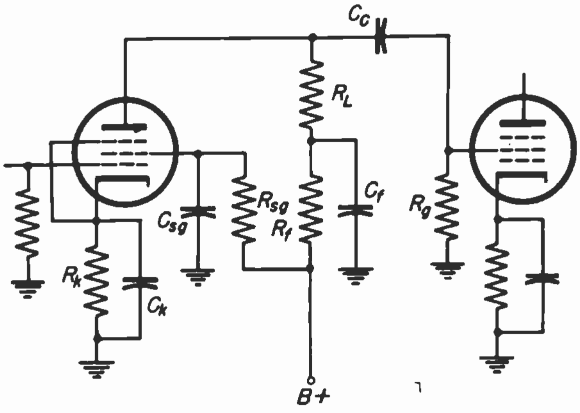

Fig. 33-26

sulting increase in gain at the low frequencies permits the use of smaller values for the coupling capacitor, C_c, and the grid resistor, R_g. The high-frequency response is not affected by the filter since, at these frequencies, filter resistor R_f is cut out of the circuit by the bypass action of shunting capacitor C_f.

The filter circuit has two other important functions. It serves to decouple the amplifier from the power supply circuit, preventing feedback from other stages, which might cause motorboating. It also compensates for a phase shift in the coupling circuit introduced by the voltage-divider circuit previously discussed (the coupling capacitor in series with the grid resistor). This phase shift will be discussed more fully in a later section.

Also, as in the case of the basic amplifier described in Lesson 26, the filter capacitor is a ground point for the signal. In fact, this explains how the low-frequency compensation is accomplished. At low frequencies, the reactance (X_c) of the capacitor is in series with the load resistance R_L. The total load impedance (Z_L) is increased. This balances the undesired effect of the coupling capacitor at low frequencies. At higher frequencies, the reactance of the filter capacitor is practically zero, and has no effect on the load impedance.

Best results are obtained when the time constants of the load resistor and filter capacitor and those of the coupling circuits are balanced, so that

$$R_L \times C_f = C_c \times R_g.$$

Since the coupling capacitor and the grid resistor are made as large as practicable, and the value of the load resistor depends on the highest frequency to be passed by the amplifier, only the value of the filter capacitor, C_f, is critical for proper low-frequency compensation. Best results are obtained when R_f is at least twenty times greater than the reactance of C_f at the lowest frequency (f_c) required to be passed.

b. **Additional Factors in Low-Frequency Response.** – In addition to the low-frequency compensating filter, two other factors affect the low-frequency response, but to a much lesser degree. The more important of these is the cathode bias filter of the amplifier. Of much less importance, although it does have some effect, is the screen-grid bypass capacitor, C_{sg}.

The value of the cathode resistor, R_k, is determined by the bias voltage required for the tube. To prevent degeneration, which would reduce amplification for the stage, the bypass capacitor, C_k, must be sufficiently large to provide a shunt path for the lowest frequency to be passed. In general, the value of the bypass capacitor should be such that its reactance at the limiting low-frequency is not greater than one-tenth the value of the cathode-bias resistor. To properly bypass frequencies as low as 30 cycles for the usual values of cathode bias resistor, the bypass capacitor must have a value of 100 microfarads or more. Best results are obtained when the time constants of both the cathode filter and the plate circuit filter are matched, so that $R_k \times C_k = R_f \times C_f$.

DISTORTION IN VIDEO AMPLIFIERS

33-8. It is essential that the video signal pass through the receiver without distortion. In addition to loss of high frequencies or low frequencies, distortion due to phase shift may appear. The resulting effect on the kinescope picture was shown in Fig. 33-3.

Phase Shift. – In any amplifier, capacitive or inductive reactance in either the grid or plate circuit will result in a small shift in phase between the input and output voltages, in addition to the normal reversal of polarity which occurs in amplifiers. This shift in phase is different for each of the various frequencies which the amplifier is required to pass.

Since the ear is not sensitive to phase distortion, it is not important in the case of an audio amplifier. In a video amplifier, however, an unequal shifting of the picture elements becomes noticeable as a distortion of the picture detail on the kinescope.

It is easier to see what happens to the signal if we consider phase shift in terms of the time delay in passing through the amplifier. The time delay, of course, is very small – not more than a fraction of a microsecond. But let's see what happens on the screen. A 16-inch tube has a picture width of about 12 inches. At 15,750 lines per second, the kinescope spot traces one line in 53.3 microseconds and takes an additional 10.2 microseconds for the retrace. It takes the spot 4.5 microseconds to travel 1 inch. A delay of even one microsecond shifts a picture element a distance of about 1/4 inch on the screen. Of course, if all frequencies are delayed by the same period of time, the entire picture is shifted a little and is not noticeable. But, in the case of *different* time delays for high and low frequencies, the picture is noticeably altered.

The phase relationships hold reasonably well for the middle range of frequencies in the uncompensated amplifier; but trouble is encountered at the high and low-frequency ends of the video band.

We are not too much concerned about phase shift at the high frequencies. The compensating methods for high-frequency response also correct phase shift at the high frequencies reasonably well. At the low frequencies, however, phase distortion can be a serious problem, since a very small phase shift measured in degrees can be a relatively large delay in time compared to the high frequencies.

As in the case of poor low-frequency response, the trouble is due to the presence of the coupling capacitor in the circuit. Here, too, the condition is much improved by eliminating the coupling capacitor and using a direct-coupled circuit.

It is fortunate that compensating methods which improve the gain of an amplifier at the high and low frequency ends of the video band, also improve the phase shift characteristics, though not to the same degree. Thus, by doing the utmost to obtain a reasonably flat frequency response for maximum gain over the entire band, we also arrive at a compensated amplifier in which the phase shift characteristic is not intolerable.

Amplitude Distortion. It is important to remember that for proper operation as an amplifier, a tube must be operating with the correct voltages applied to the plate, grid, and screen grid, in respect to the cathode. With the correct voltages the input voltage waveform is faithfully reproduced in the output. If something changes the operating voltages, for example if the plate voltage becomes too low or the grid bias becomes too large, the tube may be driven past the plate current saturation point, or below the cut-off bias point, and the waveform of the output voltage becomes distorted. In this case the peaks of the video signal are clipped or compressed. Since this amounts to an alteration of the amplitude of the signal, it is known as amplitude distortion. One important result of amplitude distortion is the loss of sync. The amplitude of the sync pulses is the first factor affected by amplitude distortion because the sync pulses are at the peaks of the video waveform.

Compensating methods applied to the circuit to correct high or low frequency response or phase shift must not alter the operating voltages applied to the tube

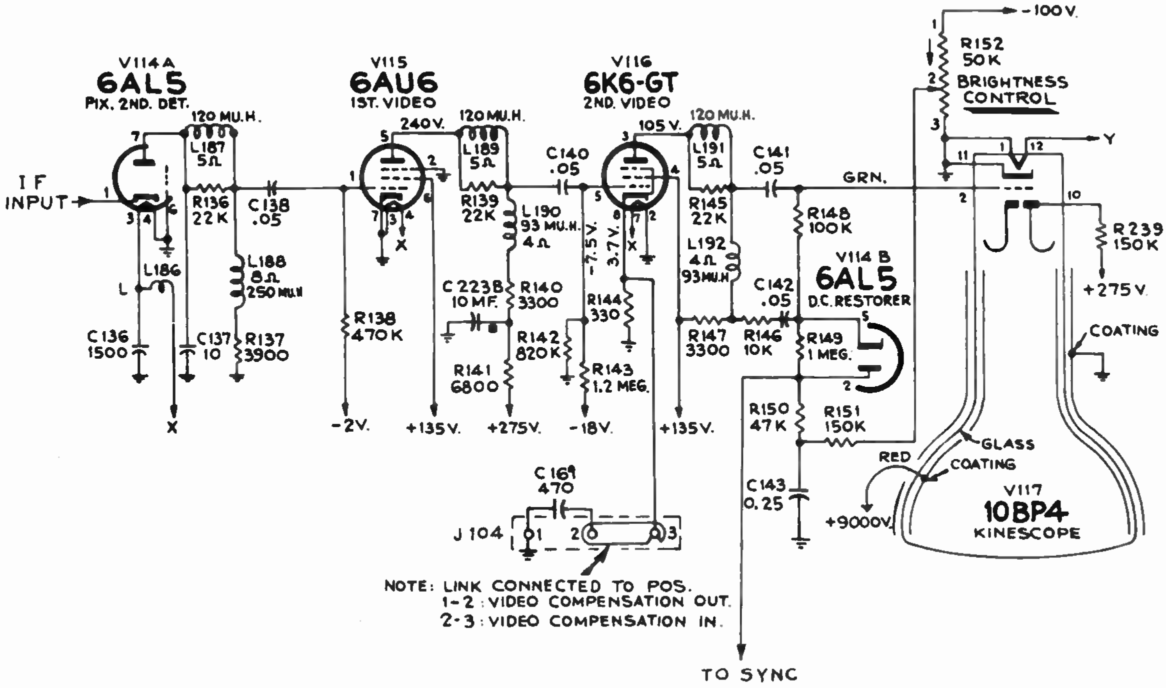

NOTE: LINK CONNECTED TO POS.
1-2 : VIDEO COMPENSATION OUT.
2-3 : VIDEO COMPENSATION IN.

Fig. 33-27

elements. Also, circuits and elements external to the video amplifier, in the power supply or drawing current from the power supply, must be sufficiently stable so that the operating voltages of the video amplifier are not changed enough to cause distorted amplification.

Stable operating voltages are not difficult to maintain in the resistance coupled amplifier circuit; but in the direct coupled amplifier, the problem is somewhat more difficult. A slight change anywhere in the circuit might upset the operating voltages of all parts of the circuit.

TYPICAL A-C COUPLED VIDEO AMPLIFIER

33-9. – The requirements for a video amplifier can be met by the use of any one of a number of amplifier circuits. In some cases, the circuits to be considered in this section have resulted from improvement and development of earlier types; in other cases, one method of coupling has been found to be more efficient in particular receivers. We will consider several typical circuits, weighing their advantages and disadvantages in different types of receivers. The resistance-capacitance coupled circuit of Fig. 33-27 has been used in many receivers, and in modified form in some projection-type receivers. After discussing this circuit we will study the direct-coupled circuit of Fig. 33-28; the circuit of Fig. 33-29, which is direct-coupled from the detector and capacitive-coupled between video stages; and the single-stage amplifier of Fig. 33-30.

Basic Circuit Analysis. – The circuit is basically that of the compensated a-c amplifier explained in Sections 4 and 7. To simplify circuit analysis, the functions of the various components are listed on the next page. Functions of those that differ from the basic circuit are then explained.

FUNCTION OF COMPONENTS

PART NO.	FUNCTION	REMARKS
	PICTURE SECOND OUTPUT DETECTOR	
V114A	Picture second detector	One-half of a 6AL5 duo-diode rectifies the picture i-f to give the composite video signal.
R137 3900 ohms	Plate load resistor	Develops a negative signal output of the same polarity as must be applied to the kinescope grid.
L188 (8 ohms 250 µh)	Shunt-peaking coil	Balances out shunt capacity for the high frequency, to give proper response characteristics, as described in text.
L187 (5 ohms 120 µh)	Series-peaking coil	The coil is wound on its shunting resistor. See text for full discussion
R136 (22K)	Shunting resistor for series-peaking coil	Prevents excessive peaking at the high frequency end of the video band.
C137 (10 mmf)	Plate filter capacitor	Filters the intermediate frequencies from the composite video.
C138 (.05 mf)	Coupling capacitor	Couples output of picture second detector to grid of first video and blocks d-c. (Note the relatively large value, to maintain low-frequency response.)
	FIRST VIDEO AMPLIFIER	
V115	First video amplifier	The operating voltages of the 6AU6 are such that any noise voltages of greater amplitude than the sync pulses will drive the grid to cutoff. This causes a noise-limiting effect.
R138 (470K)	Input grid resistor	The input video signal is developed across this resistor and applied to the grid of the first video amplifier. Prevents tube from blocking. The grid operates at a bias of -2 volts from the power supply, with the cathode of the tube grounded.
R140 (3300 ohms)	Plate load resistor	Determines gain of the amplifier at middle of the video band. That is, the "normal" (uncompensated) gain.
L190 (4 ohms 93 µh)	Shunt-peaking coil	See text for discussion of shunt peaking.
L189 (5 ohms 120 µh)	Series-peaking coil	Same as in the previous stage.
R139 (22K)	Shunting resistor for series-peaking coil	Same as in the previous stage.
C223B (10mf)	Plate filter capacitor	One section of an electrolytic. Acts as ground return for the video signal. Part of filter compensating circuit for low-frequency compensation.
R141 (6800 ohms)	Plate filter resistor	Acts with the plate filter capacitor to form the plate filter compensating circuit for low frequencies.
C140 (.05 mf)	Coupling capacitor to second video amplifier	Same as coupling capacitor to first video amplifier.
	SECOND VIDEO AMPLIFIER	
R142 (820 K)	Grid resistor	The grid resistor is part of a voltage divider network in which R143 connects to the -18 volt point on the power supply divider. The result is that -7.5 volts to ground is applied to the grid of the tube.
R145 (1.2 meg)	Forms voltage divider with R142	
V116	Second video amplifier	6K6-GT, power pentode. In addition to the negative bias applied to the grid, the tube is self biased by the voltage drop across a resistor in the cathode circuit.
R144 (330 ohms)	Cathode resistor	Supplies self bias voltage and some degeneration.
C161 (470mmf)	High frequency compensation in cathode circuit	May be connected in or out of the circuit by means of link on J104. Explanation is given later.

L191 (5 ohms 120 μh)	Series-peaking coil	Same as in previous stage.
R145 (22K)	Shunting resistor for series-peaking coil	Same as in previous stage.
L192 (4 ohms 93 μh)	Shunt-peaking coil	Same as in previous stage.
R147 (3300 ohms)	Plate load resistor	Connects to the screen grid voltage supply line, +135 volts, since this stage is designed to operate at a rather low plate voltage.

The d-c restorer and input circuit to the kinescope will be analyzed later.

The second video amplifier operation is sufficiently different from the basic circuit previously explained to merit further discussion. When a resistor is connected in the cathode circuit without being bypassed by a suitable value of capacitance, some degeneration or loss of gain occurs at all frequencies. This is the situation in the cathode circuit of the second video amplifier. Remember that in the first video amplifier the cathode was grounded.

Connecting a capacitor across the cathode resistor R144, corrects the degeneration in whole or in part. A large capacitor, of about 100 mf or more, would be needed to bypass all frequencies, including the lows. However, in the circuit schematic only a small capacitance is shown, C161 (470 mmf). This can be connected in or out of the circuit by means of a link. With the capacitor out of the circuit, there is some degeneration or reduction of the maximum possible gain of the stage at all frequencies. When capacitor C161 is connected in the circuit, it bypasses only the high frequencies. Degeneration at these frequencies is thus reduced, and there is some gain in high frequency response.

In some areas, such video compensation is desirable. In other areas there may be excessive high-frequency peaking, which appears on the kinescope as a white line closely following a black figure, particularly at high contrast settings. High-frequency peaking is normally controlled at the transmitter end, in the video amplifier of the camera. If the picture from most stations looks better with the link closed, the link is placed in that position (2-3), but if excessive peaking shows up, the link is left open (1-2). This link was used only in TV receivers of the 8TS30 type. Improvements at the transmitter end have made such high-frequency compensation adjustment unnecessary in modern receivers. (In the 630 type of receiver, there is a link in the same position on the chassis, but it is used for another purpose.)

D-C Restorer and Input Circuit to the Kinescope. – The d-c restorer circuit and input to the kinescope are basically the same as that explained in Section 33-5, except that certain filter circuits have been added. The circuit analysis is as follows:

FUNCTION OF COMPONENTS

PART NO.	FUNCTION	REMARKS
	D-C RESTORER	
V114B	D-C restorer diode	Utilizes one half of a 6AL5. The input signal is the video voltage across the plate load resistor, R147
R146 (10K)	Isolating resistor	Prevents loss of the high frequency components of the video signal.
C142 (.05 mf)	Input capacitor	Couples a portion of the video signal to the d-c restorer.
R149 (1 meg)	Shunt resistor	Shunts the cathode and plate of the diode. Operates with capacitor, C142, to develop the positive d-c restorer voltage.

INPUT TO KINESCOPE

C141 (.05 mf)	Coupling capacitor	Couples a-c component of compensated video signal to the kinescope grid.
R148 (100 K)	Isolating resistor	Prevents loss of high frequencies through the d-c restorer circuit.
R150 (47 K)	Filter resistor	Acts with C143 and R151 to filter a-c component of signal at plate of d-c restorer diode to ground, thus removing it from the input grid circuit of the kinescope. The signal at the plate of the diode serves as the input source for the sync circuits.
C143 (0.25 mf)	Filter capacitor	Ground return for filter circuit.
R151 (150 K)	Filter resistor	Keeps a-c component of the video and sync signals out of the BRIGHTNESS control circuit.
R152 (50 K)	BRIGHTNESS control	Potentiometer adjustment to supply a maximum bias of -100 volts to the kinescope grid.

The signal applied to the kinescope grid is made up of three components:

a. The steady bias voltage from the setting of the BRIGHTNESS control.

b. The reinserted d-c reference level from the d-c restorer circuit. This positive voltage is obtained from a portion of the video output of the second video amplifier. To prevent loss of high frequencies through the d-c restorer, the input signal to the restorer is taken below the peaking coil and through an isolating resistor.

c. The compensated a-c component of the video signal. This signal is applied through the coupling capacitor, and is blocked from the d-c restorer circuit by an isolating resistor.

The positive voltage of the reinserted d-c component subtracts from the negative voltage of the normal bias to establish a new reference level for the compensated video signal. This clamps all the sync pulses at the same level, and re-establishes an average brightness level. The filter circuits noted are necessary to prevent loss of high frequencies, or to eliminate a-c variations from the grid biasing circuit.

TYPICAL DIRECT-COUPLED VIDEO AMPLIFIER

33-10. The direct-coupled video amplifier circuit shown in Fig. 33-28 is used in a number of television receivers. With some modification in individual models, it is the basic circuit used in most direct-coupled video amplifier stages.

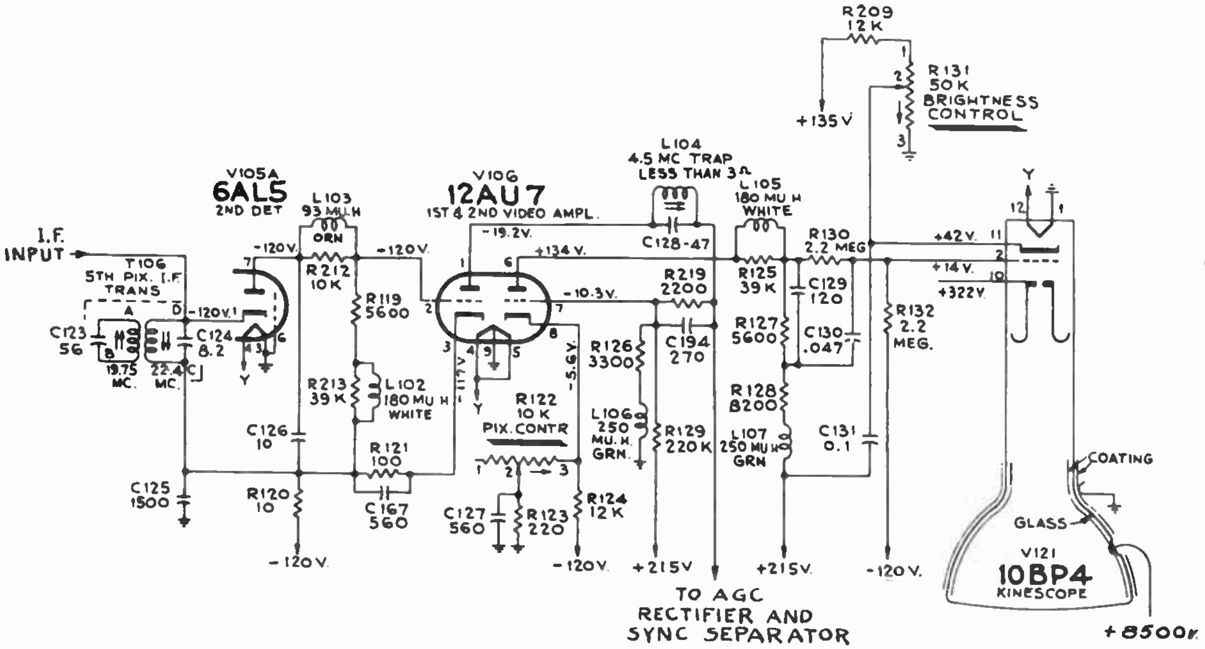

Fig. 33-28

Circuit Analysis. With no coupling capacitors, and the plate of one tube at approximately the same potential as the grid of the next, care must be taken that correct operating voltages are provided for the various elements of the amplifier tubes. It should be remembered that a faulty component can radically change a few operating voltages directly, and many others indirectly, but just as seriously. Therefore a clear understanding of the components of the circuit and their function is essential.

FUNCTION OF COMPONENTS

PART NO	FUNCTION	REMARKS
		INPUT TO FIRST VIDEO AMPLIFIER
V105A (6AL5)	Picture second detector	Note that the voltage to ground at the plate of the second detector, -120 volts, is the same as at the grid of the first video amplifier.
C126 (10 mmf)	Plate filter capacitor	Filters i-f from the composite video signal
L103 (93 µh)	Series-peaking coil	Part of high-frequency compensating circuit.
R212 (10 K)	Shunting resistor for series-peaking coil	The coil is wound on the resistor. Resistor broadens resonance curve of coil, and prevents excessive peaking of the high frequencies.
R119 (5600 ohms)	Load Resistor	Develops negative composite video signal output.
L102 (180 µh)	Shunt-peaking coil	Part of high-frequency compensating circuit.
R213 (39 K)	Shunting-resistor for shunt-peaking coil	Broadens peaking-action of the shunt-peaking coil. Coil is wound directly on the resistor.
R121 (100 ohms)	Cathode biasing resistor	Provides self-bias for the cathode-grid circuit of the first video amplifier.
C167 (560 mmf)	Cathode filter capacitor	Bypasses the high frequencies to counteract some of the degeneration resulting from cathode resistor, R121. This gives additional high-frequency compensation.
		FIRST VIDEO AMPLIFIER
V106A (12AU7)	First video amplifier	The circuit is direct-coupled, with grid return going to the most negative point in voltage supply, -120 volts. Although all voltages to ground are negative, voltages relative to cathode are: grid -3 volts, and plate +97.8 volts.
L104 (less than 3 ohms)	4.5 mc trap	Acts with C128 as a trap to eliminate the 4.5 mc beat frequency between the picture and sound carriers, which may appear in the output of the picture second detector.
C128 (47 mmf)	Part of 4.5 mc trap	See above.
R219 (2200 ohms)	Voltage-dropping and filter resistor	Resistor element in direct-coupling between plate of first and grid of second video. Isolates take-off point for sync. circuits from grid of second video amplifier.
C194 (270 mmf)	Filter capacitor	Passes high-frequency components of the video signal across R219. Acts as part of filter circuit to partially separate the video signal from the sync signals which are passed along to the sync circuits.
R126 (3300 ohms)	Plate load resistor	Determines amplifier gain for middle range of frequencies.
L106 (250 µh)	Shunt-peaking coil	Serves usual function of high-frequency compensation. Since it is necessary to separate high frequency components from the sync circuit takeoff, the usual series-peaking coil is not included in the plate circuit of the first video amplifier.
R129 (220 K)	Plate voltage dropping resistor	Acts as isolating resistor and voltage dropping resistor, connecting to the +215 volt tap on the power supply.

SECOND VIDEO AMPLIFIER

V106B (12AU7)	Second video amplifier	Operating voltages are dependent on matching the -10.3 volts on the grid. (determined by the requirements of direct coupling to the first video amplifier). Although grid and cathode voltages to ground are negative, voltages relative to cathode are: grid -4.7 volts and plate + 139.6 volts.
R122 (10 K)	PICTURE contrast control	Controls the voltage applied to the cathode. This adjusts the cathode-grid bias to determine the gain of the stage and, therefore, the picture contrast setting.
R123 (220 ohms)	Cathode resistor	Determines the minimum cathode bias with the picture contrast control set at (3), completely out of the circuit.
C127 (560 mmf)	Cathode filter capacitor	Provides partial high-frequency compensation in the cathode circuit.
R124 (12 K)	Voltage divider resistor in cathode circuit	Part of voltage divider made up of R124 (12K) connected to the -120 volt tap, on power supply, the PICTURE contrast control (maximum 10K), and R123 (220 ohms) connected to ground.
L105 (100 μh)	Series-peaking coil	Has usual function of high-frequency compensation.
R125 (39K)	Shunting-resistor for series-peaking coil	Has usual function of preventing excessive high-frequency peaking.
R127 (5600 ohms)	Part of plate load resistance	Serves as part of coupling circuit to kinescope grid. The complete circuit is explained later.
C129 (120 mmf)	Filter capacitor	Bypasses the a-c component of the video signal around load resistor R127.
R128 (8200 ohms)	Part of plate load resistance	The compensated video signal develops across this load resistor in series with the shunt-peaking coil, L107.
L107 (250 μh)	Shunt-peaking coil	Performs the usual function of high-frequency compensation.

INPUT TO KINESCOPE

R130 (2.2 meg.)	Part of voltage divider	Serves as part of voltage divider network to obtain the proper voltage at the kinescope grid.
R132 (2.2 meg.)	Part of voltage divider	Acts with R130 to form voltage divider.
C130 (.047 mf)	Coupling capacitor	Couples a-c component of compensated video signal to the kinescope grid.
C131 (0.1 mf)	By-pass capacitor	Serves as return circuit of the a-c component of the video signal from the kinescope cathode.
R131 (50 K)	BRIGHTNESS control	Potentiometer controlling the bias voltage applied to the cathode of the kinescope.
R209 (12 K)	Limiting resistor	In series with the BRIGHTNESS control to limit the cathode bias.

Voltage Analysis. – Voltage analysis and voltage distribution for this direct-coupled video amplifier is similar in many ways to that of the simple direct-coupled circuit explained in Section 33-6. Additional stability is gained by separating the plate currents of the two tubes. The plate-cathode circuit for the second video amplifier has its B+ source at the +215 volt tap on the power supply, with the cathode circuit returning to ground. There is a connection from the cathode circuit to the -120 volt tap on the power supply, but this is only to obtain cathode bias through a suitable voltage divider. The plate-cathode circuit for the first video amplifier also has its B+ source at the +215 volt line of the power supply, but the voltage at the plate is dropped to -19.2 as the result of a voltage divider arrangement similar to that explained in Section 33-6. The negative voltage at the plate results from the fact that the cathode return connects to the -120 volt power supply tap, and the tube itself is part of the voltage divider network.

Separation of the plate currents of the two tubes enables the plate current of the second video amplifier to be varied without affecting the operation of the first video amplifier. This permits the installation of the PICTURE contrast control in the cathode circuit of the second video amplifier. This control varies the operating bias between cathode and grid of the second video amplifier, varying the gain and, therefore, the contrast between the light and dark elements of the picture.

The 4.5-mc Trap. – In the plate circuit of the first video amplifier, a 4.5-mc trap, L104 shunted by C128, is used.

If the picture i-f tuned circuits and trap circuits are properly aligned, there should be adequate separation of the sound and picture carrier signals at the output of the second i-f amplifier stage. However, if the separation is not complete (for example, when the FINE TUNING control is not adjusted exactly at the point of maximum sound), it is possible for a 4.5-mc signal, the beat frequency between the picture and sound carriers, to appear in the output of the picture second detector. If not removed, this will show up as an interfering signal in the kinescope picture. The inclusion of this 4.5-mc trap, in the video amplifier, makes possible greater leeway in adjustment of the FINE TUNING control.

The 4.5-mc sound trap is checked by tuning to the station that gives the strongest signal, then detuning the receiver from the correct fine tuning point. If a 4.5-mc beat interference appears in the picture, adjust L104 until the beat is eliminated.

It is of interest to note that in newer receivers, this trap is not adjustable in the field.

Coupling Circuit to the Kinescope Grid. – Although a d-c restorer is not needed in the direct-coupled amplifier, a special circuit arrangement is necessary to obtain correct biasing and operating voltages at the kinescope. For example, the kinescope first anode must be about 300 volts more positive than the grid. If the kinescope grid were at the same potential as the plate of the second video amplifier, +134 volts, a kinescope first anode voltage of +434 volts would be required. The special circuit eliminates the need for a higher voltage output from the low-voltage power supply.

The a-c and d-c components of the composite video signal output of the second video amplifier are separated and passed on through different paths to the kinescope grid. Capacitor C129 bypasses the a-c component around resistor R127. The charge on this capacitor represents the d-c component of the signal. The a-c component develops across load resistor R128 in series with shunt-peaking coil L107. This a-c signal is passed on to the kinescope grid through a coupling capacitor C130, with capacitor C131 serving as a return to the kinescope cathode. The d-c component, developed across resistor R127 and charging capacitor C129, is applied to the kinescope grid through the voltage divider network R130 and R132.

The voltage divider network is needed to obtain the correct d-c voltage at the kinescope grid, in relation to the kinescope first anode and the second video amplifier plate. The bottom end of the voltage divider is connected to the -120 volt tap of the power supply. With the kinescope grid connected to the junction point of these two resistors, the voltage at the grid, measured to ground, would not be the same as the voltage at the second video amplifier plate, but substantially lower.

Since the voltage divider is connected between potential points of +134 and -120 the mid-point between these two values is +7 volts to ground. This gives approximately the correct relationship to the +322 volts at the kinescope first anode. The value shown on the schematic +14 volts. The difference is the charge on capacitor C129, which represents the d-c component of the video signal. The biasing level between the grid and cathode of the kinescope is set by adjusting the BRIGHTNESS control (R131) to vary the voltage at the kinescope cathode.

ADDITIONAL VIDEO AMPLIFIER CIRCUITS

33-11. – Two types of video amplifier circuits not described previously are shown in Figs. 33-29 and 33-30. One is a single stage amplifier feeding its output to the kinescope cathode. The other combines direct-coupling from the detector and capacitive coupling between the video stages in a two-stage amplifier, which is explained in the next section.

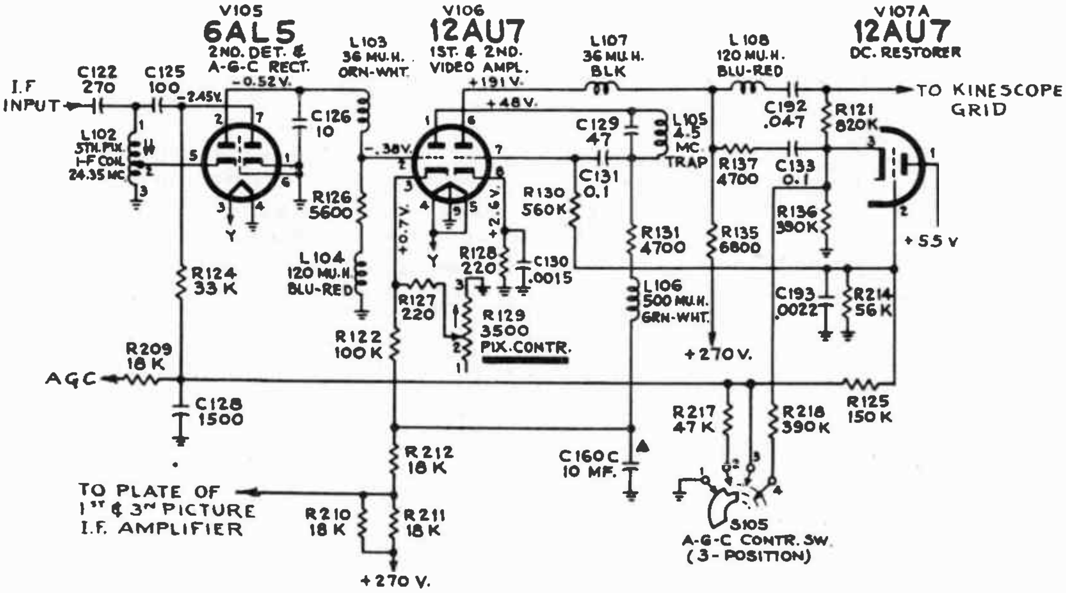

Fig. 33-29

Circuit Analysis. – One feature of this circuit is the fact that the most negative point of the power supply is at ground potential. No negative voltages from the power supply can be applied to the tube elements. (Refer to Fig. 33-29).

FUNCTION OF COMPONENTS

PART NO.	FUNCTION	REMARKS
	OUTPUT OF PICTURE SECOND DETECTOR	
V105 (6AL5)	Picture second detector	One section of a 6AL5. (The other section is used as the AGC rectifier.) Contact potential and rectification of signal voltage gives a minimum voltage of -0.52 volts at the plate of the diode picture second detector.
C126 (10 mmf)	Plate filter capacitor	Bypasses i-f component of signal to ground.
L103 (36 µh)	Series-peaking coil	High-frequency compensation.
L104 (120 µh)	Shunt-peaking	High-frequency compensation.
R126 (5600 ohms)	Plate load resistor	The negative-going composite video signal including the d-c component is developed across the load resistor in series with the shunt peaking coil. Since this circuit is also the grid circuit for the first video amplifier, a minimum bias voltage of -0.38 volts to ground appears at the grid of the video amplifier.
	FIRST VIDEO AMPLIFIER	
V106 (12AU7)	First video amplifier	The first video amplifier operates in such a way that the tips of the sync pulses are kept close to cutoff at all signal levels. This is explained later.
R127 (220 ohms)	Cathode resistor	Limiting resistor in cathode circuit to ground. Acts as part of a voltage divider to determine voltage applied to the cathode.
R129 (3500 ohms)	PICTURE contrast control	Varies the cathode voltage, thus varying the negative bias between cathode and grid. This adjusts the gain characteristics of the stage and, therefore, the picture contrast.
R122 (100 K)	Part of voltage divider in cathode circuit	Acts with R127 and R129 as voltage divider to determine voltage applied to the cathode.
L105	Part of 4.5 mc trap	Acts with C129 as a 4.5-mc trap to eliminate any 4.5-mc beat frequency from picture and sound carriers that get into the video stage.

C129 (47 mmf)	Part of 4.5-mc trap	Acts with L105 as 4.5 mc trap.
R131 (4700 ohms)	Plate load resistor	Acts with shunt-peaking coil to develop output video signal for first video amplifier stage.
L106 (500 μh)	Shunt-peaking coil	High-frequency compensation.
C160 (10 mf)	Filter capacitor	Acts as video return to ground. One section of an electrolytic capacitor. Acts with R212 as low-frequency compensation filter.
R212 (18 K)	Plate filter resistor	In addition to serving as plate filter resistor for low-frequency compensation, it is part of the voltage divider providing cathode voltage.
R 210 (18 K) R 211 (18 K)	Dropping resistors	These two resistors, connected in parallel, form a 900 ohm dropping resistor. This is in a circuit common to both the first and third i-f and the first video plate voltage sources. The purpose and action is explained later.
C131 (0.1 mf)	Coupling capacitor	Couples compensated video signal to grid of the second video amplifier.

SECOND VIDEO AMPLIFIER

V106B (12AU7)	Second video amplifier	Conventional circuit, self biased.
R130 (390 K)	Grid resistor	Acts as grid resistor to apply video signal to the grid of the second video amplifier. Since the resistor is grounded, the grid is at ground or zero potential.
R128 (220 ohms)	Cathode resistor	Acts as self-biasing resistor developing a normal bias of +2.6 volts to ground. The grid-cathode bias is, therefore, -2.6 volts.
L107 (36 μh)	Series-peaking coil	High-frequency compensation.
R135 (6800 ohms)	Plate load resistor	Develops video signal output of the second video amplifier stage.
L108 (120 μh)	Series-peaking coil	Additional series-peaking coil for added high-frequency compensation.
C192 (.047 mf)	Coupling capacitor	Couples compensated video signal to the kinescope.

D-C RESTORER

V107A (12AU7)	D-c restorer	One section of a 12AU7 serves the dual function of sync separation and d-c restorer. The grid acts as the plate of the d-c restorer circuit.
R137 (4700 ohms)	Isolating resistor	Prevents loss of high frequencies through the d-c restorer capacitance to ground.
C133 (0.1 mf)	Coupling capacitor	Coupling capacitor to the d-c restorer.
R136 (390 K)	Shunt resistor for d-c restorer	Develops d-c restorer voltage to be applied to the kinescope grid as the restored d-c component of the video signal.
R121 (820 K)	Isolating resistor	Prevents loss of high frequencies through the d-c restorer capacitances to ground.
R125 (150 K)	AGC bias resistor	Couples some AGC voltage for high level signals to the sync separator d-c restorer grid.
R218 (390 K)	Shunting resistor	Reduces value of shunting resistance for the d-c restorer circuit for low signal levels. This resistor is connected into the circuit by the setting of the AGC switch in position 3, in which position AGC is completely eliminated.

Video Amplifier Circuit. – The first video amplifier of the circuit in Fig. 33-29 is sufficiently different from circuits previously described to merit additional discussion. This stage operates with a plate voltage ranging from about 48 to 125 volts, depending on the signal strength and the setting of the contrast control, R129. Appropriate variation of the source of plate voltage is desirable in order that the tips of the sync pulses are kept close to cutoff at all signal levels.

Variation of the plate voltage source involves an automatic tie-in with certain of the picture i-f stages. The bias of the first, second and third picture i-f stages varies in accordance with AGC, which depends on signal strength. This is a normal arrangement. In addition, however, the plate source voltage for the first and third picture i-f stages is supplied through a 9,000-ohm dropping resistance. The d-c plate currents of these i-f stages, which vary in accordance with the variations in signal strength, pass through this resistance and cause a varying voltage drop across it.

This signal-varied voltage is filtered and becomes a part of the plate voltage source for the first video amplifier. It also is a part of the voltage applied to the cathode voltage-divider network. Thus there is an automatic adjustment of the plate voltage, and also of the cathode bias of the first video amplifier, with changes in strength of the signal in the picture i-f stages. This keeps the tube operating so as to hold the tips of sync pulses in the composite video signal close to cutoff, compressing any noise pulses.

D-C Restorer Circuit. – The basic d-c restorer circuit of the video circuit in Fig. 33-29 is similar to that previously described. However a triode is used instead of a diode, the grid of the tube acting as diode plate for d-c restorer action. The tube serves the dual function of d-c restorer and sync separator.

There is a tie-in with the AGC circuit through resistor R125 (150 K) in the grid circuit. A negative AGC voltage, varying with signal strength, is applied to the grid of the tube. While this has some effect on d-c restoration, its primary purpose is that of improved sync separation. For weak signals, the AGC switch is set at position 3. In this position AGC is completely removed with the grounding of the AGC side of resistor R125. At the same time R218 (390 K) is connected into the cathode circuit, shunting R136 (390K). The net effect for weak signals is improvement of both d-c restoration and sync.

Single-Stage Video Amplifier. – The video amplifier may use one or two stages, as long as it provides the amount of peak-to-peak video signal needed. When enough video signal output is available from the detector, one video amplifier stage can provide the video signal amplitude required at the kinescope. Such a circuit is shown in Fig. 33-30. The video stage uses the 6AG7 power pentode in a typical a-c video amplifier circuit. Four picture stages are used to supply i-f signal for the crystal diode detector. The output

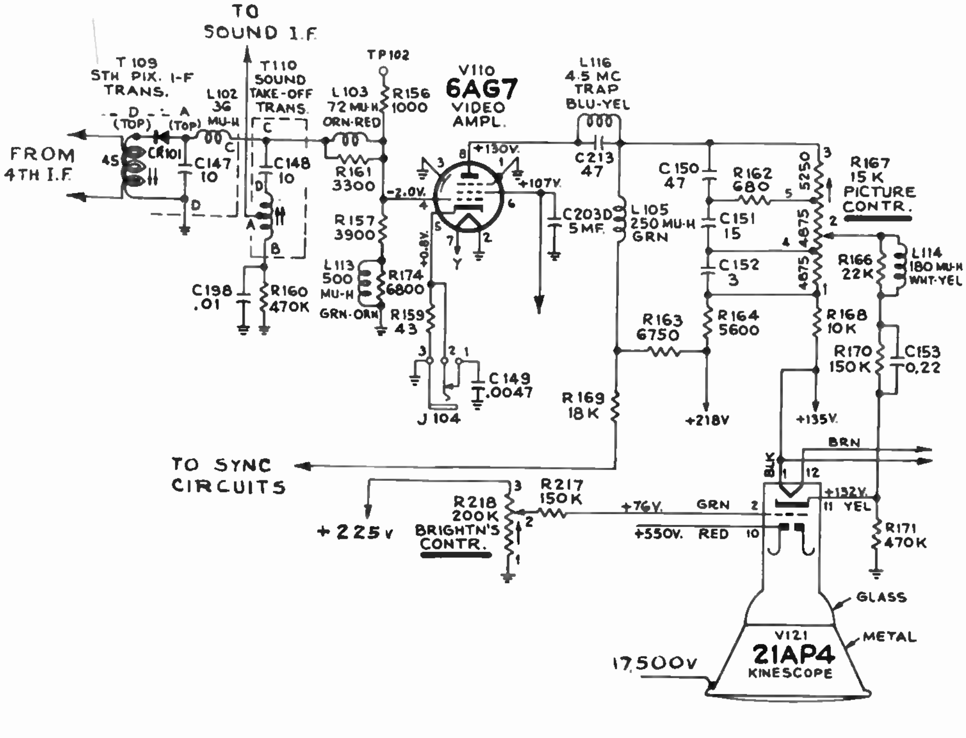

Fig. 33-30

is a negative going signal which, inverted by the action of the single stage of video amplification, gives a positive signal output, requiring cathode input to the kinescope, as explained previously. Since the video amplifier is direct-coupled to the picture second detector, there is no loss of the d-c component of the composite video signal, and a d-c restorer is not needed at this point.

The picture (contrast) control R167 in this receiver does not vary the gain of the video amplifier. The gain is always at maximum. Instead, the picture control is a potentiometer that is used to tap off part of the video amplifier output. The video signal voltage from the variable arm to ground is applied to the kinescope cathode. The condensers C150, C151 and C152 compensate for changes in frequency response of the kinescope input circuit for different contrast control settings.

PART II – TROUBLESHOOTING VIDEO AMPLIFIERS

VIDEO TROUBLES AND TESTS

33-12. Troubleshooting the video amplifiers follows the procedures previously described:

1. Localize to a section.
2. Localizing to a stage.
3. Finding the defective component.

We assume that the sound and raster are both normal but the picture is not. One of three things may be wrong with the picture:

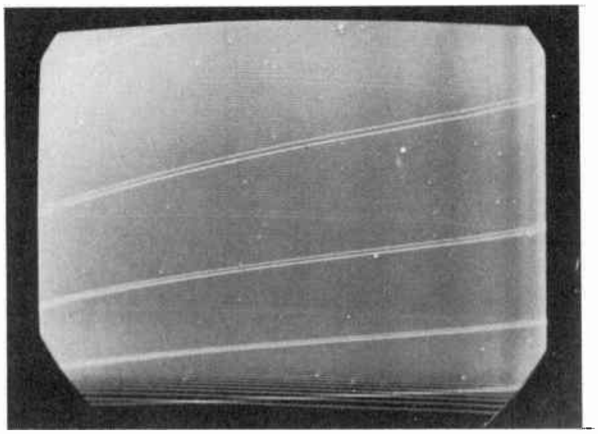

Fig. 33-31

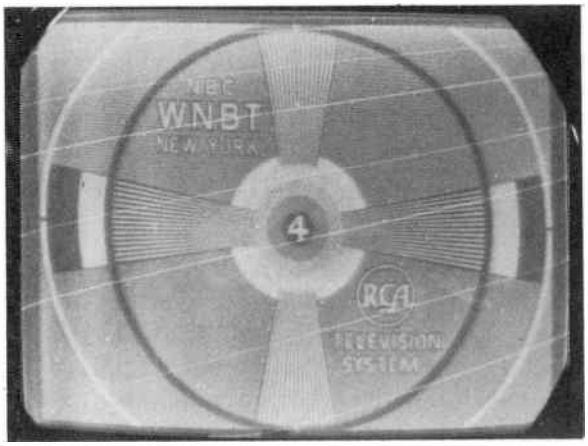

Fig. 33-32

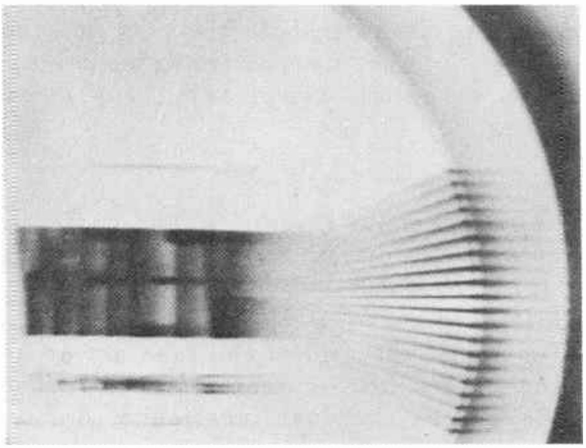

(from PICT-O-GUIDE)

Fig. 33-33

(a) No picture. (See Fig. 33-31)
(b) Weak picture-snow. (See Fig. 33-32)
(c) Smeary picture. (See Fig. 33-33)

Any of these three possibilities might indicate trouble either in the picture i-f section or in the video amplifier section. In order to determine that this trouble is caused by either the picture i-f section or the video amplifier section, check to see if the raster is very snowy. If you have no picture but a lot of snow, the trouble probably precedes the converter and is not in either one of the two sections just mentioned. To localize the trouble of no picture to either of these sections, we have several methods. One way is to measure the *d-c voltage* at the output of the picture second detector. Vary the fine tuning control or channel switch to make sure you are not just reading rectified noise voltages. If you get a d-c output from the picture second detector and it is due to signal, you know that the i-f and detector stages are operating and that the troubles lies in the video amplifier section.

Another localizing method is accomplished through the use of an *a-c meter.* This consists of measuring the effect of the signal at the grid of the first video amplifier. The lack of a signal indication at this point shows either the picture detector or picture i-f stages to be defective. If you do get a signal at the grid of the first video amplifier and no picture, the video amplifier section is defective.

Still another way of localizing the trouble is by means of 60-cycle signal injection. In some amplifiers, it is possible to tap off the filament voltage and feed it directly into the amplifier. A method sometimes used is to touch the grid with a finger, using stray 60-cycle pickup. Neither method is very effective, because of the low resistance found in the grid circuit of many video amplifiers. In the first case, this low resistance forms a portion of a voltage divider in series with the reactance of a condenser going to the filament supply. Because the grid resistance is low, insufficient 60 cycle voltage will appear at the grid to give an unmistakeable indication.

In the second case (finger) the method is also impractical because of the low input impedance and the possibility of shock hazard from minus 100 volts. What we need is a method of injecting a 60-cycle signal into the video amplifier with sufficient amplitude to give us a very definite indication. As originally described in Lesson 25, we can do this as follows: Connect a wire jumper, in series with a 0.1 microfarad (or larger) condenser from the plate of the audio output tube to the grid of the first video amplifier. Turn the volume control up full and place your finger on the center lug. (This uses the stray body pickup as before, but also uses the audio amplifier to give a good strong signal.) If the video section is OK, there will be a very pronounced indication on the kinescope.

Weak Picture. – If we get a weak picture but sound and raster are OK, we may determine whether the trouble is before or after the converter stage. The clue is to look for snow in the picture. If the picture is very snowy the trouble precedes the converter. If not, the trouble is either in the picture i-f section or video amplifier section.

One way of determining the section at fault is to measure the picture detector d-c output voltage. This presupposes a knowledge of the normal reading for the particular type set involved as well as the location and channel. If the output voltage is appreciably less than normal, the trouble lies with the picture i-f section. Otherwise, it is in the video amplifier section. It is difficult to say here what a "normal" d-c output voltage would be, but a typical reading is about 3 volts. The best way to determine the normal detector output voltage is to measure it in several good sets of the same type.

While the meter method just described is probably best, there is another method to localize the trouble to either the picture i-f or video amplifier sections. This consists of taking a wire jumper in series with a condenser (.05 microfarad or so) and connecting the output of the picture detector directly to the signal element (grid or cathode, as the case may be) of the kinescope tube. If the picture i-f section and detector are ok, you should get a picture (even if a rather weak one) on the kinescope. In doing so, it is necessary to disable the video amplifier, usually by pulling out the tube or tubes. In the case of direct coupled video amplifiers, this may create a special problem which will be treated in a later section.

As in the previous example of meter measuring, this method also requires knowledge of what to expect in the way of picture strength on the kinescope screen. This prior knowledge is obtained by making this test on several good sets and noting the "normal" picture strength on the kinescope screen. With this as a standard, you can then go ahead and check other sets to compare the output of the picture second detector against the standard. If, on the particular set you are checking, the picture is unusually weak, the trouble lies in the picture i-f section. On the other hand, if the detector output is normal, the trouble lies in the video amplifier section.

Negative Picture. One of the troubles sometimes encountered is a *negative* picture on the kinescope. That is, all the parts of the picture normally black appear white and vice versa. In order for a picture to appear negative, the polarity of the signal fed to the kinescope must be reversed. We can see how a negative picture may appear, from the following example Let's assume that we have a two stage video amplifier and that the signal is fed to the kinescope grid. The kinescope grid signal normally has negative sync polarity. Suppose one of the video amplifiers should become inoperative. The signal can still feed through this stage by capacity coupling. However, we would lose the 180 degrees reversal, of polarity produced by the stage. This means that the picture signal polarity would be reversed on the kinescope grid, and the picture would be *negative* and (because one stage is missing) weaker. The same effect may occur in a single stage video amplifier if the stage becomes inoperative. A negative picture produced in this way can be caused by the video amplifier; it *cannot* be caused by any stage preceding the detector. Until the signal is rectified by the picture second detector, it is an a-c wave and has no definite positive or negative polarity.

Smeary Picture. As in the case of a weak picture, this could be the result of a defective picture i-f section or video amplifier section. To localize this trouble to one section or the other, we may use the same method described immediately preceeding this section, in which we disable the video amplifier and connect the kinescope to the output of the second detector. If the smear does *not* appear when this is done, the fault lies with the video amplifier. On the other hand, if the smear still persists, the fault is probably in the picture i-f section.

Localizing To The Kinescope. No picture, or weak picture troubles sometimes result from a defective kinescope. The best method for checking this is to substitute a kinescope known to be good. This method is not always possible and other means must then be used. To determine if the kinescope itself is affecting the signal input to it, use an a-c meter to measure the signal at the kinescope grid (or cathode if so connected) with the kinescope plugged in. If you get no reading on the meter, unplug the kinescope. If there is still no reading, the trouble precedes the kinescope. However, if any appreciable change in reading occurs as the kinescope is plugged in or out, you must suspect the kinescope or its associated circuits of being defective.

LOCALIZING TO ONE STAGE

33-13. – Let's assume we have determined the video amplifier is at fault. Since this may consist of a two stage circuit, we first have to localize the trouble to an individual stage. In this case we are now assuming the trouble to be either no picture at all or a weak picture; the case of a smeary picture will be dis- separately. This may be done by signal injection and signal tracing. As an indicator we may use either the kinescope or an a-c meter, as illustrated in Fig. 33-34.

First, let's see how this works out with the kinescope. We need a 60-cycle signal of sufficient amplitude, obtained by the method previously described. Inject this signal first into the grid of the kinescope. If you get a "normal" indication, the kinescope and its grid circuit can be assumed to be OK. Next inject the signal into the grid of the second video amplifier (if there are two) and observe the indication on the kinescope. If this is "normal" as compared to an indication on a good set, the second stage is OK. If not, the trouble lies in this stage. If the second stage is OK, move the injected signal back to the grid of the first video amplifier and compare the indication (if any) with the "normal". If the second stage was OK and the indication now is not, the trouble is in the first stage. If the

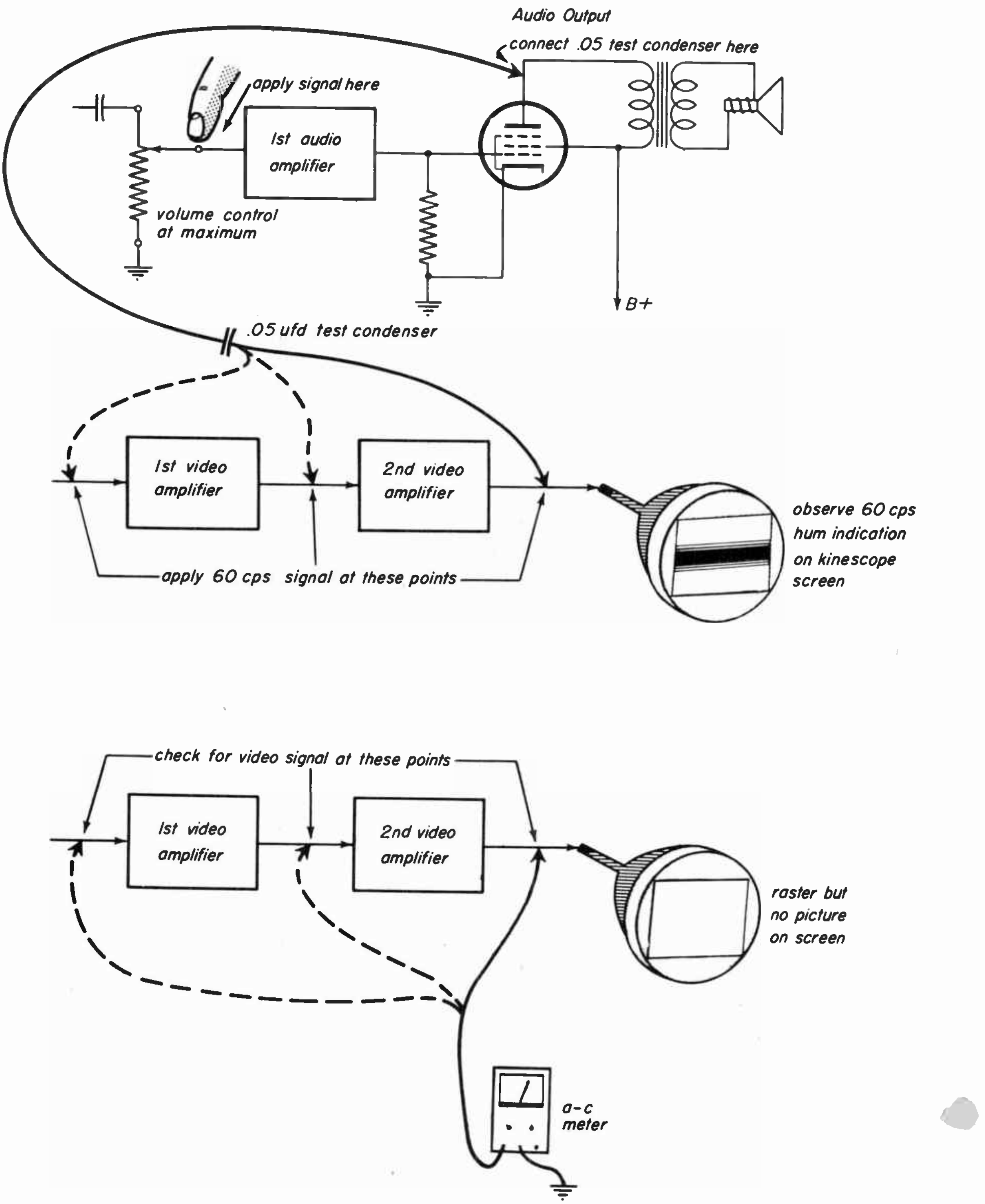

Fig. 33-34

first stage is OK, the trouble could still be between the output of the picture second detector and the input to the first video amplifier. Therefore, if this seems to be the case, move the point of signal injection back to the detector output and observe the kinescope indication. If this is not correct, the trouble lies between the detector output and the grid of the first video amplifier.

A similar procedure may be followed using an a-c meter as an indicator, rather than the kinescope. In this case connect the a-c meter across the signal input circuit to the kinescope (grid or cathode as the case may be). No signal injection is needed in this case. You measure the actual signal picked up by the set, If no reading is obtained at the input kinescope circuit, move the meter back one stage at a time until the signal appears. When you do get it, you know the trouble is in a circuit following the meter position. The meter method may be preferred by some servicemen because a more definite indication is given. However, either method will be found satisfactory with practice.

TROUBLESHOOTING A-C VIDEO AMPLIFIERS

33-14. – The basic principles of troubleshooting a-c amplifiers, including video, was discussed in considerable detail in Lesson 26. These principles are, therefore, applicable here. To illustrate by a practical example, we are going to examine a schematic of a typical video-amplifier, shown below.

The first video amplifier (6AU6) uses fixed bias on its grid. If a cathode-to-grid leakage condition should develop in the tube, this bias would be reduced or eliminated. As a result, the plate voltage of the first video amplifier would be *low* due to excessive plate current. Another clue would be to look at the picture. The loss of bias would cause a compression of the picture signal due to saturation plate current. Due to this the d-c restoration would not be correct and the retrace lines would probably show. The picture would also tend to be darker than usual. The solution here of course, is a new tube. The condition of low plate voltage could also be caused by an open peaking coil. For example in the plate circuit of the first video amplifier we have a peaking coil L189 which is paralleled by R139, a 22,000 ohm resistor. The coil has a d-c resistance of only 5 ohms, so that the parallel combination of coil and resistor have a resistance of about 5 ohms. However, if the coil should open up, the plate circuit resistance will increase to 22,000 ohms. This will cause a condition of low plate voltage and may show up as a smear in the picture. A somewhat different

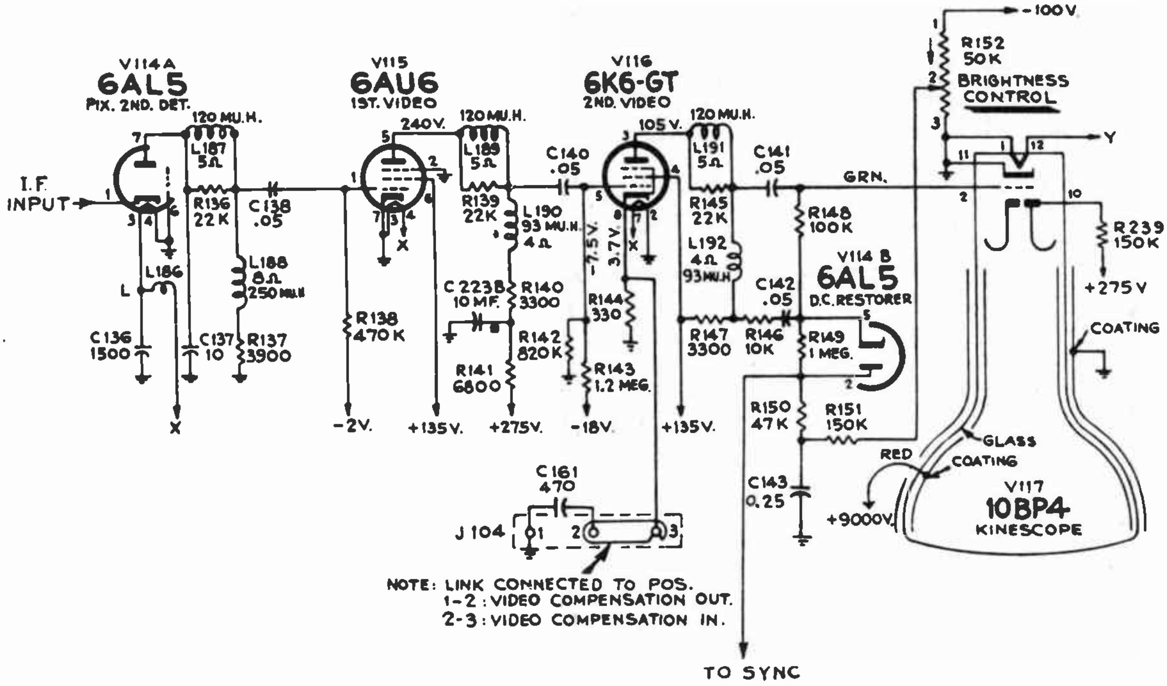

NOTE: LINK CONNECTED TO POS.
1-2 : VIDEO COMPENSATION OUT.
2-3 : VIDEO COMPENSATION IN.

Fig. 33-35

situation exists in the case of a coil such as L190 which has no parallel resistor across it. If this coil opens up, there will be no plate voltage and probably no picture, although a weak negative picture may appear as a result of grid-plate capacity in the tube. Some peaking coils are wound on a 10 megohm resistor. The resistor is used simply as a coil form and has no electrical function. In this case you should measure 10 megohms across an open coil – if such a resistance can be measured at all on your ohmmeter. The plate voltage would be very low or almost zero. A similar situation in respect to peaking coils also exists in the second video amplifier. Other troubles which affect the d-c potentials of an a-c amplifier have been thoroughly covered in Lesson 3. If you don't remember these clearly, you might go back and review them.

Smear. – If we have a smeared picture and have localized the trouble to the video amplifier, it is important to realize that it may be caused by any one of several things. In general, smear caused by the video amplifier is due to any factor which changes the low or high frequency response of the amplifier. Thus any components which are specifically inserted to compensate for frequency response may cause smear if defective. In addition, other components may also cause smear. Let's investigate this with the aid of Fig. 33-35. Let's begin at the grid of the first video amplifier. An open coupling condenser (C138, C140, C141) would give us extremely poor low frequency response and cause smear. In connection with low frequency response we have the compensating network C223B and R141 in the plate circuit of the first video amplifier. An open condenser or increased resistor in this part of the circuit could cause smear due to incorrect low frequency response.

Improper high frequency response can also cause smear. The high frequency response is affected by the peaking coils and also by the value of the plate load resistor (R140 or R147). A simple way to check open peaking coils is to short a piece of wire across them and see if the trouble is alleviated. Any defects in these components may cause the picture to smear. It is conceivable that smear might be caused by a defective tube having severe grid-to-cathode leakage. In this case, the relatively low grid-to-cathode leakage resistance shunts the normal grid resistor, reducing its value. This has the effect of reducing low frequency response and may cause smear.

No Control of Brightness. – While not a trouble actually due to a defective video amplifier, the lack of brightness control may occur as the result of a defective condenser in an a-c video amplifier, and so concerns us here. In the case of the circuit of the 8TS30 (or 630TS) receiver, there are three condensers which may cause this trouble. The schematic diagram appears in Fig. 33-35 and a simplified diagram of the circuit now under discussion is in Fig. 33-36.

This circuit shows the components between the plate of the second video amplifier and the grid of the kinescope. The three condensers which may prevent control of the brightness are C141, C142 and C143. A short, or leakage in any one of these three condensers may bring about this trouble. It is possible to localize the defective condenser out of three by voltage measurements. Let's take C141 first. If this is shorted or leaky, a low *positive* or a low negative voltage may appear on the kinescope grid instead of the normal *negative* voltage. However, a shorted C142 could have the same effect. We may decide between the two condensers by a simple d-c voltage measurement. Measure for a d-c voltage drop across R148 (grid side positive). If you get one, C141 is defective. If not, the positive voltage is due to a shorted C142. The reasons behind this is as follows: If C141 is shorted, current will flow through R148 producing a voltage drop across it. The complete current path is as follows: From Plus 135 volts, through R147, L192, C141, R148, R149, R150, R151, R152 to minus 100 volts. If you suspect C141 (or the others) of being leaky or shorted, check the condenser by a voltage measurement.

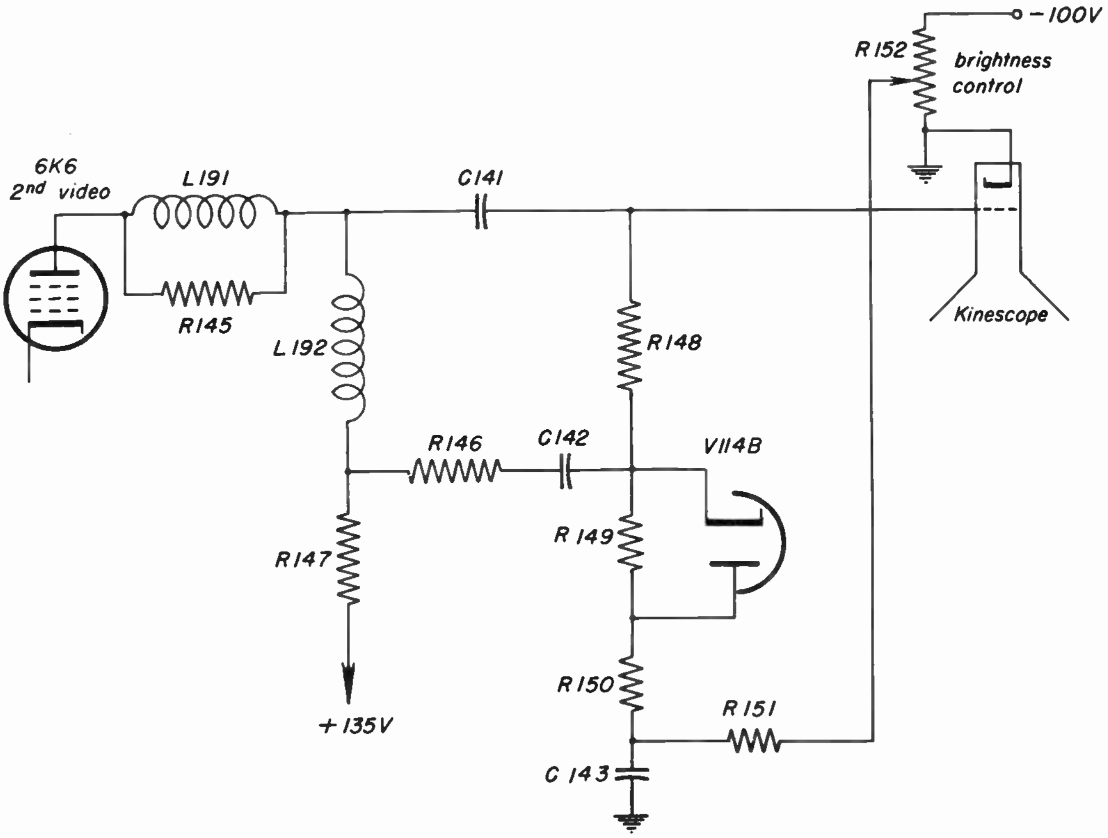

Fig. 33-36

Disconnect the end of the condenser opposite the end going to the supply voltage. Measure for a d-c voltage from the now disconnected end to ground with a high resistance voltmeter. If you measure any voltage, the condenser is defective. If C142 was shorted, the complete current path would be: From plus 135 volts, through R147, R146, C142, V114B, R150, R151, R152 to minus 100 volts. If a d-c voltage drop appears across R146, you will know that C142 is shorted.

A third possibility exists, and that is a short in C143. If this condenser should short, the brightness control voltage applied to the grid circuit would be zero regardless of the setting of the control. This can be checked by measuring the negative voltage across the condenser. It should be about the same as the voltage at terminal 2 of the brightness control. If the voltage across C143 is appreciably less (due to current in R151), the condenser is defective.

In addition to defective condensers, a short to ground due to wiring, sockets or similar causes could also cause this brightness trouble. In this case the voltage would be zero at the grounded point but would appear at the other end of the resistor which was grounded.

This same symptom may be caused by a defective kinescope. To check, unplug the kinescope and see if this changes the bias. If it doesn't, the kinescope is not causing the trouble.

TROUBLESHOOTING D-C VIDEO AMPLIFIERS

33-15. Amplifiers. – This poses some additional problems not present in a-c amplifiers. From the discussion of d-c amplifiers presented earlier in this lesson, we saw that the voltages in both stages are interdependent. For instance, changing the grid voltage in the first video amplifier, could change every other voltage that is in both stages including the

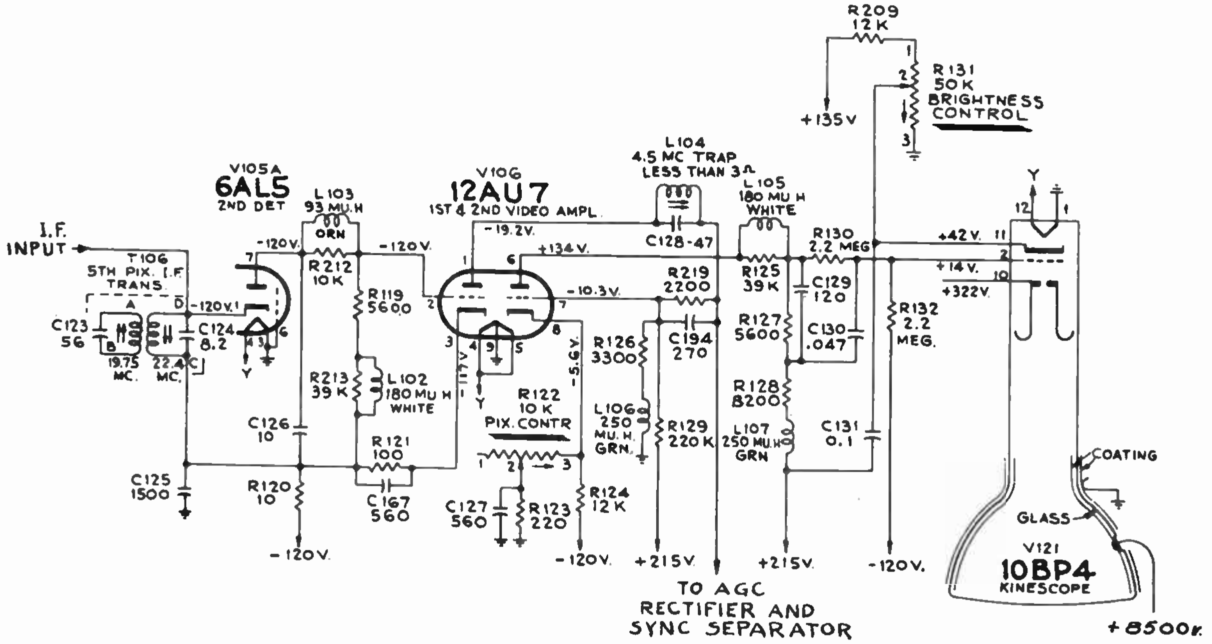

Fig. 33-37

kinescope grid voltage and in some receivers, even the AGC voltage. Thus, when you measure an incorrect voltage in one part of a d-c amplifier, remember that it may be the result of a defect in an entirely different portion of the amplifier, or even in a circuit, other than the amplifier proper. This will be shown by several examples with the aid of Fig. 33-37.

However, before getting to this, we have the problem of localizing picture troubles to either the video amplifier or picture i-f sections. One way of doing this is to disable the video amplifier and feed a signal from the picture second detector into the kinescope signal element (grid or cathode as the case may be). Fig. 33-40 shows how the video amplifier of a receiver is jumped with a condenser for test purposes. The disabling may be accomplished by pulling out the video amplifier tube. However, in receivers such as that of Fig. 33-37, an important precaution must be observed. In such receivers, when you pull out the video amplifier tube the AGC bias may increase to such an extent as to cut off the i-f amplifier. If this happens, both picture and sound will be lost. To remedy this, it is necessary only to readjust the AGC threshold control until normal sound returns, at which point the picture will also come through to the detector. The AGC control adjustment may be extremely critical under these conditions. To render it less critical, simply ground the end of the threshold control labeled (1) in Fig. 33-37. These steps are required only in those receivers in which the AGC voltage is tapped off one of the video amplifiers. Once we have unplugged the d-c amplifier tube and reset the threshold control (if required), the localizing procedure for *no picture* is the same as described for a-c amplifiers. That is, a signal is fed from the picture second detector into the signal element of the kinescope. If you get a picture the trouble is in the video amplifier. If not, it precedes the video amplifier. Assuming that we do get a picture and the trouble is in the video amplifier, further localization is possible by feeding in a 60-cycle signal as previously described and checking for an indication on the kinescope or on an a-c meter. The localizing procedure for weak pictures and smeary pictures remains the same as previously described for a-c amplifiers and need not be repeated here.

Component Localization – Troubleshooting a d-c video amplifier by d-c voltage measurements is more difficult than in the case of an a-c video amplifier. The reason for this is that the various voltages in a d-c amplifier affect each other to a large degree. For example (refer to Fig. 33-37), the plate voltage (pin 6) of the second video amplifier depends on the grid (pin 7) voltage of the second video amplifier. In fact, the plate voltage (pin 6) of the second video amplifier, depends on voltages as far back as the grid voltage of the first video amplifier. Because of this, a definite and logical procedure is required to localize the source of trouble. Such a procedure is outlined in the following paragraphs. The discussion is based on the diagram of Fig. 33-37 and stems from the fact that any incorrect voltage appearing anywhere in the video amplifier will change the kinescope grid voltage. This being the case, the kinescope grid voltage becomes our starting point.

Let's say that we measure the kinescope grid voltage and find it to be incorrect. This may be the result of one or two general conditions. It could be due to a fault in the voltage divider consisting of R130 and R132 going to minus 120 volts, or to a defect in the video amplifier. To localize the trouble, measure the plate voltage (pin 6) of the second video amplifier. If this is normal, the trouble is in the voltage divider. If not, the video amplifier is at fault. If the video amplifier is defective change the tube (12AU7) first to see if this clears up the trouble. In this set the AGC rectifier and sync separator tubes are connected to the video amplifier and may affect its voltages. To determine whether this is the case, simply remove this dual triode (V108) and see if the voltages change at the video amplifier. If they do, V108 is defective. If not, the trouble is localized to the video amplifier proper. Assuming the plate voltage (pin 6) to be incorrect and that V108 is OK, the trouble could be caused by some defect in the plate circuit (pin 6) of the second video amplifier or it could be due to incorrect grid bias. To find out which it is, simply measure the grid bias (pin 7) of the second video amplifier. If the grid bias is OK, the trouble is in the plate circuit (pin 6). If the grid bias is wrong, the plate circuit is probably OK. Let's first assume the grid bias (pin 7) to be OK and the plate voltage (pin 6) to be incorrect. The trouble then lies in some part of the plate circuit, in which there are several possibilities. For example, if L105 should open up we would still have R125 in the circuit, increasing the plate load resistance by some 39,000 ohms. The symptom would be low plate voltage and the cause, the open L105. Jumping this coil with a piece of wire should restore normal plate voltage. Greatly increased values of R127 or R126 would have a similar effect on the plate voltage (pin 6). If the other peaking coil (L107) in the plate circuit opened, we would measure a *negative* plate voltage (pin 6). This happens because when L107 opens, it interrupts the B plus, but the minus 120 volts will be fed through R130 and L105 to the plate.

Let's go back a little now and assume that when the plate voltage (pin 6) is off, we find the grid bias (pin 7) to also be wrong. We would therefore conclude that the incorrect bias is causing the wrong plate voltage to appear. If the grid bias is incorrect, the cause could be a defective component in the grid (pin 7) circuit of the second video amplifier, plate circuit of the first video amplifier, or improper conduction of the first video amplifier tube. Since all the voltages are so interdependent, it is probably best to check the grid to cathode bias of the first video amplifier before proceeding further. Let's assume the bias of the first video amplifier to be OK. We now have to check the components in the plate of the first video amplifier and the grid of the second video amplifier. One possibility is an open 4.5 mc trap coil, L104. If this opened up, there would be no plate current from the first video amplifier tube and the grid voltage (pin 7) would become more positive. If L106 should open up, the grid would tend to go positive since the coil completes a voltage divider network to ground. This divider network normally consists of R129, R126 and L106 going from plus 215 volts to ground and helps to determine the proper grid bias (pin 7). A greatly increased value of R129 would tend to make the grid more negative by changing the voltage divider relationship.

Let's backtrack once again and assume, that when we measured the grid-to-cathode bias of the first video amplifier, it was incorrect. Note that the bias of the first video amplifier is cathode bias, developed across R121 going to pin 3. Therefore, incorrect bias may be caused by one of two possibilities. The first is a changed value of R121, or a shorted or leaky cathode bypass condenser C167. The second possibility is that the current going through R121 is of the wrong magnitude. Assuming the tube (V106) to be good, and the grid voltage to be correct, incorrect plate current in the first video amplifier tube could be the result of a defective component in the plate current path from pin 1. The effect of these components in the plate circuit of the first video amplifier tube and the grid circuit of the second video amplifier tube have already been discussed.

In summing up the troubleshooting procedure for d-c video amplifiers, we find that a bit more is involved than in troubleshooting a-c amplifiers. However, like everything else, if we establish a definite procedure, the task is not quite so difficult. We have found that any voltage change in a d-c amplifier circuit shows up by affecting the voltage at the kinescope grid. Therefore we establish the kinescope grid as our starting point. From here we proceed back to the plate of the second video amplifier. If the trouble is not yet found we then go to the grid of the second video amplifier and from here, if necessary, back to the first video amplifier elements. It should also be noted that in some sets the AGC system ties into the video amplifier and may affect its voltages. Pulling out the AGC tube usually eliminates its effect on the video amplifier circuit.

TROUBLES NOT AFFECTING THE D-C VOLTAGES

33-16. – The procedure used to locate these troubles generally is based upon some form of signal measurement. In discussing these particular troubles we will first see how they affect a typical a-c video amplifier and then a d-c video amplifier. As a typical a-c video amplifier, we will analyze the resistance-capacitance coupled circuit first discussed in Section 33-9 and reproduced here in Fig. 33-38.

Let's first examine the circuit in the output of the picture second detector. There are no d-c voltages applied to any of the components here (neglecting C138), so that any defect in this section would not show up as a variation of d-c voltage. Defective components in this section could affect the picture quality and strength. For example, if L187 should open, the picture strength would decrease and a smear may result as well. The decrease in picture strength would occur because, with L187 open, a voltage divider would be set up, consisting of R136 and R137, with a large portion of the signal *lost* across R136.

C137 should be 10 micromicrofarads, but is sometimes found to be 100 micromicrofarads. If this should be the case the picture quality is impaired due to a reduction in high frequency response.

An open in L188 may still allow a picture to appear but it would be smeared because of poor high frequency response.

None of the above troubles can be found by the measurement of d-c voltages. The trouble may be localized to this section by signal measurement or signal injection. After localization, the individual faulty component may be detected.

Another trouble not affecting d-c voltage readings would be an *open* coupling condenser. In the diagram of Fig. 8-38, there are three such condensers. These are C138, C140 and C141. The general effect on the picture if any of these opened would be pretty much the same – weak picture with severe low frequency smear. The high frequency picture components may still be passed by means of stray capacitances, resulting in some suggestion of a picture. However,

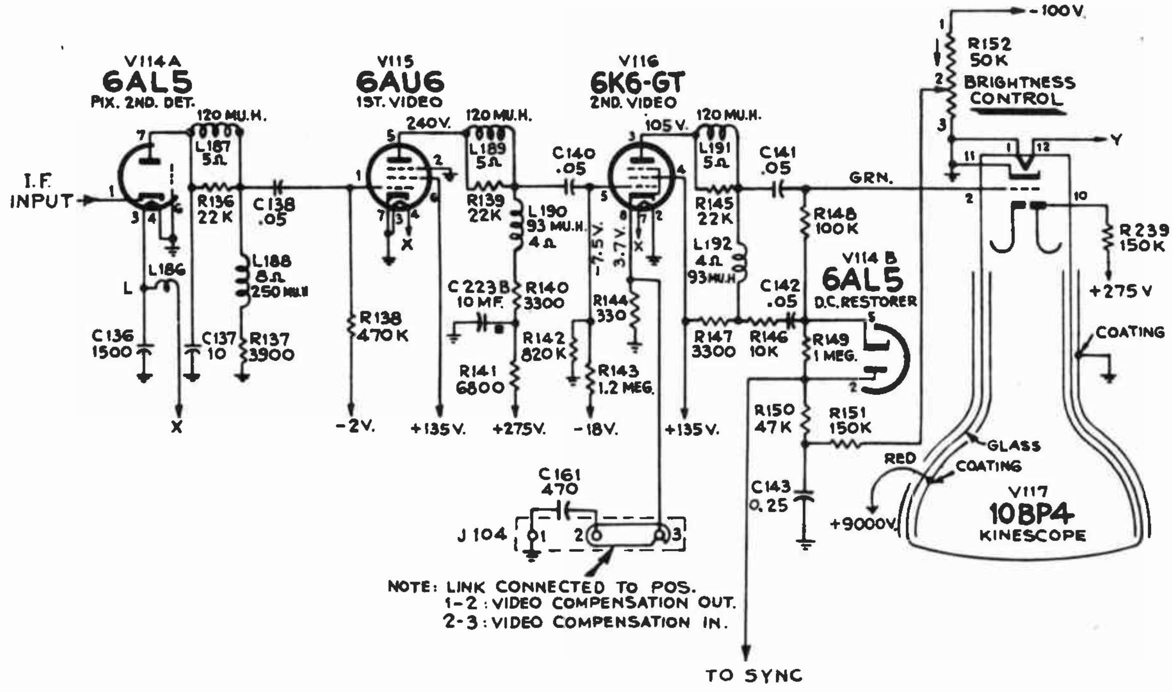

NOTE: LINK CONNECTED TO POS.
1-2 : VIDEO COMPENSATION OUT.
2-3 : VIDEO COMPENSATION IN.

Fig. 33-38

it is possible to get no picture at all with an open coupling condenser. As we said before, the best way to find an open condenser is to shunt a good one across it.

In the plate circuit of the first video amplifier we find a condenser labelled C223B. This condenser is part of a low frequency compensating network with R141. If this condenser should open, the circuit voltages would not be changed, but the picture would smear. Again, we can check this most conveniently by shunting a good condenser across it.

An open C143, going to the brightness control, may cause smear or the introduction of undesired signals. Sometimes, lines which look like horizontal deflection troubles are due to this condenser.

Grid Blocking. – An open or excessive value of grid resistor can sometimes result in an intermittent picture. This would be most likely to occur at the grid of the first video amplifier (R138 in Fig. 33-38). Of course an *open* resistor would affect the d-c voltage at the grid, but resistors rarely open, especially in the grid circuit. It would be more likely to have a bad solder connection or an increased resistor value. What happens here is that large signal amplitudes may cause grid current to flow, charging C138 negative at the grid side. This produces a bias voltage and if great enough it may cut off the first video amplifier intermittently, as the charge builds up and leaks off. You may be able to check this condition by putting a d-c voltmeter on the grid. If the picture returns when you connect the voltmeter at the grid, you can suspect a defective grid resistor. In this case, the impedance of the meter takes the place of the defective resistor and permits the circuit to operate. We might point out that grid blocking cannot occur unless there is a condenser in the grid circuit.

D-C Amplifiers. – Certain troubles may occur in d-c video amplifiers which do not affect the d-c potentials, although these are fewer in number than in a-c amplifiers. We will discuss such troubles with the aid of the video amplifier schematic shown in Fig. 33-37, which is a typical direct-coupled video amplifier.

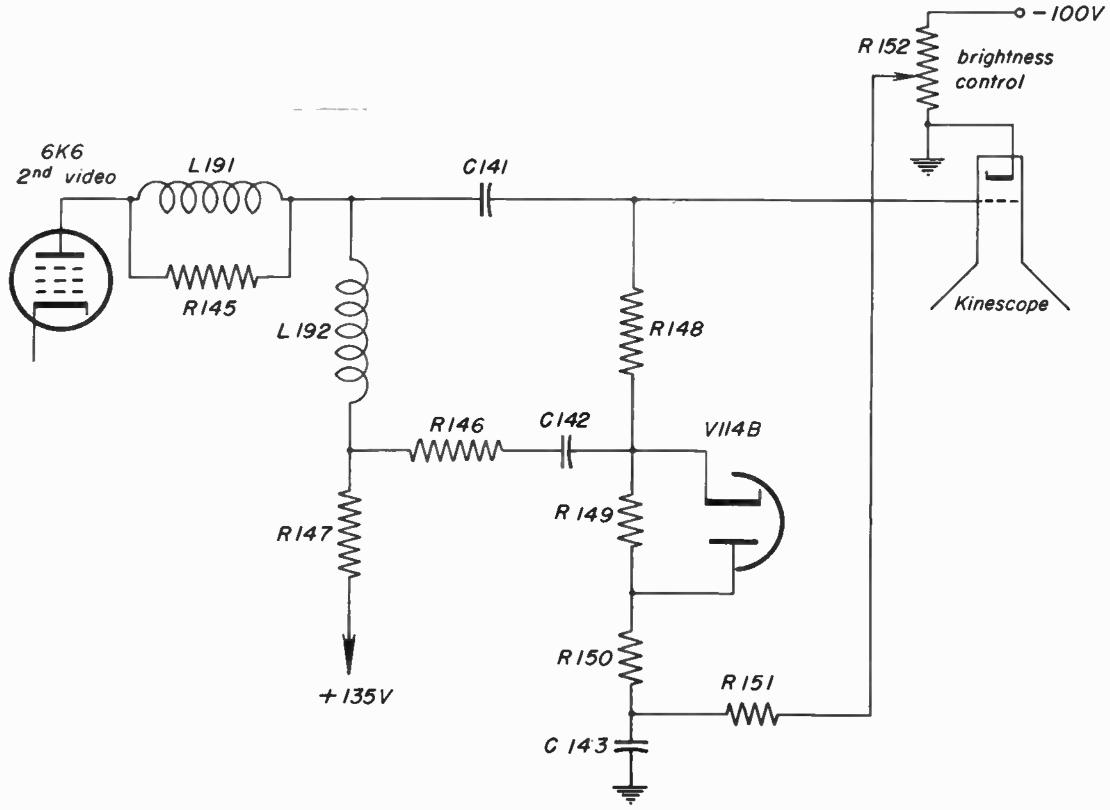

Fig. 33-39

In this circuit an open L103 would reduce picture strength and may cause smear. An open L102 will probably cause picture smear. The same is true if C167, C194 or C129 should open. The video signal is coupled to the kinescope grid, by C120. If this should open it will have the same effect as an open coupling condenser in an a-c video amplifier. That is, a weak picture badly smeared.

Kinescope Frequency Response.—Just as a video amplifier must have the correct frequency response, so must the kinescope signal circuits, and in particular, the grid-to-cathode input circuit. To assure this, sometimes the kinescope cathode is grounded directly, as in Fig. 33-38. With a grounded cathode the signal is fed into the grid, as well as the brightness control voltage. To assure proper frequency response, it is necessary to have an a-c ground for the signal circuit, without shorting out the d-c brightness control voltage. This is accomplished by providing a bypass condenser such as C143 in Fig. 33-38. Should this condenser open there would no longer be an a-c ground at the bottom of R150. This would then cause other components to be included in the signal circuit which could change the frequency response. In this case the additional components added would be R151, the brightness control, and a filter condenser to ground in the power supply. As a result, an open C143 may cause a picture smear. Most TV sets have a condenser such as C143 to complete the a-c signal path in the kinescope grid-to-cathode circuits. As another example, in Fig. 33-37, the condenser is C131. In this case the cathode is not grounded and C131 provides the a-c ground. Some kinescopes (not metal) have an outer conductive coating forming one plate of a high voltage filter condenser. The other plate is inside of the tube. If the outer plate becomes ungrounded (generally due to loose springs) the high voltage supply has no low impedance path to ground. This results in a picture smear due to impaired frequency response in the kinescope circuit.

NO D-C RESTORATION

33-17. – This can occur only in sets using a-c video amplifiers. Receivers with d-c amplifiers do not require d-c restoration. A typical d-c restorer circuit is included in the diagram of Fig. 33-39. The principles and purposes of d-c restoration have already been discussed earlier in the lesson. What we are interested in at this time is how to tell when the d-c restorer is inoperative. The effect of an inoperative d-c restorer shows up in a definite manner on the kinescope screen. In general, the picture will be too dark and cannot be properly brightened by turning up the brightness control. Vertical retrace lines may appear with certain scene brightness, and vanish with others. A more positive check is to measure the kinescope d-c grid voltage while turning the channel switch on and off a station setting; when on a station the grid voltage should show a definite change in the positive direction. The required voltage increase can be determined by comparing to a good set.

A lack of d-c restoration, but with a good picture on the screen, could be due to a tube or a component failure. Tube substitution would be the first thing to try. In Fig. 33-39 improper d-c restoration may be caused by any of the following:

(a) V114B – defective filament on this half only.
(b) C141 or C142 – high resistance leakage (in the megohms).
(c) V115, grid-to-cathode leakage. This removes bias and causes signal compression. (See Fig. 33-38.)

It is possible that improper d-c restoration may be the result of other causes than those given above. However, we have included only those possibilities which will be of the most practical value in troubleshooting.

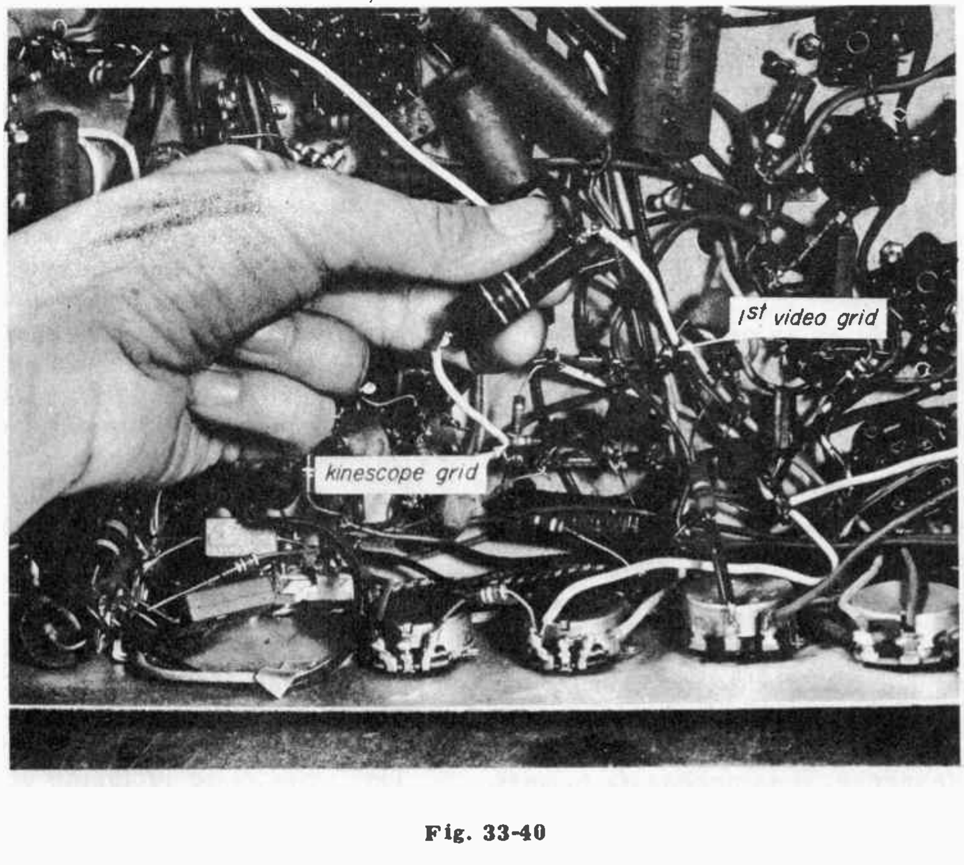

Fig. 33-40

NOTES

NOTES

TELEVISION SERVICING COURSE

PREPARED BY

RCA INSTITUTES, INC.

A SERVICE OF RADIO CORPORATION OF AMERICA

HOME STUDY DEPARTMENT
350 West 4th St., New York 14, N. Y.

LESSON THIRTY FOUR

PART I – AGC CIRCUITS

PART II – TROUBLESHOOTING AGC CIRCUITS

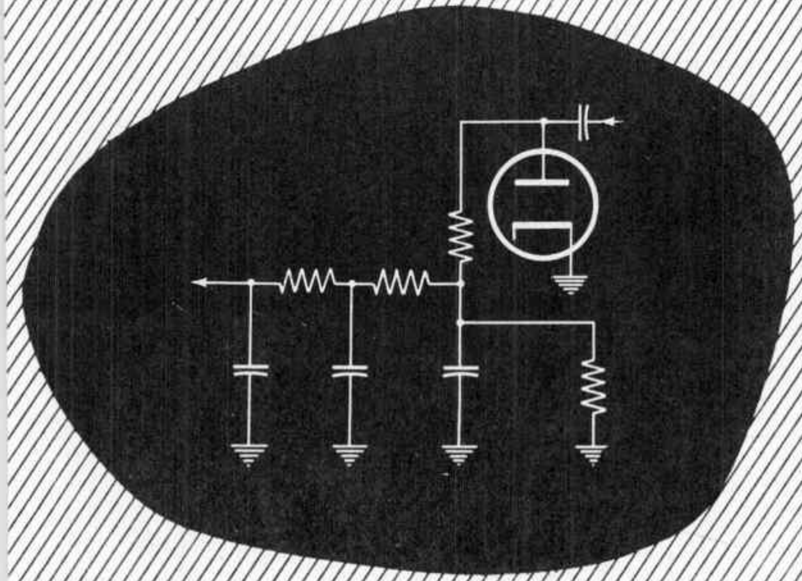

Lesson 34

PART I – AGC CIRCUITS

NEED FOR AGC

34-1. In the television receiver the automatic gain control (or AGC) circuit serves to keep the picture intensity or contrast level at a fixed value even though the picture signal at the input may vary. The viewer makes an initial setting of picture intensity or contrast, by adjusting a manual control to obtain the desired degree of contrast, and the AGC circuit holds the contrast level relatively constant. Some receivers, especially those manufactured early in the development of television, are not equipped with AGC, but have only a manual control for setting contrast. A manual picture control varies the amplification of the receiver over a wide range, since it is necessary that the viewer adjust such a receiver to amplify a weak signal greatly or a strong signal slightly.

The manual type of control can *always* set the amplification at any value from the minimum to the maximum. However, the amplification, which is determined by the setting of the manual control, is in no way dependent upon the strength of the signal being received. For example, when the control is set for high amplification while a weak signal is being received, and a strong signal is then tuned in, the receiver becomes overloaded, with resulting distortion. Since a different picture control setting is usually required for each incoming signal, tuning in different stations is somewhat a nuisance. AGC makes the adjustment automatically, increasing the convenience of station selection, and preventing overloading in the receiver due to too much signal. Furthermore, receivers not equipped with AGC are subject to changes in intensity, such as those produced by atmospheric conditions or by airplane flutter (uneven signal reflections from a passing plane). The eye is very sensitive to sudden changes in picture intensity; automatic gain control minimizes such changes and makes manual adjustment less frequently needed.

BLOCK DIAGRAM OF THE AGC CIRCUIT

34-2. Where AGC Fits Into the Receiver Circuit. – A block diagram of a TV receiver, showing where AGC fits into the circuit, is shown in Fig. 34-1.

The input signal to the AGC circuit may be taken from the output of the last picture i-f amplifier or from the video amplifier, as illustrated in Fig. 34-1. What is desired is to develop a negative voltage which is proportional to the strength of the incoming picture signal. This voltage can then be applied as bias to the grids of the picture i-f and r-f stages.

A strong input signal reaching the AGC circuit will result in a higher nega-

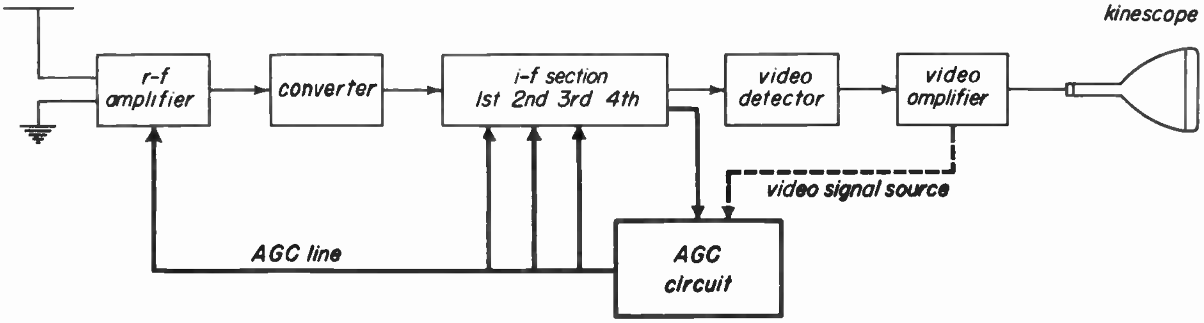

Fig. 34-1

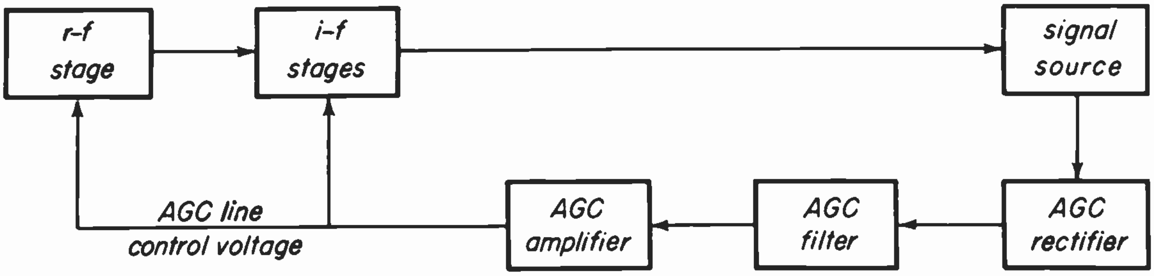

Fig. 34-2

tive control voltage. This voltage when applied to the r-f and picture i-f stages, will increase the negative grid bias and thus decrease the amplification of those stages. The net result is that the overall amplification of the receiver is reduced for strong signals; for weaker signals lower control voltages are developed and the gain returns toward maximum amplification. Thus AGC operates to maintain a substantially constant output as the picture signal voltage varies.

Simple Block Diagram of an AGC Circuit. – The essential parts of an AGC circuit are shown in the block diagram of Fig. 34-2. The basic elements are the signal source, the AGC rectifier, the AGC filter and the AGC line that couples the filtered AGC bias voltage back to the r-f and i-f stages to be controlled. Where the AGC control voltage developed at the AGC rectifier is not of sufficient amplitude to provide adequate control, an AGC amplifier may be added. When it is desired to provide the full amplification of the receiver, with no AGC operation for weak signals, a delay voltage may be provided so that the AGC circuit does not go into operation until a minimum signal level is reached.

COMPONENT PARTS OF AGC CIRCUITS

34-3. The Signal Source. – While automatic gain control is similar in many respects to automatic volume control used in broadcast receivers, there are some important differences. In a broadcast receiver the automatic volume control (AVC) voltage is usually obtained from the average amplitude of the rectified i-f signal (that is, the d-c component) which appears across the load resistor of the second detector. Regardless of the degree of audio modulation, the average value of either a low amplitude or high amplitude audio signal would be the same for a given amplitude carrier signal. This is indicated in Fig. 34-3.

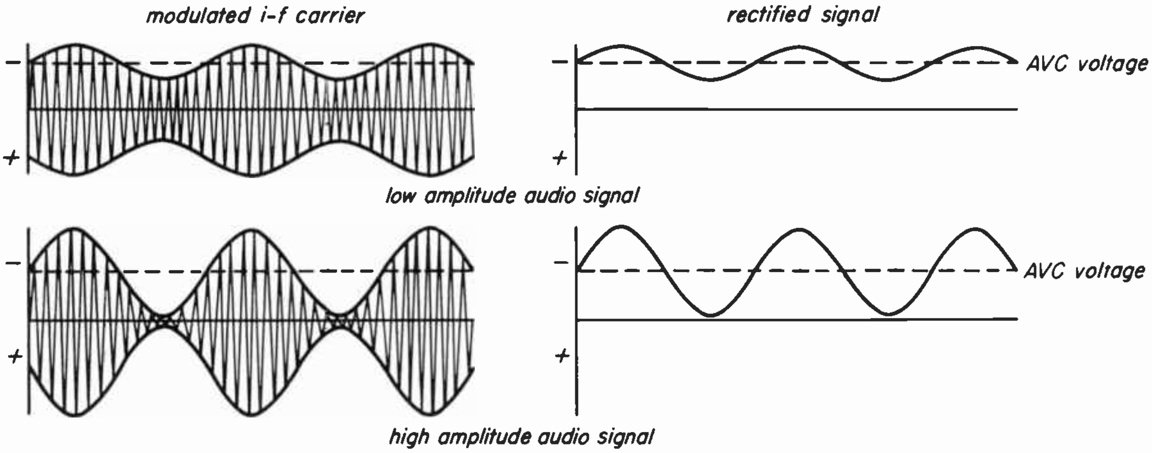

Fig. 34-3

This condition is not true of a rectified picture signal. Here the extent of modulation of the carrier wave is not only determined by the amplitude of the video signal, but also by the brightness of the scene transmitted. The result is shown here:

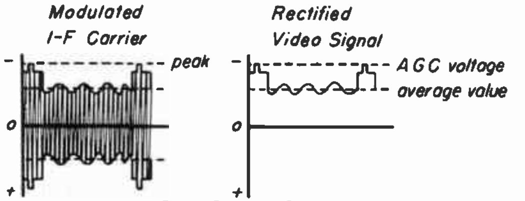

Dark Picture Signal

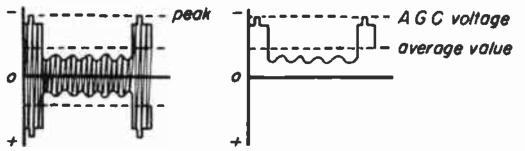

Light Picture Signal

Fig. 34-4

For the same amplitude of the i-f carrier signal, the average value or d-c component of the rectified signal is higher for a dark part of the picture than for a light part. However, the peak value of both signals, which represent the tips of the sync pulses, is the same. The AGC voltage, therefore, must be proportional to this peak value rather than the average value of the rectified signal.

Since the AGC voltage must be proportional to the maximum amplitude of the i-f carrier signal, (tips of the sync pulses), a good place to take the signal for input to the AGC circuits is the output of the last i-f amplifier. As an alternative we could take the signal from the same source as that used for the synchronizing circuits. In a receiver using an a-c coupled video amplifier, that would normally be from the d-c restorer. In a direct-coupled video amplifier, the signal source for both the sync and AGC circuits may be the output of the first video amplifier.

The AGC Rectifier. – The AGC voltage is developed across a load resistor in an AGC rectifier circuit. The action of the circuit is similar to a conventional diode rectifier or clamper. To obtain a negative control voltage the load resistor is connected to the plate of the diode. For a positive control voltage required in AGC circuits utilizing an AGC amplifier, the load resistor is connected in the cathode side of the rectifier diode.

The simplest arrangement is that shown in Fig. 34-5(a). Here, one half of a 6AL5 duo-diode is used in a clamper circuit, with the output of the last i-f amplifier as the signal source. The signal is applied through the coupling capacitor C_c to the plate of the diode. The cathode is grounded. R_2 is in series with R_1 as plate load resistors. C_1 bypasses R_1 to provide a d-c bias voltage. R_2 prevents C_1 from shorting the i-f signal to ground.

The operation of this circuit is as follows: On the positive cycle of the input signal the plate of the diode be-

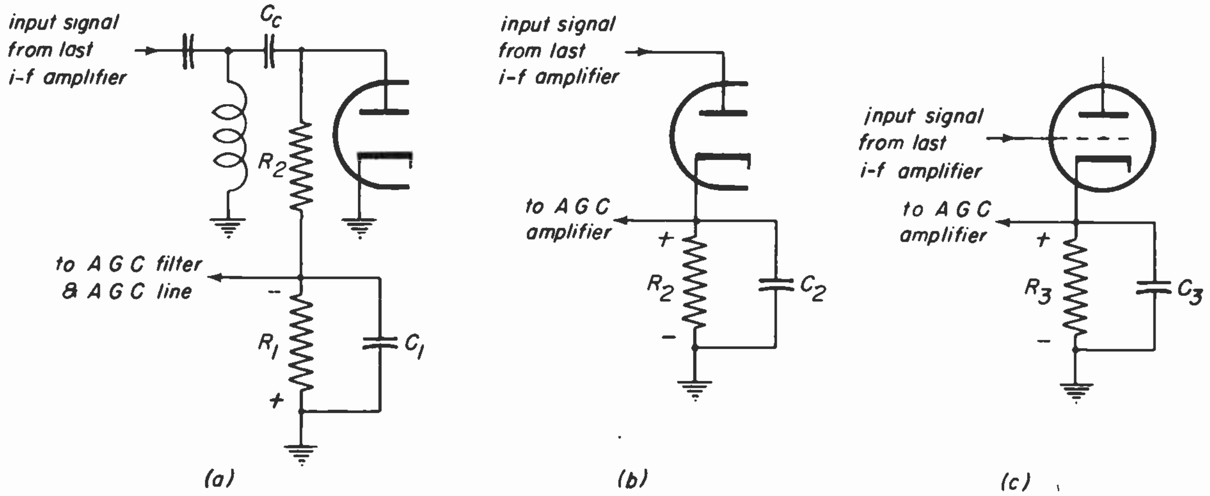

Fig. 34-5

comes positive in respect to the cathode and the diode conducts. This charges the coupling capacitor, C_c. During the negative half cycle of input voltage the diode does not conduct, and the coupling capacitor, C_c, starts to discharge through R_2 and R_1 and charges the shunt capacitor, C_1. The time constant is short so C_c charges quickly to the peak value of the signal, but the capacitor can discharge only slightly during the time that the diode is not conducting. After a few cycles the coupling capacitor remains charged at a value very close to the peak value of the input signal and the diode conducts only during the tip of the positive peak to replenish any charge that leaked off across the plate load resistors. The voltage developed across R_1 and the shunt capacitor C_1 is a negative voltage in respect to ground, whose value is proportional to the peak value of the input signal. This is available as a bias control voltage.

If instead of connecting the load resistor in the plate side of the diode, it were connected in the cathode leg of the circuit (Fig. 34-5b), the circuit would develop a positive voltage in respect to ground. This arrangement would be desirable where an AGC amplifier is used for the control voltage. The amplifier reverses the polarity of the voltage so that the output is negative and can be used as a control bias.

A somewhat similar arrangement is shown in Fig. 34-5c. In this case the tube used is a triode, with the grid and cathode serving as the AGC rectifier. The circuit could operate in one of two ways. First, with no (or little) bias, the grid may become positive in respect to the cathode, and some grid current results. In that case the grid serves as the plate of a diode and the circuit acts in the same manner as explained above. Or second, the circuit could be biased so that the grid never becomes positive in respect to the cathode. In this case, there is no grid current, but the tube will draw greater plate current when the positive input signal is applied. It passes through the load in the cathode circuit and develops a control voltage as previously explained. This arrangement, therefore, may be used in circuits that require an AGC amplifier.

The AGC Filter. – The rectified voltage which is used for AGC has, of course, a strong ripple component due to modulation on the i-f carrier. The particular circuit of Fig. 34-6 shows a shunt-type rectifier (rectifier in parallel with the load circuit, as related to the input) with a three-stage filter, R_1 R_4 C_1, R_2 C_2, and R_3 C_3. This filter removes all signal variations, leaving only a d-c voltage which varies with the video signal level. The smoothed-out AGC voltage output from the filter can then be applied to the bias distribution line of the receiver for application to the grid circuits of the stages to be controlled.

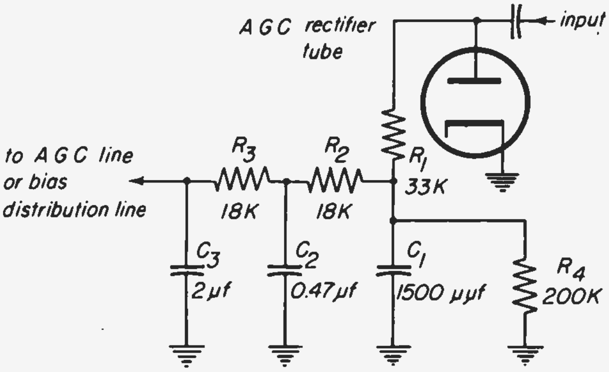

Fig. 34-6

The Bias Distribution Line. – The bias for the operation of an amplifier tube can be obtained in a number of different ways. Three methods are shown in Fig. 34-7. Figure 34-7(a) is the self-biasing method, in which the bias voltage is developed across the cathode resistor when the tube draws plate current. The capacitor shunting the resistor is used to keep normal signal variations in plate current from changing the bias, which would result in degeneration. It is the *average* value of plate current which supplies the bias. In the illustration, the voltages measured to ground are +1.5 at the cathode and zero at the grid. This is equivalent to a bias voltage of −1.5 from grid to cathode.

Instead of having the tube bias itself by means of its own plate current, the bias voltage may be furnished from the

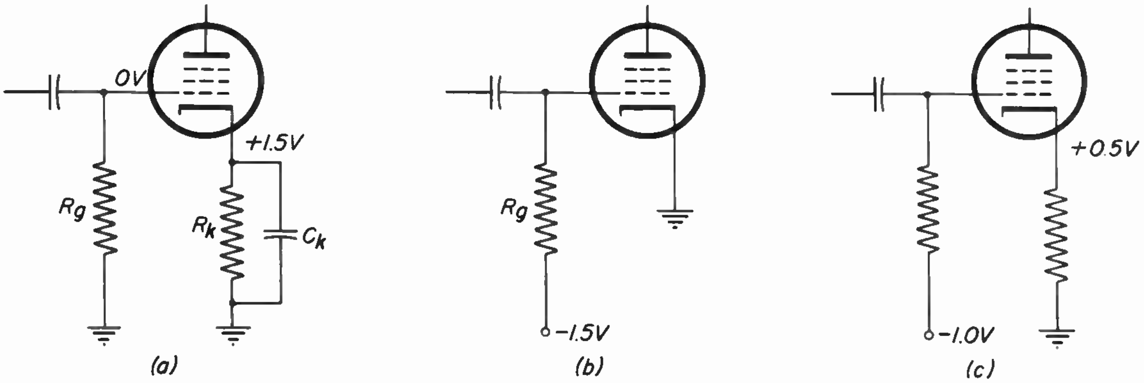

Fig. 34-7

power supply voltage divider circuit. Figure 34-7(b) shows the bias voltage applied to the grid return of the tube. Where this method is used the cathode is generally grounded, eliminating the cathode resistor and bypass condenser.

Figure 34-7(c) shows a combination of both bias methods. In this case only part of the total bias voltage is applied to the grid return (−1.0 volts), while a smaller value of resistor is connected in the cathode circuit (developing +0.5 volts to ground). The two voltages combine to give the −1.5 volts desired bias. In this case, no cathode by-pass capacitor is used, so that a small amount of degeneration results to give the stage greater stability.

When the bias voltage is supplied from the power supply, the grid returns of the various amplifier stages are connected to a bias distribution line, as shown in Fig. 34-8. The r-f, first, second and third i-f amplifier stages are connected to a grid bias distribution line supplying −1.5 volts to the grid circuits. It is customary not to connect the fourth i-f stage to this line, but to provide bias for that stage by means of a cathode resistor properly by-passed. The first, second and third i-f amplifiers are shown with unbypassed resistors in the cathode circuit.

In order to isolate the stages from each other so that there is no coupling or feedback of signal voltage from one stage to another through the bias distribution line, decoupling networks are

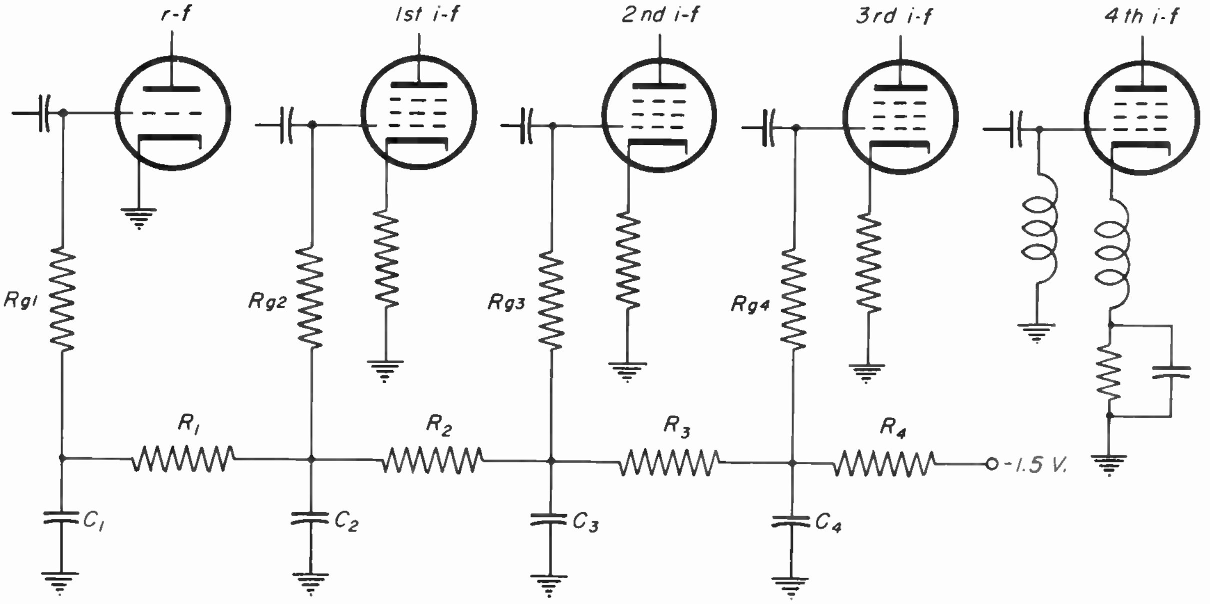

Fig. 34-8

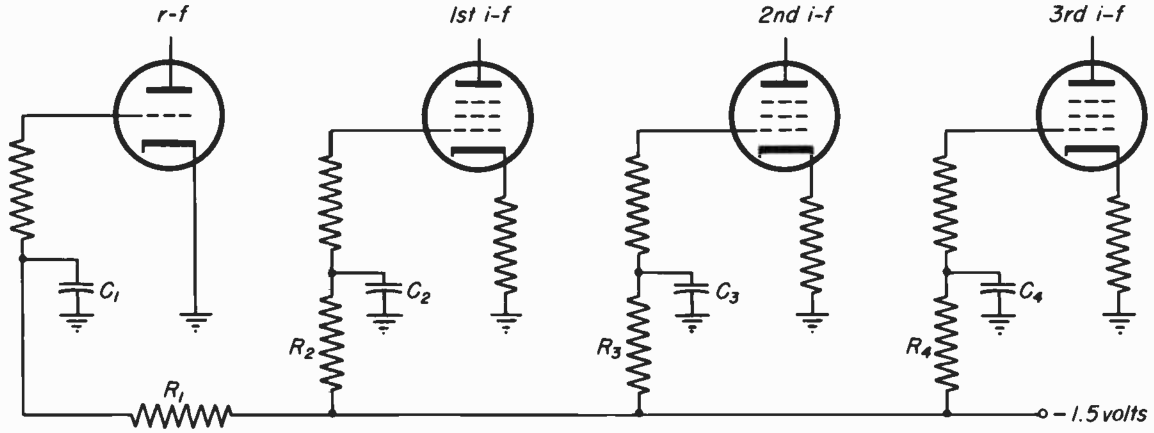

Fig. 34-9

connected in each stage. Resistor R_1 and capacitor C_1 keep the r-f signal from coupling into the i-f stages. Capacitor C_1 serves as the return to ground for the r-f signal, with R_1 as isolating resistor. Capacitor C_2 completes the ground return for the i-f signal in the first i-f stage, and, with R_1 and R_2, prevents coupling of feedback to the r-f or the other i-f stages. Similarly capacitor C_3 returns the i-f signal to ground in the second i-f stage and C_4 performs the same function for the third i-f stage.

Since the grid circuits draw no direct current, there is no voltage drop through any of the decoupling resistors or grid resistors; therefore, the −1.5 volts supplied to the bias distribution line appears at the grid of each stage connected to the line.

Another way of connecting the decoupling capacitors and resistors is shown in Fig. 34-9. In this arrangement the decoupling resistors R_1, R_2, R_3, R_4, each connect to an individual grid circuit, and are not in a common distribution line.

AGC Amplifier. – Where it is desired to have AGC over a wide range of input signal levels, an AGC amplifier may be included in the circuit to make available a higher AGC voltage. In circuits using an AGC amplifier the control voltage developed at the AGC rectifier is positive. This d-c voltage is directly coupled to the AGC amplifier. The action of the amplifier tube results in a reversal of polarity, so that the output is a negative voltage.

DIRECT AGC CIRCUIT.

34-4.—As shown in Fig. 34-10 this circuit controls the gain of the r-f amplifier and the first, second and third picture i-f stages by applying a negative bias to their grids proportional to the strength of the input signal. As a result of the AGC action, an almost constant output is maintained at the second detector over a wide range of input signals to the r-f stage.

The voltage input to the AGC circuit is taken from the full output of the fourth picture i-f stage, while the input to the second detector is taken from a tap on the coupling coil L103 at a point where the signal strength is only one-third that supplied to the AGC circuit. Additional adjustment of the amount of AGC voltage relative to signal strength is provided by the AGC switch S106.

The voltage developed by the AGC rectifier is produced across R123 (33K) R124 (150K) and R221 (56K) in the V107A grid circuit. The part of this voltage which serves for AGC is that developed across R124 and R221 in series, which is taken off to the line marked "to AGC Filter". The filter circuit eliminates noise impulses and a-c ripple, and the filtered output is applied to the grids of the r-f

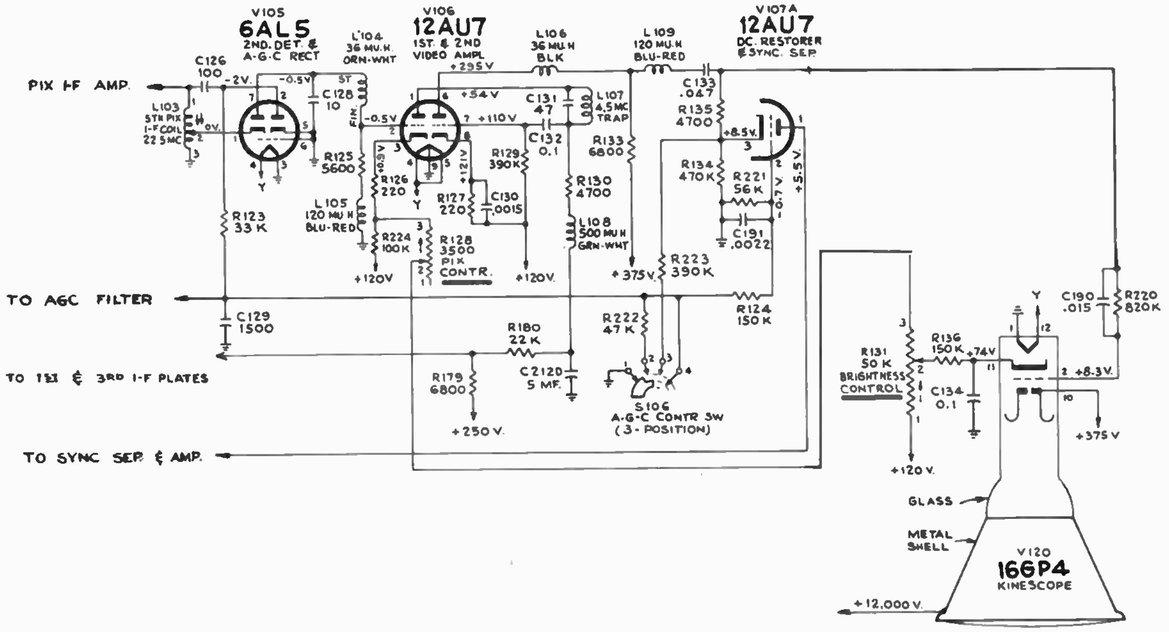

Fig. 34-10

and i-f stages (exclusive of the last i-f) as the AGC control bias.

The AGC Switch. – The AGC switch provides for operation in different signal strength areas. In Fig. 34-11 the switch connections are shown for each of the three positions. When maximum AGC is desired, the switch is set in position No. 1. In this position all switch connections are open. Where less AGC is desired, particularly in areas where impulse type of interference is experienced, the switch is set in position No. 2. In this position R222 (47K) is connected in parallel with the AGC resistors (R124 and R221 in series). This cuts down the AGC voltage considerably. In a very weak signal area, where maximum signal output is desired, the switch is turned to position No. 3. In this position the bias distribution line is grounded and AGC is completely removed; R223 then is connected to ground, paralleling R134 for a necessary change of cathode bias for V107A. It must be remembered that with AGC completely removed, the receiver could easily be overloaded if the input signal should exceed 200 microvolts.

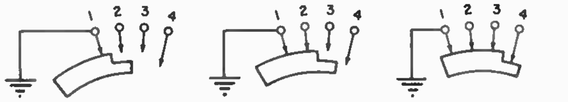

Position No. 1 *Position No. 2* *Position No. 3*

Fig. 34-11

It is interesting to note that there is a close relation between the AGC and sync circuits in the connection of the AGC resistors R124 and R221. Resistor R221 (56K) is the grid resistor for the sync separator, V107A. Since a portion of the AGC voltage is developed across this resistor, it provides an automatic bias which improves sync separation on strong signals at high contrast settings.

TYPICAL CIRCUIT WITH AGC AMPLIFIER

34-5. – Fig. 34-12 shows an AGC circuit that uses an AGC amplifier.

The signal source for the AGC voltage is taken from the first video amplifier stage. Video signal is coupled through R141, which is an isolating resistor, to the grid of the AGC rectifier (V108). This is a twin-triode 6SN7-GT, with one triode section functioning as a rectifier. The rectified signal voltage in the cathode circuit is direct-coupled to the triode

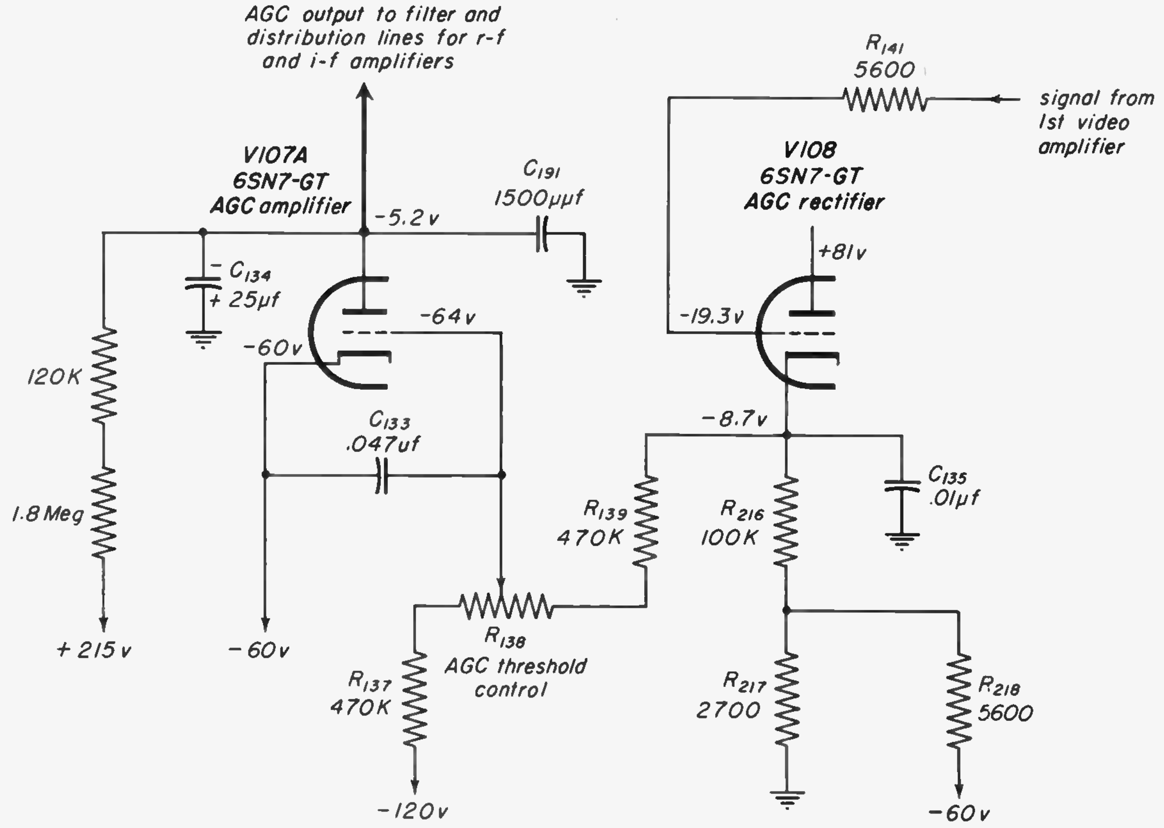

Fig. 34-12

section V107A, which is a d-c amplifier that has the function of amplifying the AGC bias voltage produced by the AGC rectifier. The output of the AGC amplifier connects to the AGC distribution line, feeding the amplified AGC bias voltage to the first and third picture i-f amplifier stages, and the r-f amplifier.

The composite video signal is applied to the grid of the AGC rectifier. However, the time constant of the resistors R216 and R217 with the bypass condenser C135 is long compared to the horizontal sync rate so that the tube is self-biased at a level to clip the sync pulses in the plate circuit. Therefore, the tube also serves as a sync separator.

The AGC voltage is produced in the cathode circuit of the AGC rectifier. The peak d-c voltage here, which corresponds to the peak level of the sync pulses, is the voltage source for the grid of the AGC amplifier. The AGC Threshold control (R138) is part of a voltage divider with R137 and R139 to adjust the amount of d-c voltage applied to the AGC amplifier grid. Additional filtering for the AGC voltage is provided by C133.

At the cathode of the AGC rectifier and grid of the AGC amplifier, the AGC voltage is a d-c voltage of *positive* polarity, and is proportional to the peak level of the sync pulses. When the video *signal increases*, due to a stronger r-f signal being received, the AGC voltage of the rectifier cathode goes more positive. This voltage applied to the AGC amplifier grid causes more plate current to flow in the amplifier, making its plate voltage fall, which is the same as making its output *AGC bias voltage go negative*. This negative-going voltage in the plate circuit of the AGC amplifier is applied to the grids of the r-f and i-f amplifier stages to reduce their gain.

In order to provide negative voltage in the AGC amplifier output, to bias the stages controlled by AGC, the plate of the AGC amplifier has a *negative potential.* However, plate current can flow because the cathode is more negative than the plate, leaving the plate positive with respect to the cathode. The control grid is even more negative than the cathode, providing negative bias with respect to cathode in the AGC amplifier. Although the AGC amplifier plate is connected to +215v through 1.92 megohms, this is such a large resistance that the plate potential is negative when plate current flows, as the plate voltage drops toward the negative cathode voltage.

When the grid goes in a positive direction, due to increased cathode output voltage in the AGC rectifier, the AGC amplifier's plate voltage falls and goes more negative. In other words, the AGC amplifier stage amplifies the change of d-c voltage in the AGC rectifier cathode. As an example, suppose that the grid voltage is driven from −64 volts to −62 volts, which is a 2 volt change in the positive direction; because of increased plate current the AGC amplifier might go from −5 volts to −15 volts.

AGC Threshold Control. – The amplification of the AGC amplifier stage is controlled by the adjustment of its fixed grid bias voltage, which is set by the AGC Threshold Control R138. The adjustment of the AGC Threshold control is checked as follows:

1. Tune in a strong signal, sync the picture and turn the PICTURE control to the maximum clockwise position. Turn the BRIGHTNESS control counter-clockwise until the vertical retrace lines are just visible.

2. Momentarily remove the signal by switching off channel and then back. If the picture reappears immediately, the receiver is not overloading due to improper setting of the AGC Threshold control. If the picture requires an appreciable portion of a second to reappear, R138 should be readjusted.

3. For the proper adjustment, set the PICTURE control at the maximum clockwise position and turn R138 fully clockwise. The top one-half inch of the picture may be bent slightly.

4. Then turn R138 counterclockwise until there is a very, very slight bend in the top one-half inch of the picture as indicated in Fig. 34-13. Next turn R138 clockwise just enough to remove this bend.

Fig. 34-13

The horizontal bend or pulling at the top of the picture is due to compression of the sync amplitude in the first video amplifier. It is the result of incorrect setting of the AGC Threshold control, making the AGC bias voltages for the r-f and picture i-f stages insufficient. This causes excessive gain and excessive signal input to the first video amplifier, where limiting action clips or compresses the sync pulses, causing the bend in the picture.

If the signal is very weak, the above method of adjustment may not work, since it may be impossible to obtain sufficient signal to make the picture bend. In this case, turn R138 until the snow in the picture becomes more pronounced, then back off the control until the best signal to noise ratio is obtained. This is illustrated in Fig. 34-14.

Wherever possible, the AGC Threshold control adjustment should be made on a strong signal. If the control is set for too little AGC on a weak signal, the receiver may overload when a strong signal is received.

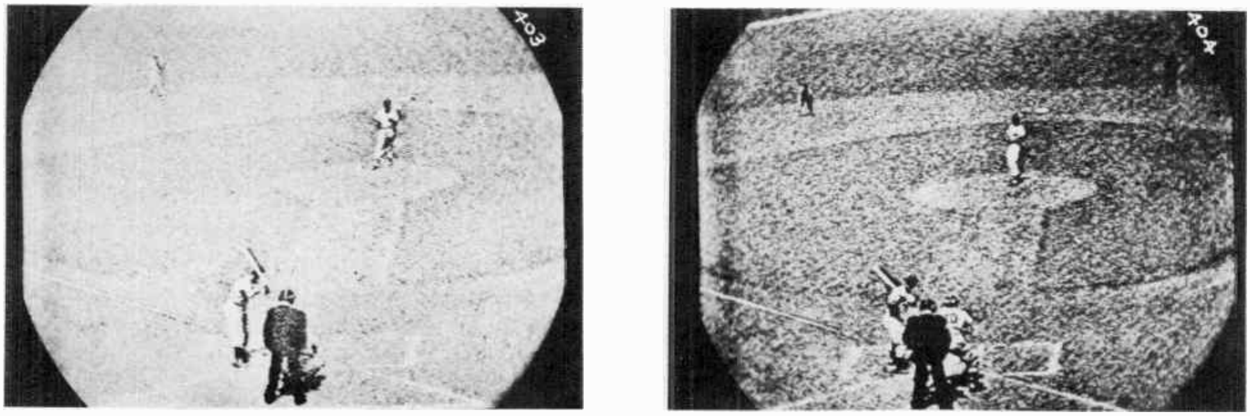

Normal setting of AGC

Incorrect setting of AGC

Fig. 34-14

KEYED AGC CIRCUIT

34-6. – The keyed AGC circuit shown in Fig. 34-15 is similar to the amplified AGC circuit in Fig. 34-12 but the AGC amplifier here is keyed on and off by the horizontal output pulses, so the tube is made to conduct only during the intervals corresponding to flyback time. The advantage of keyed AGC is less susceptibility to interfering noise pulses, which can build up too high an AGC voltage.

Referring to Fig. 34-15, the signal source for AGC and also for sync is taken from the output of the video amplifier. It is applied to the grid of tube V113. This triode section corresponds to the AGC rectifier that was shown in

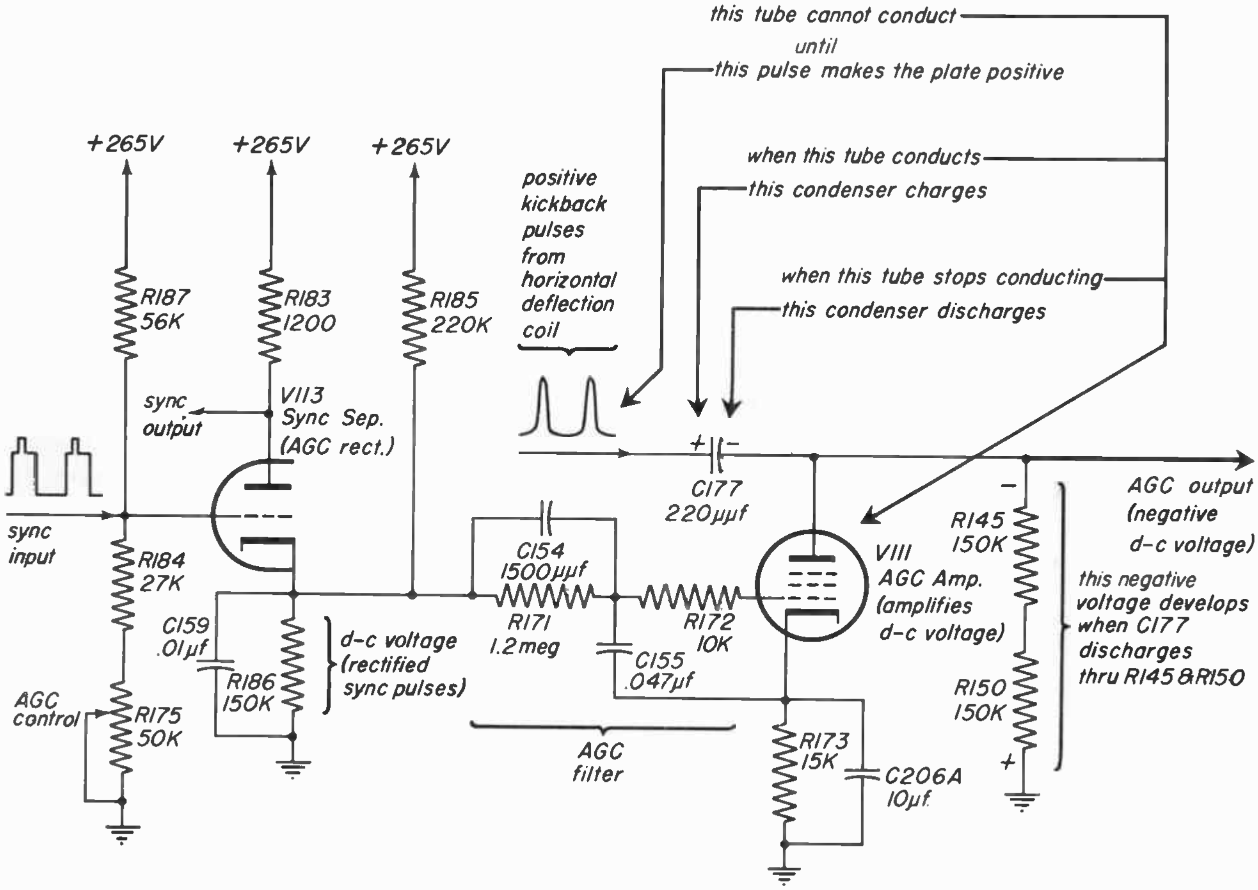

Fig. 34-15

Fig. 34-12. The AGC control R175 varies the amount of input signal and the bias for this triode section of V113. The circuit develops a cathode voltage proportional to the sync pulse level, which indicates strength of the carrier signal. This d-c cathode voltage across R186 is direct-coupled to the grid of the 6CB6 AGC amplifier V111, through R171 and R172, which with C154 and C155 also filter this voltage. As a result, a d-c bias voltage that indicates the signal level is applied to the AGC amplifier.

The AGC amplifier tube can conduct plate current only when the plate is pulsed positive by the flyback pulse taken from the horizontal output circuit and coupled by C177. Every time the plate is made positive by the pulse, plate current flows to charge C177, putting a negative charge on the side of the condenser connected to the 6CB6 plate. Between pulses the AGC amplifier cannot conduct. During this time C177 discharges through R145 and R150, providing a voltage of negative polarity with respect to ground. This is the AGC voltage. The AGC bias is tapped off from here, filtered and connected to the AGC distribution lines for the i-f and r-f amplifiers.

AGC Adjustment. – The AGC control R175 adjusts the AGC circuit to provide the amount of AGC required for signal conditions in different locations. To check the adjustment of this control, tune in a strong signal and sync the picture. Momentarily remove the signal by switching off channel and then back. If the picture reappears immediately, the receiver is not overloading and R175 is set correctly. If the picture bends excessively or does not appear immediately R175 should be readjusted. Turn the control until there is a very slight bend in the picture. Then back off the control just enough to remove this bend. This should be done on a strong signal. If the signal is weak on all stations this method of adjustment may not be possible. In this case turn the AGC control until the snow in the picture becomes more pronounced and then back it off until the best signal-to-noise ratio is obtained.

PART II – TROUBLESHOOTING AGC CIRCUITS

TROUBLES DUE TO THE AGC CHANNEL

34.7. – The AGC circuit develops a negative bias voltage which controls the gain of the picture i-f amplifiers and the r-f amplifier. Trouble in the AGC circuit alters this bias voltage and changes the gain of the r-f and i-f stages. Since these stages amplify the picture signal, the visible symptom of AGC trouble is an increase or decrease in the strength (contrast) of the picture appearing on the kinescope screen.

As illustrated in Fig. 34-16, in this lesson the AGC channel is divided into two parts: the AGC circuit itself where the negative control bias is produced, and the bias line which distributes the bias voltage to the stages controlled by AGC. First a trouble can be localized to the AGC channel. Then the trouble is localized further either to the AGC circuit that produces the bias or to the bias distribution line.

The symptoms produced by trouble in the AGC channel are:

1. A blank raster – this is produced when an excessive bias, greater than the cutoff bias of the controlled stages, is developed. This stops conduction in these controlled stages completely, so as to prevent passage of signal at this point. The sound output may also be reduced or cut off.

2. An overloaded picture – this is produced when little or no bias is developed, allowing the picture stages to operate at maximum gain. The i-f stages are overloaded, clipping sync pulses, and producing the characteristic overloaded, out-of-sync picture. It may be accompanied by buzz in the sound.

These are the most usual defects. Occasionally, the following may be encountered:

3. A low contrast picture. This may be produced when the AGC channel develops too high a bias, which, although not high enough to cut off the picture, will limit the gain of the picture i-f stages, so

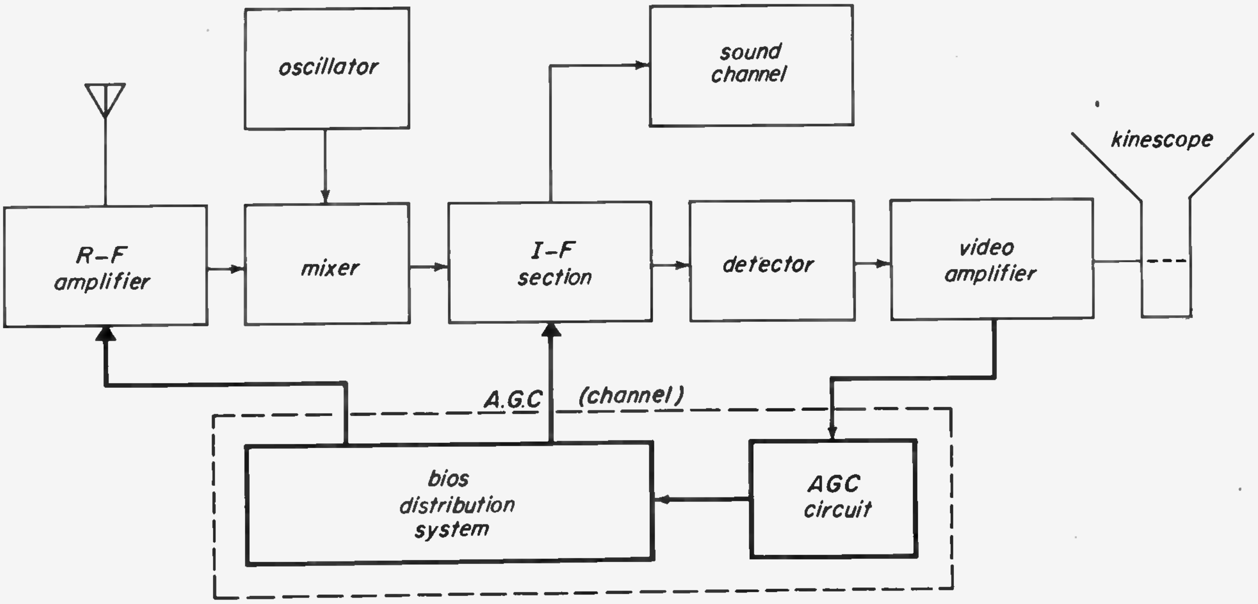

Fig. 34-16

that sufficient contrast cannot be obtained.

4. Excessive contrast. The picture is on the verge of overloading and tends to bend. This occurs when the AGC channel produces *insufficient* bias voltage. There is not enough bias to reduce the i-f and r-f gain by the correct amount for the strength of signal being received. Note, however, that the bias voltage is not low enough to cause severe overloading.

How the Sound is Affected by AGC Troubles. -- The effect of incorrect bias on the sound output depends upon whether the sound signal passes through any stages controlled by the AGC. If the sound takeoff point is after the converter stage, it will only be affected by changes in r-f amplifier gain. In this case sound output will vary little with changes in bias. When the sound takeoff is in the i-f strip or in the video section, the sound passes through controlled i-f stages, and sound output will vary greatly with changes in AGC bias. Decreasing bias will cause increased sound output and may allow picture information (sync pulses) to get into the sound and cause buzz. Increasing bias will reduce the sound output and may cut it out completely.

Relation Between AGC Channel and Picture Channel. -- The symptoms just described result from the failure of the receiver to amplify the picture and sound signals properly. They can be caused by defects in either the picture or AGC channels. Defects in the AGC channel are able to produce such symptoms because the AGC circuit controls the amplification of the r-f and i-f circuits by controlling the bias. However, the same symptoms could be caused by defects in the r-f and i-f circuits.

In addition, it should be noted that a defect only in the r-f and i-f circuits can cause the AGC to develop the wrong value of bias voltage. This happens because the value of bias voltage that the AGC produces depends upon the strength of signal reaching the input to the AGC circuit. This signal is amplified in the r-f and i-f circuits before it can arrive at the AGC input.

Because of the interaction between the AGC circuit and the r-f and i-f circuits it is helpful to use some tests to localize a trouble to either the AGC circuit or the picture channel. These tests will now be considered.

TESTS FOR LOCALIZING AGC TROUBLES

34-8. Localizing No Picture-No Sound Troubles to AGC Channel. -- Let us analyze the localizing procedure when the symptom of trouble is a blank raster, and little or no audio output – a "no pix, no sound" trouble. It is possible that this is caused by the picture i-f stages being cut off by an excessive bias from the AGC channel.

To determine if this is the case, any one of the following checks can be made:

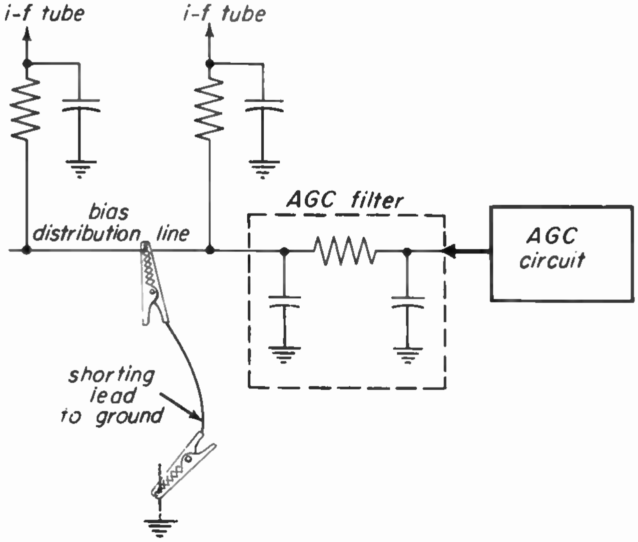

Fig. 34-17

1. Short the bias line to ground, as in Fig. 34-17. If the picture i-f amplifier's grid voltage has been held at cutoff, the short will reduce the bias to zero. If there is no defect in the picture channel, the picture i-f amplifier will now operate at maximum gain and produce an overloaded picture on the screen. Sound output will also be heard from the speaker. This establishes the trouble in the AGC channel.

2. When the bias is produced by an AGC amplifier tube, an alternative method is to remove the AGC amplifier tube. The bias is produced by conduction of this tube. Removing the tube will reduce the bias to zero, and allow picture and sound to appear if there is no defect in the picture circuit. This establishes the trouble in the AGC channel. Sometimes, the AGC amplifier is combined in the same envelope with some other stage. Removing the tube will disable some other function of the receiver so that a picture cannot be seen. However, if there was no sound because of cutoff bias from the AGC, the sound will appear when the tube is removed, and this indication will establish the trouble in the AGC channel.

3. A third method is to connect a bias box to the bias line. As shown in Fig. 34-18, connect the *negative* lead to the *bias line*, and the *positive* lead to *ground*. Vary the output from the bias box from its maximum to its minimum value. If there is no defect in the picture channel, a picture will appear, and the contrast will increase as the bias is reduced; as the bias is reduced still further the picture will overload, to an extent depending upon the amount of signal available. Since this tells us the picture channel is operating properly, the trouble is localized to the AGC channel.

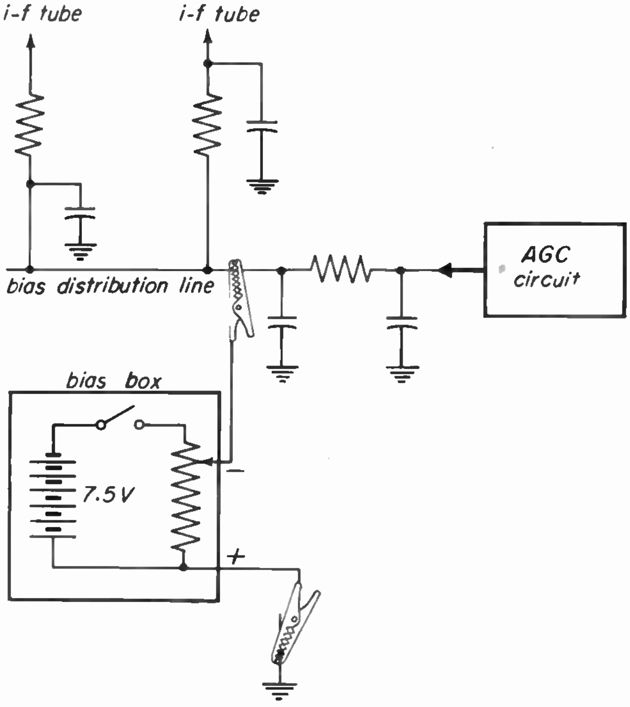

Fig. 34-18

Use and Construction of a Bias Box. -- In receivers which do not have an AGC system, the contrast is varied by manually varying the gain of the picture r-f and i-f amplifiers. The contrast or picture control does this by tapping off a portion of a negative supply voltage and applying it to the bias line. A bias box is a source of continuously variable d-c voltage that allows us to do this same thing in AGC-controlled receivers. In receivers which have an AGC system, the gain of the picture channel cannot be controlled except through the AGC action. In order to temporarily eliminate the AGC system, we use the bias box to manually vary the gain of the picture channel by applying any desired negative voltage to the bias line. In this way, control of the picture amplifiers is taken away from the AGC circuit, allowing their gain to be set and remain at the value selected by the bias box. This makes it possible to check the operation of r-f and i-f amplifiers independent of AGC.

A bias box can be constructed by connecting a number of 1.5 volt cells in series across a potentiometer, and taking the output voltage off the adjustable tap. A switch disconnects the battery from the potentiometer when it is not in use. The current drain is low enough so that flashlight cells or even penlight cells can be used. A schematic diagram of the bias box is shown in Fig. 34-18. The bias box should have a d-c output adjustable from zero volts to a value high enough to almost cut off the picture signal amplifiers. An output of 9 volts, made by connecting six 1.5 volt cells in series, is usually sufficient.

The size of the potentiometer to use is determined by two considerations. The lower the resistance of the potentiometer, the more effectively the bias box will take control away from the AGC circuit. The higher the resistance, the lower the current drain on the batteries. If the bias box is to be used for general troubleshooting, a resistance value of 50K to 1 megohm can be used with good results. If the bias box is for i-f alignment, a resistance of 1,000-10,000 ohms is better.

In receivers having a negative supply voltage available, this can be used for manual control of the receiver gain, just like the bias box. This is illustrated in Fig. 34-19. Use a potentiometer of about 10,000 ohms and connect it from the negative supply voltage to ground. A variable negative voltage is now available between the center tap of the potentiometer and ground which can be applied to the bias line and used to control the bias.

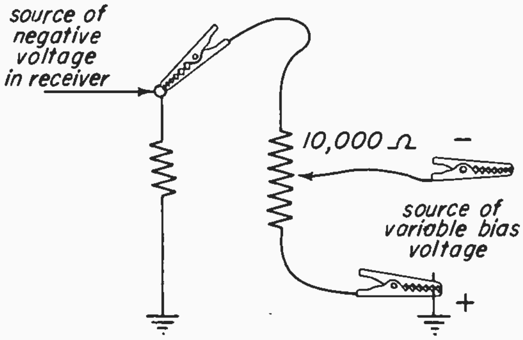

Fig. 34-19

In some receivers, which have available a negative supply voltage and an AGC control potentiometer, this can be connected to the negative voltage supply so that the potentiometer can operate as a manual bias control.

What is Normal Bias? -- The value of bias at which a good picture appears will vary with the strength of the received signal. The bias, whether it is supplied by a manual gain control system, or by an AGC system, must be of a proper value to limit the gain of the picture channel amplifiers for the signal being received. In a receiver with manual gain control, the user will set the bias, with the picture control, so that the receiver amplifies as much as required to produce the desired contrast, without overloading any stage the signal passes through. An increase in signal requires that the bias be increased to prevent overloading. A properly functioning AGC system must accomplish this automatically. It is a good idea to measure this bias in a number of good receivers, and for a variety of input signal strengths. The bias varies according to the tubes used and the amount of signal at the antenna terminals. This data should be retained to provide information as to the normal bias value. Typical values of bias voltage on the distribution line range from approximately zero to about minus twenty volts.

Localizing Overloaded Picture Troubles to the AGC Channel. --Let us analyze the localizing procedure when the symptom of trouble is an overloaded picture, which may be accompanied by poor sound and buzz. If the picture is completely overloaded, the trouble is no bias for the picture channel.

The bias voltage developed by the AGC channel depends upon its input signal from the picture channel. In addition, if there is no signal input to the AGC channel, there will be no bias output. The overloaded picture, then, is due to one of two possibilities:

1. The picture channel is defective and the AGC channel does not have the input signal needed to develop a bias voltage.

2. The AGC channel is itself defective and so produces no output.

To localize the trouble, we first examine the operation of the picture channel itself by controlling its gain by the bias box. With the bias box connected as in Fig. 34-18, vary the output from minimum to maximum. As the bias is increased it will start controlling the gain of the picture channel, stop the overload, and produce a good picture. Finally, when the bias is still further increased, it will cut off the picture and produce a blank raster.

The bias at which a good picture appears should be measured and compared to the normal value of bias for that signal input. If the bias voltages are approximately the same, the picture channel is operating properly and the trouble is localized to the AGC channel. If the bias is much lower than normal it indicates that the gain of the picture channel is low, probably because of an inoperative stage, and therefore the AGC channel does not have the proper signal input to produce the correct bias.

If there is no change in the picture when the bias box voltage is varied, this may be due to a short across the bias line to ground, which prevents the bias voltage from controlling the picture channel.

Low Bias and Excessive Bias. – To localize either trouble to the picture channel or the AGC channel, the bias box is connected to the bias line to vary the bias independent of AGC. The operation of the picture channel can then be judged by comparing the picture with the bias required to produce that picture.

Let us assume that for a given signal a good receiver produces a good picture with 4 volts of bias. This information is obtained beforehand on good receivers. Now, suppose that for the same signal input level and with the same type of receiver the bias box voltage must be set to 2 volts to produce the same amount of picture contrast. This means the gain of the picture channel in the receiver is below normal, since the bias must be reduced below normal to obtain the normal picture contrast. The low gain of the picture channel may be due to a defective amplifier stage. With less AGC bias in the other stages, though, the picture channel can amplify the signal to produce the same total output.

As another example, suppose the bias box voltage must be made more negative than the normal value, to prevent the picture from bending or overloading. This also would indicate a trouble in the picture channel because it could not produce a normal picture with normal bias. The trouble may be a defective i-f or video stage that overloads too readily, or a leaky coupling condenser in the i-f strip reducing the voltage on the bias line.

If the bias box voltage needed to produce a good picture is the same as the normal bias, this indicates the trouble is not in the picture channel. When the bias box is removed, the AGC channel can function and should produce the same bias voltage on the distribution line. If not, the trouble is in the AGC channel.

Excessive Signal Input. -- Sometimes the signal at the antenna terminals is so great that it cannot be controlled even when the AGC channel is operating properly. Buzz and a slightly overloaded picture will result. If the receiver location is close to the transmitter, this is a definite possibility and should be investigated before servicing the receiver. Attenuate the antenna input signal, and if this produces a good picture, without the slightest trace of snow, then the signal input on that particular channel is probably excessive and should be attenuated. However, before this can be positively established, the bias on the r-f amplifier should be checked to eliminate the possibility of very low r-f bias. Conversely, too high a bias on the r-f amplifier will produce snowy pictures even if there is adequate signal input.

LOCALIZING TROUBLES TO THE BIAS LINE OR TO THE AGC CIRCUIT

34-9. -- Having narrowed the trouble down to the AGC channel the next step is to localize the trouble further to either the AGC circuit itself or the bias distribution system. This is done by making two voltage checks: one at the output of the AGC Circuit, and one at the point where bias is taken off to the i-f tubes.

Consider the representative circuit shown in Fig. 34-20. The voltage at A is the total output of the AGC system. Point B is the i-f bias take-off point. If there is no voltage at point A, the trouble is in the AGC circuit, since there is no voltage output from the AGC system.

If there is voltage output at point A, but no voltage at point B, then the bias voltage is being lost in the bias distribution line. This could be caused by a short in the filter condensers C_2 or C_3; or an open circuit in the line..

If there is a normal voltage at points A and B, but a higher than normal negative voltage at C, the r-f bias take-off point, there is an open circuit in the r-f bias voltage divider circuit.

TROUBLESHOOTING THE BIAS DISTRIBUTION NETWORK

34-10. -- When the bias voltage is completely lost in the bias line, the trouble is due to either an open in the bias line, or a shorted capacitor across the line.

If the i-f bias voltage is low, it is necessary to determine whether this is due to incorrect division by the voltage divider in the bias distribution network, or insufficient voltage delivered to the voltage divider by the AGC circuit.

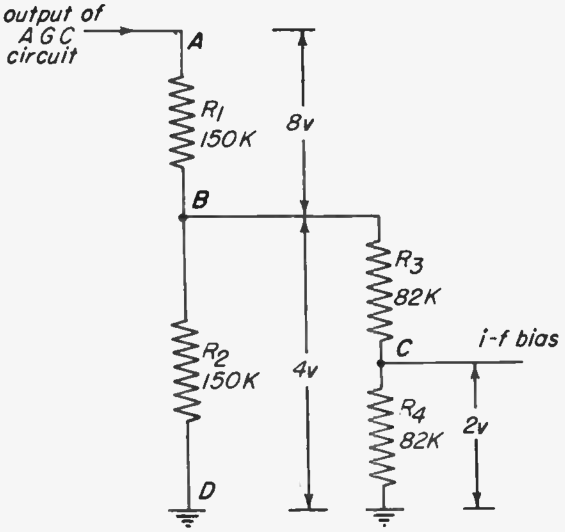

Fig. 34-21

Consider the circuit shown in Fig. 34-21 and let us assume that only 2 volts is measured at the i-f bias take-off point

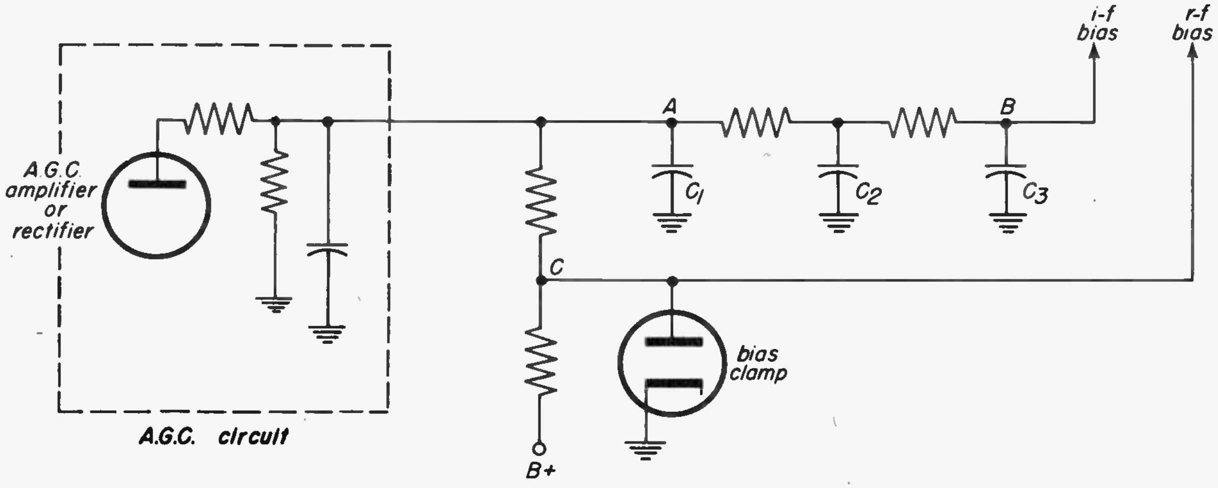

Fig. 34-20

C, which is too low. If the distribution system is suspected, it can be analyzed in the following way. Using the values given in the schematic diagram, roughly compute the voltages that should exist at various points of the voltage divider based on 2 volts at point C. Since R3 and R4 are equal, the voltage at point B should be twice the voltage across R4, or 4 volts. R3 and R4 add to approximately 150,000 ohms, and this is in parallel with the 150,000 ohms of R2, so there is about 75,000 ohms across points B and D. The resistance of A-B is twice that of B-D, so that if there is 4 volts across B-D, there should be 8 volts across A-B, making a total of 12 volts from point A to the ground point D. If 12 volts is measured at A, the voltage divider is functioning properly. Therefore, the trouble of low i-f bias at point C is due to low voltage output from the AGC circuit for the divider, since the divider is functioning normally. If the voltage measured at A is higher than 12 volts, then the trouble of low i-f bias at point C is due to the fact that the output voltage of the AGC circuit is incorrectly distributed by changed resistance values or shorted capacitors in the divider network.

TROUBLESHOOTING THE AGC CIRCUIT

34-11. -- Up to this point, we have discussed how to analyze and determine whether the symptom of trouble is caused by a defect in the AGC circuit. We will assume that this has been done and now discuss the troubleshooting of the AGC circuit itself.

Direct AGC. -- This circuit is one in which the AGC bias voltage is taken directly from the output of the AGC rectifier, without amplification, as in Fig. 34-22. This type of circuit cannot have a defect that develops cutoff bias. The bias is developed from rectified signal, and if the picture i-f stages were to be cut off, this would remove the source of the bias voltage. Furthermore, localization of a trouble to this AGC circuit also isolates it to the AGC rectifier, since this is the only stage in a direct AGC circuit.

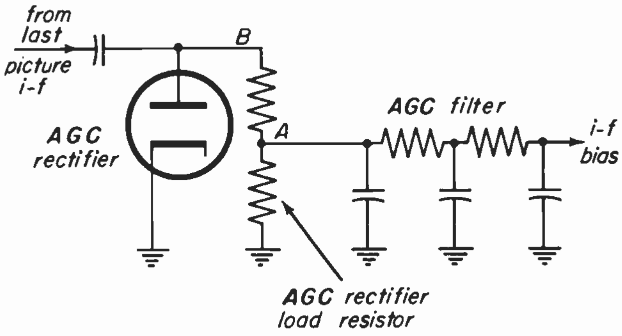

Fig. 34-22

Referring to Fig. 34-22, if there is no voltage at the output of the rectifier, measured at point A, the bias line should be checked for a short. Do not measure at point B because the r-f signal appears at this point and the meter will short out the signal. If the trouble is not due to a short at the output then the AGC diode is not conducting. This can be due to a bad tube, lack of input signal, or a defect in the diode load circuit.

Amplified AGC. -- If trouble is localized to this AGC circuit, it must be further localized to the rectifier or amplifier stage. As shown in Fig. 34-23, in AGC circuits of this general type, the AGC rectifier produces a d-c voltage which varies with the signal strength. The AGC amplifier then amplifies and inverts this voltage so that it has the proper polarity and magnitude for use in controlling the bias of the receiver. The AGC amplifier, therefore, has the function of amplifying a d-c control voltage, rather than a signal. A defect in the AGC amplifier affects the amplification of this control voltage and its final value at the output, with the result that the gain of the receiver is not at the correct level.

No Bias Condition. -- If there is no voltage output at the plate of the AGC amplifier, it is possible that the load resistor is being shorted by a shorted output filter capacitor. Its usual connection is indicated by C_3 in Fig. 34-23. This can be determined by resistance checks. If the trouble is not a short in C_3 then there is no voltage output because the AGC amplifier is not conducting, and therefore no voltage drop across its load resistor R_1. In order for this tube to con-

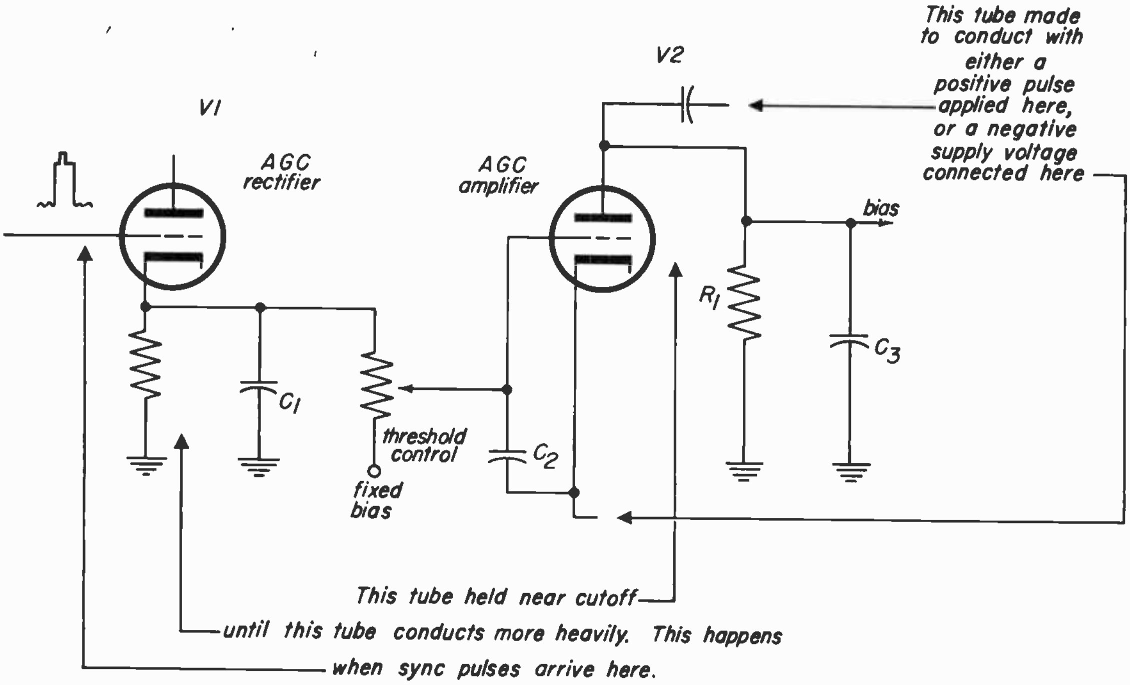

Fig. 34-23

duct, it must have either a positive pulse on the plate, or a negative supply voltage on the cathode, depending upon the particular circuit arrangement. These two circuit arrangements are very similar as far as troubleshooting is concerned Either circuit must operate with its plate returned to ground so that a negative bias voltage is available. In one type of circuit, the amplifier tube is made to conduct with a negative voltage, from the power supply, applied to its cathode. In the other arrangement, a positive pulse, from the horizontal output circuit, is coupled to the plate. This flyback pulse is a very sharp pulse of very short duration and very high peak amplitude, but the presence of the pulses can be determined with an output meter. The meter will give a reading depending upon the average value which is about 50-75 volts, measured on the 250 volt scale.

To repeat, then, if the AGC amplifier tube does not conduct there is no voltage across the plate load. If the tube has either the required positive plate pulse, or negative cathode voltage, and the tube is good, then it is not conducting because of cutoff bias voltage between the grid and cathode. This can be checked by momentarily shorting the grid to the cathode. Whatever bias there was on the tube will now be reduced to zero. If the trouble was high grid bias, the tube will now be able to conduct at maximum and produce maximum negative plate voltage output. This excessive output bias voltage will cut off the picture and sound and leave a blank raster, establishing that the reason for the non-conduction of the AGC amplifier tube was its high bias.

To find out why the AGC tube is being held cut off, we should recall that this is a d-c amplifier circuit and the voltages on the grid of the amplifier are determined by the amount of conduction of the stage to which it is connected. The AGC amplifier fixed bias is normally near cutoff. The grid of the AGC amplifier is direct-coupled to the cathode of the AGC rectifier, and when current flows in the rectifier cathode circuit it makes the bias on the AGC amplifier less negative. Current flow in the rectifier's cathode circuit develops a positive voltage to ground, which overcomes the negative bias on the amplifier, making the total bias on this stage less negative. This means that in order for the amplifier to conduct, the rectifier must conduct. The rectifier needs signal voltage to make it conduct.

Having determined then that the reason for no AGC bias output is that the AGC amplifier tube is not conducting because it is held cut off, there are two possibilities for this condition:

1. The AGC rectifier is not conducting enough to overcome the fixed negative bias on the AGC amplifier, or,
2. The fixed bias is higher than normal because of some defect in the fixed bias voltage divider to the AGC amplifier tube.

These possibilities can be checked by making resistance and voltage measurements of the voltage divider in the amplifier circuit, and by a check of the AGC rectifier tube and its electrode voltages.

Excessive Bias Condition. -- If a no picture – no sound trouble has been localized to the AGC circuit, it indicates that the AGC amplifier is producing high bias because of excessive conduction. This can happen because of insufficient grid-cathode voltage on the AGC amplifier stage. One way to check this is to connect the bias box to the grid and cathode of the AGC amplifier, and adjust the negative voltage over its range. If a good picture appears on the kinescope at some output from the bias box, this shows that insufficient negative grid voltage was supplied to the AGC amplifier, due to a defect either in the bias network of the AGC amplifier, or in the AGC rectifier which is directly coupled to the amplifier. If no voltage output can be measured from the bias box when it is connected, then the AGC amplifier's grid bypass condenser is shorted or the tube itself has an internal grid to cathode short. The bias box control should be turned very slowly, to allow the filter condenser in the plate of the AGC amplifier time to follow the change in voltage.

Another way to determine the above, without using the bias box, is to measure the voltage between the grid and cathode of the AGC amplifier tube. This voltage should be enough to limit the conduction of the AGC amplifier tube to a certain amount depending upon the incoming signal. It should be somewhere between zero and approximately ten volts, which is the approximate cutoff voltage, depending upon the type of tube used. However this requires a knowledge of the voltages to expect. These can be obtained from the service data or a tube manual. The bias box method is more general, and does not require a knowledge of the voltages involved.

If it is determined by the above tests that the defect is due to insufficient negative grid voltage on the AGC amplifier, then the trouble is either in the voltage divider in its grid circuit, or in the AGC rectifier circuit. If there is some defect in the AGC rectifier circuit which causes it to conduct too much, the positive rectifier output voltage will overcome the fixed negative voltage applied to the AGC

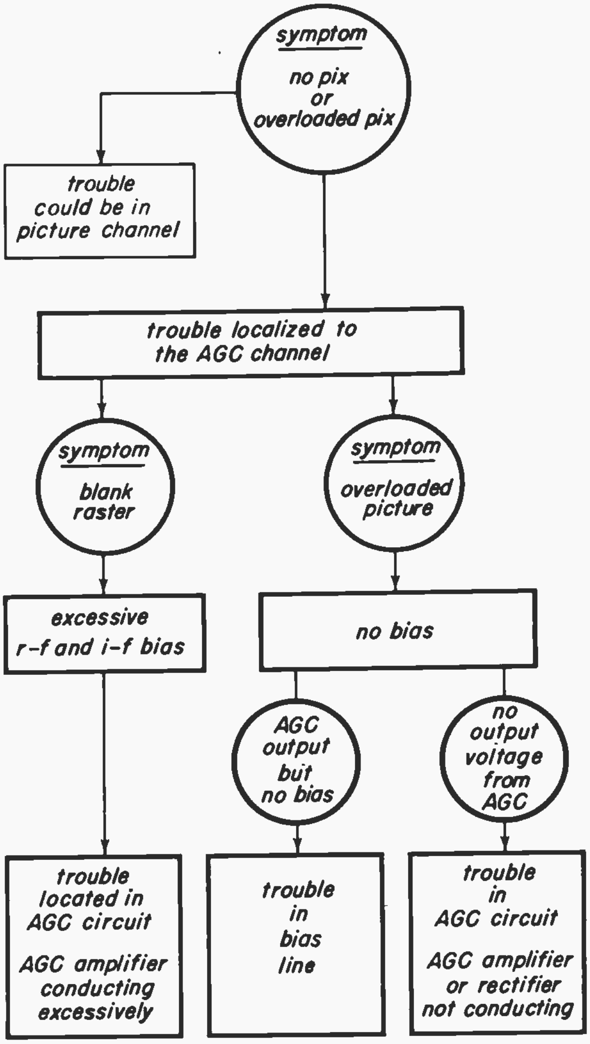

Fig. 34-24

amplifier, causing excessive plate current and excessive output bias voltage.

Summary. -- The tests and localizing procedures described in this lesson for AGC troubles are summarized here with the aid of the block diagram in Fig. 34-24. The symptom on the kinescope screen is analyzed by one of the tests described to localize the trouble to either the AGC or picture channel. A blank raster may be caused by high bias from the AGC channel. If this is the trouble, shorting the bias line to ground will remove the high bias and allow an overloaded picture to appear. This localizes the trouble to the AGC channel.

An overloaded picture may be caused by no bias from the AGC channel. If this is the trouble, substituting a fixed bias from the bias box will allow a picture to appear. This localizes the trouble to the AGC channel.

Once the trouble is established in the AGC channel it is further localized. If the symptom is a blank raster, it is being caused by excessive bias from the AGC channel, and is due to excessive conduction in the AGC amplifier.

If the symptom is an overloaded picture, this is caused by no bias from the AGC channel. The trouble is either in the AGC circuit or in the bias distribution line. If there is no voltage at the input to the line (output of the AGC circuit), the trouble is in the AGC circuit. In direct AGC the trouble is probably no conduction in the AGC rectifier; in an amplified AGC circuit the trouble is probably no conduction in the AGC amplifier or rectifier.

If there is voltage at the input to the bias line, but no voltage at its output, then the trouble is in the bias line.

If the condenser in the AGC filter opens, the fact that the AGC voltage is not filtered enough allows the bias voltage to vary too rapidly. This may cause sync buzz in the sound output or produce regular pulsations of the picture intensity, equivalent to "motorboating" of the picture. When a trouble of this kind is encountered, the AGC filter condensers can be checked as a possible source of the trouble.

◆

NOTES

NOTES

WATCH WHERE YOU'RE GOING

NATIONAL SAFETY COUNCIL CHICAGO. • PRINTED IN U S A

Cut out [illegible]

RCA MODELS
7T103, 7T104, 7T112, 7T122
7T123 AND 7T124

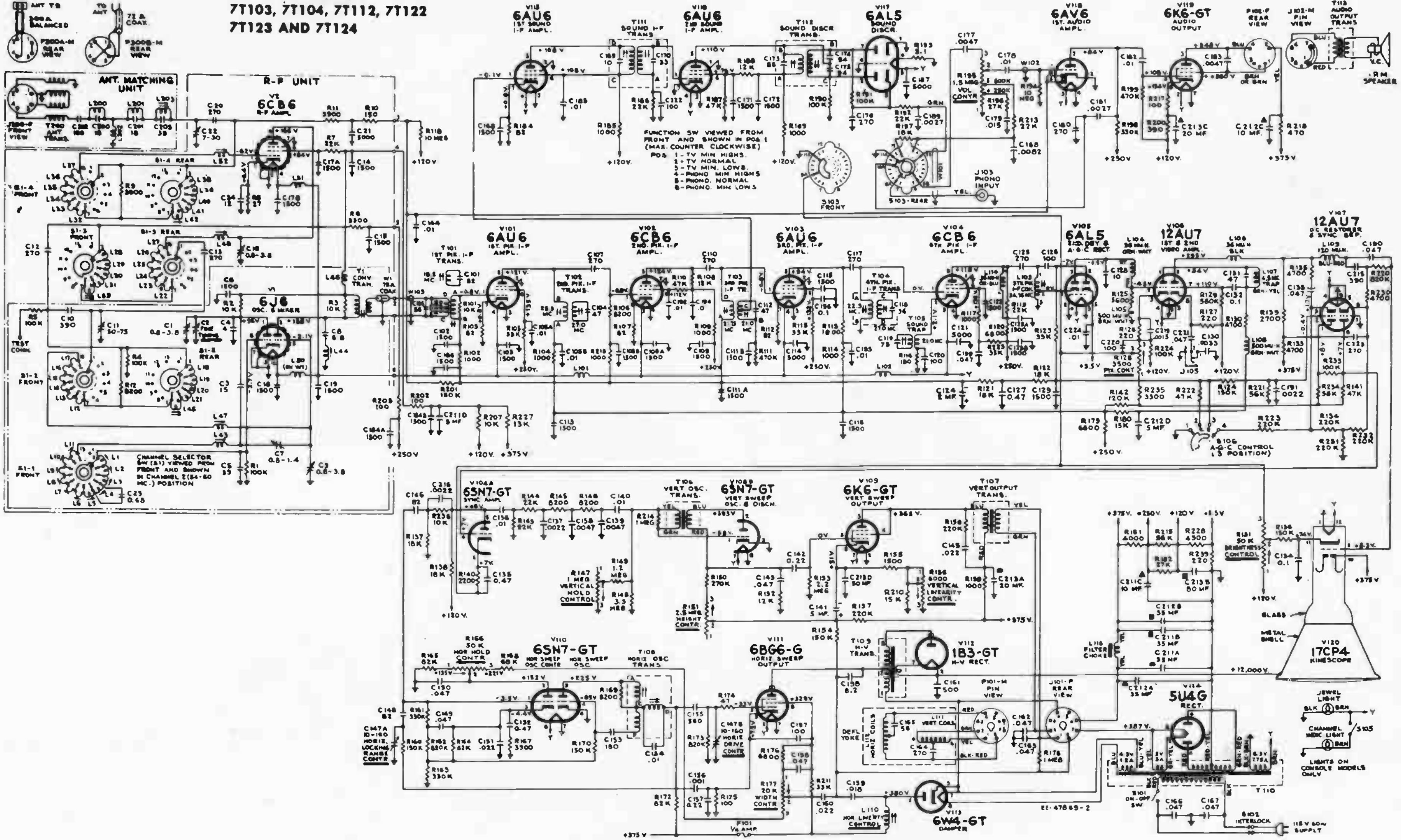

All resistance values in ohms. K = 1000.

All capacitance values less than 1 in MF and above 1 in MMF unless otherwise noted.

Coil resistance values less than 1 ohm are not shown.

Direction of arrows at controls indicates clockwise rotation.

In some receivers, substitutions have caused changes in component lead color codes, in electrolytic capacitor values and their lug identification markings.

All voltages measured with "Volt-Ohmyst" and with no signal input. Voltages should hold within ±20% with 117 v. a-c supply.

HALLICRAFTERS MODELS 17814 (RUN 1)
& 20882 (RUNS 1 & 2)

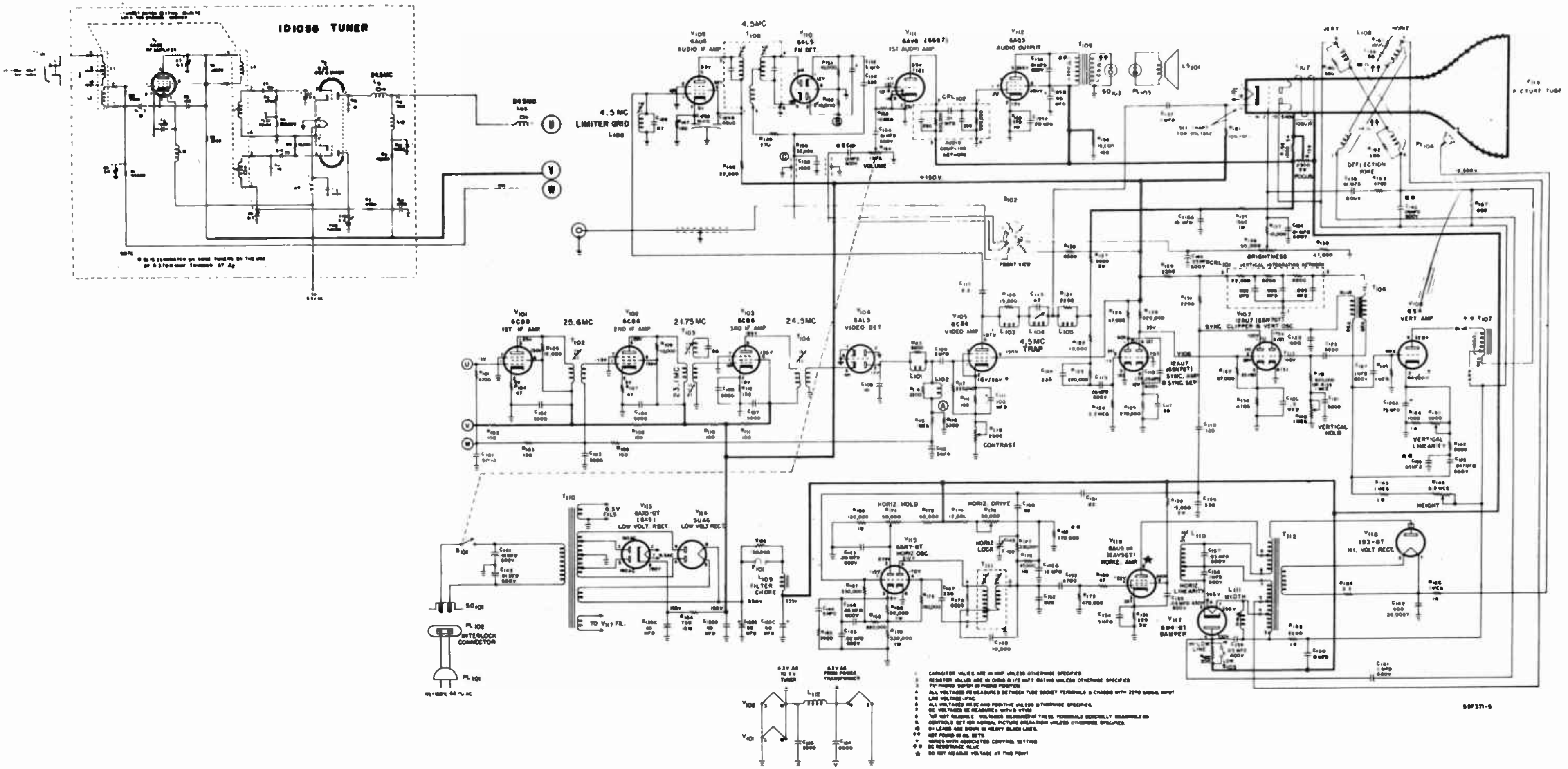

RCA

HOME STUDY
TELEVISION
SERVICING COURSE

PREPARED BY
RCA INSTITUTES, INC.
A SERVICE OF RADIO CORPORATION OF AMERICA

HOME STUDY DEPARTMENT
350 West 4th St., New York 14, N. Y.

UNIT NINE

Lesson 35: Part I — SYNCHRONIZING CIRCUITS
Part II — TROUBLESHOOTING SYNCHRONIZING CIRCUITS
Lesson 36: — DEFLECTION OSCILLATORS
Lesson 37: Part I — DEFLECTION CIRCUITS
Part II — TROUBLESHOOTING DEFLECTION CIRCUITS
Lesson 38: Part I — THE KINESCOPE
Part II — KINESCOPE TROUBLES
Lesson 39: Part I — THE FM SOUND CIRCUITS
Part II — TROUBLESHOOTING THE FM SOUND CIRCUITS

TELEVISION SERVICING COURSE

PREPARED BY

RCA INSTITUTES, INC.

A SERVICE OF RADIO CORPORATION OF AMERICA

HOME STUDY DEPARTMENT

350 West 4th St., New York 14, N. Y.

LESSON THIRTY FIVE

PART I – SYNCHRONIZING CIRCUITS

PART II – TROUBLESHOOTING SYNCHRONIZING CIRCUITS

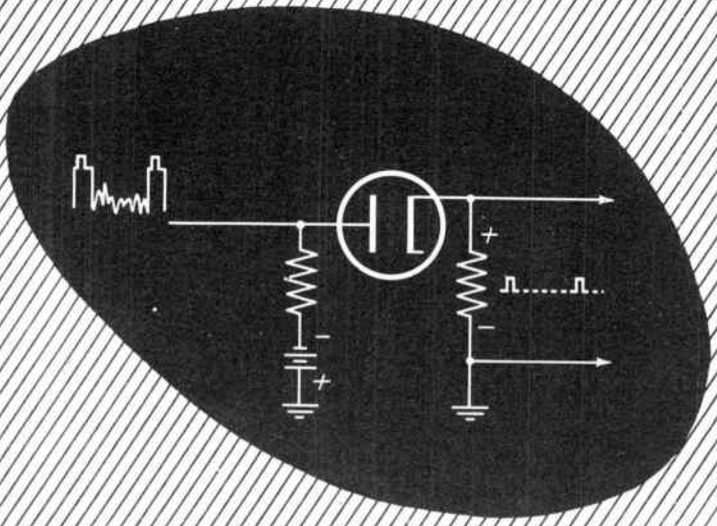

Lesson 35

PART I – SYNCHRONIZING CIRCUITS

NEED FOR SYNCHRONIZING CIRCUITS

35-1. – In addition to the video or picture components, the composite video signal contains the blanking signals to cut off the spot of the picture tube during horizontal and vertical retrace periods and the synchronizing signals to control horizontal and vertical sweep. To see how the sync signals are related to the video signal as a whole, let us refer briefly to the standard representation of the composite signal shown in Fig. 35-1. The synchronizing pulses are the narrow pulses on top of the blanking signal pedestals, extending into the blacker-than-black region.

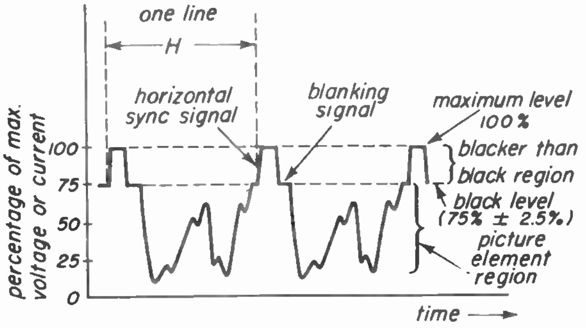

Fig. 35-1

Bursts of static and some other types of interference sometimes appear as sudden increases in signal amplitude in the blacker-than-black region. Since the synchronizing pulses are in this blacker-than-black region, interference pulses or transients could upset the picture synchronization and cause the lines to jitter or the picture to jump. This makes it necessary to have a strong transmitter signal for good television reception. The ratio of signal to noise must be kept as high as possible. In addition, special circuits may be used to clip off or reject noise pulses while accepting the sync signals.

The sync pulses must be separated from the composite video signal before they can be used to control the horizontal and vertical sweep circuits. It is desirable to make this separation at a point where the signal amplitude is of sufficient value so that a minimum of further amplification of the sync pulses is necessary. Both the horizontal and vertical sync pulses are clipped from the composite video signal, amplified, separated from each other by filter circuits, and then applied to control the frequency of the horizontal and vertical sweep oscillators. The essential steps in this process are illustrated here.

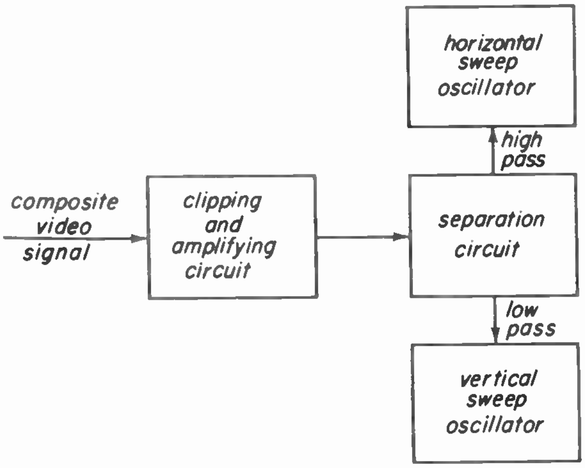

Fig. 35-2

The vertical pulses are not shown in the composite video signal of Fig. 35-1. They occur only at the end of each field or after 262½ lines. Since there are 60 fields per second, the vertical pulses must occur at a repetition rate of 60 per second. The nature of the pulses will be expained later in the lesson.

CLIPPING AND AMPLIFYING SYNC PULSES

35-2. *Clipping Circuits.* – Separation of the synchronizing pulses from the rest of the composite video signal takes place in a clipping circuit which, in effect, slices off the peaks in the blacker-than-black region and passes them along to the synchronizing circuits while rejecting the remainder of the wave. Both the horizontal and vertical sync pulses are clipped and passed along, to be separated by suitable filters.

The clipping action is performed by a clipper stage. All that is required is to bias a tube, almost any type of tube, in such a manner that only the peaks of the composite video signal, the sync pulses, have sufficient voltage amplitude to cause current to flow. A diode could be used for this purpose, but sharp cut-off triodes or pentodes are most frequently used because of the additional amplification they provide.

Clipping Action of a Diode. – Figures 35-3 and 35-4 show two simplified circuits in which a diode could serve to clip the sync pulses from the remainder of the composite video signal. The particular circuit used depends upon whether a positive or negative going video signal is used as the input.

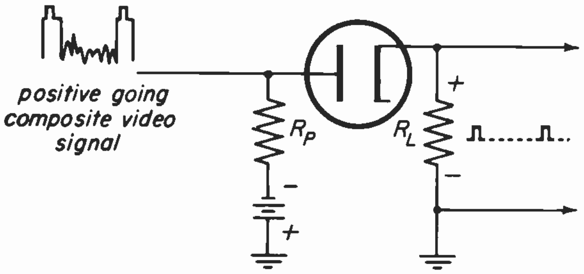

Fig. 35-3

The diode clipper circuit for a positive going input signal is shown in Fig. 35-3. For such a signal, increased signal amplitude means an increased positive voltage. In order to pass only the sync pulses, a negative bias must be applied to the input circuit of the diode clipper. The input voltage is applied to the plate of the diode across resistor R_p and the bias voltage; the output is taken from the load resistor, R_L, in the cathode circuit.

The negative bias voltage is set at a value just above the blanking voltage, so that no current can flow through the diode until the higher positive voltage of a sync pulse causes the plate of the diode to become more positive than the cathode. As the tube conducts briefly for the period of the pulse, a positive pulse develops across the cathode load resistor as the sync output of the clipper.

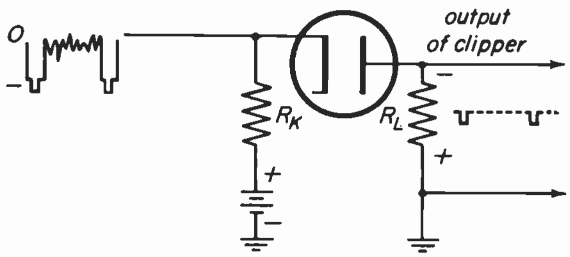

Fig. 35-4

For a negative going input signal, the diode connections are reversed, as shown in Fig. 35-4. In this case the sync pulses of the composite video signal correspond to the negative peaks of the wave. In order to pass only the sync pulses in this case a positive bias must be applied to the input circuit of the diode clipper. The input voltage is applied at the cathode, across R_k and the biasing voltage, while the output is taken from the load resistor R_L in the plate circuit. In this case we set the positive bias voltage at a level just above the blanking level of the composite signal. Then, no current can flow through the diode until the higher negative voltage of a sync pulse causes the cathode to become more negative than the plate of the diode. The tube conducts for the brief period during which the negative voltage of the pulse over-rides the positive bias in the cathode input circuit.

Instead of using a battery to provide bias for the clipper tube, it is much more practical to use a biasing resistor which will operate automatically to adjust the bias voltage in accordance with variations of the peak amplitude of the input signal.

Clipping Action of a Triode or Pentode. – Just as in the case of the diode, by providing a means for obtaining the proper biasing voltage, a triode or pentode can be made to act as a clipper, at the same time amplifying the clipped sync. The clipping action of a triode or pentode is illustrated in Fig. 35-5.

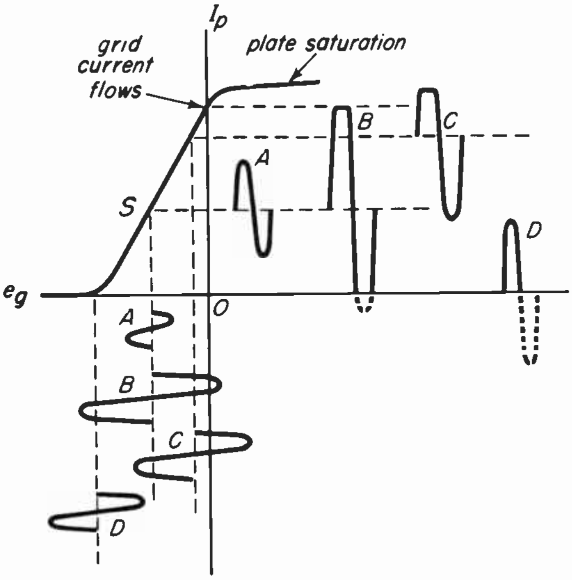

Fig. 35-5

The point at which clipping occurs depends on the amplitude of the input signal and the adjustment of the bias at the grid of the clipper tube. Let us first use a sine wave input to see what happens. If the tube is designed to operate as a normal amplifier, we select grid and plate voltages and circuit components such that the tube will operate on the straight portion of its dynamic characteristic curve at point S in Fig. 35-5. Then sine wave A will appear with the same wave form in the output, except that it has been amplified. If we overload the tube, or operate over a bend in the characteristic curve, we do not get faithful reproduction of the waveform; the output is limited by cutoff of the negative end, and at the positive end by limiting of the grid voltage. Grid current flows, tending to keep the grid from going very positive. Or, if the grid-signal source can drive the grid positive in spite of grid current, there may be plate saturation limiting, when nearly all the electrons reach the plate, and a rise in grid voltage cannot produce any more current. This situation can be brought about more easily by using abnormally low plate voltage. In Fig. 35-5, B shows a wave limited at the upper end by grid current; wave C is limited by plate saturation; D illustrates limiting at the negative end by cutoff.

What does all this about limiting have to do with clipping, which we were interested in? In reality, the two are just about the same; *limiting* rejects extremes, and passes all the signal within the limits; *clipping* passes only that part of the signal which exceeds a certain limit.

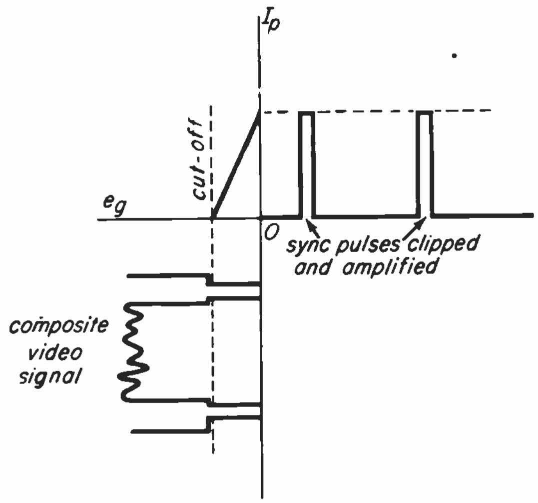

Fig. 35-6

To pass only the sync pulses, clipped from the composite video signal, we operate as in Fig. 35-6. The positive-going signal is applied to the grid circuit of the clipper tube. The sync pulses are the most positive part of the signal. Operating conditions are selected so that only the desired sync pulses are amplified.

A sync clipper circuit is shown in in Fig. 35-7. Notice that a clipper differs from a normal amplifier in the low value of plate voltage and the high values of coupling capacitor and input resistor. These operating conditions result in automatic grid bias and clipping action. Since the tube, which should be of the sharp cutoff type, operates at zero grid bias with no signal applied, any positive voltage applied to the grid will cause grid current, and a negative biasing voltage will be developed by the coupling condenser and the grid resistor. This biasing voltage is proportional to the peak voltage of the input wave. Since the peak voltage is the voltage level of the tips of the sync pulses, the biasing voltage will be proportional to the level of the sync pulses, thus providing automatic grid bias for the clipping action by the tube.

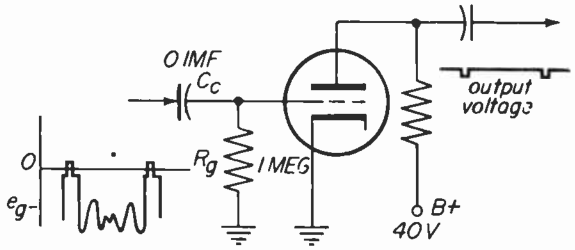

Fig. 35-7

The time constant of the input circuit of coupling capacitor, C_c, and the grid resistor, R_g, is sufficiently long so that the biasing voltage across R_g maintains the circuit at plate current cutoff during the greater part of the input cycle, with the tube conducting only during the most positive parts of the input signal – the sync pulses. The sync pulses, clipped and amplified by the tube, are inverted in polarity, just as in conventional amplifiers.

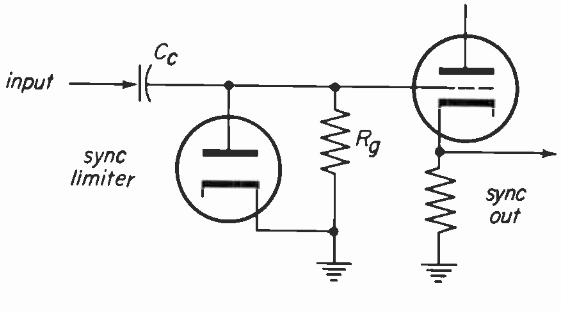

Fig. 35-8

Sync Limiter or Leveler. – The automatic biasing action is improved by connecting a diode across the input circuit, as shown in Fig. 35-8. This is called a sync limiter or leveler, and its action is similar to the d-c restorer used in capacitive coupled video amplifiers. Its operation is the same as a clamper circuit. Basically, its purpose is to provide the grid bias needed so that the sync pulses are all lined up for the clipping action of the triode or pentode clipper tube circuit.

FUNCTION OF THE SYNC PULSES

35-3. – The sync pulses are timing signals which determine the exact moment for the termination of each line and field of the television picture. For the standard of 525 lines to a frame, the horizontal sync pulse frequency is 15,750 per second. This represents a time interval of 63.5 microseconds between pulses; but, the pulse itself occupies only 4½ to 5½ microseconds of this time.

The vertical pulse must determine the time to terminate each scanning field. Since two fields make one frame, each field occupies an interval of 1/60 of a second and the repetition frequency of the vertical pulses must be 60 per second. Since the scanning lines of the two fields in a frame must be interlaced, the exact timing must be set very accurately.

Waveform of the Horizontal Sync Pulse. – Definite standards have been set for the shape of the horizontal sync pulse in the composite video signal. In the F.C.C. standard television waveform, Fig. 35-9, the horizontal sync pulse is an added signal amplitude on top of the blanking signal pedestal. The symbol *H* designates the interval of a single horizontal line; that is from the beginning of one horizontal pulse to the beginning of the next pulse. The active line visible on the kinescope screen occupies 85 per cent of the interval H, while the blanking period takes up the remainder. The hori-

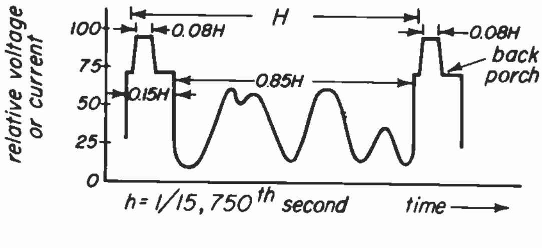

Fig. 35-9

zontal sync pulse takes up approximately one half of the blanking period interval.

The blanking period is longer than the sync pulse. The blanking signal on the kinescope grid must shut off the spot before the horizontal sync pulse operates to start the retrace, and the spot must remain off until it is in the proper position to start the next line. Those intervals are shown as a "front porch" of no less than 0.02H and a "back porch" of about 0.06H. Actually, the retrace of the electron beam is completed in a slightly shorter interval than the blanking time. This tolerance is necessary to allow for minor variations in the operation of the sweep circuits. How long the retrace takes depends on the receiver's scanning circuits.

Waveform of the Vertical Sync Pulses. – The vertical sync signal must initiate the retrace of the electron beam from the bottom of one picture field to the top of the next. The two fields are interlaced. The spot must be blanked out during an interval somewhat longer than the retrace period, to allow for exact positioning. At the same time it is essential that the horizontal sweep remain synchronized. To meet all these requirements we need the vertical synchronizing signal waveform shown in Fig. 35-10.

First of all, the blanking period is equal to approximately 20 horizontal lines with some leeway at the transmitter, and with the receiver responding accordingly. During this blanking period of, let's say, 20 horizontal lines, horizontal sync pulses must continue. The portion of the complex waveform which is the vertical sync pulse occupies an interval equal to 3 horizontal lines. In order not to interrupt the horizontal sync signals which would normally be present during this period, the vertical sync pulse is "chopped" or serrated; that is, it is broken up into six pulses with sharp dips occurring at twice the frequency of the horizontal sync pulse. Exact positioning of the vertical pulse is provided by means of groups of equalizing pulses at twice the horizontal frequency placed immediately ahead of and following the six serrated sections of the vertical pulse.

We do not see all of the 525 lines of a picture frame. Since the blanking period between fields occupies an interval of about 20 lines, the lines produced while the beam retraces from the bottom to the top of the screen are blanked out. The retrace path is a zig-zag line not visible in the picture. By turning up the brightness control of a receiver this retrace path can be seen. The visible lines in

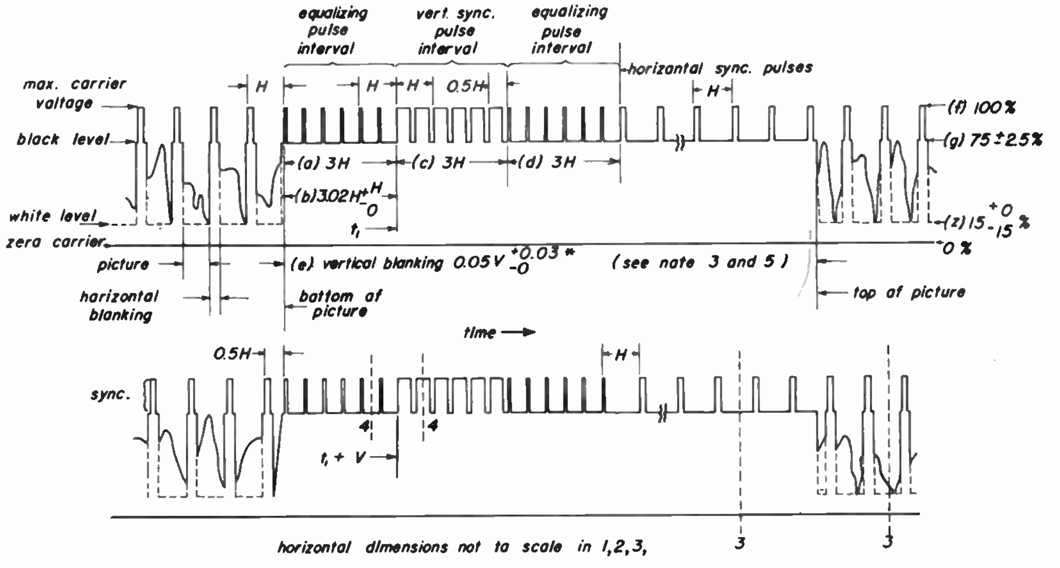

Fig. 35-10

each field in the normal raster would be 262½ - 20 = 242½; and in the complete frame 525 - 40 = 485 lines.

The alternate blanking intervals shown in Fig. 35-10 for the first and second fields of a picture frame do not contain identical signals. The half-line difference in the portion of the sync pulses in even and odd fields provides interlacing of the two fields.

Separation of Horizontal and Vertical Sync Pulses. – The clipping circuit described earlier gives an output containing all the signals necessary for properly synchronizing the horizontal and vertical sweeps with the transmitted signal. In order to make use of these, there must be some provision to select the horizontal sync pulses and deliver them to the receiver's circuits. This is done by means of RC filter circuits, which are capable of passing only the desired pulses. The horizontal synchronizing pulses are separated from the total sync voltage and coupled to the horizontal deflection circuits to control the timing of the horizontal scanning; the vertical synchronizing pulses are separated from the total sync voltage and coupled to the vertical deflection oscillator to synchronize the vertical scanning.

We have seen that the horizontal and vertical sync pulses differ both in repetition rate and in waveform. The horizontal sync pulses are short sharp bursts of amplitude, rising to full value as fast as possible, remaining there for a specified time, and then returning to zero. If the interval between horizontal sweeps is called H (equal to 1/15,750 sec.), then the time specified for the duration of the pulse is $0.08H$. This means that the signal is zero most of the time, and is on for only 8% of the time.

At the end of each field, the extra "equalizing pulses" are inserted, for reasons to be described later, thus doubling the pulse frequency. These pulses have one-half the width of the horizontal pulses. After six pulses in the equalizing interval, the vertical pulse appears. As can be seen in Fig. 35-10, this is not a pulse which appears added to the ones already there, but is really a change in the character of the pulses. Instead of the pulse being on for 8% of the time and off 92% of the time, the reverse becomes true; the pulse is lengthened to fill 92%, with an off period of only 8%. This continues for six pulses (equal to three horizontal sweeps) followed by another six-pulse equalizing interval; then the equalizing pulses are omitted, and normal horizontal pulses continue.

With the description of both synchronizing signals before us, it is necessary only to compare the two, finding the identifying characteristics, and see what sort of circuits can be used to tell one from the other. Since the horizontal scanning continues without interruption through the vertical retrace, we look for some continuing feature. We find that the vertical rise at the start of each pulse is the one thing that continues strictly in form and in proper time (the extra ones won't hurt this argument). For this we need some circuit which is responsive to sudden rises, but not – since it must work through the vertical sync interval – to the length of the pulse. A study also shows that the circuit which handles the vertical sync must be responsive to pulse length, but not to sudden changes such as occur before, during, and after the vertical sync signal.

Differentiating and Integrating Circuits. – A differentiating circuit is one which passes along sudden changes but which returns the output to a normal steady value, no matter how long the new input remains applied. See Fig. 35-11(a). It is the same thing as a high-pass filter in sine-wave and audio applications. An integrating circuit builds up its output voltage when a signal is applied, and allows it to leak off with the input drops; momentary jumps in the input, therefore, have little effect on the output, if they are short enough. Fig. 35-11(b) shows this circuit; it is the same thing as a low-pass filter. "Integrating" in this case means averaging the energy in the pulses.

With pulses of long duration and short

spaces, the output goes up; with short pulses and long spaces, the output falls to zero, as will be explained in greater detail later. Both circuits are simply a series resistor-capacitor filter, and differ as far as circuit arrangement is concerned only in where the output is taken.

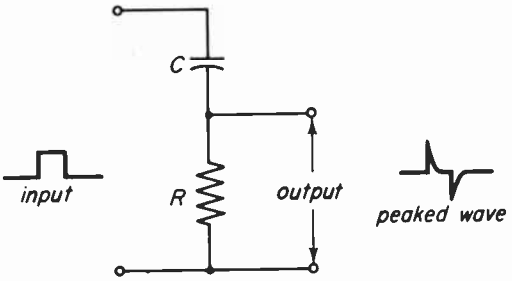

(a) differentiating circuit

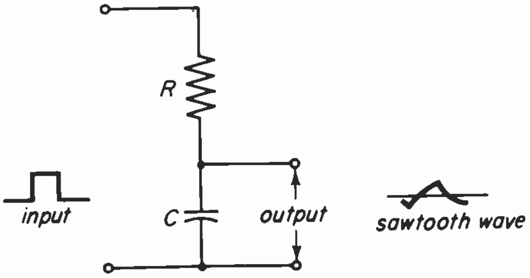

(b) integrating circuit

Fig. 35-11

As the leading edge of a pulse is applied to an RC circuit (either one in Fig. 35-11), the sudden rise in voltage causes a maximum flow of current through the resistor as the capacitor begins to charge followed by an exponential drop in current as the capacitor charges. The output voltage across the resistor would then be a peaked wave, while the output from across the capacitor would be a gradual voltage rise corresponding to the charging capacitor voltage. The exact shape of these output waveforms will depend upon the time constants of the RC combinations – a sharp peaked wave across the resistor and a sharp rise in voltage across the capacitor for a short time constant, and a broader peak across the resistor with a slower voltage rise across the capacitor for a longer time constant. The differentiating circuit has a short time constant, and the output is taken across the resistor; the integrating circuit has a long time constant, and the output is taken across the condenser.

During the flat portion of the pulse the input voltage remains substantially constant. Where the RC combination has a short time constant, the capacitor may become fully charged before the completion of the pulse; in which case the voltage across the resistor would drop to zero, while across the capacitor the voltage would reach a maximum and remain at that value for the remaining period of the pulse. For a longer time constant the capacitor does not become fully charged. At the completion of the pulse the sudden drop in voltage, represented by the trailing edge, permits the capacitor to discharge. This results in a sudden current through the resistor in the opposite direction, followed again by an exponential drop in voltage as the capacitor discharges. This means in effect that in circuit (a), a sharper-peaked output is approached as the time constant becomes shorter in relation to pulse length; for circuit (b) as the time constant becomes longer, the effect of the individual pulses becomes less and less. Now it can be seen that the output of a differentiating circuit is the result of rate of change in the input signal, with little regard to average input; the output of an integrating circuit depends on *average* input, with little regard to sudden or short-time changes.

Sync Separation Circuits. – Substantially complete separation of the horizontal and vertical sync signals can be obtained by using combinations of differentiating and integrating circuits together with amplifier tubes, as shown in Fig. 35-12. The combined input signal is applied at A, so that both the horizontal and vertical pulses are available at the input to the combination of high-pass (differentiating) and low-pass (integrating) filters. The horizontal sync pulses are readily accepted by the former, but are rejected by the latter while the vertical sync signals are accepted by the latter only. The networks in the plate circuit of the tubes give additional shaping of the pulses.

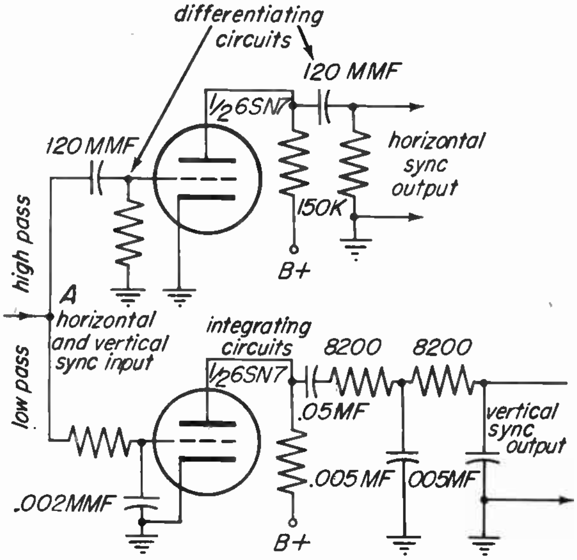

Fig. 35-12

Since an amplifier, even when used as a clipper tube, will invert the polarity of the signal, the total number of additional amplifier stages through which the signal passes will determine whether the final sync signal is positive or negative. This is illustrated in Fig. 35-13.

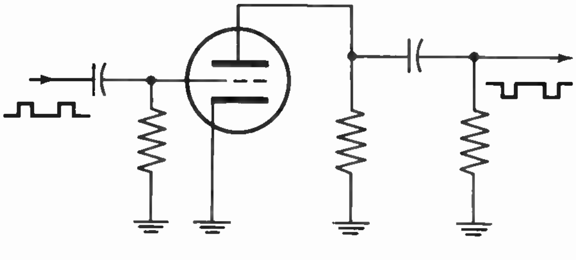

Fig. 35-13

When the equalizing pulses and the vertical sync pulses are applied to the differentiating circuits the action is somewhat more complex, as indicated in Fig. 35-14. The frequency of these pulses is twice that of the horizontal sync pulses, and twice as many positive and negative peaks are formed by the action of the differentiating circuit. Only the leading edges are used. The double frequency is made necessary by the interlace system of scanning and the half-line shift for the beginning of each successive field, as indicated in Fig. 35-14.

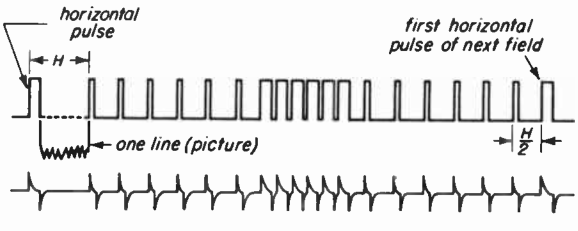

(a) field ends at the end of a line

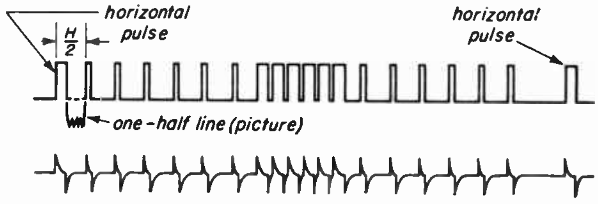

(b) field ends in the middle of a line

Fig. 35-14

When a field ends at the end of a line the first equalizing pulse starts at the position which corresponds to the normal horizontal pulse; that is, distance H from the beginning of the previous pulse. This equalizing pulse, therefore, furnishes a peak for the horizontal sweep circuit, as do all the alternate peaks formed by the leading edges of equalizing pulses and the serrated vertical pulses. These are indicated in Fig. 35-14*a*.

The next field, however, ends in the middle of a line. In this case the first equalizing pulse is positioned at a distance only ½H from the beginning of the last horizontal sync pulse of the field. But this equalizing pulse does not produce a triggering peak; it is the second equalizing pulse at an additional distance ½H which is now in the right position for the triggering signal. At the end of the vertical sync signal there is a distance of one line, H, between the last equalizing pulse and the following horizontal sync pulse.

Thus for each succeeding field the entire series of equalizing pulses and serrated vertical pulses as a unit is shifted back and forth a distance of one-half line to obtain the proper positioning for interlacing the two fields of the frame, while the synchronizing signals for the horizontal sweep oscillator are provided without interruption. The purpose of the equalizing pulses is to provide uniform conditions surrounding the vertical sync pulse. In each case, the equalizing pulses not used for horizontal sweep triggering are ignored by the sweep circuit, since the trigger functions only when the sweep is nearly ready to start by itself.

Operation of the Integrating Circuits. – Figure 35-15 illustrates the operation of the low-pass integrating circuit when horizontal and vertical sync pulses are applied to it. The circuit has a long time constant, so that the capacitor charges and discharges slowly. When the leading edge of a horizontal sync pulse is applied to the circuit, the capacitor starts to charge and continues to charge for the duration of the pulse. But, the horizontal sync pulse is very short, only 4½ to 5½ microseconds, so that only a very small voltage is built up on the capacitor in that time. Then, as the following edge of the pulse is reached and the applied voltage is suddenly removed, the small voltage that has developed across the capacitor drops to zero. A small ripple of voltage of very low amplitude has resulted. The same action is true for the equalizing pulses; but, since the duration of these pulses is shorter than for the horizontal sync pulses, the resulting ripple is even less noticeable.

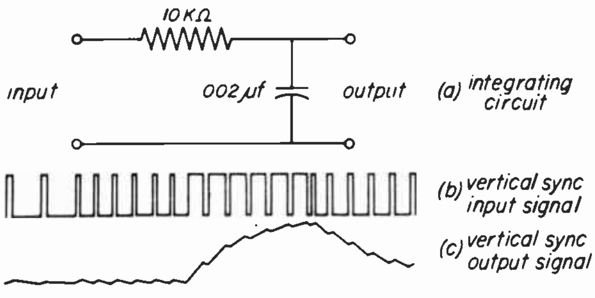

Fig. 35-15

When we reach the vertical synchronizing pulse, the situation is different. Although there are six sections, we must note that the period of each pulse is very much longer than the extremely short gaps. As the first of the six sections of the vertical sync pulse is applied to the integrating circuit, the capacitor starts to charge and continues to charge during the period of the pulse. During the very brief interval when the applied voltage is removed, the capacitor can discharge only a very small amount before it starts to charge up further due to the voltage applied by the second section of the vertical pulse. This action is cumulative for the six sections of the pulse, with voltage across the capacitor rising to a maximum in a series of sawtooth steps. The presence of the equalizing pulses both before and after the serrated vertical pulse insures that, despite the half-line shift at each field to provide for interlacing, the conditions for charging the integrating circuit capacitor are equalized for each field and the same waveform and maximum voltage is reached for each vertical sync output triggering signal.

CIRCUIT ANALYSIS OF TYPICAL SYNCHRONIZING CIRCUITS

35-4. – Now that we have seen how the various stages in a synchronizing circuit operate, let's put them together and trace the signal through the entire synchronizing section of a receiver. We will examine basic types of synchronizing circuits used in typical receivers.

Common Channel for Horizontal and Vertical Sync. – Referring to Fig. 35-16, the signal for the sync circuits is obtained from the plate of the d-c restorer. The waveforms for the horizontal and vertical sync pulses show a negative polarity, with a voltage of 9 volts peak-to-peak, as shown in Fig. 35-17*a* and *b*.

Notice that most of the video information has been cut off by the action of the d-c restorer. The signal from the d-c restorer is applied to the grid of the first sync amplifier (6SK7 – V118) where it is

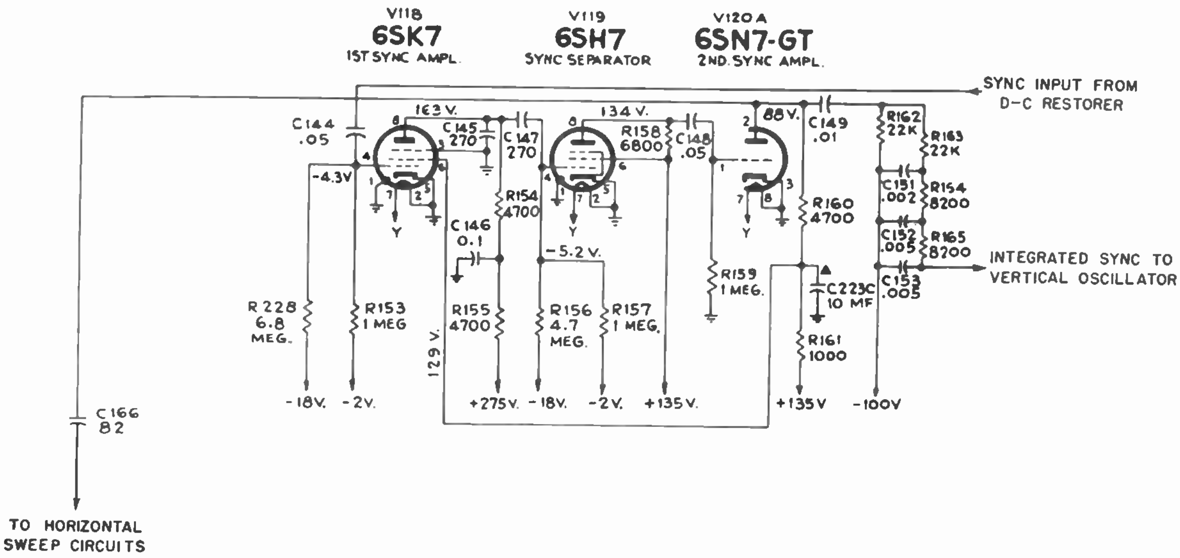

Fig. 35-16

amplified to give a positive polarity signal at the plate (pin 8). This is shown in Fig. 35-17*c* and *d*.

The output of the first sync amplifier, V118, is capacitively coupled to the next stage, the sync separator V119,

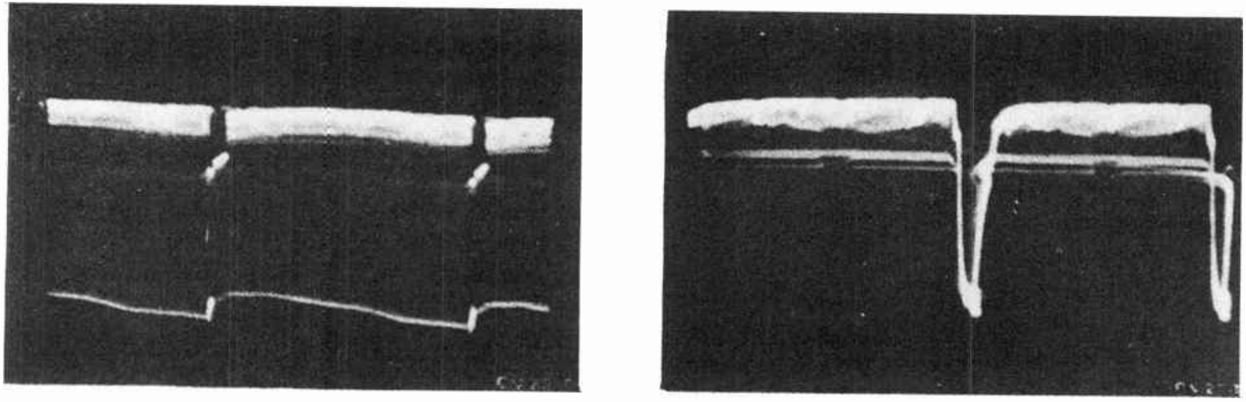

(a) Vertical (9 volts peak to peak)

(b) Horizontal (9 volts peak to peak)

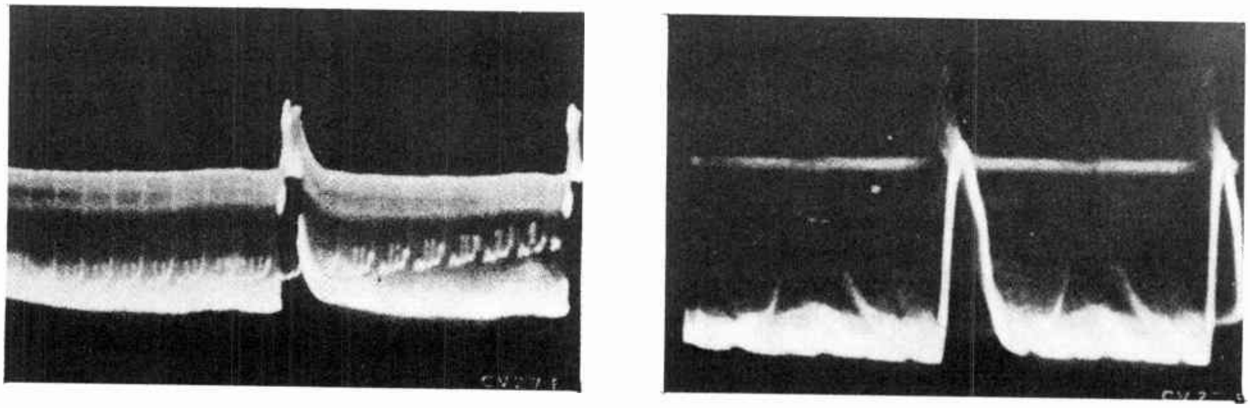

(c) Vertical (58 volts peak to peak)

(d) Horizontal (40 volts peak to peak)

Fig. 35-17

through the 270 mmf capacitor, C147. The sync separator tube separates sync from video, not one type of sync from the other. The time constant of C147 with the grid resistance is such that an automatic grid bias is developed in addition to the normal −5.2 volts fixed bias. V119, therefore, serves as a clipper, slicing off the sync pulses to give the waveforms shown below:

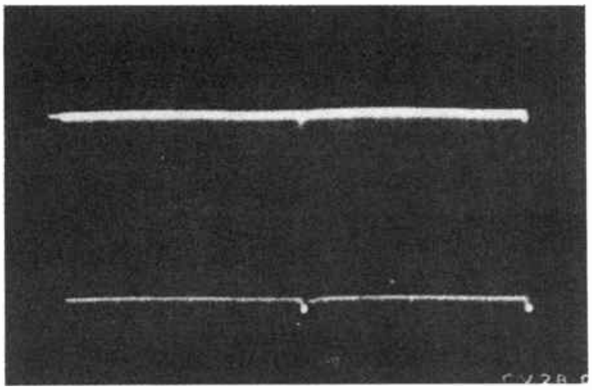
(a) Vertical (75 volts peak to peak)

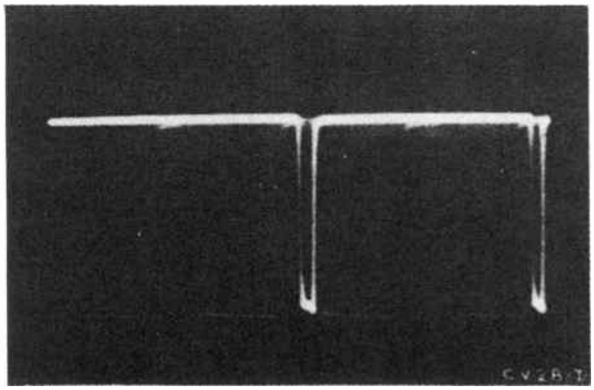
(b) Horizontal (75 volts peak to peak)

Fig. 35-18

The signal is then applied to the second sync amplifier (6SN7, V120-A), to give the output shown in Fig. 35-19, which is coupled by C148 to the second sync amplifier.

In summary, the first sync amplifier amplifies the negative sync signal from the d-c restorer. Noise impulses of greater amplitude than the sync will drive the grid voltage beyond cut-off, so that there is a compression of whatever noise is present in the sync signal. The next stage, the sync separator, is designed to operate in such a manner that the negative portion of the applied signal, which is the video information still present in the signal, is beyond the grid cut-off point. All video information is thus eliminated. The grid leak bias on the sync separator acts to hold the level of the sync pulses constant. The operating characteristics of the second sync amplifier are such that the negative sync signal applied at the grid drives the tube beyond cut-off, to clip the amplitude of the sync pulses (cutting off the tips) and provides a constant voltage output of the sync pulses. Thus these circuits fulfill the necessary requirements that the sync signal be completely separated from the video and the level of sync pulses to be applied to the deflection circuits be constant in amplitude.

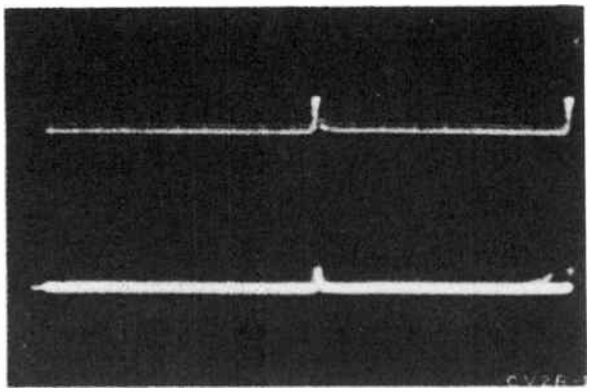
(a) Vertical (35 volts peak to peak)

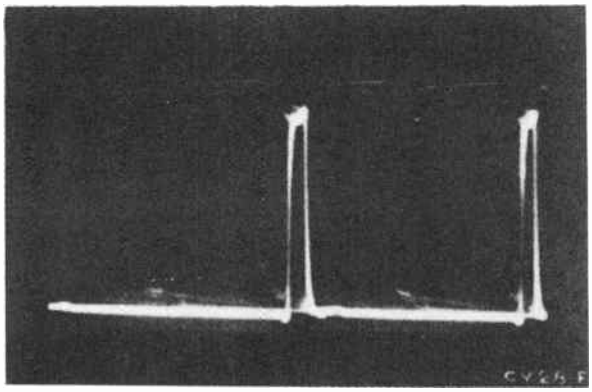
(b) Horizontal (29 volts peak to peak)

Fig. 35-19

The output of the second sync amplifier is fed to the integrating and differentiating circuits where the vertical and horizontal sync pulses are separated from each other. With R160 (4700 ohms) serving as the load resistor for the second sync amplifier, two output paths are provided. The higher frequency horizontal sync pulses pass readily through the small coupling capacitor C166 (82 mmf) to the horizontal sync discriminator, not shown in Fig. 35-16, while the much larger capacitor C149 (.01mf) will pass both the horizontal and vertical sync pulses to the integrating circuit for the vertical oscillator (6J5 – V121).

The input to the integrating network at the junction of C149, R162 and R163 shows these waveforms for the vertical and horizontal pulses:

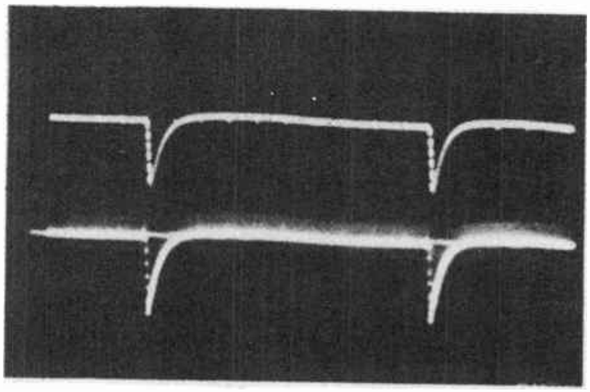

(a) Vertical (45 volts peak to peak)

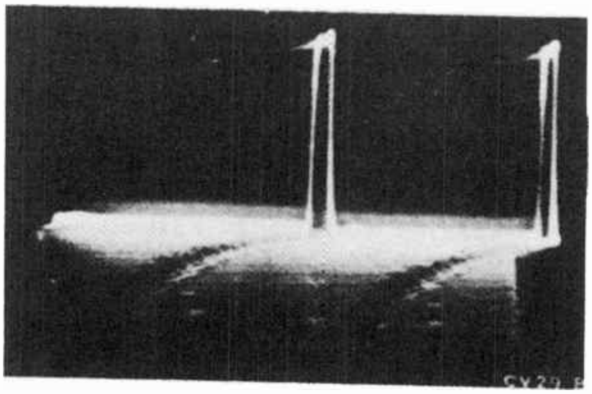

(b) Horizontal (30 volts peak to peak)

Fig. 35-20

The output of the integrating network at the junction of R165 and C153 shows an integrated vertical sync pulse which looks like the waveform of Fig. 35-21*a*. This pulse, when applied to the grid of the blocking oscillator, synchronizes the triggering of the blocking oscillator to give the waveform at the grid of the 6J5 (V121, pin 5) as shown in Fig. 35-21*b*.

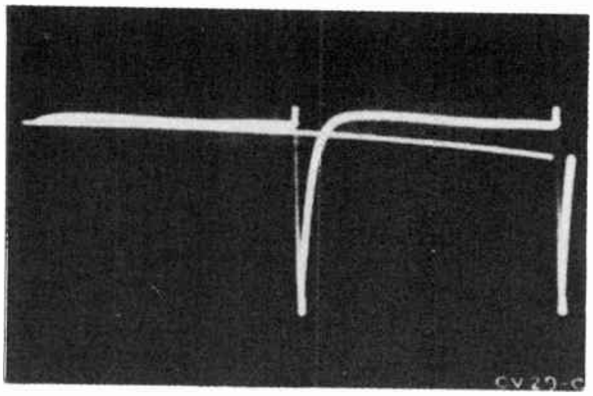

(a) Vertical (32 volts peak to peak)

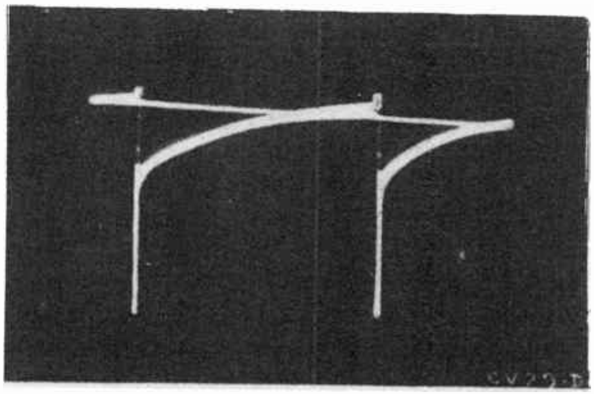

(b) Horizontal (350 volts peak to peak)

Fig. 35-21

Circuit with Sync Limiter Diode. – In the circuit shown in Fig. 35-22 the sync signals are taken from the output of the first video amplifier. This makes the sync signal input independent of the setting of the contrast control, which is in the second video amplifier. The signal is fed to both halves of the 6SN7-GT (V108), labeled AGC rectifier and first sync separator.

The video is separated from the sync pulses to give the waveforms shown in Fig. 35-23. Resistor R141 (5600 ohms) isolates the input capacity of the sync circuit, which would otherwise cause a loss of high video frequencies in the video amplifier.

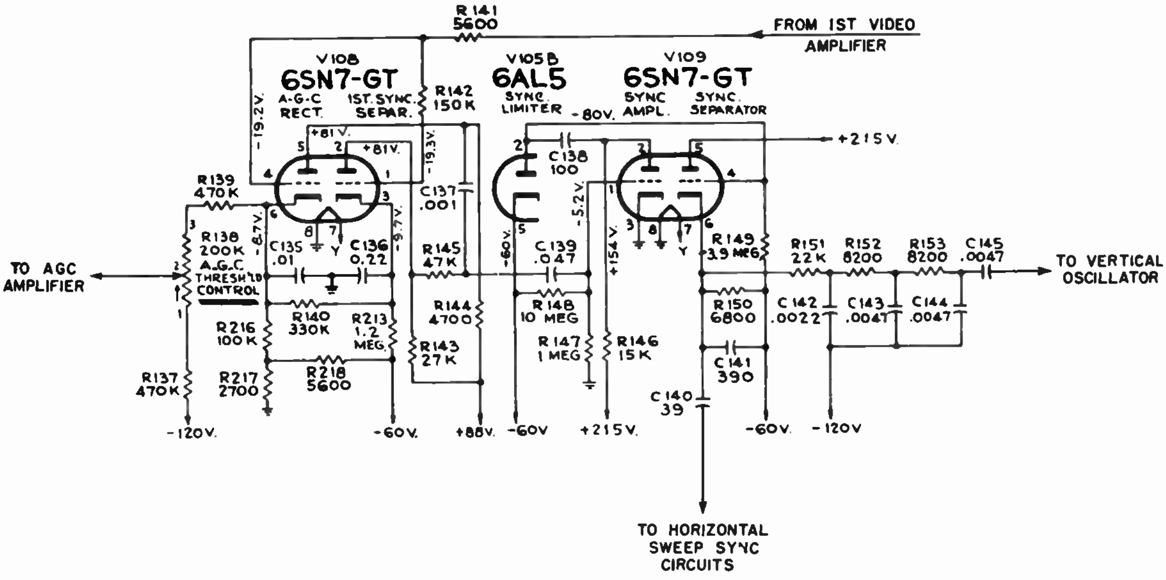

Fig. 35-22

The first half of the 6SN7-GT (V108) labeled AGC rectifier performs a double function. It provides a control voltage, determined by the amplitude of the sync tips, for the AGC amplifier. It also serves to separate the horizontal sync pulses from the video. The composite video signal is also applied to the second half of V108, labelled First Sync Separator, through the additional isolating resistor R142 (150K). The time constant of C136 (0.22 mf) and R140 (330K) in the cathode circuit of this stage operates to keep the tube cut off for a period approaching that of the vertical sync pulse. The video is removed and the sync pulses are in the output, as shown in Fig. 35-23*a* and *b*.

The grid-to-cathode bias applied to the first section of V108, labelled AGC rectifier, is derived from two sources. The voltage from grid to ground is obtained from a voltage divider network common to the plate circuit of the first video amplifier. The voltage from cathode to ground results from the voltage divider network comprising resistors R137 (470 K), R138 (200 K), R139 (470 K), R216 (100K) and R217 (2700), with R137 tapping the -120 volt point of the power supply and R217 grounded. The cathode has a normal voltage of -8.7 volts to ground. With the voltage from grid to ground at -19.3 volts, the grid to cathode normal bias is -10.6 volts. With the plate voltage to ground measured at +81 volts or the equivalent voltage of + 72.3 volts from plate to cathode, the tube is normally cut off.

The tube conducts only during the time when the pulses are applied, with the video information effectively below the cutoff level. The sync pulses appear in the output, the plate of the AGC rectifier, as in Fig. 35-23*c* and *d*. During the period that the tube conducts, the current from cathode to ground through resistors R216 and R217 results in a voltage proportional to the level of the sync voltage in the input signal. This charges capacitor C135 (.01 mfd) to give a filtered voltage that can be tapped off to provide a voltage source for AGC. The time constant of the resistance and capacitance in the cathode circuit is such that the circuit responds best for the horizontal sync rate, since the by-pass action of the capacitor results in no degeneration at the horizontal sync frequency but appreciable degeneration at the vertical sync frequency.

The AGC rectifier, in addition to its AGC function passes the horizontal sync pulses with the vertical sync attenuated. The first sync separator passes the ver-

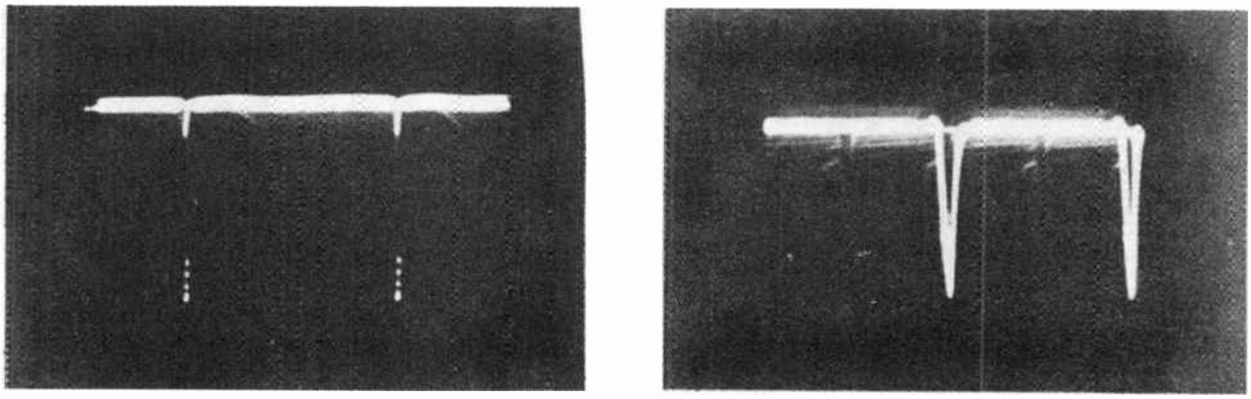

(a) Vertical (26 volts peak to peak)

(b) Horizontal (25.5 volts peak to peak)

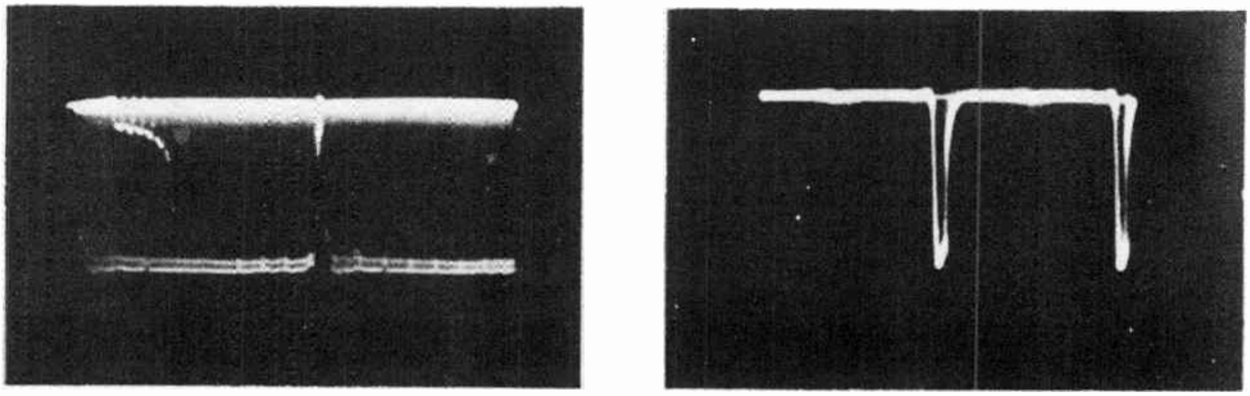

(c) Vertical (24 volts peak to peak)

(d) Horizontal (24 volts peak to peak)

Fig. 35-23

tical sync with some attenuated horizontal sync. In both cases video information is effectively removed. The two outputs are then combined at the grid of the sync amplifier stage.

The combined signal from both halves of V108 are amplified in the sync amplifier section of 6SN7-GT (V109), clamped by diode limiter (6AL5-V105B) and then applied to the second sync separator section of V109, with the output of that stage taken from the cathode. The sequence of sync amplifier, limiter and sync separator stages is shown in the simplified diagram of Fig. 35-24.

Sync pulses with the tips going negative are present on the grid of V109A. The tube is biased in such a manner that the

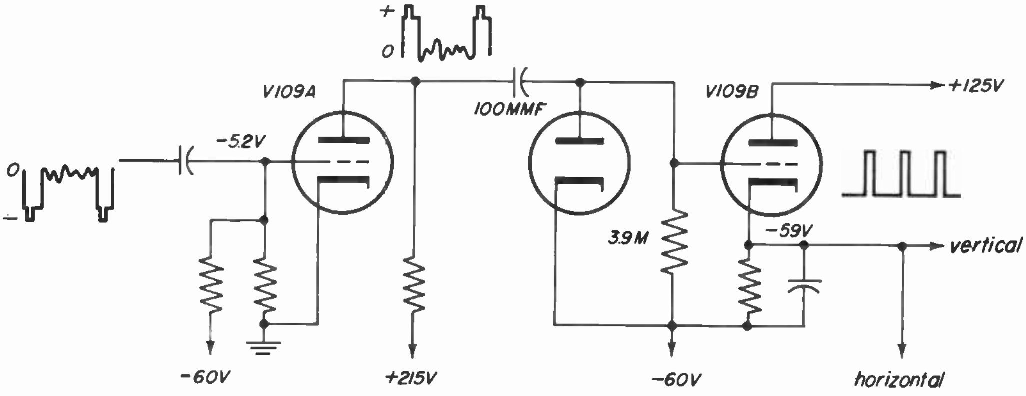

Fig. 35-24

tips of the sync pulses are cut off as shown below, since they have sufficient amplitude to drive the grid voltage below cutoff.

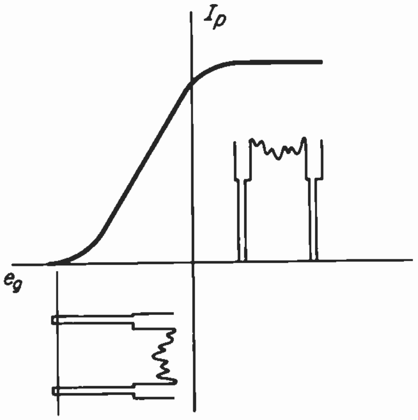

Fig. 35-25

This action cleans up the tips of the sync pulses and limits any noise amplitude present in the signal. Since the action of the tube inverts the polarity of the applied signal, the output is a positive-going signal. This is coupled to the grid of the sync separator, V109B, through the 100 mmf coupling capacitor.

The diode limiter, V105B, acts in the same manner as a d-c restorer to line up the tips of the sync pulses by establishing a definite grid bias or reference level for the grid of V109B. When the grid of V109B is driven positive, the diode provides a path for charging the grid condenser, without going through the cathode resistance of V109B.

In order to provide isolation between the video and sync circuits and to obtain the proper polarity of sync pulses (positive-going) to be sent on to synchronize the deflection generators, the sync separator, V109B, is operated as a cathode follower stage; the output is taken from the 6800-ohm cathode resistor R150.

The schematic in Fig. 35-22 indicates that the limiter diode V105B has –80 volts on the plate, and –60 volts on the cathode, with no signal input. Since there is no applied d-c bias, this difference must be the result of a rectified signal. That this is so can be shown by removing the converter tube, and noting that the difference disappears. Because there is no applied signal, there must be noise in the r-f amplifier and converter tubes, which is rectified to give the 20-volt difference.

From the cathode-follower output of the sync separator, the vertical sync pulses and the horizontal sync pulses are separated so that they can be used to time their respective sweep circuits. The vertical sync pulses are integrated and appear at the output of the integrating network at the junction of C144, C145, and R153. This triggers the vertical sweep oscillator.

Separate Horizontal and Vertical Sync Channels. – As shown in Fig. 35-26, in this circuit the horizontal and vertical sync pulses are amplified in separate stages. The use of separate circuits results in better control of noise and other interference, so that more stable sync signals are delivered to the vertical and horizontal oscillators.

The signal source for sync-circuits is the output of the video amplifiers which provides positive sync. Video signal is coupled to both triode sections of the 6SN7GT (V113) labelled sync separator. Here the vertical and horizontal sync pulses are separated from the video information. The output of one triode section goes to the vertical sync amplifier V114A, which supplies integrated sync voltage for the vertical sweep oscillator. The grid of V114A returns to +140 volts in order to limit the negative sync pulses in the input. The other triode section of V113 supplies sync to the horizontal sync amplifier V112. The cathode voltage of V113 is connected to the AGC amplifier to serve as the AGC control voltage. Two stages are used for the horizontal sync amplifier, with the horizontal sync output across the cathode resistor R180 coupled to the horizontal control tube.

PART II – TROUBLESHOOTING SYNCHRONIZING CIRCUITS

The purpose of the sync pulses is to lock in the frequency of the horizontal and vertical deflection oscillators so that the picture information can be reproduced in its correct position on the raster. If the

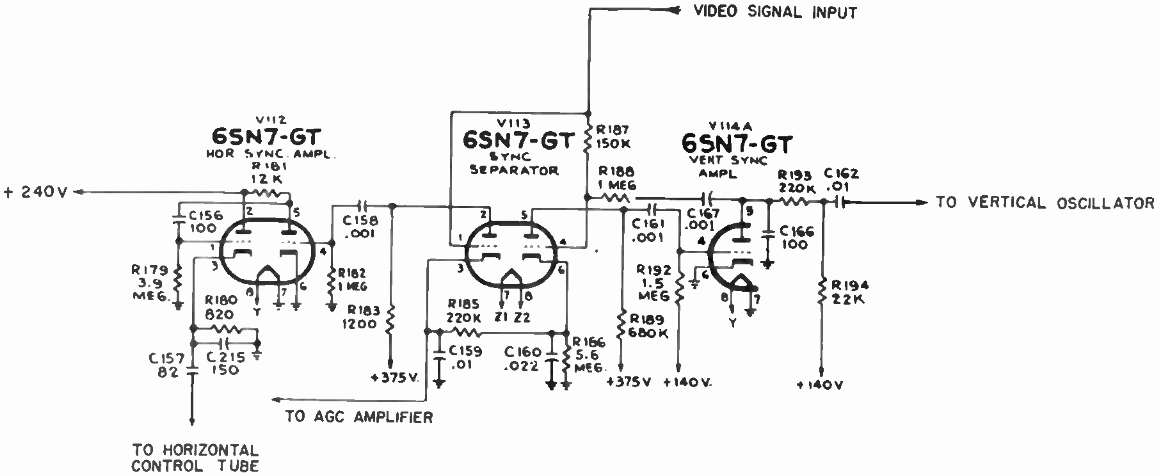

Fig. 35-26

picture does not hold together, locked in frame, this indicates trouble with the synchronization. Troubles which may be encountered with picture synchronization are mainly as follows:

1. *Complete Loss of Horizontal and Vertical Sync.* This will cause continuous movement of the picture both horizontally and vertically, because it allows the deflection oscillators to oscillate at their free-running frequency. When there are points in the circuit where the horizontal and vertical sync are acted upon separately, the trouble may be either no horizontal sync or just no vertical sync.

2. *Complete Loss of Horizontal Sync.* This will cause continuous movement of the picture horizontally. When the free running frequency of the horizontal oscillator is not at 15,750 cps the picture tears apart in diagonal bars.

3. *Complete Loss of Vertical Sync.* This will cause continuous rolling of the picture vertically.

4. *Weak or Poor Sync.* This will make the setting of the hold control critical. Both horizontal and vertical sync may be simultaneously weak, or only one of them may be affected. Weak horizontal sync may also cause the picture to bend; weak vertical sync may cause the picture to drift vertically or jump out of interlace. Troubles of this kind may be due to insufficient sync pulse amplitude, insufficient video signal or hum in the sync.

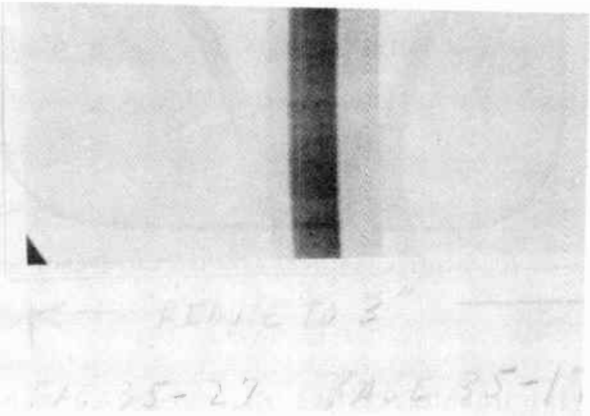

Fig. 35-27

DISTINGUISHING BETWEEN SYNC AND FREQUENCY TROUBLES

35-5. – The first step in troubleshooting a sync trouble is to determine whether there is no synchronization or whether the deflection oscillator is off frequency. This may be immediately obvious from the kinescope presentation, as when the complete picture frame is visible, but it is moving, as illustrated in Fig. 35-27. Sometimes the loss of sync may change the frequency of the oscillator, so that the picture on the kinescope may look like Fig. 35-28 *a*, in the case of horizon-

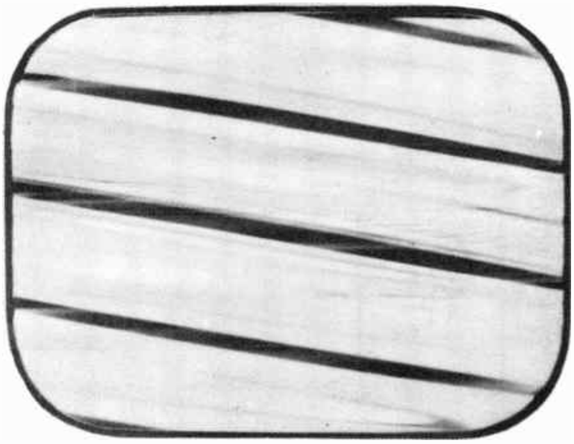

(a) Incorrect horizontal oscillator frequency

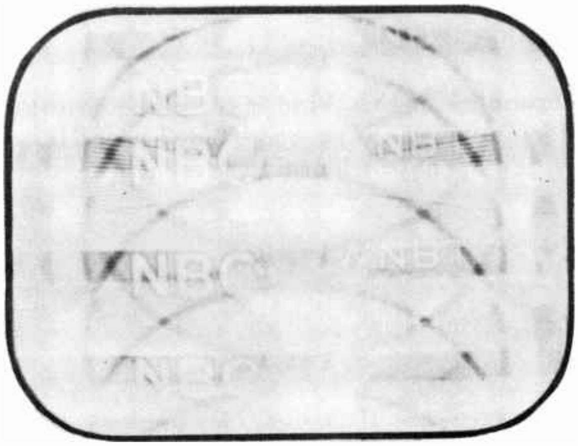

(b) Incorrect vertical oscillator frequency

Fig. 35-28

tal trouble, or like Fig. 35-28 *b*, in the case of vertical trouble. Such a picture may also be seen on the kinescope when the deflection oscillator itself is off frequency. To distinguish between these two possibilities the effect of the hold control should be noted:

(1) If the trouble is due to no sync, it will be possible to frame the picture correctly, so that one complete picture is seen as in Fig. 35-27, but it will not stay still. It will "slide" over the screen, from side to side, or up and down, or both, depending on the sync trouble.

(2) If the trouble is due to the deflection oscillator being off frequency, then the picture will hold in place when the oscillator is readjusted to show one complete picture. If considerable adjustment of the frequency control is required to do this, or it cannot be done at all with the frequency control, trouble in the oscillator frequency determining circuit is indicated.

DISTINGUISHING BETWEEN SYNC AND AFC TROUBLES

35-6. – In receivers where the horizontal deflection oscillator is controlled by an AFC circuit, when there is no horizontal hold localization must also be made between trouble in the AFC circuit and lack of sync pulses. If the picture can be framed horizontally, but will not stay still horizontally, the trouble can be due to no sync reaching the AFC circuit or to an inoperative AFC itself. The interaction between these two is illustrated in Fig. 35-29.

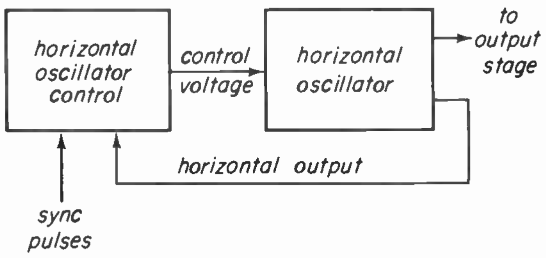

Fig. 35-29

Unless there are separate stages in the receiver for horizontal and vertical sync, it can usually be assumed that horizontal sync is present when vertical sync is present. In such a receiver lack of horizontal hold with good vertical hold is almost always in the AFC circuit. When there are separate sync stages the trouble is likely to be in the sync circuit. To aid in localizing trouble to the sync or AFC circuit, some methods of checking the operation of AFC circuits are described now.

The AFC circuit itself can cause two types of trouble. It can fail in such a way as to change the frequency of the oscillator considerably, but when the frequency is readjusted with the circuit controls the picture will be locked horizontally. This shows a frequency trouble caused by the AFC, since the picture can be made to stay still. The AFC circuit can also fail in such a way that it can no longer hold the frequency of the deflection oscillator constant at the horizontal rate. The frequency itself may change, but when it is readjusted to the horizontal rate it will not stay constant, causing the picture to drift horizontally. A method of localizing this trouble to either lack of sync or to an AFC defect will now be described.

There are two types of AFC circuits in general use. One is the synchroguide type of circuit, whose operation is based on control of the bias on a blocking oscillator by regulating the current through the control tube. The other type of AFC circuit is the synchrolock type, where the tuned circuit of an oscillator is controlled by regulating the bias on a reactance control tube.

In either type of AFC we can check the operation by seeing if an artificial change in the control circuit will cause a frequency change in the oscillator. This is the function of the control tube. It should be remembered that the checks to be described are made when a no-horizontal-hold trouble is encountered, and the picture is drifting back and forth on the screen. The change, if any on the rate of drift is the basis of the test.

Checking the Synchroguide Circuit. – To check the operation of a synchroguide type of AFC circuit, vary the *horizontal hold control.* If the control circuit is functioning, the horizontal hold will be able to affect the amount and direction of the picture drift. It will be possible to momentarily hold the picture in place with the hold control. This is because varying the hold control changes the current through the control tube which changes the bias on the blocking oscillator, and in turn changes its frequency. If the hold control has this effect, the control circuit is functioning and the no-horizontal hold trouble is due to no sync.

Checking the Synchrolock Circuit. – In a synchrolock type of circuit, both chassis controls – the hold control and the frequency control – are in the oscillator circuit. They will therefore provide no information as to the functioning of the control circuit. The check in this circuit is made by removing the horizontal oscillator control tube (6AC7) and noting its effect on the drifting picture. Replace it and then remove the 6AL5 sync discriminator tube and notice its effect on the drifting of the picture. If both of these tubes affect the rate of picture drift, the AFC is functioning and the trouble is due to lack of sync input to the control circuit. This test should be made with good tubes to eliminate the possibility of an erroneous indication when a shorted tube is removed and replaced.

In 630-TS model receivers localization is further simplified because this circuit does not have separate amplifiers for horizontal and vertical sync. If the picture holds vertically it is very likely that horizontal sync is also present along with

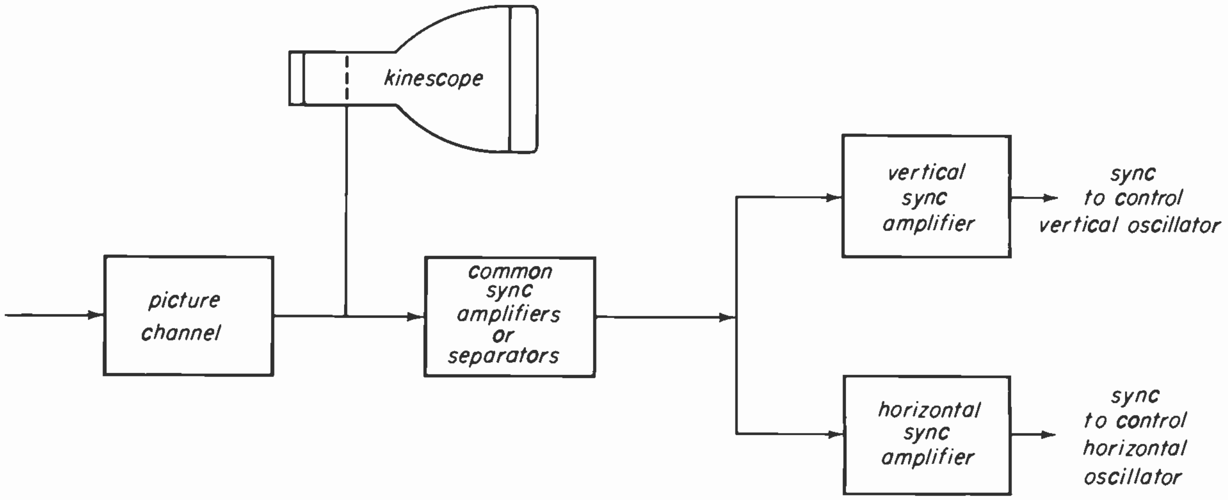

Fig. 35-30

the vertical, and the picture drifting horizontally is probably due to AFC trouble.

LOCALIZING SYNC TROUBLES WITH THE KINESCOPE

35-7. – The first step in localizing a sync trouble can be made by analyzing the picture on the kinescope. A complete loss of sync is indicated on the kinescope screen by continuous movement of of the picture, *which cannot be stopped with the hold controls.* This localizes the trouble to the stages common to vertical and horizontal sync. Some receivers have separate stages for vertical and horizontal sync, as indicated in Fig. 35-30, but it is not very probable to have a trouble in the separate vertical stage and separate horizontal stage simultaneously.

The stages which are common to both horizontal and vertical sync, as can be seen from Fig. 35-30, are the picture channel and the common sync stages. *The kinescope can be used to establish the presence of vertical and horizontal sync at the input to the sync circuits.* The kinescope can be used to do this because of its place in the circuit with relation to the point where sync pulses are taken off for the synchronization circuits. A number of typical arrangements showing the sync take-off point are shown in Fig. 35-31.

In each of these circuits the evidence of good sync pulses on the kinescope screen will show, because of the position of the kinescope in the circuit, that these good sync pulses are also present at the input to the sync circuits.

The horizontal and vertical sync pulses both appear on the kinescope. They can be seen by adjusting the horizontal and vertical hold controls to move the blank-

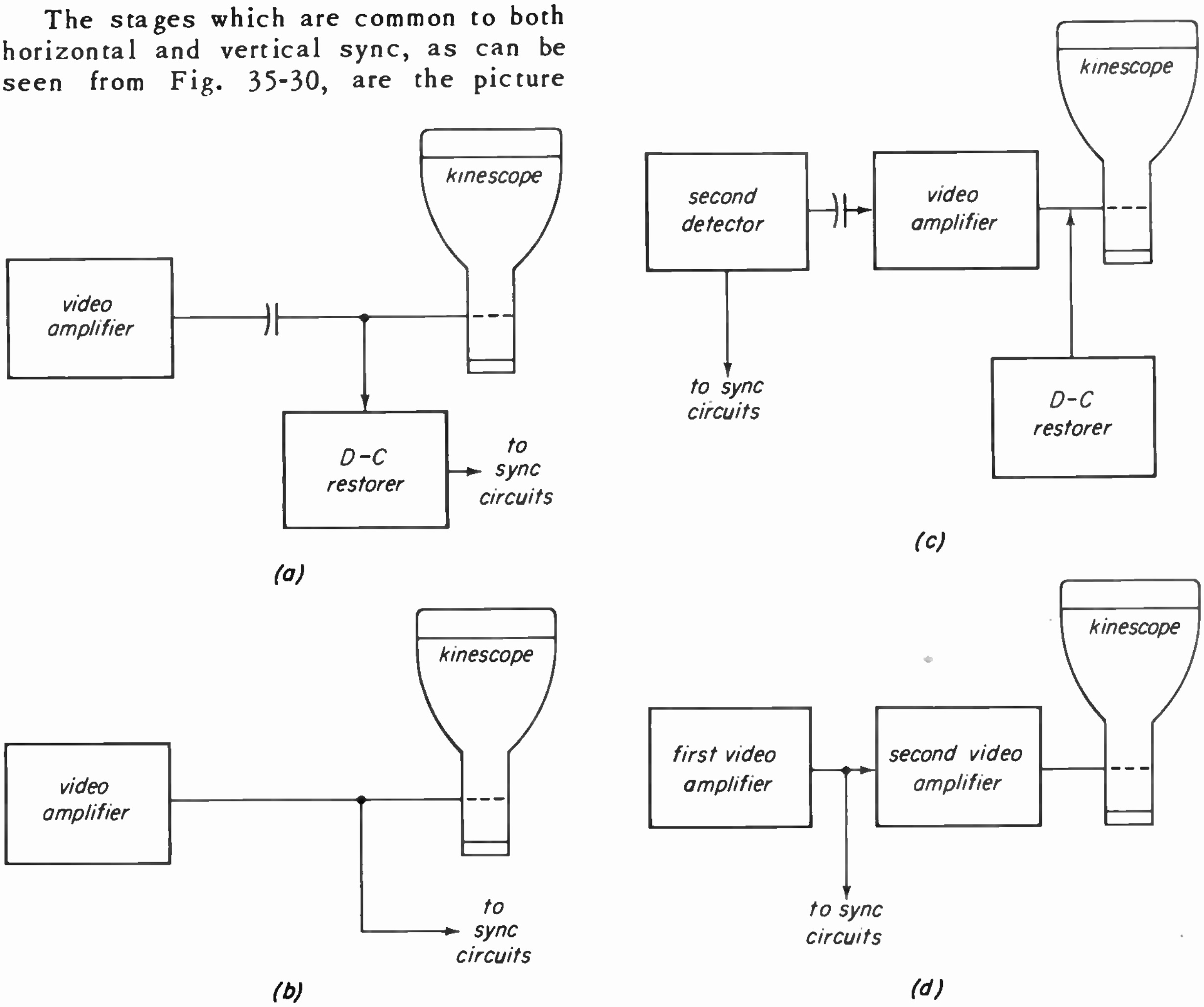

Fig. 35-31

ing bar in toward the center of the screen, and adjusting the brightness and contrast to make them visible. The brightness should be slightly increased, and the contrast slightly decreased. Figure 35-32 illustrates how a good vertical sync pulse will appear, and Fig. 35-33 illustrates how a good horizontal pulse will appear on the kinescope.

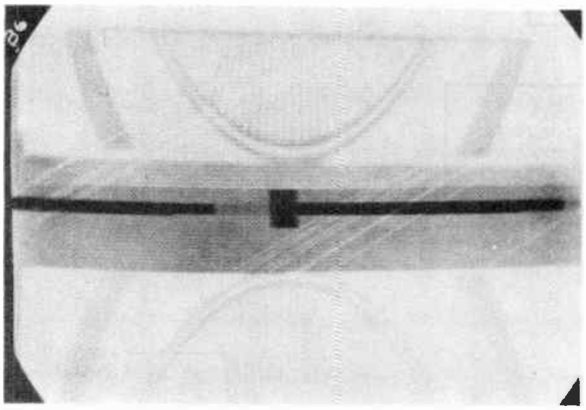

(a) Normal Vertical Sync

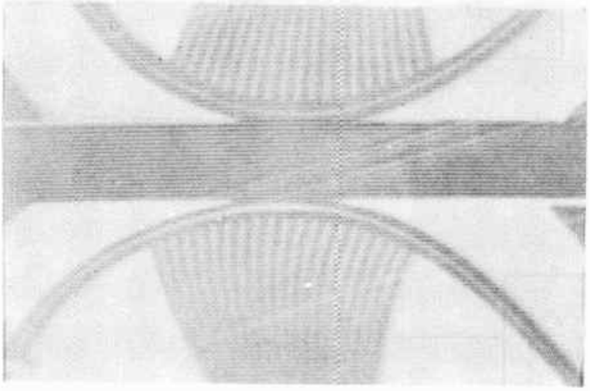

(b) No Vertical Sync

Fig. 35-32

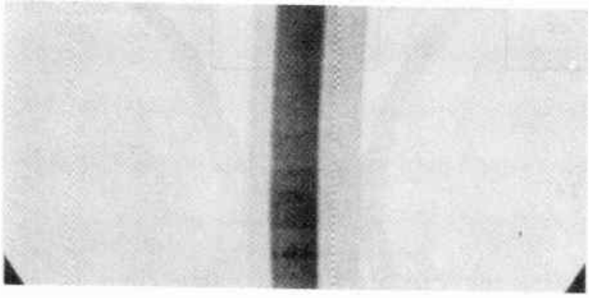

Normal Horizontal Sync

Fig. 35-33

The relative amplitude of the sync pulses with respect to the picture and blanking signal will be shown by their relative blackness on the kinescope screen. The blanking pulse should be as black as the blackest part of the picture. The sync pulse should be definitely blacker than the blanking pulse or any part of the picture as in Fig. 35-32 *a*. In *b* the absence of sync is shown by the absence of the blacker-than-black bar. The presence of sync pulses in the kinescope screen, as illustrated in Figs. 35-32 and 35-33, establishes that the sync pulses are present at the input to the sync circuits. If there is no vertical or horizontal hold the trouble is localized to loss of sync in the common sync stages. If only vertical or horizontal hold is lost, then the trouble is either in a separate vertical sync amplifier; or a separate horizontal sync amplifier or AFC circuit.

If good sync pulses do not appear on the kinescope screen, sharply defined and blacker than the blanking pulse, then sync pulses are not present at the input of the sync circuits. This indicates trouble in the picture channel, which may be due to:

(a) Limiting in the video amplifier
(b) Clipping of sync in the i-f or video stages because of incorrect bias.
(c) Poor r-f or i-f alignment
(d) Poor low frequency response in the video amplifier

LOCALIZING SYNC TROUBLE IN THE SYNC SECTION

35-8. – When the picture on the kinescope has neither vertical nor horizontal hold, and sync pulses are visible on the kinescope screen, the sync is lost in the sync section. The trouble is localized to *that part of the sync section where horizontal and vertical sync are acted upon together*. Some typical circuit arrangements are shown in block diagram form in Fig. 35-34.

Complete loss of horizontal and vertical sync in a circuit such as that of Fig. 35-34 *a* localizes the trouble to the common stages 1, 2, or 3. In Fig. 35-34 *b*,

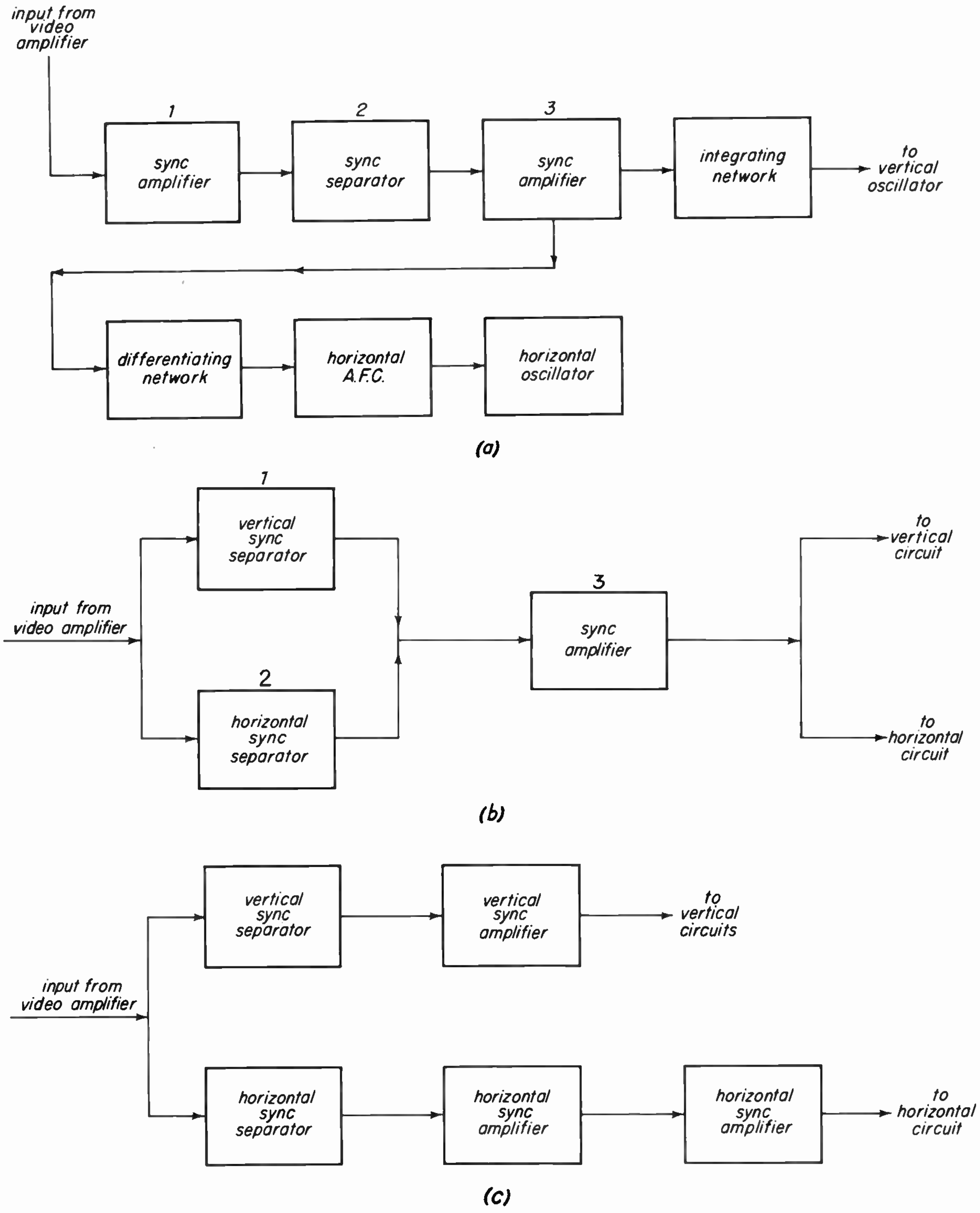

Fig. 35-34

complete loss of sync localizes the trouble to the common stage 3. In Fig. 35-34 *c*, there are no common sync stages, and a trouble in a separate horizontal and vertical sync circuit at the same time is not usual. However, it is possible that two separate stages are combined in one dual tube. In this case a single failure (of the tube) could cause loss of horizontal and vertical sync at the same time.

A trouble may occasionally occur at a point in the circuit through which both the horizontal and vertical sync pass, and yet only one kind of sync pulse will be affected. This usually happens to the vertical pulse. An example of this is a wrong value or partially open capacitor through which both sync pulses pass. The vertical pulse will be greatly attenuated in passing through this reduced capacitance because of its low frequency. The horizontal pulses, being much higher in frequency will pass through with very little attenuation and will be able to lock in the horizontal oscillator.

TRACING SYNC PULSES BY EAR.

35-9. – This section describes a method of signal tracing for the sync pulses, that can be used in the field without the need for an oscilloscope. The use of the oscilloscope in sync circuits is explained in a later lesson on oscilloscopes. The sync pulses can be made audible by sending them through the audio amplifier section of the TV receiver. The sync pulses will produce a characteristic sound in the loudspeaker which is easily identified and traced through the various stages. This sound will be a low frequency buzz, produced by the 60 cycle repetition rate of the vertical sync pulse. Horizontal pulses are inaudible to most people. However in nearly every case some vertical sync will be present everywhere in the sync section, even if the stage is a horizontal sync amplifier. The presence of this buzz will enable a check to be made of the passage of signal through a sync stage.

The volume control of the audio amplifier can be used as a rough gain control. A stage-to-stage check of the sync signal can be made from where they are first taken off in the video section right up to the point where they are impressed upon the deflection oscillators. *A loss of gain in going through a sync stage does not necessarily indicate trouble in this stage.* A sync stage may remove some of the sync pulse itself in order to insure more complete separation of video or noise from the sync, and consequently, the total pulse amplitude may be reduced. This separation is accomplished by low plate voltage or high bias on the sync tube. In a stage, then, where the bias is high for that particular type of tube, reduced sync pulse output may be expected, indicated by reduced sync buzz output from the loudspeaker. However, when the bias and the plate voltage are normal, amplification of the sync pulse can be expected, and a reduction of sync buzz in such a stage may indicate trouble.

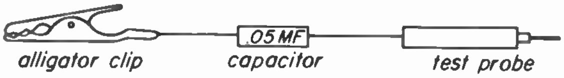

Fig. 35-35

To couple the sync pulses into the audio amplifier a simple probe is used, consisting of a .05 mfd., or 0.1 mfd. 600V condenser in a clip lead as shown in Fig. 35-35. A sound i-f tube should be removed to keep all other sound out of the audio amplifier. The connections are illustrated in Fig. 35-36. Connection may be made at A or B in the audio section, whichever is a more convenient point on the chassis. In either case connection should be made so that the volume control will vary the input to the audio amplifier.

To insure that the audio signal heard in the loudspeaker is the sync signal, two precautions should be taken.

First the vertical oscillator should be disabled. This is necessary because signal from the vertical oscillator may feed back into the sync stages. This will provide a false indication, as this signal will produce the same sound output as the sync pulses. The vertical oscillator should therefore be disabled, and this can be done in one of two ways. The vertical oscillator tube can simply be removed from the socket, unless it is combined in the same tube envelope with a sync amplifier or AGC tube. In this case it should be disabled by grounding the grid of the vertical oscillator with a clip lead.

The second precaution is that considerable rushing noise will be heard from the speaker even with no incoming signal,

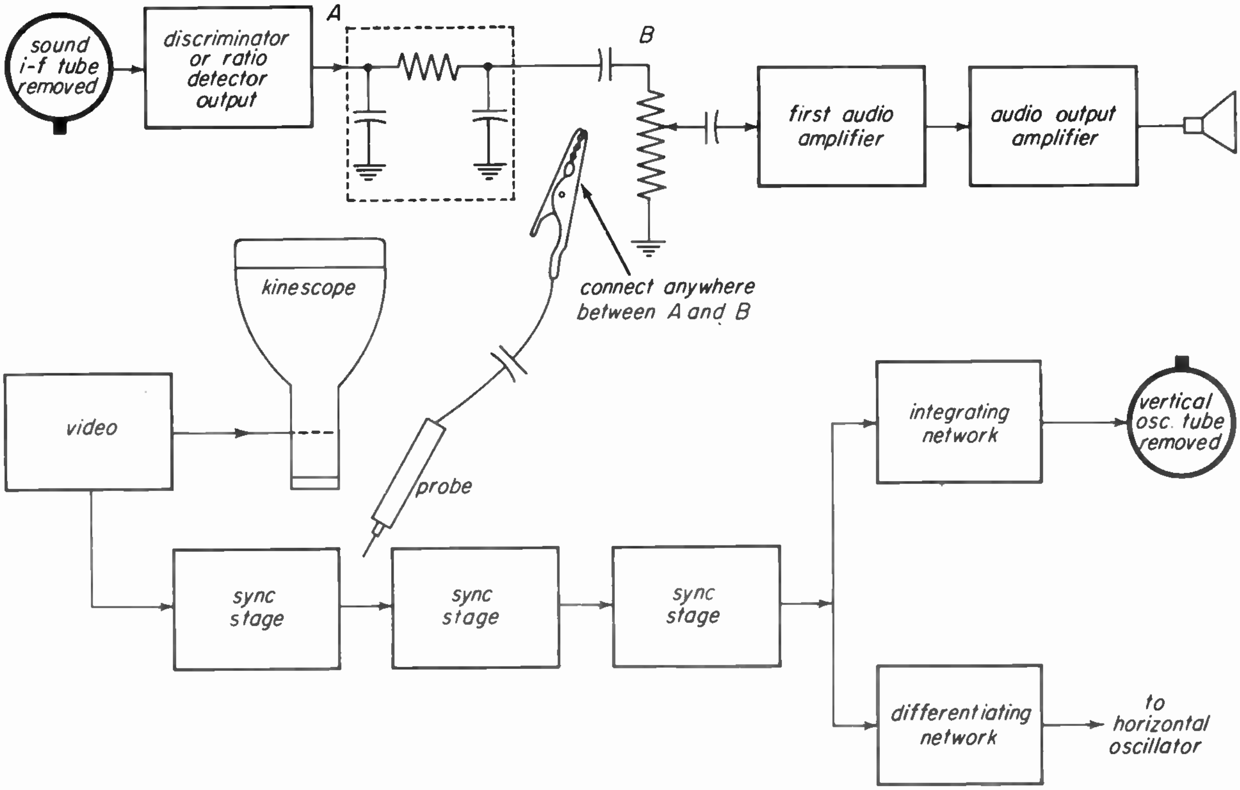

Fig. 35-36

when the probe is applied to the various points in the sync section. The sync pulses can be positively identified by switching on and off channel, or momentarily removing the antenna, thereby removing sync signal. The sync buzz should disappear when the signal is removed.

This method of tracing will now be described in further detail by application to a typical circuit such as the 630TS. The sync section is reproduced in Fig. 35-37. The starting point for sync in this circuit is the d-c restorer. The d-c restorer diode conducts only on tips of sync, and sync pulses will be in the output. Therefore in this type of circuit. sync pulses should be heard when the probe is applied to the d-c restorer. From there the sync pulse is applied to the grid of the 1st sync amplifier V118 through the 0.05 mfd capacitor C144. The reactance of this capacitor to the sync pulses is not high and about the same amount of sync buzz should be present on the grid side of this capacitor. An increased amount of sync buzz should be heard at the plate of the 1st sync amplifier V118. The sync pulses are coupled to the 2nd sync tube V119 through a 270 mmf capacitor. The reactance of this small capacitor to the vertical sync pulses is quite high, and therefore there will be a considerable decrease of sync buzz when the probe is applied to the grid side of this capacitor. The sync will be again amplified by the 6SH7 stage and increased sync buzz will be heard at this plate. Very little attenuation will occur in the 0.05 mfd capacitor coupling the 2nd and 3rd sync tube, and so the same signal will be heard at the grid of the 6SN7 sync tube. However, there will be less sync buzz at the plate of this tube than at the grid. This is the normal indication here and does not indicate trouble in this stage. An examination of the voltages on this stage will show why this is so. Notice that the first two sync stages have high plate and screen voltages. This would lead us to expect a gain through this stage and this is what occurs. The third stage, however, has a comparatively low plate voltage. This is done to compress video or noise in the

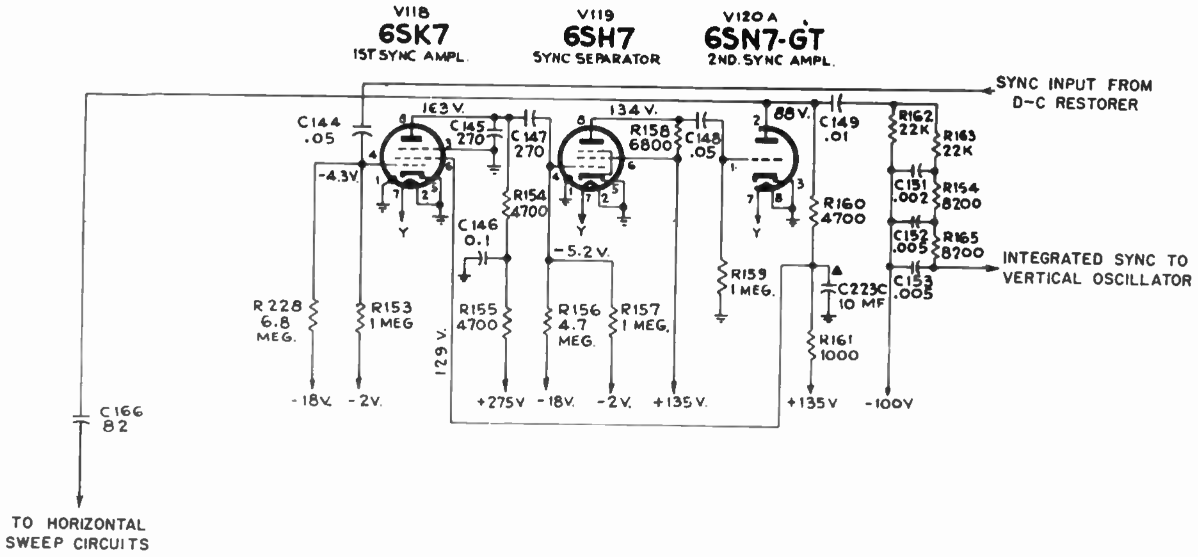

Fig. 35-37

sync and should therefore lead us to expect reduced sync output from this stage, and this is what occurs. From the plate of the 6SN7 sync amplifier the sync signal can be traced through C149 into the vertical integrating network, and through C166 into the horizontal differentiating network. Very little sync buzz will be heard on the other side of C166 because of its high reactance. The signal will be only slightly attenuated in passing through C149 into the integrating network. Each section of the integrating network reduces the vertical pulse peak voltage somewhat. Therefore there will be slightly less sync buzz at each section of the integrating network, but the signal can be traced right into the oscillator circuit.

The absence of signal at any point indicates trouble between that point and the point where sync buzz last appeared. Having localized the trouble to a specific stage, the defective component can then be found by voltage or resistance checks.

While the probe is connected to the audio amplifier for signal tracing purposes, the effectiveness of the bypass condensers C146, and C223C can be checked. No sync buzz should be heard when the probe is applied to the high side of these capacitors if they are bypassing the signal to ground.

TRACING SYNC PULSES WITH A VOLTMETER

35-10. – An alternate method of tracing sync pulses is to measure the grid-voltage change produced by the presence of sync pulses. This method is not as sensitive as the one previously described, which utilizes the high gain of the audio amplifier. This voltage change can usually be measured only after the sync pulses have had some amplification. However it may be useful in some cases as in a receiver where the audio section is on a separate chassis, and obtaining an audio output is not convenient.

A voltage change will occur across the grid resistor of a sync amplifier when grid current flows. As the sync signal is coupled from one stage to the next, the coupling capacitor will establish an average level for the signal because it removes the d-c component from the signal, as illustrated in Fig. 35-38. If the voltage above the base line, (represented by A) swings high enough to make the grid go positive, grid current will flow and this current will cause a change of voltage across the grid resistor. The sync voltage can swing positive toward the tip of the sync pulses or in the opposite direction, depending on the polarity of the sync signal. This *change* in voltage indicates the presence of sync pulses at the grid of

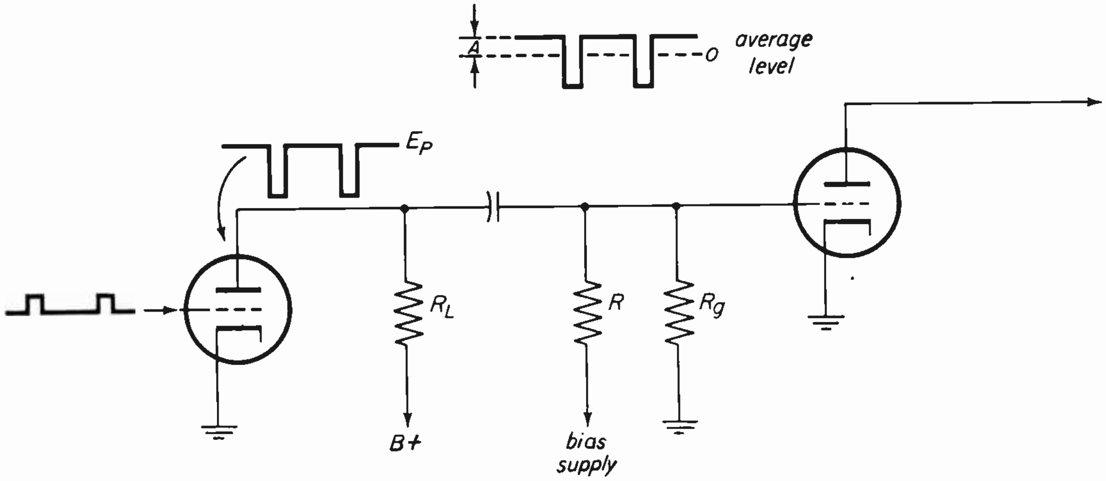

Fig. 35-38

the tube. Sync can then be traced through the various stages using this indication. The exact amount of voltage change varies from about 1V to 10V, or more, depending upon the amount of signal and type of circuit.

The vertical sync pulse cannot be traced through the integrating network in this manner because of the low average value of the d-c voltage rise across the condenser in the integrating network. (The vertical pulses last about 160 microseconds, but they are 16,667 microseconds apart in successive fields.)

A high resistance meter – at least 20,000 ohms/volt – should be used for this purpose because of the high resistance encountered in the grid circuits. The meter should be connected across the grid resistor of a sync stage and the signal momentarily removed. In this way the change of voltage caused by the sync pulses can be noted.

CRITICAL HOLD CONTROLS

35-11. – When the hold controls have to be set very carefully to prevent the picture from rolling vertically, or the horizontal hold control cannot be turned through its normal range while the picture remains in sync, this indicates weak sync pulses to the vertical oscillator or to the horizontal control circuit, respectively, The trouble can be isolated within the sync section according to whether horizontal or vertical sync, or both, are weak. Referring to 35-34 *b* for example, weak horizontal and vertical sync would localize the trouble in stage 3. Weak vertical sync only would localize the trouble in stage 1, etc. After localizing the trouble in the sync section in this manner, the plate, screen and bias voltages of the suspected stages should be checked.

CHECKING SYNC AMPLIFIER BIAS

35-12. – The voltage divider networks which are used to place a certain bias on a sync amplifier stage generally use high resistances. If a voltmeter other than a VTVM is used to measure the bias, the resistance of the voltmeter will change the distribution of voltages so that an erroneous indication will be obtained from the meter. Consider for example the circuit shown in Fig. 35-39 *a*. Because of the voltage divider the grid voltage is –5 volts (1/6 of –18V = –3V across R2. Adding –2V and –3V yields –5V at the grid.)

Connecting a 20,000 ohms/volt meter on its 10 volt scale from grid to ground effectively places the 200,000 ohm internal resistance of the meter across R2. The total resistance of this circuit becomes 167,000 ohms, and the voltage at the grid is now 2.55 volts.

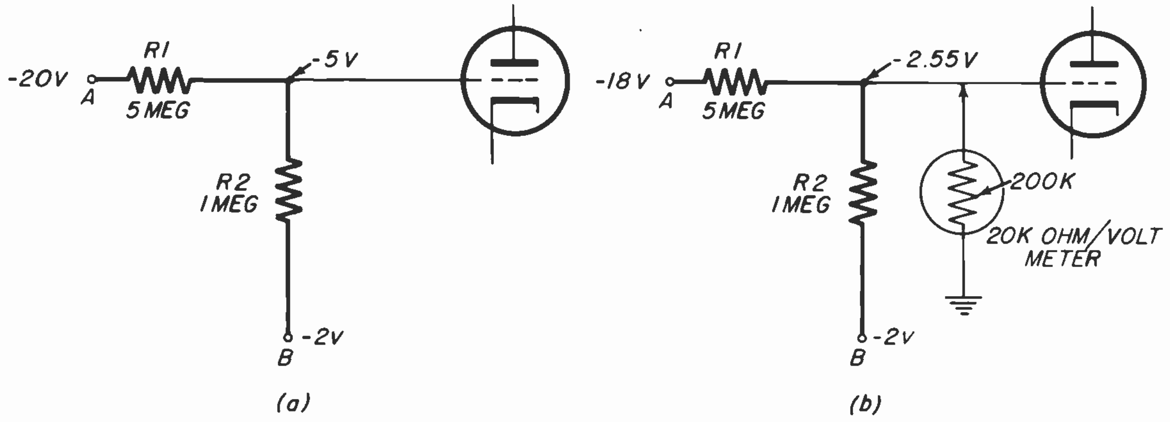

Fig. 35-39

It is evident then that the bias at the grid cannot be measured directly unless a vacuum tube voltmeter is available. The bias can be indirectly checked with a volt-ohm-milliammeter by measuring the power supply voltages at A and B. These voltages are supplied from taps on a low resistance voltage divider, and connecting the meter at these points will not change the voltage. Having checked the voltage in this manner, the resistors comprising the voltage divider should be checked with an ohmmeter. If the resistors are correct, and the voltages supplied to them are correct, the bias at the grid must be correct. In this way the bias can be checked indirectly without introducing errors due to the meter.

LEAKY COUPLING CONDENSERS

35-13. – In some amplifiers a leaky coupling capacitor can be readily located because it places a positive voltage on the grid to which it is connected. When there is some negative bias on the grid, as in the circuit of Fig. 35-40, the small positive voltage leaked by a coupling capacitor will only reduce the bias somewhat. Since this is also done when the meter itself is connected to the grid, a leaky coupling capacitor in such circuits cannot be located in this manner.

If a coupling capacitor is suspected of leakage, a check can be made in the following way. Connect a voltmeter *across* the plate load resistor of the tube to which one side of the suspected capacitor is connected, and remove the tube as shown in Fig. 35-40. There is no path for current to flow with the tube removed, *unless* the coupling capacitor is leaky. Consequently, a voltage drop across the plate load indicates that the coupling capacitor is leaky.

An alternate method is to disconnect the grid end of the capacitor, and connect it to the voltmeter. The other end of the condenser remains connected to B+ through the plate resistor. Any leakage in the capacitor will cause positive voltage to appear across the voltmeter.

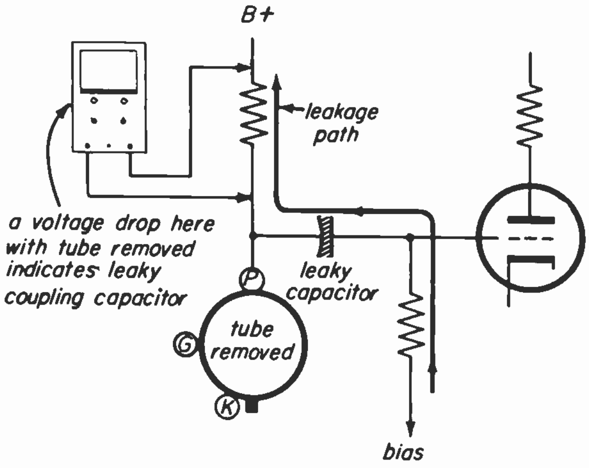

Fig. 35-40

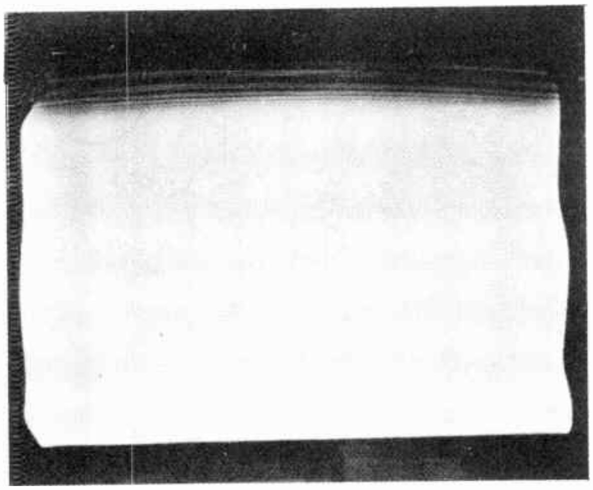

Fig. 35-41

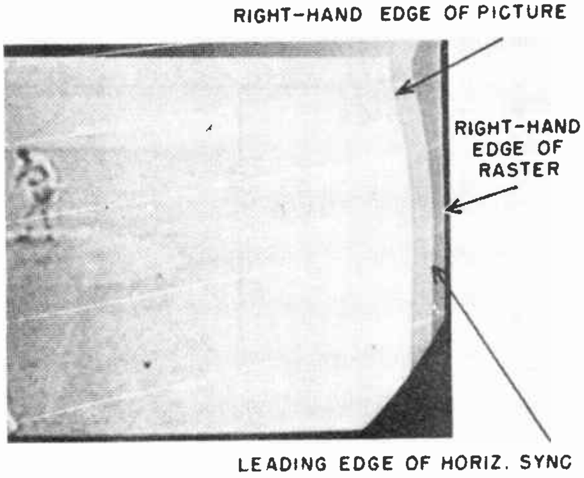

Fig. 35-42

PICTURE BENDING

35-14. – There are two basic reasons for picture bending. One defect changes the length or causes a displacement of some of the horizontal lines which make up the raster. Hum in the deflection circuits is one way in which this may happen. This produces bending of the raster, and therefore makes the picture appear bent. The other cause of picture bending is a defect which interferes with the synchronization of the horizontal oscillator by the sync pulses. This can happen if some of the horizontal sync pulses are lost, or if video signals are mixed with the sync pulses, etc. In this case *the raster will be straight,* but the picture will have bend in it. This is because the horizontal oscillator will be triggered erratically, and the picture information will be on different parts of succeeding horizontal lines.

The trouble that causes bending of the picture can be isolated by observing whether the raster bends, or if only the picture has the bend. This can be done by removing the picture, and adjusting the centering so that the edges of the raster may be seen. Figure 35-41 illustrates bend in the raster, while Fig. 35-42 shows bend in the picture but not in the raster. Raster bending may be caused by troubles in the power supply filtering, horizontal deflection circuit, high voltage, filtering, or the deflection yoke. Other causes may be magnetic fields near the picture tube, or a magnetized metal picture tube cone. The troubleshooting of raster bending has already been discussed in the lesson on troubleshooting low voltage power supplies.

LOCALIZING PICTURE BENDING TROUBLES.

35-15. – Picture bending which appears on a straight raster may be caused by trouble in three general sections of the receiver: the picture channel, the sync section, and the horizontal AFC circuit.

The *first step* in localizing picture bending troubles is to carefully check the picture quality for what might be a less obvious but more basic defect in the receiver. Before paying any attention to any weak hold, or pulling, of the picture, examine the raster for straight sides, absence of hum, and note, whether the brightness control functions normally. Then see if the picture has sufficient contrast, proper blanking (absence of retrace lines), and absence of hum in the picture, etc. These defects, if any, should be taken care of first. A bend in the picture may quickly call attention to itself because it is so distracting, but it may only be an *incidental effect* of a more basic trouble in the receiver.

When it is determined that the picture is normal in all respects except that there

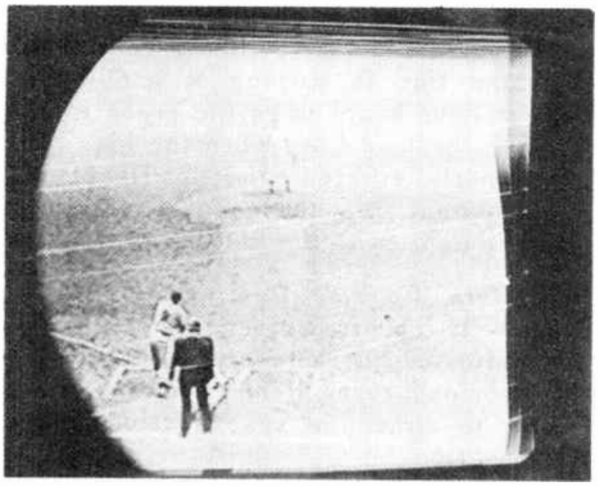

Fig. 35-43

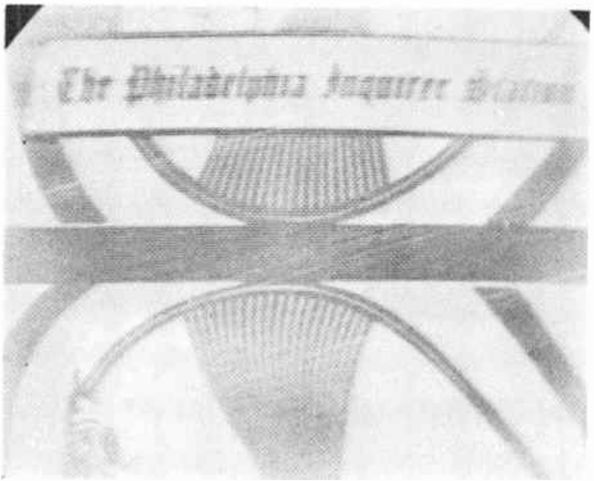

Fig. 35-44

is picture bending, then the trouble may be due to the following:

1. *In the picture channel:*
   - a. Clipping of sync in the r-f, i-f, or video circuit, due to trouble in the amplifiers, or excessive signal input, or incorrect AGC setting.
   - b. Hum modulation of video signal with the sync pulses.
   - c. Loss of sync due to poor low frequency response in r-f, i-f or video circuits, because of poor r-f or i-f alignment, or a defective video amplifier.
   - d. Vertical sync variations on the bias line caused by improper AGC filtering. This will remove some of the horizontal sync that follows the vertical sync pulse.
   - e. Very weak signals, interference or ghost reception conditions.
2. *In the sync section:*
   - a. Hum modulation of sync pulses.
   - b. Improper operation of sync amplifiers—incorrect bias, plate or screen voltages, or an improperly bypassed stage.
   - c. Radiation of vertical deflection pulses into the horizontal sync stages.
3. *In the AFC section:*
   - a. Hum modulation in the AFC circuit.
   - b. Hunting in AFC circuit.
   - c. Radiation of extraneous signals into AFC circuit from other parts of the chassis. This may be from the video amplifiers, or the audio amplifiers.

Picture Bending Caused by Picture Channel Troubles. – Sync troubles that originate in the picture channel circuits will affect the synchronization of the picture. A heater-to-cathode leakage in a picture i-f stage will hum modulate the sync to cause picture bending, but will also produce hum bars in the picture, as shown in Fig. 35-43. This points out that the trouble is in the picture channel. Clipping of sync in the video amplifier, due perhaps to incorrect AGC setting, will cause picture bending, and will also affect the reproduction of the sync pulses on the kinescope screen, as shown in Fig. 35-44. This locates the trouble in the picture channel. And, as another illustration of sync trouble that originates in the picture channel, see Fig. 35-45. Here, poor r-f, i-f alignment has reduced the low frequency response so that the sync pulses are weak, making picture bending possible. The sync pulse amplitude as seen on the kinescope is therefore also reduced, so that it no longer is definitely blacker than anything in the picture. This indication locates the trouble in the picture channel. Careful examination of the picture and the sync pulse on the kinescope screen will show whether the picture bending is due to trouble in the picture channel. When the picture has good brightness and contrast, and the relative blackness of the

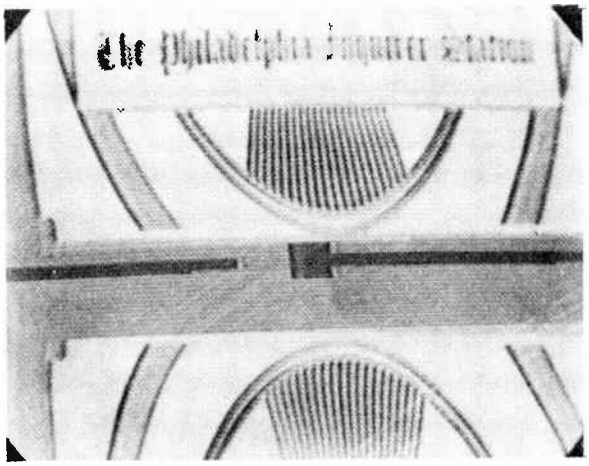

Fig. 35-45

sync pulse on the kine screen appears normal, the trouble is likely to be in the sync circuits, and not in the picture channel.

Picture Bending Caused by Excessive Signal. – Sometimes the signal strength may be so great that it cannot be handled by the receiver, even though it has no defect. If the receiver is located close to the transmitter this possibility should be considered. To check whether this is the case, attenuate the antenna signal. If the holding ability of the picture *improves* as the signal is reduced, and there is no trace of snow in the picture, the signal input is probably excessive and should be attenuated. However, the bias on the r-f and i-f amplifiers should be checked for there is a possibility the bias may be incorrect. Incorrect bias may be due to defective AGC action, or incorrect AGC action, or incorrect AGC setting.

Picture Bending Caused by Defective AGC Filtering. – In an AGC-controlled receiver the bias will tend to increase slightly during the presence of the vertical sync pulse. This is normally filtered out. If this filtering becomes defective, however, the rise in bias which occurs near the top of each field will reduce the horizontal sync pulses occuring at this time, and may cause picture bending at the top.

The filtering on the bias line can be be checked by using the audio amplifier of the receiver for signal tracing as illustrated in Fig. 35-36. If the voltage on the bias line is varying at a 60-cycle buzz will be heard when the probe is applied to the bias line. When the bias line is properly filtered, there will be *no sound output* from the speaker when the probe is applied to the bias line.

Picture Bending Due to AFC Troubles. – If the picture bending trouble is not indicated in the picture channel by the previous tests it must be localized further to either the sync section or the AFC section.

Fig. 35-46

This can be done by allowing the AFC to operate without the controlling action of the sync pulses and seeing if the bend is still present. To do this, disconnect the condenser that connects horizontal sync pulses into the AFC circuit. (If there is a *separate* horizontal sync amplifier, it can be removed, instead.) Removal of the sync will throw the horizontal oscillator off frequency. Now readjust the oscillator with the main frequency adjustment, until a complete picture reappears and use the horizontal hold control to stop the picture long enough to get a look at it. Inspect the picture and determine whether the picture bending is still present. If the picture bending *is present* with horizontal sync removal, than the trouble is in the AFC circuit. If however, the picture bending is no longer present when the horizontal sync is removed, the trouble is in the sync section. Troubles in the AFC circuit which can cause picture bending are heater-cathode leakage in the AFC tube, (see Fig. 35-46) or coupling of interfering signals into the AFC circuit.

An occasionally encountered trouble is "hunting" in the AFC circuit, which is illustrated in Fig. 35-47. This happens when the "anti-hunt" circuit in the AFC becomes defective. As an example, an open 0.05 ufd capacitor from the grid of the control tube to chassis in a Synchrolock type of AFC circuit will cause this trouble.

Fig. 35-47

Picture Bending Caused by Sync Troubles. – Troubles can occur in the sync section which result in incomplete separation of the sync pulses from the video signal. This can be caused by incorrect bias, plate or screen voltages. This is indicated *when the picture bending changes as the picture content changes.* This of course will only happen during a program, and not when a stationary test pattern is being shown, but is a useful indication for localizing this type of bending.

Miscellaneous Causes of Picture Bending. – External interference such as diathermy or strong r-f radiation will cause picture bending, but this interference will also appear in the picture with its characteristic pattern, and can therefore be identified. The effect of diathermy on the picture and sync is shown in Fig. 35-48. Very weak signals or close reflections as in Fig. 35-49 may cause poor sync, and these too can be seen in the picture. If the cause is due to one of these, changing channels will remove the trouble.

Fig. 35-48

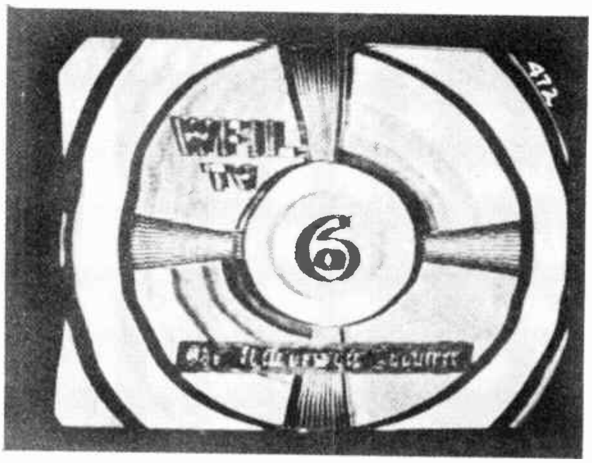

Fig. 35-49

SUMMARY OF TROUBLESHOOTING SYNC

35-16. The general methods for troubleshooting sync defects are summarized here:

1. Determine whether the moving picture (loss of hold) is caused by the deflection oscillator being off frequency, or due to no sync, by observing the effect of the oscillator frequency controls. If one complete picture can be produced, the loss of hold is due to sync trouble. In a set with horizontal AFC, no horizontal

hold can also be due to AFC trouble. This can be checked by using the tests explained in the Section 35-15.

2. Locate where the sync pulses are being lost by examining the sync pulses on the kinescope. If sync pulses of correct relative blackness appear on the screen, then sync is being lost between the sync take-off point in the picture section and the input to the deflection oscillator. If the sync pulses do not appear on the kinescope screen, check the video amplifier, AGC setting or the bias voltages for the r-f and i-f stages, and their alignment.

3. Locate where the sync is being lost in the sync section by considering whether both horizontal and vertical sync are lost, or only one of these.

4. Trace the sync pulses up to defective stage, using the receiver's audio amplifier, or a d-c voltmeter to measure grid leak bias.

5. Check bias, plate and screen voltages on the defective sync stage to locate the defective component.

◆

NOTES

NOTES

NOTES

NOTES

TELEVISION SERVICING COURSE

PREPARED BY

RCA INSTITUTES, INC.
A SERVICE OF RADIO CORPORATION OF AMERICA

HOME STUDY DEPARTMENT
350 West 4th St., New York 14, N. Y.

LESSON THIRTY SIX

DEFLECTION OSCILLATORS

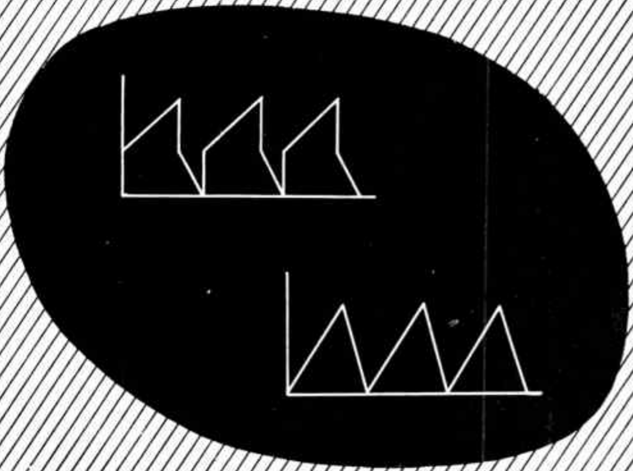

Lesson 36

PRODUCING THE RASTER

36-1. In previous lessons, mention was made of deflecting the electron beam in the kinescope. This beam must be deflected 525 times horizontally and 2 times vertically in order to produce the raster (the rectangular area which includes all the scanning lines). The movement of the beam across the screen must be linear, to prevent distortion by "crowding" or "stretching" any part of the picture. In addition, the movement of the beam must be synchronized with the movement of the beam in the television camera tube, so that corresponding elements of the picture will be properly reproduced on the kinescope in the television receiver. This lesson will discuss the circuits which produce the voltages and currents necessary for linear deflection of the electron beam. These are known as deflection circuits; they are located in the sweep section of the receiver. The block diagram of Fig. 36-1 shows, in simplified form, the essential parts of the sweep circuits which produce the raster in a television receiver.

Video signals containing synchronizing pulses and other information enter the sync separator, which separates the horizontal and vertical synchronizing pulses from the composite video signal. The horizontal sync pulses are applied to the horizontal AFC section, where their frequency and phase is carefully controlled so that the lines in the raster will not be displaced from their proper position. The pulses are then sent to the horizontal sweep circuit, where they trigger a deflection oscillator. This oscillator produces voltages of the proper waveform to give linear deflection of the electron beam when applied to the deflecting coils (or plates in the case of the electrostatic type of tube).

The vertical sync pulses go to the vertical sweep circuit, where they trigger a deflection oscillator whose output is fed to the vertical-deflection coil or plates. Thus the electron beam is made to move across and down the face of the tube to produce the raster, which appears as a rectangular area of scanning lines of equal brightness when no video signals are present. When video signals are fed to the kinescope, portions of the lines are darkened in accordance with the image scanned by the beam in the camera tube, and the result is a picture on the kinescope.

Deflection Waveforms -- In kinescopes employing electrostatic deflection, a sawtooth voltage waveform must be applied to the deflecting plates to obtain linear deflection. For tubes with electromagnetic deflection coils, a current with a sawtooth waveshape is needed.

Sawtooth Waveform -- A sawtooth waveform is shown in Fig. 36-2.

It can be seen that the "trace" portion of the wave (from O to T), increases at a constant rate with respect to time, or in

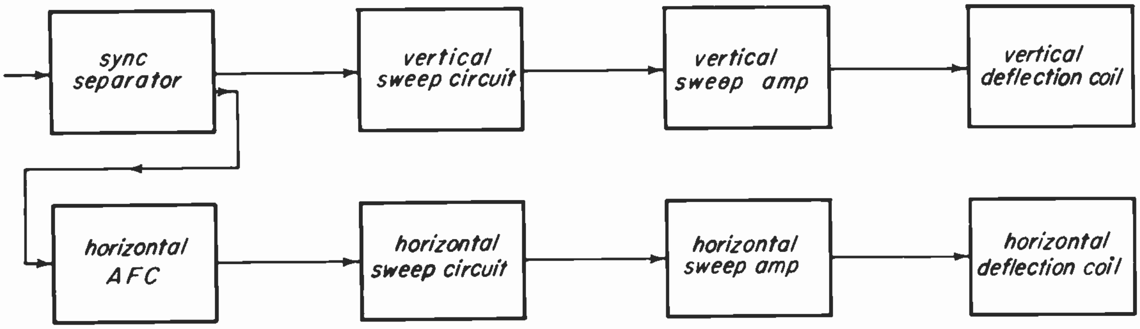

Fig. 36-1

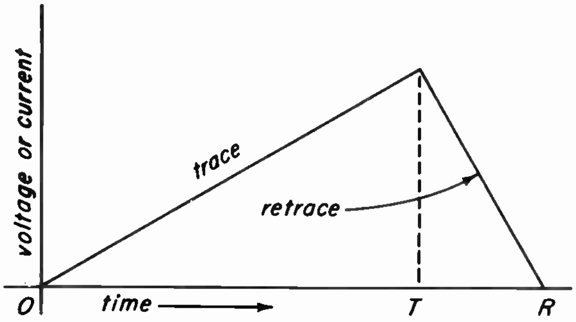

Fig. 36-2

other words, at a linear rate. Since deflection of the electron beam is directly proportional to the current in the deflection coil (or to the voltage on the deflecting plates in electrostatic tubes), the beam will move at a linear rate when such a waveform is applied. For horizontal scanning, the entire sawtooth wave occurs during about 63.5 microseconds, of which the trace portion takes about 56.5 microseconds, and the retrace about 7 microseconds. The retrace is not linear, but this does not matter because the beam is blanked out during the retrace and no picture information is sent during that time.

Since the beam must move down as well as across the screen, a current with a sawtooth waveshape must also be applied to the vertical deflection coil. Here the timing is different, but the operation is the same as that of the horizontal coil.

From the previous discussion it is evident that a current with a sawtooth waveshape is needed in the deflection coils if linear scanning is to be accomplished. However, a sawtooth voltage applied to a deflection coil will not produce a sawtooth current.

Trapezoidal Waveform -- Some idea of just what kind of waveshape is needed can be gained from the diagrams of Fig. 36-3.

If a sawtooth voltage is applied to a resistor, the current through the resistor is in phase with the voltage and the waveshape remains the same. This is shown in Fig. 36-3*a*. If this sawtooth voltage is applied to a pure inductance, the current will *not* be of sawtooth waveform, as shown in Fig. 36-3*b*.

A sawtooth current waveform could be obtained in a *pure* inductance by applying a rectangular shaped voltage wave as is shown in Fig. 36-3*c*. However, all coils have a certain amount of resistance as well as inductance. Therefore, it is necessary to combine the sawtooth voltage wave and the rectangular voltage wave into the trapezoidal wave shown in Fig. 36-3*d*. When this voltage waveform is applied to a deflection coil, the current waveshape is a sawtooth and the resulting deflection is linear.

MULTIVIBRATORS

36-2. There are a number of ways in which the voltage waveform required for

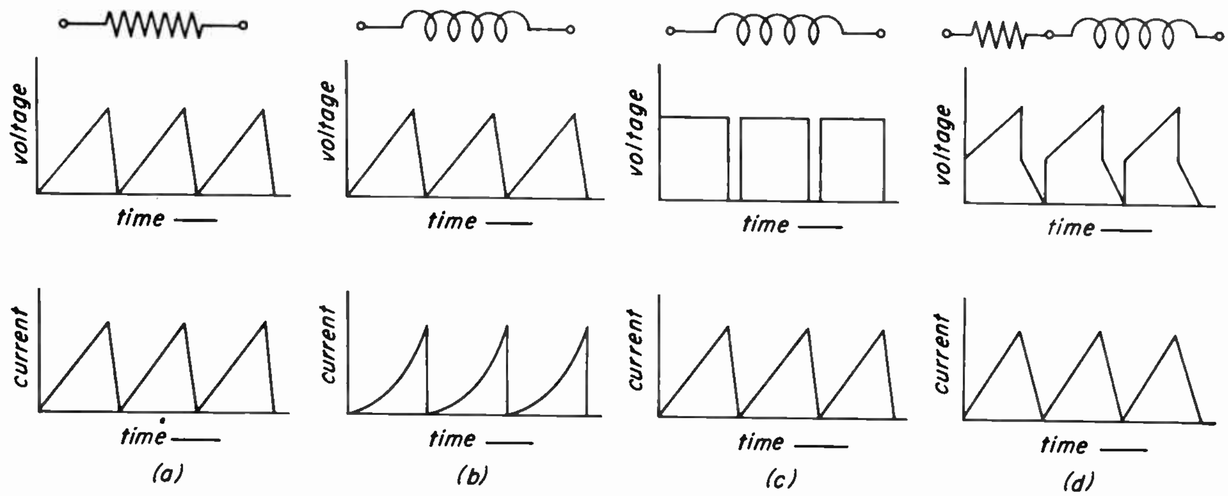

Fig. 36-3

deflection circuits can be produced. One of these is a special type of multivibrator which produces sawtooth waves directly.

Basically, the multivibrator consists of two resistance-coupled amplifiers connected together in such a way that the output of the first feeds the input of the second, and the output of the second feeds the input of the first. A simplified circuit is shown in Fig. 36-4*a*. There are two possible stable states for the circuit: V1 conducting when V2 is cut off, and V2 conducting when V1 is cut off.

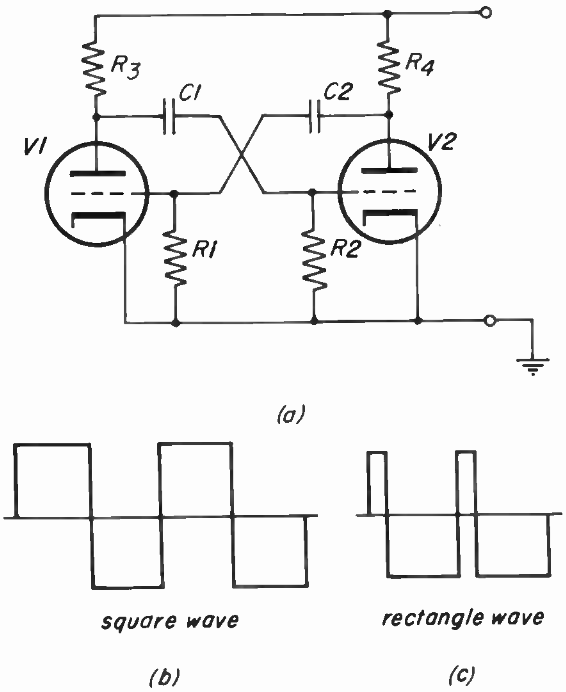

Fig. 36-4

When plate voltage is applied to the circuit, one tube tends to draw slightly more plate current than the other, and because of the feedback, the plate current of this tube increases rapidly, while the plate current of the other tube decreases to cutoff. The tube that is cut off remains in that condition until the negative voltage charge accumulated on its grid capacitor decays enough to permit plate current to flow. The action is then reversed. The second tube begins to draw current rapidly, the first is driven to cutoff, and the cycle is repeated. The multivibrator can be synchronized by injecting a sync pulse into either grid circuit.

If the two tubes are identical and R1 =R2, R3 =R4, and C1 =C2, the circuit is known as a "symmetrical" multivibrator. Its output is a square wave (Fig. 36-4*b*). If the corresponding resistances and coupling capacitors are not the same, it is known as an unsymmetrical multivibrator, and its output waveshape resembles that of a rectangular wave (Fig. 36-4*c*).

Cathode-Coupled Multivibrator.--In the cathode-coupled multivibrator circuit, shown in simplified form in Fig. 36-5, the output of V1 is fed to the grid of V2. The output of V2, taken from the cathode, is fed to the cathode of V1 Thus V2 acts like a cathode follower for V1.

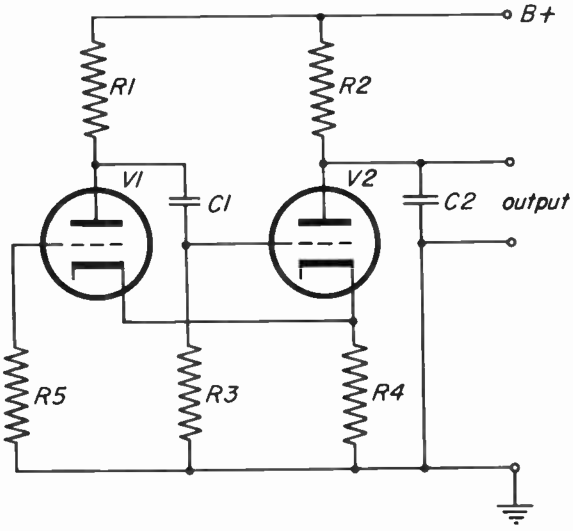

Fig. 36-5

The operation of the circuit is as follows: when the plate voltage is turned on, C1 acquires a charge through the cathode-grid circuit of V2 and R4 (current flows from cathode to grid because the grid is positive with respect to the cathode at this time). A negligible amount of charging current flows through R3, because the resistance of R3 is much greater than that of R4 and the cathode-grid resistance of the tube (when the grid is positive). This flow of charging current through R1 and R4 lowers the plate voltage of V1 and raises its cathode bias until the tube cuts off, which occurs almost immediately after the plate voltage is turned on. However, as C1 becomes charged, the plate voltage of V1 rises again because the charging current falls off rapidly, and the voltage across R4 decreases until V1 begins to conduct again. The voltage across R1 is transferred to the grid of V2 through C1, which then begins to discharge through R3 instead of through the grid-cathode circuit, because the grid is now negative with respect to ground.

With the grid of V2 negative, the current through R4 decreases, making the cathode of V1 negative with respect to its grid, which causes a drop in its plate voltage. This in turn causes more negative voltage on the grid of V2. This cumulative action continues until V2 cuts off. During the time that V2 was conducting, C2 was partially shorted; now that the tube is cut off, this partial short is removed and C2 begins to charge through R2.

As the current through R3 decreases, discharging C1, the voltage across R3 (which is the bias for V2) also decreases. At the same time, the plate voltage of V2 increases because of the charging up of C2. Soon a point is reached where V2 begins to conduct. Then C2 discharges through V2, causing a large current to flow through R4 (greater than when V2 was cut off). This large voltage drop makes the cathode of V1 positive, causing a decrease in its plate current, reducing the drop across R1, and applies a positive potential to C1 causing it to charge through the cathode-grid circuit as it did when the plate supply was turned on. When C2 is discharged, the current through R4 drops to a low value, applying a negative voltage to the cathode of V1. This causes plate current to flow and lowers the plate voltage. With plate current flowing in V1, the cycle begins again. The result of these interrelated actions is that C2 is charged slowly through R2 and discharged quickly through V2 and R4, producing a sawtooth wave.

When this sweep circuit is used in television receivers or oscilloscopes, a dual triode such as the 6SN7 is often employed. The grid of V1 is grounded through a resistor, and sync signals are injected into the circuit across this resistor (R5).

BLOCKING OSCILLATORS

36-3. The most common type of sweep oscillator used in television receivers is the blocking oscillator. A slightly simplified diagram of this kind of sweep oscillator is shown in Fig. 36-6*a*.

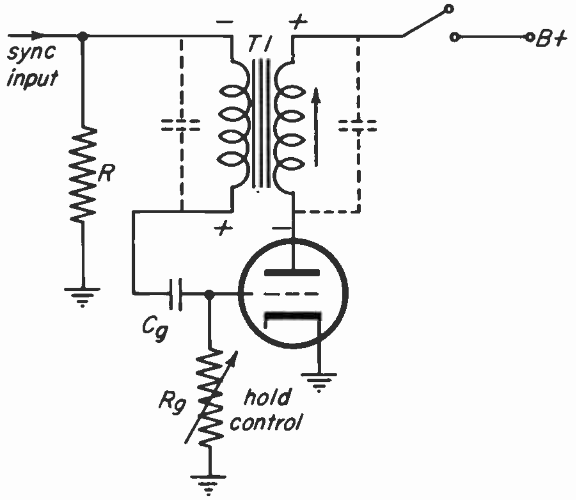

(a)

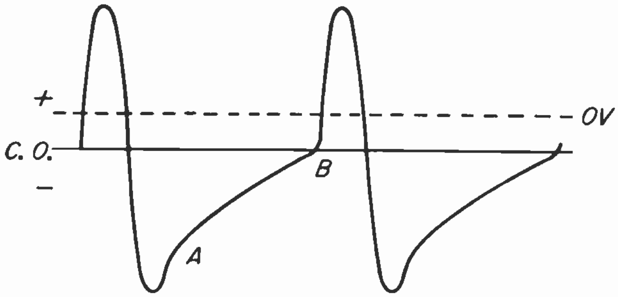

(b)

Fig. 36-6

A blocking oscillator consists of a tube, a transformer (T1), and a grid-leak bias network, C_g-R_g. Resistor R has been added to provide a means for synchronization. The blocking-oscillator transformer is constructed with a special type of core material and very closely coupled primary and secondary windings. It usually is quite small in physical size to help minimize its capacity and keep its natural resonant frequency high. It should be noted that although no actual tuning capacitance is shown, the transformer has a natural resonant frequency of its own because of its inductance and stray capacity, and therefore has a tendency to oscillate when properly excited. One of the characteristics of a blocking-oscillator transformer is its very low Q. This makes it possible for the transformer to oscillate for one cycle, rest for a while, go through another cycle, and so on. Because this transformer is usually designed for use in the circuit of a particular set, it is advisable to use an identical replacement part when replacement is necessary.

Basically, the circuit is that of an oscillator having tuned-grid and tuned-plate coils coupled together with almost unity coupling. There is usually a slight step-up ratio in the windings from plate to grid. This may be in the order of 1.5 to 1 or so, with the grid winding having the larger number of turns. With the oscillator in operation, a very high positive signal voltage appears on the grid of the tube. This causes grid current to flow, and charges C_g to a voltage approaching the peak signal value, which may be several hundred volts. C_g takes on a negative charge on the grid side so its voltage is a bias. On the negative swing of oscillation, the tube is cut off and is subject to the large negative bias. Because of the low Q of the transformer, the oscillation damps out quickly and the tube remains cut off until C_g discharges enough to permit conduction, whereupon a new cycle begins.

Operation of the Circuit -- Inasmuch as this circuit is a very important one, it will be profitable to review its operation in detail. When the filaments are heated and the tube is ready to conduct, the switch in the plate circuit is closed and current begins to flow as shown by the arrow. This surge of current shock excites the transformer circuit and it begins to oscillate. In this process the transformer takes on the polarities indicated in the drawing. The transformer is connected so that feedback voltage of the right phase is coupled back to the grid to reinforce the tendency of the transformer to oscillate.

In other words, when the switch was first closed, current began to flow, from zero to an increasing value. This caused a positive voltage to be induced on the grid, further increasing the plate current and showing that an *in-phase* feedback voltage appeared on the grid, encouraging oscillation. The positive portion of the grid oscillatory cycle continues to rise until it reaches a maximum value determined by the constants of the transformer and the tube characteristics. By this time the grid may have risen several hundred volts positive. Of course, grid current flows, and in the process C_g is charged almost to the peak value of the positive grid swing. This means that a grid-leak bias considerably greater than the cut-off value of the tube has been accumulated. However, the tube does not cut off because of the positive signal voltage on its grid.

After the maximum positive grid swing has been reached, the plate current begins to decrease, and this in turn causes the positive grid voltage to begin decreasing. This process continues with the grid winding of the transformer going into the negative portion of its oscillatory cycle. With the grid swinging negative, the tube soon cuts off and the transformer is left to oscillate on its own. Capacitor C_g now begins to discharge, and its bias voltage is added in series with the negative swing of the grid winding, driving the tube far below cut-off.

Because the transformer has a low Q, the next positive oscillatory swing is not sufficient to drive the tube into conduction and the oscillations are quickly damped out. Capacitor C_g continues to discharge until the bias is reduced to cut-off value, after which the tube begins to conduct and a complete new cycle takes place. The part of the waveshape marked A-B (Fig. 36-6*b*) represents the discharge curve of C_g.

Hold Control -- Because C_g must discharge to the tube's cut-off value to start a new cycle, it is obvious that the repetition rate of oscillations can be controlled by varying the time constant involving C_g. This can be done most conveniently by making R_g variable. Reducing the value of R_g decreases the time constant of C_g and increases the repetition frequency, since C_g will discharge to the cut-off bias more quickly. Conversely, increasing R_g

increases the time constant and decreases the repetition frequency, because C_g will take longer to discharge to the cut-off bias value.

Thus we see that a blocking oscillator is capable of delivering a series of pulses at a variable repetition rate. The variable resistor R_g is called the "hold" control. This system of controlling the frequency of the blocking oscillator is used only for the vertical sweep channel. In the horizontal system an automatic frequency-control system is used, which will be described later.

BLOCKING OSCILLATOR AND DISCHARGE TUBE

36-4. In a television receiver the blocking oscillator is used to control the production of a sawtooth or trapezoidal wave in another circuit. Let's see how this can be done. Early television receivers used a circuit like the one shown (in simplified form) in Fig. 36-7 to produce the necessary sawtooth wave.

In this arrangement a dual triode is used, one half functioning as the blocking oscillator and the other half as the "discharge tube". The discharge tube and its associated components are responsible for the production of the sawtooth (or trapezoidal) wave, when actuated by the blocking oscillator.

Note that the grids and cathodes of both triodes are connected together. Thus any signal appearing at the grid of the blocking oscillator (V1) also affects the discharge tube (V2) in the same way. The characteristic wave at the grid of the blocking oscillator is of such nature that cut-off bias is present for the major part of one cycle, and the tube conducts only for a very short portion of the cycle. This is also true of the discharge tube. During the time V2 is cut off, the sawtooth capacitor C1 charges in the positive direction through R1 and R2. The time constant is chosen so that the charging is essentially linear. A linear charging characteristic may be obtained if the capacitor is allowed to charge for about 20 to 30 percent of the time constant period of R1, R2, and C1. After a time, the grids of both V1 and V2 rise above cut-off, and both tubes conduct heavily for a short time. During the conduction time, the plate-to-cathode resistance of V2 is low, causing C1 to discharge (current flowing from ground to cathode to plate to C1 to ground in Fig. 36-7). This rapid discharge forms the retrace of the sawtooth, while the slower linear charging forms the trace portion of the sawtooth.

Size Control -- In television receivers it is desirable to control the amplitude of the sawtooth wave. This provides a means of controlling the height (or width) of the picture. Since the period of charg-

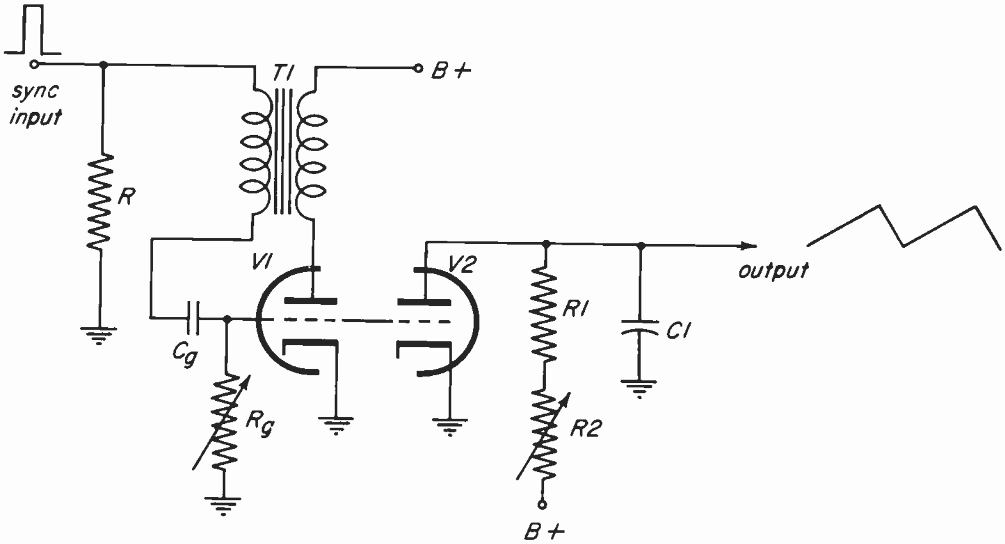

Fig. 36-7

ing is fixed by the repetition rate of the blocking oscillator, the amount of charge may be varied by adjusting the time constant of the charging circuit. This is done most conveniently by varying a resistor such as R2. In the vertical deflection system, this resistor is known as the "height" control, and is located on the rear panel. In most receivers there is no corresponding control in the horizontal system, as we shall see later.

Synchronization -- We have now provided methods of developing a sawtooth wave and of controlling its amplitude. We must now determine how to synchronize the blocking oscillator. First, we need a synchronizing pulse of positive polarity and short duration. The method of obtaining sync pulses has already been described fully in a previous lesson.

In order to synchronize a blocking oscillator, it must be adjusted so that its free running (unsynchronized) repetition frequency is slightly lower than the sync-pulse repetition rate. The reason for this will become apparent as we proceed. Incidentally, the picture moves slowly downward when the free running frequency is slightly low. The locking action of the sync pulse in the blocking oscillator can be seen in Fig. 36-8.

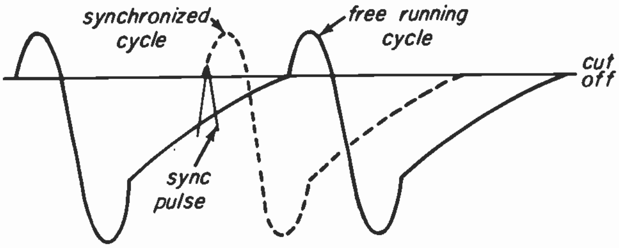

Fig. 36-8

The blocking oscillator is adjusted so that its repetition rate is slightly lower than that of the sync pulses. This means that the time interval between blocking-oscillator pulses tends to be greater than the time between sync pulses. Thus a sync pulse will arrive at the grid of the blocking oscillator before the next free-running cycle ordinarily begins. If the sync pulse is of sufficient amplitude, it will drive the grid above cut off (Fig. 36-8). This forces the blocking oscillator to begin a new cycle slightly before it otherwise would, and so locks in the oscillator with the sync pulses. Note that the sync pulses actually increase the frequency of the blocking oscillator to that of the sync-pulse rate, thereby providing accurate synchronization.

Under certain conditions, the oscillator simply will not sync in. For example, if the free-running frequency is set too low, the sync pulse appears much lower on the condenser discharge curve and may not be able to drive the grid above cutoff. If the free-running frequency is too high, the sync pulse will appear at the wrong time (after the blocking oscillator pulse), and again will not be able to sync the oscillator.

Trapezoidal Generator -- We have described the generation of a sawtooth wave. However, as was mentioned previously, a trapezoidal waveshape is often needed. The circuit for developing this is quite simple, requiring the addition of only one resistor to a sawtooth generator. A simple trapezoidal generator circuit is shown in Fig. 36-9.

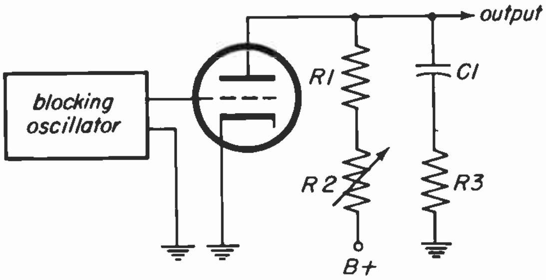

Fig. 36-9

It can be seen that the only addition to the sawtooth circuit is resistor R3. To understand how this trapezoidal circuit operates, one thing must be kept in mind: for a sawtooth voltage wave to appear across a capacitor, there must be a constant current going into the capacitor. Since resistor R3 is in series with the sawtooth capacitor, the same constant current goes through R3. A constant current through a resistor, of course, produces a constant voltage drop that has a square topped waveform. In the circuit of Fig. 36-9, a positive square wave voltage is developed while C1 is charging, and a negative square wave voltage while C1 discharges. Thus, while a sawtooth voltage is formed across C1, a square wave voltage is formed across R3. The output is taken across both the resistor and capacitor, and is therefore the sum of the two voltage waves or a *trapezoidal* voltage wave. This wave is fed into an output deflection amplifier stage and then to the deflection coils.

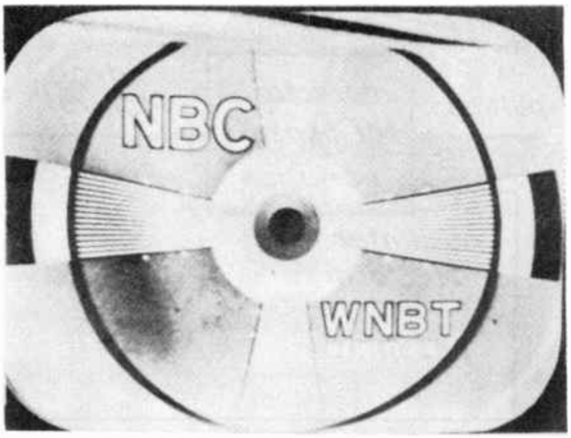

AUTOMATIC FREQUENCY CONTROL

36-5. The simple synchronized sweep generator circuit we have discussed is adequate for the vertical deflection system, but for the horizontal deflection system some form of automatic frequency control is necessary. The simple triggered sweep generator may be triggered by random noise pulses, or it may be affected by ripple in the plate supply voltage, resulting in picture distortion as shown in Fig. 36-10. A system that will automatically control the frequency and phase of the impulse generator in the receiver will correct such conditions. In such a system, synchronization depends on the average of many regularly recurring synchronizing pulses, while short time variations such as noise pulses are filtered out.

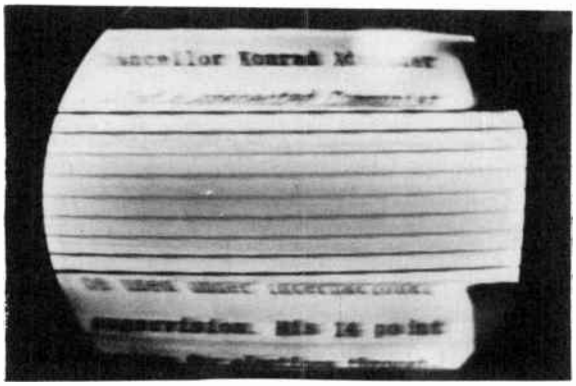

Fig. 36-10

Effect of Noise and Interference Transients -- Fig. 36-11 shows how noise or interference pulses may trigger the impulse generator before the proper time and thus displace a line or a section of the picture. Such noise peaks may accompany the picture signal. When they are of sufficient amplitude to fall into the blacker-than-black region, they are clipped with the sync signals and thus may reach the grid of the impulse generator. Noise impulse *a*, which in the illustration falls about midway between two sync pulses, is not of sufficient amplitude to raise the grid potential above the cut-off value. Therefore it does not affect the oscillator. In fact, even if its amplitude were equal to that of the normal sync pulse, it would not affect the oscillator, since it reaches the grid at a point in the oscillator cycle in which the grid is very negative. A positive pulse of much greater amplitude would be required to raise the grid poten-

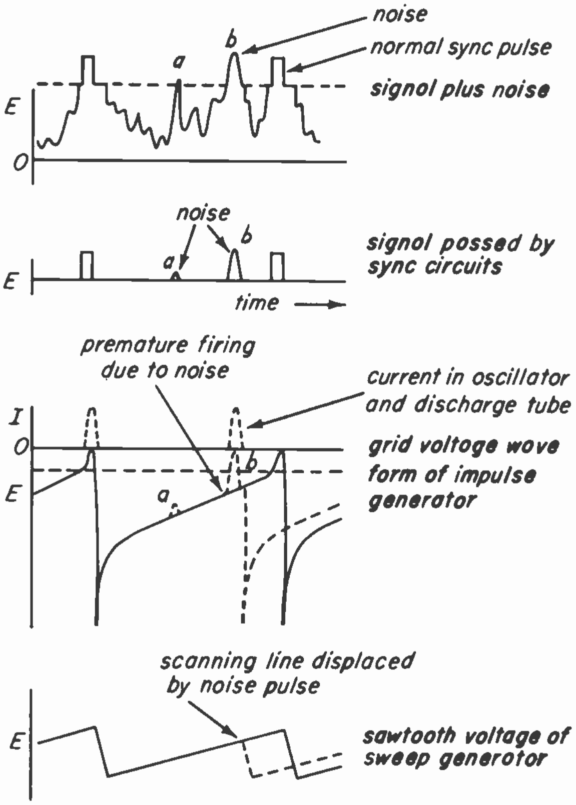

Fig. 36-11

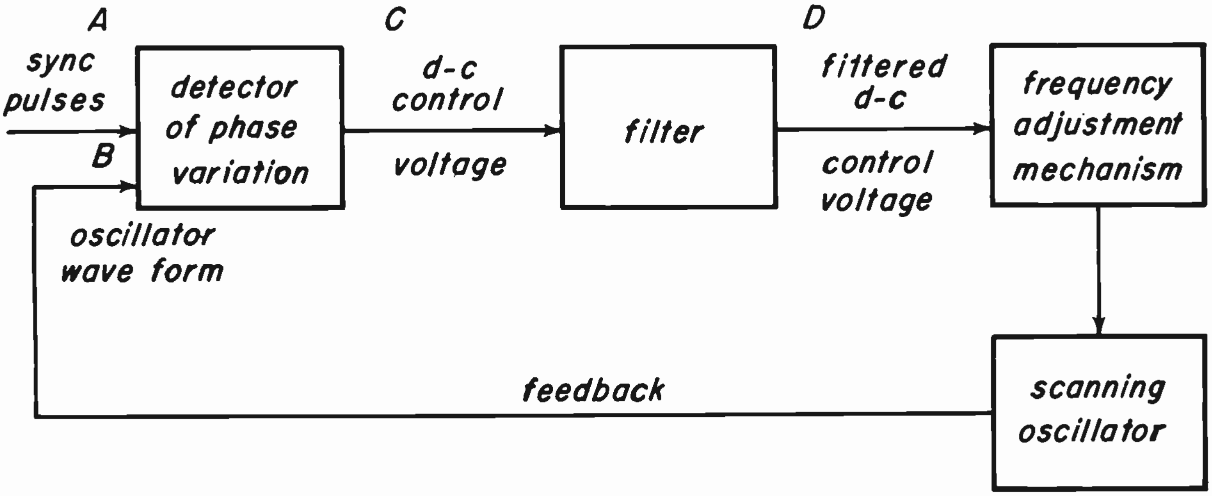

Fig. 36-12

tial above the cut-off value. Noise pulse *b*, however, is just ahead of the normal sync pulse, and it does have sufficient amplitude to cause the grid to rise above the cutoff potential. Thus the oscillator is triggered, and a new cycle is started prematurely. The oscillator is extremely sensitive to noise pulses in this region just ahead of the normal sync pulse, with the result that lines or sections of the picture may be displaced from their proper positions.

Components of AFC Systems -- While automatic frequency control circuits could be used in either the vertical or the horizontal deflection circuits, the need is much greater in the horizontal deflection circuits. Figure 36-12 is a simplified block diagram of the essential components of an automatic frequency- and phase-controlled synchronizing system. We specify a phase-controlled system because it is actually the small variations in phase between the initiating impulse of the scanning generator and the synchronizing pulse that must be corrected. The frequencies of the two signals must be set very close to each other before a circuit for an automatic frequency control system can function effectively. The phase detector, of which several different types may be used, receives the synchronizing signal at *A* and a signal from the scanning oscillator at *B*. The phase detector operates in such a manner that a d-c control voltage appears at its output *C*, containing information (polarity and magnitude) about the phase of the scanning oscillator wave in relation to the synchronizing pulses.

The phase detector will respond to changes in relative phase that may exist at the arrival of each pulse. A filter is necessary to remove rapid variations corresponding to changes caused by noise or interference, and to pass only slowly varying components of control voltage. This filtered d-c control voltage at *D* is then applied to a control device, such as a reactance tube, which restores the phase of the oscillator in relation to the synchronizing pulses. The speed of reaction of the "flywheel effect" of the control system depends on the time constants of the filter components. The reaction must be made slow enough to eliminate variations caused by noise and interference, but fast enough to pass variations caused by slight phase modulation of the synchronizing pulses as generated at the transmitter.

Even when noise conditions are severe, a picture synchronized by automatic frequency control will remain together as a whole, but may appear to move slightly about a balanced position. Single lines or groups of lines will not tear out, because the filter in the horizontal circuit eliminates components in the control signal which would cause the oscillator to change speed abruptly. Under unusually severe conditions, in which synchronizing signals are obliterated for a relatively long period of time (several cycles), the oscillator or oscillators will run at the free frequency until synchronization is again established. When the receiver is properly adjusted, so that the picture will "pull in" properly, the free frequency of the oscillator and the frequency of the sync pulses are very nearly equal.

Synchro-Lock System -- The synchro-lock system provides ease of operation, stability, and good noise immunity.

The synchro-lock circuit consists of the four essential parts of an automatic frequency and phase control system previously explained: (1) detector of phase variation, (2) low-pass filter, (3) frequency-adjusting mechanism, and (4) scanning oscillator. In the synchro-lock system the detector of phase variation is a horizontal sync discriminator circuit, the frequency-adjusting mechanism is a reactance tube, and the scanning oscillator feedback voltage is a sine wave voltage taken from a Hartley oscillator which serves as the first stage in the generation of the horizontal sweep voltage. We will first study the operation of each of these parts, then consider how the complete system works.

Horizontal Sync Discriminator -- The sync discriminator tube is a 6AL5 duodiode, shown in Fig. 36-13 in a circuit which develops a d-c output voltage proportional to the phase displacement between the input sync signal and the sine wave from the horizontal oscillator.

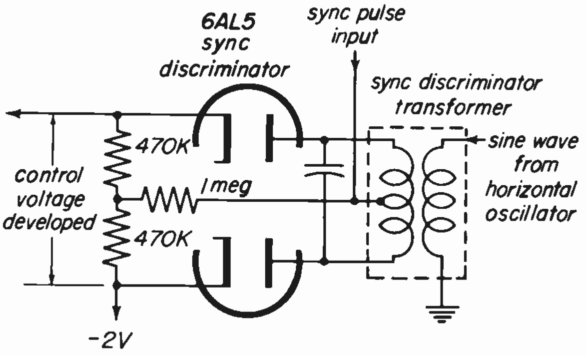

Fig. 36-13

The oscillator coil is closely coupled to the secondary of the sync discriminator transformer. This secondary coil is center tapped so that sine-wave voltages are fed to the plates of the duodiode; these voltages are equal and opposite in phase, as shown in Fig. 36-14*a*. The horizontal sync pulses are applied to the center tap of the sync discriminator transformer, so that these pulses appear in phase and of equal amplitude on the diode plates.

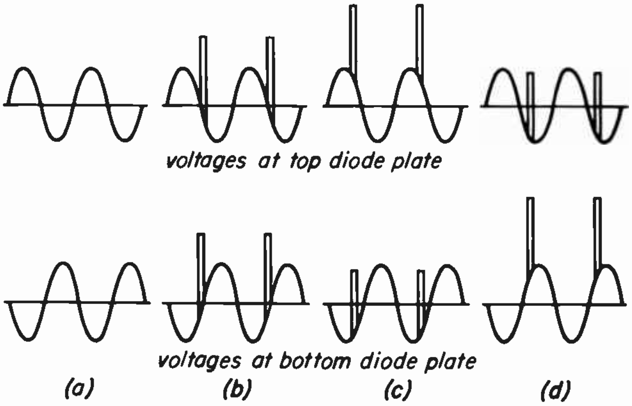

Fig. 36-14

When the pulse and sine wave are properly phased we have the condition illustrated in Fig. 36-14*b*. With the relative positions of the sine wave and pulse such that the pulse falls at the midpoint of the slope of the sine wave, both diodes conduct equally and develop equal voltages across the 470-K load resistors in their cathode circuits. Since the two load resistors are connected together, the voltages across them when viewed from the cathode of one diode to the cathode of the next are opposite in polarity, and the sum of the two voltages is zero. Thus, when the two input voltages are in phase, no control voltage appears at the output of the sync discriminator.

But if the phase of the sine wave changes with respect to the pulse, as indicated in Fig. 36-14*c* and *d*, one diode develops a greater voltage across its load resistor than the other. Thus the output of the discriminator can vary from a positive voltage to zero or to a negative voltage, depending on the phase relation of the sync pulse and oscillator signal. The d-c voltage developed across the two load resistors in series is the control voltage, which can now be filtered to eliminate rapid fluctuations, then applied to the control tube.

Low-Pass Filter Circuit -- The low-pass filter circuit is a network connected between the output of the sync discriminator and the grid of the control tube (Fig. 36-15). Any d-c voltage developed at the discriminator output would appear as added grid bias at the control tube. But rapid changes in d-c voltage, caused by noise pulses or other interference that managed to get through to this point, must be eliminated. This is effected by connecting a relatively small capacitor, C167 (.004 MF) across the 470-K resistor R193. This capacitor, with the .05-MF capacitor C170, form a capacitive voltage divider to attenuate these rapid changes.

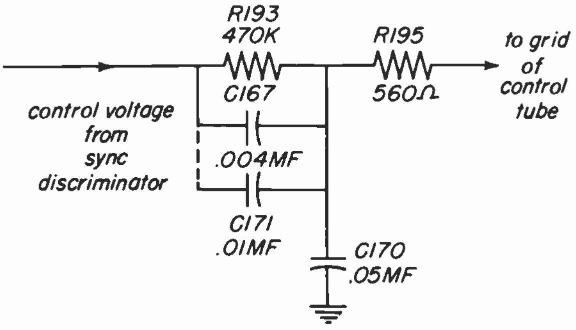

Fig. 36-15

However, if a phase modulation (a slight variation in the positioning of the sync pulse) is present in the sync signal, this variation would also be removed, and would result in horizontal displacement of portions of the picture. Where such a condition exists, a faster response to changes in the sync phase is needed. This is provided for by adding another capacitor, C171 (.01 MF), in parallel with C167, to increase the speed of response. The change compensates for phase modulation in the transmitted sync pulse, but only at the expense of reduced immunity to noise interference.

Horizontal Oscillator Control -- Control of the oscillator frequency is effected by the use of a 6AC7 connected as a reactance tube across the oscillator coil and capacitor tank circuit, as shown in Figure 36-16. A control voltage developed by the sync discriminator is applied to the grid of this tube. Any change in this bias voltage produces a change in mutual conductance (g_m) of the tube, which in turn results in a change in inductance in the oscillator tank circuit, and thus changes the frequency of the oscillator. If the phase of the oscillator shifts with respect to the synchronizing pulse, the corresponding change in the control voltage from the sync discriminator brings the oscillator back into correct phase.

Briefly, the action of the reactance tube in this circuit is as follows. When an inductance is in a circuit, the phase relationship is such that the current in the inductance lags the voltage applied to its terminals. Therefore, if a tube is connected in a circuit so that the plate current lags the voltage between the plate and cathode, it will appear as an inductance to the associated circuit. The tube then acts as an additional inductance, which can be connected in parallel with an oscillator tank circuit to vary the oscillator frequency.

Fig. 36-16 shows how the reactance tube is connected in the oscillator circuit of the synchro-lock system to achieve

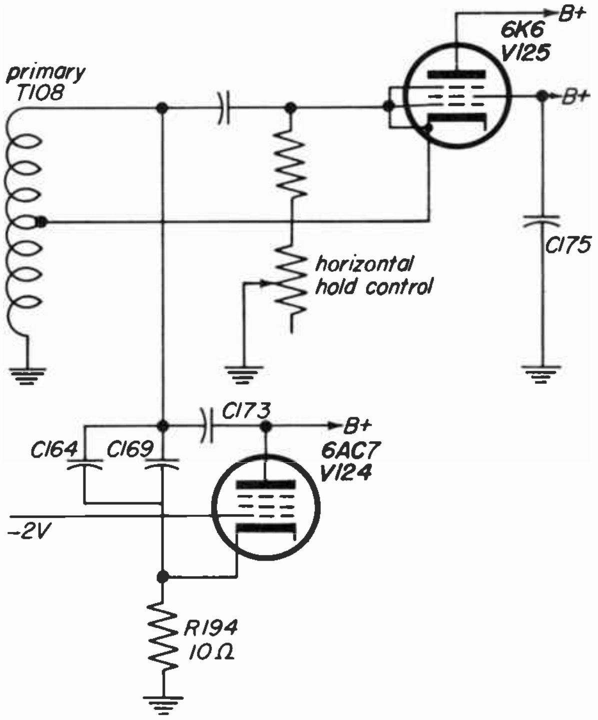

Fig. 36-16

this result. The plate of tube V124 is connected to the top of the oscillator tank through blocking capacitor C173. This capacitor serves to block the d-c voltage applied to the tube plate, but its reactance is negligible at the oscillator frequency of 15,750 cycles. The cathode of the tube, however, is not connected directly to the grounded side of the oscillator tank. It is connected to resistor R194, which is in series with the capacitive leg of the tank circuit. With ground as the common reference point, the oscillator tank voltage is applied to the plate of the tube; but the phase at the cathode is determined by the current through the capacitive leg, which leads the tank voltage by about 90°. For resistor R194, the voltage is in phase with the current, but the ratio of capacitive reactance to ohmic (d-c) resistance is approximately 63 to 1. The actual resistance of R194 has little effect on the phase relationships of voltage and current flowing through it, and, therefore, the voltage from cathode to ground will lead the voltage from plate to ground by about 90°.

What we need to know is the phase relationship between the plate voltage and the plate current. The plate current of the tube varies with and is in phase with the voltage between the grid and cathode. If we consider that a voltage exists between the grid and ground, and an a-c voltage is applied between cathode and ground, the voltage at the grid with respect to the cathode is 180° out of phase with the voltage from cathode to ground – that is, a more positive voltage at the cathode is equivalent to a more negative voltage at the grid. The voltage from grid to cathode then lags the voltage from plate to ground. Because the plate current is in phase with the grid voltage, the plate current of the tube lags the plate voltage and the tube acts as an inductance in the circuit.

The amount of inductance introduced by the tube is determined by the value of the plate current, with increased current representing a lower inductance and decreased current representing an increase in inductance. The inductance introduced by the reactance tube is in parallel with the larger inductance of the coil of the tank circuit. An increase in the reactance tube's inductance results in a higher total inductance in the tank circuit and, therefore, a lower oscillator frequency; a decrease in the reactance tube's inductance raises the oscillator frequency. Therefore, the reactance tube can correct the oscillator frequency whether it is too high or too low.

Thus a negative control voltage from the discriminator, applied to the grid of the reactance tube, will decrease the plate current, increase the reactance tube inductance, increase the tank circuit inductance, and lower the oscillator frequency. The reverse is also true. The connections are such that the control voltage obtained from the sync discriminator operates automatically to bring the frequency of the oscillator in line with the frequency of the sync pulses, and then to keep the oscillator from straying.

As an example of the operation of the circuit, suppose the natural frequency of the oscillator increases. This causes the lower diode of the sync discriminator to conduct more than the upper one, placing a more negative bias on the grid of the reactance tube. This causes plate current to decrease, and since $X = E/I$, the reactance in the plate increases. Since the plate circuit of the reactance tube is effectively inductive and $X_L = 2\pi fL$, inductance increases, which increases the over-all inductance of the oscillator tank circuit. Since $f_o = 1/2\pi\sqrt{LC}$, increasing inductance decreases the resonant frequency of the oscillator, and the rise in oscillator frequency is corrected.

Synchro-Guide System -- A much more compact arrangement than the "synchrolock" system is used in the "synchroguide" system of automatic frequency control.

A duo-triode 6SN7-GT (V108 in the schematic), functions as frequency-variation detector, horizontal oscillator, oscillator control, and discharge tube. This is accomplished by a circuit interconnecting the elements of the two sections of the dual triode, as shown in Fig. 36-17.

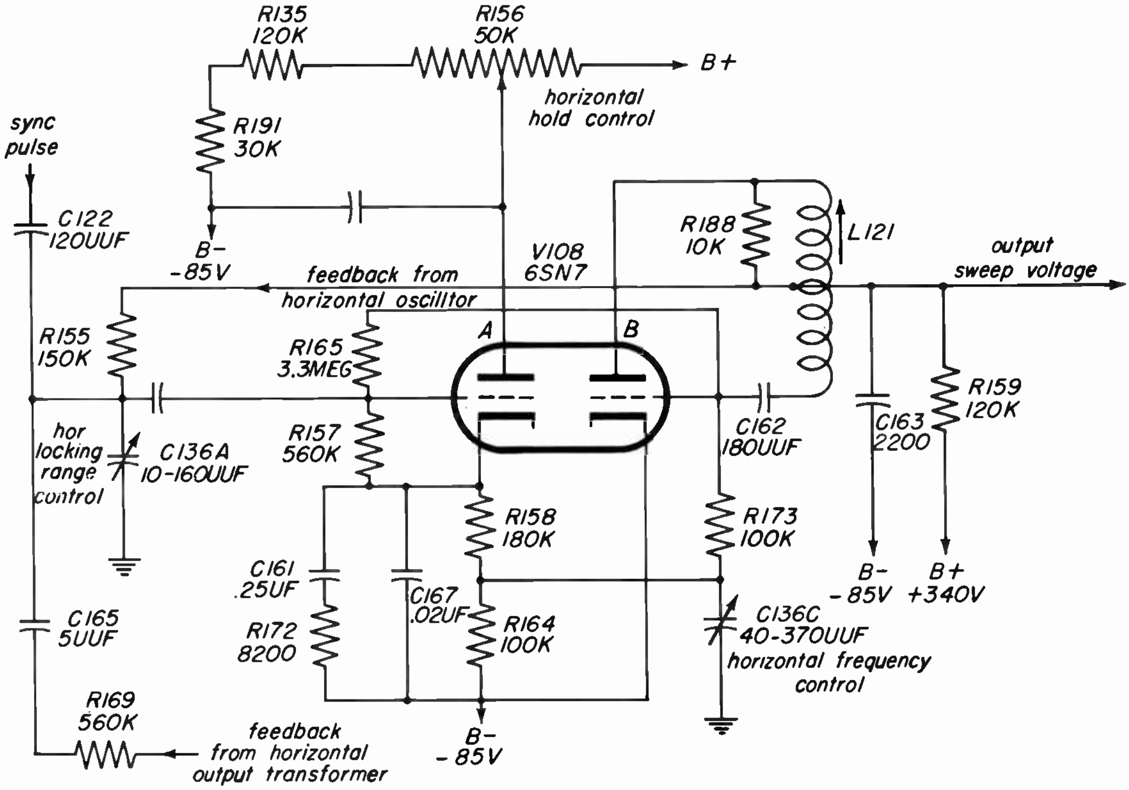

Fig. 36-17

Horizontal Oscillator -- Section B of V108, the horizontal oscillator, is connected as a free-running blocking oscillator, and also serves as the discharge tube in generating the sawtooth sweep voltage. Coarse adjustment of the oscillator frequency is effected by tuning the plate coil of the blocking oscillator with the tuning slug in its core. Fine frequency adjustment is made by varying capacitor C136C, connected across part of the grid biasing resistance. An additional manual adjustment of frequency is provided by the Horizontal Hold Control, R156, which permits a 5 percent variation of frequency by varying the plate voltage of the control tube (V108A).

The sawtooth voltage sweep generator is a conventional circuit consisting of capacitor C163, charging through resistor R159 and discharging through the impulse generator and discharge tube (V108B). The sweep voltage developed then passes on through a horizontal output stage and a horizontal output transformer to the horizontal deflection coils.

Synchro-Guide Circuit -- The circuit of the synchro-guide control tube (V108A) functions as a phase-deviation detector and control mechanism for the automatic correction of the blocking oscillator frequency. A simple method is used to maintain the grid bias of this tube at cut-off value, except for the brief intervals in which a peak positive voltage is applied. A portion of the bias voltage from the blocking oscillator is applied, through the voltage divider consisting of resistors R165 and R157, to the grid of the control tube.

The signal input applied to the synchro-guide control tube is a complex wave derived from three sources: (1) a sawtooth voltage from the horizontal blocking oscillator; (2) a feedback voltage from the horizontal output transformer; and (3) the sync pulse. Each of these signals passes through an attenuating network before they are combined to form the wave applied to the control-tube grid. Fig. 36-18 illustrates this process.

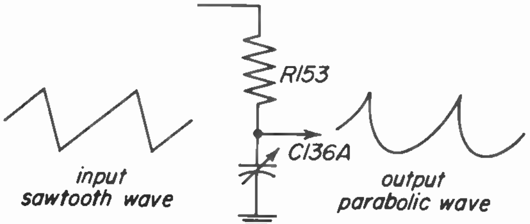

(a) waveform derived from the horizontal oscillator

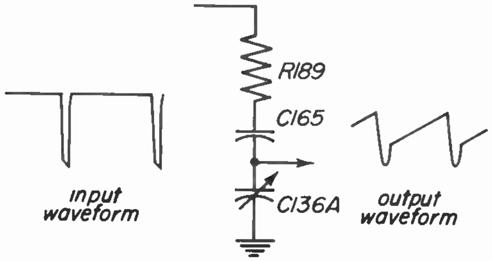

(b) waveform derived from the horizontal output transformer

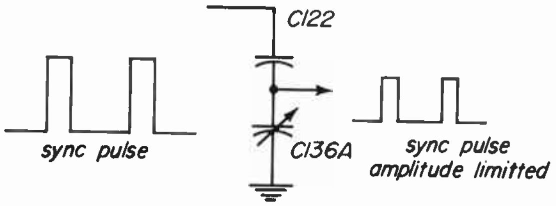

(c) sync pulse waveform with amplitude limited

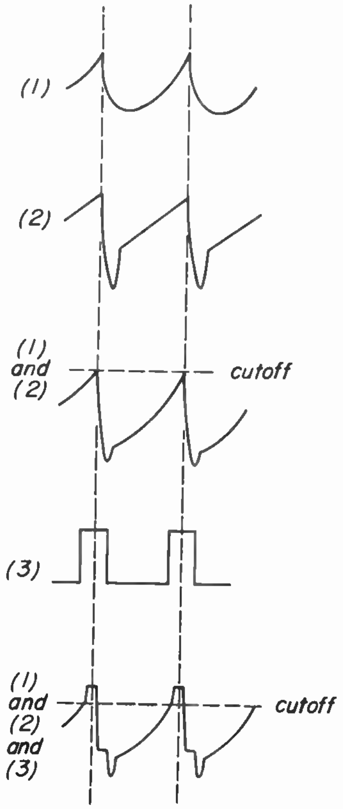

(d) composite waveform

Fig. 36-18

The sawtooth voltage from the horizontal oscillator is applied to the integrating circuit (R153 in series with C136A), with the output taken across the capacitor. When a square wave is applied to an integrating circuit, a sawtooth wave results. But when a sawtooth wave is applied to an integrating circuit, the output waveform appears as a parabolic wave, as shown in Fig. 36-18*a*.

The waveform obtained from the horizontal deflection system is in the form of a high-voltage negative pulse. This is fed through the network of R189, C165, and C136A, with the output again taken across the capacitor C136A. The pulse is partially integrated and attenuated to form the waveform shown in Fig. 36-18*b*.

The sync pulse passes through the capacitive voltage divider, C122 and C136A, where its amplitude is limited.

Note that C136A is common to all three input circuits. In the circuit diagram it is labeled Horizontal Locking Range Control. Varying this capacitance varies the amplitude of all three input signals, which together form the composite waveform applied to the grid of the control tube.

Now let us see how the composite waveform is developed, and why such a shape is desired. In Fig. 36-18*d* the parabolic waveform (1), derived from the horizontal oscillator voltage, and the waveform (2), derived from the horizontal output transformer voltage, are combined to form a composite wave. The parabolic waveform gives a steeper slope near the peak than is obtained with a sawtooth wave, while the addition of the partially integrated negative pulse results in a sharp downward slope immediately following the peak. The resultant waveform gives us a reference point, the peak, on which the position of the superimposed sync pulse (3) can be very accurately determined.

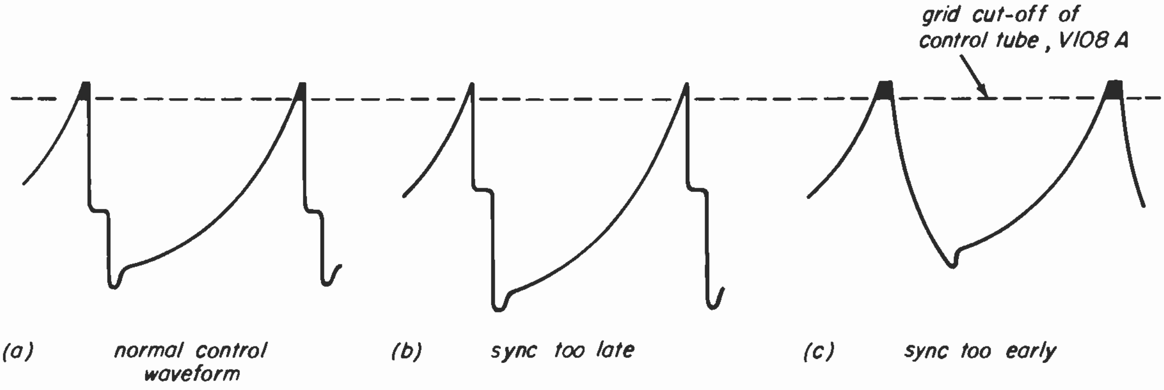

Fig. 36-19

Fig. 36-19 shows how accurately this system can serve to determine phase deviation between horizontal oscillator and sync pulse. When the two are phased correctly, the pulse falls at the tip of the peak of the composite wave in such a manner that about one-half of the pulse remains at the peak while the other half drops down the steep slope, Fig. 36-19*a*. When the sync pulse arrives too late, more of the pulse drops off the peak and slides down the steep side of the waveform *(b)*. When the sync pulse arrives too soon, more of the sync-pulse width remains atop the peak than normal *(c)*.

Operation of the Control Circuit -- A close examination of the waveforms of Fig. 36-19 shows that phase variation is indicated by the width of the peak of the composite input wave, which is sufficiently positive to drive the grid of the control tube above the cutoff value. When phase is properly adjusted, the tube conducts for a very short period, less than the time interval of a sync pulse. When the oscillator frequency is too high, so that the pulse arrives too late, the tube conduction time becomes less; when the oscillator frequency is too low, so that the sync pulse arrives too soon, the tube conduction time becomes greater.

This variation in conduction time of the control tube must be converted into a potential which can be used to make corresponding changes in the oscillator frequency, to bring it back into step with the sync pulse. During the periods in which the tube conducts, the current through the network in the cathode circuit, consisting of R158 and R164 in series shunted by C167 and C161 in series with R172, charges the capacitors to a d-c voltage proportional to the conduction time. The time constant of this network is sufficiently long to eliminate variations caused by noise or interference, but short enough to follow phase modulation in the transmitted sync signal.

The control voltage thus obtained is applied, through the voltage divider of R158 and R164, as a bias to the grid of the blocking oscillator. The variation in this bias voltage is sufficient to shift the oscillator frequency the required amount, and in the proper direction to pull it into phase with the sync pulse.

Stabilized Synchro-guide Circuit. -- Improvement of the synchro-guide circuit discussed above resulted in the development of the stabilized synchro-guide circuit. This circuit is shown in Fig. 36-20. The essential difference between this circuit and that of Fig. 36-17, aside from changes in circuit values, is the replacement of blocking-oscillator coil *L121* by a three-coil transformer, *T109*. The third coil of this transformer forms a stabilizing tuned circuit with capacitor C159.

This tuned circuit develops a sine wave which is added to both the plate and grid voltages of the blocking oscillator, in such phase that the slopes of these voltages are much steeper just ahead of the firing point. This considerably improves the frequency stability of the blocking oscillator. The difference in the oscillator and control voltage waveforms

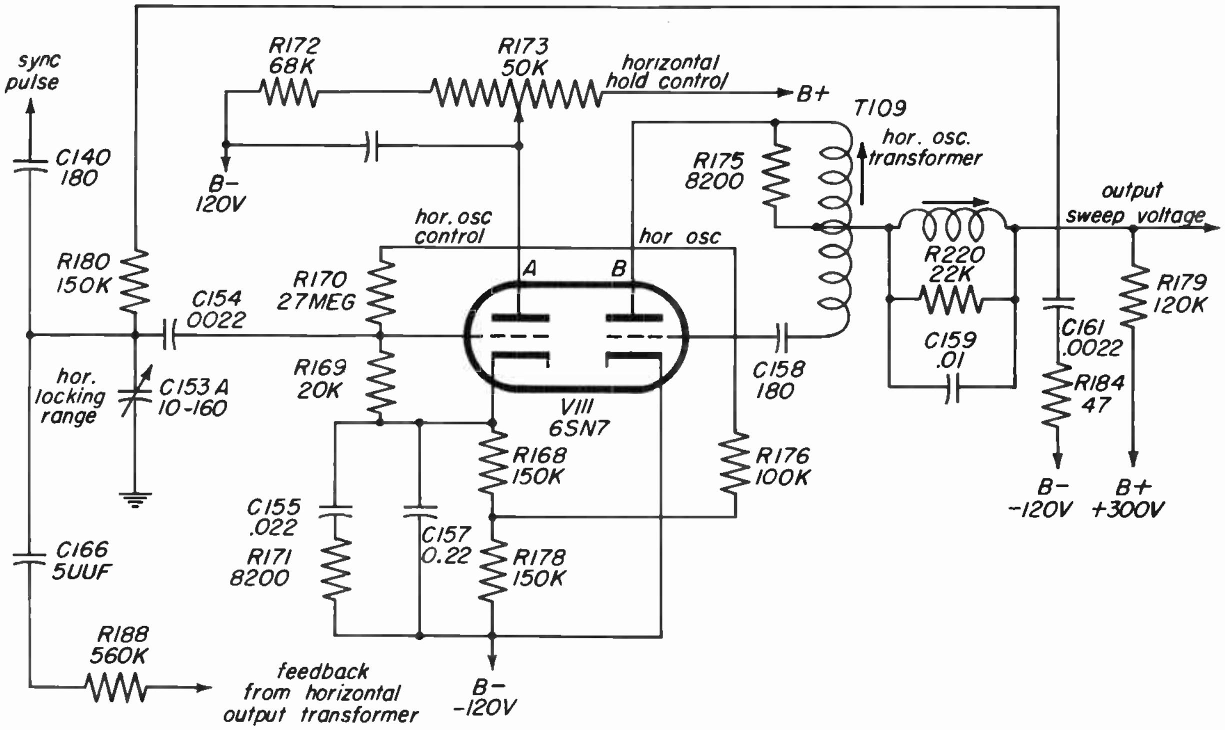

Fig. 36-20

is shown by the waveforms that are given in Fig. 36-21.

(a) waveform on grid of horizontal oscillator

(b) waveform on grid circuit of horizontal oscillator

(c) normal in-phase input to syncho-guide control tube

(d) normal in-phase input to synchro-guide control tube

(e) horizontal oscillator output-sawtooth voltage

(f) horizontal oscillator output sawtooth voltage

Fig. 36-21

The oscillator stability is improved so much that the Horizontal Frequency Control, C136C, can be eliminated and the pull-in range of the Hold Control can be reduced to a total range of only 3½ percent of the oscillator frequency instead of the 5 percent range provided for in the circuits of previous models. The Horizontal Hold Control, R173, adjusts the oscillator frequency within the above limits by varying the plate voltage applied to the control tube.

The synchro-guide AFC system has been called a width-modulation system, since control is dependent on the width of the sync pulse that remains on the peak of the composite wave applied to the control tube. The system may be considered more accurately as a variable area system, because the pulse amplitude could also affect the control. It is therefore essential that the amplitude of the pulses be limited by the sync separator before they are applied to the synchro-guide automatic frequency control circuit.

Another type of automatic sync control circuit is illustrated in Fig. 36-22. In this circuit, the phase discriminator compares the synchronizing pulses with the output of the sawtooth generator to produce a d-c control voltage that depends on the timing of the sync pulses with

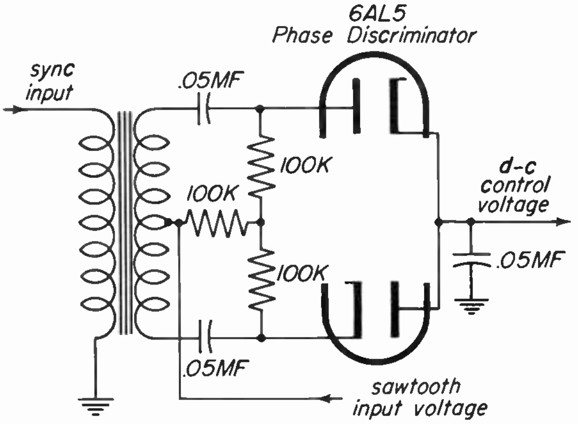

Fig. 36-22

respect to the sawtooth wave. Sync pulses of opposite polarity are coupled by the push-pull transformer. The d-c output voltage of the discriminator is filtered and applied to the grid of a multivibrator or blocking oscillator to correct its frequency by changing the d-c grid bias.

Although a transformer is shown in Fig. 36-22 to obtain push-pull sync pulses, a sync inverter stage can be used instead, as in audio amplifiers. Both diodes have the same size coupling condensers and load resistors so that with the same input the rectified output is the same. The two diodes are connected in series and the net output is filtered to provide the required control voltage.

◆

NOTES

NOTES

TELEVISION SERVICING COURSE

PREPARED BY

RCA INSTITUTES, INC.

A SERVICE OF *RADIO CORPORATION OF AMERICA*

HOME STUDY DEPARTMENT
350 West 4th St., New York 14, N. Y.

LESSON THIRTY SEVEN

PART I – DEFLECTION CIRCUITS

PART II – TROUBLESHOOTING DEFLECTION CIRCUITS

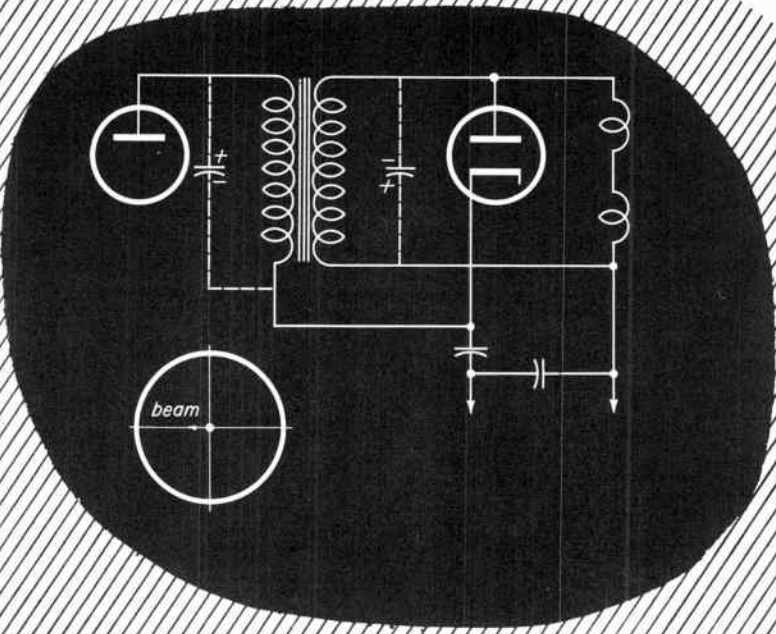

Lesson 37

PART I—DEFLECTION CIRCUITS

This lesson discusses the vertical deflection circuits, horizontal deflection circuits, and their controls. This is followed by troubleshooting procedures for typical deflection oscillator and output circuits.

VERTICAL DEFLECTION CIRCUITS

37-1. Modern television receivers usually combine the blocking oscillator and discharge tube in one tube. In the typical circuit of Fig. 37-1, the vertical-sweep oscillator and discharge tube are combined in a single triode.

This typical circuit combines the basic features of both the blocking oscillator and discharge tube circuits. Note condenser C157 and resistor R164 in series across the plate and cathode of the tube; this is the trapezoidal circuit previously described. The rest of the circuit is a blocking oscillator, similar to the one discussed in Lesson 36.

Condenser C145 is the grid-leak bias condenser for the blocking oscillator. It is also the coupling medium by means of which the vertical sync pulse is fed into the blocking-oscillator grid circuit. During the time the blocking-oscillator tube is cutoff by the bias due to C145, the sawtooth condenser C157 charges through R154, R155, and R156, to B plus and -120 volts, then through R164 and back to C157. During this charging portion of the cycle, the trace portion of the trapezoidal

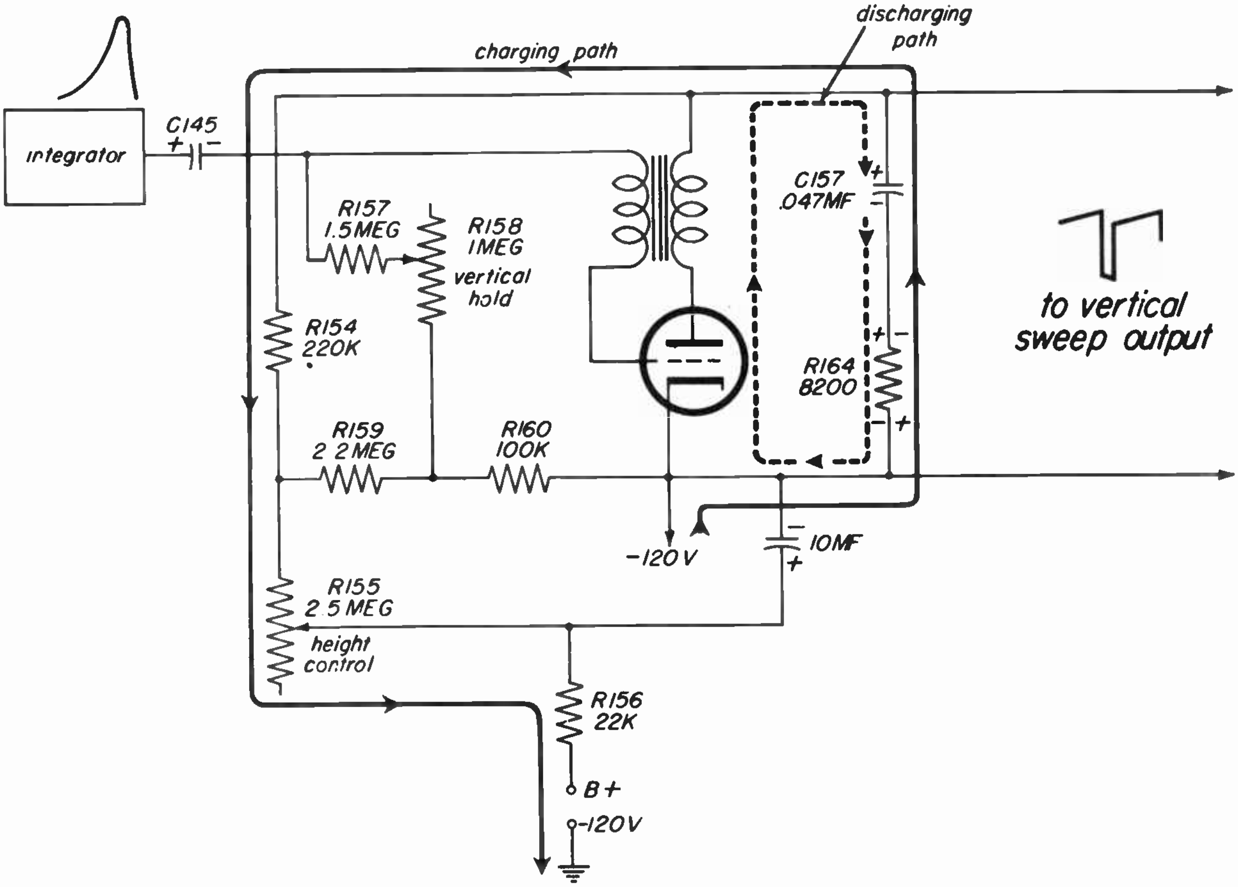

Fig. 37-1

wave is formed. The charging path is illustrated by the *solid* arrows in Fig. 37-1. After C145 discharges sufficiently, the blocking oscillator action forces the tube into conduction for a relatively short time. During this conduction period, the tube looks like a low resistance and causes C157 to discharge along the path of the dotted arrows. This forms the retrace portion of the trapezoidal wave.

The vertical hold control is R158. It changes the discharge time constant of C145 and thus controls the repetition frequency of the blocking oscillator (and trapezoidal wave) as previously described. The height control is in series with the charging path of C157, and therefore controls its time constant. This permits C157 to charge to greater or lesser values, controlling the amplitude of the output waveform and the height of the picture.

Vertical Sweep Output. -- After the trapezoidal wave is formed by the trapezoidal generator, it must be fed into an amplifier and then through a matching transformer to the vertical-deflection coils. The schematic diagram of the vertical output circuits is shown in Fig. 37-2.

The trapezoidal wave is fed into the grid of the vertical output tube. This is a 6K6 pentode used as a triode by connecting the plate and screen grid together. Connected as a triode, the tube has much less plate resistance than a pentode. Its plate resistance may be in the order of 1,000 to 2,000 ohms. This low plate resistance is important because it provides *damping* for oscillations which tend to occur in the vertical transformer and deflection coils during the vertical retrace. Further damping is provided by the two 560-ohm resistors, R166 and R167, across the vertical-deflection coils.

Vertical Linearity Control. -- A linearity control is provided in the cathode circuit of the vertical output tube. This varies the bias on the tube and shifts the point at which the grid waveshape appears on the tube characteristic curve. How this controls linearity can be seen with the aid of Fig. 37-3.

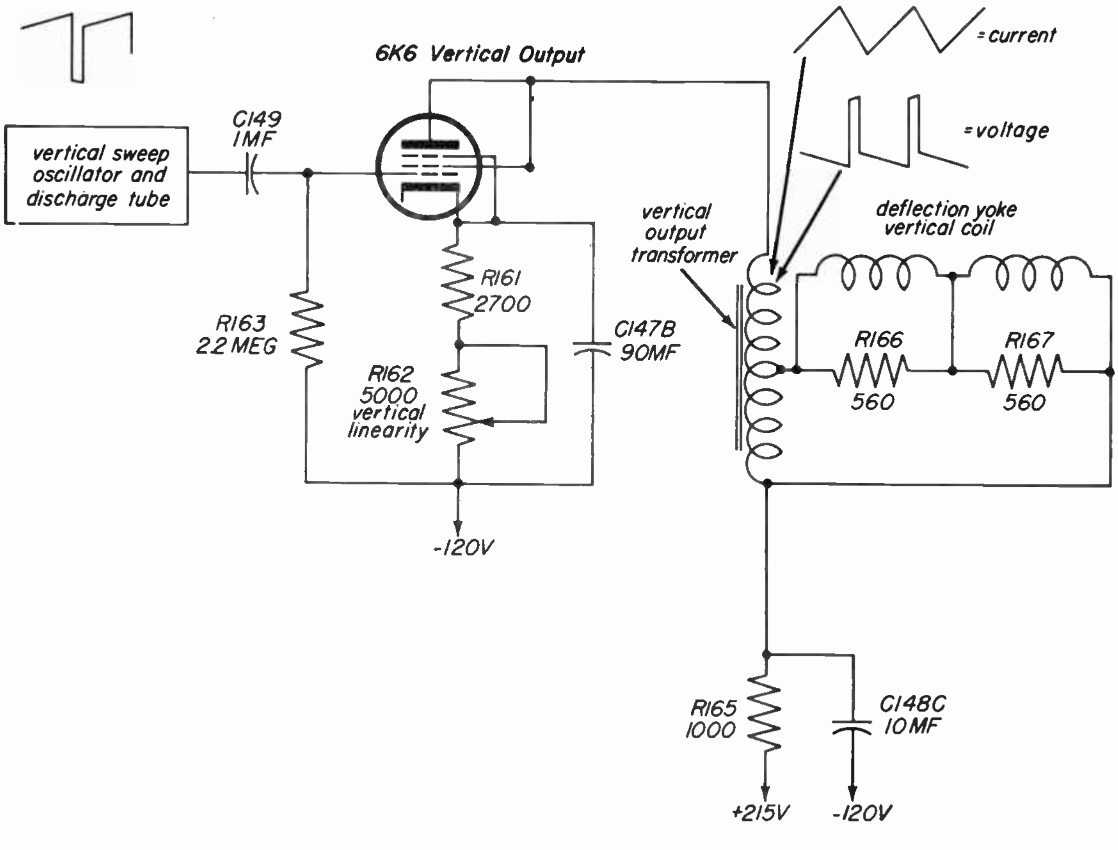

Fig. 37-2

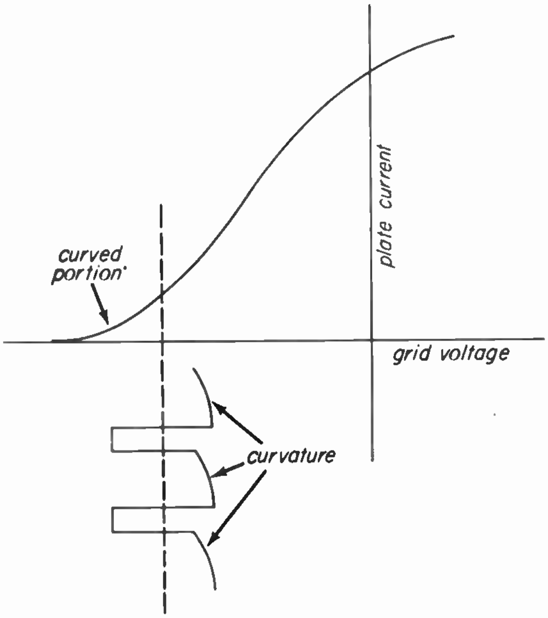

Fig. 37-3

Assume that the sawtooth portion of the trapezoidal input tends to bend over on top. If not corrected, this would cause vertical non-linearity with stretching at the top of the picture and crowding at the bottom. By lining up the curved portion of the sawtooth with a similar but opposite curve of the tube's operating characteristic, the sawtooth curvature can be effectively balanced out. The input wave can be shifted with respect to the characteristic curvature of the tube by changing the bias. This is accomplished in this circuit by varying the cathode resistance.

A trapezoidal waveshape of voltage appears across the vertical output transformer and deflection coils, and causes a sawtooth current to flow. The transformer is necessary since the impedance of the deflection coils is less than the output impedance of the tube, and they must be matched for proper tube operation. The transformer used is called an "autotransformer", since it has only *one* winding, which is tapped for impedance matching. This type is similar in characteristics to a two-winding transformer and is simpler to manufacture.

Two-Stage Vertical Oscillator. -- In some later model receivers, a new type of vertical sweep generator is used. This does away with the need for a separate blocking oscillator transformer. A schematic diagram of this system is shown in Fig. 37-4.

This circuit operates in the same way as a blocking oscillator, except that feedback energy in the correct phase is provided by the action of another tube (the pentode 6AQ5) instead of the blocking-oscillator transformer. The primary of the vertical-sweep output transformer acts in the same way as the grid winding of an ordinary blocking-oscillator transformer. C179 provides grid-leak bias, and the free-running frequency of the oscillator is determined *mainly* by C179, R148, and R149.

Assume that the grid of V109 has just been driven below cutoff, and is held there by the charge in C179. The trapezoidal generator consisting of C141 and R155 is charging up in the positive direction through R152, R153, and R154. This

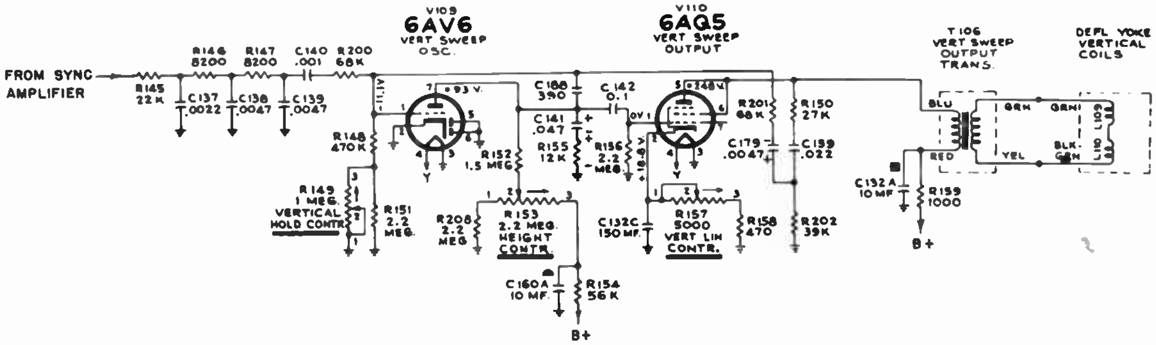

Fig. 37-4

is forming the trace portion of the trapezoidal wave which is amplified by V110 and passed into the vertical-deflection yoke coils through the output transformer T106. As the trace is completed the bias in C179 has decreased enough to permit V109 to begin conducting. C141 now begins to discharge rapidly through R155 and V109. This results in the formation of the negative pulse portion (retrace) of the trapezoidal wave. This negative pulse is amplified by V110 and appears as a positive pulse across the primary of T106, the vertical-sweep output transformer. A portion of the pulse is tapped off between C159 and R202 and fed back to the grid of V109. This reinforces the tendency of the circuit to oscillate, since V109 is already conducting in the positive direction. This results in a large positive pulse being developed at the grid of V109, recharging the grid-leak condenser C179. At the same time, the positive pulse across the primary of T106 is causing the vertical retrace due to the effect of the deflection coils.

Because of the resonance effects of the primary of T106 and the characteristics of the two tubes, the positive pulse on the grid of V109 will cut it off. The tube will not conduct again for some time because of the low Q of T106 (as in the original blocking oscillator). Thus the oscillator has characteristics of operation similar to those of an ordinary blocking oscillator. Synchronization is accomplished as described before, and the height and linearity controls also function the same.

HORIZONTAL DEFLECTION CIRCUITS

37-2. -- Three types of horizontal-deflection circuits have been used in television receivers. The automatic-frequency-control circuits used with horizontal deflection were discussed in Lesson 36. A schematic diagram of one common type of horizontal deflection system is shown in Fig. 37-5.

This horizontal-deflection system has some important features in its operation First, it utilizes energy which was previously lost to provide part of each scanning line. This permits a saving in the size of the power supply and provides greater efficiency for the horizontal scanning system. Second, it provides high-voltage pulses at the rate of 15,750 per second. These pulses when rectified provide the high accelerating potential (9,000 to 12,000 volts) for the second anode of the kinescope, eliminating the need for a separate high-voltage supply.

Sweep Generator. -- The horizontal-sweep oscillator is a sine-wave oscillator, as described in a previous lesson. Due to the manner in which the oscillator tube is operated, the waveshape at the plate of the oscillator tube is squared off as shown at the left in the figure. This squared wave is passed through a "differentiating" or "peaking" network, C176 and R202, which produces a *peaked* wave with positive and negative "pips", as shown. The peak-to-peak amplitude of this wave is about 100 volts. The posi-

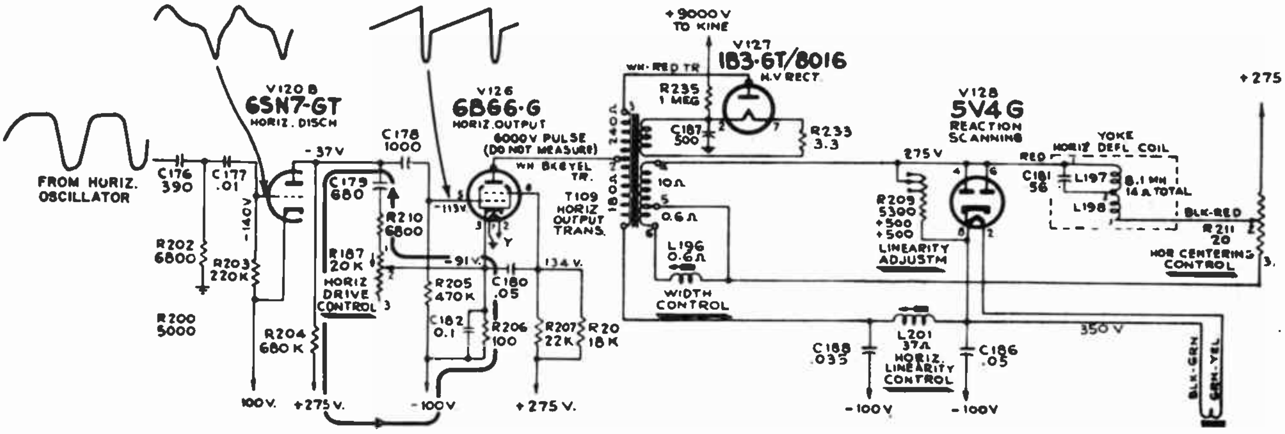

Fig. 37-5

tive pip produces a grid-leak bias of about 40 volts on the grid of V120B. Due to the large time constant of C177 and R203, the bias is maintained practically constant between positive pips. This means that V120B conducts only for a short period of each horizontal cycle (during the positive pip), and is cut off for the remainder of the horizontal cycle.

When V120B (the horizontal-discharge tube) is cut off, condenser C179 charges in the positive direction through R204, +275 volts (power supply), and R187, as shown by the arrows. The developed waveshape is trapezoidal because of the action of R187 and C179. When the positive pip arrives, V120B conducts heavily and C179 discharges rapidly through R210, R187, and V120B. This discharge produces the sharp negative pulse portion of the trapezoidal wave.

In this deflection system, the trapezoidal wave does not have exactly the same function as it did in the vertical circuits. Here, a trapezoidal wave is required because a very sharp negative pulse is needed to cut off the 6BG6-G (V126) at the end of the scanning line. The magnitude of the negative part of the trapezoidal wave can be controlled by the horizontal drive control, R187. How this control affects the picture will be explained later. The trapezoidal wave with adjustable negative pulse is fed into the grid of the 6BG6-G horizontal output stage.

The Output Circuit. -- The plate of the 6BG6-G feeds into a special horizontal output transformer. We will now discuss the operation of this special horizontal-deflection circuit, disregarding for the moment the high-voltage rectifier and concentrating on the scanning function. An enlarged drawing of the waveshape input to the 6BG6-G is shown in Fig. 37-6.

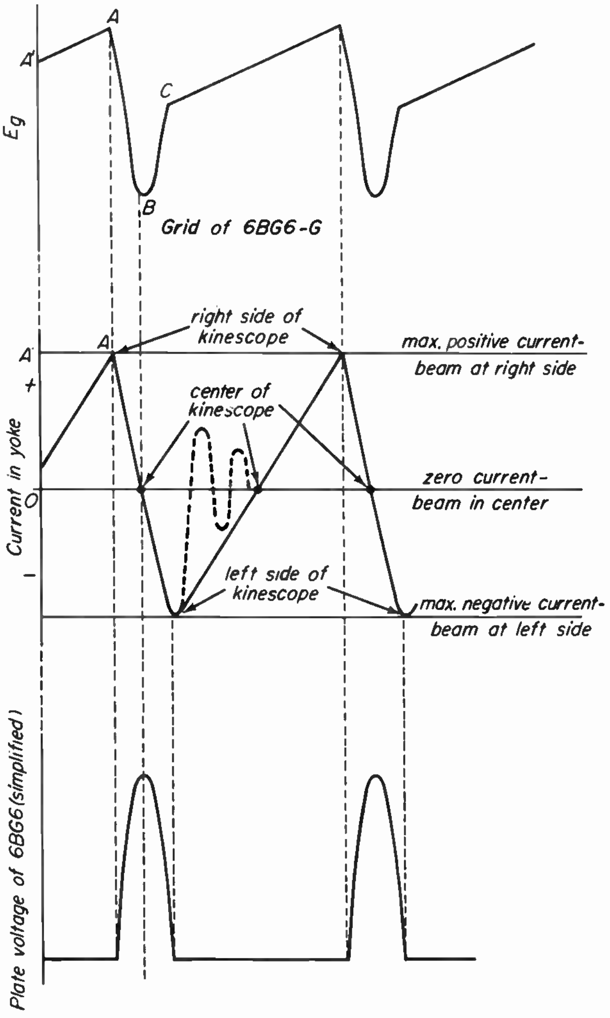

Fig. 37-6

The section from A′ to A represents the rise of the sawtooth portion to its maximum positive value at the grid, which in turn causes the maximum current to pass through the output tube, output transformer, and horizontal-deflection coils. The direction of currents is shown in the simplified drawing of Fig. 37-7.

The tube current, which is now increasing, causes the primary of the output transformer to become negative at the top with respect to the bottom. This in turn induces a voltage of opposite polarity in the secondary. Note the direction of the currents in the primary and secondary at this time, and that the current in the yoke is flowing up. This causes the beam to move to the right, and at point A (maximum value) the beam is forced to the extreme right side of the kinescope to complete the scanning of one line. Now, let us sum up the operating conditions at point A.

1. Current in primary is maximum and is flowing *down*.

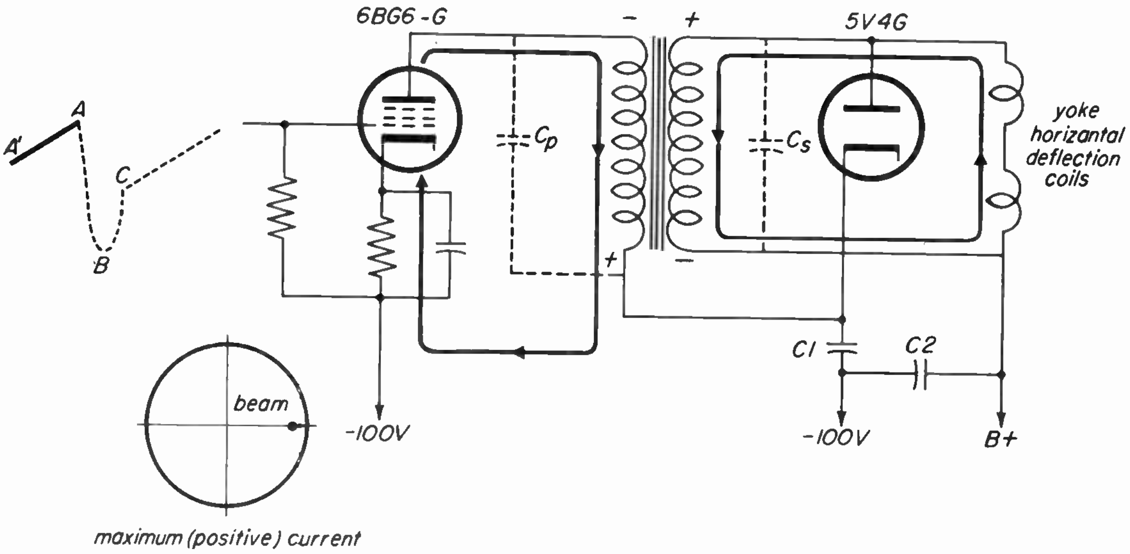

Fig. 37-7

2. Current in secondary is maximum and is flowing down.
3. Current in yoke coils is flowing *up* and is maximum (positive direction).
4. Beam is deflected all the way to the right.

The output transformer is of a special design and is self-resonant at about 71 kc. This resonant frequency is related to the desired *retrace* time, as will be seen.

The Retrace. -- At point A on the input waveshape, the 6BG6-G is suddenly cut off by the negative pulse. Cutting off the tube suddenly leaves the transformer with a great deal of stored energy in its magnetic field and it now tries to oscillate at its resonant frequency. Current in both the primary and secondary continues to flow in the *same* direction as before, but at a decreasing rate. The direction of current cannot change, since an inductance tends to resist any change of current. However, the magnitude of current is *decreasing*, since the oscillatory action is charging up the energy capacitance of the transformer. This is shown in Fig. 37-8.

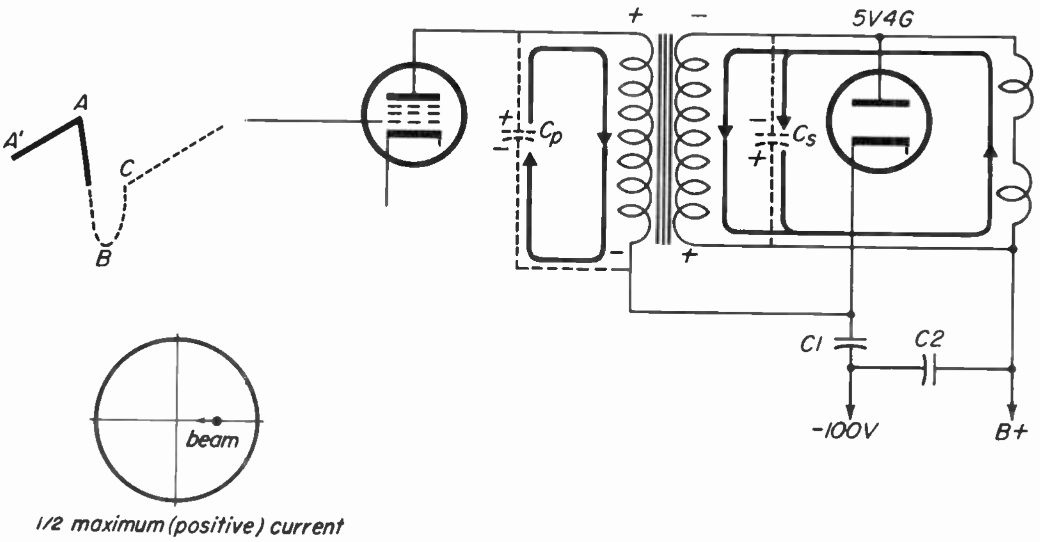

Fig. 37-8

Notice the reversal of polarity of the horizontal output transformer, caused by the magnetic field which is now collapsing instead of expanding. The potential at the plate of the output tube is now positive. It is during this time (horizontal retrace) that the high-voltage pulse for the kinescope is produced (Fig. 37-6*b*). Fig. 37-8 shows the circuit when the current has decreased to one-half its maximum value in the transformer and yoke coils. This decrease of current permits the beam to return halfway to the center of the kinescope. (The exact manner in which this is accomplished will be described in following lessons.) This is the first portion of the horizontal retrace; its timing is determined by the resonant frequency of the horizontal output transformer and yoke.

Let us progress a step further, as shown in Fig. 37-9.

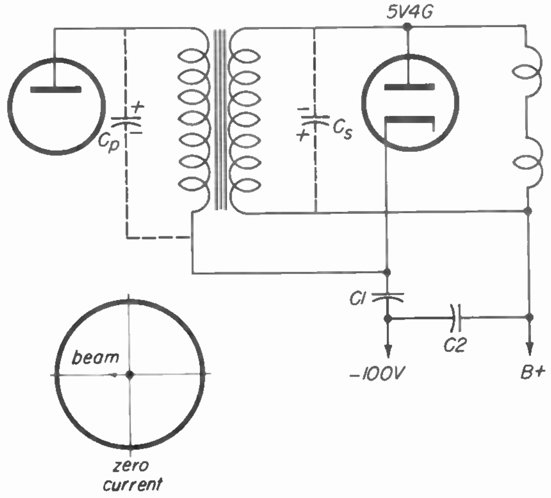

Fig. 37-9

The current has now decreased to *zero*, but the voltage across the capacities C_p and C_s is *maximum*, meaning that the maximum value of the kinescope high-voltage pulse is developed at this point. Compare this figure with Fig. 37-6*b* and note that zero current in the deflection yoke corresponds to maximum voltage at the 6BG6-G plate.

It can be seen in Figs. 37-8, 37-9, and 37-10 that during the retrace time, the plate of the reaction scanning tube (5V4G) is *negative*; it is not conducting and provides no damping for the deflection circuits. Therefore we can disregard this tube during retrace time.

Fig. 37-10 shows the circuit as the beam starts to move toward the left of center.

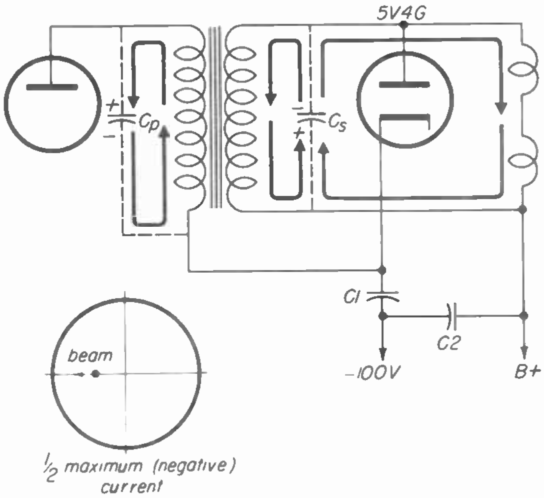

Fig. 37-10

The stray capacities of C_p and C_s, having reached their maximum charge, are now discharging as shown, putting their energy back into the deflection system, but in a direction opposite to that at the start of the retrace. Let us call the current that now flows a "negative" current. This is meant to indicate a reversal of direction, since current, being a rate of flow, has no polarity. The reversed current also produces a reversal of magnetic fields in the deflection yoke and transformer. The reversed yoke field pushes the beam to the left of center.

The normal position of the electron beam is at the center of the kinescope, and it must be forced to either side by the magnetic deflection fields. Thus when the current (and magnetic field) is zero, the beam returns to center. When the current has a "positive" value, the beam is *right* of center, and when the current has a "negative" value the beam is *left* of center, for horizontal scanning.

The beam is now halfway between the center and the left edge of the kinescope, still traveling from right to left. The plate of the 5V4-G is still negative and the tube is not conducting. The last diagram of the "retrace" series, which shows the conditions for completing the retrace, is Fig. 37-11.

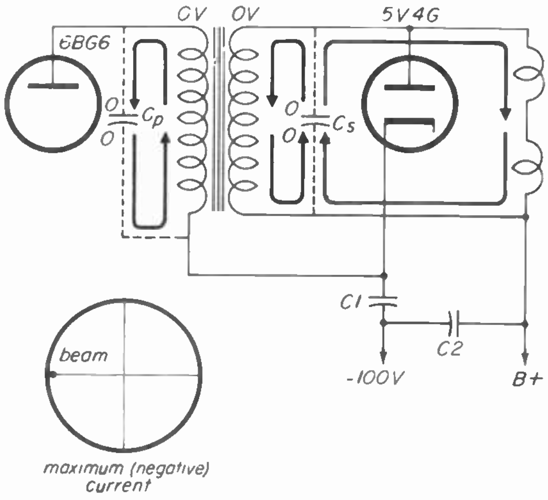

Fig. 37-11

The capacities C_p and C_s are discharged to zero, and current is maximum in the negative direction, forcing the beam to the extreme left of the kinescope screen. This concludes the retrace. Reference to Fig. 37-6*b* (yoke current) shows that the retrace time took precisely one-half of one cycle of free oscillation of the horizontal transformer and yoke.

Let us now see how much time this actually takes. To find the time of a complete cycle we use the following equation:

$$T=\frac{1}{F} \quad \text{or} \quad T=\frac{1}{71,000}$$

$$\doteq 14 \text{ microseconds (approximately)}$$

Therefore, one-half of a full cycle, or the *retrace* time, takes about 7 microseconds. Since the maximum allowable retrace time is about 10 microseconds, enough time is left over (about 3 microseconds) to allow for blanking both before and after retrace.

Damping. -- Before beginning the next horizontal trace, we must solve an important problem. At the end of the retrace, the horizontal output system is still in a condition of free oscillation. This oscillation must be halted almost instantaneously if linear deflection is to be provided during the early part of the trace. If the oscillation is not quickly stopped (damped), the left side of the picture will be badly distorted. We can stop the oscillation effectively by placing a simple damping tube across the deflection coils, as shown in Fig. 37-12.

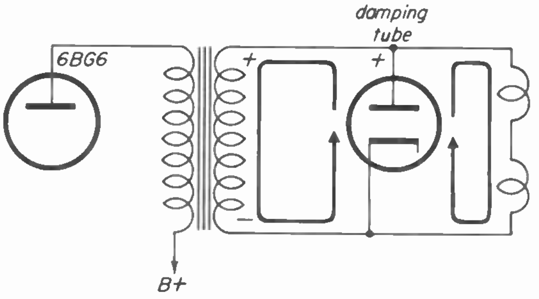

Fig. 37-12

In this simple system, when the oscillation voltage tries to swing positive, the diode conducts and quickly damps out oscillations. There are, however, several additional features of the operation. One of these is the fact that energy stored in the horizontal transformer and yoke during the previous trace is wasted, and the output tube and power supply must furnish all the energy required to scan a new line. This results in relatively poor efficiency for the horizontal-scanning system. To overcome this, the "reaction scanning" system was developed and incorporated into later receivers.

Reaction Scanning. -- This system or a modification of it has been used in many receivers. Reaction scanning provides damping of the oscillations with a large saving of stored energy in the horizontal system. The reaction-scanning action starts just after the conclusion of the retrace (Fig. 37-11). Note that a maximum value of current is flowing, the voltage across C_p and C_s is zero, and the beam is at the extreme left. Conditions in the horizontal output circuit a short time later are shown in Fig. 37-13.

The current continues to flow in the same direction, but its magnitude is now decreasing, lessening the strength of the magnetic field, and allowing the beam to start moving toward the right. At the same

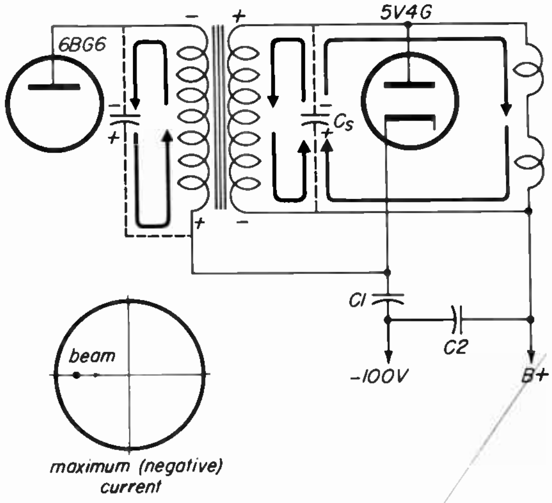

Fig. 37-13

time the reaction scanning tube (5V4G) begins to conduct, since the plate is now positive.

To avoid confusion, the conduction path of 5V4G is shown separately in Fig. 37-14.

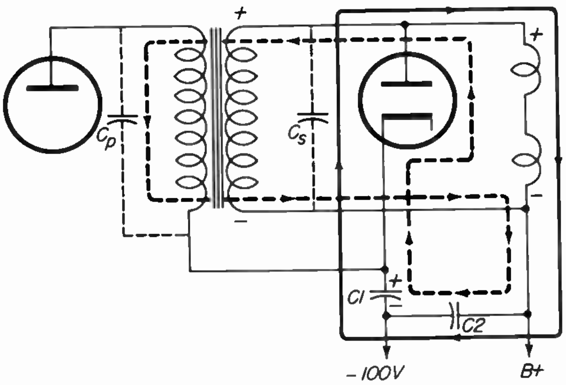

Fig. 37-14

The tube current flows through the yoke coils and transformer secondary, through C2 and C1. This effectively places the low resistance of the diode (5V4G) in shunt with these circuits and begins to damp out the natural tendency to oscillate. Remember that the beam is beginning to return to the right because of stored energy which is now being damped. The 6BG6-G horizontal-output tube is at this time practically non-conducting, and adds little or no energy to the sweep. The energy stored in the horizontal-output circuit is being used to provide part of the forward trace. This must be done linearly, however, so that the trace will not be distorted. This means that the damping of the oscillations must be linear at least until the 6BG6-G begins to supply an appreciable part of the scanning energy. Some idea of the relation between the energy supplied by storage in the coils and that supplied by the horizontal-output tube can be gained with the aid of Fig. 37-15.

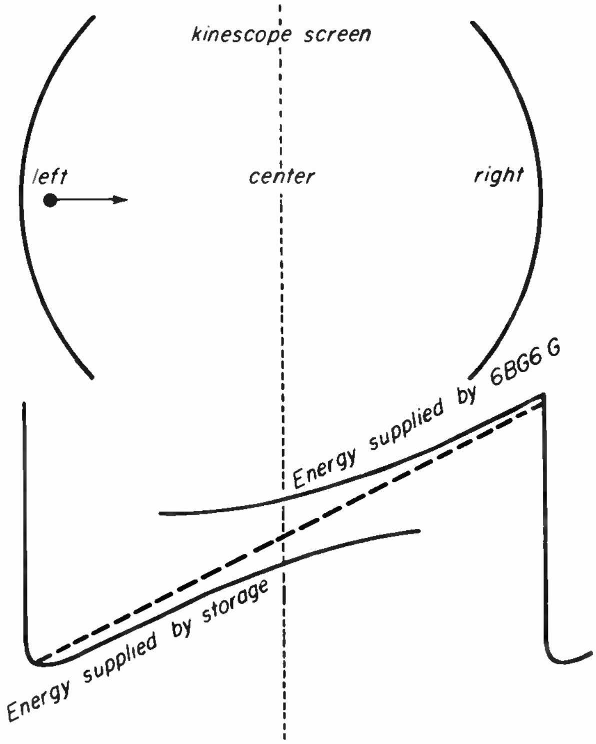

Fig. 37-15

Here we see that the first portion of the damped oscillation remains linear, and since this represents current in the deflection system, it provides linear deflection for the first portion of the forward trace (possibly one third or so). As the beam approaches the center of the screen, the damped oscillation is no longer linear and the beam would tend to slow down. However, the output tube now makes up for the deficiency, supplying enough energy to maintain linear deflection until the right side of the screen is reached.

B-Supply Boost. -- It can be seen from the preceding discussion that the energy stored during the latter part of the trace is not wasted, but is used to provide part of the forward sweep. This stored energy is also utilized in another manner. Refer to Fig. 37-14, which shows the conduction path of the 5V4-G reaction scanning tube. Note that this path passes through condensers C2 and C1. We may disregard C2 since it is so large (120 MF in power supply) that no voltage change occurs across its terminals. However, C1 is relatively small (.05 MF), and its voltage rises appreciably. Look at Fig. 37-5 for a moment. C1 of Fig. 37-14 is actually C186 of Fig. 37-5. Note that 350 volts appears at the top of C186 although the supply voltage is only 275 volts. This means that C186 (or C1) charges to an additional 75 volts due to the conduction of the diode. This additional charge, and that of C188, which also charges through the diode, is applied to the plate circuit of the 6BG6-G and supplies a portion of the energy to operate this tube.

Thus we have two means of energy storage: in the magnetic fields of the transformer and yoke, and in condensers C186 and C188. Conservation of some of the scanning energy in this way increases the efficiency of the horizontal scanning system considerably. As can be seen in Fig. 37-15, the energy supplied from storage loses its linear characteristic after a time and becomes curved. This curvature is matched against an equal and opposite curvature of the horizontal-output tube characteristic, resulting in a linear sweep near the center of the screen as well as in the right and left portions.

High Voltage.– Figure 37-6 shows that the plate voltage of the 6BG6 becomes a positive pulse during the retrace time, with the maximum value occurring at the center of the retrace. This pulse attains a maximum value of about 6,000 volts at the plate; however, this is not high enough for application to the kinescope. Referring to Fig. 37-5 it can be seen that an additional step-up to about 9,000 volts is obtained by autotransformer action in the primary of the horizontal output transformer. These large voltage pulses have a very high repetition rate (15,750 per second), and so require relatively little filtering as compared to a 60-cycle supply.

As can be seen in Fig. 37-5, after rectification by the 1B3-GT the high voltage is filtered by a 500-MMF condenser, a 1-megohm resistor, and a second 500-MMF condenser which is not shown in the diagram. This second condenser is actually part of the kinescope, comprising the inner and outer Aquadag coatings separated by the dielectric of the glass tube. This type of high-voltage supply and filter has poor regulation and supplies only a small amount of current. This is satisfactory to operate the kinescope and also makes the supply much safer to handle than a 60-cycle high-voltage power supply. The 1B3-GT is a special rectifier tube with a very high inverse-peak voltage rating (40,000 volts) and a low filament-current rating of 200 milliamperes. Filament power is supplied by a separate secondary winding on the horizontal-output transformer, eliminating the need for a separate, expensive and bulky filament transformer.

HORIZONTAL DEFLECTION CONTROLS

37-3. The following controls and adjustments are present in the horizontal-sweep circuits:

a. Horizontal Drive Control
b. Width Control
c. Horizontal Linearity Control
d. Horizontal Centering Control
e. Horizontal Linearity Adjustment

Horizontal Drive Control. -- This is shown in Fig. 37-5 as R187. It is a 20,000-ohm variable resistor in series with a 6800-ohm fixed resistor (R210) in the plate circuit of V120B. These two in turn are in series with sawtooth condenser C179. These resistors are "peaking" resistors which help produce the trapezoidal wave. Varying R187 has little effect on the sawtooth portion of the wave, but a considerable effect on the negative pulse portion. This effect is illustrated in Fig. 37-16.

When the drive control is in its minimum position, a relatively small negative pulse is produced. The average value of the wave is rather high (Fig. 37-16*a*) and the sawtooth portion does not drive very

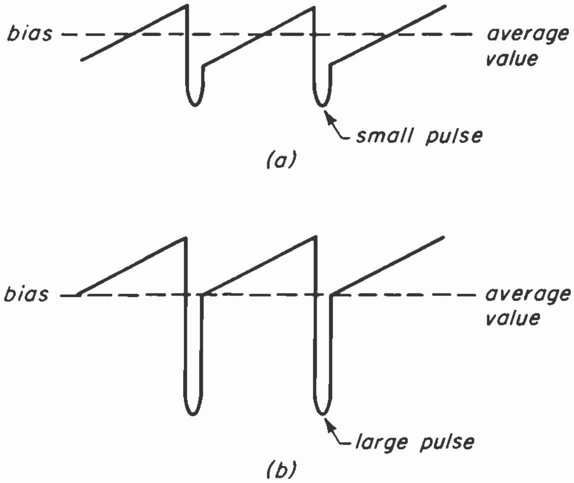

Fig. 37-16

high above the bias in the positive direction on the grid of the output tube. This limits the maximum current supplied to the yoke; thus the amount of horizontal deflection with this setting of the horizontal control is less than that at higher settings. Also, with this setting, the kinescope high voltage is low, since there is less energy storage in the yoke.

When the drive control is advanced to its maximum position, the magnitude of the negative pulse is greatly increased, as shown in Fig. 37-16*b*. The sawtooth portion of the wave has about the same amplitude as before. The larger negative pulse now causes the average value of the wave to drop, so that the sawtooth portion drives higher in the positive direction than previously. This increases the scanning width and the high voltage. The maximum setting, however, can seldom be used since it causes crowding on the right side of the picture. The drive control is usually reduced from maximum until a *linear* horizontal deflection is obtained.

Width Control. -- The width control is a variable inductance (L196) connected across a portion of the secondary winding of the output transformer. This is shown in Fig. 37-5. When two inductances are placed in parallel, the total inductance is less than the original value. By changing the value of the variable inductance, the inductance of the entire secondary can be varied within certain limits. Varying the inductance of the secondary changes its induced voltage, and thus varies the current available to drive the yoke. If the inductance of L196 is made small, the inductance of the secondary is minimum and so is the yoke current, giving minimum width. When the inductance of L196 is maximum, the secondary inductance is also maximum, as is the yoke current, and maximum width is obtained. Thus varying L196 offers a convenient means of controlling the scanning width.

Horizontal Linearity Control. -- This variable inductor is shown in Fig. 37-5 as L201. The control is in effect a phase-shifting device which shifts the phase of the voltage that is developed across condensers C186 and C188 by the conduction of the 5V4G. Since this voltage is applied to the plate of the horizontal-output tube through a portion of the horizontal-output transformer primary, shifting its phase causes slight changes in the operation of the 6BG6-G (V126) and thus provides small changes in horizontal linearity. Rotating the adjustment counterclockwise causes the second quarter of the picture to stretch slightly and the first quarter to crowd. This control can be adjusted only slightly, major linearity adjustments being made by the horizontal drive control, explained at the beginning of this section.

Horizontal Centering Control. -- Horizontal centering is provided by sending a direct current of variable magnitude through the horizontal-deflection coils. As shown on the right of the schematic of Fig. 37-5, the horizontal centering control (R211) is a 20-ohm potentiometer. The top of the control goes to +275 volts; the bottom to +280 volts. The movable arm of the potentiometer goes to one side of the yoke coils while the bottom terminal (+280 volts) goes to the other side of the yoke coils by way of the width control (L196) and the secondary of the horizontal-output transformer.

The method of obtaining horizontal centering in this receiver circuit is a trifle unusual, and should be considered in detail. Assume that the movable arm of the centering control is at the very bottom, or at position 3. In this position, the centering control cannot supply any direct current to the yoke, and it might seem that the beam (or picture) would not be influenced by centering current. However, this is not the case. When the centering control is in this position, maximum centering current is being supplied from another source, and the picture is moved a maximum amount off center in one direction. The path of the centering current from this second source is shown in Fig. 37-17.

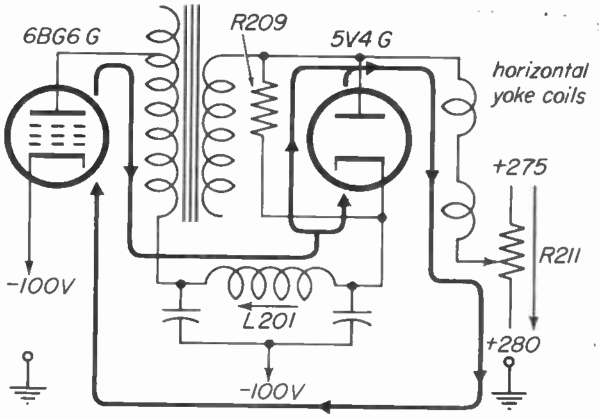

Fig. 37-17

Tracing the centering current, we find that it goes through the 6BG6-G, then down through the primary of the horizontal-output transformer, through the linearity inductance (L201), and to the damping tube, where it splits between the tube and the linearity resistor (R209). From this point the current recombines and travels *down* through the yoke coils and back to +280 volts. This current, which is the *average* or direct current from the 6BG6-G, causes the picture to be moved to one side horizontally.

Now assume that the horizontal centering control is set to its other extreme; that is, the movable tap goes to the top of the potentiometer at +275 volts. The conditions now existing are shown in Fig. 37-18.

Due to the 5-volt potential difference across R211, a current now flows through the horizontal yoke coils in a direction opposite to that of the previous example. This is actually the resultant of *two* currents, since the current described in connection with Fig. 37-17, still exists but is overcome by a greater current in the opposite direction from R211. This new current, since it flows in the opposite direction, causes the picture to be moved horizontally toward the opposite side of the screen.

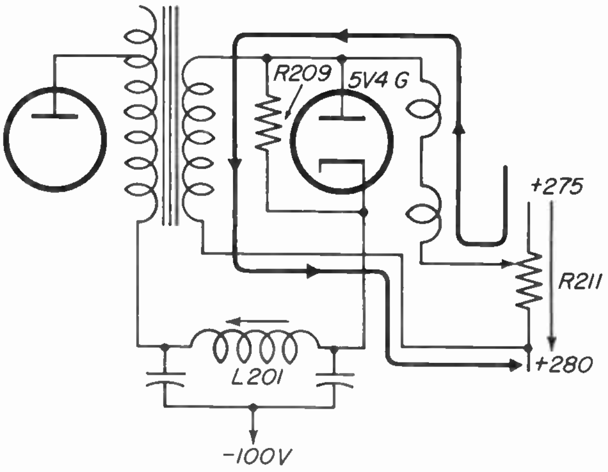

Fig. 37-18

Now, if the movable arm is placed at the *center* of the control, the resultant direct current through the yoke coils is zero. This is true because the two currents previously discussed are now equal and opposite, and cancel out. With a zero direct current through the deflection coils, the picture will be near the center of the screen. Thus, varying the magnitude and direction of the direct current through the horizontal yoke coils provides horizontal centering for the picture.

Mechanical Centering. -- In later receivers, electrical centering controls are not used. Instead the picture is centered by moving the focus magnet on the kinescope. Moving the magnet vertically shifts the picture horizontally, and moving the magnet horizontally shifts the picture vertically. The focus magnet can be moved by centering screws. In newer sets, the focus magnet has a separate centering plate that affects the focusing field. Instead of the focus magnet being moved, a lever arm on the centering plate is moved, vertically for horizontal centering, and horizontally for vertical centering. After the picture is centered, the focus control and the ion-trap magnet must be readjusted.

Linearity Adjustment. -- The linearity adjustment is a resistor with three taps, connected in parallel with the 5V4G; it is labelled R209 in Fig. 37-5. The resistance of the unit to the lowest tap is 5,300 ohms and may be increased by two steps of 500 ohms each. The resistor is inserted to compensate for manufacturing variations in the yoke and output transformer. Since it is in parallel with the 5V4G tube, it has an effect on the rate of damping and so affects to some extent the linearity of the left side of the picture. This adjustment is set at the factory and usually does not have to be reset. However, if proper horizontal linearity cannot be obtained by adjusting the drive, width, or linearity controls, it may be necessary to move the tap on the linearity resistor. This resistor is located inside the high-voltage compartment, and the high-voltage shield must be removed to reach it.

Electronic Magnifier. -- Certain television receivers are equipped with "Electronic Magnifier" deflection circuits. This circuit enlarges the center portion of the picture sufficiently to fill the entire screen, giving the effect of a "close-up" view. The Electronic Magnifier effect is controlled by a remotely operated switch, which may be located at any convenient viewing point. A schematic of this system is shown in Fig. 37-19.

A relay (K101) is controlled by the remote switch (S106) to provide normal or expanded picture viewing. The relay as shown is in the normal viewing position. Operation of the circuit can be seen more clearly in the simplified diagrams of Fig. 37-20.

In the horizontal circuit, shown in *a*, it can be seen that the shunt and series width controls are in the circuit. These are adjusted to provide normal picture width. The series width coil core should not be out too far, otherwise the picture

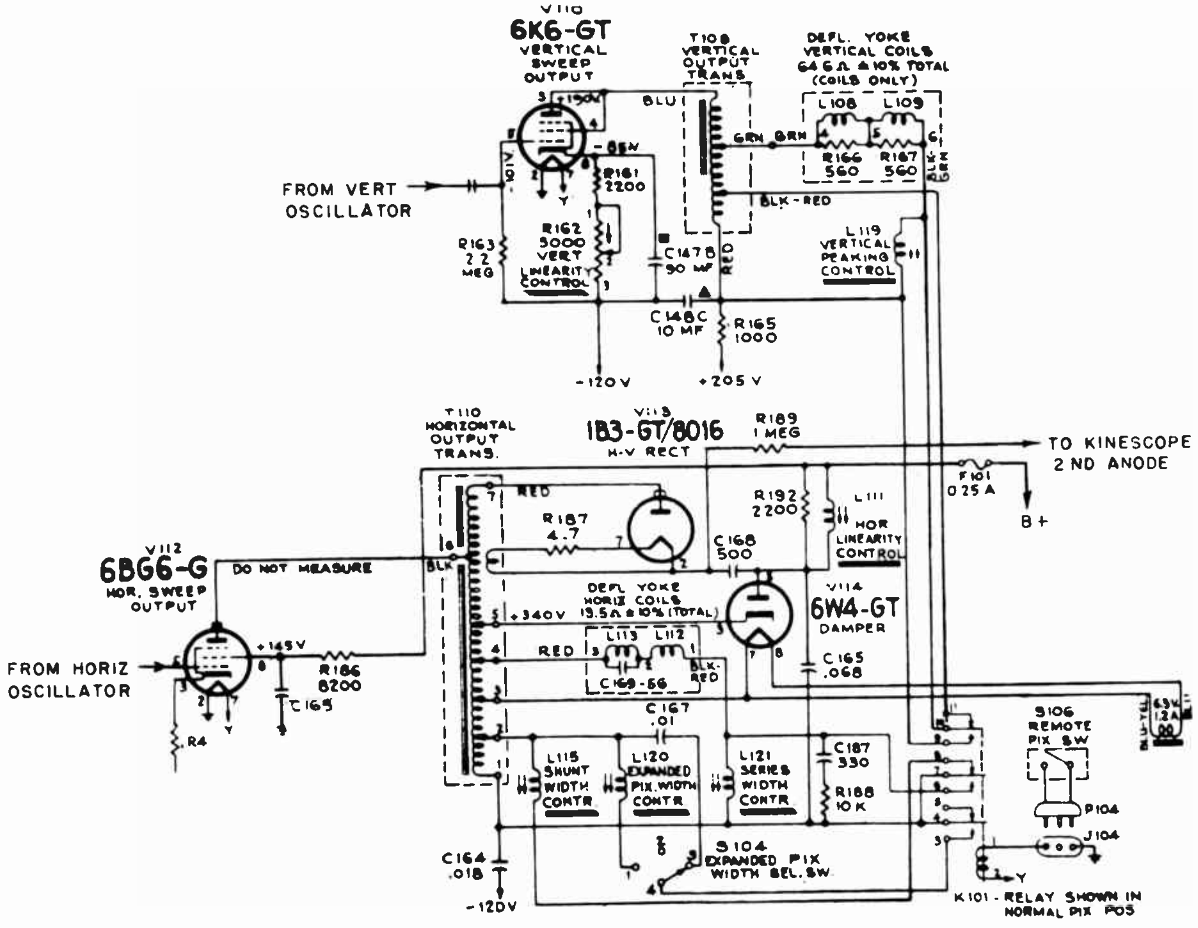

Fig. 37-19

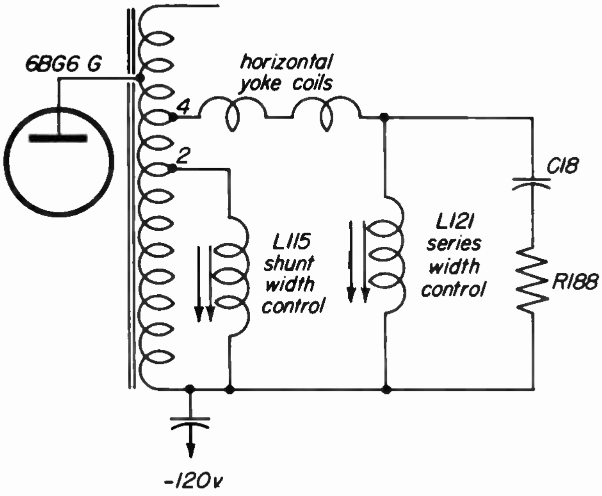

(a) horizontal circuits

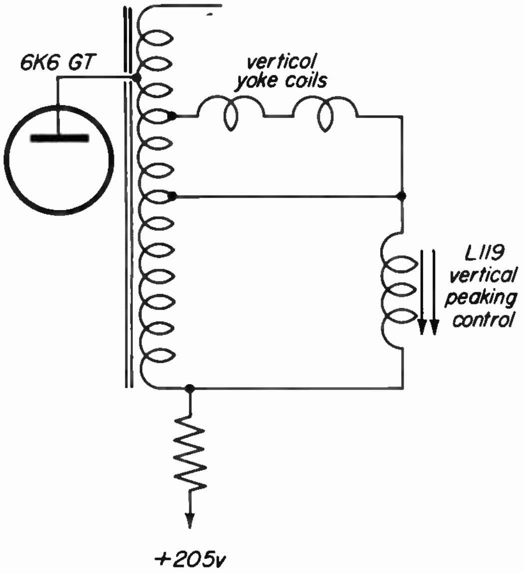

(b) vertical circuits

Fig. 37-20

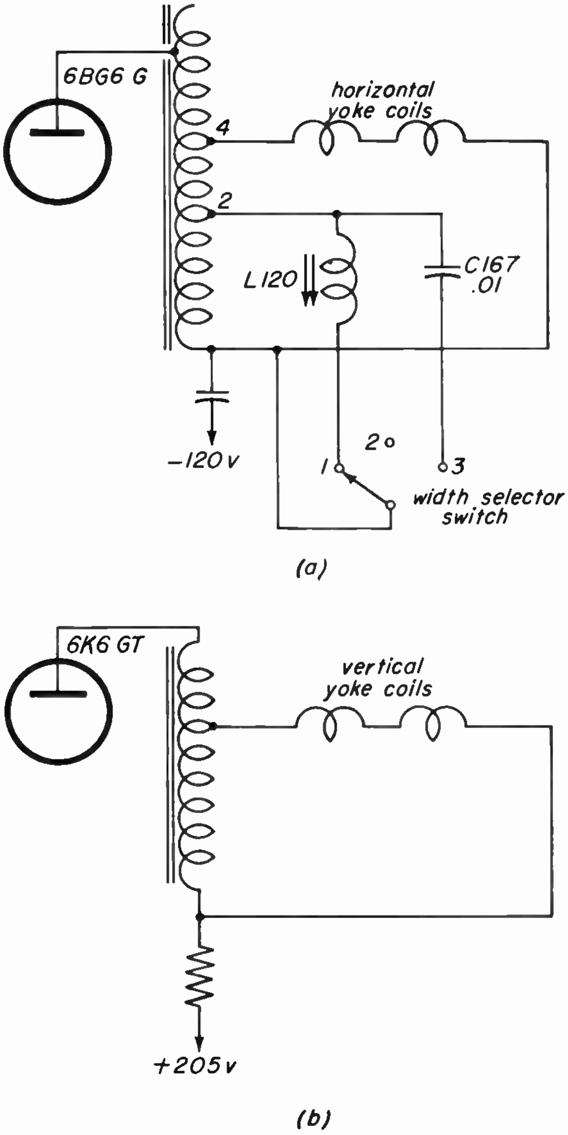

Fig. 37-21

will "ring" (oscillate) on the left half. In *b* of the figure, the vertical yoke coils are across the two taps of the vertical output transformer. The vertical peaking control aids in obtaining good vertical linearity in the top one-half inch of the picture. Vertical height and linearity are adjusted by the conventional controls.

Expanding the Width. -- Now let us see how the currents change with the switch and relay in the *expanded* position. In Fig. 37-21*a* neither L115 nor L121 are in the circuit. They have been replaced by L120 (the expanded-picture width control), C167, and the 3-position width-selector switch. The selector switch in position 1 places L120 across the bottom part of the transformer. In position 2, L120 is cut out of the circuit, while in position 3, C167 is substituted for L120. This provides progressively greater widths (going from 1 to 3) and if sufficient width is not obtained in position 1 by adjusting L120, position 2 or 3 may be used instead. In the expanded picture the larger outer circle of the test pattern, which is normally tangent to the top and bottom of the picture, is tangent to the *sides* of the picture (mask).

Expanding the Height. -- As can be seen in *b* of Fig. 37-21, the vertical peaking control is removed in the expanded position and the yoke placed across a greater portion of the vertical output transformer. No adjustment is necessary here, since the height is automatically increased the proper amount.

Thus, by virtue of the expanded sweeps in both the horizontal and vertical directions, it is possible to enlarge the center portion of the picture. Since important action seldom occurs near the outside edges, the expanded position can frequently be used to provide a more satisfactory view.

COMMERCIAL HORIZONTAL DEFLECTION CIRCUITS

37-4. The horizontal deflection systems in some receivers differ in several respects from the one just discussed. In general, these changes are:

1. Different horizontal AFC system and oscillator.
2. Different type of drive control
3. Different type of horizontal output transformer and damping arrangement.

In some receivers, a different type of horizontal AFC system is used: the "stabilized synchroguide" which was discussed in Lesson 36. The horizontal sweep oscillator is of the blocking-oscillator type which was discussed in detail in the previous lesson. A schematic diagram of this horizontal-deflection system is shown in Fig. 37-22.

Sweep Oscillator. -- There is no separate discharge tube, since the blocking oscillator also performs this function, as was the case in the vertical-deflection system previously discussed. The sawtooth condenser is C161. No trapezoidal wave is formed in this system. R184, which appears directly below C161, is the cathode resistor for the 6BG6-G, and not a peaking resistor, as it might first appear. Note that the sawtooth wave formed across C161 is applied between the grid and cathode of the output tube, and is the only signal driving this tube.

Drive Control. -- The drive-control system used here differs considerably from that used in the previous circuit. This is a capacitor voltage-divider arrangement consisting of the fixed coupling condenser C160 and the variable-drive control condenser C153B.

Let us examine the capacitor voltage divider. In a previous lesson, we found that two resistors could be made to form a voltage-divider network for direct current. In such a case, the applied voltage divides in proportion to the value of the resistances, the larger voltage appearing across the greater value of resistance. Much the same effect can be produced by using condensers as a voltage divider for alternating current. In this case, the a-c

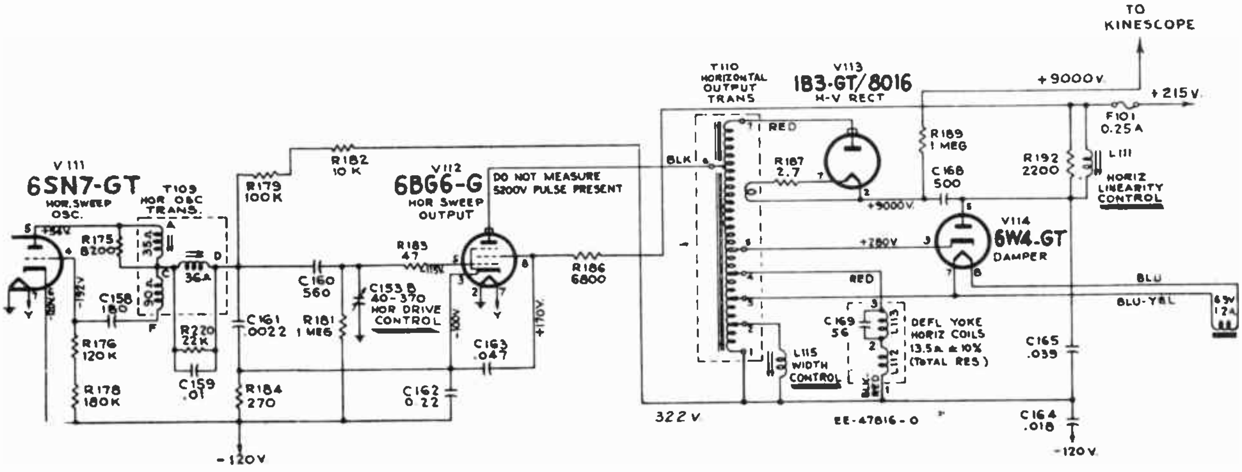

Fig. 37-22

voltage divides in proportion to the amount of the reactances. An example is shown in Fig. 37-23.

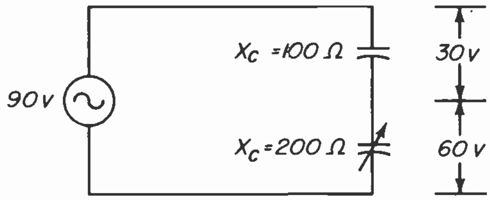

Fig. 37-23

Here we have an a-c generator with an output of 90 volts. Connected across the generator is a capacitor voltage divider, one condenser having a reactance of 100 ohms and the other a reactance of 200 ohms. The a-c voltage divides across the two condensers in proportion to their reactances, 60 volts appearing across the larger reactance and 30 volts across the smaller reactance.

Remember that the reactance of a condenser is *inversely* proportional to its capacity; that is, the smaller a condenser, the larger its reactance. In Fig. 37-23, the bottom condenser might be variable. Thus, *decreasing* its capacity (*increasing* its reactance) would change the voltage-divider ratio so that more voltage would appear across the bottom condenser and less across the top. The opposite is also true. Increasing the capacity of the bottom condenser *decreases* its reactance and the voltage drops across it.

Returning to Fig. 37-22, C160 corresponds to the top condenser and C153B corresponds to the bottom condenser. Varying C153B adjusts the amount of sawtooth wave appearing across it. Since this is the actual signal fed into the grid of the 6BG6-G, C153B acts as a horizontal drive control by controlling the amplitude of the grid signal. The effect of the drive control upon the set operation is similar to that of the drive control in the previous case.

In the control-grid circuit of the 6BG6-G a 47-ohm resistor (R183) is connected in series with the grid. This resistor, which did not appear in early receivers, was inserted to reduce the effects of spurious oscillations which tend to appear in the grid circuit. These oscillations and their effect on the picture will be discussed in detail later.

The Output Circuit. -- The basic functioning of the horizontal output-tube transformer, damping, and high-voltage supply are the same as in early types. However, certain points of difference should be considered. As can be seen in Fig. 37-22, the output transformer is of the autotransformer type. This type is both simpler and more efficient than those with separate primary and secondary windings. The path of conduction of the damper tube is drawn in simplified form in Fig. 37-24.

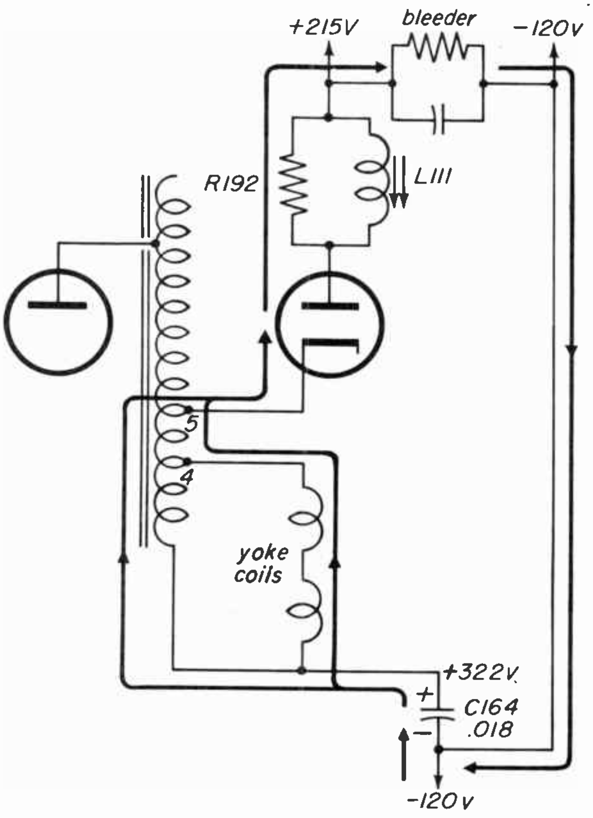

Fig. 37-24

Starting at the damper (6W4-GT) the conduction path can be traced through the linearity control L111 and R192, through the power supply to -120, and into C164. This condenser stores energy for the output tube by charging up to about +322 volts. This action also took place in the earlier system. The linearity control, L111, is in series with the damper current and also functions in a manner similar to that of the earlier system. The horizontal deflection coils are tapped into terminals 1 and 4 of the autotransformer. This provides the proper impedance match between the yoke and the output tube for maximum transfer of power and efficient operation.

Notice, however, that the damper cathode is connected to terminal 5, while its plate is effectively connected to terminal 1 through the power supply and C164. Thus, it is not only across the yoke coils, but across an additional part of the autotransformer as well. This provides more effective damping of the entire transformer. The filament of the damper tube is not tied to the cathode as it was in the older circuit, but is tapped down on the transformer. As a result, it is possible to reduce the necessary insulation of the filament winding supplying the 6W4-GT. This is accomplished as follows. During the retrace time, the top of the transformer is highly positive with respect to the bottom. Proceeding toward the bottom of the transformer, the positive potential decreases progressively. Thus the filament of the damper is less positive than its cathode by several hundred volts, which decreases the strain on the filament winding insulation. This is made possible by the characteristics of the heater-to-cathode insulation of the damper. The tube is so designed that with the cathode more positive than the heater, it will safely withstand a potential difference of 450 volts for a pulse period of not more than 10 microseconds. Actually the pulse (during flyback) is only about 7 microseconds, so the tube is operating below its rated conditions.

High Voltage. -- Another point of interest is the low potential connection of the high-voltage filter condenser, C168. This is the right side of the condenser in Fig. 37-22; instead of going to ground, it is connected to the B plus supply (215 volts). This adds 215 volts to the high-voltage source, since the high- and low-voltage supplies are thus connected in series.

DIRECT-DRIVE HORIZONTAL OUTPUT CIRCUIT

37-5. Later receivers use a slightly different arrangement in the output circuit of the horizontal sweep output tube. The schematic is shown in Fig. 37-25.

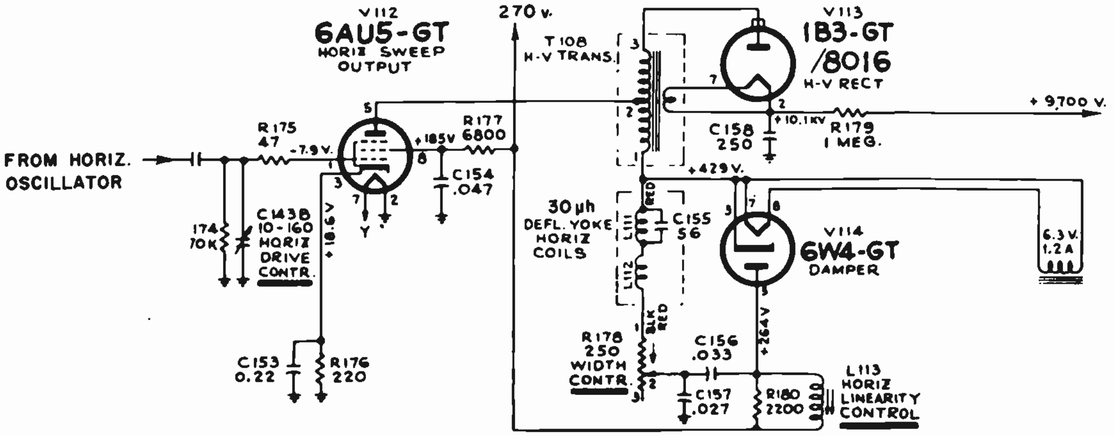

Fig. 37-25

The horizontal output tube is a 6AU5-GT, which is much smaller both in physical dimensions and current ratings than the one (6BG6-G) previously used. This tube used in conjunction with a new yoke makes for more efficiency and economy in the horizontal output sweep system.

The horizontal yoke is no longer tapped into an autotransformer, but is in series with a separate high-voltage transformer. The new yoke has considerably more inductance than older types, and therefore requires less current for the same deflection. In comparing the two types of yokes the older type (horizontal) is found to have an inductance of about 8 millihenrys; the new type, an inductance of about 30 millihenrys, or nearly four times as much. The portion of the high-voltage transformer connected in series with the plate of the 6AU5 has an inductance of about 28.5 millihenrys, and the remainder about 102 millihenrys.

The high-voltage transformer is tapped into a point where it will help provide the correct impedance match for the 6AU5 and at the same time limit the high voltage at its plate. The maximum positive pulse rating at the plate of the 6AU5 is 5,000 volts, and it is usually wise to remain below this value for trouble-free operation.

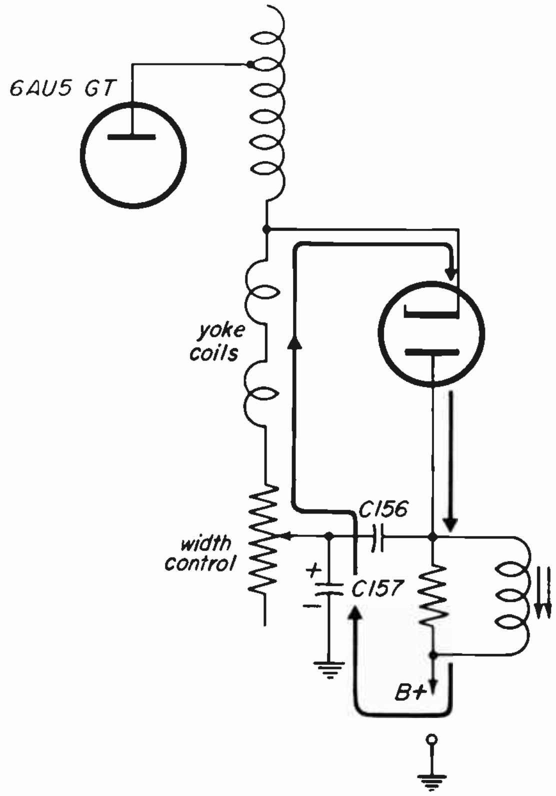

Fig. 37-26

The width control is a variable resistor (R178) in series with both the 6AU5 and the damper tube, thus controlling the value of current and, in turn, the sweep width.

The path of damping tube current is shown in Fig. 37-26.

Note that the damper current passes through C157, raising its potential to about 429 volts to provide energy storage for use by the plate circuit of the 6AU5 and several other tubes. The horizontal linearity control acts the same as in previously-discussed circuits.

PART II – TROUBLESHOOTING DEFLECTION CIRCUITS

TROUBLES AND TESTS

37.6 As in other parts of the receiver, one of the greatest aids to troubleshooting the deflection circuits is the presence or absence of a picture on the kinescope. By analyzing the various conditions on the kinescope screen, we can reduce considerably the time required to troubleshoot the receiver. A clear understanding of how the circuits work helps considerably in doing this. Since all indications of trouble begin with the appearance of the picture (if any) on the kinescope, we will consider specific kinescope pictures, then track down the trouble just as would be done in actual practice.

Blank Screen. -- Suppose a set has a completely blank kinescope – no raster, no spot. After eliminating the obvious possibilities, such as checking to be sure that the set is plugged in and the power switch is on, the first step is to check for sound. If there is no sound, the trouble probably is in the low-voltage power supply. Since this unit is the subject of another lesson, we will assume that it is operating correctly and that we get normal sound. Therefore, we eliminate the low-voltage power supply as a source of trouble.

With no spot on the screen, several possibilities exist. The first element to check is the *fuse* (Fig. 37-19) in the B-plus line going to the horizontal-deflection circuits. This fuse, which has a rating of 1/4 ampere, is inserted to protect the receiver against faults which may occur in the deflection circuits. Remember that the fuse will only blow due to overloads in the *deflection circuits*. It is not affected by any other section of the receiver. However, fuses sometimes blow due to old age or temporary surges, and a blown fuse is therefore not a sure sign that something is wrong with the receiver. In many cases, simply replacing the fuse will restore the set to normal operation. Be sure to check the fuse before looking for other troubles.

Assume that the fuse is found to be normal. Now look into the neck of the kinescope to make sure that the filament is lit. (We must assume that the ion trap, focus coil, and deflection yoke are correctly positioned.) If the filament is lit, it can usually be assumed that the kinescope is all right; however, if there is any doubt, try a substitute tube. In most cases, the original kinescope is left in the customer's home and a different kinescope is used in the shop; thus if the set's kinescope *is* bad, it will become apparent when the receiver is set up in the shop.

Assuming that the kinescope is good (and it usually is), when there is no light on the face of the tube, we can be fairly sure it is caused by one of two reasons. One is excessive bias on the kinescope, which can be quickly checked with a voltmeter. The second and more common condition is a loss of kinescope high voltage. A quick check for high voltage can be made (as previously described) by attempting to draw an arc from the high-voltage connector. If no high voltage is present we must track down the cause. We will assume that the high-voltage circuits and rectifier are not at fault, since these will be treated in another lesson. Therefore, the loss of high voltage must be due to the fact that we are getting no drive through the horizontal-output transformer.

Check the Tubes. -- The first step in this case is to check the tubes which may affect the operation of the horizontal-sweep circuits. In one type of receiver (Fig. 37-5) the tubes which may be at fault are:

a. Horizontal Oscillator (not shown)
b. Horizontal Discharge
c. Horizontal Output
d. Reaction Scanning

The surest way to check these tubes is by substituting a new one. Tube checkers cannot always be relied upon.

In later sets (Fig. 37-14) the following tubes should be checked:

a. Horizontal Sweep Oscillator
b. Horizontal Sweep Output
c. Damper

If a defective tube is the only fault in the horizontal system, replacing it should restore the set to normal operation. Incidentally, a 6BG6-G tube that is "gassy" may keep blowing fuses as fast as they can be replaced; so if this trouble arises, be sure to check that tube first. The next step is to make voltage and resistance measurements.

Voltage and Resistance Checks. -- The voltages on the various tubes should be measured and checked against the service notes. Measurements should be made with a Volt-Ohmyst, if available, and should be within plus or minus 20 percent of the indicated values. Voltage readings radically different from those indicated in the service notes should be suspected, and their cause tracked down by resistance measurements.

If certain resistors are open or their values greatly increased, they may affect the entire horizontal-deflection system. For example, in Fig. 37-19, R4 is the cathode bias resistor for the 6BG6-G tube. If this is open or greatly increased in value, there will be little or no horizontal output. If the screen bypass condenser C163 should short, there will be no horizontal output. Either of these faulty components could be quickly located by voltage and resistance measurements. In making these measurements, remember the suggestions made in previous lessons, such as unhooking one side of a condenser, tapping a resistor, and so forth. All such measurements must be made accurately; otherwise they are valueless.

The horizontal output transformer and horizontal yoke can be checked for continuity with an ohmmeter. *Power must be off!* The readings should conform fairly closely to those given in the service notes. Variation should not be greater than about 10 percent or so. Sometimes, however, resistance readings are not given in service notes. Therefore, it is a good idea to become familiar with such values by checking them in a properly operating receiver. An open or shorted winding in these coils could cause a complete loss of high voltage. Frequently, open coils can be repaired, if the open ends are accessible. In the case of shorts, replacement is usually necessary because of the damage to insulation in the windings.

In some receivers, such as that shown in Fig. 37-5, an open-circuited horizontal linearity coil will cause a complete loss of picture illumination and scanning because the B plus line is opened. This may be easily detected by a continuity check with an ohmmeter. In some later receivers (Fig. 37-32), a shunting resistor is across the linearity control, so even if it should open, the receiver may still operate to some extent.

HORIZONTAL DEFLECTION TROUBLES

37-7. Not all troubles in the horizontal deflection system result in a complete loss of brightness. Other conditions can cause a distorted raster or unwanted lines appearing on the kinescope. Some of the conditions are caused by oscillations in the horizontal system. We may divide such oscillations into two categories: (a) those caused by incomplete damping, and (b) "Barkhausen" oscillations.

The effects of incomplete damping may show up on the kinescope as a fold-over of the raster, most severe at the left side, or as a series of white, vertical lines. These photographs illustrate the two conditions.

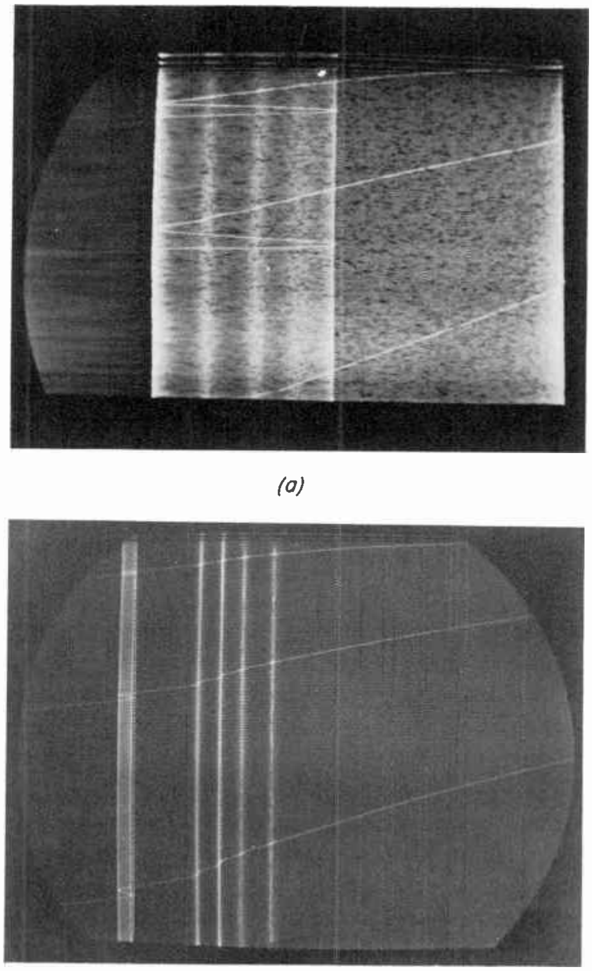

Fig. 37-27

In both of these pictures of the horizontal output circuit oscillations, it is possible to determine the section of the horizontal system causing the trouble simply by looking at the kinescope raster.

Defective Damping. -- A very wide vertical bar such as is shown in Fig. 37-27*a* is caused by some radical failure of the damping circuit; thus the cause must be on the *output* side of the horizontal output tube. This wide bar is caused by large amplitude oscillations of horizontal yoke current. A photograph of an oscillogram of yoke current taken under these conditions is shown in Fig. 37-28.

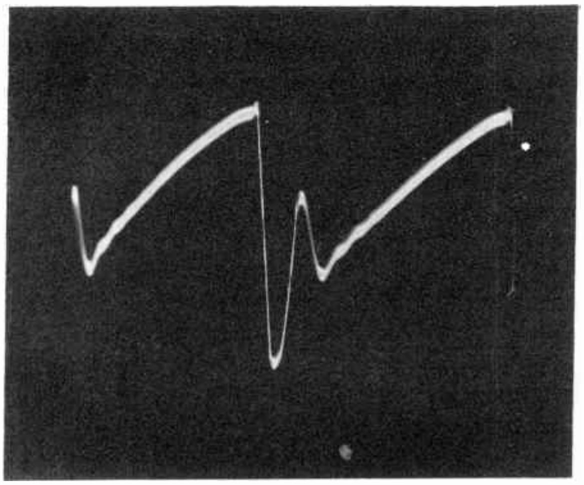

Fig. 37-28

Notice the large amplitude swing due to lack of damping. This oscillation causes the beam to go forward, come backward and go forward again, traversing the area *three times* and producing a highly intensified section at the left side. This oscillation of the beam at the left side can be clearly seen in Fig. 37-27*a*. Note that the vertical retrace lines go through a complete cycle of oscillation, thus intensifying the left side of the screen. Although difficult to see, there are also several *narrow* white vertical bars inside the wide bar. These are caused by the low amplitude oscillations, which do not swing the beam horizontally as much. The wide vertical bar in this case was caused by an open B-boost condenser, such as C186 in Fig. 37-5. A similar effect could be caused by a defective damping tube. Remember, when a very *wide* bar appears at the left side of the raster, look for trouble in the output circuit of the horizontal output tube.

Excessive Drive. -- The thin white vertical bars (there may be as many as 5 or more) near the left side of the picture in Fig. 37-27*b* are also caused by insufficient damping. However, this is the fault of *too much drive* at the grid of the horizontal output tube, not of any defect in the damping system. There is simply too much oscillation produced for the damper to remove completely. A photograph of an oscillogram of yoke current taken when 5 narrow white vertical bars were present is shown in Fig. 37-29.

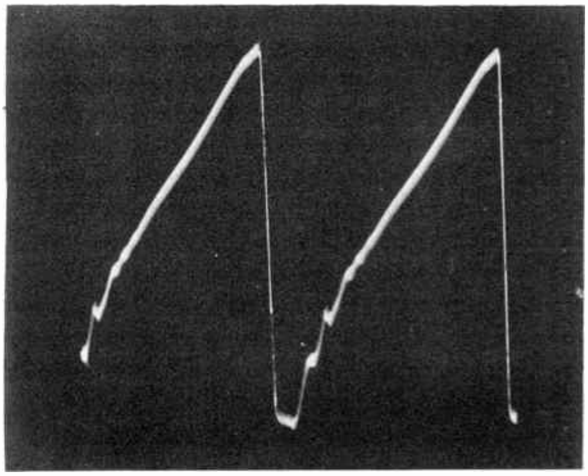

Fig. 37-29

Note that for each white bar seen on the kinescope, there is one oscillation. These decrease in amplitude as horizontal scanning progresses, and thus are rarely present in the right side of the raster. An enlarged view of a section (lower left) of Fig. 37-27*b* is shown here:

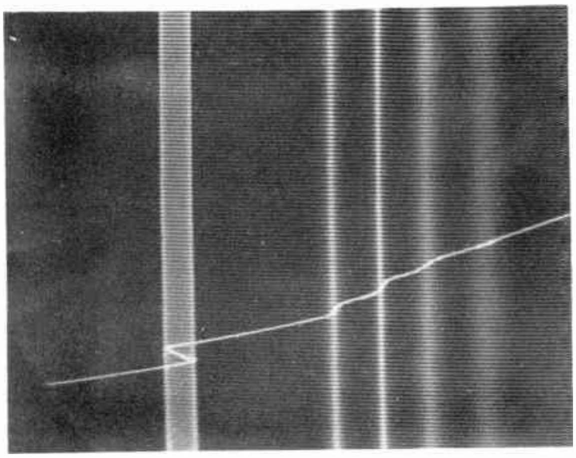

Fig. 37-30

Note the oscillation of the vertical line. The amplitude of oscillations is less here than in the previous example, since the damper is working normally. As stated above, this condition is caused by *overdrive* of the horizontal output tube. One way in which overdrive may be produced is by a decrease in value of the sawtooth condenser charging resistor. As an example, look at Fig. 37-22, in which R179, the charging resistor for C161, has a normal value of 100,000 ohms. If this value decreases, the sawtooth amplitude will increase, and if the charge is large enough, overdrive of the 6BG6-G will be produced, resulting in *narrow*, white, vertical bars on the kinescope. The smaller R179 becomes, the more bars will appear. An increase of R179 above its normal value will *not* cause this condition, but may cause a loss of brightness, since in this case the drive will be reduced. A reduced value of C161 could also cause the narrow bars to appear.

Once again, try first to localize the trouble to one section of the receiver, then look for specific defective components. In this case, as in others, a quick look at the raster indicates where to start looking for trouble. In dealing with this type of difficulty in the horizontal deflection system, it should be remembered that later receivers use high-impedance yokes, and that with these yokes it is normal to find faint, wide, vertical bars in the absence of picture. When the picture appears, these cannot be seen. Since the bars do not interfere with picture quality, and cannot be easily removed, they should ordinarily be disregarded. However, if such bars become a source of interference in the picture, their effects must be reduced.

Barkhausen Oscillations. -- These oscillations are entirely different from the horizontal oscillations previously described. They usually appear in the form of one or more black, vertical lines on the left side of the raster. The lines may vary in number and appearance from one channel to another, and may also be affected by different brightness levels. Barkhausen oscillations are usually more obvious on the high-frequency channels, and at low brightness levels. A photograph of very strong Barkhausen oscillations is shown in Fig. 37-31, with an oscillogram of the grid of the kinescope.

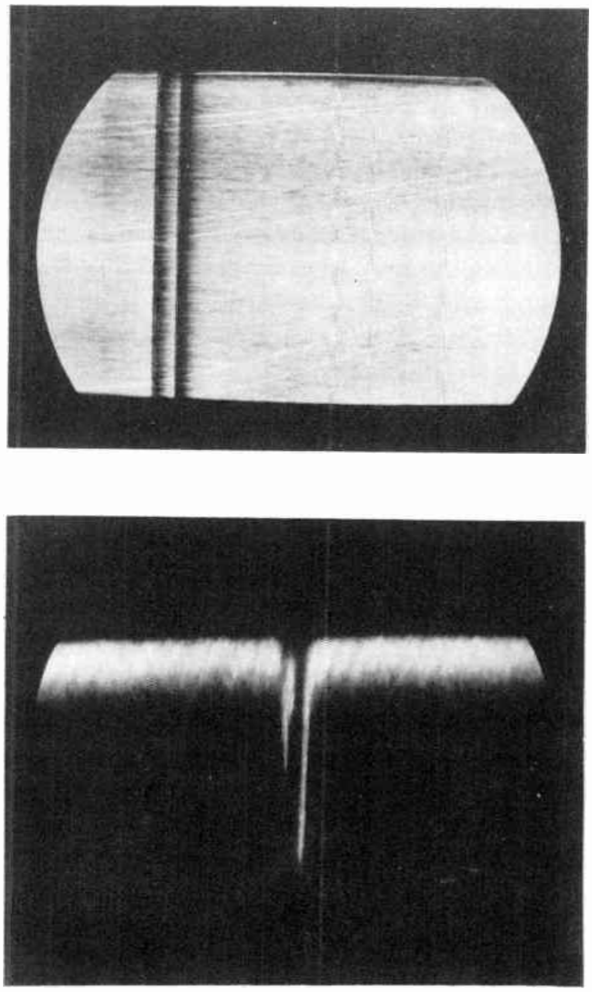

Fig. 37-31

Note that the pulses of Barkhausen oscillation are of large enough amplitude to drive the kinescope grid to cutoff, thus producing the black lines.

These oscillations are actually electron oscillations about the grid of the 6BG6-G. Their exact frequency is unpredictable, since it depends on tube construction and operating potentials, but probably will not be lower than about 30 megacycles or so. The oscillations are quite strong, and beat with the local oscillator to produce the correct i-f on certain channels, particularly the high ones. Because of the strength of the signals they appear black (or black spotted with white) on the kinescope.

While different in nature and frequency from ordinary horizontal oscillations, there is a connection in terms of timing or phasing between Barkhausen and horizontal oscillations. In order for Barkhausen to occur, it is usually necessary for the plate of the 6BG6-G to go *negative.* This is usually only possible at the left side of the raster while *horizontal oscillations* are occurring. Too much drive may create excessive horizontal oscillation, as we have already learned, and this condition encourages Barkhausen to take place. In some cases the Barkhausen can be eliminated by simply resetting the drive control. This shows the connection between Barkhausen and drive. It is now clear that any condition which encourages excessive horizontal oscillation may also be the cause of Barkhausen. Thus one way to avoid or remove Barkhausen is to make sure that there is not too much horizontal drive and that the damping circuits are working properly. Other methods of reducing Barkhausen are:

1. Replace the horizontal output tube. (The old one may work satisfactorily in another set.)
2. Place a *single magnet* type ion trap around the top of the output tube and rotate for best performance.
3. Change the antenna or lead-in placement. (A built-in antenna may pick up an excessive amount of Barkhausen oscillation.)

Horizontal Non-Linearity. -- Another trouble which may be encountered is horizontal non-linearity; that is, a non-constant speed of electron movement across the screen. It may be too slow in some areas and too fast in others. Where the beam movement is too slow, the picture will become *crowded.* Where it is too *fast,* the picture will be *stretched.* Unless the condition is extremely bad, it is difficult to determine non-linearity by watching a picture. A test pattern should be used; side wedges of equal horizontal length indicate linearity.

Frequently, however, a test pattern is not available when needed and a check must be made by some other means. This can be done simply by connecting an r-f signal generator as shown in Fig. 37-32.

An r-f signal generator (or an audio oscillator with extended high-frequency range up to 100 kc or more) is connected in series with a d-c blocking condenser to the grid of the first video amplifier. No antenna signal is desired at this time and the generator ground is tied back to the receiver chassis. The generator frequency is adjusted to about the tenth harmonic of the horizontal scanning frequency; 157,500 cycles. This will result in about 10 vertical bars on the kinescope screen, as shown in Fig. 37-33.

Note that the width and spacing of the bars are equal when the receiver is properly adjusted and is operating normally. This is not so when horizontal non-linearity is present. Some minor defects which cause non-linearity of scanning may be corrected by changing adjustments. If the receiver has been operating correctly and suffers a radical change of linearity, it would be wise to track down the source

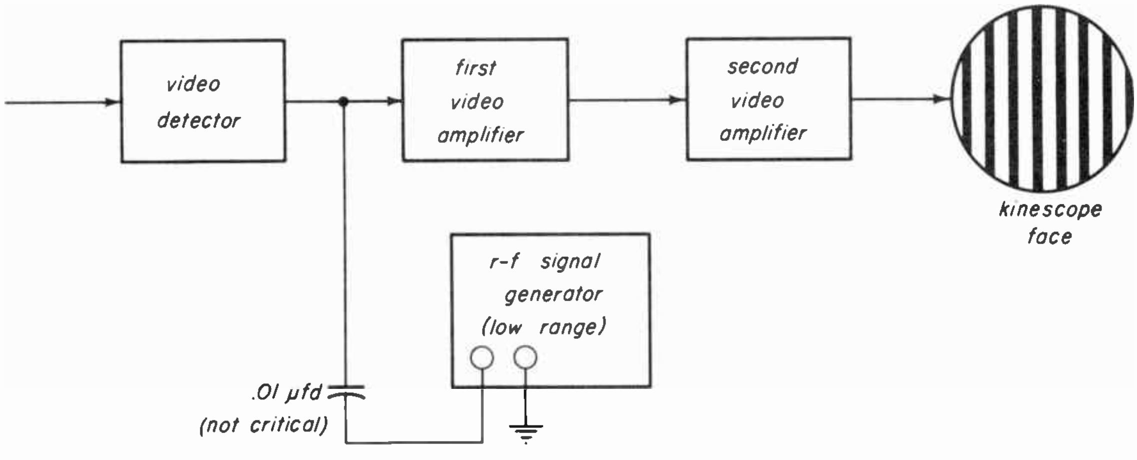

Fig. 37-32

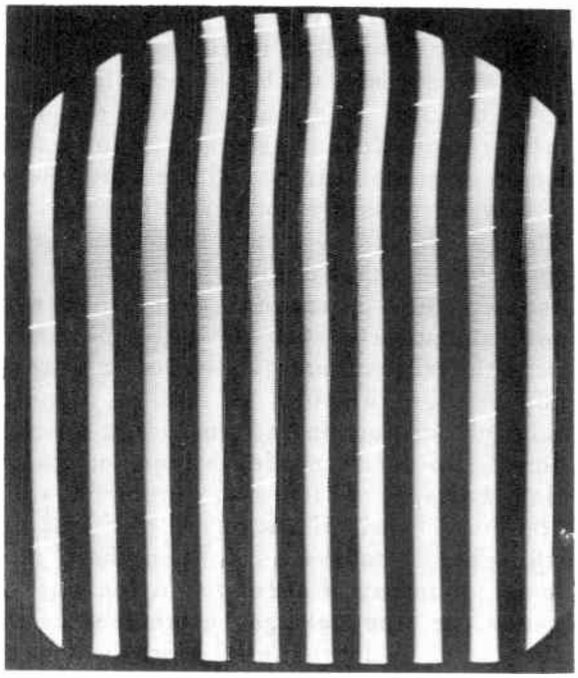

Fig. 37-33

of trouble even if it could be corrected by adjustments. A photograph of horizontal yoke current taken from a normal receiver looks like this:

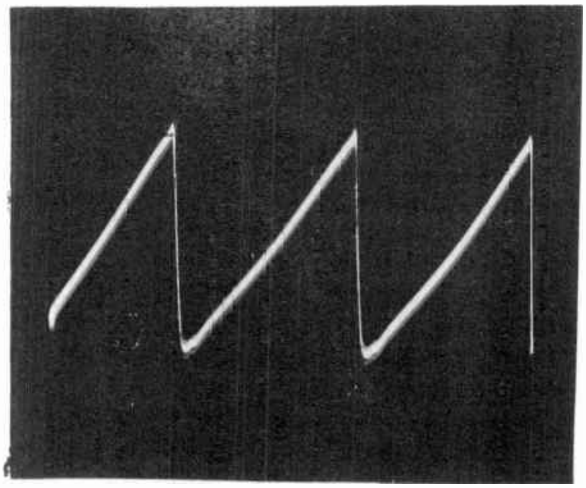

Fig. 37-34

Note the very slight oscillations at the bottom of the sawtooth. These are normal and should not be confused with the larger amplitude oscillations previously shown.

In tracking down the cause of horizontal non-linearity, it is important to keep in mind the functioning of the horizontal system. Aside from adjustments, most of the troubles causing horizontal non-linearity originate either in or preceding the horizontal output tube. As always, be sure the tubes in the horizontal system are all right before pulling the set out. Also, check the adjustments to make sure no one has tightened up all the loose screws.

Almost any resistor or condenser in the horizontal-oscillator or output-tube circuit may cause non-linearity if sufficiently defective. Therefore the values of such resistors should be checked with an ohmmeter. If this does not indicate the trouble, the condensers should be checked for shorts, opens, or leakage. Be sure always to disconnect one side of a condenser when checking it.

An oscilloscope can be of great help in localizing trouble. Suppose you are checking horizontal linearity on the kinescope and find a picture that looks like this:

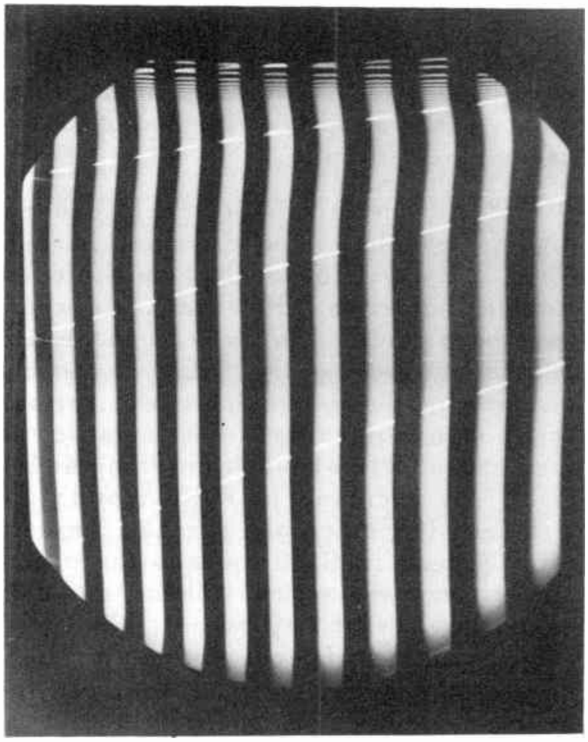

Fig. 37-35

Note that the bars are crowded toward the left and some width has been lost. Analyzing the situation, it would seem that we have lost some drive from the 6BG6-G. Assuming all tubes to be good, we first check the waveshape and its amplitude on the grid of the 6BG6-G, being sure to check *amplitude* as well as sphere. Assume in this case that the waveshape is normal. (You can determine the normal waveshape by referring to the service notes.) Since the grid drive is normal, we next check the circuit elements of the horizontal output tube (Fig. 37-22). A voltage check, although simple and rapid, usually detects only serious faults. However, a voltage check should be made on all the appropriate pins (except plate) of the 6BG6-G to determine if the voltages differ radically from the correct ones. Assume the voltage readings to be normal. We next check the various resistors in the output-tube circuit, and find that they are all normal. The screen-grid bypass condenser (163) is also found to be good. Finally, we disconnect one side of the cathode condenser C162, and find it to be open. Replacing this condenser eliminates the difficulty. With the cathode condenser open, the cathode resistance was unbypassed. A degenerative voltage was thus developed in the cathode circuit which reduced the output of the 6BG6-G and caused the difficulty.

Other component faults could cause a similar trouble. For example, in Fig. 37-22 a leaky C161 could give a similar trouble indication. However, this would have been detected in the waveshape test at the 6BG6-G grid. Other component changes in these circuits cause various types of non-linearity. For instance, an increase of R186 causes crowding at the right. A decrease in R181 crowds the right and left sides and spreads the center. A leak in C160 spreads the center and crowds the right. These are only examples of what may happen in *one* set. Different types of receivers use different components and circuits. However, the basic procedure for locating trouble is always the same:

1. Study the kinescope picture.
2. Determine the section causing trouble.
3. Localize the component failure.

Insufficient Width. -- When a raster decreases in width, there are frequently other symptoms such as oscillation or non-linearity. In such cases the first thing to look for is the cause of the oscillation or non-linearity. On the other hand, it may be possible for a receiver to lose width without any appreciable change in linearity. Small decreases in width are usually due to weakening of tubes with use, and usually can be compensated for with the adjustments; however, any radical change in width is due to a faulty tube or component and should be tracked down. Do not be misled by temporary low line voltage, which may occur in some areas at certain times of the day or night when peak loads exist. When there is a doubt about such a condition, be sure to check the line voltage before tearing the set apart. A decrease of width is usually accompanied by a drop in the high voltage. This is to be expected, due to the nature of the high-voltage supply, and usually should not be interpreted as a separate trouble. Some causes of decreased width are listed below:

1. Weak horizontal oscillator or output tubes
2. Increased value of sawtooth charging resistor (such as R179 in Fig. 37-22)
3. Faulty sawtooth condenser (such as C161 in Fig. 37-22)
4. Shorted width control
5. Shorted horizontal yoke coil (to be explained later)
6. Other faults which also cause noticeable horizontal non-linearity, (previously described)
7. Low B plus voltage
8. Low line voltage

VERTICAL DEFLECTION TROUBLES

37-8. The vertical-deflection circuits are less likely to cause trouble than the horizontal circuits. This is due to the fact that in general the vertical circuits:

a. Operate at a much lower frequency.
b. Operate at lower power output.
c. Have much lower peak a-c voltages in the output system.

d. Do not have elaborate damping systems or high-voltage supplies.
e. Use simple potentiometer controls for adjustments.

This does not mean that vertical-deflection troubles will never appear, but that horizontal-deflection troubles will be encountered more often.

When vertical deflection troubles do occur, it is equally important that they be found and corrected properly and efficiently. This section will assist in doing so.

As in horizontal-deflection troubles, the appearance of the kinescope picture is of great help in troubleshooting vertical circuits. Generally speaking, vertical troubles can be listed in the following categories:

1. Those which cause complete loss of vertical deflection.
2. Those which cause a partial loss of height, and vertical non-linearity.
3. Those which cause an *increase* of height, and vertical non-linearity.
4. Those which cause an excessive frequency shift, preventing synchronization.

In discussing vertical troubles, we will consider only one type of vertical deflection system, which is used in many sets. The only notable exception is the vertical system used in some late receivers such as were described in this lesson. However, procedures which apply to one system apply in general to the other. A schematic of this commonly used vertical system is shown here:

No Vertical Deflection. -- In the first example we will consider, no vertical deflection at all is present. In this case the kinescope will show only a single bright horizontal line, like this:

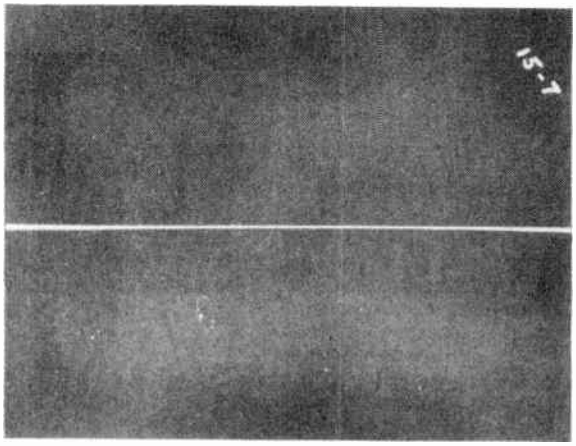

Fig. 37-37

As always, the first step is to check the *tubes*. Failure of either the vertical oscillator or output tubes could cause this trouble. Check by substituting other tubes. This can frequently be done by taking tubes from other parts of the receiver for temporary substitution. Assuming the tubes to be all right, we must look further. A voltage check will often reveal any radical defect; this should be made next. The non-functioning of either tube in the vertical circuit could cause a complete loss of vertical deflection. A quick check of vertical oscillator operation can

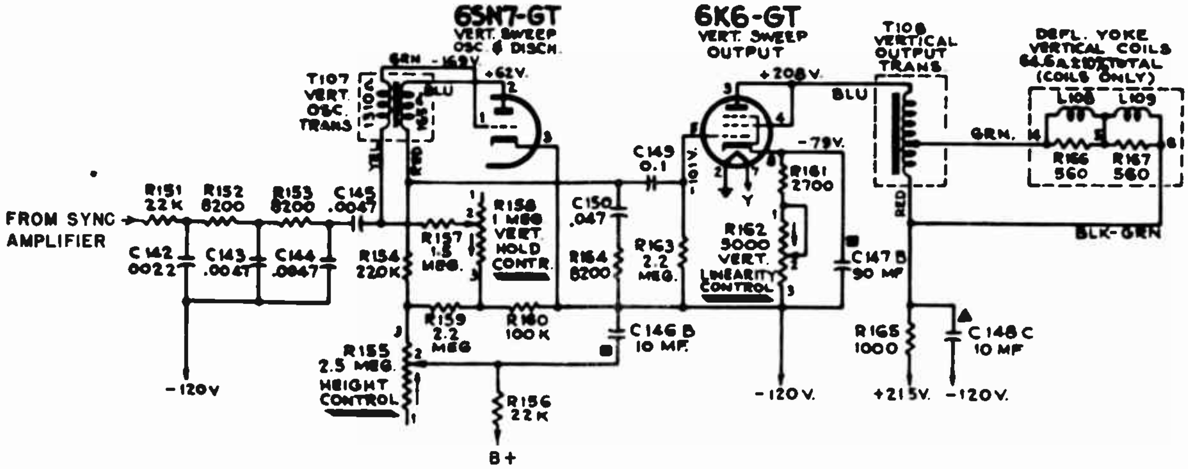

Fig. 37-36

be made by measuring the grid bias. If it is normal (check against service notes), it is safe to assume that the vertical oscillator is working satisfactorily; you can then concentrate on the output circuits. A simple check of the vertical deflection amplifier can be made by touching the grid of the tube with a screw driver or by inserting a 60-cycle signal from the filament supply. Watch for an increase in vertical deflection. If it appears, the vertical amplifier is probably all right, and the trouble precedes it.

However, as was said before, voltage checks are not always reliable, and the oscilloscope should be used if the trouble cannot be found immediately. The first waveshape to check is the one at the grid of the vertical output tube. Be sure to check amplitude as well as waveshape. If this is all right, the trouble must lie in the output tube circuit. If the waveshape is not normal, the components preceding this point must be checked. Be on the lookout for a leaky or open C145 (Fig. 37-36) or an open C150. Either of these could cause a complete loss of vertical deflection. However, in the case of R156, which goes to B plus, an open or increased value could kill the whole vertical deflection system. This would be easy to find by voltage and resistance measurements.

An open winding in either vertical transformer, while unlikely, could also cause complete loss of vertical deflection. Again, this is easily found by voltage and resistance measurements. In most cases component failures which cause complete loss of vertical deflection are found without too much difficulty by simple voltage and resistance readings, but possibilities such as a leaky C145, which may not be easy to detect, should not be overlooked.

Another possibility in the case of no vertical deflection would be an open C149 or an open R163. The latter, however, is not likely.

Loss of Height and Non-Linearity. -- In many instances, a loss of height is accompanied by a change of vertical linearity, and vice versa. Therefore, these are treated together in this lesson.

A check of vertical linearity can be made without a test pattern in the same way as horizontal linearity was checked. It is only necessary to reduce the frequency of the generator to about 600 cycles, thus obtaining about 10 horizontal bars as shown here:

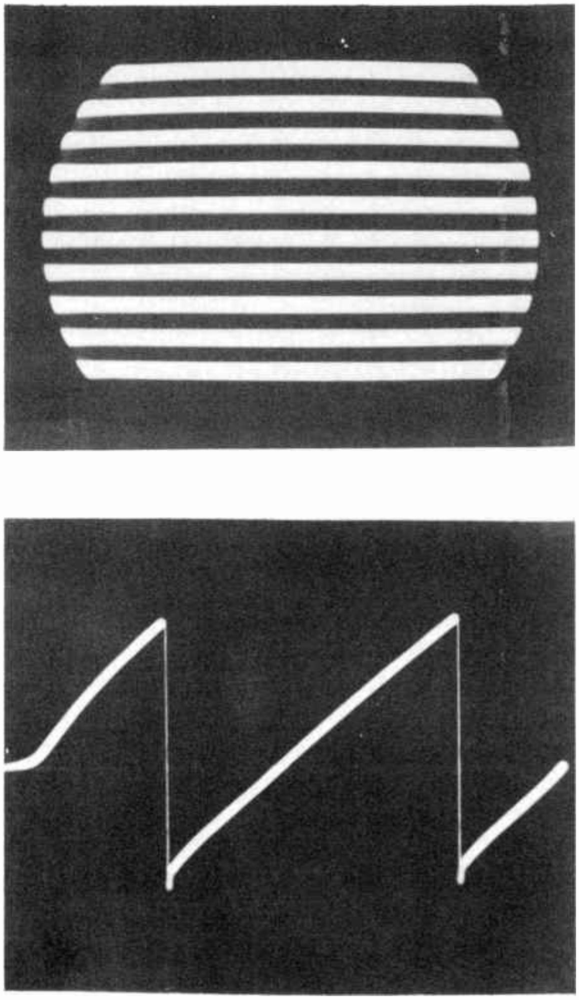

Fig. 37-38

In this photograph the receiver is operating normally, with good vertical linearity and proper height. The accompanying oscillogram shows yoke current. This was obtained by inserting a small resistor (10 ohms) in series with the vertical yoke and connecting the oscilloscope across the resistor.

Suppose there is trouble in the vertical deflection system, and the kinescope raster looks like Fig. 37-39.

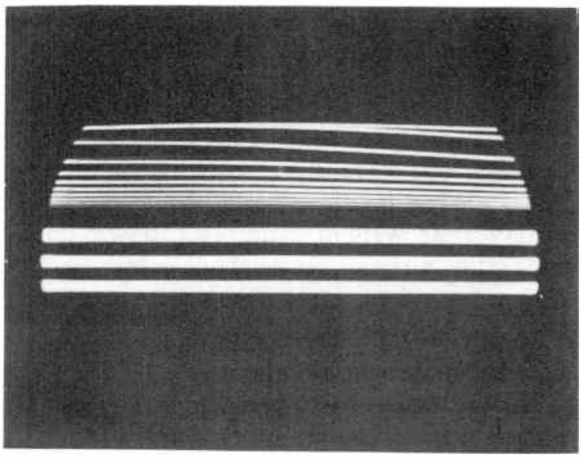

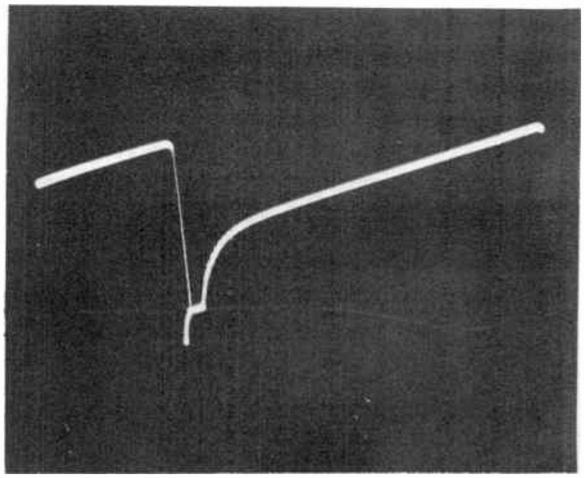

Fig. 37-39

Note the thin lines at the top, the blank space, and the bottom lines which appear to be almost normal. The accompanying oscillogram of yoke current shows excessive peaking at the bottom of the waveshape (top of raster), followed by a steep vertical portion (blank space on kinescope), followed by a fairly linear sawtooth current, which accounts for the almost normal bottom portion of the kinescope. We may recall that peaking in this circuit is produced by R164 (Fig. 37-36), so it is possible that excessive peaking may be the result of an increase in the value of R164. Checking this resistor, we find that it has a value of about 50,000 ohms, as compared to its original value of 8,200 ohms. This is the cause of the trouble; replacing the resistor eliminates it. It is doubtful that other faulty components could cause this peculiar effect; thus when it appears, R164 (or its equivalent) should be checked before anything else, except, of course, the tubes.

Fig. 37-40 illustrates another case where the vertical linearity is very poor. However, in this case the height is not particularly affected.

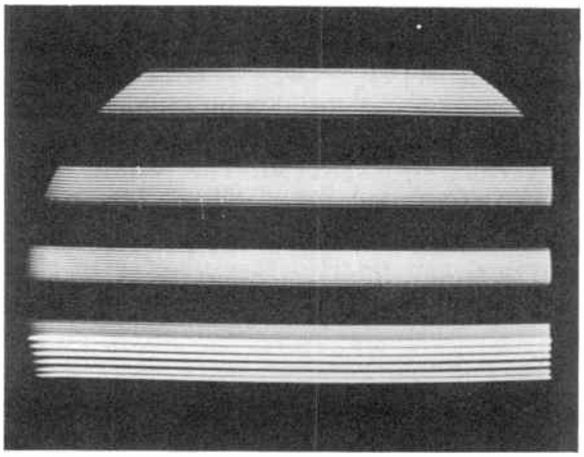

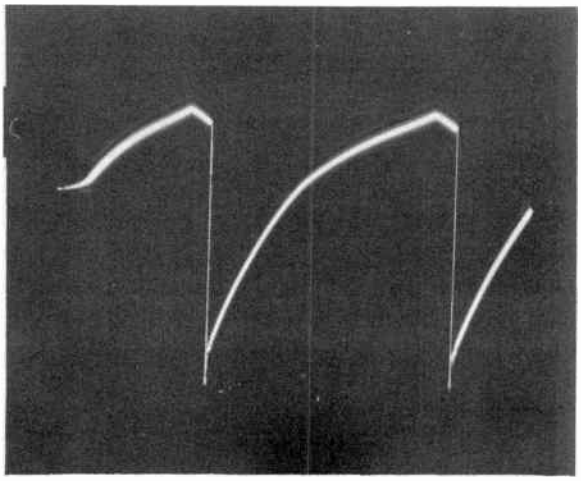

Fig. 37-40

The kinescope picture shows the top stretched and the bottom badly crowded. The accompanying oscillogram was taken at the grid (pin 5) of the vertical-output tube. The negative peak is approximately normal, but note the flattening off of the sawtooth portion at the top of the wave. This is due to grid current limiting. Therefore, it may be assumed that something is causing excessive grid current to be drawn from the vertical-sweep-output tube. The most logical assumption in such a case is that the coupling condenser (C149) has become leaky, causing a more positive voltage to be applied to the grid of the output tube. A check of the grid voltage shows it to be more positive (less negative) than normal, and this is found to be caused by a leaky C149. Note: An oscillogram showing a flattened sawtooth might also be obtained if we had a decreased value of charging resistor, such as R154 or R155. But this would result in a considerable increase of height (not present in this case) due to excessive charging of C150. This would remove C149 as the source of the trouble.

A leaky C150 produces a kinescope picture and oscillogram similar to those produced by a leaky C149, but of greatly reduced amplitude. The photographs of kinescope raster and grid waveshape (6K6) are shown in Fig. 37-41.

The greatly reduced amplitude indicates that this condition probably is not caused by a leaky coupling condenser. Also notice in comparing the two oscillograms that with a leaky C150 we do not find the severe flattening effect so noticeable when grid limiting, due to a leaky C149, occurs.

Let us look now at R165 in Fig. 37-36. This is a series plate resistor (1,000 ohms) which is part of a decoupling filter consisting of R165 and C148. If this resistor increases in value, a reduced plate voltage, and therefore reduced output from the 6K6, is produced. These photographs (Fig. 37-42) were taken with R165 increased to about 100,000 ohms.

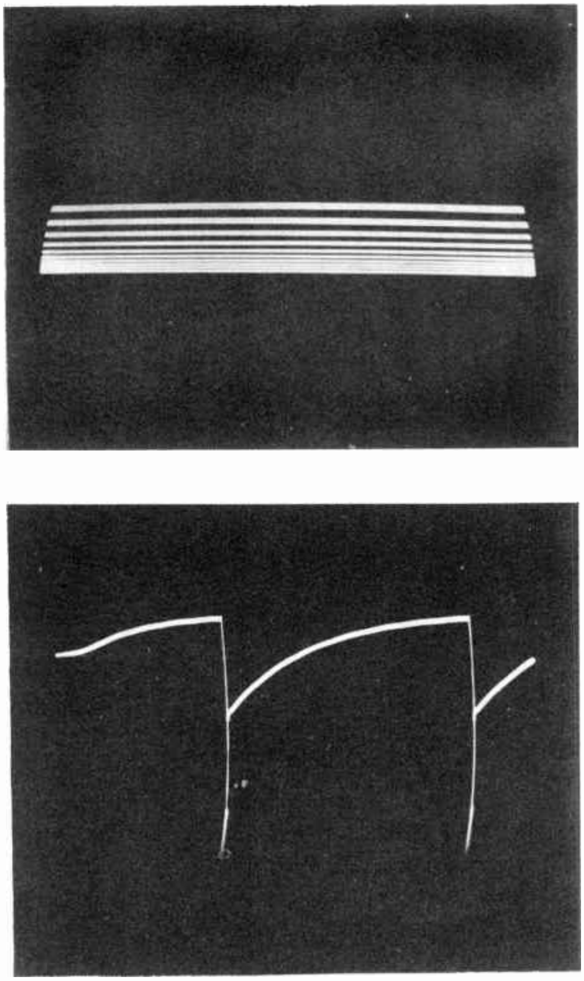

Fig. 37-41

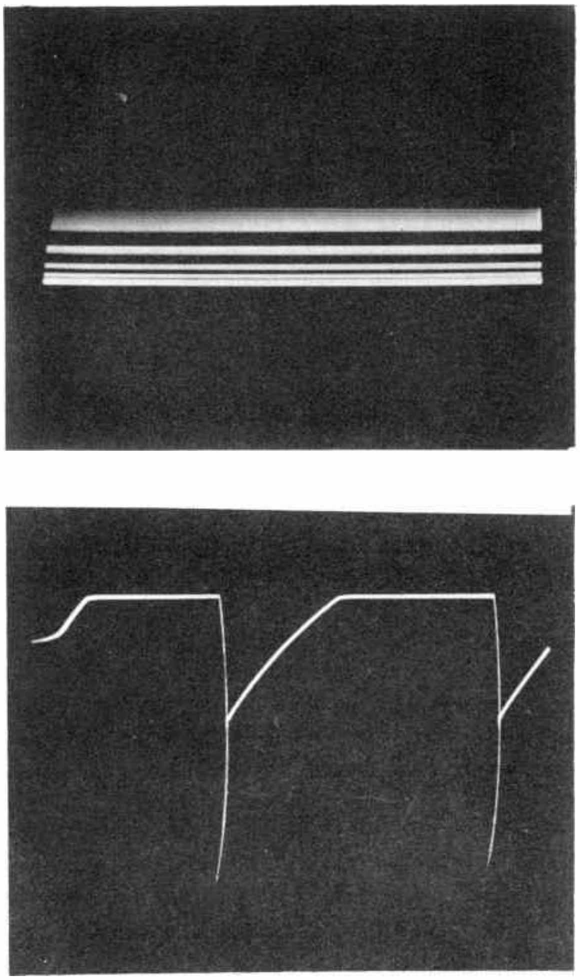

Fig. 37-42

The oscillogram is of yoke current, taken as previously described. Note the decreased height of the kinescope raster and the non-linearity, with the bars widest on top and crowding toward the bottom. The oscillogram shows a reduced sawtooth current which flattens at the top. It is the flattening that produces the crowding at the bottom of the kinescope raster. Remember that the *bottom* of the yoke-current sawtooth always corresponds to the *top* of the kinescope raster.

Increased Height and Non-Linearity. -- Some faults in the vertical deflection system may cause increased height with accompanying non-linearity. Relatively few faults can cause this to happen, which makes them easy to track down. For example, the photographs of Figure 37-43 were taken with a fault producing increased height and non-linearity.

Due to the increased height, not all of the bars appear on the kinescope. Note the crowding of the bars toward the bottom caused by the curvature of the yoke current. Since height has been *increased*, we might assume that the sawtooth condenser (C150) is charging up too high. This is a definite possibility. We will assume, however, that checking this circuit reveals no defects, and that the waveshape on the grid of the vertical-output tube is normal in shape *and* amplitude.

Since the input wave to the output tube is normal, the increased height must be due to *decreased* bias. A lower bias would shift the input wave higher on the tube characteristic, where the transconductance is greater, and thus produce a greater (but non-linear) output. A low bias could be caused by a short or reduced value of R161 or R162 (Fig. 37-36). This can be quickly checked with an ohmmeter. Assume that these are all right. This leaves only the cathode by-pass condenser C147B and in checking this (after disconnecting one side) it is found to be shorted, thus removing the cathode bias. Replacing this condenser eliminates the difficulty.

In general, increased height may be caused by:

1. Excessive charging of the sawtooth condenser, or
2. Decreased bias on the vertical-output tube.

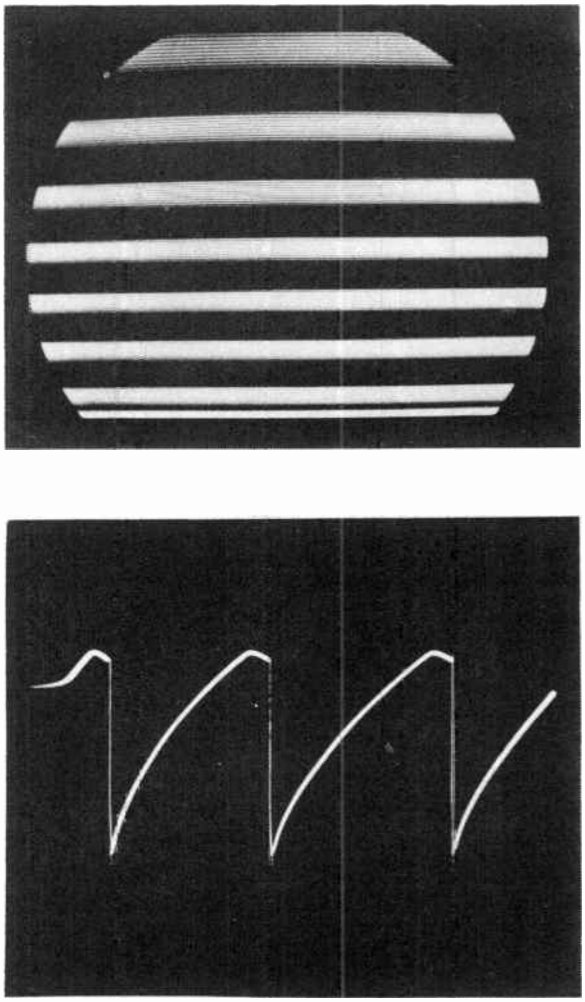

Fig. 37-43

It is possible in some cases to bring a raster back to almost normal by readjusting the height and linearity controls. For small changes in height and linearity this is perfectly proper. However, if a radical change occurs in a short time, it usually indicates that a fault has developed. Under such circumstances, eliminating the fault with the controls merely postpones trouble, at best. The fault still exists, and probably will reappear in a more aggravated form. It is therefore wiser to track down the fault and repair the set properly.

Loss of Synchronization. -- In some cases, it becomes impossible to sync in the vertical oscillator. Neglecting difficulties in the sync circuits, which have been covered in a previous lesson, and assuming that the tubes are not defective, relatively few components can cause this trouble. (We are assuming that height is normal.) Inability to sync in the vertical oscillator usually results from not being able to approach sync frequency with the the range of the hold control. The hold control (R158 in Fig. 37-36) might be defective, and should be checked to make sure that its value has not changed and that the resistance varies smoothly when the shaft is turned. If the control is not at fault, we must check the other components affecting the time constant of the grid circuit of the vertical oscillator. In Fig. 37-36 C144, C145, R157, or R160, if faulty, could cause an excessive frequency change resulting in loss of synchronization.

In the type of vertical system illustrated in Fig. 37-4, loss of synchronization is sometimes due to the characteristics of the output transformer, T106. In such cases replacing this transformer will eliminate the trouble. The old transformer need not be thrown away, as it may work satisfactorily in another chassis. The R and C components likely to cause loss of synchronization in this chassis are: C139, C140, R200, R148, R149, and R151. Troubles in this circuit similar to those discussed previously may be encountered and may in general be traced down by the same methods and reasoning used before.

YOKE TROUBLES

37-9. Horizontal Yoke Troubles.-- Yoke troubles are usually easy to find, due to the severe effect they produce on the raster. For example, consider Fig. 37-44. This condition occurs when there is a short circuit across one of the two horizontal deflection coils (for diagram see Fig. 37-25 or other horizontal circuit). Notice the trapezoidal (keystone) shaped raster and the reduction of width. If the other coil were shorted, the trapezoid would be upside down; narrow at the bottom and wide at the top.

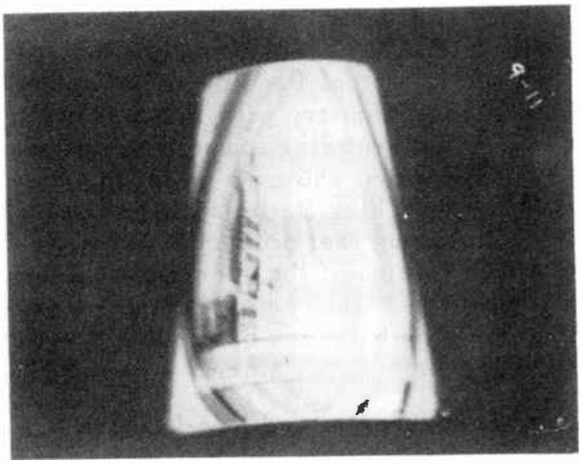

Fig. 37-44

In Fig. 37-25 C155 is shown across one of the horizontal deflection coils. This is a 56-micromicrofarad condenser, connected to reduce oscillation of the yoke. If the condenser becomes defective, or has the wrong value, extreme horizontal oscillation may occur. This is not a fault of the damping or driving circuits previously discussed. In such a case the kinescope picture may look something like this:

Fig. 37-45

Notice the bright vertical bars caused by oscillation of the beam. This particular type of oscillation is so characteristic of yoke trouble that there should be little chance of confusing it with other types. In any event, replacing C155 will immediately cure it and eliminate the other circuit as the source of trouble.

Arcing. – Arcing may occur *inside* the yoke cover, usually between leads connecting to the vertical and horizontal coils. This type of trouble may occur more frequently in later sets using the high-impedance yokes (Fig. 37-22). Due to the increased impedance of the high-impedance yoke, a higher voltage kick is developed across it, with a greater tendency toward arcing. This difficulty, if not a dead short, shows up in the raster as reduced or erratic changes of width, with variations of brightness. The arcing can often be heard near the yoke, although care must be taken in approaching the high voltage. In receivers having plug-in type yokes, you can take the yoke off the kinescope, plug it back in and look inside it with the set turned on. If it is arcing between the connecting leads, it is usually a simple matter to dress the leads far enough apart to stop the arcing. Arcing may also be due to a breakdown of the insulation between the horizontal and vertical yoke coils. In such a case, replace- of the yoke is usually necessary. If the arcing is not too severe, it may be possible to repair the yoke by installing new insulation. A complete short between horizontal and vertical coils probably will result in a partial or complete loss of width and high voltage.

Due to high kick-back voltage of the high impedance yokes, another type of arcing may appear *outside* the yoke. This arcing occurs between the *filament winding* of the *damper tube* and the case of the low-voltage transformer. Examination of Fig. 37-25 will show how this is possible. Note that the filament winding ties into the "hot" side of the horizontal yoke coils through the cathode connection. This means that the high voltage kick of the yoke is passed directly to the filament winding. If sharp points exist at the internal connections to the filament winding, the high-voltage kick will arc through the transformer-case insulation to the metal case. This does not destroy the transformer or filament winding. Repairs can be made by removing the outer shell of the transformer, rounding off the sharp connection points to the filament winding with solder, and applying new case insulation. The transformer will be better than new, because the rounded connections will prevent future arcing.

Vertical Yoke Troubles. – As in the vertical-deflection circuits, fewer vertical than horizontal yoke troubles may be expected. This is due to the lower power and voltage present in the vertical yoke. A short circuit across one of the vertical deflection coils produces a trapezoidal raster, which looks like this:

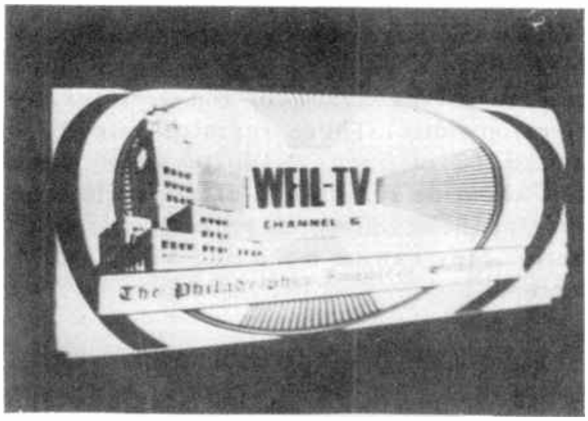

Fig. 37-46

If the other coil were shorted, the trapezoid would be reversed, with the narrow portion at the left.

An open vertical deflection coil produces a raster of small height which looks like this:

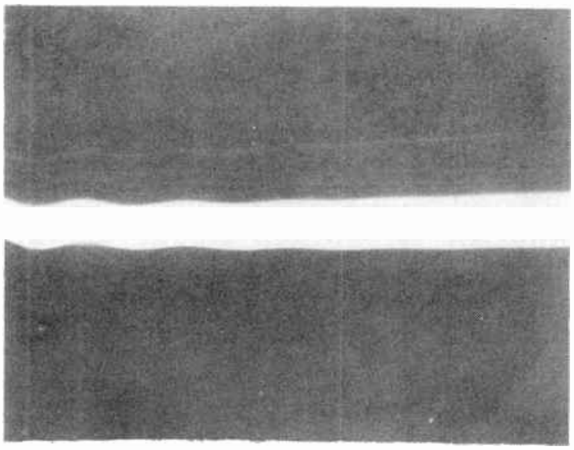

Fig. 37-47

Notice the oscillation due to lack of sufficient vertical damping. This raster has a trapezoidal shape and is wide at the right side. In general, when the raster assumes a trapezoidal shape, it is usually caused by a short or open circuit in the deflection coils.

Vertical Oscillations. – Cases of oscillations producing deflection in the vertical direction are rare. If they are present (with normal raster), they are usually due to an open or increased value of damping resistor across each of the vertical deflection coils. These resistors are R166 and R167 in Fig. 37-36. Because of the low shunting resistance of the coils, one side of the resistors must be disconnected before they can be measured with an ohmmeter.

Summary. – Throughout this section, we have tried to emphasize several steps necessary for efficient troubleshooting. Briefly, these are:

1. Understand thoroughly the functioning of the circuit.
2. Examine the kinescope raster carefully.
3. Disregard the soldering iron and parts box for a few minutes, and try to reason out the situation.
4. Decide in which *section* of the receiver the trouble probably is located.
5. Change the tubes in that section. If this does not eliminate the trouble,
6. Check the voltages, resistors, and condensers, using the oscilloscope to help isolate the defective local circuit.
7. Change the defective part.

You need not follow this procedure exactly, for every case of trouble in the deflection circuits. However, it represents a method of troubleshooting with a definite procedure and as such can be of value.

◆

NOTES

NOTES

TELEVISION SERVICING COURSE

PREPARED BY

RCA INSTITUTES, INC.
A SERVICE OF RADIO CORPORATION OF AMERICA

HOME STUDY DEPARTMENT
350 West 4th St., New York 14, N. Y.

LESSON THIRTY EIGHT

PART I – THE KINESCOPE

PART II – KINESCOPE TROUBLES

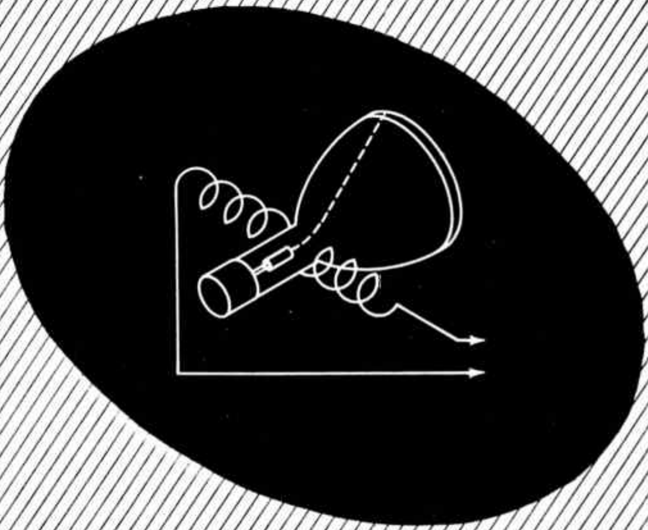

Lesson 38

PART I – THE KINESCOPE

STRUCTURE OF THE KINESCOPE

38-1. The function of the kinescope is to convert the electric signals applied to its electrodes into the picture the viewer sees. The kinescope is made up of three main parts: the electron gun, the fluorescent screen, and the tube envelope. In this respect it is like other cathode-ray tubes, such as those used in oscilloscopes. Special characteristics, however, make it more suitable for picture reproduction.

The Electron Gun. – The purpose of the electron gun is to provide a fine beam of electrons and to accelerate this beam toward the fluorescent screen with enough energy so that the screen will emit light when the electrons strike it. The gun usually consists of a cathode which supplies the electrons for the beam, a control grid which modulates the electron beam with the picture signal, and two anodes which accelerate the electrons toward the screen. Electron guns vary in structure, but all operate on the same principle.

The cathode used in the kinescope is of the indirectly heated type. It consists of a spiral heater element, usually of pure tungsten wire, surrounded by the cylindrical cathode. Figure 38-1 shows a typical cathode. The cylinder is made of pure nickel. One end of it is coated with strontium and barium oxide. The heater wire, although insulated electrically from the nickel cylinder, makes good thermal contact with it, so that when the heater current passes through the tungsten filament, the heat developed is easily transferred to the nickel cathode. The oxide coating on the end cap, when heated, provides a good supply of electrons.

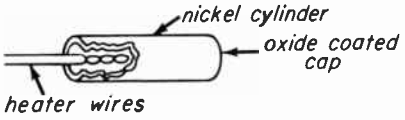

Fig. 38-1

The Grid. – Surrounding the cathode, and having the same center axis, is another, larger cylinder. This element, shown in Fig. 38-2, is the control grid – sometimes called grid number 1 or the modulating grid. It controls the direction in which electrons are emitted from the cathode and modulates the intensity of the electron beam.

The small aperture in the closed end of the grid carries out the first function. The grid itself is kept at a negative voltage with respect to the cathode, to repel the electrons emitted from the cathode. The aperture, however, is large enough that the electrons are attracted by a relatively high positive voltage on the accelerating electrodes. These elements are so constructed that when correct operating voltages are applied, the electrons leave the cathode, pass through the aperture, and converge at a point outside the grid. This is called the crossover point (Fig. 38-2). It plays an important part in the focusing operation.

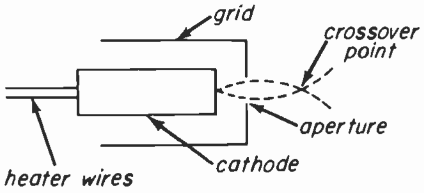

Fig. 38-2

The second function of the grid, modulation of the electron beam, is accomplished by the voltages applied between grid and cathode. In TV receiver circuits, the grid is kept negative with respect to the cathode. The more negative the grid voltage, the fewer the electrons that can pass through the grid aperture. In most picture tubes, the electron beam is cut off entirely if the grid goes more than 45 to 55 volts negative. Since the number of electrons that strike the fluorescent screen is one of the factors that determines how bright the spot on the screen will be, the amount of this bias voltage between grid and cathode determines the average brightness of the picture. The brightness control on most receivers is simply a potentiometer which varies this bias.

Kinescope data sheets usually give the grid voltage value as that voltage on the control grid which gives "visual extinction of an undeflected focused spot." This is the voltage on the grid which causes the light emitted at the fluorescent screen to cease to be visible. It is the cut-off bias for the kinescope. Usually a range of voltages is given, representing the range of control grid voltages over which the tube will operate properly. For the 16GP4, for example, -33 volts is the lowest control grid voltage, and -77 volts the highest, for proper operation.

The undeflected spot, although meaningless so far as an operating television receiver is concerned, serves as a convenient reference for specifying the bias voltage. The cut-off voltage for a normally deflected spot is somewhat less.

Two typical bias circuits are shown in Fig. 38-3. In circuit *a*, both grid and cathode circuits are connected to the B-plus supply of the video output amplifier. Because the output amplifier current flows through R1 and R2, there is a voltage drop across these resistors which makes the voltage on the grid lower than that on the cathode. The potentiometer serves as brightness control. In circuit *b*, both the grid and cathode circuits are connected to the -100 volt supply. In this case there are no voltage drops in the grid circuit, but the voltage drop in the brightness control due to the kinescope current keeps the cathode positive with respect to the grid. There are many variations of these bias circuits, and nearly every receiver circuit is somewhat different, but all are the same in principle.

The *video signal* is also applied between grid and cathode of the kinescope. This signal contains the picture information. When it modulates the electron beam, it causes the dark parts of the picture to appear dark on the fluorescent screen by cutting down on the beam intensity, and the light parts to appear light by making the beam more intense. When the amplitude of the video signal is increased, the grid swings more negative (that is, closer to cutoff) during the dark parts of the picture, and more positive during the light parts of the picture. This control of the video signal amplitude applied between grid and cathode of the kinescope is the contrast control.

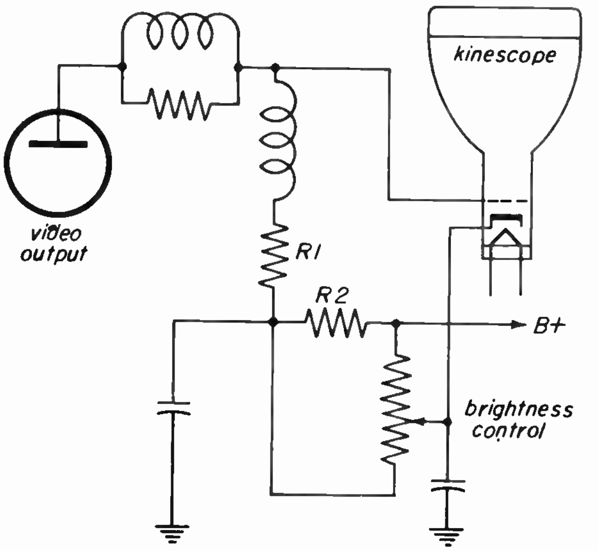

(a) Bias circuit

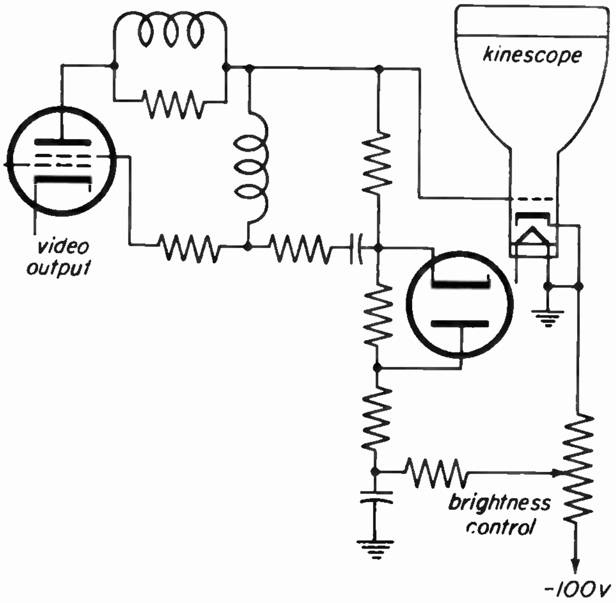

(b) Bias circuit

Fig. 38-3

First Anode. – The purpose of the accelerating anodes is to speed up the the electrons on their way to the fluorescent screen. Figure 38-4 is a diagram of an electron gun having two anodes, called the first and second anodes. These are cylindrical, and on the same axis as the cathode and grid. The first anode is closer to the grid and of about the same diameter. It has an aperture, as the diagram indicates, and is usually maintained at 250 to 300 volts positive. This positive voltage attracts the electrons emitted by the cathode and gives them a high velocity. Many of the electrons strike the first anode and never go beyond, but large numbers reach a speed high enough to carry them through the aperture and on to the screen. The purpose of the aperture in the anode is to help provide a very fine beam of electrons.

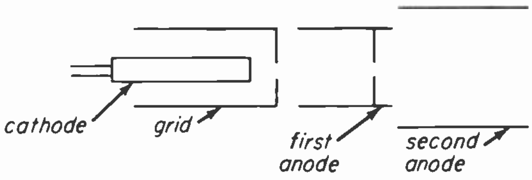

Fig. 38-4

Second Anode. – In older 7- and 10-inch kinescopes and in most cathode-ray oscilloscope tubes, the second anode is simply a larger cylinder, following the first anode and at a higher voltage, usually from 7 to 10 kilovolts. Modern glass kinescopes have, in addition to this large cylinder, a conductive coating on the inside of the envelope. This coating, called Aquadag, is electrically connected to the larger cylinder and is part of the second anode. In metal kinescopes, the metal part of the envelope serves in the same way. The second anode accelerates the electrons still more on their way toward the screen.

Typical second anode voltages for 10- and 12-inch kinescopes are from 9 to 11 kilovolts. In larger picture tubes, the second anode is maintained at from 12 to 14 kilovolts. *Caution:* the metal shell of metal kinescopes is at the second anode potential. This voltage can be fatal.

Glass tubes usually have an outer conductive coating also. The inner and outer coatings, with the glass shell separating them, form an excellent capacitor. If the outer coating is connected to ground, this capacitor serves to filter the high-voltage supply.

Figure 38-5 shows a complete electron gun as used in modern kinescopes.

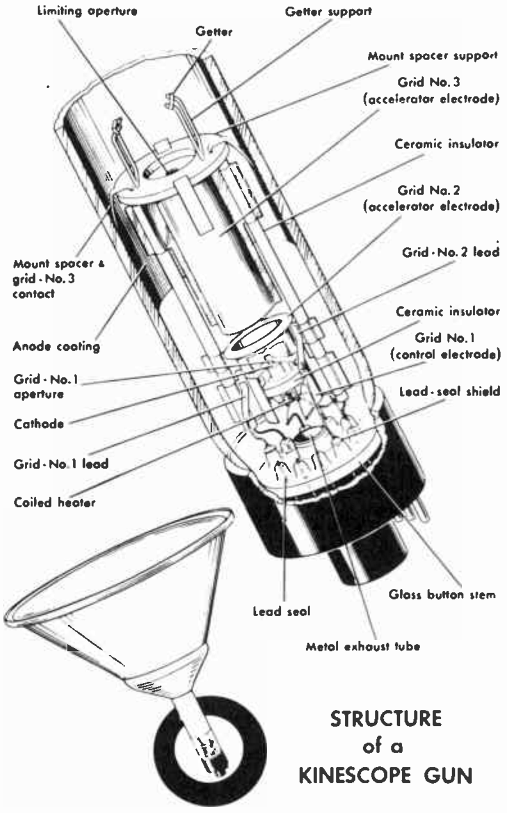

Fig. 38-5

PRINCIPLES OF DEFLECTION

38-2. The electron beam formed by the gun must be deflected in both the horizontal and vertical directions to form the raster on the screen. There are two methods of producing deflection; electromagnetic and electrostatic, although in modern television receivers the electromagnetic method is used almost exclusively. Some of the older 7- and 10-inch kinescopes use the electrostatic method.

Electromagnetic Deflection. – Electromagnetic deflection is based on the fact that an electric current passing through a magnetic field has a force exerted on it that is at right angles both to the direction of the current and to the magnetic lines of force. This principle is illustrated by the diagram of Fig. 38-6, which resembles a simplified electric motor or a simple meter movement. Between the two magnets is a magnetic field of force, with lines of force leaving the north pole and entering the south pole. In this field is a small coil between the poles in the diagram, which is free to rotate. If a current is passed through the coil, the coil is rotated by the resulting force.

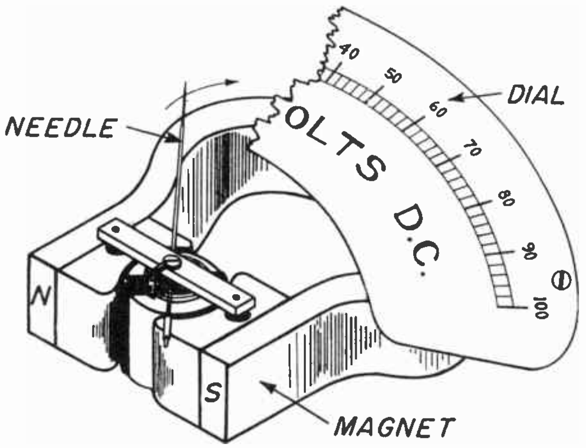

Fig. 38-6

The electron beam to be deflected is an electric current, and it has an advantage in that it requires no wire conductor The electrons themselves have practically no mass; thus it is easy to deflect the beam back and forth inside the kinescope at the very rapid rate required (15,750 times a second for horizontal deflection).

Electromagnetic deflection in a kinescope is produced by two magnetic fields, one for vertical deflection and the other for horizontal. Figure 38-7 shows how vertical deflection is produced. The coils on either side of the tube neck are in a horizontal plane. When current passes through them, a magnetic field is set up which passes *through* the neck of the tube and directly across the path of the electron beam. The beam is deflected in the *vertical* direction as it passes through the magnetic field. If the current through the deflection coil varies with a sawtooth waveshape, the magnetic field varies with the same waveshape, and the electron beam is deflected in the sawtooth manner needed to produce the raster.

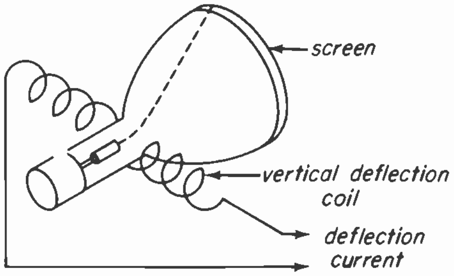

Fig. 38-7

Horizontal deflection is produced in the same way, except that the horizontal coils are placed on the top and bottom of the tube neck, and the deflection rate is different. In television receivers using magnetic deflection, the vertical and horizontal coils are mounted together in a single housing called the *deflection yoke*. A typical deflection yoke is shown in Fig. 38-8. It is doughnut-shaped and slides over the neck of the tube as shown in Fig. 38-9. Most deflection yokes fit tightly against the conical part of the tube envelope; rubber cushions help keep them in place and prevent the tube from being scratched.

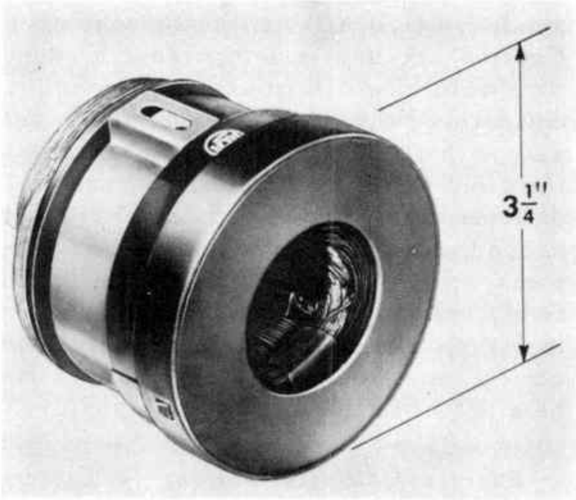

Fig. 38-8

Deflection Angle. – The amount of deflection necessary to produce a raster that will fill the face of the tube is a characteristic of the kinescope itself, and depends on the length of the tube cone and the diameter of the face. All electromagnetic deflection tubes are given a rating called the *deflection angle.* This is the total angle through which the beam sweeps as it is deflected from one edge of the screen to the opposite edge; in other words, the maximum deflection angle. This is illustrated in Fig. 38-9.

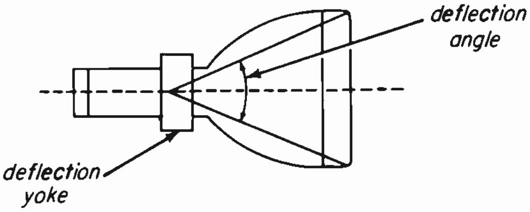

Fig. 38-9

Most 12- to 20-inch kinescopes have deflection angles of from 55 to 65 degrees, and some of the larger tubes have angles of 70 degrees. The 30BP4, a 30-inch tube, has a deflection angle of 90 degrees.

The amount of deflection provided by the yoke depends on two factors: the amount of deflection current in the coil, and the voltage on the second anode. The strength of the deflecting field is proportional to the amount of deflecting current, so that to get a full raster ample current must be supplied to the yoke. The second anode voltage affects the amount of deflection because it determines the speed with which the electrons pass through the deflecting field. If the second anode voltage is high, the electrons pass through the field faster and have less time to be deflected, and the raster is smaller. If the second anode voltage is low, the electrons spend more time in the deflecting field, are deflected more, and the raster is larger. If the raster on a receiver becomes too large, one of the causes may be a defect in the high-voltage supply.

Electrostatic Deflection. – Electrostatic deflection is based on the fact that a charged particle in an electrostatic field has a force exerted on it proportional to the magnitude of the field. In cathode-ray tubes using electrostatic deflection, the electron beam passes between two parallel plates charged with opposite polarity, as shown in Fig. 38-10.

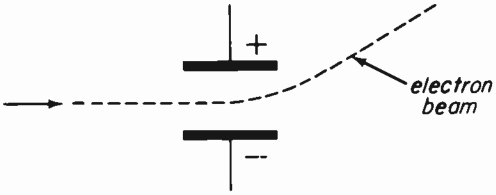

Fig. 38-10

The electrons, as they pass between the plates, are attracted to the positive plate and deflected from their original course. To obtain the sawtooth deflection needed to produce a raster, it is only necessary to vary the charge on the deflection plates with a sawtooth waveform. Kinescopes have two pair of plates, one pair for vertical deflection, the other for horizontal. These plates, as shown in Figure 38-11, usually have flared ends, so that there is less chance of the electron beam hitting the ends of the plate if the deflection voltage is too high.

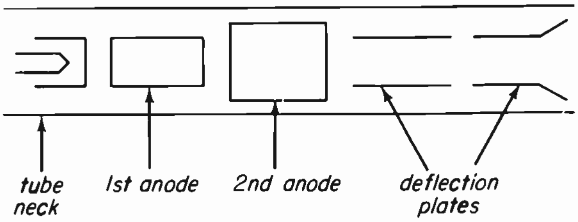

Fig. 38-11

Electrostatic-deflection tubes are given a rating called the *deflection factor,* which corresponds to the deflection angle of electromagnetic deflection tubes. This factor, in volts per inch, tells how many volts are required on the deflection plates to move the electron beam one inch from the center of the screen.

It is apparent that the main difference between electromagnetic and electrostatic deflection is that the first depends on a deflection current through a yoke, while the second depends on a deflection voltage applied to the plates. Electromagnetic deflection is favored for kinescopes for several reasons. Perhaps the most important is that the deflection voltage would have to be extremely high in larger kinescopes – of the order of several thousand volts. It is much easier to supply a high deflection current. Another reason is that the gun structure of electromagnetic-deflection tubes is simpler because the deflection plates, which must be accurately aligned, are eliminated. A third reason is that both horizontal- and vertical-deflection coils can be placed around the neck of the tube at the same place, close to the flare of the tube, which makes possible shorter tubes.

FOCUSING

38-3. Another important process that takes place in the kinescope is focusing of the electron beam. The beam, as has been said, is made of electrons. Because these electrons are not confined to a wire conductor, and because they all have a like charge, they tend to repel each other. Therefore, the beam would spread out like a spray before reaching the screen if some means for keeping it together were not provided. The spot of light on the screen caused by the striking electrons must be at least as small as the finest detail to be shown in the picture. The term "in focus" simply means that the spot is made small enough that all parts of the picture are as sharp in detail as possible.

As with deflection, focusing can be accomplished either by electrostatic or by electromagnetic means. The earliest kinescopes used electrostatic focusing. As tube sizes increased, it became more convenient to use magnetic focusing, but early in 1951 gun design was improved so that electrostatic focusing could be used with larger tubes, thus saving appreciable amounts of copper and magnetic material by eliminating focusing coils.

Magnetic Focusing. – Like magnetic deflection, magnetic focusing depends on the fact that an electron has a force exerted on it when it crosses magnetic lines of force. If the electron moves parallel to the lines of force, as shown in Fig. 38-12, no force is exerted on it and it continues in a straight line. If it strays from this straight-line motion, the magnetic field exerts a force on it that is at right angles both to the direction in which the electron is moving and at right angles to the line of force. The result is that it continues in a spiral path until it is no longer in the magnetic field.

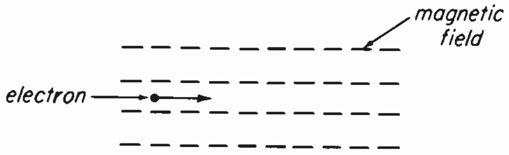

Fig. 38-12

Figure 38-13 shows two electrons leaving the same point but going in different directions. The spiral motion caused by the magnetic field twists them around so that they will cross paths again at a point further along the line, as indicated by the dashed lines. They will continue to do this as long as they are under the influence of the magnetic field.

Now we can see the importance of the crossover point mentioned in Section 38-1. All the electrons leaving the grid converge on a small point outside the grid. Although they spread out again immediately, we can make them converge again farther along the line by causing them to pass through a suitable magnetic field parallel to the desired direction of the beam.

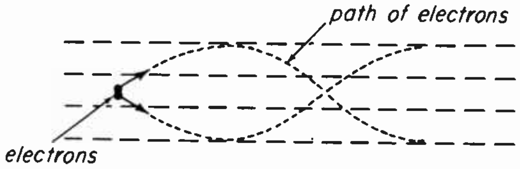

Fig. 38-13

Actually, it is not necessary to provide a magnetic field extending the entire length of the tube. The focusing magnet, which fits over the neck of the tube behind the deflection yoke, is rather short, as shown in Fig. 38-14. With the proper strength of field, the erring electrons are given just enough twisting motion to make them meet again as they strike the screen.

PM Focus Magnets. – The simplest method of providing a focusing field is with permanent magnets. Permanent magnets are arranged about an iron core which can be moved to provide the focusing adjustment.

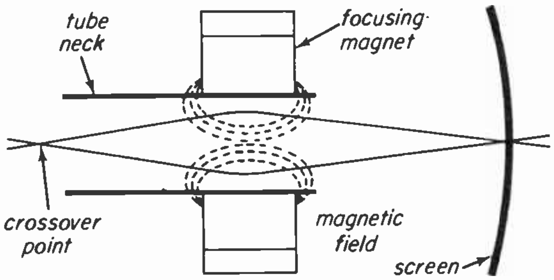

Fig. 38-14

In earlier television receivers an electromagnetic coil was used for focusing but most kinescopes today with magnetic focusing use a permanent magnet. With a PM focus magnet a mechanical centering ring is used to center the picture.

Figure 38-15 illustrates a commonly-used permanent-magnet focusing ring. In the center is a thin sleeve of non-magnetic metal which fits over the neck of the kinescope. This sleeve is stationary, but it supports a larger iron sleeve about an inch long which moves back and forth along the axis of the kinescope neck as the focus adjustment is turned. Two metal flanges outside the iron ring support three pieces of alnico which provide the magnetic field. The entire assembly usually is fastened to the deflection yoke case and is separated about a half-inch from it by spacers.

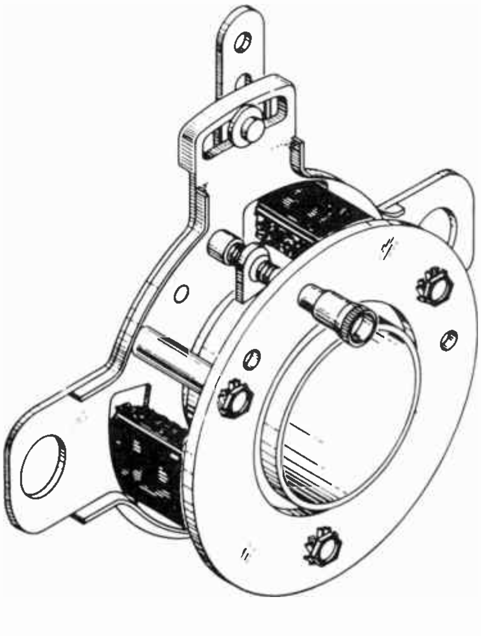

Fig. 38-15

The three pieces of alnico alone would not provide a magnetic field sufficiently uniform for good focusing. However, the iron sleeve, which is symmetrical about the tube's axis, controls the distribution of magnetic flux to provide a uniform field inside the tube neck. By moving the sleeve forward or backward, the entire field inside the tube neck can be moved to provide the focusing action.

This type of focusing is popular in TV receivers using magnetic focusing because the adjustment is simple and because no focusing currents must be supplied. The movement of the iron sleeve gives a wide range of adjustment, and if this is not enough for best focusing, the entire assembly can be moved closer to or farther from the deflection yoke by adjustment of the spacer bolts. This gives a rough focusing adjustment, and allows a fine adjustment to be made within a suitable range.

Some receivers use a combination of electromagnetic and permanent-magnet focusing. In this case the focusing ring consists of a permanent magnet inside which a coil is wound. The permanent magnet supplies the bulk of the magnetic field, and the coil current can be varied to provide focusing adjustment. The focusing current required by such coils is usually from 30 to 40 milliamperes. These combination coils have not proved popular because they are more expensive to construct than permanent-magnet rings, and because in many cases the permanent magnet loses so much of its magnetism that the coil current cannot sufficiently control the focus. This is avoided in permanent magnet rings by aging the magnets properly before they are installed.

Focus Coils. – All-electromagnetic focusing has also been used in many receivers. In such cases the focusing coil consists of a coil of wire surrounded by an iron casing. The casing has an air gap, as illustrated in Fig. 38-16. The focusing current required is usually from 115 to 120 milliamperes; focus is adjusted simply by varying the current through the coil. This type of focus coil is not popular because of the relatively high direct current needed.

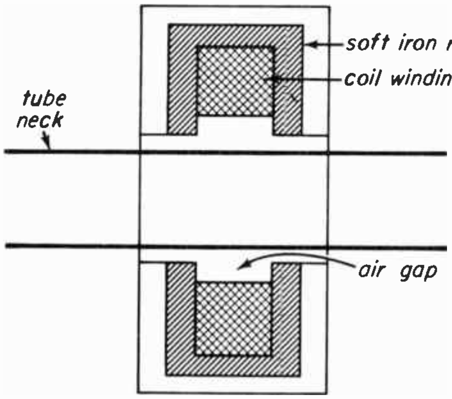

Fig. 38-16

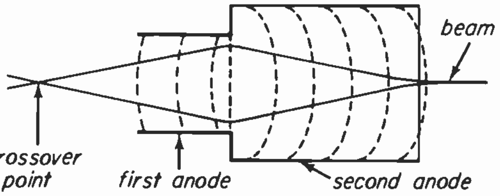

Fig. 38-17

Electrostatic Focusing. – Many older types of kinescopes, especially the 7- to 10-inch sizes, use an electrostatic field to accomplish focusing. Focusing action depends on the configuration of the electrostatic field that is set up between the first and second anodes, as indicated in Fig. 38-17. In this diagram, the dotted lines represent lines of equal electrostatic field strength. That is, if an electron is at any point on one of these lines, the same electrostatic force is exerted on it. Electrons in the beam must pass through these lines, and, because of the electrostatic forces, their path is bent toward the inner axis of the tube. Thus, if we shape the lines properly, by making the two anodes of the right size and shape and by applying the right voltages to them, we get the desired focusing action. The focusing control on sets using this type of tube is simply a potentiometer which controls the voltage on one of the anodes.

Many new, large-screen kinescopes are now using electrostatic focus, but in these the focusing action is somewhat different, involving a special focusing electrode. Figure 38-18 shows the gun structure and location of the focusing

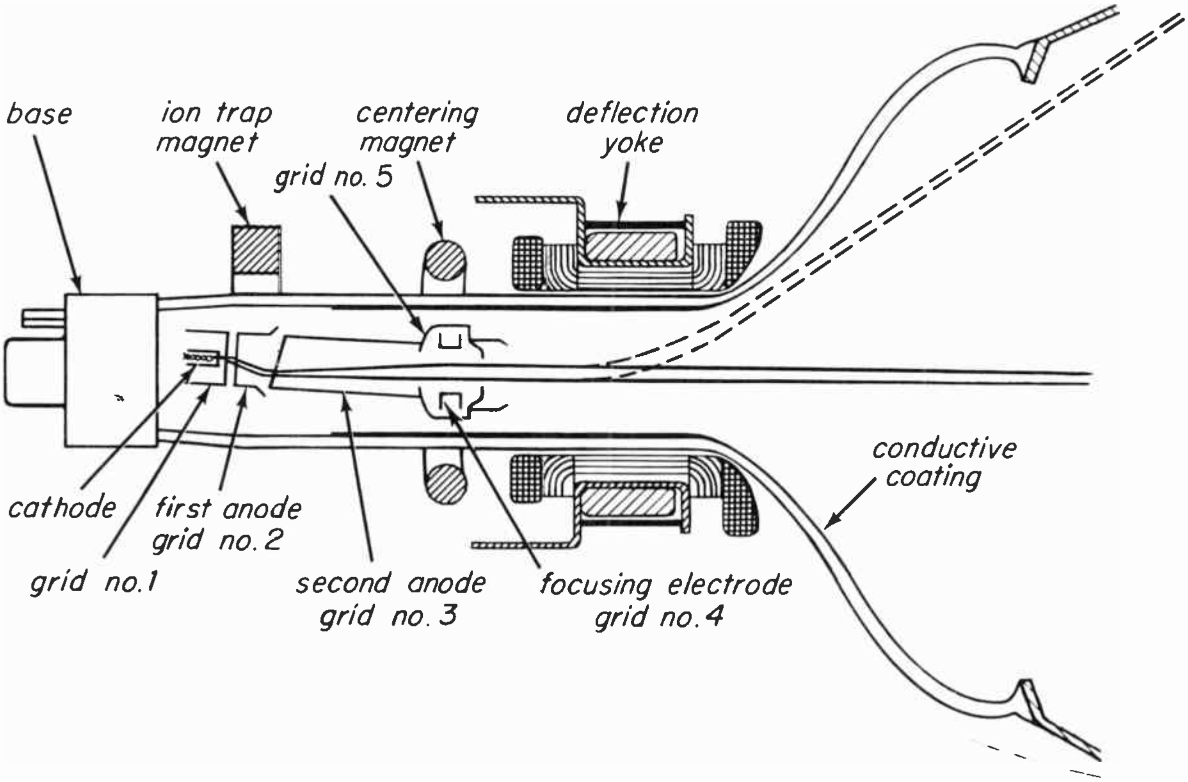

Fig. 38-18

grid in this type of tube. Grids numbered 3 and 5 are electrically connected together and form a second anode similar to the second anodes already described. The first anode, marked grid number 2, and the rest of the gun structure, are also like those previously discussed.

Grid number 4, the focusing electrode, is the only new element in this gun structure. When a suitable voltage is applied to it, focusing action takes place in much the same way as in the older electrostatic-focus tubes.

The focusing action depends on the amount of voltage applied to the focusing electrode, and on the design of the gun. Some electrostatic-focus tubes require about 20 percent of the second-anode voltage on the focusing grid. This amounts to from 2,000 to 2,500 volts, depending on the tube type. Figure 38-19 shows three methods of obtaining a suitable focusing voltage. Circuit *a* shows a bleeder across the high-voltage supply to tap off the focusing voltage.

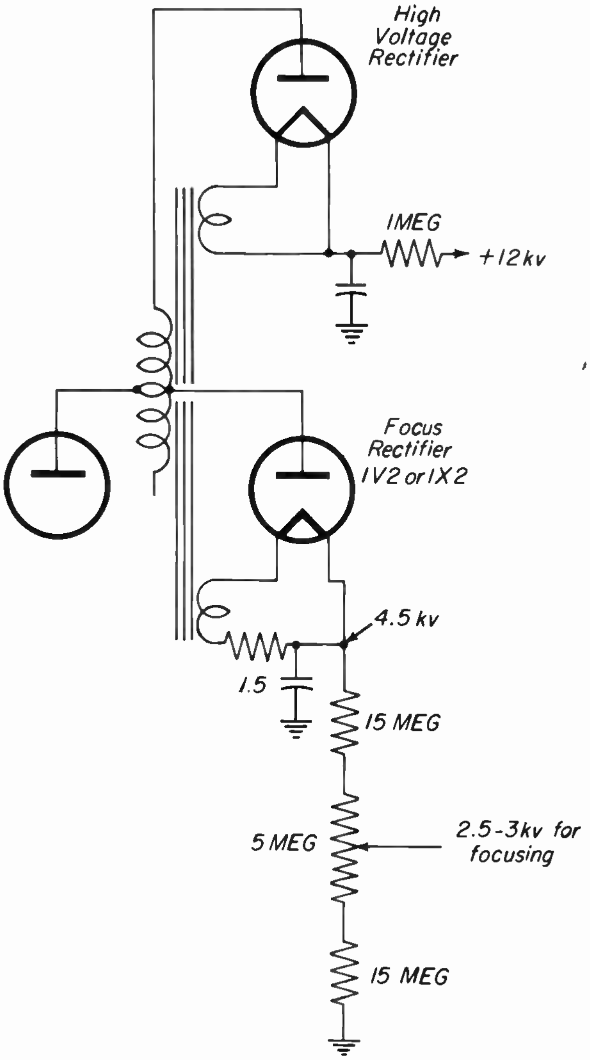

(b)

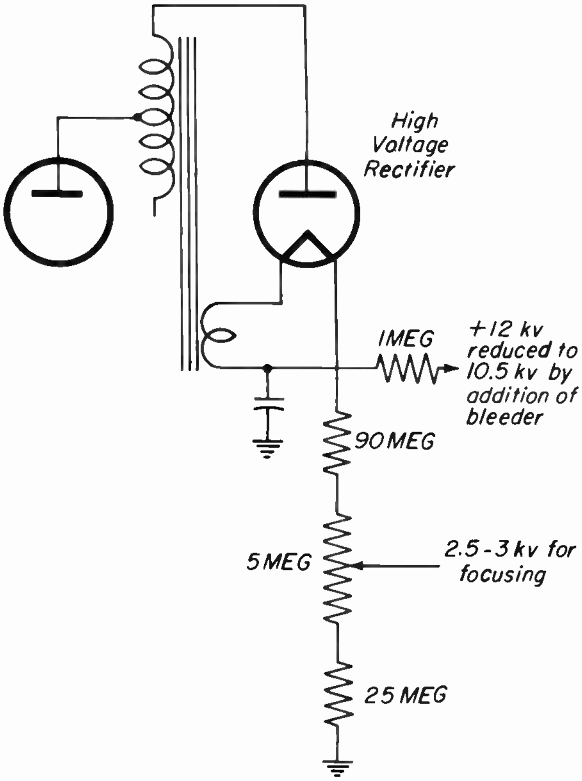

(a)

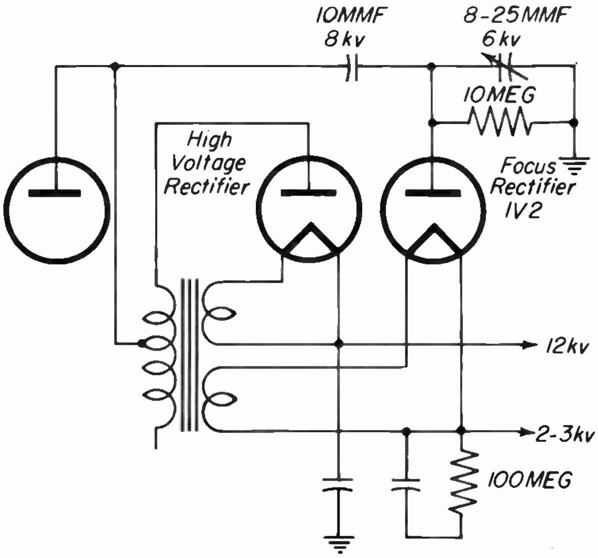

(c)

Fig. 38-19

Circuit *b* in Fig. 38-19 uses a separate rectifier tube which rectifies the high positive pulses on the plate of the horizontal output amplifier. This makes the voltage divider much simpler, and variations in brightness have practically no effect on the focusing voltage. This circuit does not cause a drop in the second anode voltage.

Circuit *c* is similar to *b*, but has the added advantage that the focusing voltage is controlled by a trimmer capacitor which is at a low voltage. This eliminates special insulated mountings and shafts, which are required by the potentiometer of circuit *b*.

The main advantage of electrostatic-focus kinescopes is that substantial amounts of copper or permanent-magnet materials are saved.

Some electrostatic-focus kinescopes now being made use only a few hundred volts on the focusing electrode, usually from 200 to 400 volts. These are called low-voltage focus tubes and are like those just described except for slight differences in the gun structure.

Figure 38-20 is a circuit diagram showing how the focus voltage may be obtained. In this case, the boosted plate voltage, available at the cathode of the damper tube, is applied to the focusing electrode through a 7.5-megohm potentiometer which serves as focus control. This circuit shows only one of many possibilities; any point in the circuit with suitable voltage would be satisfactory since the focusing electrode draws no current and does not load the circuit.

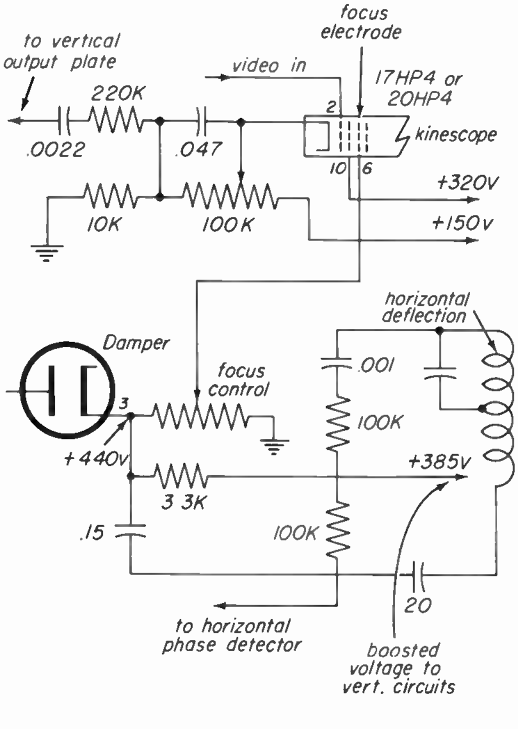

Fig. 38-20

Self-focusing tubes are also available. They require neither a focusing magnet nor a focusing voltage, and have no external connection to the focusing electrode. The electron-gun construction of these tubes is like that of the other electro-static-focus tubes, and they do have a focusing electrode. However, the focus voltage is obtained by an internal connection through a high resistance between the focusing electrode and the second anode. Focusing is completely automatic.

Defocusing Problems. – When the focus in a kinescope is adjusted, the electron beam is in exactly the correct focus at only one point. This presents a problem, because the distance that the beam travels from the focusing field to the screen is not the same at all points of the screen. This is shown in Fig. 38-21, in which the beam is shown to be in focus at the center of the screen. As the beam is deflected from the center, the in-focus point of the beam would follow along the dashed line of the figure, which is the arc of a circle whose center is approximately in the center of the focusing field. The face of the tube, however, does not curve as much as this arc, and the beam is not exactly in focus when it hits the screen at points other than the center. This defocusing is most noticeable at the edges of the screen; the effect is called edge defocus. The problem is the same for all types of tubes, but it is not annoying to

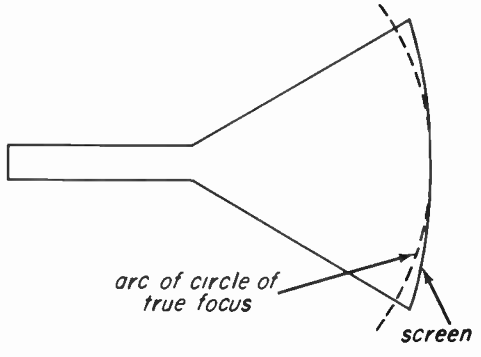

Fig. 38-21

the viewer if the second anode voltage is at the right value and the focusing field is adjusted correctly.

In magnetic-focus tubes, defocusing occurs if the second anode voltage drops below its normal value, reducing the speed of the electrons as they pass through the focusing field. In the high-voltage electrostatic-focus kinescopes, this does not usually occur, because the focusing voltage and the second anode voltage, both of which are rectified from the horizontal output tube, will drop by proportional amounts. Thus the focusing is maintained if, for example, the a-c line voltage drops, although the raster will get smaller. This automatic focusing action takes place in the low-voltage electrostatic-focus tubes only if the focusing voltage and the second anode voltage always change by proportional amounts. This will usually be true for changes in a-c line voltages, but not for drops in the high-voltage because of aging or other defects in the horizontal output circuit.

In addition to this automatic focusing, the high-voltage electrostatic-focus tubes also have less edge defocusing if a focusing voltage circuit like those of Fig. 38-19 *b* or *c* is used. The rectified horizontal output pulses are not filtered perfectly so that the focus voltage is not pure direct current. Instead, its waveshape is such that the focusing varies as the beam moves from left to right across the screen, and the focusing is good on both sides of the screen as well as at the center.

ION TRAPS

38-4. Ion spots. – Some kinescopes, after having been in use for some time, develop a small, round, brownish spot from a half-inch to an inch and a half in diameter in the center of the screen. This is called an ion spot or ion burn, and results from bombardment of the screen by gas ions produced in the tube. These ions are emitted in small amounts by the cathode, or they are formed when electrons collide with gas molecules left in the tube due to imperfect vacuum.

Ion spots occur only in kinescopes which use electromagnetic deflection. This is because, in electrostatic deflection, the amount a charged particle is deflected does not depend on either its charge or its mass. Thus all particles are deflected the same amount, and any ions in the kinescope are deflected over the entire area of the raster. In magnetic deflection, the amount a particle is deflected depends on the ratio of its charge to its mass. The gas ion, having the same charge as an electron but several thousand times its mass, is deflected much less by the magnetic field and an ion spot forms at the center of the raster.

An ion spot is not the result of the afterglow which leaves a very bright spot on the screen for a few seconds after the set is turned off. This afterglow occurs simply because it takes some seconds for the high voltage to decay after the set is turned off, and since the deflection voltage has gone off the beam is concentrated near the center of the screen. Furthermore, ion spot may be visible only when the raster is present, and it is not to be confused with a possible screen burn caused by an undeflected beam. The ion spot may be more noticeable when the high voltage is lower than normal, because the velocity of the electrons is reduced and they cannot penetrate the ion cluster so easily.

Ion Traps. – Once an ion spot has formed in a kinescope it cannot be removed. If it is objectionable, the only remedy is to replace the picture tube. However, practically all modern kinescopes eliminate ion spot trouble by the use of ion traps. An ion trap consists of a small magnet, or pair of magnets, which fits on the neck of the tube and prevents any ions that may be formed from reaching the screen. Two types of ion traps are in general use: the bent-gun type and the slashed- or tilted-field gun type.

Figure 38-22 shows how the bent-gun ion trap operates. The cathode end of the gun is mounted askew in the neck of the tube so that it aims at the side wall of the tube neck. The second anode, as the diagram indicates, is slightly bent, so that this end of the gun does aim toward the screen. A small permanent magnet, usually a piece of alnico mounted in a clamp, is fitted on the neck of the tube over the gun. When the beam is formed, the electrons and any negative ions that may be present are at first accelerated toward the side of the second anode. But the electrons, easily deflected by the magnetic field from the small magnet, are bent toward an aperture in the second anode. The heavier ions are not deflected, but strike the anode wall where they can do harm.

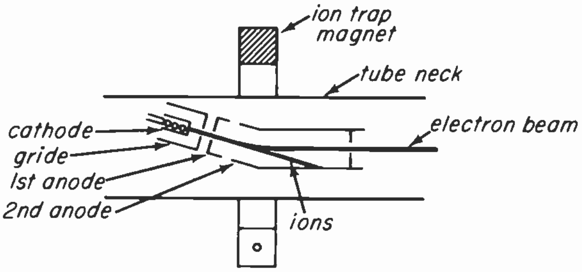

Fig. 38-22

The slashed-field gun, illustrated in Figure 38-23, need not be mounted askew in the tube neck. It requires two permanent magnets. The facing ends of the two anodes are cut at an angle to the axis of tube so that the electrostatic field which accelerates the electron beam is distorted. Both electrons and ions, which are deflected the same amount by an electrostatic field, are aimed toward the wall of the anode as they leave the cathode. The ions continue in their initial direction, but the electrons are straightened out by the shape of the magnetic field produced by the two permanent magnets.

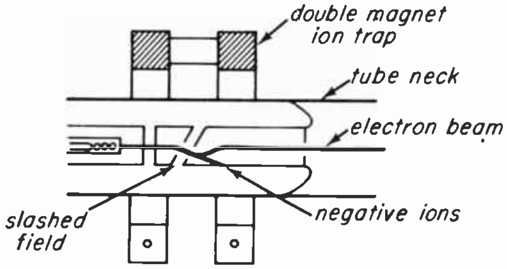

Fig. 38-23

Ion Trap Adjustment. – Adjustment of the ion trap is simple, but must be done very exactly to avoid damage to the tube and to obtain maximum brightness. The procedure is essentially the same for both types of traps, except that with the double-magnet type the smaller of the two magnets must be in the forward position and farthest from the base end of the tube.

The tube is located in the set so that the bent end of the gun points upward. In the case of the slashed-field gun, the wide side of the slashed field is on the top. These parts of the gun are visible through the glass tube neck.

For the first adjustment, slide the clamp which holds the magnet over the neck of the tube so that the magnet is on the glass part of the tube neck about one-quarter inch from the plastic tube base. Make this adjustment with the lowest setting of the brightness control at which a raster is visible.

Rotate the magnet around the neck of the kinescope, at the same time sliding it forward and backward. Notice that the brightness of the raster varies. Stop at the point of maximum brightness.

Reduce the brightness control again and continue moving the magnet until the raster cannot be made any brighter by sliding the magnet. To make the final adjustment, vary the brightness control until the raster begins to bloom (expand rapidly and defocus) and carefully set the magnet for maximum brightness.

If no raster appears during this process, try reversing the ion-trap magnet. If its polarity is wrong, the electrons will not be deflected in the right direction. Sometimes two points of maximum brightness appear. If this happens, use the one at which the magnet is closest to the base of the tube. The second maximum occurs when the ion-trap magnet is too close to the focusing magnet. It will interfere with the focusing.

Sometimes the adjustment cannot be made at all. If the magnet is demagnetized from having been dropped or otherwise mistreated, it may not have enough strength to give the full deflection required. In this case the raster will be weak.

Occasionally, the magnet is too strong, and proper ion-trap adjustment cannot be made even if the magnet is slid well back on the base of the tube. If a more suitable magnet is not immediately available, the magnet may be temporarily shunted with a paper clip or other small piece of magnetic material. This will reduce the strength of the field enough so that adjustment can be made.

Centering Control. – Some means must be provided to center the raster on the kinescope screen. A rough adjustment, of course, is made when the deflection yoke and focus coil are mounted on the tube. The yoke must be slid as far up on the tube neck as possible so that it fits firmly against the cone of the tube. The focus coil, which is fastened to the yoke housing by screws and separated from it by spacers, is usually about one-half inch behind the yoke. If the yoke and coil are not in proper position, the centering adjustment may not be enough to center the raster.

Mechanical centering is often used in modern receivers. With this type of control, the position of the electron beam within the tube is adjusted by moving a magnetic shunt which is attached to the focus magnet. The shunt is a flat, circular, iron disk with a hole in the center that is slightly larger than the diameter of the tube neck. The disk fits flat against one side of the focus magnet and can be slid either vertically or horizontally along the face of the focus magnet. Figure 38-24 shows such an arrangement. When the disk is moved, the shape of the magnetic field is altered enough so that the raster can be centered.

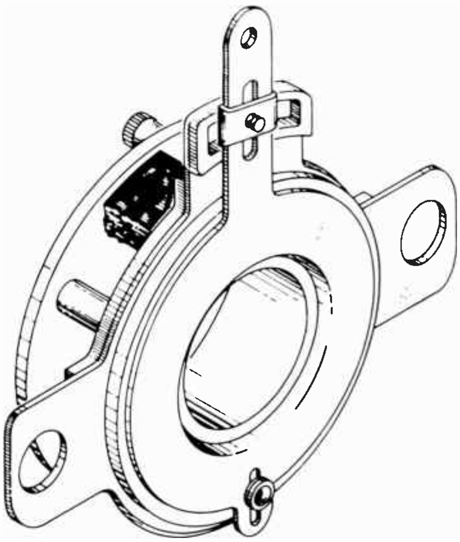

Fig. 38-24

Another method of centering control sometimes used is that of passing direct current through the deflection coils. The direct current sets up a constant magnetic field within the tube which gives a constant deflection of the electron beam. This constant deflection is independent of the sawtooth deflection current. By varying the strength of the direct current, the entire raster can be moved vertically or horizontally. Figure 38-25 is a simplified circuit of this type of control.

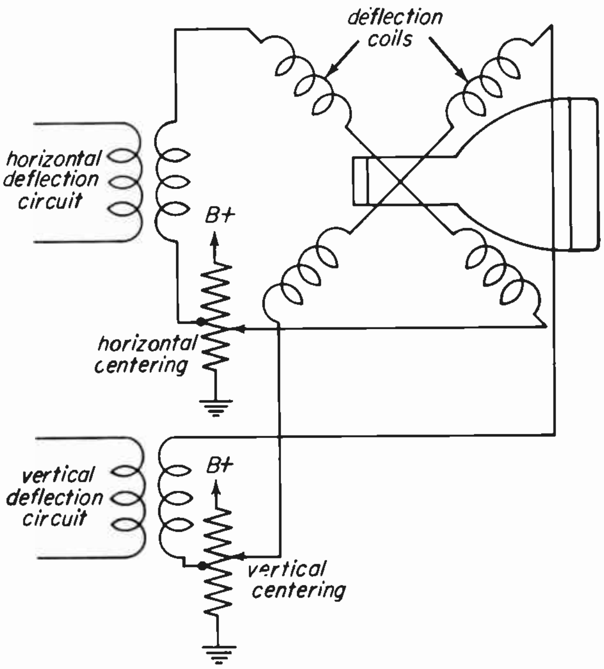

Fig. 38-25

Electrical centering is now less common than mechanical centering because of the added load on the power-supply circuits. Also, mechanical centering is more easily accomplished and does not change with variations in supply voltage or other circuit conditions.

Electrostatic-focus tubes have no focusing magnet to which a movable shunt can be attached for centering. Direct current can be used in the deflection yoke for centering, but a simpler method is that of using a small external magnet similar to an ion-trap magnet.

One type of external-centering magnet consists of a small piece of alnico mounted on a shaft. It can be rotated on bearings between two iron pole pieces, as shown in Fig. 38-26. The entire unit is clamped to the tube neck by a wing nut. When the magnet is positioned so that its polarity is as shown in the diagram, most of the magnetic flux passes through the pole pieces and through the neck of the tube, where it affects the electron beam. If the magnet is rotated through 90 degrees, none of the flux reaches the inside of the tube. Thus the centering flux can be adjusted from a maximum value to zero by rotating the magnet within the pole pieces.

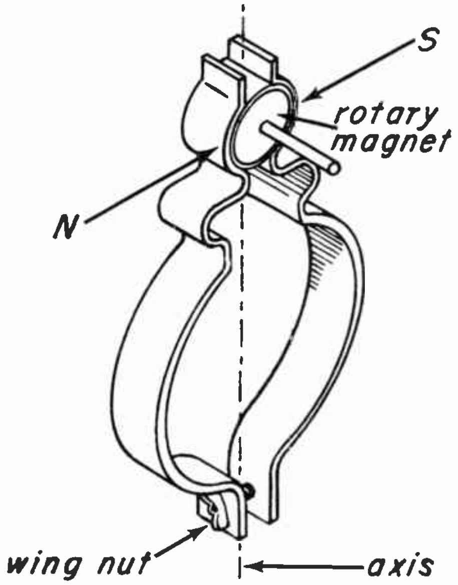

Fig. 38-26

Centering with this device is accomplished by first rotating the entire centering unit on the neck of the tube so that its axis (shown in Fig. 38-26) is in line with the direction of displacement of the raster. Then the magnet itself is rotated until the raster is pulled to the center of the tube face.

Centering magnets can be used in pairs. The two units are placed on the neck, one behind the other, with their axes at right angles. For centering adjustments, only the two magnets need be rotated; the pole pieces are left stationary on the tube neck.

THE FLUORESCENT SCREEN

38-5. ***Phosphors.*** – As was said at the beginning of this lesson, the kinescope converts the electric picture signal into the light pattern which the viewer sees as a picture. The actual process of converting electric energy into light energy takes place in the coating on the inside of the tube face.

This coating is a material which emits light when struck by high-velocity electrons and continues to emit light for a short time afterward. The property of the material to emit light during the electron bombardment is called *fluorescence;* its ability to continue to emit light is called *phosphorescence.* Materials possessing both these properties are commonly called *phosphors.*

Many kinds of phosphors are available for cathode-ray tubes. The choice for any particular use depends on a selection of these properties: color of luminescence; luminescent efficiency; and duration of phosphorescence, or persistence. For kinescopes the color of the emitted light should be white, since we are most accustomed to looking at black-and-white pictures. The luminescent efficiency must be as high as possible to eliminate the need for impractically high voltages.

Phosphors with persistences of from only a few milliseconds to several seconds and longer are available. For kinescopes, a medium persistence is selected. When the electron beam passes a given point on the screen, the light emitted must not die out immediately, or the picture would appear to flicker. Nor must the light at that spot last too long, or it would interfere with light emitted on the next passage of the beam, and the moving picture would appear smeared and flat.

The phosphor itself is a nonconducting material. We might therefore expect that the continuous stream of electrons striking it would gradually build up a negative charge high enough to repel any further electrons. However, the phosphor is also an efficient emitter of secondary electrons. Each time a high-energy electron hits the screen, the phosphor emits not only light, but also one or more other electrons. These secondary electrons drift into the vacuum inside the tube and immediately are attracted to the high positive voltage on the Aquadag coating. This coating acts as a plate return to drain off the electrons. A d-c path to ground must be supplied in the high-voltage supply.

Many kinescopes feature a metal-backed, or aluminized, screen. This means that a very thin layer of metallic aluminum is deposited chemically behind the phosphor. This backing serves two purposes: It increases the light output from the tube, and eliminates ion spot.

About half the light emitted from any spot on the screen radiates directly back into the tube and serves no useful purpose. The other half of the light radiates forward, but about 15 or 20 percent of this is absorbed by the glass in the face-plate, so that only 30 or 35 percent of the light emitted by the phosphor can be seen by the viewer. The metal backing on the phosphor is so thin that electrons can easily penetrate it to reach the phosphor with no appreciable loss of energy, but it is thick enough to reflect the light which would otherwise be directed back into the tube. Thus the aluminized screen gives a much brighter spot than screens having no backing.

Also, gaseous ions, which are much larger than electrons, cannot pass the metal backing and no ion spot can be formed. Tubes which have aluminized screens normally do not need ion traps.

Filterglass Faceplate. – Another feature of many kinescopes is a filterglass faceplate, which is used to increase contrast. *Contrast* refers to the difference between points of maximum and minimum brightness on the screen. For high contrast all parts of the original scene which are black should appear as black as possible on the kinescope screen, and white parts of the scene should appear as white as possible. Even with a very bright kinescope, the picture will appear dull or flat if there is not sufficient contrast.

The filterglass faceplate improves contrast by reducing halation. Some of the light emitted from a spot on the phosphor is reflected back by the outer surface of the glass tube face and reflected forward again by the inner surface, as shown in Fig. 38-27. If the electron beam is stationary, this reflected light appears as a halo around the bright spot where the beam is striking. Usually the halo has a sharply defined inner edge one or two inches in diameter and a poorly defined outer edge. Sometimes a second halo appears outside the first.

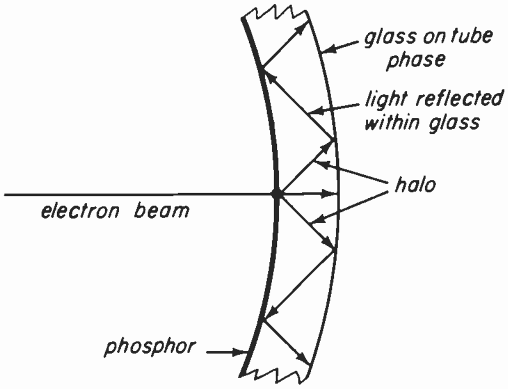

Fig. 38-27

When the beam is scanning the raster, the halo moves with it and cannot be seen. However, the stray light which it causes is still present, and makes the general background of the picture brighter. Fig. 38-27 shows that the reflected light which causes halation must pass through a greater amount of glass than the light which goes directly to the viewer. The light transmitted by the filterglass decreases very rapidly with the amount of glass it must pass through. Thus the direct light, which passes only through the thickness of the faceplate, loses very little of its intensity, while the reflected light is very much attenuated and the halation is correspondingly reduced.

Etched Glass Faceplate. – Another factor which greatly affects picture contrast is reflection of room light from the kinescope face. If the television receiver is in a room with a fairly high light level, much of this outside light may be reflected toward the viewer along with the light from the phosphor. This makes for bad contrast because the dark parts of the screen reflect well. An etched or frosted faceplate reduces this stray reflection so that better contrast can be obtained even with normal room lighting.

TYPICAL KINESCOPES

38-6. Almost all television receivers now being manufactured use kinescopes ranging in size from 14 to 22 inches. Most older postwar sets used 10- and 12-inch tubes, and a few receivers using 7-inch electrostatically deflected kinescopes are still in use. At the other extreme, 25- and 30-inch tubes are being manufactured for more elaborate home receivers. In all, there are roughly 75 different types of kinescopes currently being made and used in home television receivers.

The tube number aids greatly in identifying kinescopes, since it tells several important things about the tube.

Consider the 16GP4-A, for example, a frequently used kinescope. The first number, 16, is the approximate tube diameter in inches. In the case of rectangular tubes, this number applies to about the nearest half-inch, and should not be used as a mounting dimension.

The first letter, G in this case, distinguishes the tube from others of the same general size and is assigned in more or less alphabetical order to each new tube type as it is developed.

P4 indicates the type of phosphor that is used in the fluorescent screen. This is the same for all kinescopes. It is white with medium persistence.

The letter following the hyphen, A, B, C, or D, indicates variations in the faceplate in tubes which otherwise have the same number. Thus the 16GP4 has a faceplate of filterglass, while the 16GP4-B has a frosted or etched faceplate in addition to the filterglass. Kinescopes which have the same number except for this last letter are interchangeable in all respects.

Basing Diagrams. – Another aid for identifying kinescopes is the basing diagram. Like basing diagrams for other types of electron tubes, this shows the electrical connections to the tube. Figure 38-28 shows the three most common basing diagrams used for kinescopes.

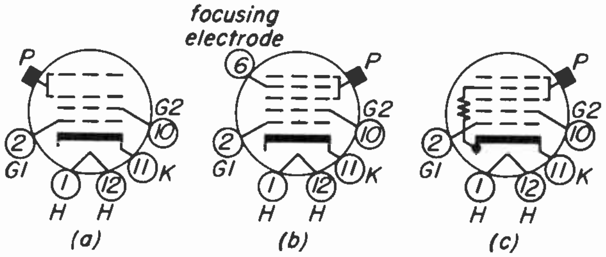

Fig. 38-28

Diagram *a* is for an electromagnetic-deflection magnetic-focus kinescope. Pins 1 and 12 are the heater connections; pin 11 is the cathode; pin 2 is grid number 1; and pin 10 is the first anode. Connection to the second anode is made to a special socket on the cone of the envelope. All magnetic-focus kinescopes in common use employ this arrangement except the 10MP4, 12CP4, 12VP4, and 12WP4.

Electrostatic-focus tubes require a connection for the focusing electrode, and therefore have a somewhat different basing diagram. Both high- and low-voltage focus tubes use diagram *b*. This is the same as diagram *a* except that the added electrode is shown to be connected to pin 6 on the base.

Diagram *c* is for the self-focus type of kinescope. This shows the same electrodes as diagram *b*, but the focusing electrode, instead of connecting to pin 6 on the base, is shown as connecting to the cathode internally through a resistance. The other electrodes have the same connections as in the other two diagrams.

The basing diagram is useful only for making electrical connections to the tube. It does not show any other important features such as type of envelope, type of ion trap, faceplate, deflection angle, or electrical characteristics.

Tube Envelopes. – Kinescopes are also classed according to the type of envelope. This classification is divided into two groups: the shape of the envelope, and the type of construction.

Round kinescopes have circular faceplates. Because the picture itself is rectangular, the entire area of the round faceplate is not used; there must always be a certain amount of unused space on each side of the picture if the full raster is to be displayed. To eliminate this waste, many picture tubes are made with a rectangular faceplate that is nearly the same shape as the picture. These rectangular tubes, while more difficult to manufacture, provide a great saving in cabinet space. This is shown in Fig. 38-29.

The construction of a kinescope may be all glass or a combination of metal and glass. Either of these types may be rectangular or round. In the metal tube, the conical section between the neck and the faceplate is made of steel. Metal tubes are much lighter in weight than glass tubes, and are cheaper to manufacture because the metal cone is easily produced by a spinning process. The metallic cone also provides a good magnetic shield for the electron beam so that stray magnetic fields are less likely to distort the picture. Also, metal tubes are less fragile than glass tubes, and even if they should break, there is less danger from flying glass.

The disadvantage of metal tubes is that the high second anode voltage must be applied to the exposed metal shell. It is also possible for the metal shell to become permanently magnetized in spots if located too near a magnetic field. Such magnetism shows up as picture distortion, usually near the edges of the picture.

In glass tubes the hazard of the exposed second anode voltage is eliminated. Most glass kinescopes have an outer coating that is a good conductor. The Aquadag coating inside the kinescope and the outer conductive coating, separated by the glass, make an excellent capacitor. If the outer coating is grounded, this capacitor serves as a filter for the high-voltage supply. It also can hold an appreciable charge, even if the kinescope is completely disconnected from the receiver. Always ground both the outer coating and the high-voltage terminal of a kinescope before handling it.

KINESCOPE CHARACTERISTICS

38-7. Tube handbooks list a number of characteristics for kinescopes. These may be divided into electrical and mechanical characteristics.

Electrical Characteristics. – We have already discussed most of the important electrical characteristics. These are: deflection angle, focusing method, capacitance between inner and outer coating, type of ion trap used, focusing current or voltage, maximum and typical operating voltages, and control-grid extinction voltage. Heater voltage- and current-ratings and interelectrode capacitances are also given.

Maximum-voltage ratings are given for the first and second anodes and for the control grid. If these voltages are exceeded when the tube is installed in the receiver, the life of the kinescope will be greatly shortened. It is especially important that the maximum second anode voltage of larger kinescopes be kept within the tube's rating. With more than 15,000 volts the electrons have enough energy when they strike the kinescope

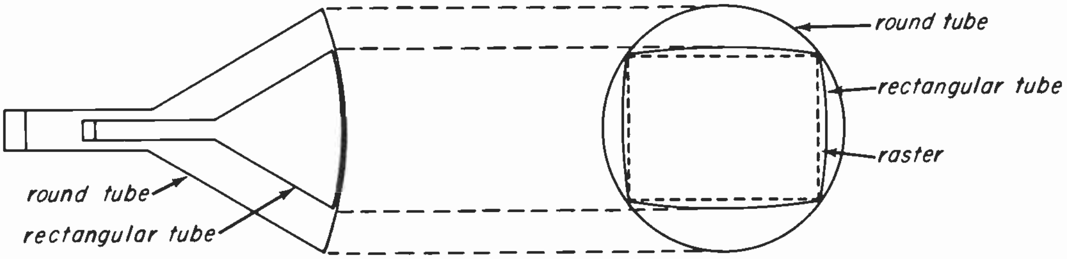

Fig. 38-29

screen to produce appreciable amounts of X-Rays.In general a thick kinescope faceplate provides adequate shielding. However, these may be harmful to an unshielded observer closeby, exposed to them over a period of time.

Typical operating voltages are also given in the tube handbooks. These are lower than the maximum voltages and in general are the best voltages for operating the tube, although in different receivers they may vary somewhat.

Mechanical Characteristics. – Also listed are a number of mechanical characteristics which are important when replacing one tube type with another. These are: dimensions of the tube face, over-all length, construction of the envelope, type of anode terminal, type of faceplate, basing diagram, and mounting position.

The tube-face size is given in maximum outer dimensions, and indicates whether the tube is round or rectangular. In addition, the size of the fluorescent screen, which is somewhat smaller, is given. In some cases, the kinescope must be mounted in a certain position with respect to the vertical, and this is specified.

Following is a list of kinescope characteristics as they might appear on a typical tube data sheet. Data for the 16GP4 are used since this is one of the more commonly used kinescopes.

Heater voltage (ac/dc)	6.3 volts
Heater current	0.6 ampere
Maximum Ratings	
Anode voltage	14,000 kv max.
Grid No. 2 (first anode)	410 volts max.
Grid No. 1 (control grid)	
Negative bias value	125 volts max.
Positive bias value	0 max.
Positive peak value	2 volts max.
Peak Heater-Cathode voltage	
Heater negative with rrspect to cathode:	
During warm-up period	410 volts max.
After warm-up	150 volts max.
Heater positive with respect to cathode	150 volts max.
Typical Operation	
Anode voltage	12,000 volts
Grid No. 2 voltage	300 volts
Grid No. 1 voltage for visual extinction of undeflected focused spot	-33 to -77 volts
Focusing coil current (dc approx.)	100 ma
Field strength of single-pole ion trap magnet	45 gausses
General	
Faceplate	Filterglass
Fluorescence and phosphorescence	White
Persistence of phosphorescence	Medium
Focusing method	Magnetic
Deflection method	Magnetic
Ion trap gun	Requires single external magnet
Deflection angle	70 degrees
Maximum over-all length	17-11/16"
Greatest diameter	15-7/8"±1/8"
Screen diameter	14-5/8"
Mounting position	any
Base	Small-Shell Duodecal 5-Pin

In addition to this information, the data sheet specifies the type of focus coil that should be used with the tube. Frequently specifications for the high-voltage power supply are given, so that there will be no damage to the kinescope or supply in case of a short circuit.

Always consult the data sheet when replacing a kinescope with another of a different type, to be sure it will work in the circuit.

INSTALLING THE KINESCOPE

38-8. Kinescopes are remarkably durable if properly handled, and do not have to be replaced often. But troubles do occur, and faulty tubes must be replaced. If the new kinescope is of the same type as the old one, replacement consists simply of putting in the new tube and adjusting the ion trap, focusing, and centering.

However, sometimes an exact replacement cannot be obtained, or the set owner wants a larger kinescope installed. Such tube changes are more difficult, and give rise to a number of problems.

Mechanical Problems – The first thing to consider is cabinet size. The larger tube must fit inside the cabinet, or a larger cabinet must be provided. Many sets have cabinets which allow enough room for a kinescope slightly larger than the original. In this case, the opening in the front of the cabinet must be enlarged for the larger tube. Sometimes this can be done simply by installing a larger tube mask in the front of the cabinet. Usually however, a new protective window is also required.

If the new kinescope is too long for the cabinet, the socket end can be allowed to extend an inch or so beyond the back of the cabinet. A metal or fiber cup must then be mounted over the tube base for protection. This should be done only as a last resort since, even with the protective cup, the kinescope may be damaged if the set is moved.

When a larger kinescope is installed, a new mounting arrangement usually must be provided. Kinescopes are supported in two places: by a saddle or cushioning arrangement at the screen end and by the deflection yoke. Never use the socket end of the kinescope for support.

Metal kinescopes must be supported at the screen end by insulators because the metal shell which carries the high voltage extends to the outer rim of the tube face. Rectangular, metal-shell kinescopes are usually supported at the corners by insulators. Round, metal-shell tubes are usually supported by an insulator ring which fits around the rim of the tube face. The supporting insulators must be able to withstand the full second-anode voltage.

A number of different mounting arrangements are available for glass kinescopes. Most of these have some sort of cushioning device at the screen end of the tube to protect the tube from jarring or rough handling during shipment.

All kinescopes must have a protective viewing window mounted in front of the viewing screen to avoid damage to the tube face and to keep out dust. This window may be either glass or clear plastic.

High-Voltage Problems. – Corona formation must be considered when installing a kinescope. Corona is an electric discharge which appears on the surface of a conductor when the voltage between the conductor and nearby conducting material is higher than the breakdown voltage of the air space between them. It causes ozone to be formed, and this in turn deteriorates the insulating materials. If sharp edges or points are present, the possibility of corona is greater, and arcing may occur at such edges or points. If the corona is severe, it is visible as a bluish glow when the room is darkened, but it can cause damage without being visible.

Corona can be avoided by a few simple precautions. Avoid any sharp edges or points on or near high-voltage conductors. Do not splice the high-voltage lead if it is not long enough for the new tube, but replace the entire lead. Be sure that the high-voltage lead is dressed neatly with no exposed stray wire.

The metal rim on metal kinescopes is rounded to prevent corona. This rim, mounted on the supporting insulators, should be spaced from any grounded elements in the receiver by at least one inch. Similarly, all other parts of the metal cone should have at least one inch of air space between them and other metallic parts of the receiver. Deflecting-yoke surfaces on the side toward the metal cone should be smooth.

Dust collected around the anode cap of glass kinescopes and on the supporting insulators of metal kinescopes can reduce the insulating qualities of these parts, especially when the humidity is high, increasing the possibility of corona formation. The tube must be kept free from dust. This is best done by using a mounting arrangement which has a dust seal.

Other contamination, especially fingerprints, can also cause corona. Keep the kinescope as clean as possible during handling and installing. The surfaces of kinescopes, both glass and metal, and the supporting insulators, may be cleaned with soapless detergents, then rinsed with clean water and dried immediately. Do not use cleaning agents which might dissolve or otherwise injure the coated surfaces.

Conductive Coatings. – If a kinescope having an external conductive coating is used to replace another with no coating, the added capacitance of the coating may make the total capacitance too high for the circuit. For second-anode voltages of 12,000, 14,000, 16,000, and 18,000 volts, the maximum allowable values of filter capacitance are 2,500, 2,000, 1,500, and

750 micromicrofarads, respectively. When installing a new kinescope, check the value of the filter capacitor in the receiver to see that its capacitance plus the capacitance of the tube coating does not exceed these values. If the total is too large, remove the capacitor in the receiver or replace it with one of lower value.

When a kinescope without an outer coating is used to replace another that has a coating, a filter capacitor must be added. The same values for maximum capacitance as given in the preceding paragraph may be used as a guide. The capacitor must have a sufficiently high voltage rating to withstand the second-anode voltage.

If a metal kinescope is used to replace one having an external coating, a filter capacitor must be added.

The external coating on coated kinescopes must be firmly grounded. This is usually done by a contact arm which extends from the deflection yoke mounting. The arm should give at least one-quarter square-inch of good contact. If a metal tube is installed, this contact arm must be removed even if it only touches the glass part of the glass funnel, because it will reduce the high-voltage path to ground of the metal shell.

Component Problems. – Usually, kinescopes that are in the 50- to 60- degree deflection angle group can be deflected by any yoke designed for a kinescope in that group. Similarly, those in the 66- to 70-degree deflection angle group usually require no new yoke if replaced by another kinescope within the group.

Frequently a tube from the larger-angle group is substituted for one in the smaller-angle group. In this case a new deflection yoke must be used. In addition, it is usually necessary to make changes in the high-voltage supply, in both the vertical- and horizontal-deflection circuits, the focusing system, and sometimes in the low-voltage supply. Conversions of this type vary from set to set and it is necessary to consult conversion data for the particular receiver.

ADJUSTMENT OF COMPONENTS

38-9. When installing the new kinescope, first be sure that it fits well mechanically. Never use force in putting the tube in place, and never allow any of the mounting attachments to put undue force on the tube. The leads to the tube socket should have enough slack that they put no strain on the neck of the tube.

Component Lineup. – The deflection yoke, which helps to support the kinescope, is mounted on the neck of the tube and fits close to the cone. Next to the yoke, in magnetic-focus tubes, is the focusing device, which may be any of the magnetic types discussed. This is usually supported by the deflection-yoke housing, and should be separated from the yoke by about one-half inch. This distance will be slightly less if measured from the yoke housing. Next is the ion-trap magnet, which is placed about one-quarter inch from the base of the tube.

With electrostatic-focus tubes, the lineup of components is the same except that the centering device replaces the focusing device.

Adjustment Procedure. – The ion-trap adjustment, as explained in the section on ion traps, is made first. It may be necessary to repeat the final ion-trap adjustment after the other components have been adjusted. However, the ion-trap magnet must be used only according to instructions, and never as an aid in focusing, centering, or width adjustment.

The focusing adjustment is made next. This is best done with a test pattern, but it *can* be done with only a raster. When focusing with a raster, the focusing control should be set to give the best over-all sharpness of the scanning lines. If done with a test pattern, it should be set for best resolution of the narrow ends of the wedges in the pattern.

In the case of magnetically focused tubes, if the raster or pattern cannot be focused, it may be necessary to change the position of the focusing magnet slightly.

When focusing is completed, the picture must be centered and squared up. The first step is to rotate the deflection yoke until either the top or the bottom of the picture is in line with the edge of the tube mask. The yoke is then fastened snugly in place against the cone of the tube, by tightening the thumbnut which holds it. The picture is then centered by adjusting the centering device. The correct vertical and horizontal picture size is obtained by adjusting the size controls.

These picture adjustments are best made with a test pattern, which indicates sharply any incorrect adjustments, but they can also be made with a raster or picture. After the first adjustments are made, all must be given a final touch for best results.

GENERAL PRECAUTIONS

38-10. High Voltages. – While the regulation of high-voltage power supplies in television receivers is usually so poor that contact with the supply is not fatal, *these supplies are dangerous* and may cause serious injury. Before touching any part of the circuit, turn off the power supply switch and ground both sides of high-voltage capacitors and the shell of metal kinescopes. Remember that *high voltages* may be present on *low-voltage circuits* if there is a faulty capacitor or other component.

Handling of Tubes. – Because of the large surface area and high degree of vacuum, a tremendous force exists due to air pressure on the tube. If the kinescope breaks, this force is released suddenly and causes the glass to fly. Therefore, great care must be used in handling.

Wear goggles and gloves when handling kinescopes.

Do not handle a kinescope by its neck.

Do not exert more than moderate pressure when installing a kinescope.

If a tube does break, and you get cut, wash the cut carefully to remove all dirt and glass particles. The coatings used on kinescopes are not generally poisonous, but you might have an unusual allergy.

Keep kinescopes in their cartons when not in use. They may roll from a table, or the faceplate become scratched. Never place the kinescope face down, except on a surface protected by felt or similar material.

The best way to dispose of a worn-out kinescope is to place it in a carton, seal the carton, and drive a heavy tool, such as a crow-bar, through the top of the carton.

PART II – KINESCOPE TROUBLES

This section will cover defects within the kinescope itself and troubles related directly to the operation of the picture tube.

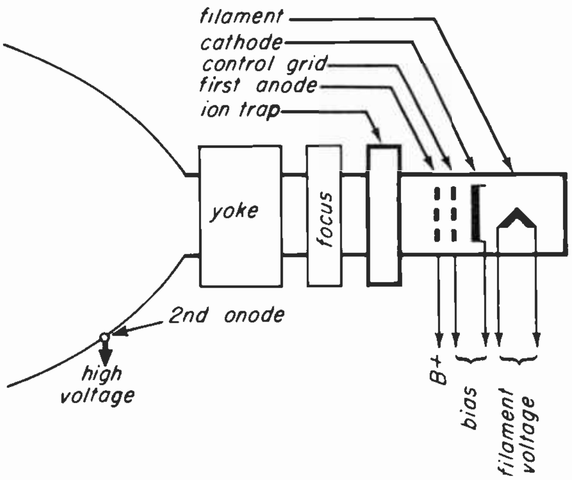

Fig. 38-30

NO BRIGHTNESS

38-11. Shown in Fig. 38-30 is a diagram of an electromagnetic kinescope. All the parts drawn in heavy lines must be functioning properly in order for brightness to appear on the screen. These include everything except the focus magnet and the deflection yoke. If the yoke were defective, (provided the defect did not cause loss of high voltage) the beam would not be deflected but there would still be light on the screen. If the focus magnet were defective the image on the screen would be out of focus but the screen would be lit. No brightness can be caused by a trouble in the following components or circuits for the picture tube.

1. Second Anode
2. Ion Trap
3. First Anode
4. Control Grid
5. Cathode
6. Filament

Localizing No Brightness Troubles. – The diagram of Fig. 38-30 indicates the voltages which must be supplied to the parts of the picture tube that produce brightness. When a no-brightness trouble is encountered the presence of each of their voltages can be checked. If all of the operating voltages are present and have the correct value, and if the ion trap is not faulty the kinescope tube has an internal defect. These conditions will now be considered separately except for the filament which can be easily checked as a cause of no brightness. You can look to see if the filament is lit, check filament continuity with an ohmmeter and measure the a-c filament voltage.

Second Anode. – In receivers having a flyback or r-f power supply high voltage at the second anode can be checked by momentarily arcing the anode lead to chassis ground. If no arc is obtained then no high voltage is present. It should be noted that B+ is usually present on the second anode and will cause a small spark even though no high voltage exists. DO NOT MAKE THIS TEST ON RECEIVERS EQUIPPED WITH A 60-CYCLE HIGH VOLTAGE SUPPLY. These power supplies are capable of delivering current and maintaining high voltage output under load. For this reason a shock from a 60-cycle high voltage power supply could cause death. Methods of localizing the cause of no high voltage are treated in the lesson on deflection circuits.

Ion Trap. – Improper positioning of the ion trap magnet can cause the beam to be deflected away from the flouresent screen, thereby preventing brightness. If the trap is placed backwards on the neck of the tube, the screen will light when the trap is rotated 180° from its normal position. This is shown in Fig. 38-31. Almost any type of PM ion trap (single or double magnet) will work with any picture tube. PM ion traps are not troublesome except in regard to positioning. However, the coils in EM traps can develop internal open circuits or shorted turns. Defects in EM traps often do not appear until the trap has heated up. For instance, the brightness might fade out after the set operates for 20 minutes. EM traps can be checked for trouble by substituting a PM trap.

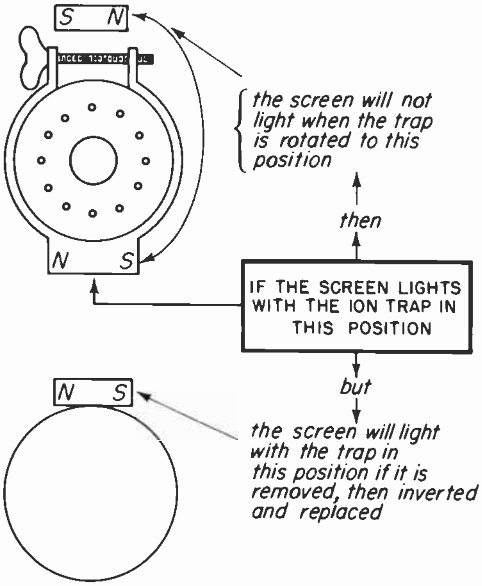

the screen will not light when the trap is rotated to this position

then

IF THE SCREEN LIGHTS WITH THE ION TRAP IN THIS POSITION

but

the screen will light with the trap in this position if it is removed, then inverted and replaced

Fig. 38-31

First Anode. – The first anode potential must be approximately 300 volts more positive than the cathode in order for brightness to appear. The connection to the first anode is a pin at the picture tube base. Therefore, B+ for the first anode can be measured by inserting the voltmeter probe into this proper hole in the kinescope *socket*, with the other meter lead grounded to chassis.

Fig. 38-32 illustrates the first anode decoupling network, consisting of the isolating resistor R and bypass condenser C. The bypass condenser keeps

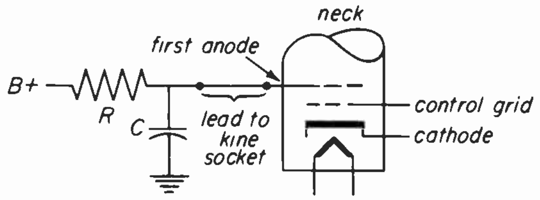

Fig. 38-32

the anode at ground potential for all frequencies of the video signal (30 cps to 4 mc). The condenser has the same function as the screen grid bypass condenser found in a pentode amplifier. When B+ is absent from the first anode a shorted bypass condenser is often the trouble. A shorted circuit here may cause the resistor to burn.

Control Grid – Cathode. – An open cathode circuit results in no brightness because the picture tube is then unable to conduct anode current. Aside from this condition, the grid and cathode have to be considered together. The grid-cathode bias voltage controls the intensity of the light on the screen by controlling the kinescope conduction in the same way that the grid bias controls the conduction of an ordinary amplifier tube. There will be no brightness when the voltage at the grid is approximately 50 volts negative with respect to the cathode. Fifty volts is a representative kinescope grid cutoff potential. The exact cutoff voltage of a particular kinescope type will vary slightly from this value. Because the grid bias is relative to the cathode, the picture tube can be cut off in two ways: 1. By a *positive* voltage at the *cathode* with respect to ground which is greater than cutoff bias (+ 50V). 2. By a *negative* voltage at the grid with respect to ground which is greater than cutoff bias (– 50V).

No Control over Brightness. – Since the brightness is controlled by varying the control grid bias, a trouble that causes inability to reduce brightness must be located in the grid-cathode circuit of the kinescope. Brightness is maximum when grid bias is zero with respect to the cathode. Therefore, inability to reduce brightness means the brightness control cannot increase the bias to a sufficiently large negative voltage. The range might still be about 50 volts.

The kinescope bias can be measured by inserting a voltmeter probe in the proper hole in the tube socket. However, if abnormal bias is the result of an internal short within the kinescope, the meter reading will be normal with the socket removed from the picture tube base. This possibility of error can be avoided by measuring the bias at a wiring tie-point under the chassis, with the tube socket in place. If the bias measured at the tie-point is low but returns to normal when the socket is removed then we know the picture tube is defective.

TROUBLESHOOTING PICTURE TUBE GRID CIRCUITS

38-12. Incorrect bias in the kinescope grid circuits can produce two possible symptoms: (1) no brightness, (2) no control over brightness.

No brightness means a *high value* of negative grid voltage with respect to the cathode; *no control* over brightness means a *low value* of negative grid voltage or a positive grid voltage. In addition, loss of synchronization sometimes accompanies the trouble of no control over brightness; this can happen when the sync takeoff point is at the kinescope grid.

The kinescope grid and cathode circuit must be capable of responding to the full frequency range of the video signal, from 30 cps to 4 mc. For this reason certain component failures in the kinescope grid-cathode circuit can pause picture smear in the same way that defects in the video amplifier cause smear. Such failures need not alter the bias voltage. An example is an open coupling condenser from the video output tube plate to the kinescope grid.

A less obvious component failure capable of producing smear is an open condenser in the signal return circuit of the kinescope. Referring to Fig. 38-33, C131 is the signal return path from the kinescope cathode to the video output tube plate load. Fig. 38-34 is a simpli-

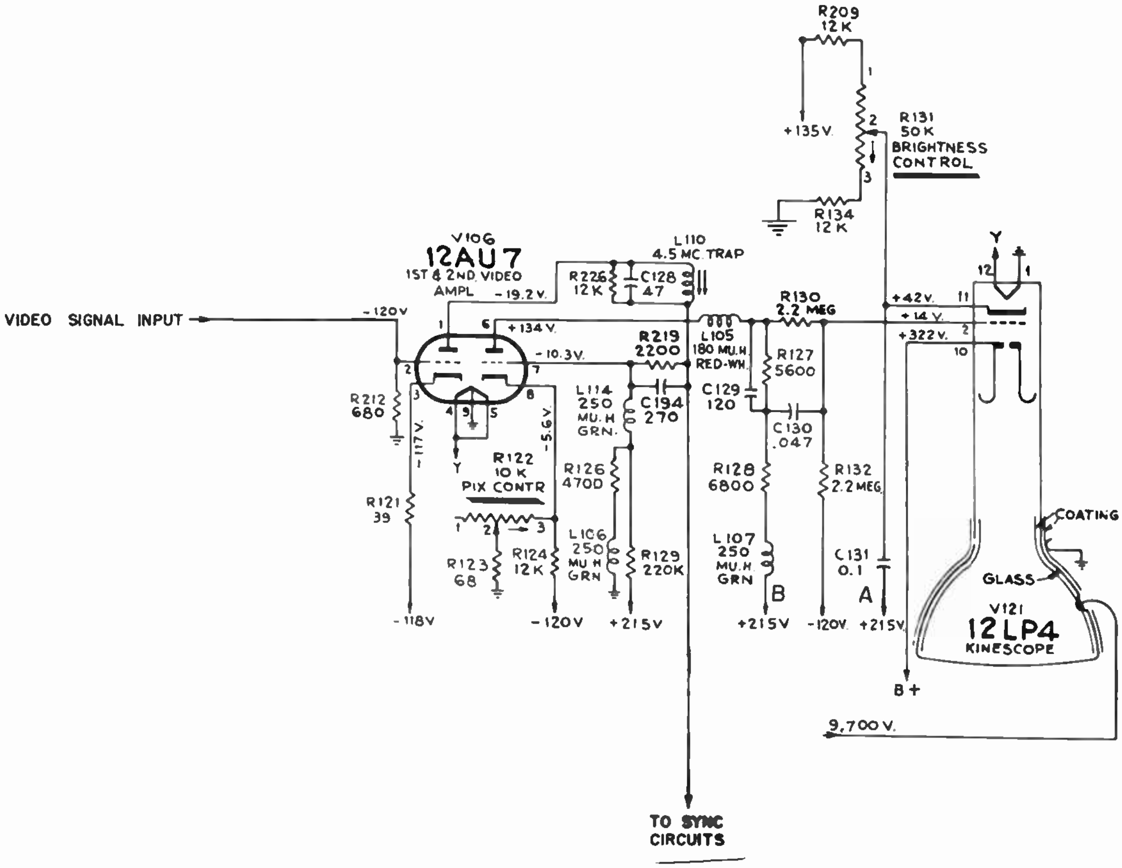

Fig. 38-33

fied diagram illustrating the position of this condenser in the signal path. Note that in the schematic diagram in Fig. 38-33 the condenser is shown returned to +215v at point A. The video output tube plate load is also returned to +215 v at point B, so that the condenser is electrically connected from the kinescope cathode to point B. If this condenser opens the signal return path is through the power supply, which does not have equal response to all the video frequencies. The result is picture smear.

If the signal return (bypass) condenser C131 were shorted there would be no brightness because +215 volts would be applied to the cathode which would cut kinescope beam current.

The circuit shown in Fig. 38-34 is direct-coupled; the plate of the video amplifier is connected directly to the grid of the kinescope. No blocking condenser is present. Therefore, the kinescope grid bias depends upon the conduction of the video output tube. If the conduction became excessive, the kinescope grid voltage would become less

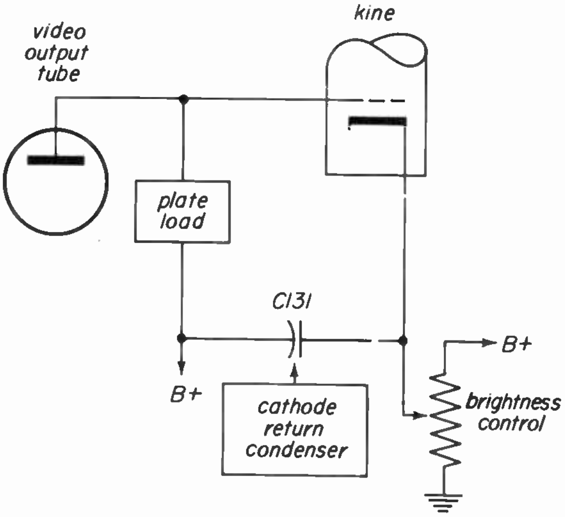

Fig. 38-34

positive. Excessive conduction in the video output tube can cause no brightness, therefore, in circuits where the video amplifier is directly coupled to the kinescope grid.

In summary, trouble in the kinescope control grid-cathode circuit is capable of producing the following four symptoms: (1) no brightness, (2) no control of brightness, (3) no sync, (4) picture smear.

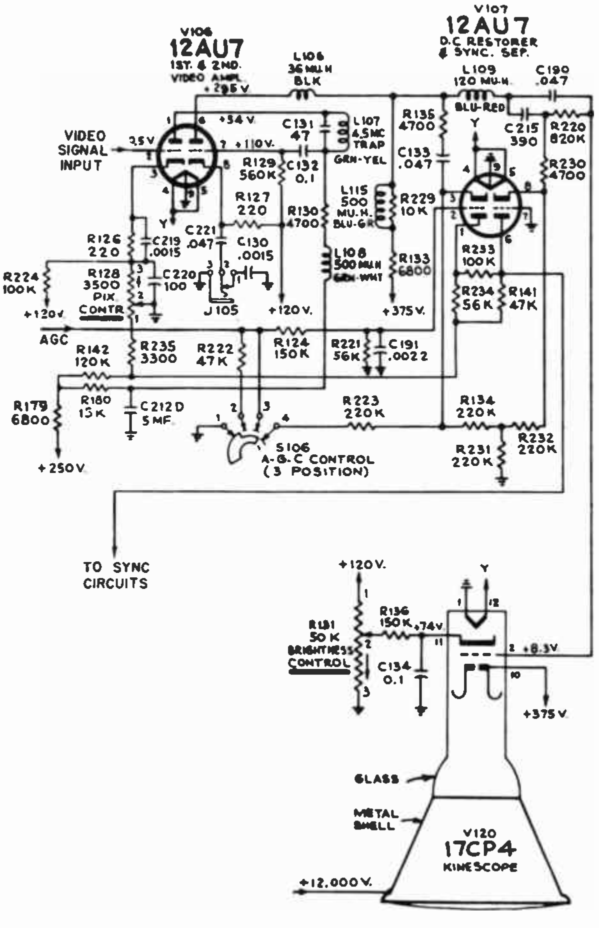

Fig. 38-35

Fig. 38-35 is a part of the schematic diagram of another receiver circuit, showing the video amplifier, the sync takeoff and the kinescope. We'll use this diagram to illustrate an example of troubleshooting a receiver having no control over brightness.

1. Measure the grid and cathode voltage to see which is at fault. The cathode voltage should be +120 volts when the brightness control is turned to the no-brightness position (full counterclockwise rotation). The grid should *not* be much *more positive* than the +8.3 volts shown.
2. Remove the kinescope socket to see if the voltage returns to normal, as a check on the kinescope.
3. If the cathode voltage is low (close to zero volts)
   (a) measure on the center arm of the control. If the voltage is normal here then C134 is shorted.
   (b) If the voltage at the control arm is also low:
      (1) There could be a short from the arm to ground.
      (2) The +120 volt supply could be low.
      (3) The resistance element in the control could be open at point 1.

Note that trouble in the cathode would not affect the sync.

4. If the grid is excessively positive, check C190 and C215 for leakage. Leakage in either of these condensers would apply +295v (plate voltage of the video output tube) to the kinescope grid. Note that leakage in these condensers could cause loss of sync.

HIGH VOLTAGE BUZZ AND SMEAR

38-13. The kinescope beam current is not constant but varies in intensity according to variations in control grid voltage. The variations in control grid voltage correspond to the instantaneous changes of picture and sync information. This action is the same as occurs in a conventional vacuum tube amplifier. Therefore, the variations in kinescope current can cause voltage variations to occur across any resistance in series with the second anode. Such resistance is sometimes present in the high voltage power supply as a result of a circuit defect. This is the cause of a trouble that produces sync buzz and smear.

In the case of a glass kinescope, buzz and smear can be caused by ungrounding the outer coating. To see why this is so refer to Fig. 38-36. At *a* is shown a high voltage power supply for a glass kinescope. The output filter capacitor of the power supply is formed by the capacitance between the inner and the outer coatings

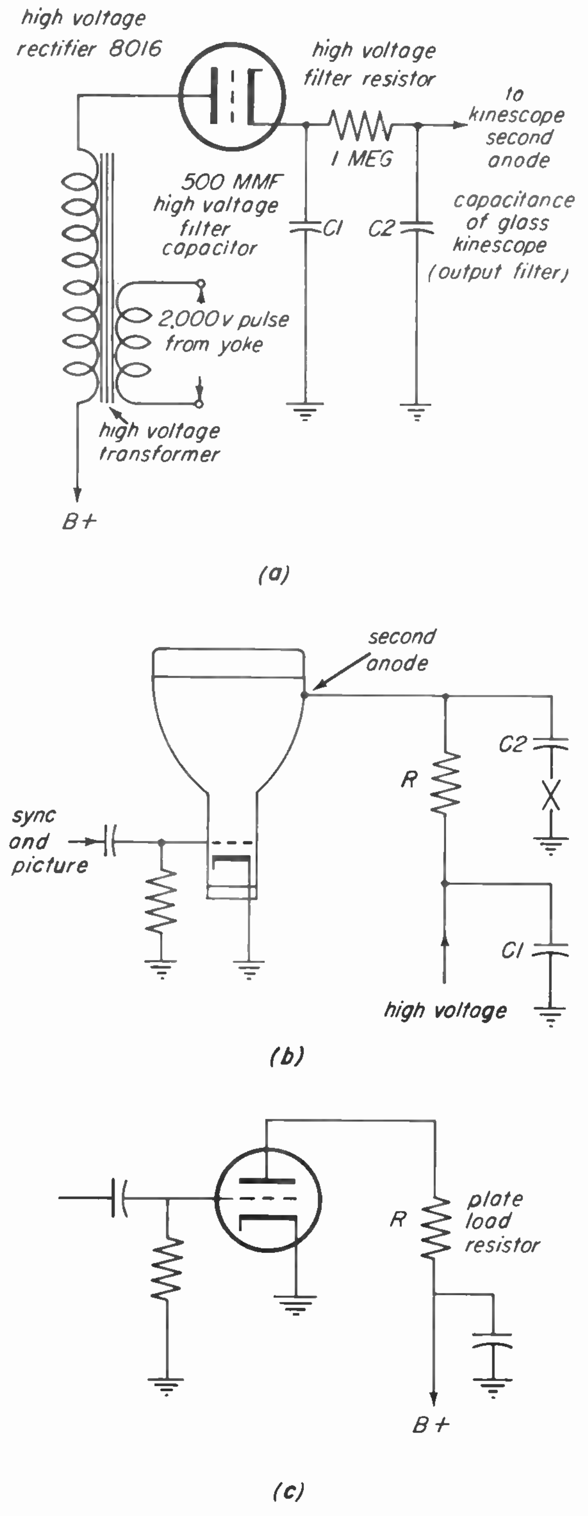

(a)

(b)

(c)

Fig. 38-36

of the kinescope. The high voltage connects to the inner coating. The outer coating is grounded to the chassis by some kind of spring clip. This capacitance is represented by C2 in the diagram.

Fig. 38-36 *b* shows what happens when the outer coating is not grounded. With C2 open the only ground return for *variations* (a-c component) of the kinescope beam current is C1. R is in series with the kinescope second anode and the a-c ground at C1. Therefore R acts as a plate load resistor for the kinescope. This can be understood by comparing the diagram of the kinescope circuit (with C2 opened at point X) with the diagram at C, which shows a conventional triode amplifier circuit. Large voltage variations corresponding to the vertical sync signal exist across R. These voltage variations are present at every point on the kinescope outer coating with respect to ground. They can be picked up by nearby audio circuits and heard as buzz in the sound.

Smear Due To Ungrounded Kinescope Coating

Fig. 38-37

Fig. 38-37 is a photo of the picture on the face of a glass kinescope with its outer coating ungrounded. Notice the trailing streaks. This type of smear is due to the fact that the impedance of the ground return for kinescope beam current variations is not equal for all video frequencies. The kinescope now has a plate load impedance (R of Fig. 38-36) that is not compensated for frequency response.

Metal kinescopes can also cause buzz. There is no "outer coating" on a metal kinescope but there is usually no filter resistor in the high voltage power supply. The metal part of the tube is directly connected to the high voltage filter condenser which is the ground return for variations in beam current. However, while this condenser forms an a-c ground connected to the metal cone of the tube, it lacks the shielding effects of the outer coating of a glass kinescope. For this reason volume controls and audio leads near metal kinescopes are often fitted with metal shields which must be grounded.

High voltage buzz can be recognized by the following:

1. The loudness of the buzz decreases when the brightness control is turned down.
2. The buzz stops when the high voltage lead is disconnected from the kinescope. This test is easily made with glass kinescopes.
3. The buzz stops when the kinescope socket is removed. With metal tubes this is an easier test than disconnecting the high voltage lead.

Fig. 38-38

Buzz and smear encountered with glass kinescopes due to an ungrounded outer coating are usually caused by wearing away of the coating. A kinescope with a worn spot on the outer coating is pictured in Fig. 38-38.

In this case the cure consists of rotating the tube so that the grounding clips contact the coating rather than the worn spot.

Buzz encountered with metal tubes is usually the result of an open ground connection on the shield protecting some audio component or lead. It is occasionally necessary to shield a component such as a volume control where no shield already exists or to replace an audio lead with shielded wire.

FOCUS TROUBLES

38-14. – For the purposes of this section we will consider troubles which make it impossible to pass through best focus when rotating the focus control. The defects which cause inability to pass through the best focus are different for electrostatic systems and magnetic systems.

Magnetic Focus. – In this case focus depends upon two factors: (1) The strength of the magnetic field; (2) The point along the electron beam where the field acts. Nothing can be done about the strength of field when a permanent focus magnet is used, except to use a new magnet. However, the magnet can be moved back and forth along the neck of the kinescope to vary the point along the beam where the field will act.

The strength of the field produced by an electromagnet is measured in ampere-turns. As this implies, the more turns in the coil, the stronger is the field. Also, the more current that flows in the coil the stronger is the field.

When it is impossible to pass through focus, the first step is to re-position the coil on the kinescope neck in an effort to find a point where the beam can be focused by the available strength of field.

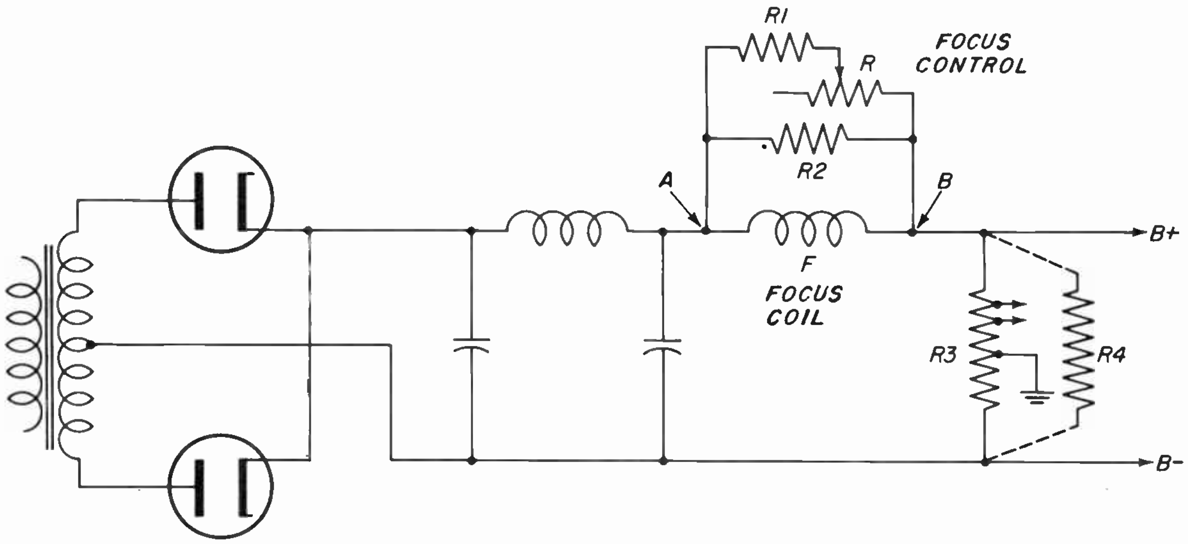

Fig. 38-39

Failing this, the problem is to increase the current flowing in the coil. The trouble could also be due to too much current in the coil so that it would be necessary to decrease the coil current.

Fig. 38-39 is a simplified diagram of a television power supply showing the location of the focus coil (F) and the focus control (R). The focus control is a variable resistance in parallel with the coil. The *total* current flowing between points A and B does not change. It is determined by the load on the power supply. Therefore if any of the parallel resistors (R1, R2) increases in value more current will flow in the coil because less flows in the parallel resistors, while the total is unchanged. It is unnecessary to consider a change in the resistance value of the control because it can be set to any desired value in its range.

Changing the Focus Coil Current. – It is occasionally necessary to change the amount of current in a focus coil although no defects exist in the circuit. This is the case, for instance, when a receiver is converted to a larger screen size. Increased high voltage may be used in the converted receiver, resulting in a more intense beam which requires a stronger magnetic field for focus.

Referring to Fig. 38-39, removing R2 increases the current in the coil. *Removing any resistor in parallel with the coil increases the coil current.* The opposite is also true—adding resistors in parallel with the coil decreases the coil current. If R1 were replaced with a higher value resistor, increased current would flow in the coil because the resistance in parallel with the coil increases the coil current.

Another way of increasing the current in the focus coil of Fig. 38-39 is to place a resistor in parallel with the bleeder resistor of the power supply. R3 is the bleeder and R4 is the added resistor. Two precautions should be observed.

1. The added resistor should not be of such a low value that the increased current would overload the receiver transformer or rectifier tubes.
2. The added resistor should be connected across the entire bleeder from the full B plus point to B minus, as in Fig. 38-39. This is to avoid changing the division of voltage at intermediate taps.

A typical resistor for this purpose is 20,000 ohms, with a 10 watt power rating. This value is safe for most power supplies.

A test is available to determine whether inability to pass through focus is the result of too much or too little current in the coil. Basically the idea is that if focus is most nearly reached when the control is set for maximum resistance then there is not enough current in the coil. This can be understood if we consider that if the control could be turned a little more we would reach focus. Turning the control more in the same direction would mean a further increase of parallel resistance and more coil current. If focus is most nearly reached when the coil is set for minimum resistance then there is too much current in the coil.

To make this test, rotate the control in the direction which approaches focus. Note the direction. Then, turn off the power. Connect an ohmmeter from the control's center arm to the end terminal which is connected to the focus coil. Now, rotate the control in the same direction that approached focus. If the resistance reading increases, not enough current is flowing in the coil. If the resistance reading decreases too much current is flowing in the coil.

Electrostatic Focus. – Electrostatic focus is reached when the proper voltage is present at the focusing element within the kinescope. We can divide electromagnetic tubes employing electrostatic focus into two categories:

1. Those which require high voltage at the focus element. That is, a voltage greater than that available from the low voltage power supply.
2. Those which focus with a low voltage. The focus voltage for these tubes is obtained from the low voltage supply.

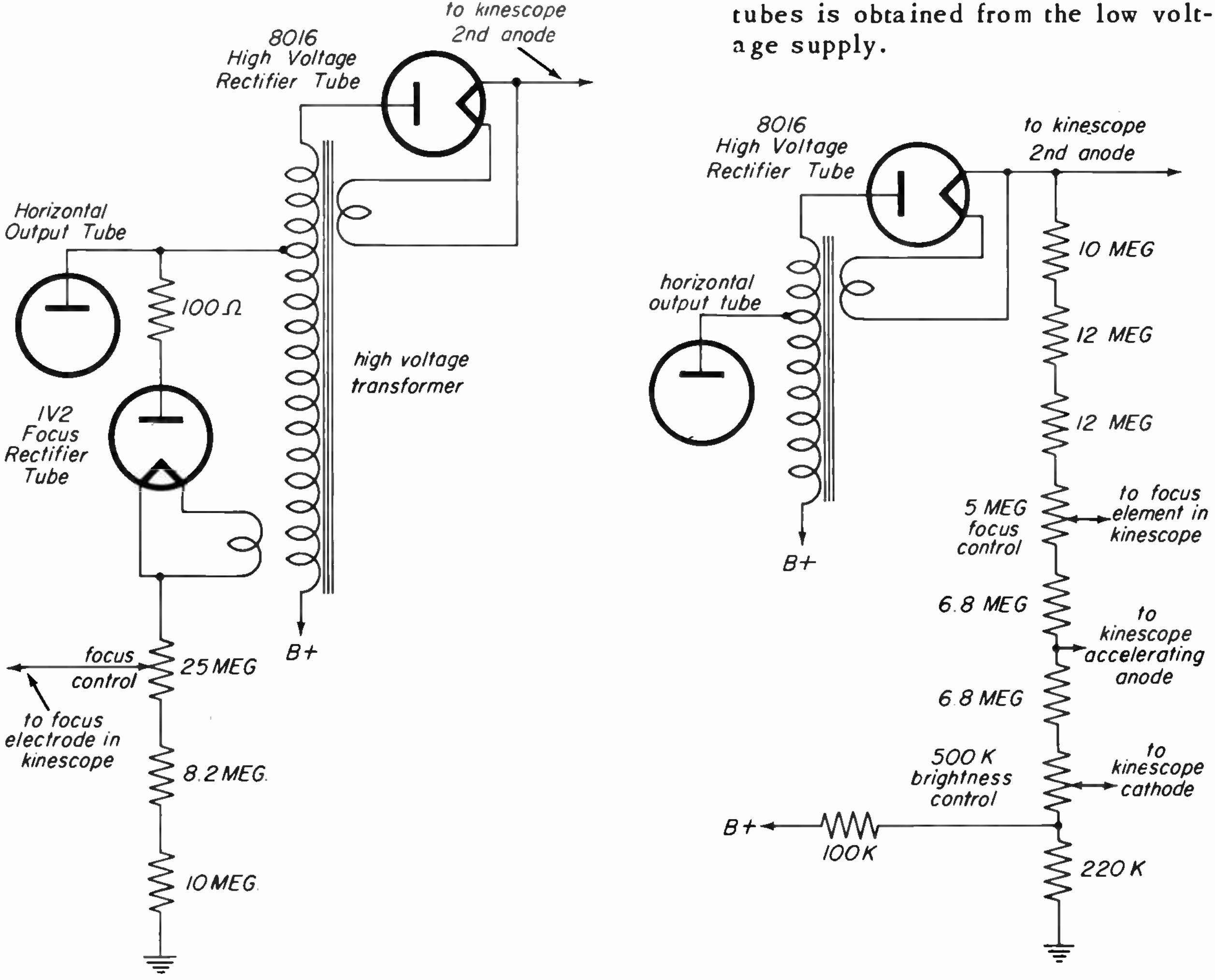

(a) (b)

Fig. 38-40

The high voltage for focusing in kinescopes of the first category is obtained from the high voltage power supply and involves a high resistance bleeder which is a source of focus troubles.

Fig. 38-40 *a* and *b* show two circuits which are representative of arrangements used to provide high voltage for focus. In *a* the separate rectifier is used to obtain focus voltage. At *b* focus voltage is tapped off a bleeder connected from the kinescope second anode voltage to ground.

Notice that if the separate focus rectifier tube fails, focus can be lost while brightness is not impaired. Also a changed value resistor in the bleeder of the circuit at *a* would not affect the brightness.

If a resistor changes value in the circuit at *b*, brightness as well as focus can be affected because the bleeder supplies voltage for the kinescope accelerating anode and the brightness control, as well as for the focusing electrode. Shorts can cause no brightness in either circuit *a* or *b*.

If focus cannot be reached because not enough focus voltage is supplied to the kinescope, this means that a bleeder resistor at the high voltage side of the focus control has increased in value. In the case of a separate rectifier, this could also mean that the tube has low emission and therefore its internal resistance has increased.

If focus cannot be reached because too much focus voltage is applied to the kinescope, then a bleeder resistor on the low voltage side of the control has increased in value.

To decide whether inability to reach focus is due to excessive voltage or too little voltage note the direction in which the control must be rotated to approach focus. Now turn off the power. Place an ohmmeter across the focus control. Connect one meter lead to the center arm and the other to the end terminal which is the *low voltage* side of the control. Rotate the control in the direction that approached focus. If the resistance increases then not enough voltage is available; a resistor on the high voltage side has increased in value. If the resistance of the control decreases, too much voltage is supplied; a resistor on the low voltage side has increased.

This test localizes a changed value of resistance to either the high voltage side of the control or the low voltage side. After this, fixing the trouble is often a matter of replacing the few suspected resistors one at a time. There are two reasons for this: (1) the resistors that have increased cannot easily be detected unless an ohmmeter with an R x 1 megohm scale is available; (2) frequently more than one resistor has increased in value.

Fig. 38-41

Stray Magnetic Fields. – Fig. 38-41 is a photograph of a picture pulled out of shape by the deflecting action of a stray magnetic field. Such fields are produced when a magnet is in the vicinity of the kinescope. For example, if a loudspeaker were mounted too close to the picture tube the picture could be distorted as shown in Fig. 38-41. This could also happen if the cone of a metal kinescope becomes magnetized.

KINESCOPE INTERNAL DEFECTS.

38-15. – Internal defects in the picture tube include low emission from the cathode, shorts between elements, open filament, improperly positioned elements and elements disconnected from the pins on the tube base.

Kinescope testing devices can be

purchased to be used for checking emission and for the presence of inter-element shorts. Some of the testing devices are accessories to the tube testers; others are self-contained units. It is possible with some of these instruments to test the kinescope while it remains installed in the cabinet. Generally, they test for shorts and leakage by applying a voltage across the tube elements. A current flow then indicates that a short is present. For instance, no current should flow between grid and cathode when a positive voltage is applied to the cathode. If a current is measured under these conditions, a grid-to-cathode short is indicated. In some of these testers emission is tested by measuring the current flow from cathode to first anode with B plus applied to the first anode and the grid and cathode grounded. No second anode voltage is applied. A certain current reading in microamperes then indicates proper emission for specific tube types. A lower reading indicates low emission.

The test instruments provide a positive check for internal shorts, opens and emission. However, faulty kinescopes can also be recognized in other ways. We have already discussed means of troubleshooting the grid-cathode circuit. Low emission may show up as insufficient contrast in the picture. Another symptom of low emission is sometimes referred to as a "silvery" picture. It is shown in the photograph of Fig. 38-42.

Improperly positioned elements can make it difficult to obtain brightness or render proper centering impossible. When a kinescope will not "light up" although all the correct operating potentials are present, moving the ion trap far back on the plastic base of the tube sometimes results in the appearance of part of the raster at the edge of the tube face. This indicates that the elements are improperly positioned.

Opened filaments and other disconnected elements are frequently caused by an unsoldered connection in the pin on the tube base. If the filaments do not light in a new kinescope it is worthwhile to heat the filament pins and allow some solder to flow into them.

Another symptom of a faulty kinescope is shown in the photograph of Fig. 38-43.

Originally, the tube photographed had no brightness. The dark, smeared picture appeared when the ion trap was repositioned. This symptom is frequently encountered with glass kinescopes. If the neck of the tube is tapped, bright, white, horizontal streaks appear. Continuous tapping may also cause the tube to work properly again but this is only temporary.

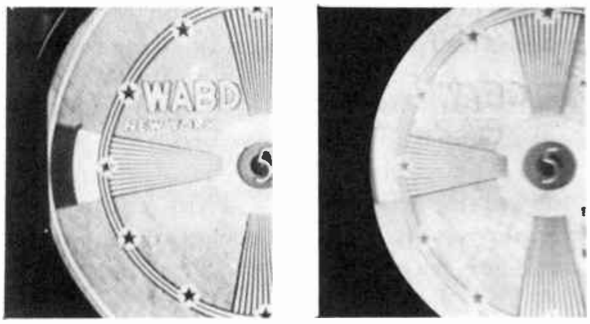

Normal Picture

Silvery Picture

Fig. 38-42

Smeared Dark Picture Due to Defective Kinescope

Fig. 38-43

NOTES

NOTES

NOTES

NOTES

TELEVISION SERVICING COURSE

PREPARED BY

RCA INSTITUTES, INC.

A SERVICE OF *RADIO CORPORATION OF AMERICA*

HOME STUDY DEPARTMENT
350 West 4th St., New York 14, N. Y.

LESSON THIRTY NINE

PART I – THE FM SOUND CIRCUITS

PART II – TROUBLESHOOTING THE FM SOUND CIRCUITS

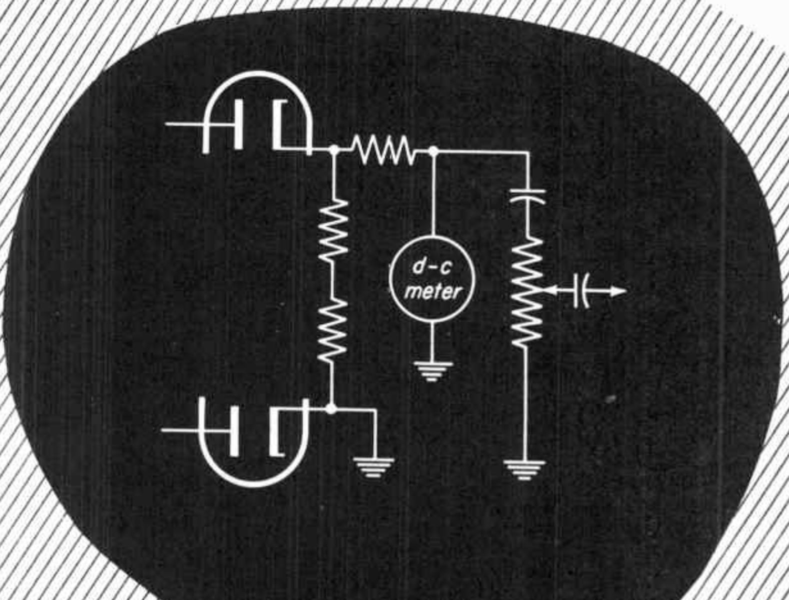

Lesson 39

PART I – THE FM SOUND CIRCUITS

TYPES OF SOUND I-F CIRCUITS

39-1. Two types of sound sections are in use: the split-sound system and the intercarrier system.

Split-Sound System. – Figure 39-1 is a block diagram showing a split-sound FM sound section. The sound and picture signals enter the RF amplifier, heterodyne with the local oscillator signal, and appear at the mixer output as two intermediate-frequency signals separated by 4.5 mcs.

The sound signal is separated from the picture signal by a tuned circuit. The point at which it is separated, called the *sound take-off point,* may be located at the output of the mixer or at the output of one of the picture i-f amplifiers, usually the second. These take-off points are shown by the dotted lines in the diagram.

The chief advantage of separating the sound and picture signals in the i-f amplifier is that, since the sound signal is amplified with the picture signal, fewer sound i-f amplifiers are needed.

The amount of amplification necessary before the sound signal can be applied to the FM detector depends upon how much it has been amplified in previous stages. The amplified i-f signal enters the FM sound detector section, in which it is converted to an audio-frequency signal. Two types of FM detectors are commonly used: the phase-shift discriminator, and the ratio detector, both of which were dedeveloped by S. W. Seeley.

To obtain the full advantage of frequency modulation, the FM detector should not respond to variations in amplitude. The ratio detector automatically discriminates against amplitude modulation. Phase-shift discriminators, however, are sensitive to changes in amplitude as well as frequency. To remedy this, the last stage of i-f amplification in receivers so equipped is designed to reject amplitude modulation.

The audio-frequency signal passes through several stages of audio-frequency amplification, which amplify it sufficiently to drive a loudspeaker.

Intercarrier Sound System. – The intercarrier system differs from the split-sound system in several respects. In the intercarrier system, the sound signal is not separated from the video signal at the

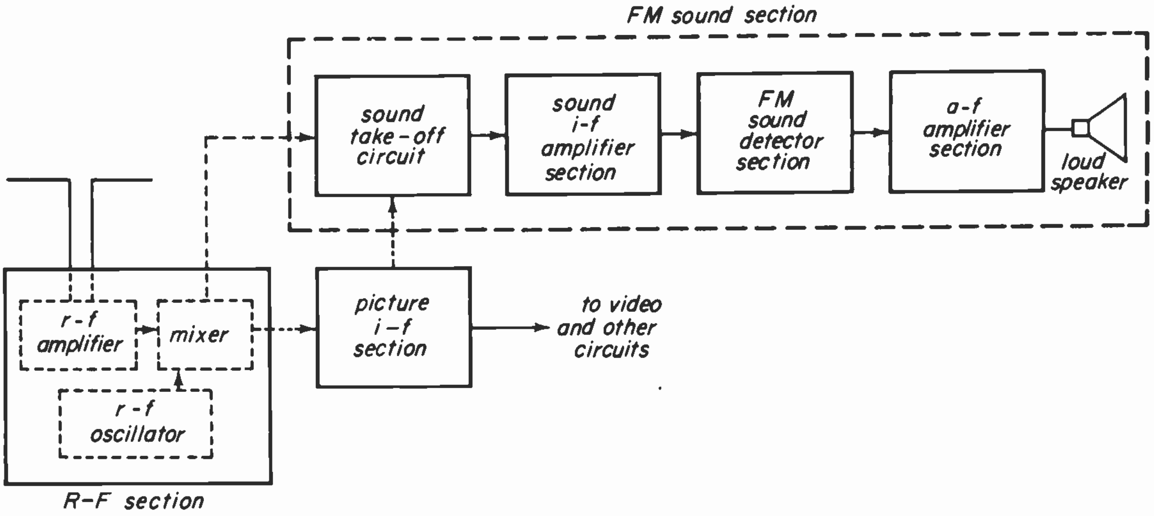

Fig. 39-1

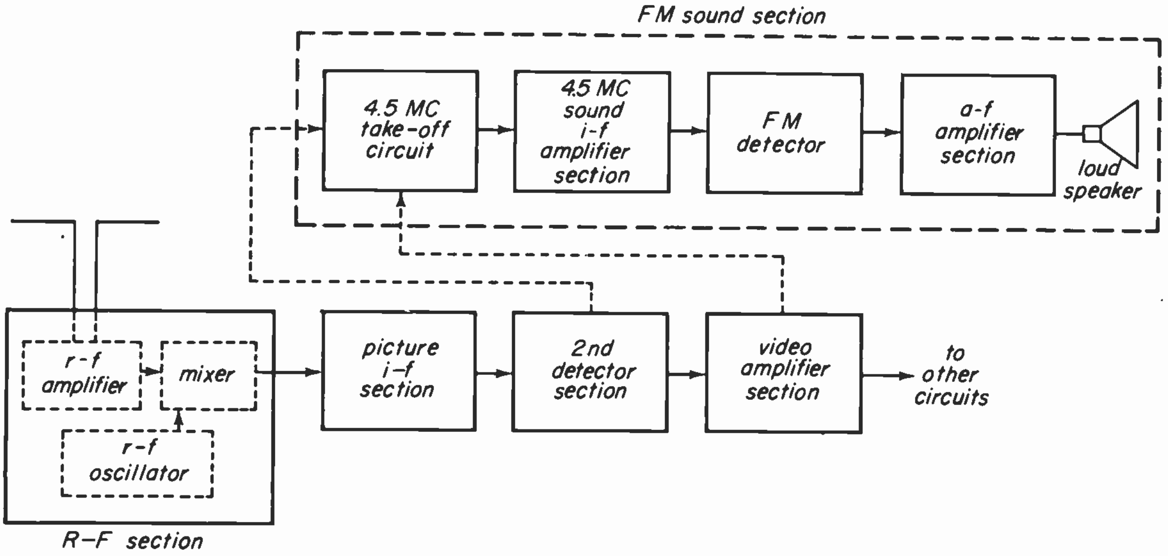

Fig. 39-2

mixer output, but is amplified with it in the picture i-f amplifier stages. This is shown in Fig. 39-2.

Both signals are then fed to a *second detector section,* which functions as a combined video detector and second mixer. The video signals may range from 30 cycles to 4 mcs, while the sound carrier is converted to 4.5 mcs. This 4.5 mc sound i-f is fixed by the transmitted carrier frequencies, and is an important characteristic of the intercarrier sound system.

The production of a second sound i-f signal is due to a heterodyning action in the second detector. The amplified sound and picture signals combine to produce a beat note. Since the difference in frequency between the two carrier frequencies is always 4.5 mc, the beat note is also 4.5 mc. A 4.5-mc tuned circuit couples the second sound signal into a 4.5-mc sound i-f amplifier. The take-off point may be at the output of the video detector or amplifier stages. The amplified 4.5-mc sound signal is then applied to the FM detector.

COMPARISON OF FM AND AM

39-2. Picture or sound information can be transmitted by modulating the *amplitude* or the *frequency* of a carrier wave. In amplitude modulation, or AM, the amplitude of the carrier wave is varied in accordance with the amplitude variations of the modulating wave or signal.

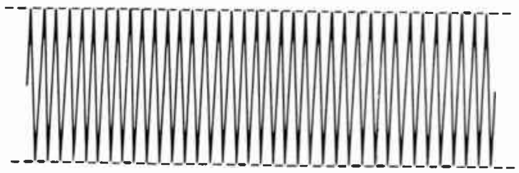

(a) unmodulated carrier wave

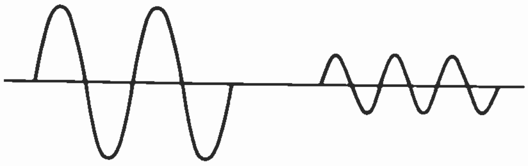

(b) low a-f signal

(c) higher a-f signal of lower amplitude

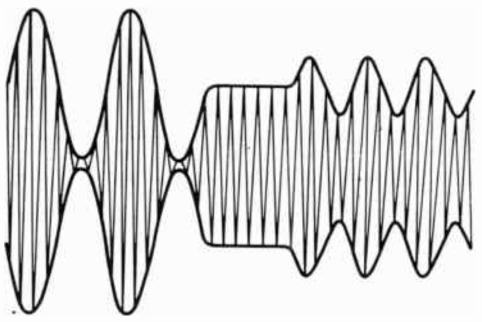

(d) resulting amplitude-modulated carrier wave

Fig. 39-3

Referring to Fig. 39-3*a*, note the constant amplitude (indicated by the dashed line) and the constant frequency of the unmodulated carrier wave. Suppose we modulate the carrier wave, first by a low audio-frequency signal *(b)*, and then by a higher a-f signal of lower amplitude *(c)*. Note the new characteristics of the carrier wave in *(d)*. The variations in amplitude of the carrier wave (shown by the dashed line) correspond exactly to those of the modulating signal. During the period when no modulation is applied, there is no amplitude variation in the carrier wave. When the modulating signal of higher frequency and lower amplitude (*c*) is applied, the carrier wave varies in accordance with that signal.

There is, however, a limit to the amplitude of modulating signal that can be impressed upon the carrier wave. Exceeding this limit results in over-modulation, and severe distortion. This is shown in Fig. 39-4.

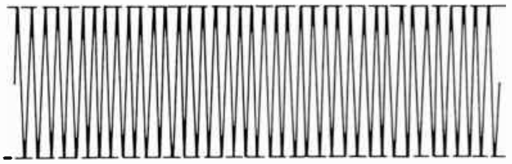

(a) unmodulated carrier wave

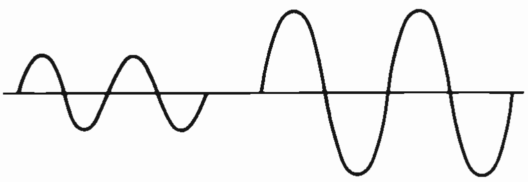

(b) a-f modulating signal which will produce 100% modulation *(c) a-f modulating signal which will produce over-modulation*

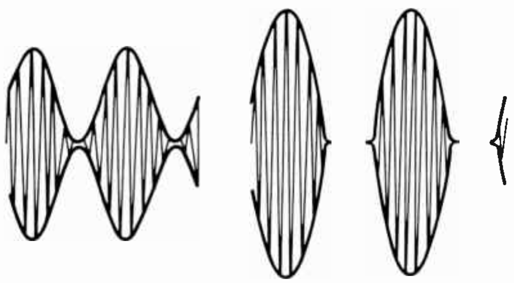

(d) 100% modulated carrier wave *(e) over-modulated carrier wave*

Fig. 39-4

The carrier wave (*a*) in Fig. 39-4 is first modulated by the modulating signal of *(b)*. The resulting wave is that of *(d)*. It is then modulated by a modulating signal of greater amplitude *(c)*. The result is shown in *(e)*; the carrier wave is interrupted, and severe distortion results. It follows, therefore, that a maximum amplitude of modulating signal exists. This maximum modulation is called 100 percent modulation.

In frequency modulation, information is impressed on a carrier wave by varying its *frequency*, the amplitude remaining constant.

With no modulation applied to the carrier wave, its frequency is constant, and is called the *center* or *resting frequency*. Now, suppose that one complete cycle of an a-f modulating signal is applied to a carrier wave. When the a-f signal is at zero volts (a-c axis) the carrier frequency remains unchanged. However, when the a-f signal becomes increasingly positive, the carrier-wave frequency increases. As the a-f signal reaches its peak positive amplitude, the carrier wave reaches its highest frequency above center or resting frequency — its *maximum deviation.* As the a-f signal becomes decreasingly positive, the carrier wave follows with a decrease in frequency. When one-half of the a-f cycle is completed, the a-f voltage is instantaneously zero, and the carrier wave is at its resting frequency. As the a-f signal starts through its negative half-cycle, the carrier wave decreases in frequency. When the a-f signal reaches its maximum negative amplitude, the carrier wave reaches its lowest frequency below center frequency — again, its maximum deviation. This deviation above and below center frequency is called the *carrier wave swing*. The amount of deviation is directly proportional to the amplitude of the modulating signal. Note that there can be no over-modulation, since an extremely strong modulating signal can only cause greater deviation.

Figure 39-5*a* represents a carrier wave at center or resting frequency.

Figure 39-5*e* shows the effect of modulation by the signals of *(b)*, *(c)*, and *(d)*.

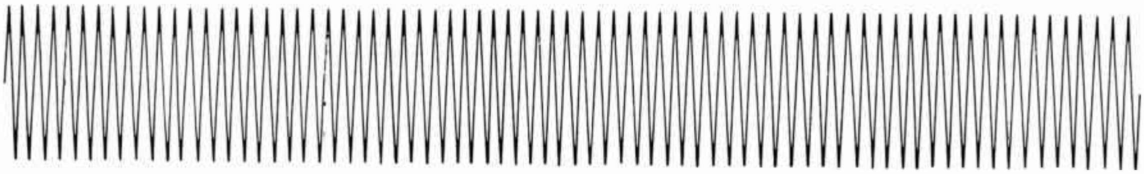

(a) carrier wave of resting or center frequency

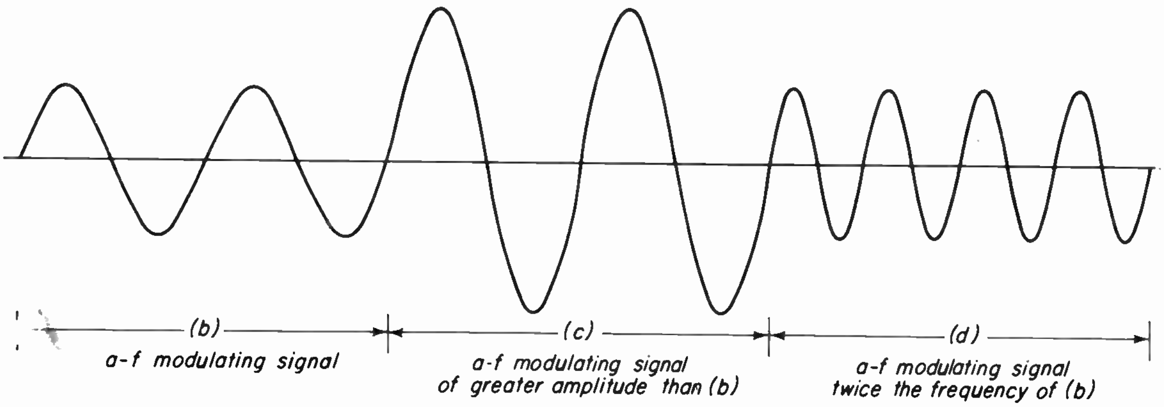

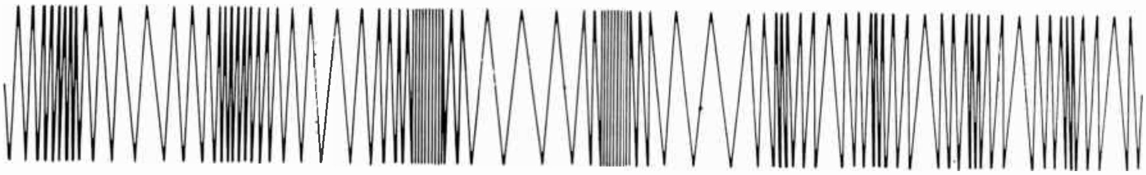

(e) carrier wave, frequency modulated by (b), (c) and (d)

Fig. 39-5

Note the increase of frequency of the carrier wave as the modulating signals become positive, and the decrease of frequency as the modulating signals go negative. Since the amplitude of the modulating signal of *(c)* is greater than that of *(b)*, there is greater deviation in the carrier wave. Since the frequency of the modulating signal of *(d)* is twice that of *(b)* or *(c)*, the carrier wave deviates twice as rapidly. Note that the carrier wave, whether modulated or unmodulated, remains constant in amplitude.

REDUCTION OF INTERFERENCE

39-3. The advantage of frequency modulation is its comparative freedom from noise interference, whether within the receiver or from external sources.

Receiver Noise. – The noise pulses produced internally in any receiver may be divided into two general classes: those caused by *thermal agitation* and those caused by *shot effect.* Thermal agitation is the random motion of free electrons caused by thermal action in all electrical conductors. This motion generates a low-amplitude voltage over a wide range of frequencies. Shot effect is due to the slight variations of plate current and the irregular flow of electrons from cathode to plate which occur in all vacuum-tube circuits. Flowing through the plate-load impedance, these current variations develop a voltage which appears as noise.

Receiver noise is present in both AM and FM receivers. However, since most interference is in the form of amplitude variations, and the FM carrier wave corresponds to the modulating signal by variations in *frequency*, interference is held to a minimum in FM receivers.

External Noise. – Interference from external sources is often more undesirable than receiver noise. Ignition, electrical appliance, and atmospheric noise pulses may at times completely prevent AM reception. FM receivers, however, often attenuate these interfering signals much more completely because they reject amplitude modulation.

Station Interference. – Interference may occur from stations operating on the same channel or on adjacent channels. In the AM system, a station with an amplitude only slightly greater than that of another on the same channel can cause serious interference. In the FM system, a much greater amplitude is required to produce objectionable interference. Thus FM receivers are usually less subject to such interference.

Noise, Pre-Emphasis and De-Emphasis. – In spite of the reduction in interference afforded by FM systems, some noise pulses appear, especially in the upper audio-frequency range. Since noise in this part of the spectrum is particularly annoying, a means of attenuating it is provided. FM systems achieve this by increasing the amplitude of higher audio frequencies in the modulating stages of the transmitter. This is called pre-emphasis. A de-emphasis circuit in the receiver reverses the process, and as the signal is reduced to its original amplitude, the accompanying high audio-frequency noise pulses are also reduced.

PRODUCTION OF FM

39-4. An FM carrier wave can be produced by frequency-modulating a sine-wave oscillator. The oscillator generates a steady sine-wave voltage, the frequency of which is determined by the combination of inductance and capacitance of the tank circuit. The frequency of oscillation is determined by the formula, $f = 1/2\pi\sqrt{LC}$, where f = frequency in cycles per second, L = inductance in henries, and C = capacitance in farads.

Thus, if either the inductance or the capacitance decreases, the frequency of oscillation increases. Conversely, an increase of inductance or capacitance causes a decrease in oscillator frequency.

Elementary FM Oscillator. – To frequency modulate an oscillator, its inductance or capacitance must be varied in accordance with the intelligence to be transmitted. For example, suppose we modify an oscillator by the addition of a capacitor microphone across the tank circuit, as shown in Fig. 39-6.

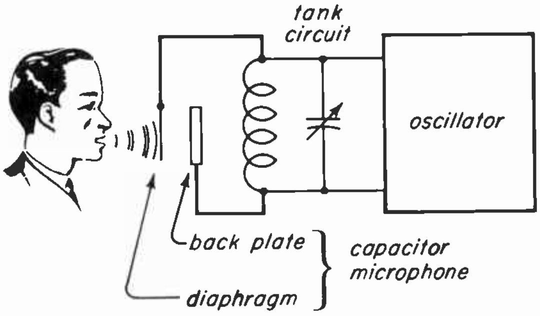

Fig. 39-6

The capacitor microphone consists of an immovable, metallic back plate, and a flexible, metallic diaphragm, separated by an air dielectric. The resonant frequency of oscillation is determined by the inductance of the tank circuit and the sum of the two capacitances in parallel (that of the tank circuit and that of the microphone).

When sound waves strike the capacitor microphone, the diaphragm vibrates toward and away from the fixed plate. This movement of the diaphragm causes the total capacitance to increase and decrease, which in turn causes the frequency of oscillation to increase and decrease. For example, a sound wave of 1,000 cycles per second will cause the FM carrier wave to swing 1,000 times per second. A sound wave of the same frequency, but of greater amplitude, will also cause the carrier wave to swing 1,000 times per second, but the amount of deviation will be proportionally greater. That is, the frequency of the carrier wave deviates at the same rate as that of the modulating signal, and is proportional to the amplitude of the modulating signal.

REACTANCE TUBE CIRCUITS

39-5. A reactance-tube circuit is a

vacuum-tube circuit which can be designed to display either inductive or capacitive reactance. This reactance can be varied by a change in control grid voltage.

The reactance-tube modulator consists of a reactance tube placed across the oscillator tank circuit. The frequency of the oscillator can be varied in accordance with a modulating signal by varying the reactance of the modulator.

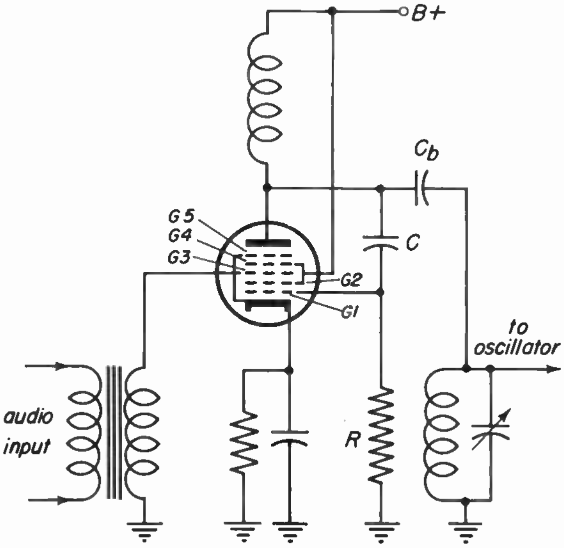

Fig. 39-7

Figure 39-7 is a schematic of a reactance-tube modulator, placed across a sine-wave oscillator. A pentagrid type tube is used. Referring to the diagram, G1 is a quadrature or out-of-phase grid which operates in conjunction with the resistor-capacitor branch. G3 is the control grid. G2 and G4, connected internally, form the screen grid, shielding the control grid from the quadrature grid. G5 is the suppressor.

Resistor R and capacitor C, comprising the R-C branch, are connected in series. The reactance of C is computed at the frequency of the oscillator, and is at least ten times as great as the resistance. Because of this large proportion of reactance to resistance, the R-C branch appears capacitive to the a-c voltage of the oscillator.

Examination of the figure shows that the sine-wave voltage of the tank circuit is placed across the R-C branch and across plate and ground of the reactance tube. C_b, which has only negligible reactance, serves as a d-c blocking capacitor.

The phase relationship of voltage and current are shown in Fig. 39-8.

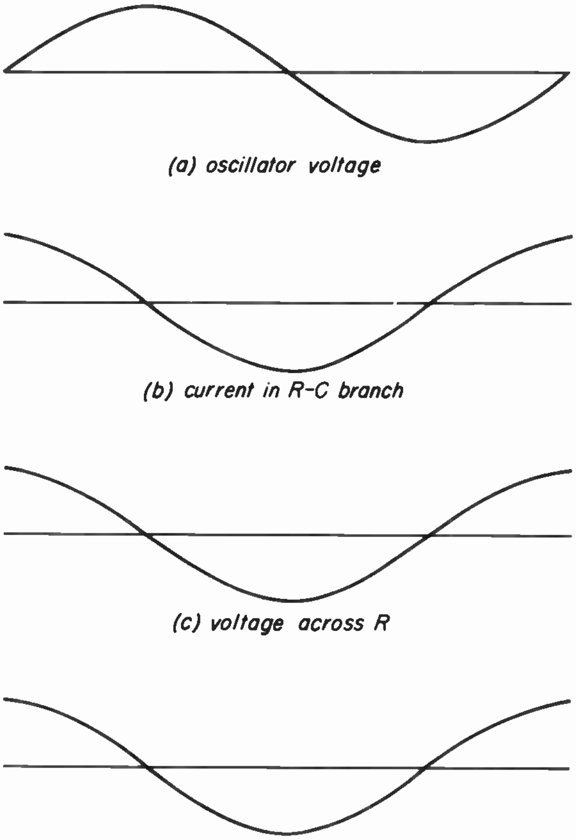

(a) oscillator voltage

(b) current in R-C branch

(c) voltage across R

(d) plate current

Fig. 39-8

The oscillator a-c sine-wave voltage *(a)* is used as a reference voltage. It is placed across the R-C branch, and results in an alternating current *(b)* which leads the reference voltage by 90 degrees. The voltage across R *(c)* is in phase with the current, and therefore leads the reference voltage by 90 degrees. Since this voltage is the quadrature grid voltage, and is applied to G1 and ground, the plate current *(d)* is in phase with it. Therefore, the plate current leads by 90 degrees the reference voltage. Note that (1) the reference voltage is placed across plate and ground of the reactance tube, and (2) the plate current through the tube leads the reference voltage by 90 degrees. This shows that the tube exhibits a capacitive reactance.

Variation of Reactance and Oscillator Frequency. – The reactance of the tube is equal to the a-c reference voltage divided by the a-c plate current. A change in either of these will therefore change the reactance. The oscillator voltage, used as a reference, remains constant; therefore the a-c plate current is varied. The control-grid voltage determines how much of the a-c plate current created by the quadrature grid finally reaches the plate. A negative-going control voltage will decrease the a-c plate current and increase the reactance. This causes the apparent capacitance to decrease (since capacitive reactance is inversely proportional to capacitance) or the apparent inductance to increase (since inductive reactance is directly proportional to inductance), depending upon the type of reactance tube used. This in turn causes the frequency of the oscillator to increase or decrease. A positive-going control grid voltage has the opposite effect. The change of reactance (and therefore frequency) due to a change in control-grid voltage should be linear. To effect this, the control voltage should be biased at the middle of the i_p-e_{G3} curve and the change in control voltage limited to the linear portion of the curve. Cathode biasing is used to set the operating point in the middle of the linear portion of the curve.

An a-f voltage placed across control grid and ground will then produce an FM wave. The rate of frequency change will be that of the a-f voltage, and the deviation will be proportional to the amplitude of the a-f voltage.

Inductive Reactance Tube. – We have seen that a reactance tube may display capacitive reactance. It is also possible for a reactance tube to display *inductive* reactance. Such a circuit is shown in Fig. 39-9.

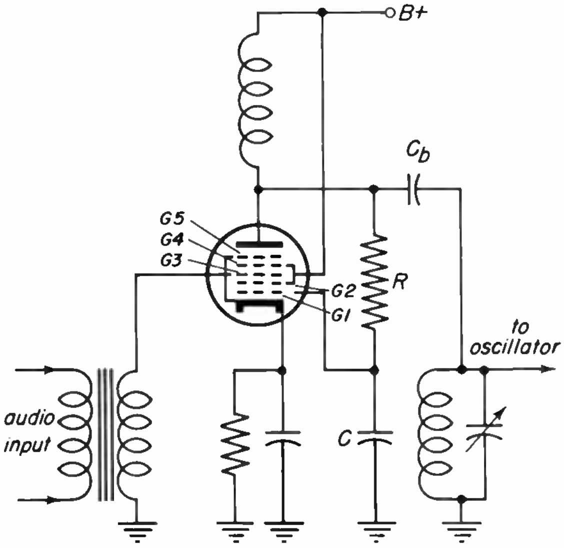

Fig. 39-9

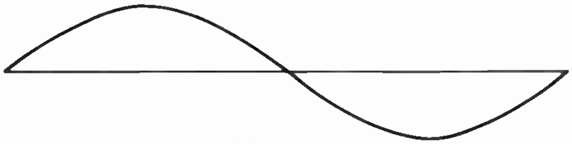

(a) oscillator voltage

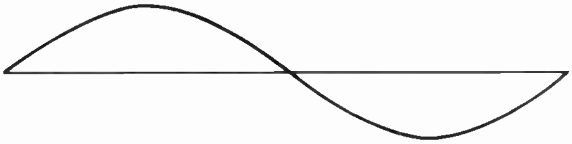

(b) current in R-C branch

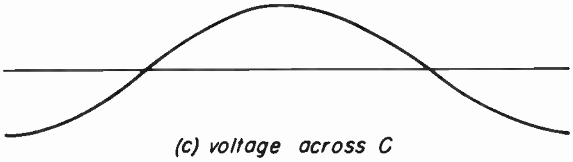

(c) voltage across C

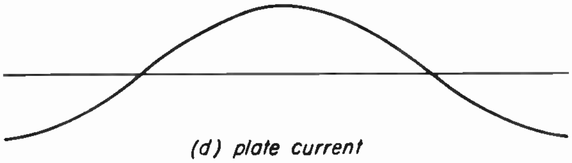

(d) plate current

Fig. 39-10

Comparing this circuit with the capacitive-reactance tube circuit of Fig. 39-7, note that there is only one difference: R and C are interchanged. The ratio of resistance to reactance in the R-C branch (calculated at oscillator frequency) is ten to one or greater. Therefore the R-C branch appears resistive to an a-c voltage. Follow the relationship of each voltage and current in Fig. 39-10, as we discuss the inductive-reactance tube circuit.

The oscillator voltage (Fig. 39-10*a*) is applied to the reactance tube (plate and ground) and the R-C branch. The current (*b*) flowing in the R-C branch is resistive and in phase. The voltage across C (*c*) lags by 90 degrees the current through C. This voltage is applied to the quadrature grid. The plate current (*d*) is therefore in phase with the quadrature grid voltage. Since the a-c plate current lags the a-c plate voltage, the tube possesses inductive reactance.

Thus, a reactance tube can be designed to display either inductive or capacitive reactance. And since the reactance can be varied in accordance with information to be transmitted, the reactance tube can be used as an FM modulator.

PRINCIPLES OF FM DETECTION

39-6. The FM carrier wave is modulated by varying its frequency in accordance with the amplitude of the modulating signal, at a rate corresponding to that of the modulating signal. The FM detector must reverse this process, and furnish an output voltage which follows the variations of the original modulating signal in amplitude and rate of change.

The simplest method of doing this is by *slope detection.* A sound i-f amplifier is aligned to operate on the slope of its response curve, producing an output which varies in amplitude in accordance with the changing frequency of the incoming signal. This amplitude-modulated wave is then passed through an AM detector, which filters out the carrier wave.

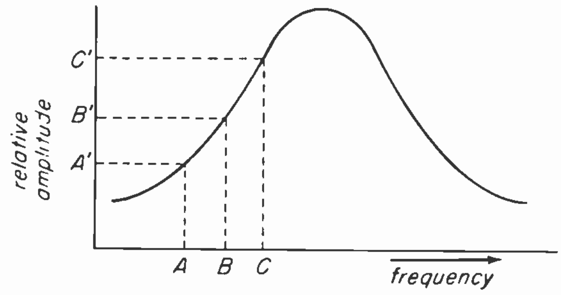

Fig. 39-11

Figure 39-11 shows the over-all response curve of a typical sound i-f amplifier. It is so aligned that the center frequency of the sound i-f signal is on the center of one slope – in this case, the low-frequency slope. When the signal is at center frequency B, the corresponding output voltage is represented by B'. If the signal frequency decreases to A, the output voltage decreases to A'. If the frequency of the signal increases to C, the output voltage increases to C'.

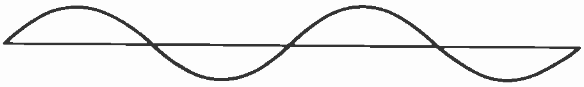

(a) a-f modulating signal

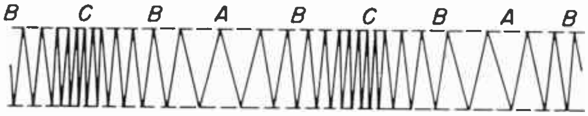

(b) F-M carrier wave modulated by (a)

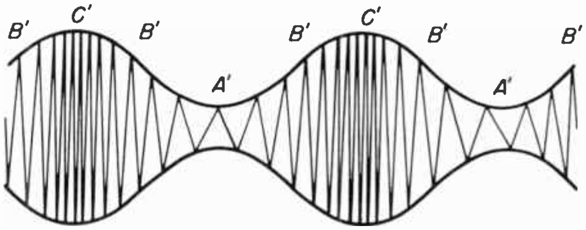

(c) amplitude variations same as (a) due to slope detection

Fig. 39-12

Figure 39-12*a* represents an a-f modulating signal. Impressed on an FM carrier wave, it produces the modulated wave of *(b)*. The letters A, B, and C represent frequencies below, at, and above center frequency. This modulated wave is passed through a sound i-f amplifier aligned to operate on its slope, as explained above. The output of the amplifier is the wave of *(c)*. Note that frequency variations (A,B,C) have become amplitude variations (A', B', C'). This amplitude-modulated wave is passed through an AM detector, the output of which is the original modulating signal.

Slope detection has two disadvantages.

It offers no provision for rejection of undesired amplitude modulation, and, since the slope is not linear, a strong modulating signal may produce distortion. For these reasons, slope detectors are no longer used in TV sound systems. It is important to note, however, that slope detection can cause the FM sound signal to be detected in the AM picture i-f section of a receiver, producing audio signal in the video amplifier and the resultant sound bars in the picture.

MINIMIZING AMPLITUDE MODULATION

39-7. — An FM carrier is constant in amplitude when transmitted. However, by the time it reaches the detector of the receiver, its amplitude may no longer be constant. If a detector which responds to amplitude modulation is used, the output will contain not only the signal but any noise pulses or other interfering signals accompanying it. To suppress such AM interference, the last i-f amplifier stage may be operated as a limiter.

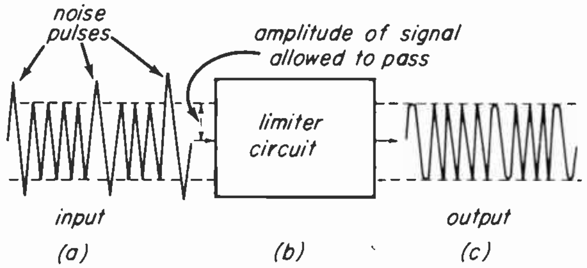

Fig. 39-13

How a limiter effectively removes amplitude modulation from an FM carrier wave can be seen in Fig. 39-13. The amplitude of the FM carrier wave *(a)* has been varied by noise pulses, as shown. However, the limiter circuit *(b)* rejects amplitudes beyond the limits shown by the dashed lines. The remainder of the signal is amplified, and the output voltage is of constant amplitude, as shown in *(c)*.

The characteristics of a limiter circuit are: the use of a sharp cut-off pentode tube, grid-leak or signal bias, and low screen-grid and plate voltages. The amplitude of the input signal voltage must be great enough to cause plate saturation, and also greater than the grid cut-off voltage of the tube.

Figure 39-14 is the schematic of a limiter circuit; it is the last i-f amplifier stage preceding the discriminator. T111 is a tuned interstage transformer which has the necessary bandwidth to pass an FM i-f signal (more than 50 kc). The bandwidth is determined by the Q of the primary and secondary, and the mutual coupling between them. The tuned primary is connected in the plate circuit of the preceding i-f amplifier, and offers maximum impedance to the i-f current. Consequently, the i-f plate current develops a maximum voltage across the primary, and by transformer action a voltage is induced in the tuned secondary. The i-f signal which appears across the secondary is the grid signal voltage for the 6AU6. Grid-leak bias is used, the bias voltage appearing across R186 and C222.

The bias is self-adjusting for signals of different amplitudes, permitting the positive tip of the signal voltage to drive the grid slightly positive. When the signal voltage first appears at the input circuit of the tube, the bias voltage across R186-C222 is zero volts, and the grid is driven positive to the maximum value of the signal voltage. The grid current which is drawn charges C222. The voltage developed across C222, the bias voltage, is always approximately equal to the maximum value of the incoming positive signal voltage. Within a few cycles of operation, equilibrium is established, and the positive tip of the signal voltage draws enough grid current to keep the bias voltage equal to the existing maximum signal voltage. If the signal voltage increases, a greater grid current flow charges C222 to a higher voltage, increasing the bias. In any case, only the most positive tip of signal voltage can drive the grid positive. This self-adjustment depends upon the time constant of R186-C222, which is usually from one to five microseconds. The time constant for the circuit of Fig. 39-14 is 2.2 microseconds.

The stage is operated Class C, since plate current flows for less than 180

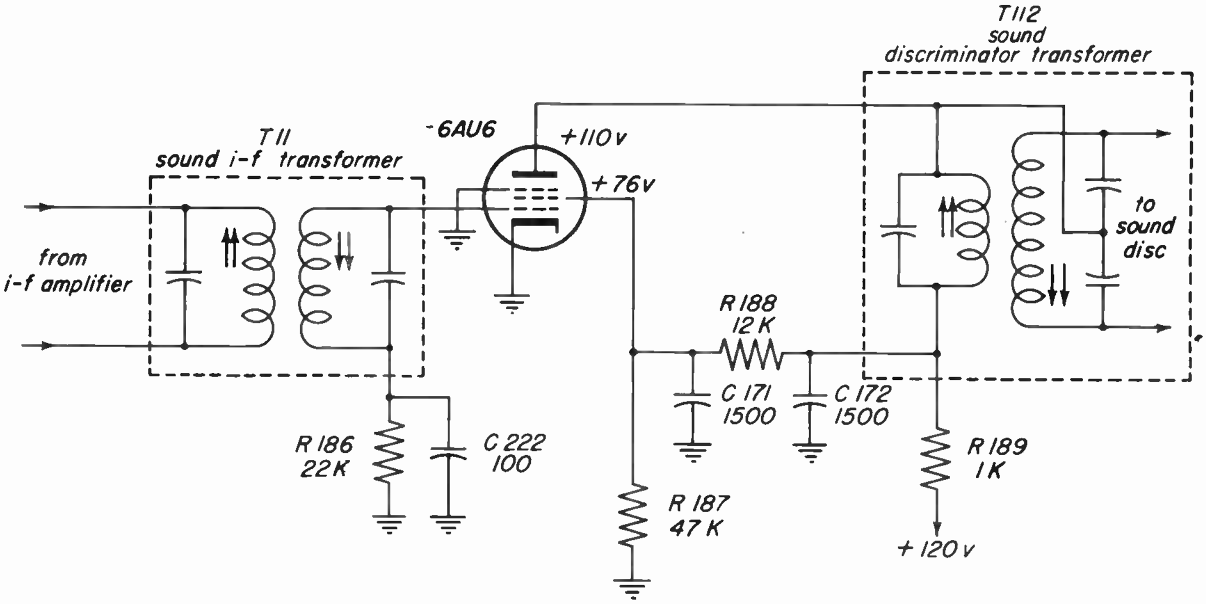

Fig. 39-14

degrees of the signal voltage a-c cycle—during the shaded portion of the grid-signal curve of Fig. 39-15. As long as the amplitude of the signal voltage is greater than the cut-off voltage of the tube, the pulses of plate current are constant. Reference to Fig. 39-15 shows that it is the area of the grid signal voltage *before* cutoff which determines the amount of plate current flow. If the signal voltage increases, plate-current saturation results. If the signal voltage decreases, the bias voltage readjusts itself so that only the positive tip of signal voltage will draw plate current. Note in the figure that all amplitudes of signal voltage have approximately the same area of plate-current conduction. This holds true only

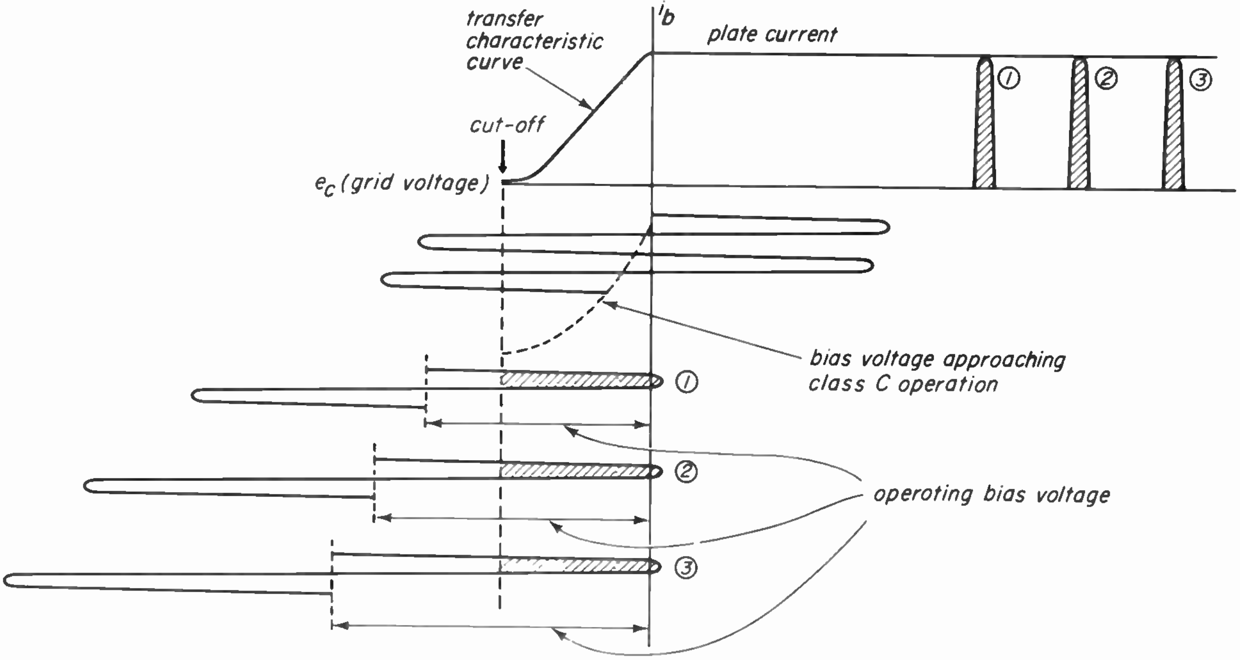

Fig. 39-15

so long as the circuit operates Class C. If the signal voltage becomes so weak that the tube no longer operates Class C, proper limiting is not obtained.

The constant pulses flow through the tuned primary of T112 (the sound discriminator transformer), and a constant-amplitude sine-wave voltage is developed, due to the electrical fly-wheel effect of the tank circuit. The instantaneous frequency of the output voltage is the same as that of the grid signal voltage.

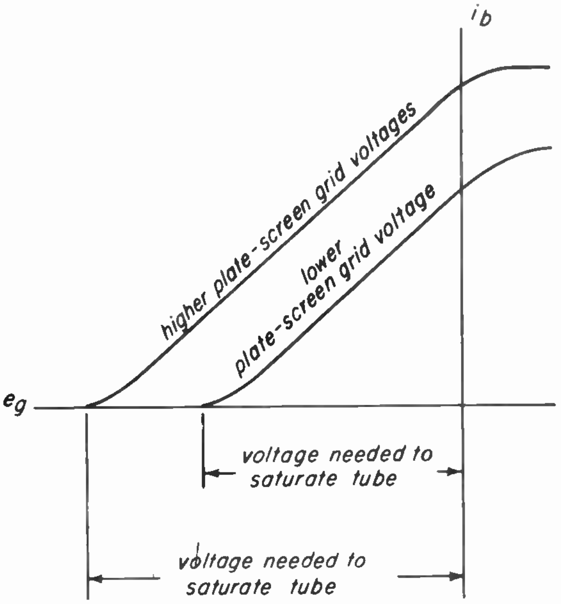

Fig. 39-16

The higher the screen-grid and plate voltages, the greater amplitude of signal voltage is required to cause saturation and develop a bias voltage greater than cutoff. Referring to Fig. 39-16, which shows two transfer characteristic (i_b-e_c) curves, it is apparent that lower screen-grid and plate voltages require less grid signal voltage for saturation and Class C operation. Consequently, the values of plate and screen-grid voltage are determined by how much the signal has been amplified.

To maintain a constant screen-grid voltage, a voltage-divider network (R187-R188 in Fig. 39-14) is used. If a series screen-grid dropping resistor were used, the the screen-grid voltage would tend to vary with signal voltages of different amplitudes, causing the gain of the stage to vary. C171 is a screen-grid bypass capacitor. R189-C172 is a decoupling network which maintains constant screen-grid and plate voltages and prevents i-f signals from affecting other circuits through the common impedance of the power supply.

Cathode bias may be used in addition to grid-leak bias, to protect the tube against excessive plate current which might occur with no incoming signal voltage.

Since the grid-leak bias is produced by the rectified signal, the presence of bias, as shown by measurement with a d-c voltmeter, indicates the presence of an a-c signal.

PHASE-SHIFT DISCRIMINATOR

39-8. – The function of the discriminator is to develop: (1) a positive output voltage proportional to increase in frequency of the carrier wave, (2) a negative output voltage proportional to decrease in frequency of the carrier wave, and (3) zero voltage at center frequency of the carrier wave. Before determining how an a-f voltage is produced by the discriminator, let us review the properties of a tuned transformer.

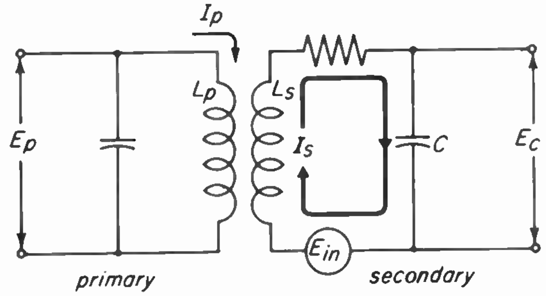

Fig. 39-17

Transformer Theory. – Figure 39-17 represents a typical tuned transformer. A source of voltage, E_p, is applied to the tuned primary. This is the reference voltage. Its frequency is the resonant frequency of the transformer. The primary current, I_p, lags the reference voltage by 90 degrees. This current induces a voltage in each turn of the secondary, and the sum of these voltages is indicated by the voltage E_{in}. However, this is not the output voltage of the secondary. Rather, it should be considered as a generator forming part of a series-resonant circuit composed of the coil L_s, its small internal resistance R_s, C, and E_{in}. At resonance the secondary current L_s, is in phase with E_{in}. The voltage across C (E_c) lags I_s by 90 degrees. E_c is the output voltage of the secondary circuit. Thus at resonant frequency E_c leads E_p by 90 degrees. This is shown in Fig. 39-18a.

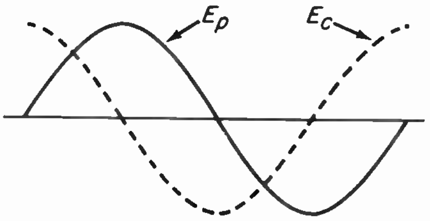

(a) at resonant frequency of transformer

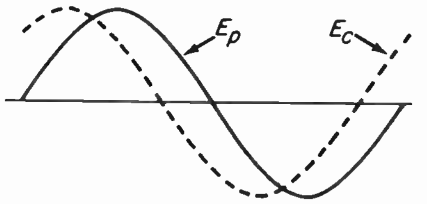

(b) above resonant frequency of transformer

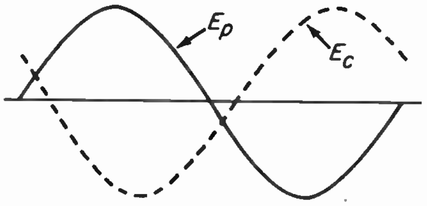

(c) below resonant frequency of transformer

Fig. 39-18

Now, let the frequency of E_p be increased. The voltage induced in the secondary still lags the current in the primary by 90 degrees, but since the secondary circuit is inductive for voltages above resonant frequency, I_s lags E_{in} by an amount proportional to the increase in frequency. Therefore, E_c leads E_p by *less* than 90 degrees. This is shown in Fig. 39-18*b*.

If the frequency of E_p is lower than the resonant frequency of the transformer, the reverse occurs; the secondary becomes capacitive, I_s *leads* E_{in}, and E_c leads E_p by *more* than 90 degrees. This is shown in Fig. 39-18*c*.

In short, a voltage of varying frequency on the primary of a tuned transformer produces an output with a phase displacement proportional to the variations of the input frequency. If the input voltage is an FM carrier wave, with its center frequency that of the resonant frequency of the transformer, the output voltage corresponds in phase angle to the variations in frequency of the carrier wave.

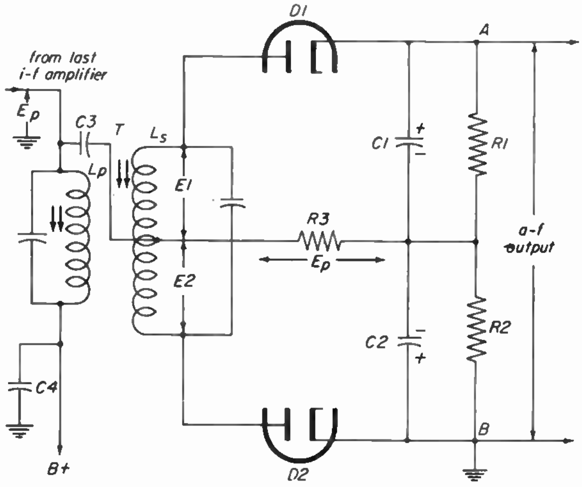

Fig. 39-19

Phase-Shift Discriminator. – Figure 39-19 is the schematic of a phase-shift discriminator. T, the sound discriminator transformer, is the same as the tuned transformer discussed above save for the center-tapped secondary coil. The output of the last i-f amplifier, which is operated as a limiter, is developed across the primary of T. The lower end of the primary is at ground potential for i-f voltages, because of the low reactance of C4 at intermediate frequencies. Resistor R3 may be considered to be across the primary, since the reactances of C3, C2, and C4 are negligible to i-f. Hence, E_p is also developed across R3. In some discriminators this resistor is replaced by an inductor.

The discriminator is composed of two

half-wave rectifier circuits, each having two sources of voltage. In the upper section, the voltage of the upper half of the coil, E1, is in series with E_p across R3, and both voltages are in series with the diode and the load-filter R1-C1. In the lower section, the voltage of the lower-half of the coil, E2, is in series with E_p across R3, the diode, and R2-C2.

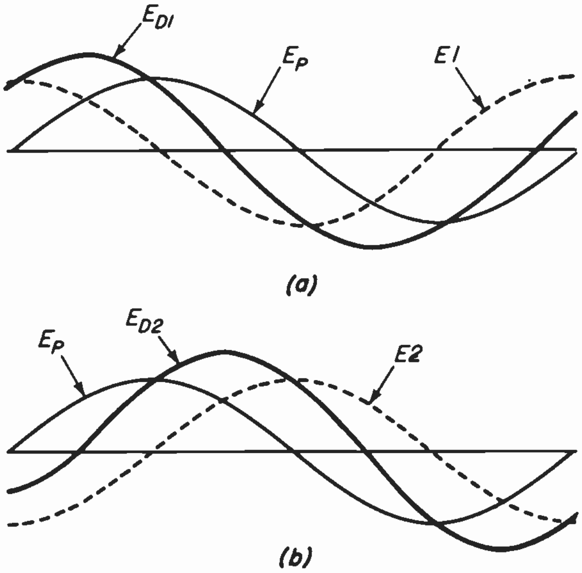

Fig. 39-20

Operation at Center Frequency. – The voltage (E1) induced in the upper half of of the secondary of T is 180 degrees out of phase with the voltage induced in the lower half (E2). Figure 39-20*a* shows E_p and E1 vectorially added to produce E_{D1}; Fig. 39-20*b* shows E_p and E2 added to produce E_{D2}. Note the 180-degree phase reversal of E1 and E2. Assuming, for the moment, that E1, E2, and E_p are of equal amplitude, E_{D1} and E_{D2} must always be equal in magnitude, although E_p is not equal to either.

When two phase-displaced sine-wave voltages of equal amplitude and the same instantaneous frequency are added vectorially, the result is a sine-wave voltage of the same frequency but with a phase midway between the original voltages. The sum of two sine-wave voltages of equal instantaneous frequency but 180 degrees apart in phase is zero. Conversely, two sine-wave voltages of the same instantaneous frequency, in phase with each other, produce a voltage twice that of one alone. Two sine-wave voltages of the same instantaneous frequency phased 90 degrees apart produce a voltage 1.41 the strength of one alone, with a phase midway between the two. As the sine-wave voltages become increasingly in phase, the resultant voltage increases, and as they progress increasingly out of phase, the resultant voltage decreases.

In Fig. 39-20*a*, E_p and E1 are sine-wave voltages of equal amplitude and frequency, phase-displaced by 90 degrees. The sum voltage is E_{D1}, which has an amplitude of 1.41 of either E_p or E1. E_{D1} is rectified by D1 (Fig. 39-19) and a d-c voltage appears across R1-C1, with the polarity shown.

E_{D2} of Fig. 39-20*b* is the sum of E_p and E2, which are of equal amplitude and frequency, phase-displaced by 90 degrees. E_{D2} is equal to E_{D1}. D2 rectifies E_{D2} (Fig. 39-19), and the d-c voltage of the indicated polarity appears across R2-C2. C1 and C2 filter the ripple voltage at i-f. Since the discriminator is a balanced circuit, and E_{D1} equals E_{D2} at the center frequency, the voltage drops across R1-C1 and R2-C2 are equal and opposite. The voltage across A and B – the output of the discriminator – is zero at center frequency.

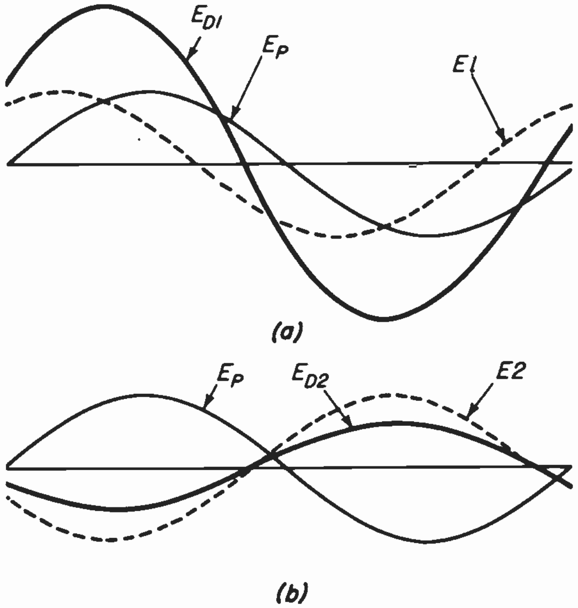

Fig. 39-21

Operation Above Center Frequency. – Above center frequency the phase difference between E_p and E_c is less than 90 degrees. Figure 39-21*a* shows the phase relationship between E1 and E_p of the upper section of the discriminator, and *(b)* the relationship between E2 and E_p of the lower section. E1 and E2 are of equal amplitude, but 180 degrees out of phase. Note that E1 and E_p of *(a)* are out of phase by less than 90 degrees. Therefore, the vector sum E_{D1} is greater than at center frequency, and the voltage drop across R1-C1 is correspondingly greater. Also note that E2 and E_p *(b)* are out of phase by more than 90 degrees, the vector sum E_{D2} is less than at center frequency and the voltage across R2-C2 is also less. Since the voltage drop across R1-C1 increases, and the voltage drop across R2-C2 decreases, the output is positive above center frequency.

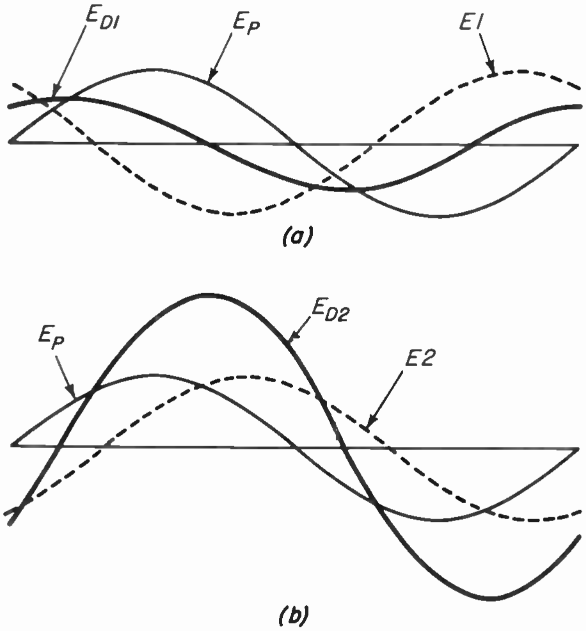

Fig. 39-22

Operation Below Center Frequency. – When the frequency of the FM carrier wave, or E_p, decreases, the voltage drop across R1-C1 decreases and the voltage drop across R2-C2 increases. The output voltage is therefore negative at frequencies below center frequency. Phase relationships are shown in Fig. 39-22*a*. E_{D1} is less than at center frequency, and the voltage drop across R1-C1 is correspondingly less. The reverse is true in *(b)*. The result is a negative output voltage.

Discriminator Response. – Operation of the discriminator has been discussed in terms of three separate frequencies; above, below, and at center frequency. Actually though, for each instantaneous change of frequency of the FM carrier wave, there is a corresponding change in output voltage. Thus, for a carrier wave deviating at an a-f rate, an a-f voltage appears across the output of the discriminator.

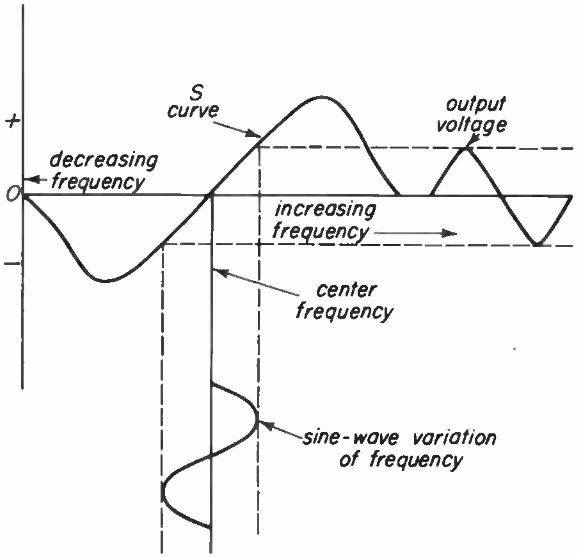

Fig. 39-23

Figure 39-23 shows a typical discriminator or "S" curve. The curve illustrates the following characteristics of discriminators:

(1) At center frequency the output is zero.

(2) For a frequency increasing from center frequency, the output is increasingly positive *up to a limiting point.*

(3) For a frequency decreasing from center frequency, the output is increasingly negative *up to a limiting point.*

Beyond a maximum point of deviation in either direction, distortion or spurious responses are obtained. After a certain limit, the discriminator response tapers off to zero, since the tuned transformer cannot respond to voltages considerably removed from the resonant frequency of the transformer.

Discriminator Response to Amplitude Modulation. – An undesirable feature of the discriminator is its response to amplitude modulation at frequencies other than the center frequency. Referring to Fig. 39-21*a* and *b*, if E_p increases, E1 and E2 will increase correspondingly. Therefore, E_{D1} and E_{D2}, after rectification by D1 and D2, will develop proportionally greater voltage drops across R1-C1 and R2-C2. The same condition occurs below center frequency. Amplitude modulation of the carrier wave must therefore be removed before the carrier reaches the discriminator. This is accomplished by a limiter.

De-Emphasis Circuit. – As explained earlier, the higher a-f signal voltages are pre-emphasized at the transmitter, to aid in suppressing interference. A de-emphasis circuit is therefore necessary, to reduce these signal voltages to their original strength. A simple low-pass RC filter is used, placed as shown in Fig. 39-24*a*.

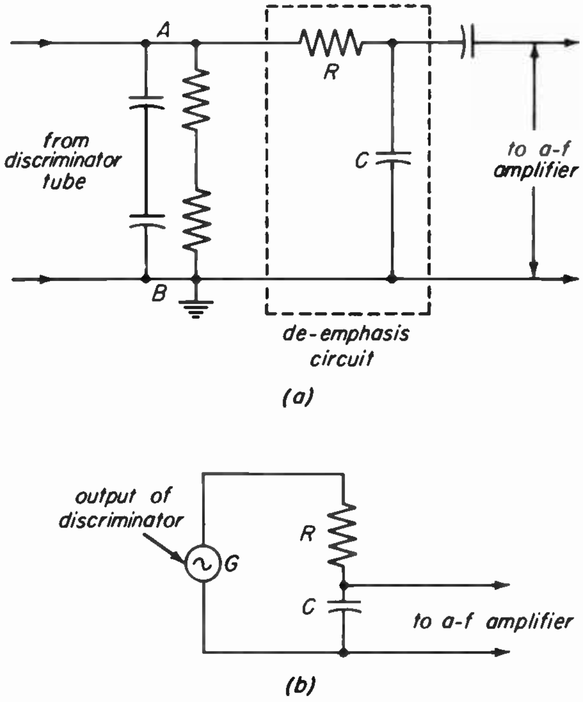

(a)

(b)

Fig. 39-24

The input of the filter is connected to the output of the discriminator (points A and B). The output of the filter is taken off capacitor C and applied to the input of the a-f amplifier, usually at the ungrounded end of the volume control. Referring to Fig. 39-24*b*, assume that a-c generator G produces a constant voltage of varying frequency. The generator, capacitor C, and resistor R form a series circuit. As the frequency of the generated voltage increases, the reactance of C decreases, resulting in less voltage drop across C. The time constant for this de-emphasis filter is about 75 microseconds. Practical values for the resistor and capacitor are 38,000 ohms and .002 mf.

THE RATIO DETECTOR

39-9. – The phase-shift discriminator provides efficient FM detection. However, it is responsive to amplitude variations. Another type of FM detector, the ratio *detector*, has the ability to reject noise pulses and other amplitude variations in the FM carrier wave.

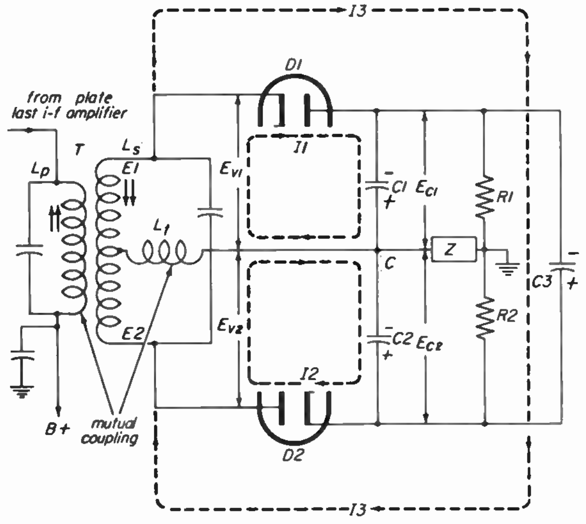

Fig. 39-25

Ratio Detector Circuit. – The basic circuit of a ratio detector is shown in Fig. 39-25. The transformer, T, has a tertiary winding, L_t, closely coupled to the primary. This causes the primary voltage to be developed across L_t as well as across the secondary. Note that the two diodes are so connected that they are effectively in *series*. Capacitor C3 (about 8 mf) and resistors R1 and R2 form a filter circuit with a comparatively large time constant, which is important in rejecting noise pulses, amplitude modulation, and other AM interference. The a-f output voltage is taken off between point C and ground (the center tap of R1 and R2). Z can be considered as the ratio-detector load.

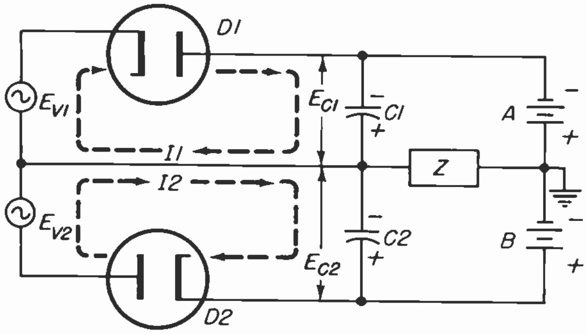

Fig. 39-26

Principles of Operation. – Figure 39-26 is an equivalent circuit of the ratio detector. E_{v1} represents the vector sum of the primary voltage, E_p, across L_t and E1, the upper-half secondary voltage. E_{v2} represents the vector sum of E_p and E2, the lower-half secondary voltage. E_{v1} and E_{v2} are rectified by D1 and D2 and charge C1 and C2. Batteries A and B are the equivalent of capacitor C3 and resistors R1 and R2. The two resistors, being equal in value, divide the voltage of C3 equally. The voltage across R1 and R2 may be considered as momentarily constant, and therefore is represented by batteries A and B.

The output of the ratio detector depends upon the ratio of the voltages applied to the diodes. For example, at center frequency E_{v1} and E_{v2} are at a ratio of 5 volts to 5 volts, or 1 to 1. With this unity ratio, the output of the ratio detector is zero. At instantaneous deviations above center frequency, E_{v1} is greater than E_{v2}, and this ratio produces a *positive* voltage output at the ratio detector. At instantaneous deviations below center frequency, E_{v1} is less than E_{v2}, and a negative voltage is produced at the output of the ratio detector. Thus, an FM carrier wave deviating at an a-f rate will cause the ratio of E_{v1} to E_{v2} to vary at that a-f rate, resulting in an a-f voltage across the output.

Operation. – Referring to Fig. 39-25, the ratio of E_{v1} to E_{v2} must always equal the ratio of E_{c1} to E_{c2}. This is true because capacitor C1 charges from E_{v1} (through current I_1), and capacitor C2 charges from E_{v2} (through current I_2). Therefore, the charges in capacitors C1 and C2 are always proportional to voltages E_{v1} and E_{v2}. Also, the *sum* of E_{c1} and E_{c2} always equals the voltage across capacitor C3. This is true because C1 and C2 are in series, and in parallel with capacitor C3. The voltage across the terminals of any parallel circuit is the same anywhere in the circuit. Also, the voltage developed across capacitor C3 is derived, to a considerable extent, from the voltages E1 and E2 (through current I_3).

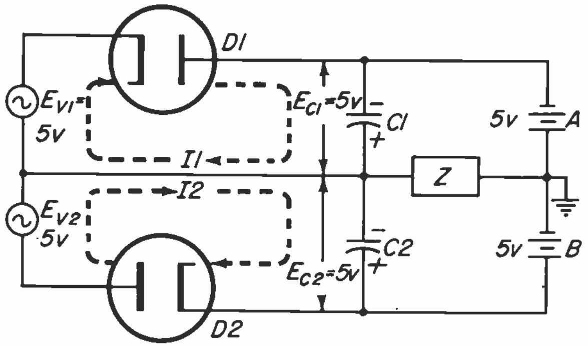

(a)

Fig. 39-27

Operation at Center Frequency. – Referring to Fig. 39-27*a*, the total input voltage, E_{v1} plus E_{v2}, has a peak value of 10 volts, E_{v1} and E_{v2} being equal. Assuming no losses, capacitor C1 will charge (due to current I_1) to the peak value of E_{v1} or 5 volts, and capacitor C2 will charge (due to current I_2) to the peak value of E_{v2}, or 5 volts. Capacitor C3 of Fig. 39-25 will charge (mainly through I_3) to the peak value of the two voltages, or 10 volts. The voltage drops across resistors R1 and R2 are each 5 volts, hence the two 5-volt batteries in the equivalent diagram. An output voltage is only developed when a current flows through Z, the input impedance of the amplifier. Due to the 5 volts across capacitor C1, and the 5 volts across battery A, both of the same polarity, no current flows through Z. The same is true of C2 and battery B; therefore, the output voltage is zero.

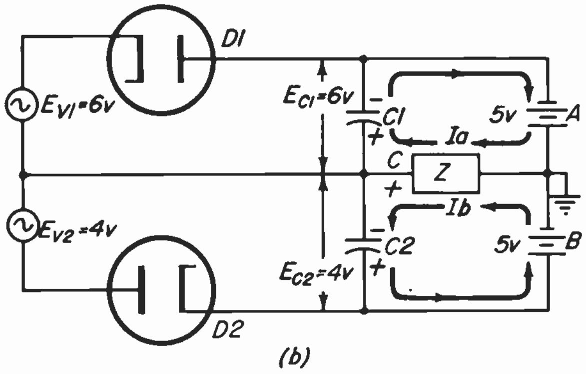

Fig. 39-27

Operation Above Center Frequency. – Figure 39-27*b* represents the circuit with an instantaneous deviation of the carrier wave above center frequency. Assume that E_{v1} is 6 volts peak, and E_{v2} is 4 volts peak, charging capacitors C1 and C2 to 6 and 4 volts respectively. Due to the large time constant of capacitor C3 and resistors R1 and R2 (Fig. 39-25), batteries A and B of the equivalent circuit remain at 5 volts each. Since battery A is at 5 volts and capacitor C1 is charged to 6 volts, current I_a will flow through Z, making point C positive with respect to ground. Also, since battery B has a higher voltage than capacitor C2 (4 volts), current I_b will flow through R3, again making C positive with respect to ground. Since the output voltage is proportional to the ratio of voltages E_{c1} and E_{c2}, and the ratio of the two voltages is proportional to the frequency deviation of the carrier, the output voltage is proportional to deviation of the carrier.

Operation Below Center Frequency. – Figure 39-27*c* represents the circuit with an instantaneous deviation below center frequency. Assume that E_{v1} and E_{v2} are 4 and 6 volts peak, respectively. If no losses are assumed, the large time constant of capacitor C3 and resistors R1 and R2 results in 5 volts across each battery. Since battery A has a higher voltage (5 volts) than capacitor C1 (4 volts), current I_a will flow through Z, causing point C to be negative with respect to ground. And, since E2 (6 volts) is higher than battery B (5 volts), current I_b will flow, also making point C negative with respect to ground. Therefore, the output voltage is negative below center frequency.

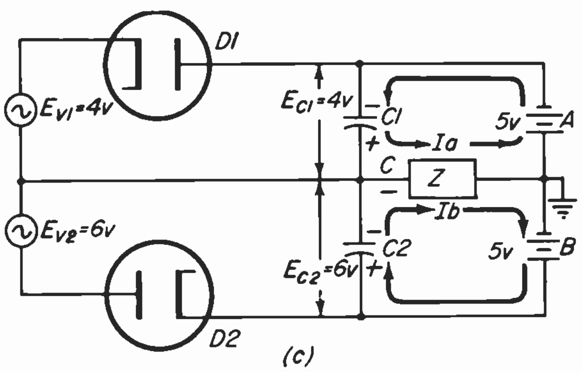

Fig. 39-27

Thus a deviating FM carrier wave causes a changing ratio of E_{v1} to E_{v2}, which creates an a-c output with a frequency equal to the rate of deviation of the carrier, and an amplitude proportional to the deviation of the carrier.

Amplitude Rejection in the Ratio Detector. – The output across C3 depends upon the voltages in C1 and C2, and the sum of these voltages can never be greater that that across C3. If noise pulses of greater amplitude than that of the signal are received, they tend to charge C3 to a greater value. However, since the noise pulses are of short duration, and the capacitance of C3 is relatively large, the increase in voltage across C3 is negligible. If the voltage across C3 remains constant, the sum of the voltages of capacitors C1 and C2 cannot increase, since they are in parallel with C3. If the voltages in capacitors C1 and C2 cannot change, the output voltage cannot change. In this way sudden amplitude variations in the carrier are effectively "absorbed" by capacitor C3. The time constant of C3 and resistors R1 and R2 is fairly large, about 0.1 or 0.2 second. This time constant, which is greater than the duration of most noise pulses, is not readily affected by impulse noises or any rapid changes in the carrier-wave amplitude. If the carrier operating level changes, the voltage across the R1-R2-C3 branch readjusts to another operating value.

Audio De-Emphasis. – Impedance Z across C and ground of Fig. 39-25 consists of the input impedance of the a-f amplifier and the de-emphasis network. The de-emphasis network operates as explained before.

FM SOUND SYSTEMS

39-10. The FM sound section can be subdivided into the following sections:

(1) Sound take-off
(2) FM sound i-f amplifier section
(3) FM detector
(4) Audio section

Split Sound System. – The FM sound section circuit of a typical split-sound system receiver is reproduced in Fig. 39-28. The sound take-off circuit can be located in the output of the mixer, or the output of the first or second picture i-f amplifier. In this case, it is in the output of the mixer. The primary to T2 is peaked to 21.8 mc, and is part of the stagger-tuned picture i-f section. The secondary, tuned to 21.25 mc, serves two purposes. It extracts the FM i-f signal and channels it into the FM sound section, and also prevents the i-f signal from continuing into the picture i-f amplifier section. The sound take-off circuit is also called a sound trap. To reduce loading in the primary circuit, the full input impedance of the first sound i-f tube is not placed across the entire secondary, but only a portion of it.

The first sound i-f amplifier is a conventional i-f amplifier. Transformer coupling is used for both the input and output. As in most high-frequency transformers, T2 and T111 are slug tuned. Cathode or self-biasing is used; bypass condenser C189 maintains a constant bias voltage across R212. R213-C191 is a decoupling network, and isolates the stage from the common impedance of the power supply.

That part of the FM i-f signal voltage which appears across B and D of the secondary of T2 is amplified by the 6BA6, a high-gain pentode operating Class A. The output voltage appears across the primary of T111. The tuned-transformer coupling between the i-f amplifiers can have loose coupling, providing a peaked response. The bandwidth is usually in excess of 100 kc, sometimes as high as 250 kc, although the actual bandwidth requirement is about 50 kc. Using a bandwidth greater than necessary aids in correcting local oscillator drift.

The second i-f amplifier is similar to the first. Cathode bias is developed by R215-C194. In addition, signal bias is developed across R214-C192.

R234 is a screen-grid dropping resistor which lowers the +135 volts to +118 volts. Bypass condenser C196 prevents degeneration. R216-C185 is a decoupling network for the plate supply of the second i-f amplifier.

The primary signal voltage of T112 appears across the secondary, due to transformer action, and becomes the signal input voltage for the third i-f amplifier.

Signal bias voltage is developed across R217-C197. The grid time constant is small and thus the bias voltage is able to follow rapid changes in the carrier level. The R175-R218 voltage divider is used to maintain a constant screen voltage. If a screen-grid dropping resistor were used, and screen-grid current fluctuations were present, the G_m of the tube and the gain of the stage would change. The voltage divider and bypass capacitor C200 filter any a-c component which might appear across the junction of R175, R218 and ground. The 6AU6 is a sharp cut-off pentode.

The next stage is the phase-shift discriminator. The circuit is similar to that of a basic discriminator in Fig. 39-19.

T113 is the sound discriminator transformer. The 6AL5 is a high-perveance twin diode. The two load resistors are R219 and R220. Instead of placing a capacitor across each load resistor, which would effectively place the capacitors in series, capacitor C203 is used. R230 drops the heater voltage from 6.3 volts to a slightly lower value. R3 (or L3 in Fig. 39-19), across which primary voltage is developed is not present in this discriminator. In this case, the primary voltage is developed across R219 and R220 in parallel, since the reactances of C200, C202 and C203 are low. Thus these resistors not only serve as load resistors but also have the primary voltage of T113 developed across them. The a-f voltage developed by discriminator action on the FM i-f signal appears across C203. This a-f voltage is applied to a two-stage a-f amplifier. The sound volume control is tone-compensated by R221-C204. Ordinarily, as volume is decreased the human ear responds to the higher a-f signals more than the lower signals. To compensate for this response of the ear, R221-C204 bypass the higher a-f when the contact arm is moved to a lower signal level. Signal bias is used for the 6AT6, fixed bias for the 6K6. The 6AT6 and 6K6 are R-C coupled by R224 and C208. C207 and C209 bypass and de-emphasize the higher a-f signals. R226, R227 and C224 form a decoupling network and filter. T114 provides impedance matching between the 6K6 and the speaker. A hum-bucking coil reduces any 120-cycle ripple present. In some TV receivers, the sound take-off circuit is located in the output circuit of the first or second pix i-f amplifier. Since the FM i-f signal is amplified by the pix i-f amplifier, only two stages of sound i-f amplification aregenerally used in this case.

Intercarrier Sound System. – The sound section of an intercarrier sound TV receiver is basically the same as that of a split-sound TV receiver. Fig. 39-29 is the sound section of a typical intercarrier-sound receiver. It is tuned to 4.5 mcs, which is the second sound i-f in intercarrier receivers.

T110 is the 4.5-mc sound take-off circuit. It is a series-resonant circuit, appearing in the output of the second detector. The sound take-off circuit has two functions. It helps prevent the 4.5-mc sound signal from continuing into the video amplifier, by offering a negligible impedance at 4.5 mcs, and hence a negligible voltage drop across the trap. It also channels the 4.5-mc sound signal to the 4.5 mc sound i-f amplifier. At 4.5 mc a relatively high voltage drop appears across C148 and L of T110. To reduce the loading of L, thus maintaining a sharp response curve, the input circuit of the first sound i-f amplifier is placed across only a part of the coil. If the response curve of the take-off circuit were too broad, the high video frequencies would be bypassed:

Both cathode and signal bias are used in the first and second sound i-f amplifiers. Cathode-bias voltage for V101 and V102 is developed across R101-C101 and R105-C106. Signal bias voltage is developed across R263-C198 and R104-C105. R102 is the screen dropping resistor and C102A is the screen bypass capacitor for V101. R103-C102B is the plate decoupling network for V101. T101 is a tuned transformer, coupling V101 to V102.

The following stage is the ratio detector, which converts the i-f signal into an a-f signal. The ratio detector is similar to the basic ratio detector discussed earlier in the lesson. A notable difference are the two series resistors, R110 and R111. These resistors equalize the charging and discharging time of C200. for both diodes.

C226 balances the unequal capacitance distribution in the ratio detector. R112-C113 is the de-emphasis network. The output voltage of the ratio detector is developed across C113. S 101-2 REAR is used to switch the phono input or the a-f signal into the two-stage a-f amplifier. When either signal is applied to the a-f amplifier section, a choice of three tones is offered: minimum high, normal, and minimum low a-f signal. When phono is used, the raster does not appear because

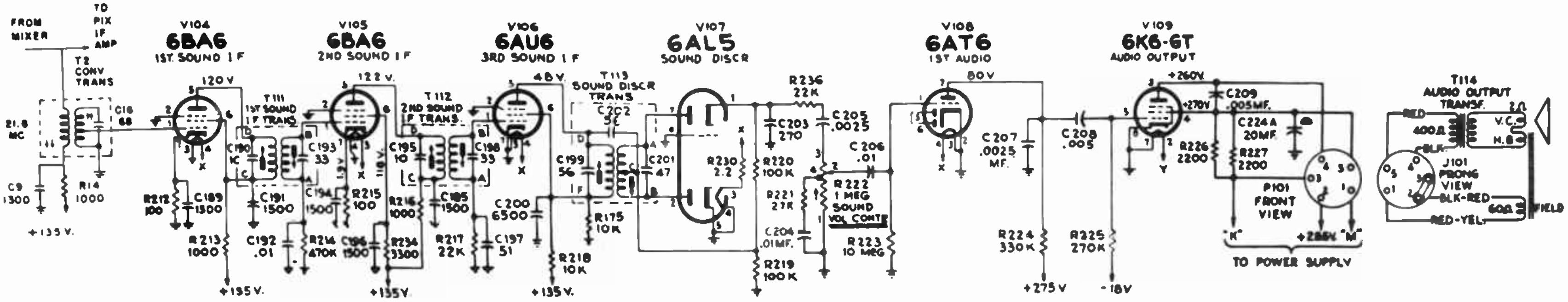

Fig. 39-28

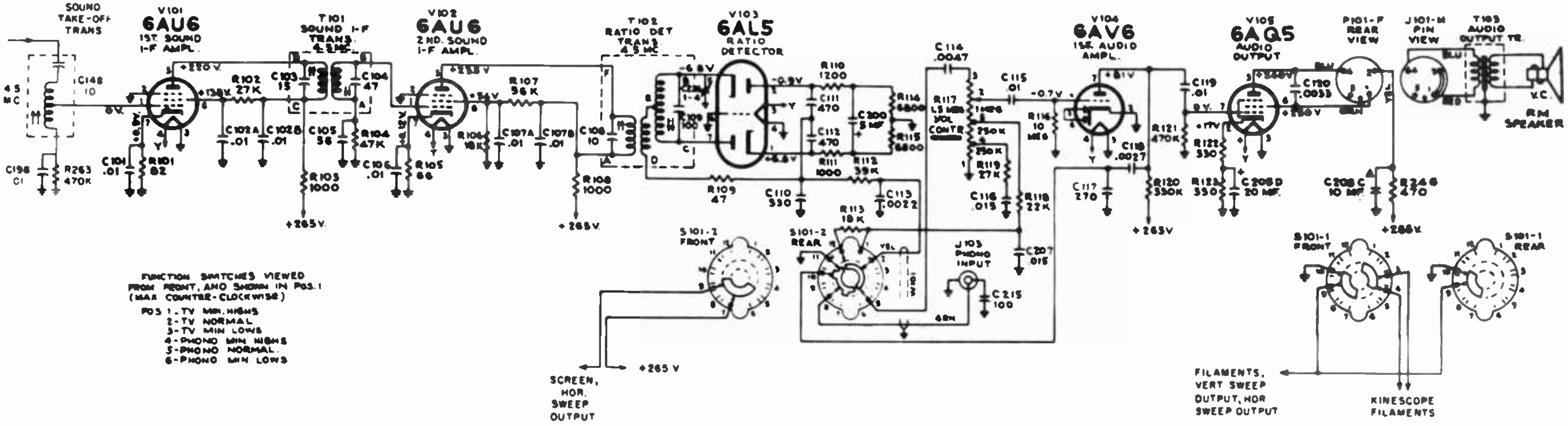

Fig. 39-29

the second anode voltage is removed. S 101-2 FRONT removes the screen-grid voltage from the horizontal sweep output tube; therefore no high voltage is present when the ganged switch is in phono position. Also, when the ganged switch is in phono position, S 101-1 FRONT and S 101-1 REAR disconnect the heater voltages for the horizontal sweep output tube, and the kinescope.

R117 is the volume control. It is tone-compensated with the volume turned low. Signal bias for the first a-f amplifier is developed by R116-C115. R120-C119 serve as R-C coupling between the a-f stages. Cathode bias for V105 is developed by R122 and R123. C205D is connected only across R123. Some degeneration exists, due to the unbypassed R122, causing a decrease in the gain of the stage, but reducing distortion.

R246-C205C is a plate-decoupling filter for the power amplifier. T103 matches the power amplifier to the speaker voice coil.

Advantages of Intercarrier Systems. – The intercarrier sound TV receiver offers several advantages over the split-sound system. There is less need to re-adjust the fine tuning from channel to channel, oscillator drift is not so apparent, and microphonics in the local oscillator tube have less effect on the sound.

PART II - TROUBLESHOOTING THE FM SOUND CIRCUITS

SOUND TROUBLES AND TESTS

39-11. In troubleshooting the FM sound channel, we follow the basic procedure developed in previous lessons:

1. Localizing to a section
2. Localizing to a stage
3. Finding the defective component

We are assuming in this lesson that the raster and picture are both normal but the sound is not. In general, one of three things may be wrong with the sound: (a) no sound, (b) weak sound, or (c) distorted sound. The FM sound channel consists of two sections, as defined in Lesson 25. These are the sound i-f section (including the sound detector) and the audio amplifier section (including the loudspeaker). Either of these sections could cause any of the three troubles mentioned above. We will first find how to isolate the trouble of *no sound* to either the sound i-f or the audio-amplifier section. There are several methods of doing this. One method is to measure the output of the sound detector with a d-c voltmeter. Two types of sound detectors are commonly used; the discriminator and the ratio detector. The simplified circuit below shows how to connect the d-c meter to a discriminator.

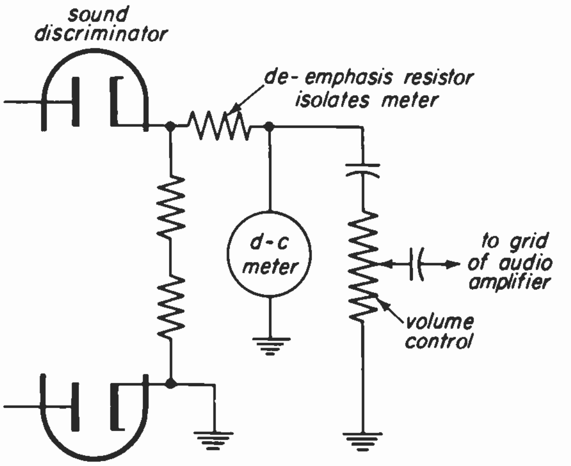

Fig. 39-30

The meter should be connected to the ungrounded cathode of the discriminator tube, immediately following the de-emphasis resistor. This resistor isolates the meter from the circuit, reducing any detuning effect it may have. Once the meter has been connected, vary the fine tuning control and observe the reading. On many sets, if there is a picture without snow and the signal reaches the discriminator, the meter will vary from plus 5 to minus 5 volts, approximately. On other sets the reading may be as high as 15 volts, plus and minus.

Intercarrier sets usually use a ratio detector. The method of connecting a d-c meter to a ratio detector is shown in the simplified diagram in Fig. 39-31.

The meter is connected across the

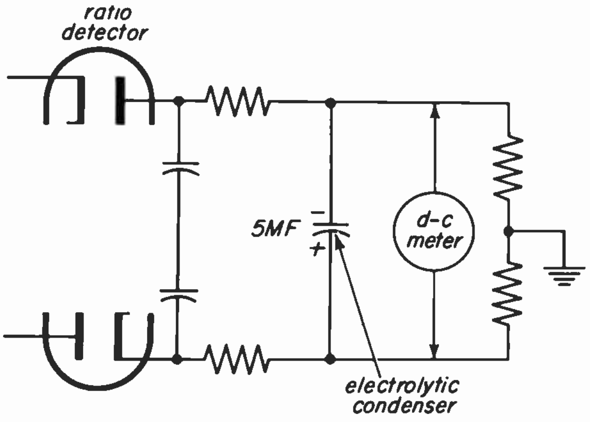

Fig. 39-31

large, electrolytic condenser as shown. (In some sets, the positive end of this condenser may be grounded). The voltage across this condenser always has the polarity shown. The magnitude of this voltage is a direct function of the signal strength and is present only if the signal reaches this stage.

Another way of localizing between the sound i-f section and the audio amplifier section is by means of 60-cycle injection. This is illustrated in Fig. 39-32.

Turn the volume control to maximum and place your finger on the control grid of the first audio-amplifier tube. A loud hum in the speaker indicates that the audio-amplifier section is normal and the trouble lies in the sound i-f section

Weak Sound. – If the sound is weak but the picture and raster are normal, the trouble could be in either sound section, and it is necessary to localize to one section. One way of determining which section is faulty is to measure the sound detector d-c output voltage, as previously described. This presupposes a knowledge of the "normal" reading for the particular set involved. If the d-c voltage is appreciably less than normal, the trouble lies in the sound i-f section. If it is normal, the trouble is in the audio amplifier section.

A quick but satisfactory check for proper operation of the audio amplifier section can be made by connecting a phono pickup to the input of the audio amplifier and observing the loudness and quality of sound. The output of an FM tuner, radio receiver or similar equipment might also be used. In television combination sets having phonograph and radio equipment, this test is easily made by switching in the other equipment. If none of these is available, a rough test may be made using 60-cycle injection as previously described. The loudness of the resultant hum will indicate if the audio-amplifier section is responsible for the weak sound.

Distorted Sound. – Distorted sound may also be caused by either of the two sound sections. However, in the case of the sound i-f section, distorted sound is usually caused only by some defect in the sound detector stage. One way of lo-

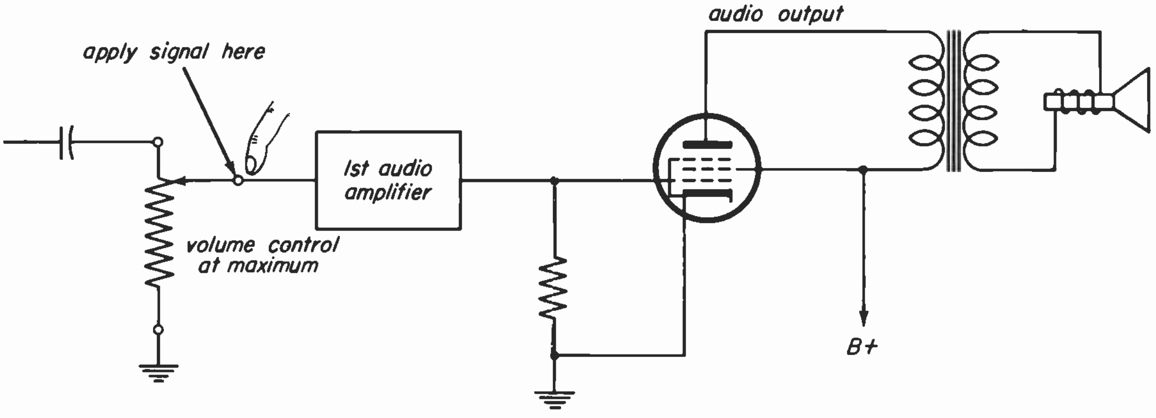

Fig. 39-32

calizing this defect is by feeding a phono or radio signal to the input of the audio amplifier. If the sound is still distorted, the trouble lies with the audio amplifier section. Otherwise, it is in the sound i-f section (probably in the sound detector). A pair of headphones or a small speaker may be temporarily connected to the output of the sound detector. With the volume control at minimum position, distortion of the sound-detector output is easily recognized.

By means of the procedures outlined, we can localize the sound trouble to either the sound i-f section or the audio-amplifier section. Once section localization has been accomplished, it is necessary to localize to one stage. This procedure will be divided into two general parts, each applying to one section.

LOCALIZATION WITHIN THE SOUND I-F SECTION

39-12. Assume that the trouble is no sound, and that we have localized it to the sound i-f section. The case of weak and distorted sound will be discussed separately. It is not too practical to use signal injection to localize troubles within the sound i-f section, because of the high frequencies involved. *Signal tracing* is more satisfactory. In the case of *no sound*, the tube clicking method may prove helpful. This method was described in previous lessons. The procedure is to plug a tube in and out and listen for a loud click in the speaker (volume control on full). Start with the sound detector tube and move toward the sound take-off point. A stage which produces no clicks is defective. The clicking method is not as satisfactory if the trouble is weak sound, since it is difficult to judge the intensity of the clicks.

Another method of signal tracing in the sound i-f section involves the use of a d-c meter. How to check the output of the sound detector with a meter has already been explained. The method of checking the other sound i-f stages with a d-c meter is shown in this diagram:

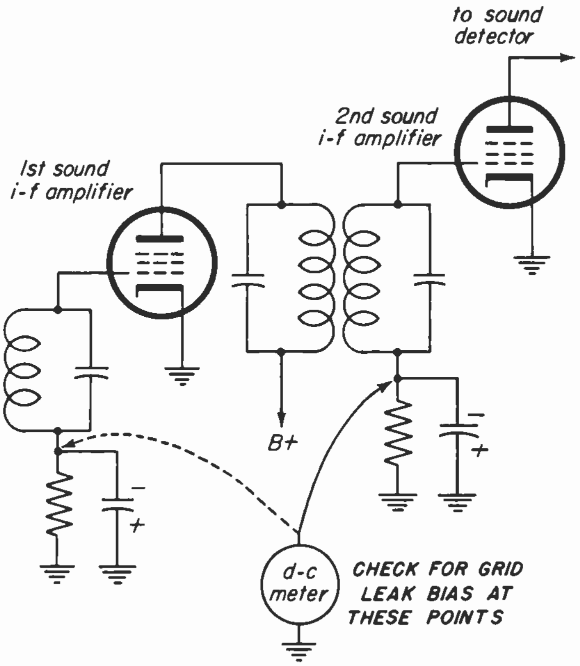

Fig. 39-33

Many sets use grid-leak bias on the sound i-f amplifier stages. Grid leak bias is developed by the rectification of signal (and noise). Therefore, if there is no signal, there is no bias. A quick check can be made to see if the signal is reaching the tube in question by looking for the grid-leak bias. For example, in Fig. 39-33, if bias can be measured on the grid of the first stage but not on the second stage, the trouble lies between these two points.

If grid-leak bias is found on the second sound i-f stage, but there is no d-c output from the sound detector, the trouble lies between these two stages. Once the defective stage has been found, it is necessary to find the defective component. The general procedure for troubleshooting amplifiers and rectifiers is followed.

Weak Sound In Sound I-f Section. – Stage localization for weak sound due to a defect in the sound i-f section is, in general, the same as localizing for no sound. One method, as previously described, is to check the grid-leak bias voltages. If the picture is good but one of the bias voltages is low, the fault precedes the *first* point of low bias. For example, if the bias voltage of the first stage (Fig. 39-33) is normal but that of the second stage is low, the defect is between the grids of the two stages. If the bias on the first and second stages is normal but the d-c sound detector output voltage is low, the trouble lies between the grid circuit of the second i-f stage and the output circuit of the sound detector. If the bias and detector readings are not conclusive, the other voltages and the components in the entire sound i-f section must be checked. Distortion will be discussed in a later section.

LOCALIZATION WITHIN THE AUDIO AMPLIFIER SECTION.

39-13. We will now assume that there is no sound but normal picture, and that the trouble has been localized to the audio amplifier section. The tube clicking method is usually tried first. First plug the audio output tube in and out. If there are no loud clicks, the trouble is either in the audio-output stage or in the speaker. If there are clicks at this point, the trouble precedes the audio output stage, and may be in the first audio amplifier or in the coupling circuits to the audio output stage. Component localization is then made by voltage and resistance measurements.

Another method of localization involves 60-cycle injection. Put your finger on the grid of the audio-output tube. A definite hum should be heard, although not as loud as that from the grid of the first audio-amplifier. If there is no hum, the trouble lies between the grid of the output stage and the speaker. If hum does appear, the trouble precedes the grid of the output stage, and lies between the output of the sound detector and the grid of the audio output stage. This principle is illustrated in Fig. 39-34.

The condition of no sound may also be caused by defects in the output circuit of the audio-output tube (usually the output transformer), or the loudspeaker itself. Troubles in the speaker will be considered in a later section. One of the defects which may occur in the output circuit is a shorted condenser across the primary of the output transformer, as shown in Fig. 39-35.

This condenser is inserted to change the frequency response of the amplifier. If it shorts, it will not affect the voltages greatly but will cause no sound. This happens because, with the primary shorted out, no signal gets to the speaker. To localize this we may measure with an a-c meter, as shown in Fig. 39-35, to determine the presence of signal at the grid of the audio-output tube. If signal input to this stage is found, but no sound, and the voltages look normal, check for a

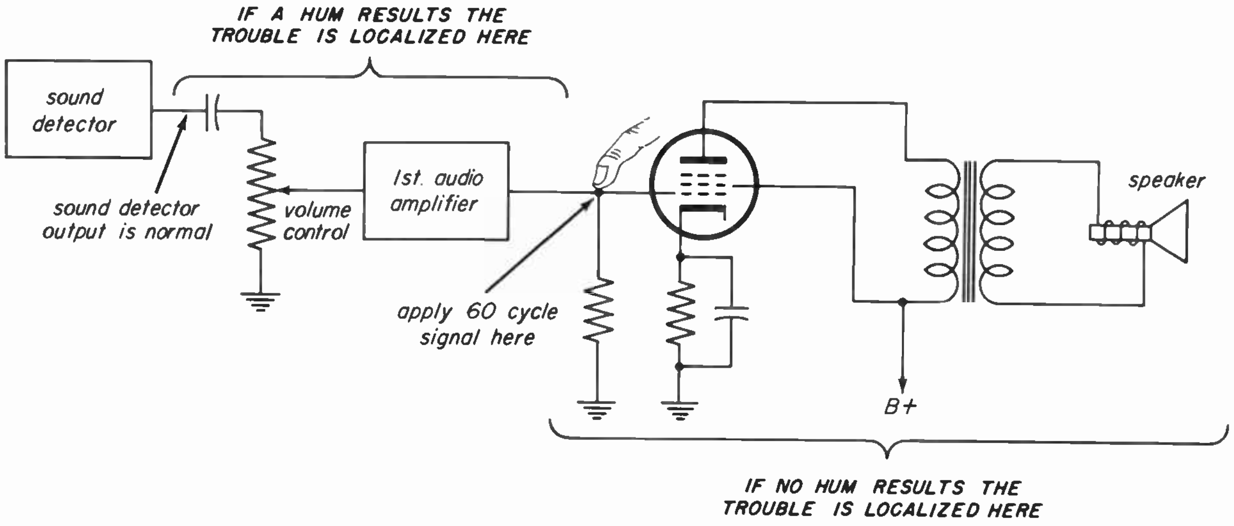

Fig. 39-34

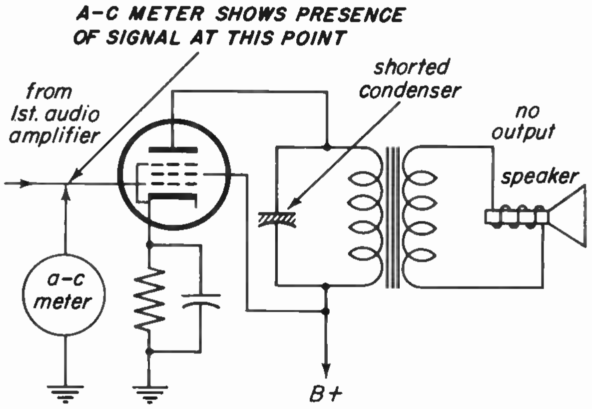

Fig. 39-35

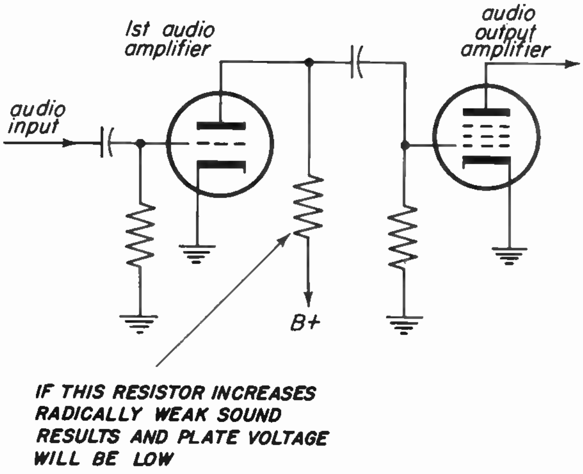

Fig. 39-36

short across this condenser. Another trouble which may occur in the output circuit is an open secondary in the output transformer. This is difficult to check for continuity, since the secondary is paralleled by the low-resistance voice coil. It is necessary to unsolder one lead of the voice coil to check the winding. One test which may suggest an open secondary (or open voice coil) is to look inside the output tube at the screen-grid wires. If the screen glows red hot, it means that the load has been removed from the plate. This might be the result of an open secondary.

Weak Sound Due to Audio Amplifier. – The most common cause of weak sound due to the audio amplifier is tube trouble. This applies particularly to the first audio amplifier tube, which provides most of the audio gain. Another common cause of weak sound is an increased value of plate load resistor in the first audio stage, as illustrated in Fig. 39-36. If this happens, you may measure low plate voltage on the 1st audio amplifier.

LOUDSPEAKER TROUBLES

39-14. Certain troubles resulting in weak or no sound are caused by the loudspeaker itself. Weak sound due to a speaker defect is usually also distorted. The best way to check a speaker is to replace it with one known to be good. The serviceman might carry a miniature speaker, or even a headphone, equipped with alligator clips, for this purpose. The good unit is clipped in across the voice-coil terminals of the suspected speaker. It is usually not necessary to disconnect the speaker being checked. This substitution procedure also helps to localize audio-distortion troubles between the speaker and the amplifier.

One common speaker trouble is rubbing of the voice coil on the field magnet. This is illustrated here:

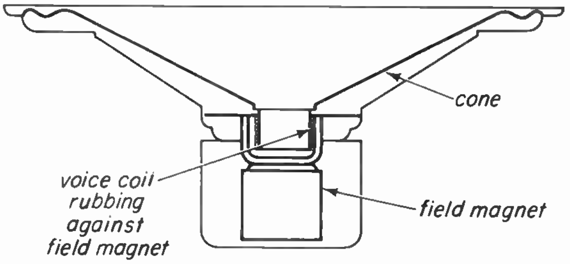

Fig. 39-37

Normally the voice coil is freely suspended so that it does not touch the field magnet. However, since the clearance between the voice coil and the magnet is very small, it is possible for the coil to rub against the magnet if the cone becomes misaligned. If this happens, the sound takes on a "raspy" effect. To check for rubbing, place the thumb of each hand on opposite sides of the speaker cone and gently move the cone in and out. If the voice coil is rubbing you can hear it, and also feel the effect on your fingers. On most speakers, it is very difficult to realign the voice coil, since the cone and voice coil support are cemented into place. The usual solution is to replace the speaker.

The voice coil may become shorted due to rubbing or overheating. This trouble is localized to the speaker by the methods already described. If the coil is shorted but not rubbing, there may be no sound, or weak sound. It is difficult to make a resistance check of the voice coil because its normal d-c resistance is extremely low. Of course, if the voice coil is shorted to the magnet, it can be checked by an ohmmeter. In general, if the trouble is traced to the speaker, and it cannot be easily repaired, the speaker is replaced.

In some cases the voice coil may open up. This takes the load off the plate of the audio-output tube. If this occurs, the screen grid of the audio-output tube will become red hot. Be sure to unsolder one of the voice coil leads to determine whether the trouble is there or in the secondary of the output transformer.

In some cases, the voice coil may actually get stuck. This prevents the speaker cone from vibrating freely and the result is little or no sound. This trouble can be detected by flexing the cone gently and observing whether the voice coil is free to move.

Torn Cone. – Some damages to the paper cone do not affect the performance of the speaker, while others do. For example, small holes or punctures in the cone have no noticeable effect. On the other hand, a *split* in the cone may produce an annoying rattle or buzz. If the split is severe enough, the cone alignment may be affected and cause the voice coil to rub. Split cones may often be repaired with cellophane tape or cement if the cone is not warped or distorted. If cement is used, be careful not to pull the cone out of shape, but cement between the two edges of the split.

DISTORTED SOUND

39-15. – There are several factors that may cause sound distortion. One of these, which is not due to a fault of the receiver, is known as multi-path sound distortion. Multi-path FM sound distortion is caused by the same signal arriving at the antenna at different times. This may happen if part of the signal is reflected by a building or other obstacle, and arrives at the receiving antenna out of phase with the direct signal. This is the same condition which causes ghosts in the picture. These out of phase sound signals combine in such a way as to produce distortion. Nothing can be done to the receiver to eliminate this type of distortion; it is an antenna problem. Re-positioning of the antenna may remedy the trouble. This type of distortion may appear on some channels but not on others. This will help identify it as not being caused by the set.

Localizing Sound Distortion. – The best way to localize sound distortion is by a *listening test.* To localize between the sound i-f and audio amplifier sections, disable the audio amplifier by taking out the first audio-amplifier tube. A pair of headphones or a small speaker are then connected across the volume control. Listen to the sound. If it is distorted, the trouble is probably in the sound detector. If a separate amplifier is available, the output of the sound detector may be fed into it to check for distortion. This amplifier might be part of a radio, TV set or any other such device.

Distortion in the Sound Detector. – The only stage in the sound i-f section usually capable of producing distortion is the sound detector. Such distortion may appear if one of the diode sections of the detector tube is malfunctioning. Replacing the tube will quickly check this. Another cause of sound distortion is misalignment of the sound detector transformer, particularly of the secondary. The only solution here is to realign the transformer. However, you might try readjusting the secondary (making a note of the original setting) to see if the distortion clears up. If it does, the trouble usually is cured.

Distortion in the Audio-Amplifier Section. – If localizing tests indicate that no distortion exists in the sound i-f amplifier section, the trouble must be in the audio-amplifier section. Troubles in the loudspeaker have already been covered. Assuming the speaker to be normal, the trouble causing the distortion must be in one of the two audio-amplifier stages. The tubes should be checked first. It is helpful to localize the particular stage causing the distortion. This may be done by connecting a small speaker or a pair of headphones to the output of the first audio amplifier (or input to the second). If distortion is heard at this point, the first audio amplifier is at fault; otherwise the trouble is in the second stage. Distortion in an audio amplifier is usually caused by one of two things: (1) signal input beyond the normal amplifier operating range, (2) reduced operating range of the amplifier. Of the two causes, we can generally ignore the first so far as TV receivers are concerned, due to the location of the volume control. Since it precedes the two stages, an input signal of any desired amplitude may be selected. However, the second factor is important. If the operating range of the amplifier is reduced, compression of the audio signal may occur on the positive, negative, or both peaks of the signal. This produces distortion of the signal, commonly known as amplitude distortion. Amplitude distortion is most often caused by *incorrect bias* in an amplifier. The first audio-amplifier stage usually operates with so-called "contact" bias. This bias is obtained by means of a resistor of about 10 megohms in the grid circuit. If distortion occurs in the first stage, be sure to check this grid resistor.

A common cause of bias change in the second (output) audio stage is a shorted coupling condenser. This places a positive voltage on the grid of the second stage, changing the bias. This may result in severe audio distortion. Methods of checking for a shorted coupling condenser have been described in detail in previous lessons. If a fixed bias source is used, this should be checked. If cathode bias is used, check the cathode resistor and condenser. An *open* cathode condenser will not cause distorted sound, but may actually improve it, although at the expense of some gain. However, a *shorted* cathode bypass condenser may cause distorted sound. Likewise, an incorrect value of cathode resistor will alter the bias and may cause distortion.

Undesired Slope Detection. – It was explained earlier in this lesson that detection of an FM wave could be accomplished by positioning the FM carrier on the slope of a response curve. Undesired slope detection may take place in a TV set. If the sound-detector tube burns out, sound may sometimes still be heard. In this case, the fine tuning control is set so that the FM carrier is on one of the slopes of the sound i-f response curve, and slope detection takes place. In some cases, it may be difficult to tell that anything is wrong with the sound. However, the sound may be weak and the d-c output of the sound detector will be low or zero.

TROUBLESHOOTING INTERCARRIER SOUND RECEIVERS

39-16. Generally, troubleshooting the FM sound channel in intercarrier sets follows the procedure outlined in this lesson. However, several points should be kept in mind when working on intercarrier sets. One is that turning the fine tuning control does *not* change the FM sound i-f carrier. This is always 4.5 megacycles, the difference between the picture and sound carriers.

This means the proper i-f frequency is applied to the sound i-f section regardless of the position of the fine tuning control. As a result we cannot use this control as a check on the operation of the sound detector, as we were able to do for a split-sound receiver.

Another point to keep in mind has to do with the alignment of the common i-f stages. These are the i-f stages carrying both picture and sound. It is possible for these stages to be so aligned that the picture appears normal, but with little or no sound. This may happen if the sound i-f carrier side of the response curve is too low at the sound-carrier frequency. A trouble of this type may look as if it is in the FM sound channel, although it is actually in the common i-f stages, It may be checked in the field by making minor adjustments of the i-f's affecting the high frequency side of the common i-f response. If this is attempted, note the original position of the adjustment, so you can return it if necessary. The same type of trouble can occur in split-sound receivers, in which the sound is taken off after passing through one or more common i-f stages.

When the sound is taken off at the converter plate circuit the picture i-f alignment does not affect the sound.

AUDIO OSCILLATIONS

39-17. Under certain conditions the audio amplifier may break into oscillation. This results in a "howl" or high-pitched tone from the speaker. In order for the audio amplifier to oscillate, it is necessary that some of the output energy of the second audio amplifier (output stage), be fed to the input circuit of the first audio stage. When this happens, the output voltage of the second stage is in the right phase to sustain oscillation if fed into the first stage. This feedback is usually due to improper lead dress. Often the plate lead of the output transformer is too close to the grid lead of the first audio stage. Usually, moving the transformer lead away from the first audio grid will stop the oscillation.

◆

NOTES

NOTES

GET HELP FOR HEAVY or AWKWARD LOADS

NATIONAL SAFETY COUNCIL CHICAGO. • PRINTED IN U.S.A.

SCHEMATIC DIAGRAM FOR RCA KCS66 OR 66A TV CHASSIS (MODELS 17T153, 17T155, 17T160, 17T174)

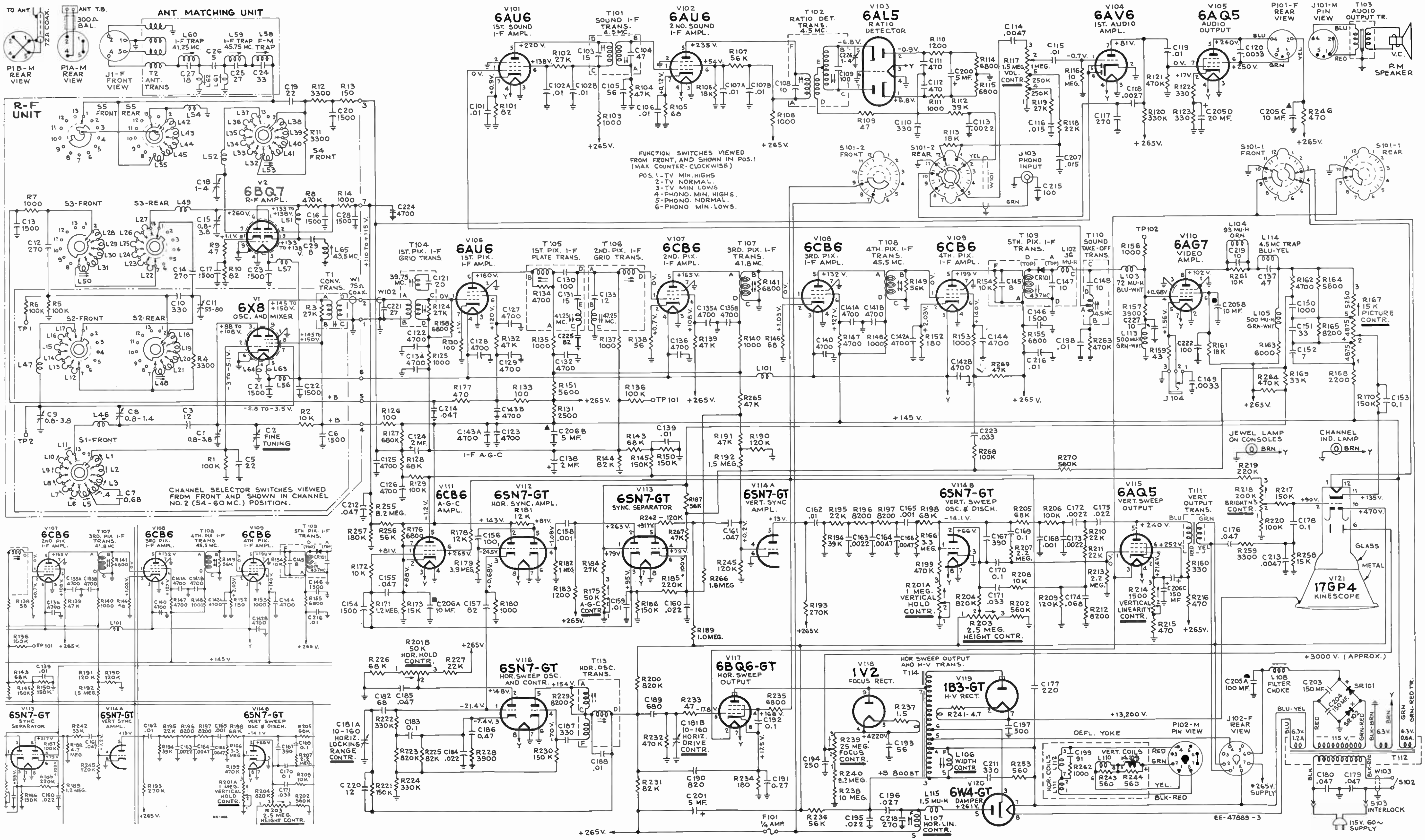

In a few early production receivers the V113 sync separator circuit was wired as shown in the above partial schematic diagram. R265, R268, R269, R270 and C223 were omitted and R153 was connected to the +145 volt bus.

In some receivers, focus bleeder resistors R238 was 12 meg and R240 was 15 meg. In some receivers, R238 and R240 are combined into one 18 meg resistor.

In some receivers, R264 (in video amp at sync take-off) was 220 k.

In some receivers, r-f unit terminal 7 by-pass capacitor C224 was omitted.

In some receivers, terminal C of I-F trans. T105 was connected to ground and C225 was omitted.

In some receivers ratio detector trimmer C226 was omitted.

In some receivers, C193 was connected from V118-5 to ground.

In some receivers a 22 k resistor, R142 was connected from V110-8 to junction of L105, L114.

In some receivers, C227 (at video amp) was omitted.

All resistance values in ohms.
K = 1000.

All capacitance values less than 1 in MF and above 1 in MMF unless otherwise noted.

Coil resistance values less than 1 ohm are not shown.

Direction of arrows at controls indicates clockwise rotation.

All voltages measured with "VoltOhmyst" and with no signal input. Voltages should hold within ±20% with 117 v. a-c supply.

SCHEMATIC DIAGRAM FOR EMERSON 120162-A TV CHASSIS (MODEL 709A)

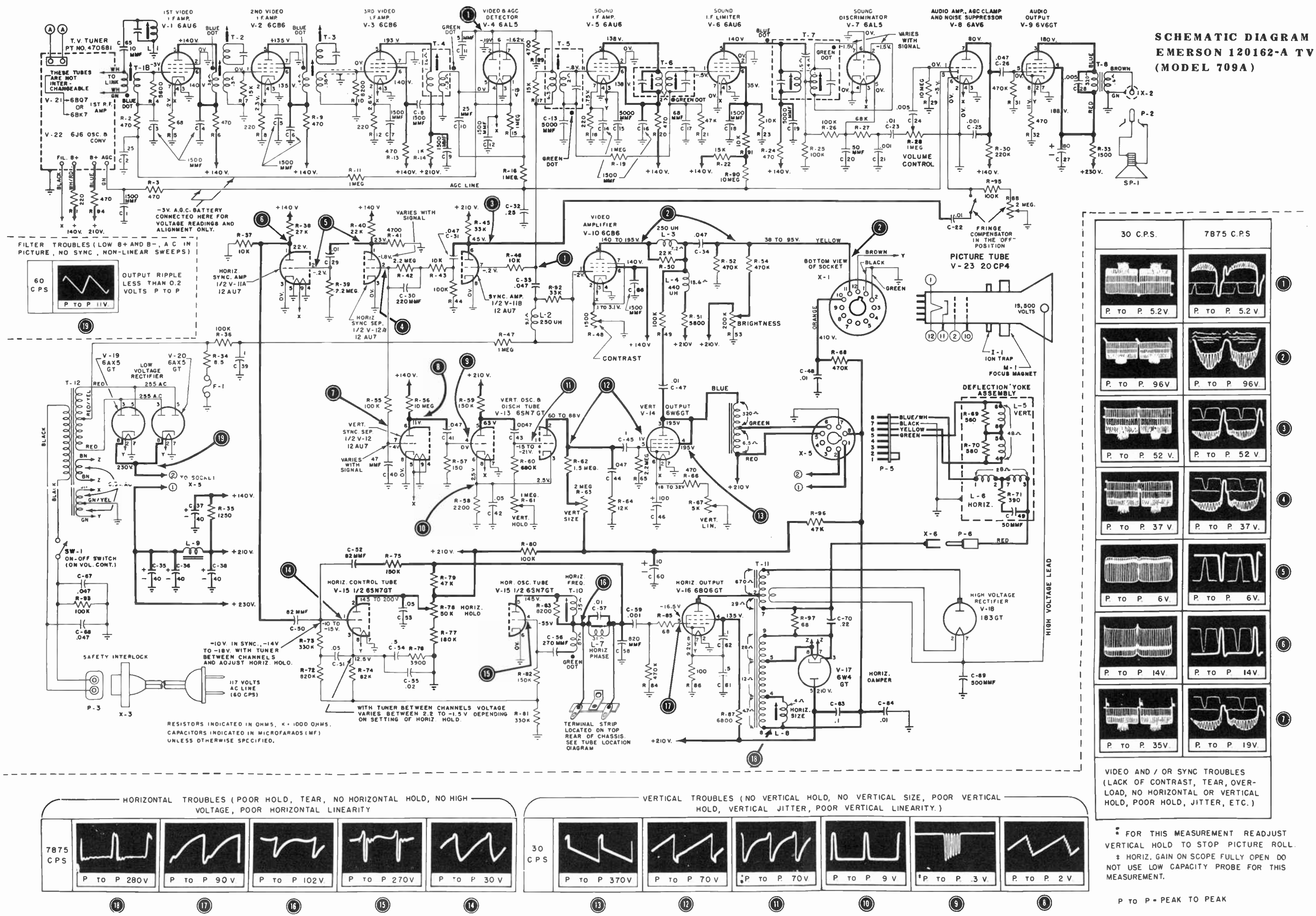

RESISTORS INDICATED IN OHMS, K = 1000 OHMS.
CAPACITORS INDICATED IN MICROFARADS (MF)
UNLESS OTHERWISE SPECIFIED.

* FOR THIS MEASUREMENT READJUST VERTICAL HOLD TO STOP PICTURE ROLL.

‡ HORIZ. GAIN ON SCOPE FULLY OPEN DO NOT USE LOW CAPACITY PROBE FOR THIS MEASUREMENT.

P TO P = PEAK TO PEAK

SCHEMATIC DIAGRAM FOR ADMIRAL 21D 1, 21E1 TV CHASSIS (16" ROUND TUBE)

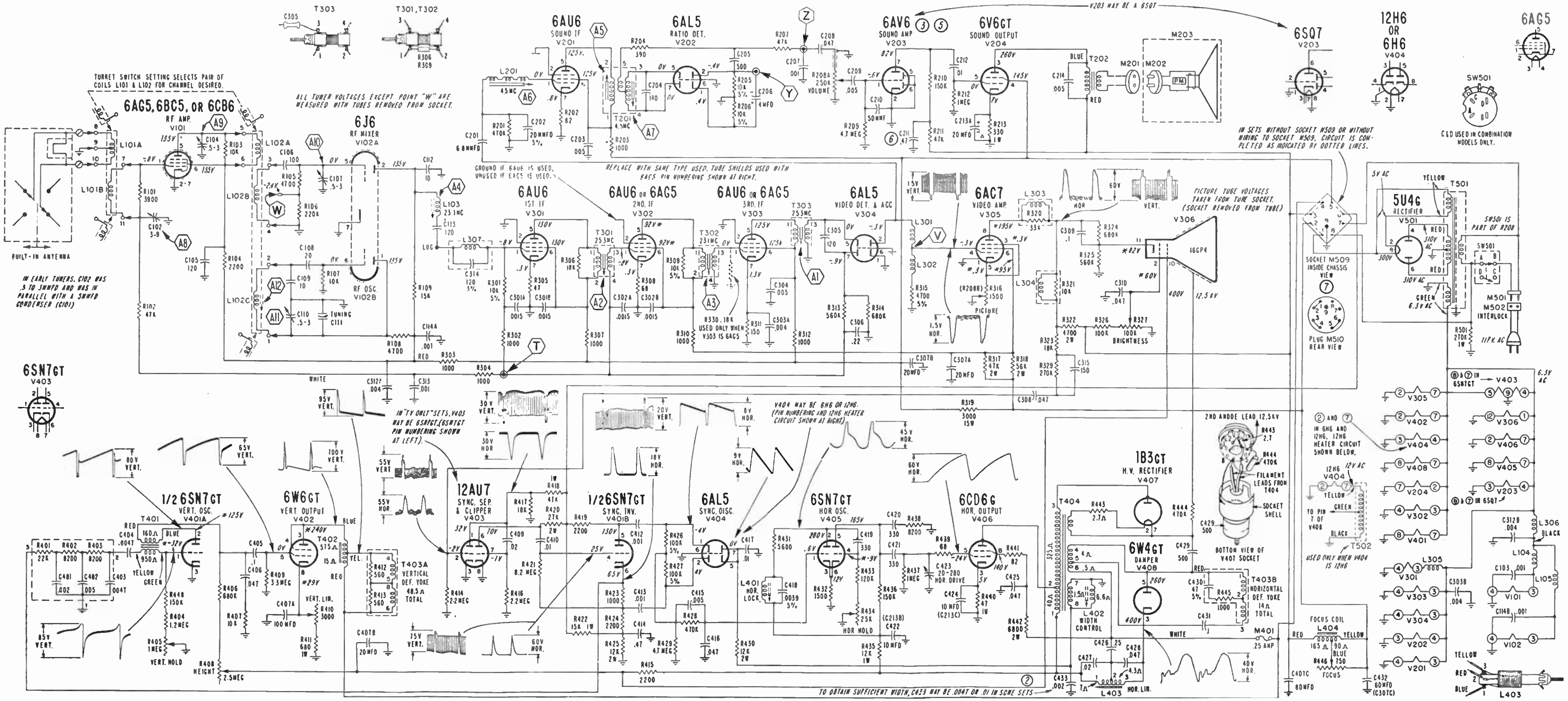

SCHEMATIC DIAGRAM FOR SYLVANIA 1-387-1 TV CHASSIS (MODEL 22M)

Reproduced on these fold-out pages are four TV receiver schematic diagrams, as additional reference material for your servicing work.

PARTS CODING

RF TUNER	C1 - C49, R1 - R49
SOUND SECTION	C100 - C125, R100 - R126
VIDEO IF SECTION	C126 - C154, R127 - R162
L V POWER SUPPLY	C155 - C167, R163 R175
SYNC SEPARATOR & VERTICAL SWEEP SECTION	C168 - C191, R176 - R214
HOR SWEEP & H V SUPPLY SECTION	C192 - C225, R215 - R250

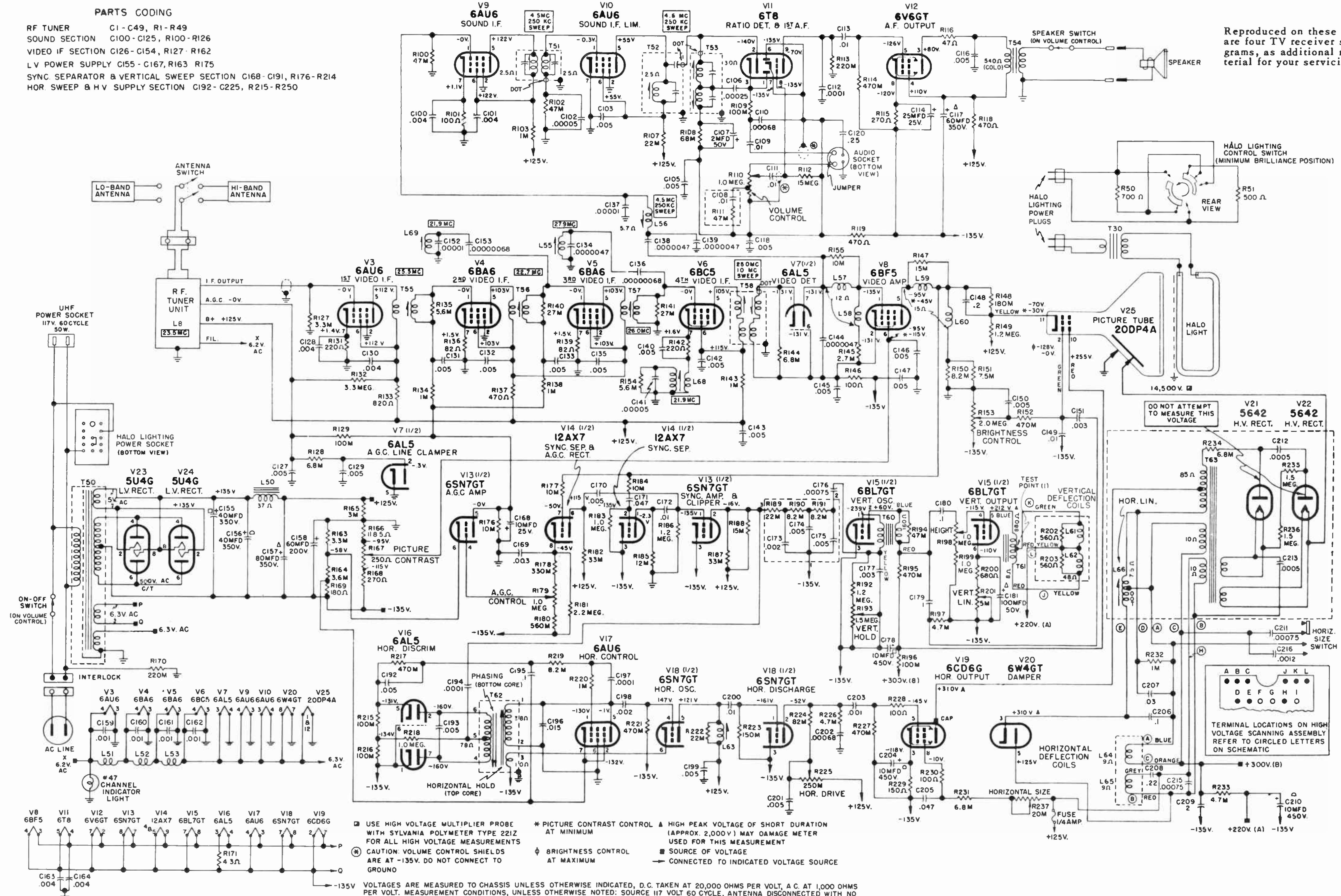

USE HIGH VOLTAGE MULTIPLIER PROBE WITH SYLVANIA POLYMETER TYPE 221Z FOR ALL HIGH VOLTAGE MEASUREMENTS

(✱) CAUTION: VOLUME CONTROL SHIELDS ARE AT -135V. DO NOT CONNECT TO GROUND

* PICTURE CONTRAST CONTROL AT MINIMUM

ϕ BRIGHTNESS CONTROL AT MAXIMUM

▲ HIGH PEAK VOLTAGE OF SHORT DURATION (APPROX. 2,000V) MAY DAMAGE METER USED FOR THIS MEASUREMENT

■ SOURCE OF VOLTAGE

→ CONNECTED TO INDICATED VOLTAGE SOURCE

VOLTAGES ARE MEASURED TO CHASSIS UNLESS OTHERWISE INDICATED, D.C. TAKEN AT 20,000 OHMS PER VOLT, A.C. AT 1,000 OHMS PER VOLT. MEASUREMENT CONDITIONS, UNLESS OTHERWISE NOTED: SOURCE 117 VOLT 60 CYCLE, ANTENNA DISCONNECTED WITH NO SIGNAL INPUT, PICTURE CONTRAST AT MAXIMUM, BRIGHTNESS AT MINIMUM — OTHER CONTROLS AT NORMAL POSITIONS.

AVERAGE VOLTAGES AND COIL RESISTANCES ARE INDICATED. RESISTANCE OF TAPPED COILS IS FOR ENTIRE WINDING. COIL RESISTANCE IS NOT SHOWN WHERE READINGS ARE TOO SMALL OR WIDELY VARIABLE.

HOME STUDY
TELEVISION
SERVICING COURSE

PREPARED BY

RCA INSTITUTES, INC.

A SERVICE OF RADIO CORPORATION OF AMERICA

HOME STUDY DEPARTMENT
350 West 4th St., New York 14, N. Y.

UNIT TEN

Lesson 40: THE OSCILLOSCOPE
Lesson 41: RECEIVER ALIGNMENT
Lesson 42: REDUCING INTERFERENCE
Lesson 43: TEST EQUIPMENT

TELEVISION SERVICING COURSE

PREPARED BY

RCA INSTITUTES, INC.
A SERVICE OF RADIO CORPORATION OF AMERICA

HOME STUDY DEPARTMENT
350 West 4th St., New York 14, N. Y.

LESSON FORTY

THE OSCILLOSCOPE

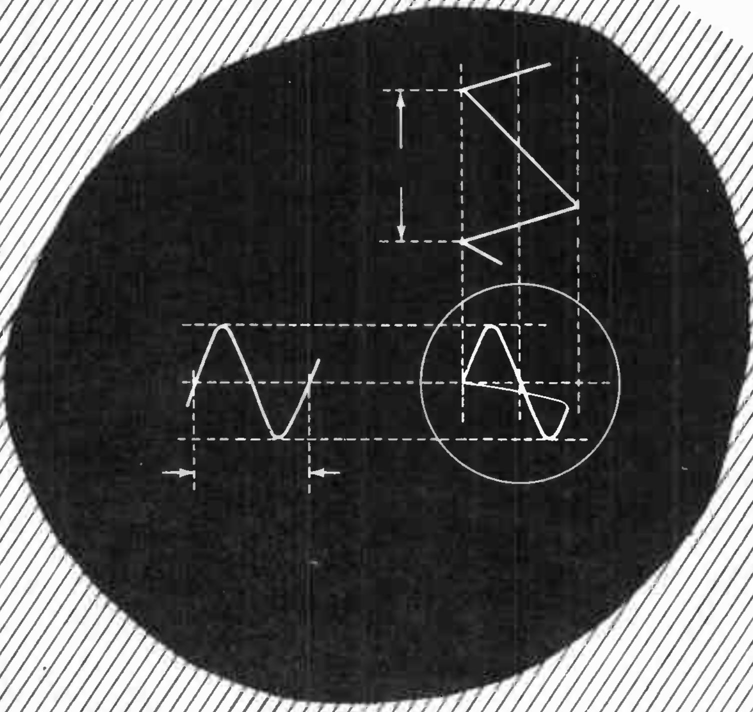

Lesson 40

USES OF THE OSCILLOSCOPE

40-1. The oscilloscope (usually called the "CRO" or "scope") is the only test instrument which shows us the actual waveform of the signal or voltage being fed to the scope. It does this by showing the relationship between two quantities – amplitude vs. time – in the form of a graph. Thus we see on the cathode-ray tube (CRT) the characteristic shape of the signal voltage, and can compare it with other waveforms or with the waveform photos provided by the manufacturers of TV sets in their service data.

Observation of waveforms at various points in the television circuits is an aid to troubleshooting, and makes possible signal tracing video and sync circuits. Knowing, from the manufacturer's literature or from experience, that the signal should have a certain waveform at a given point in a receiver, we can immediately note any difference between the actual and the desired waveform. In the case of hard-to-locate troubles, we can check each suspected stage with the scope to localize the defective one. This form of signal tracing offers advantages over the a-c meter method, since the meter tells us only whether or not an a-c voltage is present and its rms or average value. The scope shows the frequency, true amplitude, distortion and other characteristics of the signal as well.

Another use of the scope is in measuring *peak-to-peak* values of a-c voltages. The scope gives better accuracy than D'Arsonval or vacuum-tube voltmeters, which usually read only *average* or *rms* values. (Peak-indicating vacuum-tube voltmeters are made, but are not in common use.) The scope is particularly valuable for measuring values of non-sinusoidal waveforms, on which vacuum-tube voltmeters often give inaccurate readings. When the scope is used for voltage measurement, it is operated in the same manner as when waveforms are observed. The procedure consists of comparing the size of a known voltage waveform as it appears on the screen with the size of the waveform of an unknown voltage.

Finally, the scope may be used to show the relationship between almost any two electrical quantities. In practical service work the only use made of this function is in visual alignment. When used for alignment, the scope shows graphically how well a circuit or group of circuits responds to signals of the same amplitude at different frequencies. We use the frequency-response curve in the alignment of radio and television sets to indicate whether the circuits are adjusted correctly to receive all the information transmitted. This is a very important subject in itself, and is treated separately in Lesson 41.

Basic Function of the Scope. – The ability of the scope to produce graphs showing the relationship between two electrical quantities is its basic operating feature. The waveform of any voltage, as we are accustomed to representing it, is nothing more than a graph illustrating the instantaneous *amplitude* of the voltage at consecutive instants of *time*. When we draw a sine wave, for example, the vertical distance of the curve from the centerline represents amplitude and the left-to-right distances represent time.

When we draw a graph, we plot the variations of one quantity in a *vertical* direction, showing their relationship to the *horizontal* variations of another quantity. It makes no difference which quantity is drawn horizontally and which vertically, save that the graph is easier to recognize if it is drawn conventionally. The important factor is: *two quantities are shown, both of which are varying.* This is represented at *a* of Fig. 40-1.

If one quantity is varying and the other is constant, only a horizontal or vertical straight line can result. This is shown at *b*. If *both* quantities are constant, the "graph" becomes a dot, as at *c*.

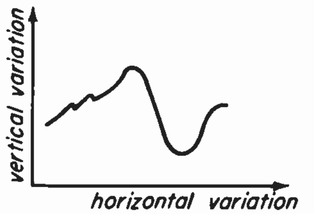

(a) Two quantities, both varying

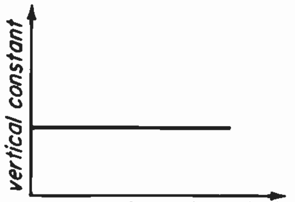

(b) Two quantities, one varying

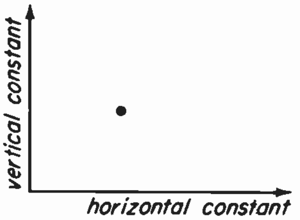

(c) Two quantities, neither varying

Fig. 40-1

The scope, using a cathode-ray tube which is very similar to a kinescope with electrostatic deflection, is capable of reproducing all three types of graphs mentioned above, *electrically*.

Often both electrical quantities to be compared are fed to the scope from external sources, as in alignment, but in the case of waveforms one quantity is *time*. The horizontal component of a waveform is referred to as the *time base*, and we must provide an electrical signal which will make the CRT reproduce the horizontal time base correctly. This signal is generated in the scope circuits and usually is a sawtooth voltage. Thus it is sometimes convenient to think of the scope as a device which places the waveform of an external signal on a time base provided by the instrument itself.

Scope Limitations. – Despite its versatility and usefulness, the scope is not an electronic magic wand. It has its limitations, such as the range of frequencies which can be reproduced with accuracy, and the ability to reproduce weak signals (sensitivity). These limitations vary from one instrument to another. Some scopes are designed to have good response to high frequencies, others are built for sensitivity, etc.

In addition to the limitations of the scope itself, improper methods of operation can result in misleading presentations on the screen. One example of this would be when the vertical gain control is left too high on a fairly strong signal, overloading the internal vertical amplifier circuits. The presentation on the face of the CRT would be distorted, and we might blame this on the circuit under test, although the trouble would actually be in the operating procedure.

Fortunately, the frequency limitations of the scope do not place serious restrictions on most servicing work and it's possible, once we're familiar with the instrument, to use it at the higher frequencies by compensating for the limitations. For instance, we know that square waves, such as blanking pulses, are made up of a fundamental wave and numerous harmonics. Since many of the harmonics will be above the range of the scope, we expect these higher frequencies to be attenuated and are not confused when the square blanking pulses appear on the screen with rounded corners and slightly sloping sides. We can still check the fundamental frequency and measure the peak-to-peak amplitude. And, if necessary, we can look at the pulses from a receiver we know is operating correctly and use their shapes as a standard of comparison.

HOW THE SCOPE OPERATES

40-2. While many different circuits are employed in commercial scopes, they are all designed to perform the same functions. There are five basic sections of the scope, as follows:

1. CRT
2. Power supply
3. Vertical and horizontal amplifiers

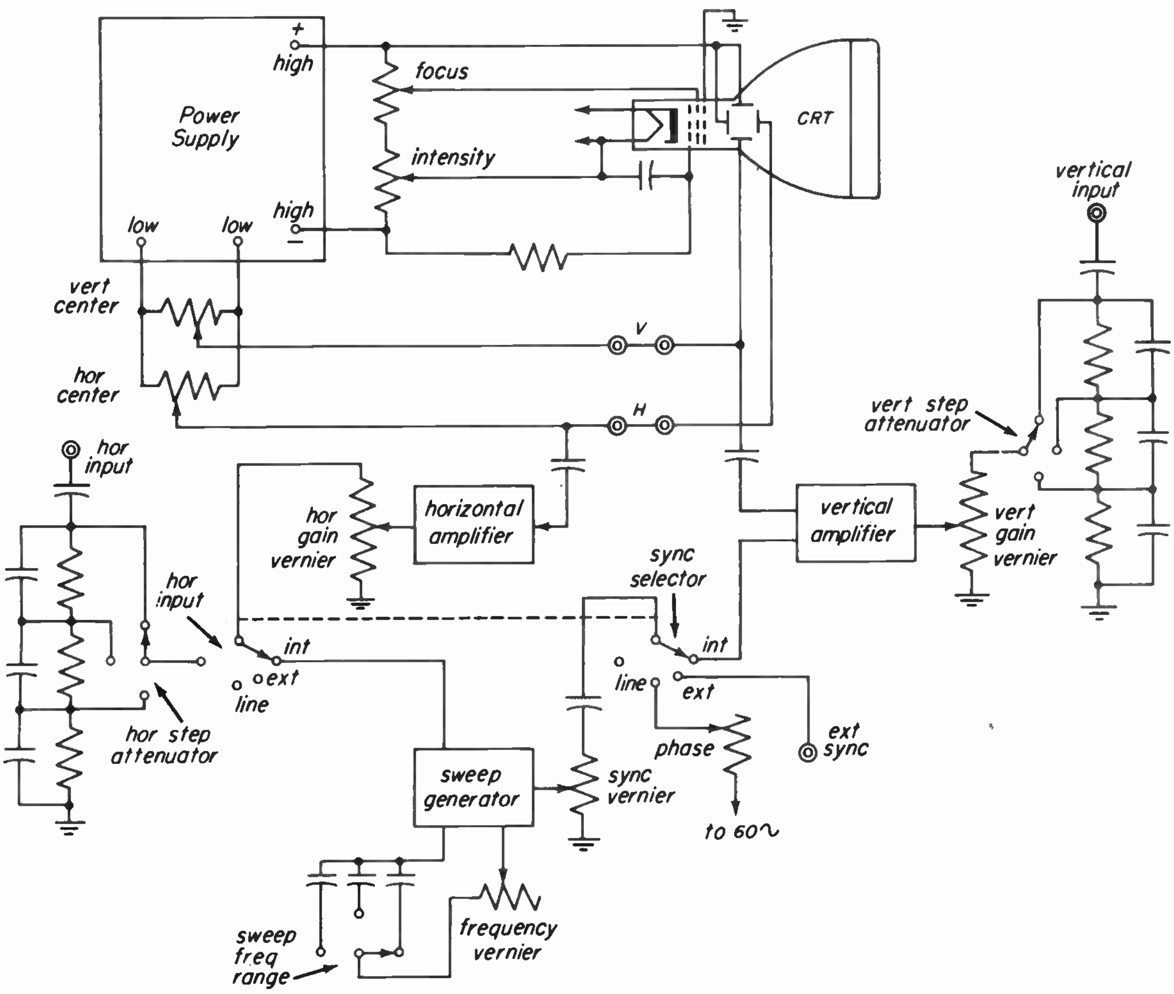

Fig. 40-2

4. Sweep and sync circuits
5. Controls

A conventional arrangement of these sections is shown in Fig. 40-2, illustrating the controls necessary for operating flexibility.

The Cathode-ray Tube. – Since we've studied electrostatic deflection picture tubes already, it will be sufficient here to mention how cathode-ray tubes used in scopes differ from picture tubes. Actually, even these differences are slight, and the principles of operation remain exactly the same – the electron beam is deflected up or down and right or left by the relative strengths of the electrostatic fields between two pairs of plates.

Fig. 40-3 shows how the CRT can exactly duplicate by electrical means the three graphs of Fig. 40-1. Parts *a*, *b* and *c* correspond to *a*, *b* and *c* of Fig. 40-1. The drawing at *c*, Fig. 40-3, illustrates that when we apply different voltages to the opposing sets of deflection plates, the CRT plots the graph of one voltage varying with respect to the other.

The most common sizes of CRT for the oscilloscope are 3, 5 and 7 inches, although larger tubes are found in some laboratory models. The fluorescent coating on the face of the CRT usually produces a luminous green spot or trace, instead of the white found in picture tubes. The green affords much better visibility under all viewing conditions, and makes for easier reading of complex waveshapes. Anode voltages are somewhat lower than those used in TV sets, from an average 750 volts for a 3-inch CRT to an average of around 1,500 volts for a 7-inch tube. The better scopes often

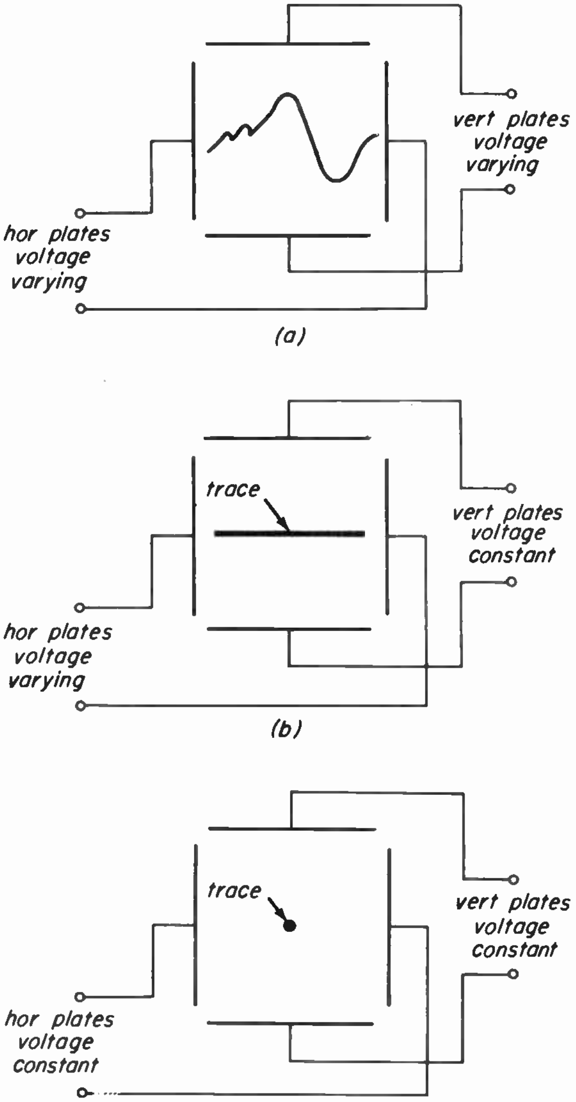

(a)

(b)

(c)

Fig. 40-3

use metal-shielded CRT's, and carefully shield the power transformer and supply section, to reduce hum pickup and resultant hum deflection, which distorts the response.

The *deflection sensitivity* of the CRT is the ratio between a potential applied to the plates (usually the vertical plates) and the amount of deflection of the electron beam produced by it. This ratio is ordinarily in volts per inch. A typical tube requires about 30 volts across the vertical plates to move the spot up or down one inch.

This figure applies only to the deflection sensitivity of the CRT itself. Commercial practice is to give the sensitivity of the oscilloscope, which includes the gain of the vertical amplifier. For example, a typical sensitivity specification is 0.03-volts-rms per inch. This means that a signal of this strength applied at the vertical input terminal of the instrument will produce a one-inch deflection on the screen with the vertical-amplifier stages running at full gain. Assuming that the CRT itself requires 30 volts to produce an inch of deflection, the vertical amplifier must have a maximum gain of 714. Since the input is given in rms volts, we first find the peak input voltage – $0.03 \times 1.4 = 0.042$. This is divided into the voltage required by the CRT – $30/0.042 = 714$. The result is the gain which must be provided by the amplifier.

It is more convenient to rate the scope sensitivity in this manner, since we can tell at a glance how strong the input signal must be to provide a pattern of readable size on the scope.

Power Supplies. – The nature of the CRT requires that two power supplies be used in the scope, although they are often built as one, using either one or two power transformers. The high-voltage supply, which feeds the focusing and accelerating electrodes has a very low current drain, while the low-voltage supply providing plate and screen voltages for the amplifiers and other operating voltages usually has a fairly high drain. The high- and low-voltage terminals are shown in Fig. 40-2.

Whether one transformer with several windings is used, or two separate ones, good shielding is important to reduce stray magnetic and electric fields which could cause hum distortion in the CRT. Usually the transformers are mounted in a location which will minimize any possible interference from stray fields.

Both the high- and low-voltage outputs are connected across bleeder networks (voltage dividers), which are tapped at the proper points to provide all necessary voltages for the operation of the scope. All the bleeders are not shown on the drawing. The positive side of the high-voltage supply is connected to the accelerating anode of the CRT, while the cathode is placed at a much more negative potential through the arm of the INTENSITY control, which makes it possible to control the electron-beam intensity by varying the grid-cathode potential. The focusing anode goes to the arm of the FOCUS pot, enabling us to vary the voltage on that anode and focus the beam to a small spot. The grid, of course, is operated at the most negative potential.

The positive side of the high voltage supply is grounded to the chassis, which is contrary to what we'd expect. This is common practice in oscilloscope circuits, although not employed in all scopes. Actually, as long as we have the necessary *difference of potential* between the accelerating anode and the cathode, it doesn't matter whether we connect the positive or negative side to the chassis. If we ground the plus side, we're simply placing the second anode at zero potential, and the other electrode voltages are considered *minus* potentials. One of the advantages of using this system is that direct connections can be made to the deflection plates (by means of the V and H terminals shown, which are usually mounted on the back of the scope) without danger of exposure to high voltage.

The high-voltage section of the power transformer is a large affair, due to the great number of turns required to step up the line voltage. Also, in a power supply of this sort there is always a threat of electrical shock. *This shock can be dangerous*, because the supply is capable of providing fairly high current, even though the normal drain is low. For these reasons, the r-f oscillator type of high-voltage supply is coming into common use. This is similar to the supply used in television receivers, except that the scope oscillator generally operates between 100 and 200 kc. The output of the oscillator is applied to the primary of a transformer much smaller than a comparable 60-cycle transformer. The secondary provides both high voltage and filament voltage for a high-frequency, half-wave rectifier tube. After rectification and filtering, a typical power supply of this type will give about 4,000 volts at 0.2 *milliampere*. The maximum possible output is about 7 ma, so the danger of serious shock is considerably reduced. Also, the air-core transformer offers considerable saving in weight, size, and cost. The circuit diagram of an r-f oscillator supply unit is shown in Fig. 40-4.

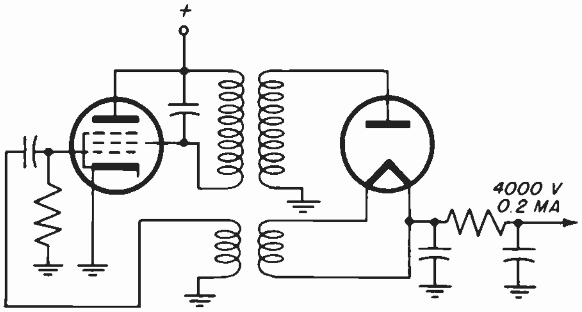

Fig. 40-4

When the accelerating anode of the CRT is at zero or ground potential, it is necessary to place one side of each pair of deflection plates at approximately the same value, to avoid a serious defocusing effect.

The other vertical and the other horizontal deflecting plates are supplied with d-c centering voltages and with the a-c signal voltages which will trace the information we want on the face of the CRT.

The centering voltages are provided by potentiometers in the bleeder across the low-voltage supply. These pots are so connected that one end is approximately 100 volts *positive* (with respect to the chassis ground) and the other end is about 100 volts *negative*. One deflection plate of each pair is at ground, so this voltage on the other plate enables us to place the spot at any desired point on the screen when no signal is present. Once the spot is centered, these d-c voltages remain on the deflection plates while the signal is applied – thus the electron beam is under the influence of two voltages while it is tracing the desired signal.

The low-voltage supply also furnishes all the other voltages required by the various circuits in the scope.

Horizontal and Vertical Amplifiers. – The horizontal and vertical amplifiers amplify the signals applied to the external terminals of the scope enough to give a readable deflection on the CRT. On the other hand, we sometimes use signals strong enough to overload the amplifiers, or to drive the beam off the screen, so it's important to have an input network feeding each amplifier which will give control of the signal amplitude. One such type of network is shown in Fig. 40-2.

The step attenuators are so arranged that signals can either be fed directly to the amplifiers, or be attenuated by a known amount. Usually, the attenuation steps are multiples of 10, giving ranges of 1 to 1, 10 to 1, 100 to 1, and 1,000 to 1. The capacitors across the attenuation resistors provide the same R-C constant on each range, and tend to prevent excessive loss of high-frequency response. The blocking capacitors in the vertical and horizontal leads block any d-c component which might be present with the desired signal. If d-c were permitted to reach the grid of the first amplifier tube, it would alter the bias and change the gain, giving false results in measurement and misleading response in any case.

The vernier gain controls enable us to obtain degrees of signal attenuation between the large steps provided by the switching system. In some cases, these verniers are located between stages of the amplifiers. Their exact location is not important.

There may be from one to three stages of amplification; a great variety of circuits are used in actual practice. The most important factor in these circuits is that all frequencies should be amplified equally. If they aren't, the scope will give a false indication of poor response, especially at the highest and lowest frequencies.

The scope response should be relatively flat – all frequencies amplified equally – up to at least three or four times the highest sweep frequency, which is usually 30 to 60 kc. Thus, the average good-quality scope is flat up to 250 or 300 kc (unless, of course, it is designed for some special application). Above this, the response tapers off gradually, so that the instrument can be used at considerably higher frequencies, if its limitations are borne in mind. Low-frequency response is equally important, especially for alignment work. In most scopes, the response becomes poor at about 30 cycles and falls off from here down to zero, which is d-c. This poor response is usually caused by the interstage coupling capacitors in the resistance-coupled amplifiers. Some scopes employ only direct-coupled amplifiers, and are able to amplify all signals down to and including the d-c component – these are usually called *d-c scopes.*

Provision is made at the input to the horizontal amplifier to select internally generated signals for the horizontal sweep instead of an external signal. This switch, which is ganged with the sync selector, as shown in Fig. 40-2, simply applies the output from the sweep generator to the horizontal amplifier. Other than this, the horizontal amplifier usually uses a circuit exactly like that of the vertical amplifier.

Sweep and Sync Circuits. – We know from earlier lessons that a linear sweep voltage is necessary, and how synchronization works, locking any sweep oscillator to the signal frequency. These basic principles apply to cathode-ray tubes exactly as they do to kinescopes, except that the only varying deflection voltage operating on the vertical plates is usually the signal voltage, and the beam intensity is ordinarily maintained steady.

Since we apply the signal voltage to the vertical plates, instead of to the grid (as in the kinescope), we only want one horizontal line on the screen. This is obtained by the vertical centering voltage already discussed. When the a-c signal is applied to the vertical plates, its variations in amplitude above and below zero cause the spot to move above and below where it was placed by the centering voltage. Fig. 40-5 illustrates this.

At *a*, we can place the spot in position (1) on the scope by adjusting the vertical and horizontal centering voltages. *With no deflection* on the *horizontal* plates, the spot cannot move to the right or to the left. If we apply an a-c sine wave to the vertical plates, however, the

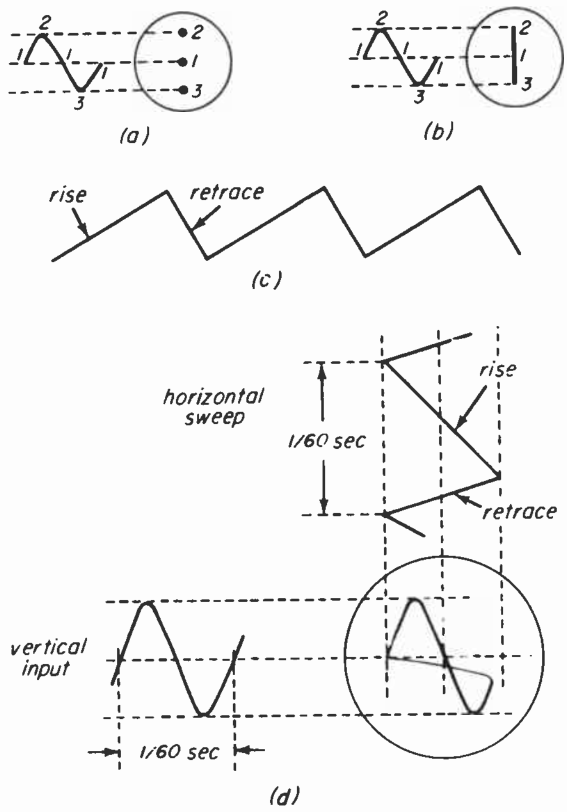

Fig. 40-5

spot can move up to position (2) at the maximum positive signal and down to position (3) at the maximum negative value. Of course, while the signal is rising and falling from (1) to (2) to (3) and back, the spot is also moving, so what we see on the screen is a straight vertical line, as shown at *b*.

In order to spread out the presentation on the CRT and make the spot trace an accurate picture of the signal input against a horizontal time base, we must move the spot from left to right. We must do this in step with the repetitions of the input signal. We already know the nature of this horizontal deflection voltage, from our study of the kinescope. It must be a perfectly linear sawtooth voltage, with a retrace time which is only a small fraction of the rise (sweep) time. This voltage appears at *c*.

When we apply a linear sawtooth voltage of the proper frequency to the horizontal plates and the a-c sine-wave signal to the vertical plates, we get the presentation shown at *d* on the drawing.

Notice that even though we've made the frequency of the sweep voltage exactly the same as that of the input signal, we do not get a graph of one *complete* cycle on the CRT – because it takes a small fraction of each cycle for the spot to return to the starting point. The retrace line appears only faintly, since the spot is moving very fast during this time. If we make the sweep frequency exactly *half* the signal frequency, the signal will have time to trace *two* cycles on the CRT during each left-to-right travel of the spot, so two cycles will be shown on the screen. The first cycle will be complete, and the second will be missing a small part of its curve, due to the retrace time.

This relationship always holds true – likewise, if the sweep frequency is one-third of the signal frequency, the screen shows three cycles; if one-fourth, it shows four cycles, etc.

Remember that to get at least one cycle on the screen, the signal frequency must be an *exact* whole-number multiple of the sweep frequency, such as 1, 2, 3, or 4 times the sweep frequency. If there is even a slight difference in frequencies, the graph won't stand still on the screen. For instance, if the signal were 120 cycles and the sweep 61 cycles, the graph would slowly drift across the screen until the sweep frequency were re-adjusted to 60 cycles. If the two frequencies are farther from a whole-number ratio – 69 and 120 cycles, say – several superimposed images move quite rapidly across the CRT. This indicates how to adjust the sweep frequency vernier control – turn it in the direction which slows down the movement of the image. When it is moving very slowly, the final adjustment to stop it completely can be made with the sync vernier.

The scope has a built-in circuit to provide sawtooth horizontal sweep voltage, for use when we don't have or don't wish to use an external horizontal voltage. The sweep generator shown in Fig. 40-2 may be any one of a number of different types of sawtooth oscillator circuits, such as a gas-filled thyratron, a multivibrator, or an R-C blocking oscillator. It must operate over a wide frequency range, and be continuously variable over the entire range. To accomplish this in an oscillator operating, for example, from 3 to 30,000 cycles, it's necessary to divide the operation into a number of smaller ranges, any one of which can be selected by means of a switch. This switch usually adds or subtracts capacitance in the R-C frequency circuit of the oscillator. A variable resistance, or pot, makes it possible to select any particular frequency within the range.

In some newer commercial scopes designed primarily for TV servicing, two additional settings of the frequency-range switch provide pre-set sweep frequencies for convenience when working in the sync, video, and vertical- and horizontal-deflection circuits. One of these positions sets and syncs the sweep generator output at 30 cycles, the other at 7,875 cycles. These sweeps are exactly half the frequencies of the vertical and horizontal sync pulses, respectively, so it becomes a simple matter to look at either type of signal, or to switch back and forth at will. This saves re-setting the frequency-range switch, the frequency vernier and the sync vernier each time. A typical scope offering this feature is the RCA WO-56A, which will be discussed in detail later.

The output of the sweep generator is fed to the horizontal amplifier through a switch ganged to the sync selector switch. After amplification, it is applied to the horizontal plates of the CRT.

We're already familiar with how a synchronizing voltage "locks" the free-running sweep generator in exact step with the frequency of the signal voltage. Since we may wish to use different types of sync for various purposes, the sync selector switch is provided to give flexible operation.

The simplest form of sync is a separate external sync voltage, connected to the external binding post. The EXT position of the SYNC switch (Fig. 40-2) applies the external sync to the sync vernier pot. The arm of the pot makes it possible to take off a portion of the voltage and feed it to the sweep generator. External sync is used when the sync frequency required is different from 60 cps or the frequency of the input to the vertical amplifier.

With the SYNC switch at INT, we take off a portion of the signal going through the vertical amplifier and apply it to the vernier pot. In this case, the vertical signal is providing sync as well as a pattern on the scope.

The LINE position of the SYNC switch applies a 60-cycle sine wave to the input of the horizontal amplifier. This is usually used in connection with other test equipment, such as a sweep generator which is frequency modulated at the power-line frequency. The output of such a sweep generator varies at a sinusoidal instead of a linear rate, and it is therefore necessary to have a sinusoidal voltage for the horizontal sweep to obtain synchronization. When this equipment is used to obtain frequency response curves for alignment, the scope screen may show two graphs, partially overlapped. The PHASE control shown in Fig. 40-2 makes the two images coincide so that they appear as one.

Whatever type of synchronization is selected, it is important when adjusting the SYNC vernier to use the *minimum* setting which locks the pattern in a stationary position on the screen. *Too much sync voltage changes or distorts the output of the scope's internal sweep generator.*

SETTING UP AND USING THE SCOPE

40-3. To illustrate the operation of the scope, a typical oscilloscope will be used as an example – the RCA model WO-56A shown in Fig. 40-6.

This oscilloscope is specifically designed for TV servicing, and has a sine-wave response which is flat within 2 db down (20%) from 0 to 500-kc and within 6 db down (50%) from maximum response over the range 0 to 1 mc. The usable range can be considered as from d-c to 1 mc. It is not essentially a high-frequency instrument, but is completely adequate for practical television servicing, provided the technician bears in mind that non-sinusoidal waves of fairly high fun-

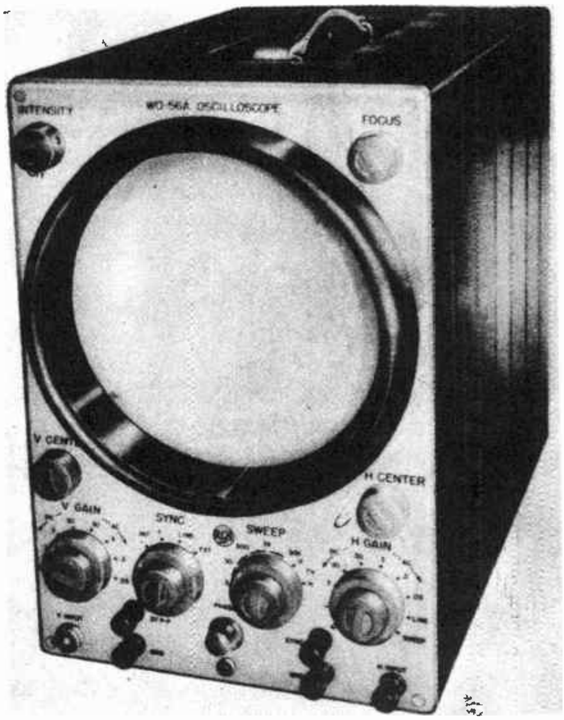

Fig. 40-6

damental frequencies are *not* accurately reproduced.

The WO-56A has a deflection sensitivity and amplifier gain such that a signal of 10.6 millivolts rms applied to the input of the vertical amplifier will produce a deflection of one inch on the scope screen. This represents a sine wave of 0.03 volt peak-to-peak. At the horizontal input, a signal of 21.2 millivolts rms is required for a one-inch deflection. This difference in sensitivity is not due to variation in the horizontal and vertical amplifiers, which are electrically identical, but to the fact that the electrons in the CRT beam travel faster past the horizontal plates than they do past the vertical plates. Therefore, the horizontal deflecting field acts on them for a shorter time and more horizontal signal strength is required to produce an equal amount of deflection.

Both the vertical and the horizontal amplifier of the WO-56A contain three push-pull stages which are direct coupled, providing flat frequency response down to and including d-c. This is particularly important in alignment, where good 30- or 60-cycle square-wave response is the most important requirement. The d-c amplifier stages give accurate square-wave reproduction up to about 100 kc, which is more than sufficient for viewing blanking and sync pulses and gives good results on video and composite waveshapes. In theory and for accurate reproduction of video and composite waveshapes, a special high-frequency scope, like the RCA WO-79A, would be required, giving essentially flat response to at least 2 mc. In practice, the WO-56A or any similar scope will show the blanking pedestals and sync pulses with enough accuracy for most purposes, and a little time spent looking at waveforms in the circuits of a receiver in good operating condition will show you what these waveforms look like *on the particular scope you're using.* This gives a basis of comparison when troubleshooting other sets.

The sweep generator provides a range of frequencies from 3 to 30,000 cycles, with provision for a sinusoidal power-line sweep for alignment. The SWEEP SELECTOR switch includes two positions marked TV/V and TV/H, which automatically set the sweep frequency to 30 and 7,875 cycles, respectively, for viewing vertical or horizontal signals.

When the V or H GAIN SELECTOR is set on the d-c range, the input signal is coupled directly to the grids of the first stage, passing only through the applicable attenuation resistors. When these selector switches are on the a-c range, however, a blocking capacitor is inserted in the path of the input signal. This makes it possible to block d-c and amplify only the a-c component.

Probes and Test Leads. – The WO-56A comes supplied with two input cables for the vertical amplifier. One of these shielded cables is terminated in a simple probe, called the Direct Probe, while the other is terminated in a special low-capacitance network and is called the Low-Capacitance Probe. With neither cable connected, the input resistance and capacitance of the vertical amplifier is 1 megohm, shunted by 30 mmf, when the full signal voltage is fed to the amplifier. On the attenuated ranges, 1/10, 1/100 or

1/1,000 of the signal is tapped off. With the Direct Probe connected to the vertical input terminal, the input resistance is 1 megohm, shunted by 75 mmf. The additional capacitance is the distributed capacitance of the shielded cable. Neither input resistance is very high, and if the scope is connected to a high-impedance point in a receiver, a loading effect which may range from mild to serious will occur. In other words, the relatively low resistance to ground of the scope input has a shunting effect on the circuit impedance, altering its value and changing the normal current distribution and operating conditions in the circuit being tested. The result, of course, is a false impression of circuit conditions.

In addition, if high frequencies or high-frequency harmonics in the input signal are present, the shunt capacitances of the shielded cable and the input terminals attenuate the higher frequencies. As shown in Fig. 40-2, each portion of the input voltage divider is shunted with a capacitor to help overcome this effect. The time constant for each RC section is made the same by having smaller capacitances across the larger resistances that are in the voltage divider. This makes the division of voltages the same over the entire band of frequencies passed by the amplifier. The voltage divider is necessary to prevent overloading the amplifier.

To reduce the loading effect of the scope on the circuit under test, we could add a high resistance in series with the input cable, but this would ruin the effect of the voltage-divider capacitors and the high-frequency response would drop off. Sometimes this doesn't matter. If it does, however, we can add a small capacitor, shunted across the series resistor (which is usually called an *isolating* resistor). The capacitor value is critical. It must be such that the time constant of the isolating resistor and this capacitor is the same as the time constant of all the other parallel R-C combinations.

An isolating resistor-capacitor combination like this is often built into a probe. This is the case with the Low-Capacitance Probe supplied with the WO-56A. The actual circuit is shown in Fig. 40-7.

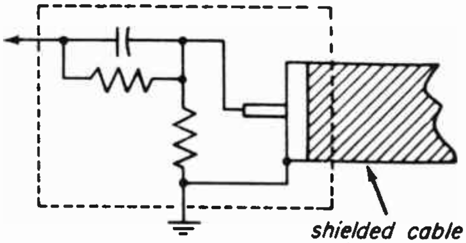

Fig. 40-7

The only purpose of shielding the leads on most scopes is to reduce the stray pickup when working on radio or TV receivers. If the cable were unshielded, magnetic fields in some stages could induce currents in the nearby scope lead which would cause a field around the lead. This field, in turn, could induce currents in the wiring of any earlier stage near which the scope cable passed. The result would be feedback causing regeneration, or even oscillation, of the amplifier. This is particularly likely in the picture i-f amplifier of a TV receiver.

To avoid such effects, the scope input cables are almost always shielded. Occasionally, the capacitance of the cable is sufficient to cause detuning of the circuit under test. When this happens, try using an isolating probe, or attach a 1-megohm resistor to the clip at the end of the scope cable. You can bend the other lead of the resistor in the shape of a hook and hang this over the point of connection to the circuit.

The isolating resistor will drop the high-frequency response; this can be avoided by using ordinary test leads connected to the vertical input instead of the usual cable. Keep the two leads well separated, to avoid capacitance between them, and don't let either one hang too close to the receiver wiring. This will usually solve the detuning problem.

Scope Controls. – The functions of all the controls and terminals on the panel of the WO-56A are given in condensed form on the following pages, which are reproduced from the instruction book for the instrument. The small scope-face dia-

Functions of Controls and Terminals

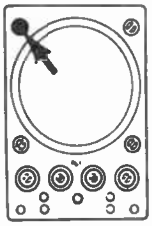

INTENSITY control—Has two functions; applies power to the instrument when turned clockwise from "OFF" position, and controls the intensity of the spot on the CRT screen.

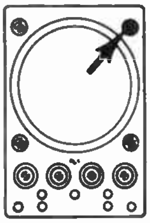

FOCUS control — Adjusts sharpness of pattern on CRT screen. Normally requires adjustment when setting of INTENSITY control has been changed.

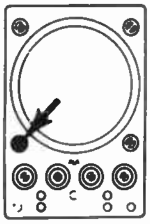

V CENTERING control — Adjusts vertical position of trace.

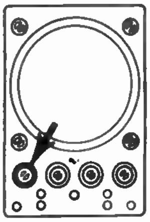

V GAIN selector—Controls degree of attenuation of input voltage to vertical amplifier. This control is marked for both ac and dc voltages. To determine amplitude of signal voltage when vertical amplifier has been calibrated, multiply V GAIN selector setting by total deflection in inches. When Direct Probe and Cable WG-218 is used, attenuation is as indicated below for each selector position. When Low-Capacitance Probe WG-216A is used, attenuation is ten times as great as indicated below.

Position ".03" — Zero attenuation. Signal voltage attenuated 1 to 1.

Position ".3" — Signal voltage attenuated 10 to 1.

Position "3" — Signal voltage attenuated 100 to 1.

Position "30" — Signal voltage attenuated 1000 to 1.

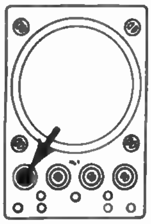

V GAIN vernier—Permits continuous adjustment of vertical-amplifier gain. Use with V GAIN selector to adjust trace height to desired value. See "Operation" section for calibration procedure.

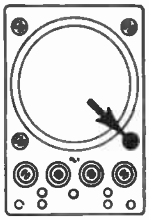

H CENTERING control — Adjusts horizontal position of trace.

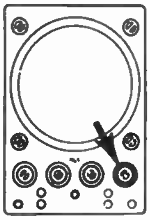

H GAIN selector—Has three functions, as indicated below:

(1) Controls degree of attenuation of input voltage to horizontal amplifier. This control is marked for both ac and dc voltages. Attenuation is as indicated below for each selector position.

Position ".03" — Zero attenuation. Signal voltage attenuated 1 to 1.

Position ".3" — Signal voltage attenuated 10 to 1.

Position "3" — Signal voltage attenuated 100 to 1.

Position "30" — Signal voltage attenuated 1000 to 1.

(2) When an internal linear sweep is desired, set this control to "SWEEP" position.

Position "SWEEP" — Applies plate voltage to sweep oscillator tube, and couples output of sweep oscillator to input of horizontal amplifier.

(3) When sinusoidal sweep of power-line frequency is desired, set this control to "LINE" position.

Position "LINE"—Applies sinusoidal voltage at power-line frequency to horizontal-amplifier input.

NOTE: The outer knob of each of the four dual controls is the selector control; the inner knob is the vernier control.

H GAIN vernier—Permits continuous adjustment of horizontal-amplifier gain. Use with H GAIN selector to adjust horizontal trace to desired width.

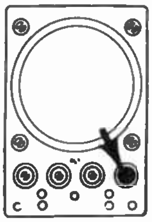

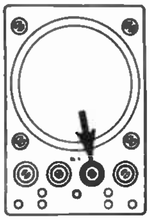

SWEEP selector—Selects frequency band of sweep oscillator. Positions "TV/V" and "TV/H" give preset sweep frequencies of 30 cps and 7875 cps, respectively, for viewing vertical- and horizontal-deflection-circuit waveshapes, sync-separator waveshapes. and composite television signals.

SWEEP vernier—Provides continuous control of sweep frequency over bands selected by SWEEP selector.

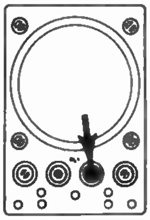

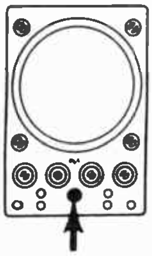

PHASE control—Controls the phase of the sinusoidal sweep voltage fed to the horizontal amplifier when the H GAIN selector is set at "LINE" position, and controls the phase of the line-frequency voltage used to synchronize the sweep oscillator when the SYNC selector is at "LINE" position and the H GAIN selector is at "SWEEP" position.

SYNC selector—Selects sync voltages for sweep oscillator.

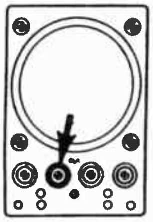

Position "INT—"—Selects synchronizing voltage from vertical amplifier. Sweep-trace flyback starts during negative-going excursion of voltage applied to vertical amplifier.

Position "INT+"—Selects synchronizing voltage from vertical amplifier. Trace flyback starts during positive-going excursion of voltage applied to vertical amplifier.

Position "LINE"—Selects synchronizing voltage from power supply. Sweep oscillator synchronized with power-line frequency. When the SYNC selector is in "LINE" position and the H GAIN selector in "SWEEP" position, the PHASE control can be used to adjust the phase of the sweep voltage with respect to the input voltage.

Position "EXT" — Feeds external sync voltage applied at SYNC terminal to sweep oscillator.

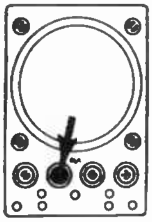

SYNC vernier—Controls amplitude of synchronizing voltage applied to grid of sweep oscillator. Adjust to minimum setting necessary to lock pattern in a stationary position on the CRT screen.

SYNC terminal — An external synchronizing voltage can be applied at this terminal.

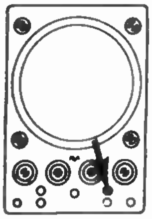

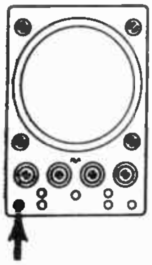

V INPUT terminal—The voltage to be applied to the vertical amplifier is introduced at this terminal through the Direct Probe and Cable WG-218. When the V GAIN selector is on its ac positions, the signal is applied to the vertical amplifier through a blocking capacitor; when the V GAIN selector is on its dc positions, the signal is applied directly to the vertical amplifier.

H INPUT terminal—The voltage to be applied to the horizontal amplifier is introduced at this terminal.

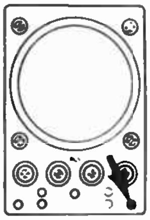

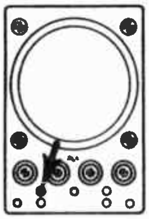

3V P-P terminal—Internal calibrating voltage is available at this terminal. See "Operation" section for calibration procedure.

GND terminals — Are directly connected to the chassis of the oscilloscope; serve as a common ground for the WO-56A and the chassis of the equipment under test or associated test instruments.

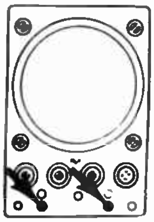

grams show the position of the controls; all the functions of each are covered.

Two items require further amplification.

The horizontal and vertical centering controls in this model do not operate in the manner described in connection with Fig. 40-2, since none of the deflection plates is at ground potential. Instead, each of the vertical deflection plates is directly connected to one of the push-pull plates of the vertical output stage and operated at + 275 volts. Since all the amplifier stages are direct-coupled, the output can be balanced – thus centering the beam between the two vertical plates – by balancing the cathode potentials of the second push-pull stage. Thus, a potentiometer connected as shown in the simplified diagram of Fig. 40-8 offers a means of centering the beam vertically. The horizontal deflection plates and the horizontal amplifier are treated in exactly the same manner.

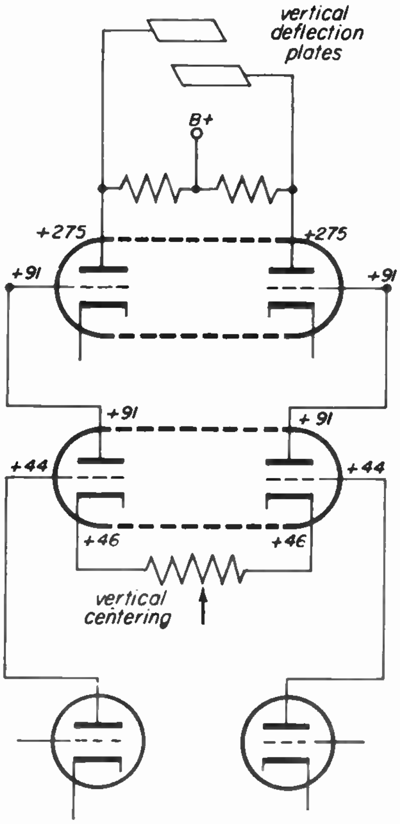

Fig. 40-8

The terminal marked 3V P-P provides a reliable, known value of voltage (3 volts peak-to-peak) for calibrating the vertical amplifier when we wish to make voltage measurements. The 3 volts is obtained from a voltage divider connected to the circuit which provides the line-frequency sweep. The exact calibrating method will be discussed later, in connection with measuring techniques.

Setting Up the Scope. – This is usually a very simple procedure. In the case of the WO-56A, all that's necessary is to connect the power cord to an outlet supplying 105 to 125 volts at 50 to 60 cycles. The ON–OFF switch is included on the INTENSITY control on this and most other scopes. Next, you'll normally set the intensity and focus and center the spot – we'll cover this in more detail later.

The scope, the receiver chassis on which you're working and any other test equipment should have a common ground. The ground lead of the scope is not always satisfactory in providing this. If the grounds are at slightly different potentials, feedback can occur through the power line from one unit to another, causing false response on the scope and complicating the job. For this reason, it's best to have a section of the test bench covered with a large sheet of copper or sheet iron. Be sure that all the units in use rest solidly on this and make good contact to it. This is especially important in alignment, but holds equally true whenever the scope is used. If the graph or waveform displayed on the scope changes with hand capacity every time you reach for the scope controls, the equipment is not properly grounded.

Type of Sync and Sweep. – Most of the time, when you're using the scope alone (that is, without a sweep generator), you will use the internal sweep oscillator of the scope and internal sync.

When an external horizontal sweep voltage is available, you can connect this source to the H INPUT terminal and use the H GAIN selector to feed the desired amount of signal to the horizontal amplifier. One application of this would be using a sweep generator which provided a special horizontal sweep voltage to make the alignment response linear. When you feed in an external signal to the H amplifier and use the H GAIN selector in position .03, .3, 3 or 30, the internal sweep oscillator is disabled and the SWEEP and SYNC controls are inoperative. You must use the H GAIN selector and vernier to spread the pattern horizontally on the screen.

When no external sweep voltage is available – which is the most common situation – set the H GAIN selector to SWEEP, which connects the output of the sweep oscillator to the H amplifier. Now you can use the SWEEP selector and vernier to adjust the frequency of the sawtooth voltage as required to make the pattern stand still on the CRT. Ordinarily, set the sweep frequency to half the frequency of the signal you wish to examine. This gives you one complete cycle and one incomplete cycle on the screen, as explained previously. In the WO-56A scope, the SWEEP selector also has positions marked TV/V and TV/H, which give pre-set sweep frequencies for viewing the vertical or horizontal sync and blanking pulses, respectively. If you're watching a composite waveform, for example, you can simply switch back and forth to examine the vertical or horizontal pulses. If your scope doesn't have this feature, set the sweep frequency to 30 cycles when you wish to see the vertical pulses and reset the frequency to 7,875 cycles to see the horizontal pulses.

When the job requires a sinusoidal sweep rather than a linear sawtooth, set the H GAIN selector to the LINE position, which applies a voltage taken from the power transformer to the input of the horizontal amplifier. The SYNC and SWEEP selectors are inoperative. This is used chiefly in alignment, if your sweep generator provides a signal which is frequency-modulated at the line frequency. No external connections between the sweep generator and the scope are required in this case, provided there is a phasing control on the scope.

The sync setting depends to some extent on the type of sweep you're using. When using an external sweep voltage connected directly to the H INPUT terminal, the SYNC selector on the scope is disabled. Synchronization is accomplished in the unit supplying the sweep signal.

With the internal sweep oscillator in use, you'll usually want internal synchronization. To accomplish this, the SYNC selector is set at the INT position, which takes a small voltage from the vertical amplifier signal channel and feeds it to the sweep oscillator. In other words, the signal going through the vertical amplifier is made to sync itself. The WO-56A has two such positions, INT– and INT +. The difference is explained in the chart in the section on scope controls. For most servicing applications, this refinement will not be employed, and it makes no difference which of these two positions is used.

Occasionally, you'll wish to use an external sync voltage. Some sweep generators supply such a voltage to insure that the sweep generator and scope remain exactly in step during alignment. When using external sync, connect the sync source to the SYNC terminal on the scope and set the SYNC selector to the EXT position. The internal sweep oscillator is used, but is now synchronized by the applied signal.

The remaining position of the SYNC selector is LINE, which takes a small voltage from the power supply to synchronize the sawtooth oscillator when the H GAIN selector is in the SWEEP position. Notice that this SYNC control does not have to be set to LINE when the H GAIN selector is on LINE because in that case sync is automatic and the SYNC selector is disabled. When using the power-line sync on the sawtooth sweep voltage (H GAIN selector on SWEEP, as above), the sweep phasing can be adjusted with the PHASE control, to make the graph on the CRT begin at any desired part of the cycle. The PHASE control is also used when the H GAIN selector is on LINE, to make the double traces sometimes presented during alignment coincide and appear as a single trace.

The SYNC vernier is used to make the pattern stand still on the CRT. This control, which is a potentiometer, sets the amplitude of the sync signal fed to the sweep oscillator. When the internal sweep is not used, the SYNC vernier is inoperative.

Basic Operating Procedure. – Now that we've covered the important details of the SYNC and SWEEP controls, we're ready to consider the practical procedure of scope operation.

Perhaps half a minute after the scope is turned on, the spot will appear on the screen. (Occasionally it may not, due to the controls having been left in the wrong position, but it can be brought back with the centering controls. You'll get a horizontal line, instead of a spot, if the H GAIN selector is at either LINE or SWEEP.) As soon as the spot appears, adjust the INTENSITY control until the spot is relatively bright, but not brilliant. *This is necessary*, because no signal has been applied yet, and if the spot stands still while its intensity is high, the result will be a burn in the coating of the CRT, leaving a permanent dark spot. In addition, the spot need not be flaringly bright to produce a readable trace; on complex waveforms, a well-focused, medium-bright spot often gives better detail.

With the spot standing still and the intensity low, adjust the FOCUS control until the spot is as small, round, and sharp as you can make it. The spot need not be still for focusing – you can adjust for a narrow line just as easily. The important thing is to get in the habit of adjusting intensity and focus together, since there is interaction between the two. Whenever the INTENSITY control setting is changed, it is usually necessary to re-focus.

Centering the spot is next, and the method used depends upon whether or not you'll *need* accurate centering. If you're going to look at waveforms you can center by eye; simply turn the H CENTER and V CENTER controls until the spot is approximately at the middle of the CRT face. For a-c measurement with the scope, however, set the spot exactly at the intersection of the two centerlines on the graph screen.

On some scopes, all controls are labelled X-AXIS and Y-AXIS instead of HORIZONTAL and VERTICAL. Some DuMont scopes, for example, use this system. This is derived from the conventional method of laying out graphs with the X-values plotted horizontally and the Y-values vertically. Remember:

X = Horizontal
Y = Vertical

Once the spot is centered, the preliminary adjustments are complete and the scope is ready for use. Assume that we wish to examine the output waveform of an audio oscillator which is operating at 400 cycles. Since there is no external horizontal sweep voltage, the internal sweep oscillator of the scope must be operated either at 400 cycles or at some submultiple (½, ¼, etc.). By setting it to 400 cycles, we'll get one cycle on the screen, but not a complete one, so we'll use a frequency of 200 cycles for the sawtooth voltage, which gives us one complete cycle and most of another. No external sync voltage is available, so we'll use internal sync. The procedure is as follows:

1. Turn on the sweep by turning the H GAIN selector to SWEEP. A horizontal line will appear on the screen, the length of which can be adjusted by varying the H GAIN vernier. For normal purposes, adjust the length to occupy 2/3 to 3/4 of the total width of the screen.

2. Turn the SWEEP selector to the position between 30 and 300. This puts the sawtooth sweep frequency in the proper range and we can adjust it to exactly 200 cycles *after* we've applied the vertical input signal.

3. Set the SYNC selector to either INT– or INT+. It's a good idea to get in the habit of turning the SYNC vernier down (fully counterclockwise) at this point, to avoid the possibility of using too much sync voltage.

4. Using the scope cable and either the Direct Probe or the Low-Capacitance Probe, connect the output of the audio oscillator to the V INPUT terminal of the scope. Until now, there has been only a

horizontal line on the CRT, since no vertical voltage was applied to sweep the spot up and down.

5. Now there is vertical deflection, but it may be great or small depending on the strength of the signal supplied to the V INPUT terminal and the position of the V GAIN controls. Turn the V GAIN selector through its A-C range (there's no d-c in this signal) until the pattern on the CRT is about the size you wish. Adjust it to final size with the V GAIN vernier.

6. The pattern probably is drifting across the screen, and there may be several superimposed images, so it is necessary to adjust the sawtooth sweep voltage to exactly 200 cycles. This is accomplished by turning the SWEEP vernier to make the pattern slow down to a very slow drift. At the same time, the various images will resolve into one. You may be able to make the pattern stop for a moment with the SWEEP vernier, but it will usually begin to drift again almost immediately. Don't worry about this – an approximate setting is close enough.

7. Lock the scope pattern in place by turning up the SYNC vernier until the presentation on the CRT becomes stationary. *Don't use too much sync.* If this control is turned up too far, the output of the internal sweep oscillator may be distorted, resulting in non-linearity or a false pattern on the scope. The natural reaction is to blame any poor pattern on the circuit you're testing, but in this case you'd be wrong – so, use a minimum amount of sync.

After the scope pattern is locked in place, the screen of the scope will show a little less than two complete cycles of the 400-cycle audio oscillator output. It is not essential that steps 2, 3, and 4 be performed in exactly the same order each time – for instance, if we connected a signal of unknown frequency to the V INPUT, we might have to try the SWEEP selector on all ranges to determine which one gave us the least number of superimposed images on the CRT. This would be the correct range, but we couldn't locate it until the vertical input signal were applied, so step No. 2 would have to follow step No. 4 in this instance.

Now we've been through the entire procedure. Here, for convenience, is a simplified procedure, which can be used to set up the scope for examination of any waveform. Fig. 40-9 is a visual representation, showing what is seen on the CRT during each step. The numbers on the drawing correspond to the numbers in the procedure below:

1. Turn on, set intensity and focus the spot.
2. Center the spot.
3. Apply horizontal sweep voltage (internal or external) and adjust width.
4. Apply vertical sweep voltage (test signal) and adjust height.
5. Adjust horizontal sweep frequency for minimum drift (which also gives clearest pattern).
6. Apply sync voltage (internal or external) and adjust to lock pattern. Make any final adjustment of height and width.

Cautions. – The most important thing to remember in working with the scope, particularly on TV receivers, is to *beware of high voltages*. They are always potentially dangerous. The voltages within the scope may be around 2,000 volts, but you

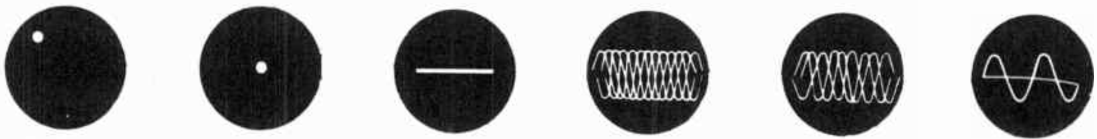

1-Set intensity and focus (no sweep)

2-Center the spot (no sweep)

3-Apply H sweep voltage and set width

4-Apply V sweep voltage and set height

5-Adjust sweep frequency to slow down drift and resolve pattern

6-Apply and adjust sync to lock lock pattern make final height and width adjustments

Fig. 40-9

won't have to worry about these unless you have to open the unit for service or alignment, which should not often be necessary.

In connecting the clip of the scope probe in various TV circuits, however, you will encounter high voltages which may in places be thousands of volts. You should know where the high-voltage points are located in the receiver you're working on – but never forget that in a defective receiver high potentials may appear at other points as well.

It isn't always practicable to turn off the power before you connect test leads to high-voltage points – though this should be done when possible – but at least make sure the scope ground clip is firmly attached to a good chassis ground. *Never* connect it to a point of high potential. If you're working on a metal-topped bench which provides a common ground, don't lean on the metal or against the test equipment or racks. The floor should be dry and insulated.

Be careful that the probe clips do not touch other wiring, and always discharge filter capacitors by short-circuiting them before connecting test leads.

In some scopes, the H and V terminals shown on Fig. 40-2 are located on the back of the instrument and are uncovered. These terminals connect directly to the deflection plates and carry high voltages. Don't attempt to shift the scope's position, or pick it up, while the power is on – it's easy to get a hand on these terminals accidentally.

HOW TO CALIBRATE THE VERTICAL AMPLIFIER

40-4. This is an important procedure, and one used a great deal, since the vertical amplifier *must be calibrated* before the scope can be used as an a-c voltmeter. This does not mean that the unit must be calibrated only when you first get it, but *each time* it is used for a-c measurement. The reason for this is that this type of calibration involves setting the V GAIN *vernier* to a certain critical position. Therefore, if there's any possibility that the V GAIN vernier has been moved since the last time a measurement was made, it's necessary to re-calibrate. Of course, you can make a series of measurements of different voltages after calibrating only once, but if the scope is used for another purpose between times, you'll have to re-calibrate it. Otherwise, you're running the risk of serious error in measuring. The procedure is quick and simple, so it's safest to run through it when in doubt.

The purpose of calibrating the vertical amplifier is to adjust the V GAIN vernier to a point where a *known* value of a-c voltage causes a definite amount of vertical deflection, peak-to-peak. Once the vernier is set (and not touched again), we can apply an *unknown* voltage and determine its peak-to-peak value from the amount of deflection it causes. For example, if 3 volts cause one inch of deflection, two inches must be caused by 6 volts, three inches by 9 volts, etc. On a 5- or 7-inch CRT, this wouldn't permit measuring much of a range of voltages, if it weren't for the *step attenuator* (the V GAIN selector), which enables us to divide the input voltage by 10, 100 or 1,000, giving a much wider selection of measurable voltages. If we perform the initial calibration on a middle position of the step attenuator, we can measure both larger and smaller voltages.

We'll give the exact procedure for calibrating the scope we're using as an example in this lesson, the RCA WO-56A. For any other scope, you'll follow the same sequence of operations – the major differences being that the step attenuator will be marked differently and the calibrating voltage may not be supplied by the scope itself. *It is very important that the calibrating voltage be accurately known.* Some scopes have terminals on the panel providing 6.3 volts for the filaments of external tubes or for other uses. This voltage is *almost always unreliable* and should not be used for calibration of the vertical amplifier unless the manufacturer specifically states that it is regulated for that purpose. In most scopes, this 6.3 volts comes from a winding on the power supply transformer and is unregulated.

One more item of importance – in measuring peak-to-peak voltages, we're only interested in how far up and down the waveform moves. The total distance between the topmost and bottommost points is the vertical deflection, and we can judge this most easily if there is only a straight vertical line between them. Therefore, we can turn off the horizontal sweep, which is easily done by switching the H GAIN selector to a position that would ordinarily apply an external voltage. As long as we don't connect an external voltage, however, there is no horizontal deflection. Of course, it's entirely possible to measure the amplitude of a waveform (centerline to positive peak, centerline to negative peak, and add the two values), but this involves syncing the waveform to make it stand still, which is an unnecessary waste of time.

The graph screen should be in place on the CRT and the spot centered vertically so that it lies exactly on the center horizontal line of the graph. Keep the intensity *low* throughout calibration and measurement, to avoid burning the CRT.

Here is the calibration procedure for the WO-56A:

1. Turn on and warm up the scope.
2. Set the H GAIN selector on any number, but *not* on SWEEP or LINE.
3. Center the spot vertically, exactly on the centerline.
4. Connect the Direct Probe (which doesn't attenuate the signals) and cable to the V INPUT terminal. Connect the ground cable to the GND terminal.
5. Connect the probe tip to the 3V P-P calibrating terminal.
6. Turn the V GAIN selector to the position marked 3 on the A-C range (this blocks any d-c component of the voltage; thus only the a-c will be measured).
7. Adjust the V GAIN vernier until the vertical deflection of the CRT trace is exactly one inch. The vertical line on the screen should extend 5 small divisions above the centerline and 5 below if the spot is correctly centered; its total length should be 10 small divisions on the graph screen. (Nearly all scope screens have 10 divisions to the inch.)
8. *Do not touch the V GAIN vernier again while you're making voltage measurements.* If you strike it accidentally, re-calibrate.
9. Disconnect the probe from the 3V P-P terminal.

This completes the calibration and the instrument is ready to use for accurate voltage measurement. This particular scope, however, is specially arranged to make measurement easy, which is the reason for the unusual numbering of the V and H GAIN selectors. On other scopes, not having a similar arrangement, it's preferable to calibrate for a convenient number of *volts per division* on the graph screen. Here's an easy way to do it:

1. After setting up the scope and centering the spot, set the step attenuator on the position which gives next-to-highest attenuation of the input signal (on *most* scopes, this will be the next-to-lowest number on the "gain" selector).
2. Connect the accurately known input voltage to the vertical input terminals. You must know or calculate the peak-to-peak value. If it's a sine wave, multiply the rms value by 2.82, or the peak value by 2. Try to use a calibrating voltage which is not too large; otherwise you may have to use a different position of the step attenuator and be unable to measure very small voltages. A calibrating voltage of 15 volts, peak-to-peak, or less is preferable.
3. Adjust the length of the trace, using the vertical gain *vernier,* until it covers a number of graph divisions which is some convenient multiple or submultiple of the peak-to-peak calibrating voltage. For example, if the input voltage is known to be 10 volts, peak-to-peak, you might adjust the V GAIN vernier until the trace occupies 10 small divisions on the graph screen (5 divisions above the centerline, 5 below), in which case you have calibrated the scope at *1 volt per division.* Or you might make it occupy 20 divisions, which would be 0.5 volt per division. Always divide volts by number of divisions. Odd values of calibration voltage can be made to come out evenly by using a multiplier of 10 – 3.8 volts peak-to-

peak can be adjusted to cover 38 divisions, for instance, giving a calibration of 0.1 volt per division.

4. Remove the calibrating voltage and *do not touch the V GAIN vernier again.*

A-c Voltage Measurement. – Once the calibration process is completed, there is little more to a-c measurement than connecting the voltage to be measured, measuring the deflection it produces and calculating the voltage value.

When the signal to be measured is connected to the vertical amplifier, the spot may apparently remain unchanged at the center of the screen or a vertical line which runs off the CRT may be produced. On the other hand, if the signal is near the value of the calibrating voltage, you may get a readable deflection right away.

When the deflection is too small (vertical line too short), it's hard to read accurately. If the deflection is less than about 4 small screen-divisions on a 5-inch scope or about 6 small divisions on a 7-inch scope, switch the step attenuator (V GAIN selector) to a different range.

You can tell whether the signal voltage is larger or smaller than the calibrating voltage as soon as the signal is connected to the vertical amplifier.

If the signal is larger, you'll either get a readable deflection or the line will go off the screen. If the latter happens, you must turn the step attenuator to the next position giving more attenuation of the input signal (on most scopes, this is the next *lower* number on the "gain" selector).

If the signal is smaller, you may get a readable deflection, but, more likely, the spot will appear unchanged. In this case, the step attenuator must be switched toward *less* attenuation (next higher number on the "gain" selector, usually). It may be necessary to switch this control more than one step to get a useful deflection.

During this procedure, you should not have disturbed the setting of the gain vernier.

Now, we have a readable deflection on the screen, we know how many volts per division were set during calibration, and we know the amount by which we had to change the step attenuator to obtain deflection. Remember, this control is ordinarily arranged in steps of 10x, so each step toward *more* attenuation *multiplies* the result by 10, each step toward *less* attenuation *divides* by 10. Two steps, of course, multiply or divide by 100.

Here's how to calculate the unknown voltage after a readable deflection is obtained:

1. Count the number of small divisions of deflection.
2. Multiply by the *volts per division* determined during calibration.
3. If the setting of the step attenuator had to be changed to get readable deflection, multiply or divide the result from (2) by 10, if changed one step, or 100, if changed two steps.

Let's run through a couple of examples. Assume, on a scope with the vertical gain selector marked 1, 10, 100, and 1,000, that we have calibrated the vertical amplifier to 0.1 volt per division, with the gain control set on 10. When we connect the signal to be measured, the deflection goes off the screen and we move the gain control to 1 to bring it back. The vertical line on the screen now measures 38 divisions. As in step (2), above, we multiply this by the volts per division:

$$38 \times 0.1 = 3.8$$

If the gain control (step attenuator) had not been changed, this result would be the value of the signal voltage, but we added *more* attenuation by turning the gain control to 1, so we must *multiply* by 10.

$$3.8 \times 10 = 38 \text{ volts}$$

The value of the signal voltage is thus 38 volts, peak-to-peak. To find the rms value, multiply by .354 if it is a sine wave.

As a second example, assume we're using the same scope, again calibrated to 0.1 volt per division, with the gain control set on 10. We connect a different signal voltage. and this time the spot doesn't appear to change; there is no deflection. We turn the gain control to 100, but the spot still doesn't change, so we move the control to 1,000 and get a deflection of 38 divisions. This must first be multiplied by the volts per division:

$$38 \times 0.1 = 3.8$$

This time we turned the gain control toward *less* attenuation, so we must *divide* –

and since we moved the control two steps, we must divide by 100.

3.8/100 = 0.038 volt

The value of the signal voltage in this case is 0.038 volt peak-to-peak. Notice that in both cases we had the same calibration and the same deflection. The arrangement of the step attenuator made it possible to measure these two voltages which have a ratio of 1,000 to 1. Actually, the range is much greater than this, because we can accurately read a smaller deflection produced by a weaker voltage and there is room for more deflection caused by a stronger voltage. In addition, we can calibrate for more or less voltage per division and on different positions of the step attenuator, which gives great flexibility.

We've already explained how to calibrate the RCA WO-56A scope, and mentioned that this model is arranged for easy a-c voltage measurement. After the instrument is calibrated, the unknown signal is applied through the Direct Probe and ground cable and the V GAIN selector is turned, if necessary, to obtain a readable deflection. On the WO-56A, this deflection should be read in *inches* (count the small divisions and divide by 10, since there are 10 to the inch). Then multiply the deflection in inches by the number at which the V GAIN selector is set. The result is the peak-to-peak value of the unknown voltage.

The Low-Capacitance Probe can be used for measurement of voltages which are not too small. This probe gives an additional attenuation of 10x, so the results from the calculations described above must be multiplied by 10 to obtain the correct reading.

Remember that in connection with a-c measurement we can measure the peak-to-peak value of *any* signal which has a frequency within the flat response range of the particular scope we're using. *It does not have to be a sine wave.*

Often, in the course of signal tracing, we must determine the peak-to-peak voltage of a waveform which we have on the scope screen. In such a case, it's not necessary to turn off the horizontal sweep. Merely disconnect the vertical amplifier probe from the receiver circuit, apply the calibrating voltage and set the gain vernier, then connect the probe to the same point in the receiver. The signal is in sync on the scope, since we haven't changed the controls, so we use the gain *selector* to set the height of the waveform and calculate the voltage value. This is especially useful in checking sync signal amplitude and video gain.

SIGNAL TRACING THE TV RECEIVER WITH THE SCOPE

40-5. The question of *where* we can use the scope has been partly answered by the discussion of the scope's limitations. Since the response of the scope falls off at the higher frequencies, causing distortion of the waveshapes as seen on the screen, there is no point in attempting to signal trace the r-f or i-f sections of a TV set. Of course, we could use a probe to rectify the incoming signals, but the waveform would be constantly changing and we could not compare it with a standard, which is the whole point of signal tracing. The scope might be useful to find a discontinuity or break in the signal chain, but an a-c meter will serve as well for this.

The scope has a very important use in the r-f and i-f circuits, however. When used with sweep and marker generators for checking frequency—response curves and other troubleshooting, it is extremely valuable. This alignment equipment and its use is covered in Lesson 41.

We can use the scope to good advantage in the video, sync, and deflection circuits. Since the average scope has a usable range only up to 1 mc or less, it would appear at first glance that we couldn't do much in the video circuits, where frequencies run as high as 4 mc. What we're really interested in seeing, however, are the sync and blanking and their relationship to the video signal, and these fundamental frequencies are relatively low (although the harmonics go quite high). Therefore, we get fair reproduction of the sync pulses and the blanking pedestals, even though the video signal appears blurred. Tracing this composite TV waveform through the video stages is a very useful check for locating faults in the video section.

The scope makes it possible to run down the cause of loss of sync and other faults of the sync and deflection circuits quickly and easily. Here, again, the fundamental frequencies of the vertical and horizontal components are low: 60 cycles and 15,750 cycles, respectively. Therefore, we can begin at the input to the sync separator and check the waveforms all the way through the sync and deflection circuits, comparing what we see on the scope either with the manufacturer's published photos of the normal waveforms for that receiver or with the waveforms from another receiver of the same model which is operating properly. The receiver under test must, of course, be turned on and tuned to a television signal.

Receivers of different makes – and even different models of the same make – will give different waveforms, depending on the basic types of circuits used. This is no problem as long as we have the service data or a set of waveforms drawn from a good receiver as a basis of comparison. In any event, the signal-tracing procedure doesn't change.

Normally, the probe or probes supplied with the scope or available as accessories may be used "as is", to connect into the circuit under test. Remember, however, that in the deflection circuits of a TV receiver very high pulse voltages are encountered, in some instances as high as 20,000 volts. Even though we won't ordinarily have occasion to view these highest pulses, we will wish to check points where the voltages are quite high. For example, in the RCA Model 6T84, the peak-to-peak voltage at the plate of the horizontal output tube is approximately 6,000 volts and at the cathode of the damper it is about 3,000 volts.

The scope, however, has a definite maximum input voltage, specified in the manufacturer's instructions for the instrument. The d-c blocking capacitor at the input to the vertical amplifier is commonly a 400-volt unit, so this value of d-c should not be exceeded. If it should be necessary to connect the scope to a point of higher potential than this, use another capacitor, of higher rating, *in series with the probe.* Maximum permissible a-c input may depend upon either or both of two factors, according to the circuits used in the scope. Voltages above a certain value will cause off-the-screen deflection due to the gain of the vertical amplifier, even with the V GAIN control at minimum – and in some cases, voltages above a certain value may damage the amplifier circuits.

The RCA WO-56A oscilloscope has a maximum a-c input voltage rating of 600 volts rms, with 400 volts d-c also present. This is on the A-C range. The value of 600 volts rms is equivalent to 1,680 volts P-P, so no signal greater than this should be applied to the vertical amplifier without first dropping the value by some means.

The easiest and most practical method of accomplishing this is to connect a voltage divider between the high-voltage point and ground. The simplest type to use, if available, is the low-capacitance probe provided with many scopes, which attenuates the signal by a factor of 10. Thus, the WO-56A can be used with the RCA Low-Capacitance Probe on voltages up to 16,800 volts P-P. An additional advantage of using this probe is that it is frequency compensated, and does not cause much distortion of the waveform due to the loss of the higher frequencies, as a voltage divider composed of pure resistance will do.

If no attenuating probe is available, or if the pulse voltage is so high that an external voltage divider must be used, most manufacturers recommend the use of a capacitance-type divider. Make certain that the working voltage rating of each capacitor used is sufficiently high to withstand the drop that will appear across it. If necessary, 3 or 4 capacitors can be used to reduce the drop across each unit. The capacitance values may all be the same, or they may be in any desired ratio.

Signal Tracing the Video Amplifier. – The procedure for signal tracing is very simple. The most important factor is the technician's ability to interpret the waveforms displayed on the scope. This ability is largely a matter

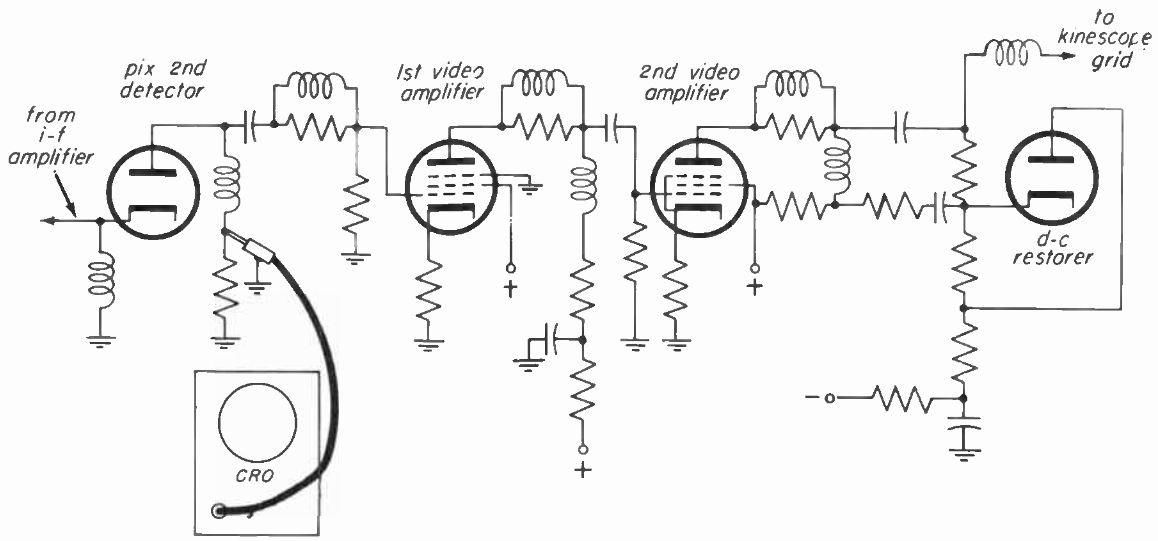

Fig. 40-10

of practice. Unfortunately, there is no substitute for such practice, since the waveforms seen at a given point in a receiver depend not only upon the receiver and its operating condition, but also upon the scope and probe used. For this reason, you should trace through several receivers which are operating properly, to accustom yourself to the appearance of the correct waveforms *as reproduced on your scope.*

To illustrate the procedure, Fig. 40-10 shows the stages of a typical video amplifier.

The procedure, step-by-step, is as follows:

1. Turn on and warm up the scope and the receiver. Tune the receiver to a signal.
2. Set up the scope for operation, using internal sweep and sync. Assuming the horizontal sync pulse is to be viewed first, set the SWEEP selector to the range which includes 7,875 cycles (on a scope having preset sweep frequencies, such as the WO-56A, set to TV/H).
3. Connect the ground clip of the scope to the chassis of the receiver, preferably at a point in the video circuits. Attach the input cable to the V INPUT terminal of the scope and connect the probe to the plate end of the diode load resistor in the picture 2nd detector, as shown in Fig. 40-10. If the scope has a low-capacitance type of probe, this should be used.
4. Set the V GAIN selector and vernier for a pattern of readable height. On a d-c scope, the gain selector should be in an A-C position.
5. Adjust the SWEEP vernier for the clearest pattern with the slowest drift.
6. Turn up the SYNC vernier from minimum until the pattern stands still on the screen. *Do not use any more sync than necessary,* or the pattern may become distorted.

This part of the procedure gives you the horizontal sync pulse, which should appear similar to the photograph shown at *a* of Fig. 40-11. To obtain the vertical sync pulse, the following steps are necessary.

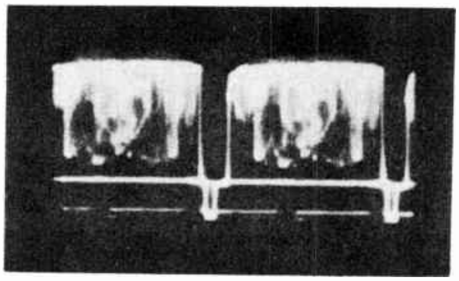

Fig. 40-11 (a)

7. Switch the SWEEP selector to the range which includes 30 cycles. (On a scope with preset frequencies, simply switch to TV/V; no other adjustment is required).
8. Adjust the SWEEP vernier for the clearest pattern and the slowest drift.
9. Reset the SYNC vernier as necessary

to hold the pattern stationary without distortion.

This places the vertical sync pulse on the scope screen, where it should look like the photo at *b* of Fig. 40-11.

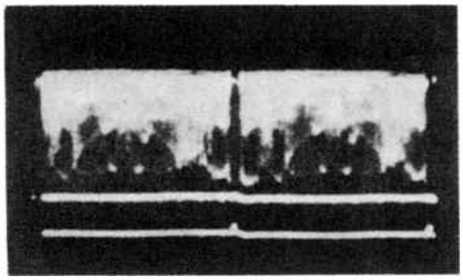

Fig. 40-11 (b)

10. Trace the waveform through the video amplifier by placing the probe at the grid, then the plate, of each stage and checking the horizontal sync pulses at each point. (Unless your scope has preset sweep frequencies, it's quicker to run through these points once to check the horizontal pulse, then a second time, if necessary, to check the vertical.) The last point to check is at the signal grid of the picture tube.

In trouble-shooting, we're looking for any abnormality or change of the waveform, which usually shows up best in the horizontal sync pulses. At the picture 2nd detector load, the composite waveform should appear as in Fig. 40-11, unless some kind of trouble, such as incorrect rf-if alignment, is ahead of this point. If the waveform is normal here, we begin signal tracing, and any deviation indicates some fault in the stage where it occurs. Each tube should amplify the signal and turn the waveform upside-down as the probe is moved from grid to plate – a tube which doesn't should be checked.

When an abnormal waveform is found, make a tube and voltage check of that stage. Look for open or leaking coupling capacitors, off-value resistors, anything which might change the bias or plate or screen voltages. Trouble in a peaking coil ordinarily distorts the shape of a horizontal sync pulse. The normal sync pulse is illustrated at *a* of Fig. 40-12. At *b*, is shown the effect when the higher frequencies are lost, which results when a peaking coil opens or becomes shorted.

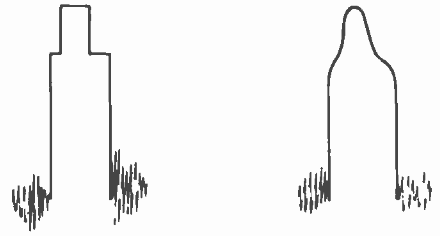

(a) Horizontal sync pulse normal

(b) Loss of higher frequencies

Fig. 40-12

"Clipping" of the sync pulses is a fairly common trouble, illustrated in Fig. 40-13. A clipped sync pulse is shown at *b*, the normal pulse at *a*. This can be caused by defective tubes or components in the video amplifier, as mentioned above. It can also be caused by undesired limiting action resulting from feeding too strong a signal into the video amplifier. An excessive signal here can result from improper setting of the AGC threshold or from trouble in the AGC circuit. At *c* is shown the rare case where clipping occurs at the white level.

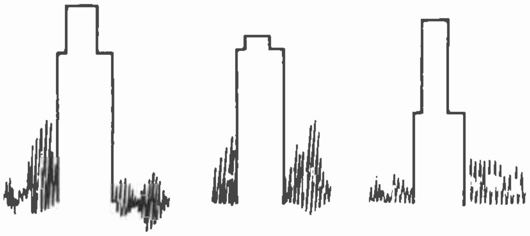

(a) Horizontal sync pulse normal

(b) Clipped sync pulse

(c) Saturation of whites (reverse clipping)

Fig. 40-13

When clipping occurs, the level of the sync pulses is brought close to that of the blanking and picture blacks, so it becomes difficult or impossible for the sync separator to function properly. The result varies from poor sync to complete loss of sync, depending upon the degree to which the pulses are clipped. Horizontal picture pulling may accompany the poor sync. This pulling affects only the picture, not the raster.

The same symptoms will occur without clipping or limiting, if the amplitude of the sync pulses is reduced in some other manner without changing the height of the picture signal. This frequently happens as a result of *poor low-frequency response* in the r-f, i-f or video sections. The higher-frequency picture signals are amplified normally, but the low-frequency picture signals and the sync pulses receive less amplification, with the result that the sync pulses may be at or below the amplitude of a portion of the picture signal. These sync pulses are perfectly formed, but have insufficient amplitude.

The poor low-frequency response may be in the r-f or i-f amplifiers, as a result of the picture carrier being located too far down on the slope of the response curve. This is discussed in detail in the lesson on alignment. In such cases, the reduced amplitude of the sync pulses is apparent in the waveform obtained from the load resistor of the picture 2nd detector. The trouble may also occur in the video amplifier, due to a change in a load resistor or an open or changed-value coupling capacitor.

Interpreting waveforms taken from the video amplifier is somewhat easier if a low-capacitance probe is used. A direct probe can be used, but it causes loading and decreases the high-frequency response of the scope to some extent, which may cause a rounding of the corners on the leading edges of the horizontal sync pulses. With practice, it's not too difficult to tell the difference between this effect and distortion due to trouble in the circuits. If the rounding effect proves troublesome, try placing the probe at the cathode of the tube, after temporarily disconnecting the cathode bypass capacitor.

When the low-capacitance probe is used, in low-level stages, the vertical gain of the scope must usually be turned up, because this type of probe usually causes a 10x attenuation.

Signal Tracing Sync and Deflection Circuits. – The procedure in signal tracing these circuits is essentially the same as

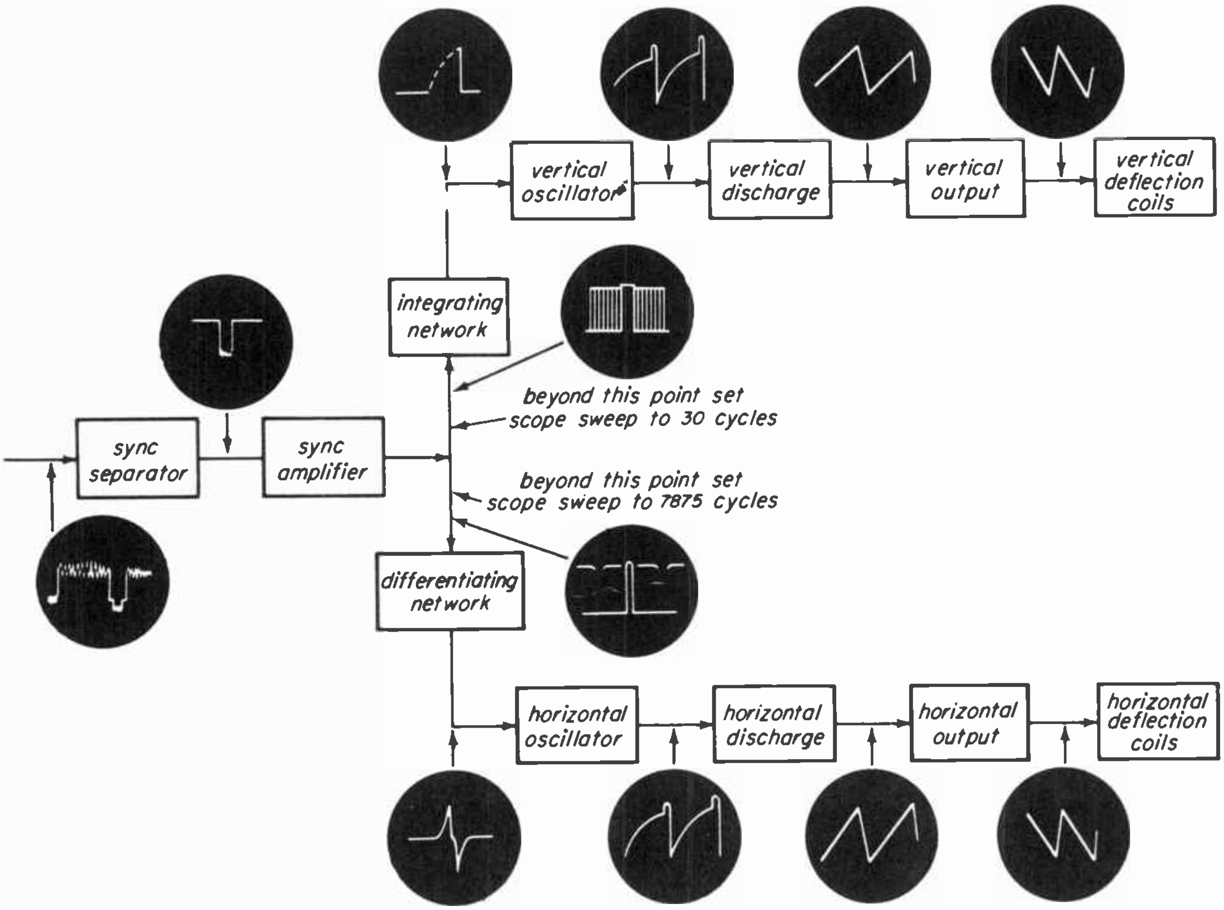

Fig. 40-14

that described for the video amplifier, except that the horizontal and vertical signals are sent to separate circuits after leaving the sync amplifier. In different receivers, a great variety of circuits and circuit variations will be found, so the manufacturer's service data must be regarded as the final authority for the exact waveform at any point in a particular circuit. As a simplified guide, however, the block diagram of Fig. 40-14 shows the conventional arrangement of circuits and the *approximate shapes* of the waveforms at various points.

Set up the scope to observe either the horizontal or vertical waveform, and work from the input of the sync separator toward the deflection coils. In many cases, the symptoms will indicate that the trouble is probably in a particular circuit or group of circuits, so these will be checked first. Deflection troubles, for instance, are ordinarily checked by starting at the horizontal (or vertical) oscillator, working to the discharge and output stages, and finally to the deflection coils or plates. Incorrect waveshapes at these stages can be easily recognized.

NOTES

NOTES

TELEVISION SERVICING COURSE

PREPARED BY

RCA INSTITUTES, INC.

A SERVICE OF *RADIO CORPORATION OF AMERICA*

HOME STUDY DEPARTMENT
350 West 4th St., New York 14, N. Y.

LESSON FORTY ONE

ALIGNMENT

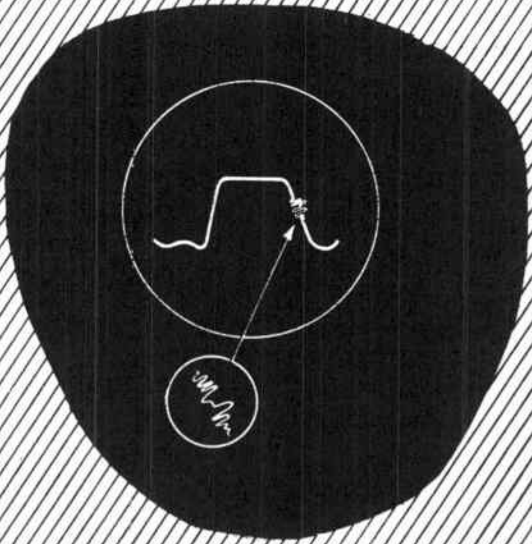

Lesson 41

NEED FOR ALIGNMENT

41-1. The resolution or definition of the picture or test pattern on the kinescope often indicates whether or not a TV receiver needs alignment. In general, the alignment should be checked when any of the following conditions appear:

1. In weak-signal areas, when pictures are weak, with more snow than is normal, and the condition cannot be remedied by tube substitution.
2. When weak signals cause *regeneration*, which shows up as horizontal smearing in the wedges of the test pattern. Figure 41-1 illustrates this condition.

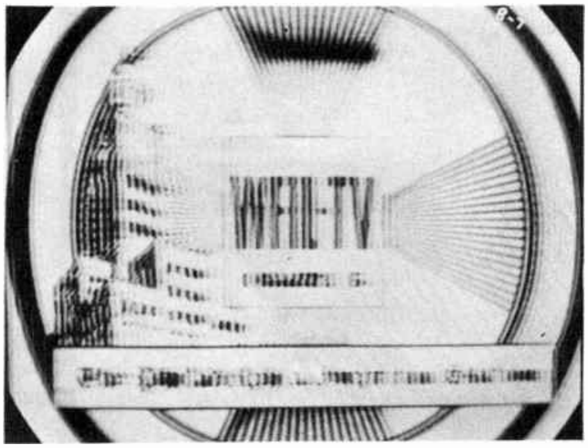

Fig. 41-1

3. When *tunable ghosts* appear. If varying the fine-tuning control changes the spacing between the ghosts and the true images, alignment is needed. Ordinary ghosts, caused by reflections, have fixed spacing.
4. When *tunable smear* appears. Smear can best be described as a blurring of sharp edges in the picture, especially on the blacks. This is usually noticed as a white smear trailing off the edge of a black area, for about ¼ inch. If the length of the smear can be varied with the fine-tuning control, alignment is needed. Varying the fine-tuning changes the picture i-f.
5. When poor low-frequency response appears. To check this possibility, roll the picture out of sync; first vertically, then horizontally. The vertical sync and blanking should move slowly from top to bottom; the horizontal should move from right to left. (The phasing circuit must be adjusted if the horizontal oscillator uses AFC.) Turn down the contrast control and increase the brightness until the sync pulse being observed is dark gray. The sync pulse should appear darker than the blanking, the blanking should be at least as dark as any gray in the picture, and the sync pulse should remain the same shade as it passes across the screen. The left-hand edge of the horizontal sync should be sharp, and definitely darker than the gray of the blanking. If anything differs from this description, check the video amplifier for a defect causing poor low-frequency response. If none is found, the set needs an alignment check.
6. When the best signal that can be obtained on a reasonably strong signal shows poor resolution. This appears on all stations as fuzziness and loss of fine details, and cannot be cured by focus or tuning adjustments. Resolution can be checked by tuning in a test pattern, adjusting for the best possible picture, and observing the wedges.

The following symptoms indicate that the sound i-f amplifier may be in need of alignment.

1. Weak sound.
2. Distorted sound, which cannot be improved by varying the fine-tuning control.
3. Ignition or electrical noise in the sound of separate-sound sets. It should be possible to null this noise by means of the fine-tuning control.
4. 60-cycle hum in the sound, which does not null out when the fine-tun-

ing control is rotated. This hum is produced by heater-cathode leakage, often in the discriminator tube. There is normally a small amount of leakage and hum, but it is nulled out with correct alignment of the i-f amplifier and discriminator circuits.

5. Picture buzz in the sound. This is a buzzing which changes in pitch when different scenes appear on the kinescope. It is caused by the AM modulation of the picture carrier being impressed on the FM of the sound carrier. If the limiter and discriminator are properly aligned, picture buzz should not appear in the sound. Picture buzz is particularly troublesome in some early intercarrier sets, if the sound is taken off at the first or second video amplifier. Careful alignment of the sound section and discriminator is important in these receivers.

Resolution. – Resolution, which may also be called definition or detail, is important to the quality of the picture on the screen, since it determines how many individual details can be distinguished. As explained in Lesson 33, horizontal and vertical resolution can be checked by observing the horizontal and vertical wedges of a test pattern. This aids greatly in determining whether or not a receiver needs alignment. Figure 41-2 illustrates how the NBC test pattern should appear on the kinescope of a receiver which is properly adjusted and operating normally.

Fig. 41-2

When the r-f, pix i-f, and video circuits are properly aligned and responding equally well to all the video frequencies, the vertical and horizontal wedges appear equally strong.

When the circuits are not responding correctly to all the video frequencies, one of the sets of wedges appears gray, while the other set remains a normal black. If the high-frequency response is poor, the vertical wedges become gray. If the low-frequency response is attenuated or distorted, the side wedges appear weaker than the vertical ones. This condition is illustrated in Fig. 41-3.

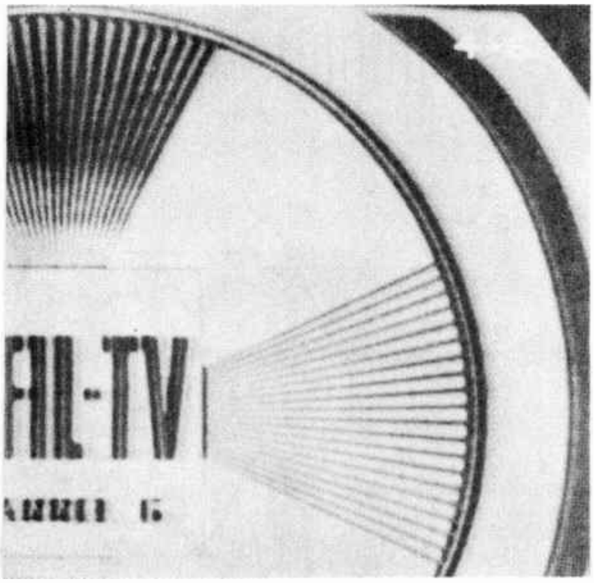

Fig. 41-3

MODULATION, SIDEBANDS, AND RESPONSE CURVES

41-2. In the process of visual alignment, we use an oscilloscope to give us a picture of what is going on in the circuit or circuits being checked. Therefore, we need a thorough understanding of what the scope is showing, in order to interpret the various presentations.

Modulation. – Modulation is the process of varying the carrier wave put out by the transmitter to make it carry the information to be transmitted. This information may be voice, music, or the video frequencies necessary to reproduce a picture. It may be impressed on the r-f carrier wave in several ways, the most common of which is amplitude modulation (AM). Amplitude modulation is used to impress picture information on the r-f picture carrier. In this system, the amplitude of the carrier wave is varied according to the variations in the information to be transmitted. Figure 41-4 shows, in *a* and *b*, the carrier and the waveshape of the signal to be broadcast. When the carrier is modulated by this signal, it appears as shown at *c*.

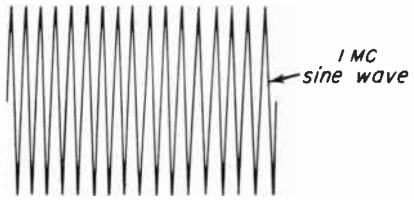

(a) r-f carrier

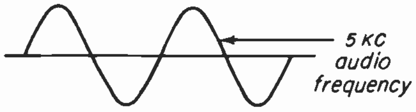

(b) modulating signal

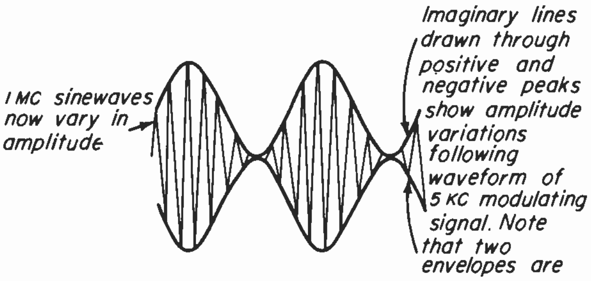

(c) amplitude modulated carrier

Fig. 41-4

When an r-f carrier is amplitude modulated, two changes occur:

1. The height of each cycle of the carrier is changed.
2. New frequencies (r-f) are produced on both sides of the r-f carrier frequency.

When we draw a line through the peak amplitudes of the r-f cycles, two imaginary modulation envelopes are produced, as shown in *c* of the diagram. One envelope is above the zero axis in amplitude; the other is below the zero axis in amplitude. The new frequencies, which are called ***sidebands***, differ from the carrier frequency by an amount equal to the modulating frequency. One sideband is above the carrier in frequency; the other is below the carrier in frequency. This can be seen in Fig. 41-5. The r-f carrier has a frequency of 1 mc, and the modulating signal is a 5-kc sine wave. The amplitude-modulated carrier still has a frequency of 1 mc, but the individual cycles are varying in strength at a rate equal to the frequency of the modulating signal, or 5 kc. This rate of change produces two new frequencies:

1 mc *plus* 5 kc = 1.005 mc
1 mc *minus* 5 kc = 0.995 mc

Sidebands. – The output from the transmitter consists of the 1-mc carrier, the upper side frequency of 1.005 mc, and the lower side frequency of 0.995 mc. *Only* these three frequencies are present when the carrier is modulated by an unchanging 5-kc signal. This is shown in Fig. 41-5.

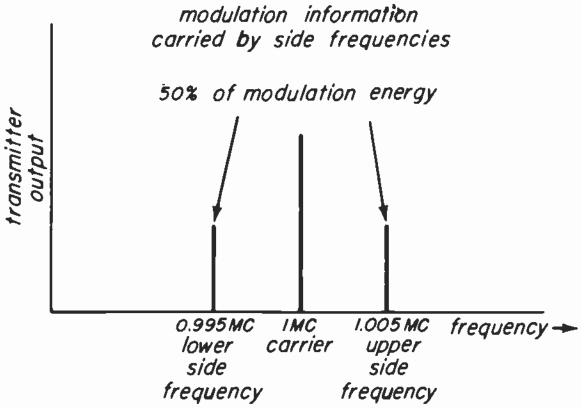

Fig. 41-5

All the modulating information is carried in *each of these side frequencies.* A side frequency can never be greater in amplitude than one-half the amplitude of the carrier; if the carrier is 100-percent modulated, each side frequency has an amplitude exactly half that of the carrier. One half the energy of the modulating signal is carried in each side frequency; thus in the case of a completely modulated wave, each would contain one-fourth as much power as the carrier.

None of the modulating information appears on the carrier alone. If a communications receiver which tuned with extreme sharpness were adjusted to exactly 1 mc, the 5-kc audio-modulating signal could not be heard. This is shown in Fig. 41-6.

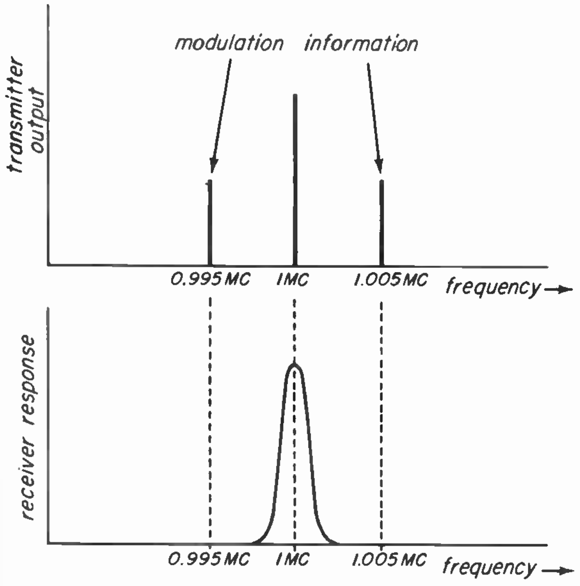

Fig. 41-6

The sharp-tuning receiver accepts a band of frequencies only a few hundred kc wide, and the 5-kc signal cannot be heard unless the receiver responds to a sufficiently wide band to take in one of the side frequencies. A receiver which will accept a much wider band of frequencies on either side of the carrier is needed. Note that we only need receive one sideband – and it makes no difference which one it is. This is shown in Fig. 41-7.

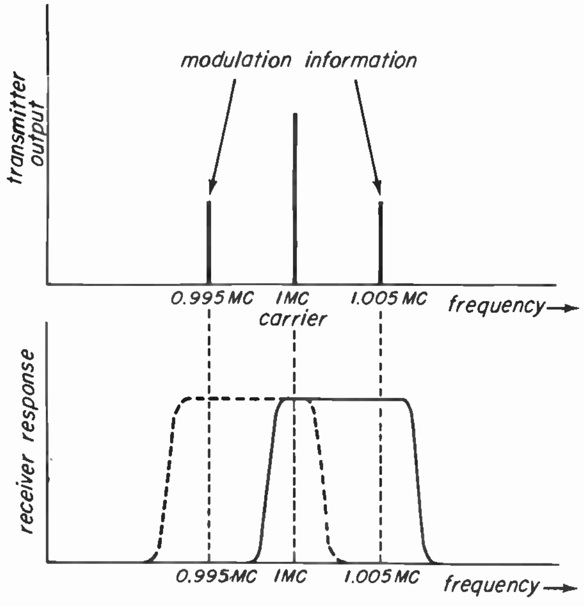

Fig. 41-7

When we change our modulating signal from a single frequency to a complex signal, such as voice or music or a video signal, we encounter a great number of frequencies, continuously varying from about 30 to 9,000 cps in the audio range and from about 30 cps to 4 mc for video signals. *Each one of the frequencies produces a pair of side frequencies,* so we now have a whole band of frequencies on each side of the carrier. These are called the upper and lower sidebands. If we assume that the highest audio frequency used is 5 kc, instead of only the three frequencies shown in Fig. 41-5 we have complete sidebands like this:

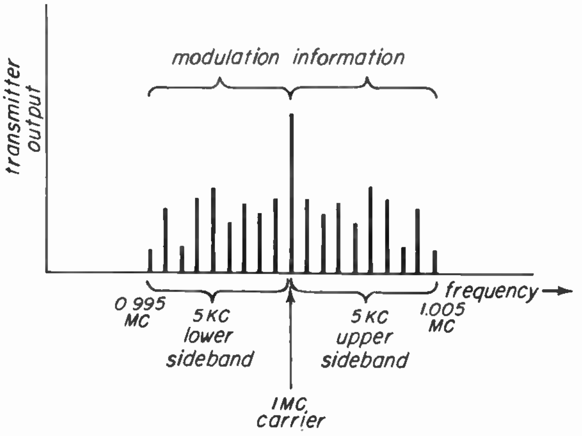

Fig. 41-8

Each sideband carries all the modulating information and one-half the modulation energy, just as in the case of the 5-kc signal, so the receiver need only respond to the carrier and one sideband to reproduce the transmitted information in full. In fact, we can go even further and filter out all or part of one of the sidebands *before the signal is transmitted.*

This makes it possible for more transmitting stations to operate in a given frequency range, since only half the bandwidth of double-sideband transmission is required.

Note that the bandwidth of the carrier plus both sidebands is twice the highest modulating frequency. In Fig. 41-8, the highest modulating frequency was 5 kc, and the total bandwidth was twice this, or 10 kc. For the composite video signal which transmits television picture information, however, the highest modulating frequency is about 4 mc, which would normally require a bandwidth of 8 mc for the picture signal alone. Yet the standard television channel is only 6 mc, and this must include the frequency-modulated sound signal, which requires a bandwidth of 50 kc.

Vestigial Sideband Transmission. – Practical difficulties prohibit using single-sideband transmission for the television picture carrier. Serious phase distortion would result if the entire lower sideband were removed, so we remove only that part of it which is farthest removed from the carrier. Side frequencies more than 1.25 mc below the carrier frequency are filtered out. Since the entire upper sideband of 4 mc is transmitted, but only 1.25 mc of the lower sideband, this system is called vestigial sideband transmission.

Actually, this method is a combination. For video modulating frequencies up to 1.25 mc, it is double-sideband transmission, but for the higher video modulating frequencies from 1.25 to 4 mc, it is single-sideband. We can see this in Fig. 41-9.

The diagram shows at *a* the transmitter picture carrier and all the side frequencies which could be produced. These are the side frequencies which would result if the carrier were modulated by all frequencies from 30 cps to about 4 mc, and if each modulating frequency had equal strength. Normally, the carrier is seldom modulated at the same time by all these frequencies, and the modulating frequencies are not always equal in strength. However, the diagram indicates that when any set of side frequencies within the 30-cps to 4-mc range are radiated, they have the relative strength shown.

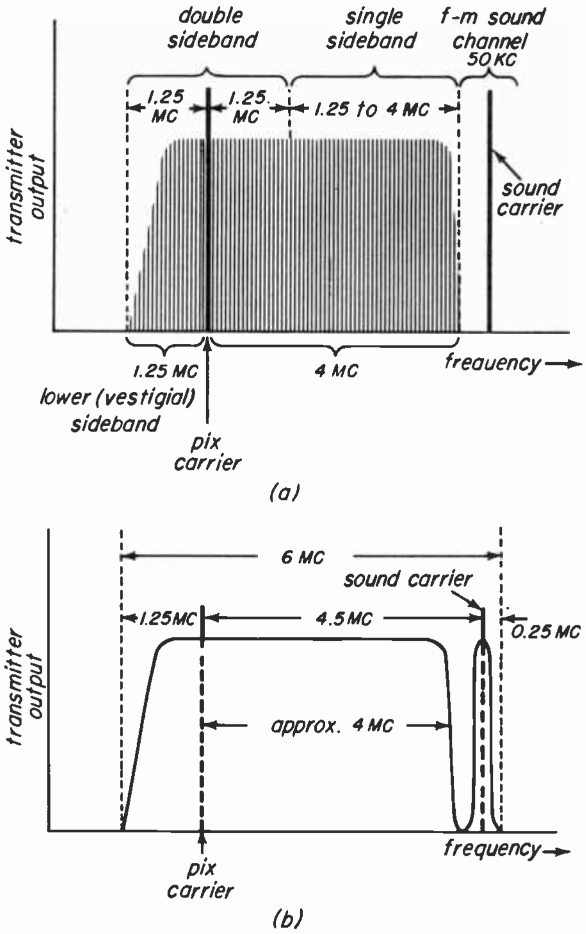

Fig. 41-9

The diagram at *b* is merely a more conventional way of indicating the relative strength of the signal sent out by the transmitter at each frequency in this 6-mc range.

If we attempted to use double-sideband transmission for the picture signal, the highest video modulating frequency which could fit in the 6-mc channel would be less than 3 mc, and horizontal detail would be lost.

What is a Receiver Response Curve? – Thus far, we have been discussing curves which represent the frequencies sent out by the transmitter. We must now consider curves which illustrate frequencies at the TV receiver.

The response curve of a receiver is a curve showing the relative amplitude with which signals of various frequencies pass through one or more circuits of a receiver. Consider a parallel-resonant input circuit feeding the grid of an amplifier tube. We know that this circuit has a resonant frequency which depends upon the values of *L* and *C*, and that it offers maximum impedance to signals at resonance, permitting these signals to build up a large voltage. The relative amount of voltage developed by any signal depends principally on how close to the resonant frequency the signal is, and on the *Q* of the circuit. If the *Q* is high, the circuit will be sharply resonant, and a signal must be quite close to resonance to develop an appreciable voltage.

Assume that the circuit has a high *Q*, and that the resonant frequency is 1,000 kc, as shown at *a* in Fig. 41-10. If we inject equally strong signals at various frequencies around 1,000 kc and measure the voltages at the tube grid, we can plot the measured voltages and see the relative ease or difficulty with which the signals pass the circuit.

Suppose the first signal is at the exact resonant frequency of 1,000 kc. Measuring the voltage, we find 5 volts at the tube grid, so we draw a vertical line 5 volts long at 1,000 kc on the graph, as shown in *b* of the diagram. With the voltmeter still connected, we vary the frequency toward 1,001 kc. The voltmeter reading immediately drops off, and at exactly 1,001 kc the signal is developing only 2 volts. We plot this on the graph. Halfway between 1,001 and 1,002 kc the voltage drops to zero, so we put a small mark at that point on the graph. On the low side of resonance, the meter reads 2 volts at 999 kc and drops to zero halfway between 998 and 999 kc. With all the lines representing the voltage developed at each frequency, the graph should look like that at *b* in Fig. 41-10.

This graph gives us a picture of how much voltage signals at various frequencies will develop, and the comparative ease or difficulty with which they can pass through the circuit. If we draw an outline, by running a curve through the tips of the lines, we have the same information in the form of a conventional response curve, illustrated at *c*. The distance from any point on the curve straight down to the base line shows the relative amplitude which a signal at that frequency could develop in this circuit.

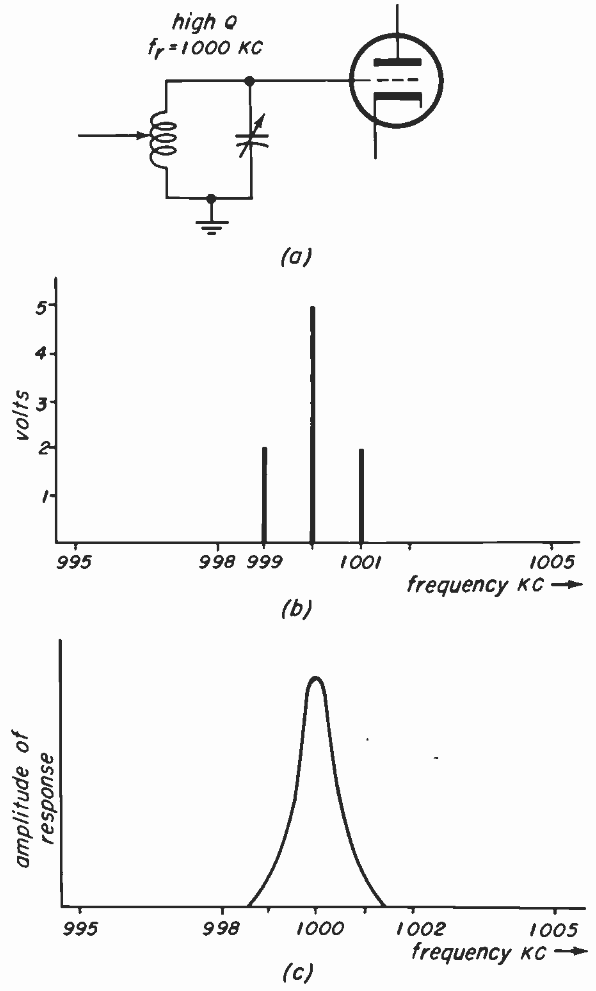

Fig. 41-10

Now compare the response curve at *c* with the curve of the sharply-tuned receiver of Fig. 41-6. That receiver was too narrow-band to tune either of the side frequencies carrying the 5-kc modulating signal. This high-*Q* resonant circuit, then, is not satisfactory to receive signals carrying audio information in the sidebands.

We can reduce the *Q* of this circuit and "*broadband*" it by introducing resistance, as shown at *a* of Fig. 41-11. Now, if we inject equally strong signals at various frequencies, many more are able to develop appreciable voltages across the circuit, and the response curve becomes flat-topped, indicating that the circuit responds to a much wider band of frequencies. In fact, it now has a response even wider than that shown in Fig. 41-7, and will receive the side frequencies shown there, reproducing the 5-kc modulating signal.

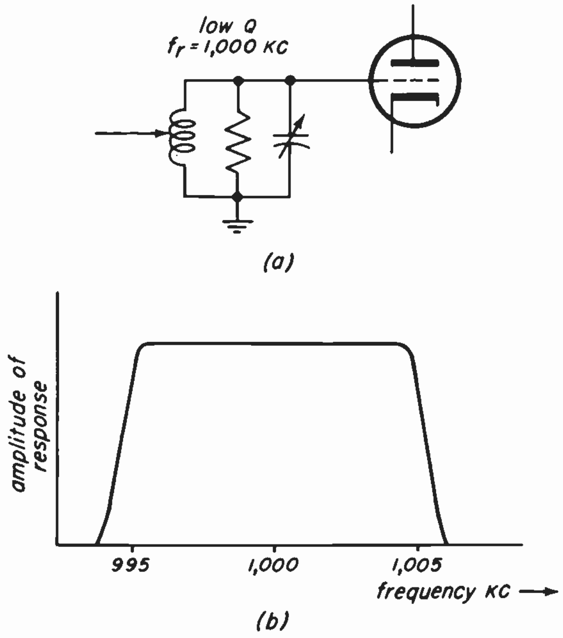

Fig. 41-11

This series of illustrations demonstrates two basic facts:

1. The response curve shows how well signals of various frequencies within a band are passed through a particular circuit or set of circuits.
2. To reproduce all the signals impressed on a carrier, the response of the receiver must be sufficiently broad to accept at least one entire sideband, which includes all the modulating frequencies.

In other words, we must adjust the response of the receiver circuits according to the range of frequencies contained in the modulating signal, whether audio or video. To receive a station transmitting double sidebands 9 kc wide, as shown at *a* of Fig. 41-12, all the signal circuits in the receiver must be tuned broadly enough to accept all the frequencies in the full 9-kc bandwidth, as shown at *b*. Not only this, but all the circuits must be tuned to the *same* 9 kc, as will be seen later. If the circuits are broad-tuning, and the set is correctly aligned, all the audio-modulating frequencies from 0 to 9,000 cycles (9 kc) will be able to develop the same strength at a given point. The drawing at the right in *b* shows that all signals up to 9 kc develop 5 volts. If any signals above 9 kc were transmitted, they would be attenuated, because the response drops off sharply above this, as can be seen in the drawing.

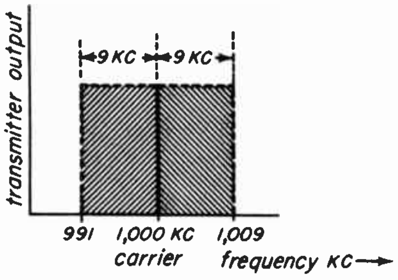

(a) transmitter output

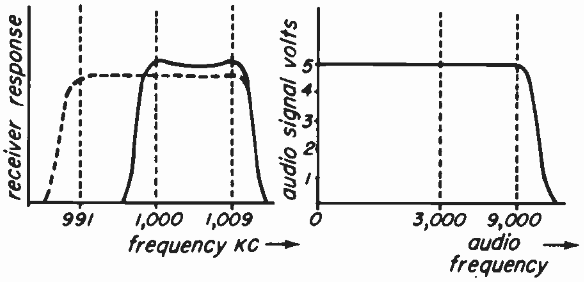

(b) receiver correctly aligned

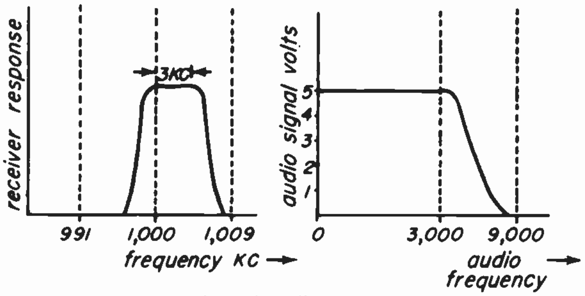

(c) receiver insuficient bandwidth

Fig. 41-12

We could build the receiver circuits so that they would accept a full 18-kc bandwidth, in which case they would accept both sidebands, as shown by the dotted line in *b*. AM radio receivers use this arrangement. The voltage level of the signal would be about twice as high – theoretically, about 10 volts at the second detector instead of 5 – because each sideband contains 50 percent of the modulation energy. Receiving both of them thus boosts the signal level. This is offset, however, because broadening the response of an amplifier circuit reduces the over-all gain, so the result might be less than the original 5 volts, depending upon how much gain was lost.

If there isn't enough bandwidth to receive a complete sideband, we lose part of the modulation information, as shown at *c* of Fig. 41-12. Here the receiver circuits are out of alignment. They respond to only 3,000 cycles, and sharply attenuate the modulating frequencies from 3,000 to 9,000 cycles. This means that if we turned to a station broadcasting orchestral music, we would not hear high notes from the violins, clarinets, oboes, etc., and even human voices might sound distorted because of the loss of higher audio frequencies.

Alignment. – Alignment consists of tuning the resonant circuits of the receiver r-f and i-f stages: (1) to make the response broad enough to pass all sidebands of the signal, and (2) to align all the resonant circuits to the correct frequency band.

Figure 41-13*a* shows three amplifier circuits in cascade. Any signal passing through the receiver must pass through all three of these amplifiers, so anything which happens to the signal in any one of them can spoil the over-all reception. For instance, if #1 and #3 were tuned broadly enough, but #2 had a narrow-band response like that illustrated in *c* of Fig. 41-12, all the modulating frequencies from 3,000 to 9,000 would be attenuated as they passed through #2. All these higher-pitched sounds would be missing at the loudspeaker.

Assume, however, that all three circuits tune a 9-kc band without difficulty. If the circuits are correctly aligned, each one tunes from 1,000 kc to 1,009 kc, which includes the 1,000-kc carrier plus the upper sideband, and the three individual response curves fall at the same place on the graph. This is illustrated at *b* of Fig. 41-13. Note that *all* the circuits accept *all* the frequencies in the desired range, so the output signal after detection is "flat" (equal in strength) for all the audio-modulating frequencies from 0 to 9,000 cycles.

Now, consider that one circuit – #3 – has gone out of alignment. This is shown at *c*. Circuit #3 still has a bandwidth of 9 kc, but it is accepting frequencies from 994 to 1,003 kc, instead of the desired 1,000 to 1,009 kc. That is, it is not aligned to the correct frequency band. As a result, all the desired frequencies pass through circuits #1 and #2 at full strength, but when they reach #3, the frequencies above 1,003 kc are sharply attenuated. Consequently, these frequencies are missing from the output, as shown by the shaded sections of the drawing, and the high-frequency portion of the modulation information has been lost.

If we re-tune circuit #3, we can move the response curve back up until it coincides with the other two. When we do this, #3 is brought back into alignment, and the curves again look like those in *b*.

How can both the high and the low frequencies be cut off? Examine the drawing at *d* of Fig. 41-13. Again circuit #3 is tuned too low, so it is accepting the band of frequencies between 994 and 1,003 kc, and we're losing the frequencies between 1,003 and 1,009 kc (the high end). But this time circuit #2 is also out of alignment – tuned a little too high and accepting only frequencies between 1,002 and 1,011 kc. The low frequencies, from 1,000 to 1,002 kc, are blocked when they reach circuit #2, and disappear from the output along with the high frequencies, as shown by the shaded portions of drawing *d*. In this case, the only audio frequencies getting through all three circuits are those from 2,000 to 3,000 cycles. All the rest are lost.

If a scope were connected at the output of the detector, with a sweep generator feeding the input #1, the waveshape on the scope would look like the center unshaded portion of the curves at *d*. As we re-tuned circuit #2 toward the proper frequency, we would see the left-hand side of the waveform (marked X) move to

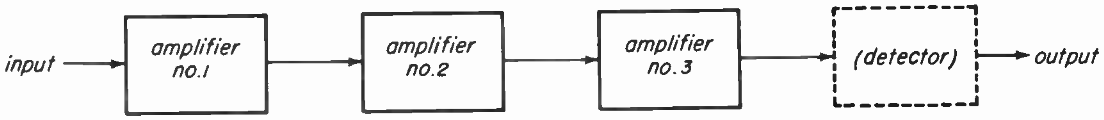

(a)

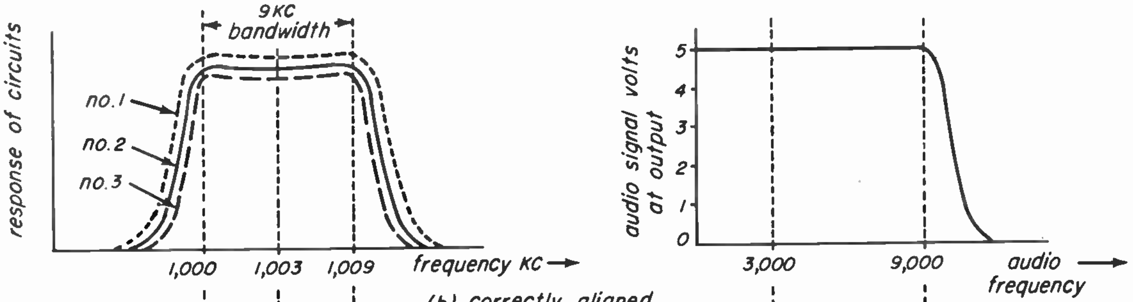

(b) correctly aligned

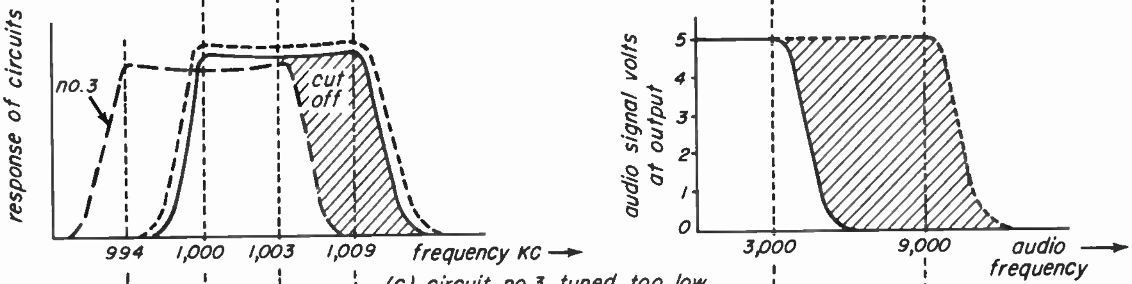

(c) circuit no.3 tuned too low

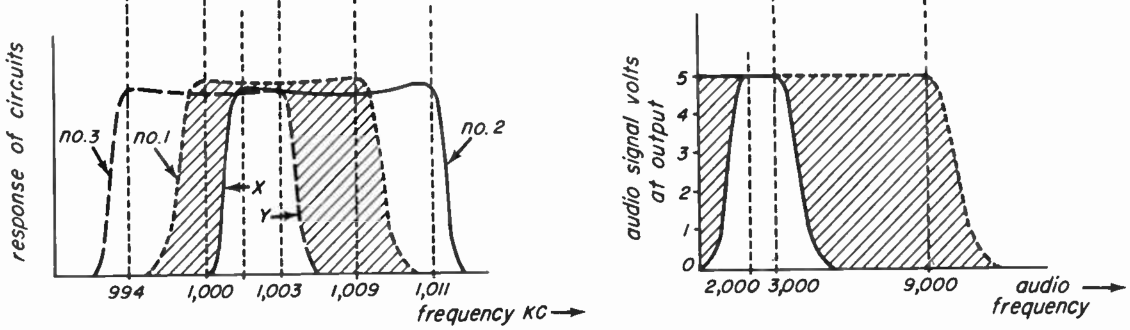

(d) circuit no.3 tuned too low,
circuit no.2 tuned too high

Fig. 41-13

the left. When it reached the proper position, the low-frequency response would be restored and the waveform would look like that in *c*. Then, as we retuned circuit #3, the right-hand side of the waveform (Y) would move to the right until it reached 1,009 kc and the final shape appeared as in *b*. High-frequency response would be fully restored, and the circuits would be in alignment.

Of course, it is possible when re-tuning to move any curve too far, and overshoot the correct adjustment point. For example, in moving curve #2 down to 1,000 kc, we might go beyond and stop at 998 kc instead. Thus we would correct the low-frequency response, but the right-hand side of the curve would be located at 1,007 kc, cutting the highs. Therefore, it is important in aligning to watch the frequencies as well as the amplitude and shape of the waveforms. The baseline, on the scope just as in the drawings, represents frequency. Knowing what frequencies the sweep generator is producing, we can estimate the approximate frequency of any point on the baseline. With a marker generator, we can locate any frequency point with exactness.

TELEVISION RECEIVER RESPONSE

41-3. We've seen that the circuits of a receiver must respond to a certain bandwidth or range of frequencies which depends upon the modulating frequencies impressed upon the carrier. Only when *all* the modulating frequencies develop approximately equal amplitude can the receiver reproduce all the information transmitted, whether the notes of the audio range or the video details of a television picture.

Let's take a look at the output curve of the television transmitter. This is shown at *a* of Fig. 41-14. Since completely eliminating one of the sidebands leads to serious phase distortion, vestigial sideband transmission is used; that is, the entire upper sideband and the 1.25-mc low-frequency part of the lower sideband is transmitted. The remaining 2.75 mc of the lower sideband is completely eliminated before transmission. This gives, in effect, double-sideband transmission for video modulating frequencies up to 1.25 mc, and single-sideband transmission for the video frequencies from 1.25 to 4 mc.

Each sideband in the AM signal carries 50 percent of the modulation energy. Therefore, the lower video frequencies have 100-percent modulation, while the higher frequencies, from 1.25 to 4 mc, have only 50-percent modulation. Thus the low video frequencies are boosted considerably.

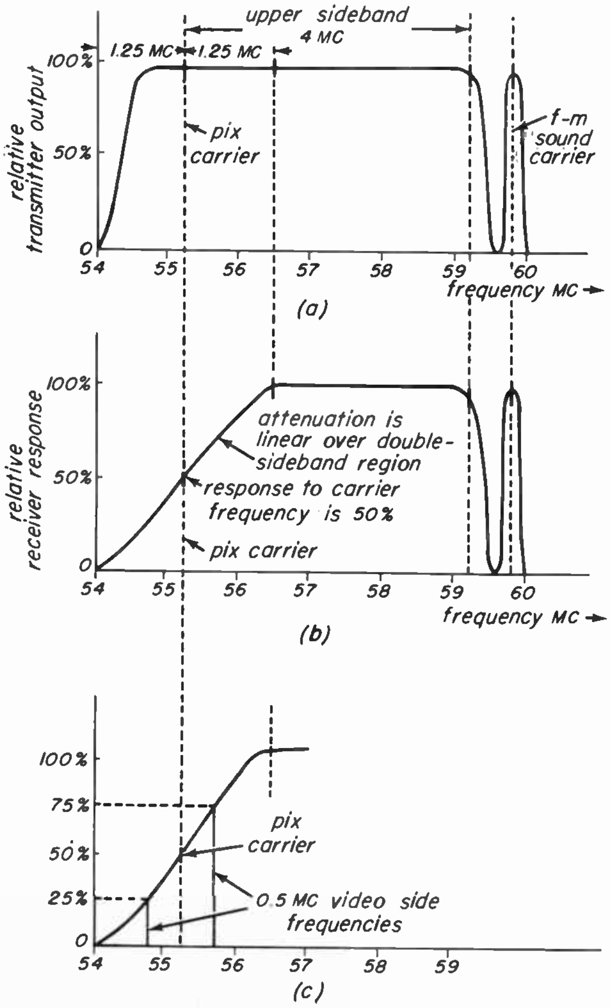

Fig. 41-14

At *b* of Fig. 41-14 is shown the characteristic over-all response curve of the television receiver for Channel 2. The circuits are so arranged that an approximately straight-line (linear) slanted response exists on the picture-carrier side of the curve When the receiver is properly aligned, the picture carrier frequency develops only about half the signal strength developed by the higher video frequencies. High video frequencies are represented by side frequencies farthest removed from the carrier. Since the double-sideband (low-frequency) portion of the transmission carries twice as much modulation energy as the rest, the 50-percent attenuation of this portion at the receiver corrects for the difference in sideband strength which occurs at the transmitter.

This can be clarified by considering a single video frequency — say 0.5 mc — which is in the double-sideband portion. Two side frequencies are transmitted, each 0.5 mc away from the carrier. What happens to these frequencies in the receiver circuits is shown at *c* of Fig. 41-14. The side frequency above the carrier is able to develop only 75 percent the signal strength of video frequencies above 1.25 mc. The side frequency below the carrier, however, develops only 25 percent of the maximum strength. Together, the two side frequencies develop 75 percent plus 25 percent, or a total strength the same as the high-frequency video signals in the single-sideband region.

The effect of locating the picture carrier midway on the slope of the receiver response curve, therefore, is that all the video modulating frequencies develop the same signal strength in the receiver.

The curve shown in Fig. 41-14*b* is the receiver's over-all response; the response from antenna to picture second detector. The shape of this curve corrects for the distortion caused by vestigial-sideband transmission.

The characteristic shape of the receiver response is produced in the i-f amplifier, since most of the receiver's gain is in the i-f amplifier. Figure 41-15*a* shows the transmitter output, and Fig. 41-15*b* shows the receiver r-f response. It can be seen that the r-f amplifier response is not the same as the i-f response. As illustrated in *c* of the diagram, the transmitter output appears the same at the antenna and the input to the converter. Compensation for vestigial-sideband distortion is made in the i-f amplifier. I-f curves for split-sound and intercarrier type receivers are shown in *d* and *e* of the diagram. Note that the response of the i-f amplifier is of the same shape as the over-all response (Fig. 41-14*b*), while the r-f response is flat and symmetrical.

Traps to minimize interference from adjacent television channels are located in the i-f amplifier. Therefore, these traps affect the i-f response curve and the over-all response curve, but not the r-f curve. This is shown in Fig. 41-15 *d* and *e*.

In intercarrier receivers, sound signals are amplified in the picture i-f amplifier. For this reason, the shapes of the i-f and over-all response curves of split sound and intercarrier receivers differ slightly, as shown in *d* and *e* of the diagram. Note that there is zero response at the sound carrier frequency in the split-sound receiver curve, while in the intercarrier receiver the response is about 5 percent above zero amplitude.

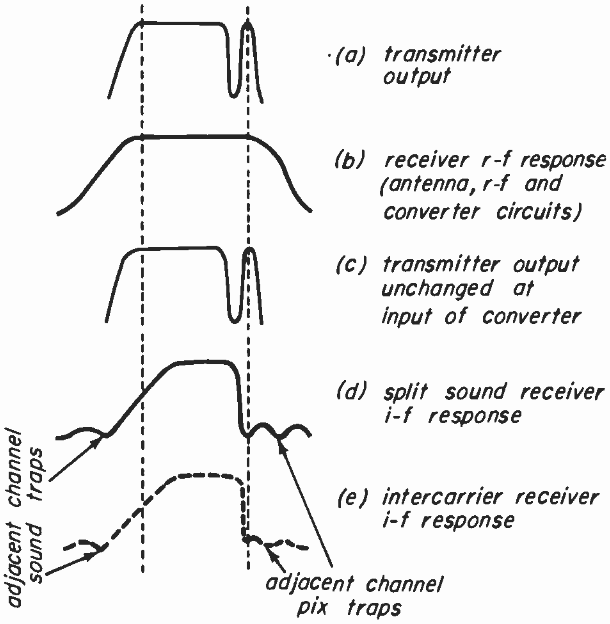

Fig. 41-15

R-f, I-f, and Video Frequencies. – Figure 41-16*a* shows an r-f response curve for Channel 2. Note that frequency increases from picture carrier to sound carrier. This always holds true. A typical i-f response is shown at *b*. Here, frequency increases from sound carrier to picture carrier. This is always true when the local oscillator operates above the frequency of the station being received, which is usually the case. The video response is illustrated at *c*. Zero video frequency corresponds to the picture carrier, and the sound carrier is near the high video frequencies in the r-f and i-f response curves. Video frequency always increases from picture carrier to sound carrier.

Figure 41-16*d* shows an over-all response curve. This curve always has the characteristic shape shown, but may be calibrated in radio frequencies, intermediate frequencies, or video frequencies. When calibrated in radio or video frequencies, the increase is from picture carrier to sound carrier; when calibrated in intermediate frequencies, it is from sound carrier to picture carrier.

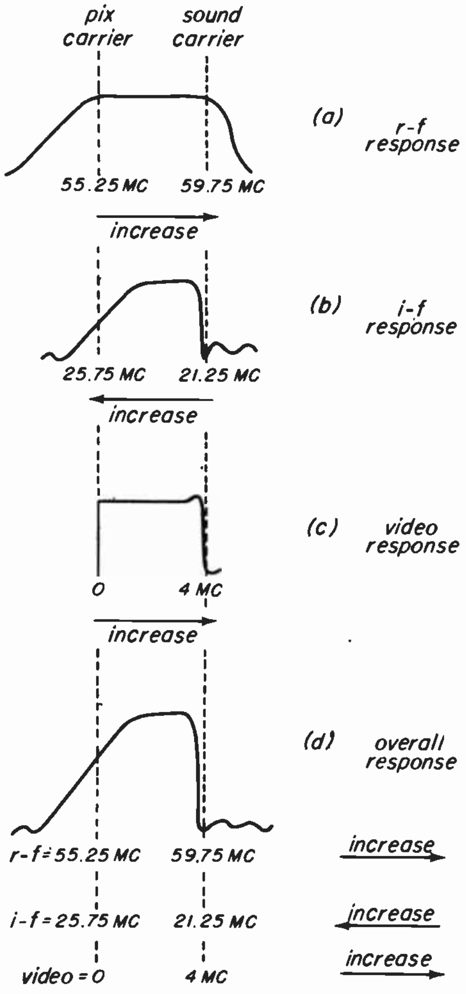

Fig. 41-16

Bandwidth Requirements. – From the foregoing discussion, we know that the various circuits must have sufficient bandwidth to pass easily all the frequencies in the transmitted signals.

The entire transmitted signal is allowed to pass unaltered through the r-f tuner, or front end. This includes both the video and sound signals, so the front end must accept the entire channel. In other words:

R-f bandwidth = 6 mc

In the picture i-f amplifier, the bandwidth depends upon whether we have separate sound circuits or an intercarrier arrangement. Even with separate sound, the sound signal may travel through some stages of the picture i-f amplifier before it is taken off at a trap. In this case, those stages which pass video-plus-sound must have greater bandwidth than those which pass the video signal alone. In general, we can say that the picture i-f amplifier will accept a bandwidth covering all the frequencies in the video signal.

Separate-sound receiver: Picture i-f bandwidth = 4 mc

In intercarrier sets, the sound signal passes through *all* the picture i-f stages, which means that there must be additional bandwidth. Ordinarily, the total is at least equal to the frequency separation between the picture and sound carriers.

Intercarrier receiver: Picture i-f bandwidth = 4.5 mc

The sound i-f amplifiers need not be as broadband as the picture i-f stages, since the total width of the sound signal is only about 50 kc. In separate-sound circuits, however, the sound i-f may vary with drift of the oscillator, so the bandwidth is made broad enough to prevent cutting off or distortion of the sound. The actual bandwidth differs from model to model, and it is best to consult the service notes.

Separate-sound receiver: Sound i-f bandwidth = 150 to 250 kc

We don't have to worry about oscillator drift in intercarrier sets, since the 4.5-mc sound i-f is determined by the separation between carriers, which is held within ±0.004 percent at the transmitting end. The only reason for maintaining a fairly broad bandwidth is to give a good linear operating slope at the discriminator or ratio detector.

Intercarrier receiver: Sound i-f bandwidth = About 200 kc

In some cases, the sound i-f bandwidths may be wider or narrower than the ones listed above, which are close to optimum.

REQUIREMENTS OF ALIGNMENT EQUIPMENT

41-4. We need certain test equipment to align TV receivers satisfactorily. Each piece of equipment must possess certain minimum characteristics if it is to perform adequately. The required units are the following:

Cathode-ray oscilloscope	(CRO or scope)
Sweep generator	(Sweep)
Marker oscillator	(Marker)
Electronic voltmeter	(VTVM)
Bias Box	

The Oscilloscope. –The requirements of the scope for alignment work are not particularly critical. The most important thing is that it should have good low-frequency response down to about 10 cps. This is necessary because the input signal from the sweep generator usually varies at 60, 120, or 240 cycles per second, with 60 cps probably the most common. If the unit is to be used for other TV servicing purposes – as it probably will be – it must meet other requirements as well.

The Sweep Generator. – Basically, the sweep generator is an oscillator which varies or "sweeps" rapidly over a particular band of frequencies. For example, when set to cover Channel 2, the output signal of the sweep starts at 52 mc, runs up to 62 mc, and back again. This is a bandwidth of 10 mc, more than enough to cover the 6-mc TV channel. While the output frequency is varying, usually at 60 cps, the output voltage should remain approximately constant.

Suppose we connect this sweep generator to the vertical plates of a scope. We can't make a direct connection, because the sweep output in this case is high-frequency r-f, so we make the connection through a simple detector or rectifying probe, as shown in Fig. 41-17*a*. The scope will show the rectified output of the detector, which is d-c corresponding in amplitude to the sweep output over the whole sweep bandwidth.

With the scope operating but no signal from the sweep, there is no vertical deflection of the CRO beam. When the sweep signal is applied, however, this output voltage deflects the spot upward or downward, depending on the polarity of the output. The distance the beam is deflected depends upon the actual voltage of the sweep signal at any particular instant. If at the same time the horizontal plates of the CRO are being fed a signal which pulls the spot from left to right during the time it takes the sweep to vary frequency from 52 to 62 mc, the spot will trace a horizontal line on the screen. Every point on the line will represent a definite frequency between 52 and 62 mc.

Two types of horizontal sweep for the CRO are used, depending on how the sweep generator varies frequency. If the frequency goes from the low end of the band to the high end at a steady rate, then snaps back to the low end, a sawtooth horizontal-deflection voltage is required on the CRO. This is the most commonly used method. If the frequency of the sweep generator is made to vary at the same rate as a sine wave (by frequency modulation), the frequency will start at the low end of the band, increase at a sinusoidal rate, then reverse itself and decrease sinusoidally from the high to the low end. In this case, there is no sudden flyback of frequency, so there can be no flyback of the CRO spot, such as is produced by a sawtooth deflection voltage. Instead, we must apply a sine wave to the horizontal plates of the CRO, which causes the spot to move from left to right at a sinusoidal rate, stop, and move back at the same rate. This corresponds exactly to the manner in which the sweep generator frequency varies, so the line traced on the screen of the scope is an accurate horizontal graph of the output frequency of the sweep generator.

In sweep generators which give an output frequency-modulated at the power-line frequency, the CRO spot always traces two curves on the screen, one representing increasing frequency from the low to the high end of the band, the other representing decreasing frequency. Under normal conditions, these two curves should be exactly alike, and it should be possible to superimpose one on the other so that they appear as one. This is accomplished with the phasing control on the sweep generator.

When the sweep generator output is fed directly to the scope, the horizontal line representing the sweep generator output will be straight if the sweep output voltage remains constant at every frequency, but if the voltage increases or decreases at some frequency, a corresponding bump or dip will appear in the line at the

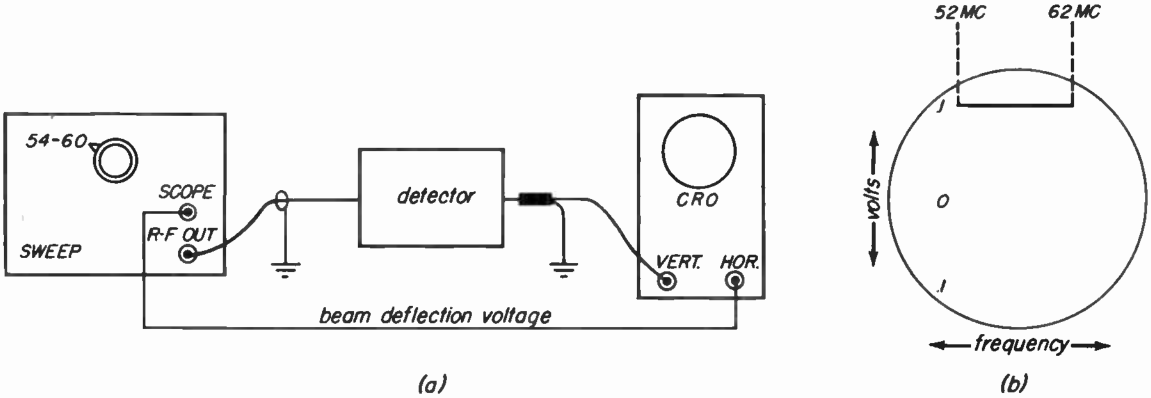

Fig. 41-17

point representing that frequency. The straight-line output of a good sweep generator is shown in Fig. 41-17*b*. It shows a constant output of 0.1 volt over the entire bandwidth between 52 and 62 mc. The graph on the CRO represents *amplitude* in the vertical direction.

If the sweep is operating at 60 cps, the CRO spot moves from the left-hand side to the right-hand side in 1/120 of a second to trace this line. During the next 1/120 of a second, the sweep frequency decreases to 52 mc, and the CRO spot moves back from right to left, tracing a second line over the first. Then the entire process is repeated.

Now, let's insert a simple resonant circuit ahead of the detector. We'll use a circuit loaded with resistance to give a bandwidth of about 6 mc, with the point of resonance at 57 mc, right in the middle of Channel 2 and the center of the sweep band. The connection is made as shown in Fig. 41-18*a*.

When the sweep is turned on, the actual sweep output is the same as before, but the trace on the CRO screen looks considerably different, as the diagram illustrates. Let's follow one cycle of the sweep output.

At 52 mc, the sweep output is 0.1 volt, but this frequency is not within the bandwidth of the resonant circuit, so no signal gets through to the detector. This means that the detector output is zero, and the scope trace remains on the zero line. Not until the sweep frequency reaches the edge of the passband at 54 mc does the CRO spot leave zero. At 54 mc, the resonant circuit permits a small signal to pass through to the detector, and the spot is deflected upward a short distance, proportional to the strength of the signal (assuming the polarity is positive).

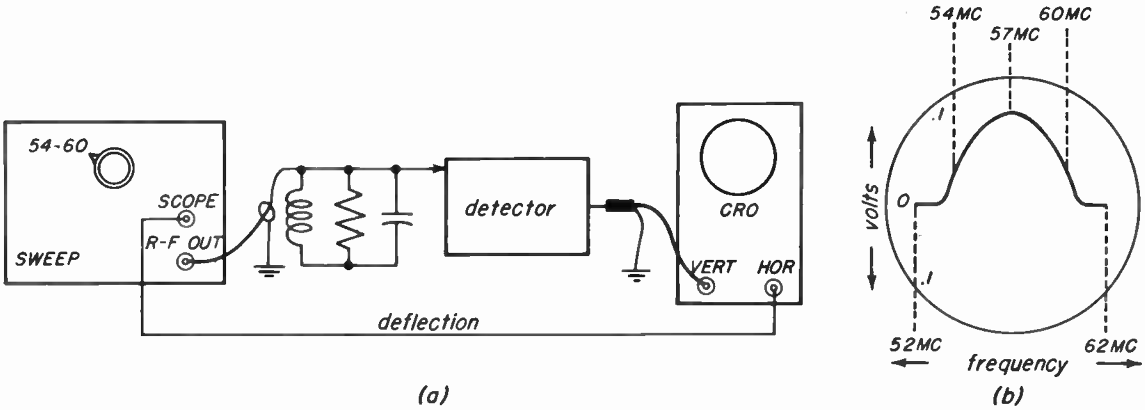

Fig. 41-18

As the sweep frequency continues to increase toward the resonant frequency, the circuit permits more and more of the output signal to pass through and be detected. Thus the rectified d-c from the detector rises in proportion to the amount of signal passed by the circuit under test, and the CRO spot traces an upward curve until 57 mc is reached. At this frequency, the circuit is permitting the sweep output signal to develop maximum strength, and the curve on the CRO screen reaches its highest point, as shown in Fig. 41-18*b*.

Above 57 mc the circuit again begins to attenuate the sweep output voltage, and the curve descends accordingly. At 60 mc only a slight signal is getting through, and above this the trace returns to zero, indicating that no signal is passed. When the sweep frequency reaches 62 mc, it reverses and traces the same curve in the opposite direction. When the phasing is adjusted correctly, these traces lie one over the other and only a single curve is seen.

The curve on the scope shows exactly how the circuit under test responds at every frequency in the sweep band. In other words, we put out a constant voltage and vary the frequency, and the circuit being tested modifies the signal amplitude according to its own bandpass characteristics. Notice that the curve traced in Fig. 41-18 is shaped exactly like the theoretical response curve of a broadband resonant circuit.

We get similar results when we feed the sweep signal into the first picture i-f stage, for example, and connect the scope to the output of the picture 2nd detector, changing the sweep frequency to cover the i-f range. This connection is shown in Fig. 41-19*a*. The i-f stages accept or reject the various frequencies within this range according to their own bandpass characteristics. If they are properly aligned, the scope will show the typical picture i-f response curve, shown in Fig. 41-19*b*.

So far these curves have been shown in the conventional aspect – with upward deflection and with the low-frequency end at the left. In actual practice, you'll just as often get response curves that are upside-down or right-to-left. Learn to read the curves in any position! Most of them are distinctive enough that this is not difficult.

When the polarity of the voltage reaching the vertical plates of the CRO is negative, it causes a downward reflection of the spot. This causes the curve to appear upside-down. The polarity of the output voltage from the circuit under test, the number of vertical-amplifier stages in the scope, and the connections to the CRO all affect the polarity of response.

If the horizontal deflection voltage is reversed in polarity, the low-frequency response appears at the right instead of the left. We cannot control this, either, but it doesn't matter so long as we recognize which is which.

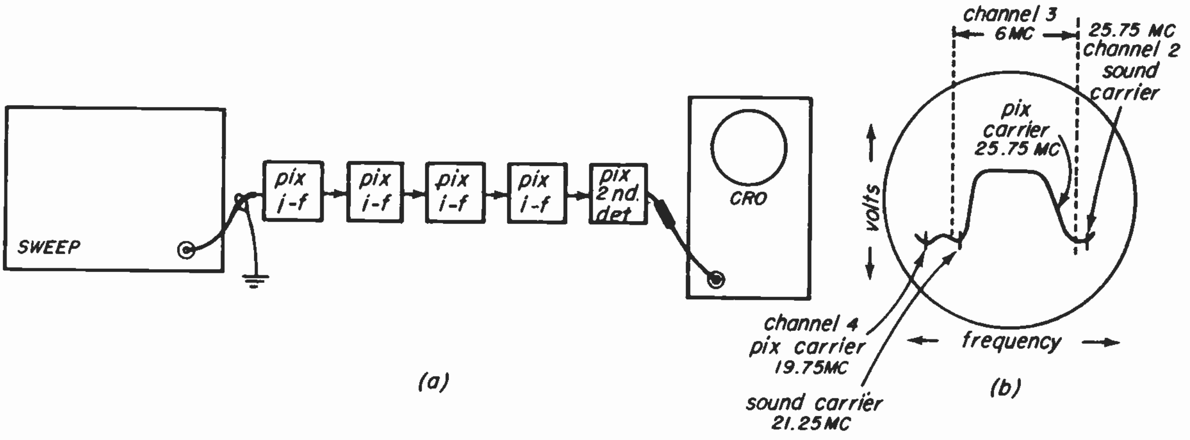

(a) (b)

Fig. 41-19

Up and down movement of the CRO spot corresponds to changes in the voltage or amplitude of the signals coming through the test circuit.

Left and right movement of the spot represents changes in frequency of the test signals from the sweep generator. In Fig. 41-19, for example, the left-hand end of the trace represents a frequency of about 19 mc, while the right-hand end is about 28 mc.

Figure 41-20 shows the four presentations of the picture i-f response curve which might be seen, depending upon the factors discussed above. The conventional aspect is shown at *a*, right-side up and low frequency at the left. The others show the same curve, with different polarities at the vertical and horizontal and CRO plates.

right-side up
low-frequency at left
(a)

right-side up
low frequency at right
(b)

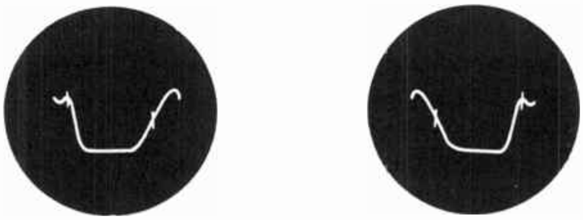

upside-down
low frequency at left
(c)

upside-down
low frequency at right
(d)

Fig. 41-20

The requirements which the sweep must meet to give good results in alignment are more rigid than those for the scope.

The output voltage over each band of frequencies covered by the sweep must be quite constant: within plus or minus 5 percent. If there is a hump or a dip in the sweep output, there will be a corresponding hump or dip in the response curve. This might lead us to suspect faulty alignment of the circuits under test, when actually the fault was with the sweep. If we realigned the set to make the curve look as it should, the resulting performance on a television signal would be very poor. The output voltage should remain flat at all positions of the attenuation control.

In respect to frequency, a sawtooth sweep should be fairly linear. That is, if 10 mc are swept in 1/60th of a second, 5 mc should be swept in 1/120th, 2.5 mc in 1/240th, etc. A non-linear output might sweep 6 mc in the first 1/120th and only 4 mc in the last 1/120th. This difference in linearity is illustrated in Fig. 41-21. The sinusoidal type of sweep is not linear, and need not be, since the same power-line sine wave is used both for the sweep generator and the CRO horizontal plates.

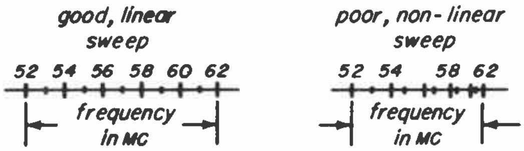

Fig. 41-21

The sweep must have narrow and wide sweep widths, and it must cover the television r-f, i-f, and video ranges. The sweep width required to align the sound i-f section should be around 2 mc, while about 10 mc is needed to cover the bandwidth of the r-f and picture i-f sections.

Since at times we feed the sweep signals through single low-gain circuit, and at other times through several high-gain circuits, an attenuation control to vary the sweep output is needed. Without such a control, we may overload the i-f amplifiers, clipping off the top of the curve. On the other hand, to get a reasonable amount of deflection when aligning a single stage, the sweep should have a useful output of at least 0.1 volt.

The sweep and the scope must operate in sync with each other. That is, the CRO spot should begin its movement across the screen at the same instant that the sweep begins its travel up or down the band of frequencies. All television sweeps, therefore, provide a deflection voltage which can be fed to the horizontal plates. (Occasionally a sync voltage is provided.) It is almost always necessary to connect these deflection terminals on the sweep generator to the horizontal input terminals on the scope. The sweep generator is then providing the horizontal plates with deflection voltage. This is why it is possible to have controls, such as phasing and blanking on the sweep generator instead of on the scope.

One of the chief reasons for using the horizontal deflection voltage provided by the sweep generator is that synchronization is much better than it would be if the scope's internal sweep were used — there is no slow drift of the presentation, which might otherwise occur. Every scope has an internal sawtooth sweep oscillator, but this cannot be used with a sinusoidal type of sweep generator. If it were, more than one curve would be obtained on the CRO screen. Some scopes have provision for internal sinusoidal deflection voltage, as well, but except in certain cases mentioned below, these cannot be used because the phase of the sweep generator output is different from that of the horizontal CRO plates, and the two traces on the screen cannot be made to appear as one.

A phasing control is provided on all sweeps that have a double trace (one trace formed on left-to-right movement of the spot, the other on the return movement). This control furnishes a means of moving the two traces horizontally until one is superimposed on the other. This is illustrated at *a* and *b* of Fig. 41-22. If the 60-cycle line voltage is not a sine-wave voltage, the two traces cannot be made to appear as one, because their shapes will be slightly different.

On some sweeps, a blanking control blanks the sweep output during the period of the return trace. Instead of forming the second trace, the spot drops to the zero point and forms a base reference line as it returns to the starting point. Fig. 41-22*c* shows how this looks on the screen of the scope.

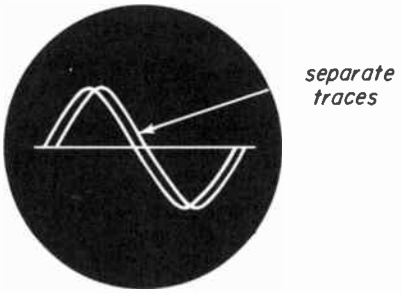

(a)

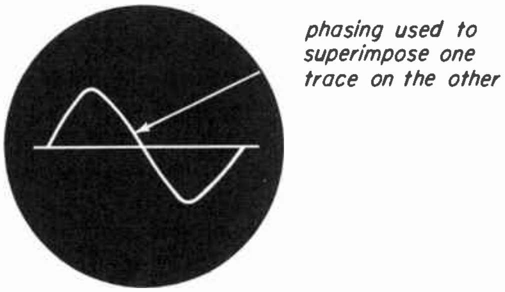

(b) phasing

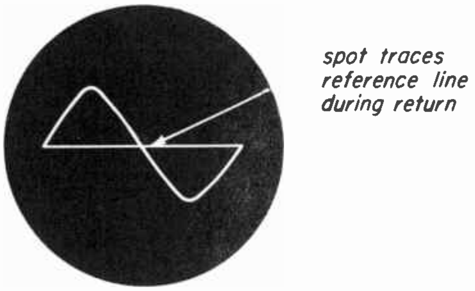

(c) blanking

Fig. 41-22

The final requirement — and an important one — is that the output of the sweep should be arranged so that it can be used single-ended for i-f and sound alignment, or balanced for r-f alignment.

The Marker Oscillator. — A marker oscillator is simply an accurate signal generator used to put a "mark" on the response curve at any desired frequency.

For example, when only a sweep and a scope are connected to the picture i-f section of a television receiver, as shown in Fig. 41-19, only the bare curve is seen on the scope. It may appear to have the correct shape, but there is nothing to indicate where the picture carrier falls.

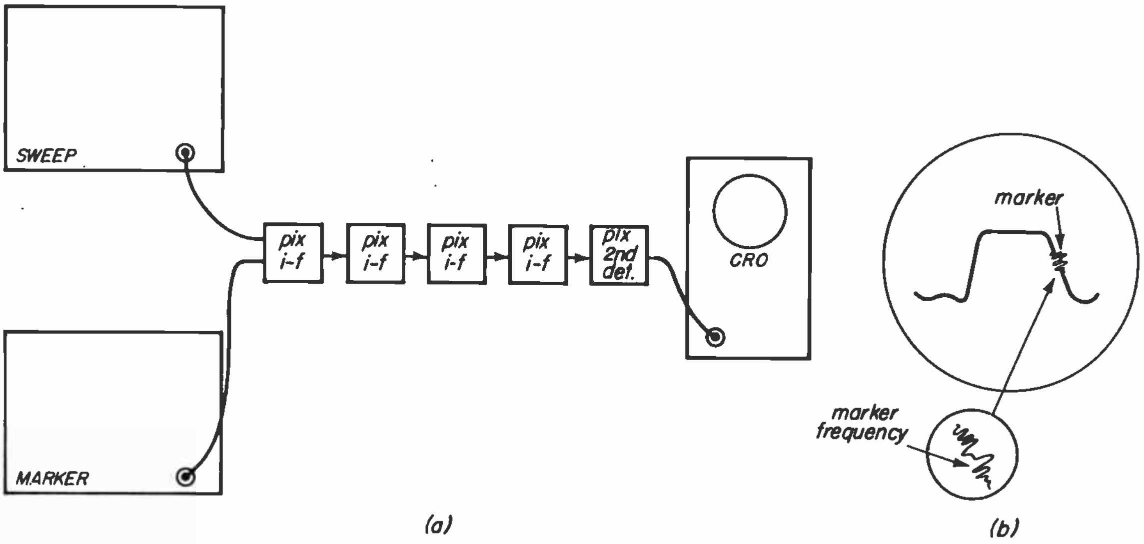

Fig. 41-23

Thus the alignment may be seriously off, the traps incorrectly tuned, etc. While we know that the whole response curve covers a certain band of frequencies, we cannot be certain just where a particular frequency is.

By coupling a marker oscillator into the circuits, as shown at *a* of Fig. 41-23, we can insert a signal at any frequency. When the sweep frequency passes through the marker frequency, a zero beat is produced, and shows up as a mark on the response curve. This is illustrated at *b*. The actual marker frequency is the point where the "break" occurs in the marker pip: the zero beat. On scopes with good high-frequency response, the beat or mark may be much wider than this, making it difficult to read the curve. When this happens, resistance in series with the scope input lead, or capacitance across it, must be used.

If the marker oscillator of Fig. 41-23 is set at 25.75 mc, the mark appears on the curve at the point corresponding to that frequency. Since that is the picture carrier i-f, a glance at the curve indicates whether or not the picture i-f stages are aligned so that the carrier falls at 50 percent, where it should normally be.

We can also determine the frequency of any point on the curve by tuning the marker oscillator until the mark moves to that point. Then we read the dial of the marker unit to determine the frequency of the point. By tuning the marker over the band that the sweep is operating in, we can move the mark from one end of the curve to the other.

The marker is also very useful for tuning traps, and when 400-cycle amplitude modulation is used it offers an easy means of finding the center frequency of the discriminator response.

The most important requirement of the marker oscillator is good accuracy. This is not easy to obtain, particularly at the high r-f frequencies; careful calibration is necessary to insure that the marker signal falls exactly on the required sound and picture carrier frequencies.

The frequency range covered by the marker must include both the i-f and r-f ranges, and usually goes somewhat above the sound-carrier frequency (215.75 mc). Some markers also extend below the 20-mc i-f range.

The marker should have good dial spread, or a vernier arrangement which will give easy-reading separation between 1/4-mc points at the highest frequencies.

There should be either a 400-cycle built-in modulator or provision for external amplitude modulation of the marker signal, for checking discriminator response. The marker oscillator must always be allowed to warm up for fifteen minutes before it is used.

The Voltmeter. – Any reasonably accurate voltmeter may be used in TV alignment, but the vacuum-tube type is most practical, because it causes less loading of the circuits, and because it often has a center-zero arrangement. The following discussion refers to the meter as the VTVM, but any high-impedance meter can be used.

The Bias Box. – A bias box is necessary, to provide a means of overcoming AGC action during alignment and to prevent variation of the response curves, which might occur if the bias varied. It simply provides a fixed bias in place of the normal AGC bias. Its construction and use have been covered in previous lessons.

READING TV RECEIVER RESPONSE CURVES

41-5. Having seen what response curves are and how they are reproduced on the scope for visual alignment purposes, it's time to examine typical curves for various parts of the television receiver. Several questions must be answered, such as:

> How much can we vary from the typical curve and still have good alignment?
>
> What effect do poor curves have on picture quality?
>
> How do we get the typical picture i-f response from a group of circuits tuned to different frequencies?

The R-f Response Curve. – In order to see the r-f response curve, we connect the sweep generator to the antenna terminals (through a matching pad, if necessary) and *loosely* couple the marker output to the same terminals. The scope is connected to the converter grid circuit. This arrangement is shown in Fig. 41-24*a*.

The r-f response curves are usually a set of compromises, since the setting of the high-frequency channels normally affects the low-frequency channels. The picture and sound carriers (which we locate by setting the marker first to one and then the other) fall at the peaks of the curve, and these peaks are the same height. The valley or dip between the peaks is shallow. The curve is symmetrical, and the bandwidth at the 70-percent points is the full 6 mc required to pass the channel. (Remember that the curve may be reversed or upside down on the scope.)

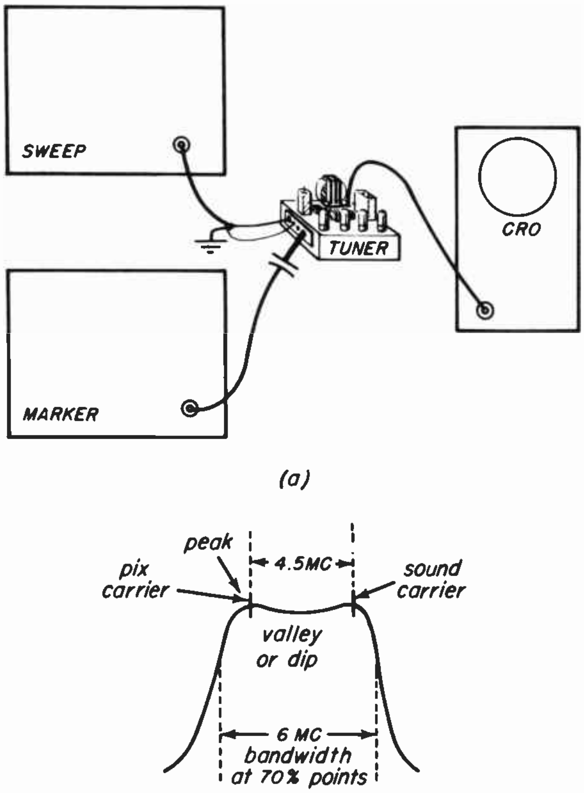

(a)

(b) r-f response

Fig. 41-24

Not all r-f response curves will look like this one; even the curves for other channels on the same tuner will be different. And if we used different test equipment on the same tuner, there might be variation in the curve. Manufacturers' literature on a particular model gives the proper response curves, and the service data should always be used as a guide.

Figure 41-25 illustrates a typical set of r-f curves, taken from the service data on the RCA KRK-5 tuner. Note the differences in Channels 3, 6, and 12, and how the carriers fall on the shoulders of the curves on Channels 7 and 13. One reason why great accuracy is not required in shaping the r-f curves is that the compensation for vestigial sideband transmission is not made until the signal reaches the i-f stages. The most important factors in the r-f curves are band-

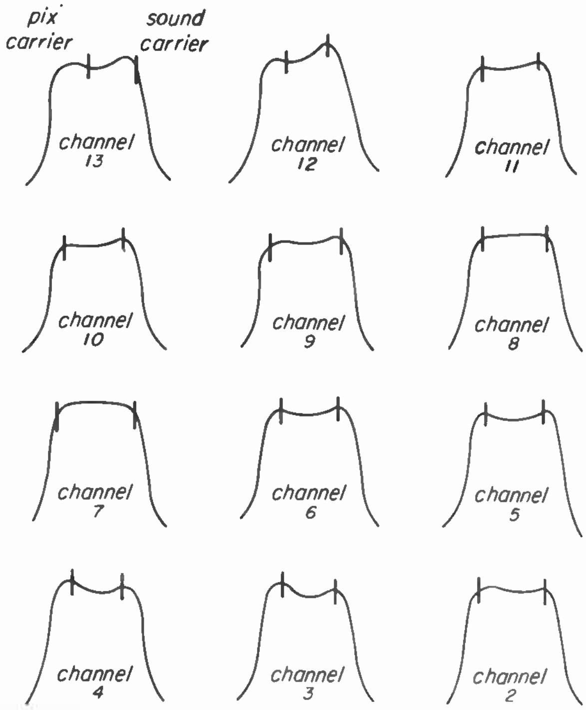

Fig. 41-25

width and uniform (flat) response at all frequencies in the channel.

In spite of these normal variations in curves, certain definite limits must be met by all the curves. These are illustrated in Fig. 41-26. In general, the valley should not drop more than 30 percent below the peaks of the curves, and on "flat-topped" curves (dashed lines in the diagram) the shoulder should not be more than 30 percent down – less in some cases, as specified by the manufacturer.

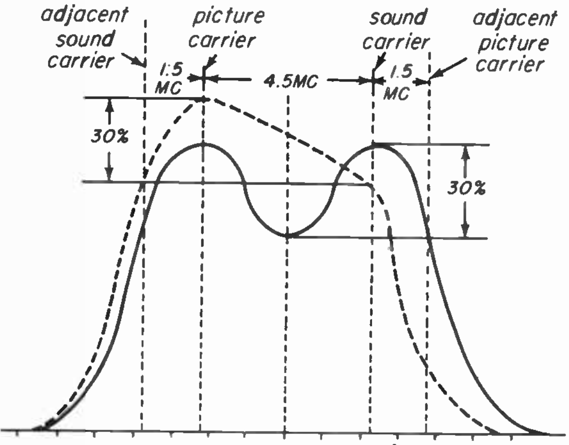

Fig. 41-26

Ordinarily, the picture and sound carriers should be located on the peaks or on the flat portion. If the bandwidth is somewhat narrow, the carriers may fall near the top of the slope (as shown by the dashed lines in Fig. 41-24), but the service data usually states that they must never be lower than 70 percent on the slope.

The slopes of the r-f response curve usually run over into both adjacent channels. A certain amount of overlap is normal, to keep the top portion broad enough to hold both carriers, but if the skirts (lower portions) are too wide, considerable gain may be lost.

The low video frequencies are represented by the region around the picture carrier, while the highs are nearer the sound carrier. Therefore, in cases of misalignment when the curve is tilted more than normal with the picture carrier down, the low video frequencies will be attenuated. A test pattern on the kinescope with this condition will show weak horizontal wedges, poor blacks and whites, and, if the tilt is serious enough, a trailing reversal (white following every black) and loss of sync. Figure 41-27*a* shows how this pattern will look.

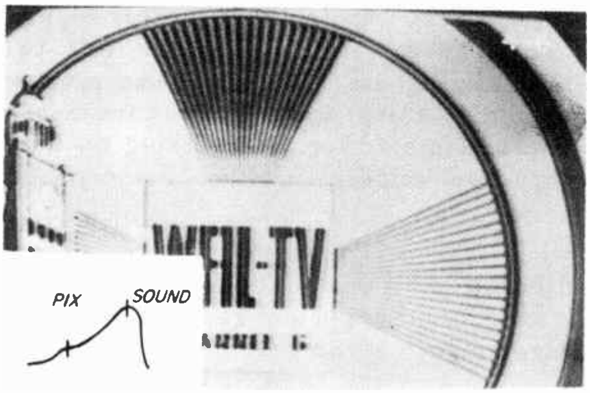

Fig. 41-27 (a)

The opposite condition – the r-f curve tilted with the sound carrier down – is illustrated in *b* of the diagram. In this case, the high video frequencies are attenuated, and the test pattern shows poor resolution and weak vertical wedges.

When a curve is outside the specified limits, it is a good idea first to check all

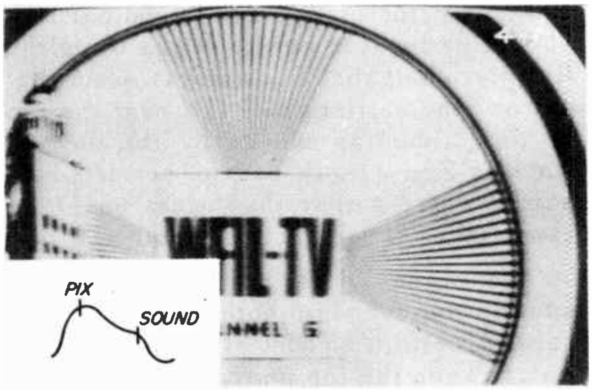

Fig. 41-27 (b)

the other channels. If the other channels show none or only a trace of the same fault, the bad one probably is a "compromise curve", so aligned to get better results on adjacent channels. Naturally, we are most interested in good curves on the channels in use in our area, and poor alignment on an unoccupied channel is of little importance.

Each adjustment made on the tuner produces an important change in the curve. In most cases, it has secondary effects as well. For instance, an adjustment for gain may affect bandwidth, tilt, and frequency, which must then be touched up for the best compromise. For this reason, experienced servicemen often use two neutralizing sticks at the same time on a pair of adjustments which have considerable interaction. By working on both, they can quickly find the best settings.

The average r-f tuner is well aligned when it comes from the factory, and ordinarily will not go badly out of alignment. Sometimes minor touching up is indicated, to get the best possible results. When this is the case, it usually doesn't matter in what order the adjustments are made. If a complete realignment must be performed, however, the procedure recommended by the manufacturer should be followed.

The Picture I-f Response Curve. – The sweep and marker signals are coupled to the input of the picture i-f (or, in some sets, to the grid of the mixer) and the scope is connected to the load resistor of the picture 2nd detector. The arrangement is the same as that shown in Fig. 41-23.

The "ideal" picture i-f response curve is shown at the top of Fig. 41-28. This curve is for a receiver employing a picture intermediate frequency of 25.75 mc, and it is important that the picture carrier, traps, etc., fall at the correct points on the curve.

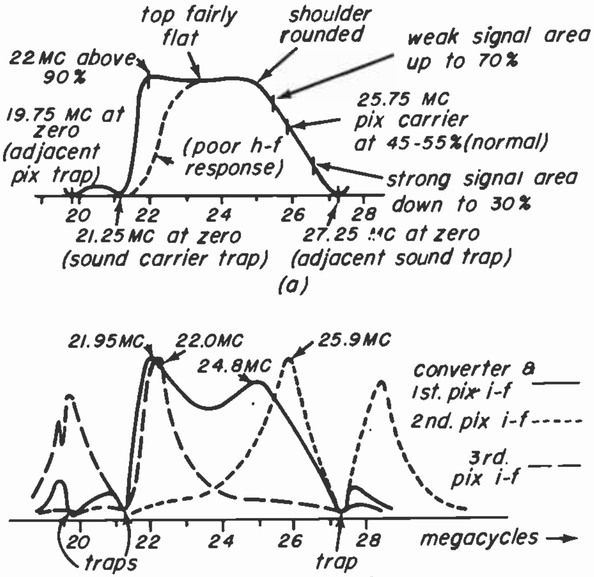

Response of Transformers

(b)

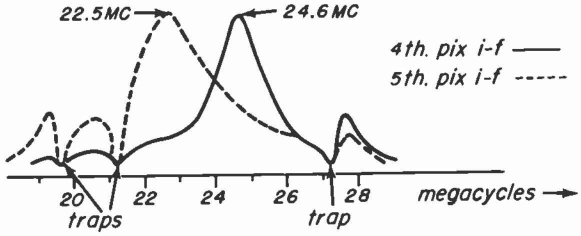

Response of Transformers

(c)

Fig. 41-28

The picture carrier should normally fall at about 50 percent on the slope, except when the set is used in a very weak or very strong signal area. In fringe areas, the carrier may be located up around 70 percent to improve the sync. Also, the carrier may be pulled down around 30 percent without losing sync. If the carrier is too low, low-frequency response is lost, resulting in poor blacks and whites, with possible loss of sync and poor blanking. This gives the effect shown in the test pattern at *a* in Fig. 41-27. If the carrier is too high on the slope, detail is lost in the picture, as in the test pattern at *b* of Fig. 41-27.

The effect of varying the fine-tuning control is to slide the picture carrier up and down the slope, since it varies the intermediate frequency to which the r-f carrier is converted. The shape of the response curve does not change, since it is determined by the setting of the i-f coils, and is not affected by the frequency produced in the converter. In receivers using separate-sound systems, but not in those using intercarrier systems, there is an apparent tracking difficulty between picture and sound *on weak signals only.* The best sound signal is obtained, as usual, near the center of travel of the fine-tuning control. Upon tuning away from this position, however, the picture brightness and strength may double, but the sound disappears entirely.

This condition is normal with weak signals. The fine-tuning control varies the r-f oscillator frequency and moves the i-f picture carrier higher on the slope. This gives higher gain to the low video frequencies, at the expense of the highs, and makes the weak signal appear much stronger and less snowy. At the same time, however, detuning the r-f oscillator moves the sound i-f carrier out of the discriminator response band, resulting in weak or distorted sound or no sound at all. On strong signals, detuning the oscillator in this way causes a noticeable loss of detail. Thus, when a strong signal is being received, the best picture coincides with the best sound.

The sound i-f carrier must be effectively at zero on the over-all response curve for practical purposes. If the sound carrier is not at zero – because traps are misaligned, for example – sound will appear in the picture. In most receivers, additional traps are included to reject the picture carrier of the adjacent (higher) channel and the sound carrier of the next lower channel. In metropolitan areas, these two traps are not too important, but between cities – between New York and Philadelphia, for instance – where it is possible to receive signals on adjacent channels, these traps are very necessary to prevent interference.

The top of the response curve should be reasonably flat, the picture carrier slope gradual and not too steep. The slope at the opposite side, which represents the high video frequencies, should rise abruptly from the region of the sound carrier trap, and the 22-mc marker should be at or above 90 percent on this slope for the best high-frequency response and definition in the picture. The dashed line of Fig. 41-28*a* indicates the characteristic shape of the curve for a set with less high-frequency response and a passband of about 3 mc.

Picture i-f amplifiers may use stagger-tuned stages, overcoupled or undercoupled transformers or networks. Stagger-tuning consists of peaking each of four or five i-f transformers at a different frequency. Overcoupled transformers produce double-peak responses, while undercoupling gives a single peak. Regardless of what method or combination is used, the picture i-f response curve is produced by combining all the individual curves, including the effects of the traps.

The two lower drawings of Fig. 41-28 show the individual response curves for each of five i-f transformers employed in a stagger-tuned RCA i-f amplifier. The converter –1st picture i-f transformer is overcoupled, as can be seen by the double-peaked curve. (The twin peaks in the other curves are caused by the traps, which cut the curves in two.) The curves are presented in two drawings for the sake of clarity, and are not in scale so far as stage gain is concerned, but comparison of these drawings with the over-all response curve at the top demonstrates how the peaks and slopes add or combine to form the characteristic curve.

From this set of curves, we can see how each transformer adjustment and trap setting affects the response curve. The converter–1st i-f transformer has the greatest effect on the degree of slope and the location of the upper shoulder, while the 2nd picture i-f transformer is the principal adjustment for the placement of the picture carrier. The opposite slope of the curve and the 22-mc marker are set by the 3rd picture i-f transformer. The 4th and 5th picture i-f transformers adjust the flatness of the top and the tilt of the curve, respectively. If any one of these adjustments is incorrectly set, the corresponding part of the response curve will show poor shape or location.

A glance at the individual curves shows also that the traps must be set to the proper frequencies; otherwise the entire curve will be thrown off. The traps help to determine bandwidth as well as the curve outline and location in the channel. Improper adjustment can injure both high- and low-frequency response.

Anything which changes the shape of the picture i-f curve or the location of the picture carrier and traps results in trouble, with poor picture quality showing up first, often followed by sync instability, unsatisfactory blanking, interference, snow, and regeneration. Remember: bad i-f or r-f response can be caused by a number of factors other than misalignment.

As a simple experiment to show what effects incorrect alignment can produce, connect the scope, marker, and sweep to show the picture i-f response curve. Set the marker at 25.75; the i-f picture carrier frequency. If a test pattern is available, tune it in. Otherwise, try to get a picture with strong blacks and whites. Now begin detuning the 27.25-mc trap, moving it toward the picture carrier.

Notice how the blacks in the kinescope picture tend to lose their solid color and begin to smear. As the picture carrier continues to move down the slope, the test pattern gets worse, and a point is reached where the picture falls out of sync. If the trap is tuned past the carrier, the pattern begins to lose detail, as the high-frequency response also goes bad, and it becomes more difficult to keep the picture in sync. Figure 41-29 illustrates two locations of the trap frequency and the resultant test patterns. Sometimes misalignment can be corrected by simply retuning a trap that is cutting into the response curve.

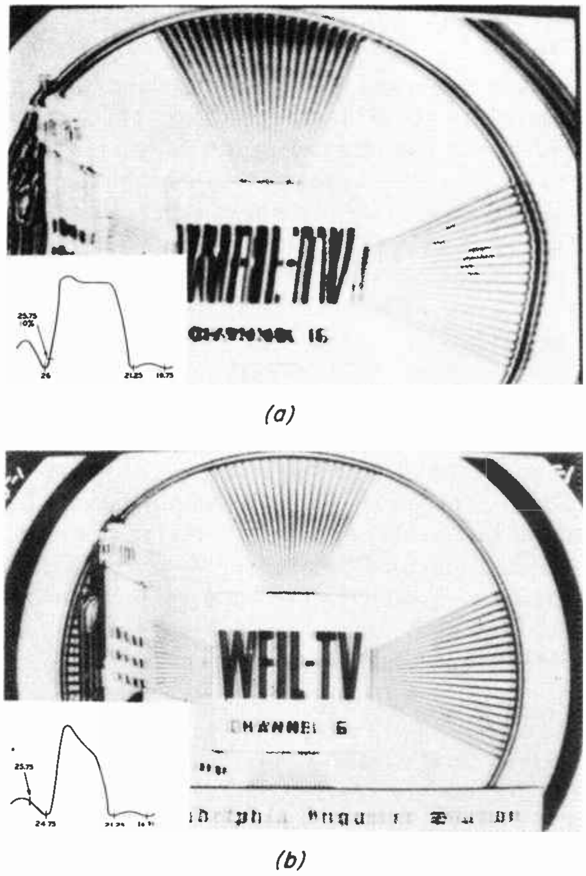

(a)

(b)

Fig. 41-29

The effect of locating the picture carrier on the peak of the curve, at 100 percent, is shown in Fig. 41-30. This increases the gain of the lower frequencies to an excessive degree, as shown by the fact that the horizontal wedge is stronger than the vertical. The loss of highs spoils the detail and contributes to the smear trailing the letters. Note that the response curve has a fairly good shape, except that the slope is too steep.

Narrow bandwidth, with the curve cut off at about 3 mc, gives the test pattern of Fig. 41-31. The curve drops sharply to zero at 23 mc, causing a hump and tilting the curve. The vertical wedge lines are

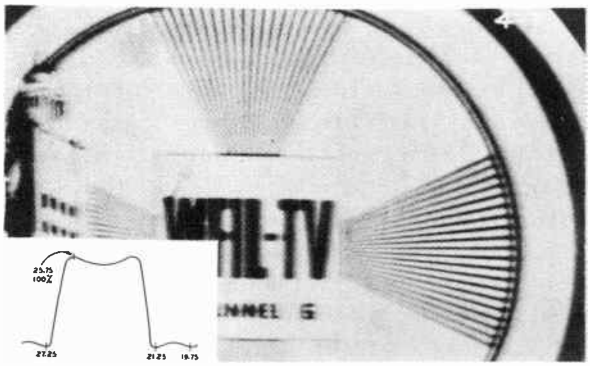

Fig. 41-30

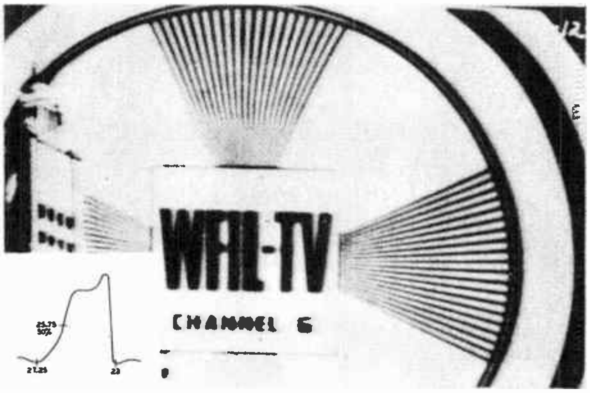

Fig. 41-31

terminated at about 3 mc, and the letters are not clean-cut, especially on the trailing edges.

A more pronounced case of narrow bandwidth appears in Fig. 41-32. Here the vertical wedge is much weaker, and the lines are clear only a little beyond 2 mc, which represents 150-line resolution. The small letters in particular are quite blurred. The response curve is now single-peaked with the carrier at 50 percent. The high-frequency response is worse because the curve slopes off gradually on that side, in contrast to the sharp ascent shown in Fig. 41-31.

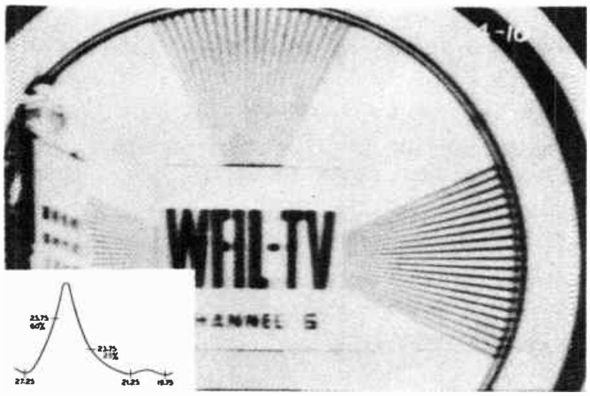

Fig. 41-32

The preceding pictures and curves are typical of difficulties due to misalignment. Analysis of the test pattern will help indicate the trouble. If you know the effect each stage has on the over-all curve, as illustrated in Fig. 41-28, you'll quickly be able to locate the faulty stage. This applies to component failures as well. When you encounter an obscure trouble which seems to be located in the r-f, i-f, or sound stages, it takes only three or four minutes to hook up the alignment equipment and look at the over-all curve.

The Over-all R-f and I-f Response Curve. – This is actually the picture i-f response curve as seen on the scope. The shape, amplitude, and other details are exactly the same as described above, but it is produced by connecting the sweep generator to the antenna terminals and feeding in an r-f signal for the channel to be checked. This signal goes through the r-f section first, forming the r-f response curve. The scope, however, is connected to the picture 2nd detector, so the signal must continue through the i-f stages before we see it. These stages shape it into the picture i-f response curve.

We connect the marker generator to the grid of the first picture i-f tube, and set it to the i-f frequency we wish to mark. The mark remains in the same place on the curve when the channel is changed. This method is usually used to check the picture i-f curve because it's easier to connect the sweep to the antenna terminals than to get into the first i-f stage. It is a quick check of the i-f and r-f response.

The r-f sound carrier is frequency modulated with a maximum deviation of plus or minus 25 kc, giving 100-percent modulation (as opposed to regular FM sound, which has a deviation of plus or minus 75 kc for 100-percent modulation). The r-f sound carrier is 4.5 mc above the r-f picture carrier, but after conversion the i-f sound carrier is below the i-f picture carrier, since the oscillator is above both carriers in frequency.

In separate-sound receivers, the i-f sound signal may be taken off at the input of the first picture i-f stage or it may be amplified in two or three of the picture i-f stages before being taken off. In either case, it is then fed through one or more stages of sound i-f amplification and into a discriminator or ratio detector, which is followed by the usual audio amplifier.

In receivers using the intercarrier system, the i-f sound carrier goes through all the picture i-f stages at the sound intermediate frequency. In the picture 2nd detector, the sound i-f signal is permitted to beat against the picture i-f signal, producing a 2nd sound i-f of 4.5 mc (the difference in frequency between the carriers, which is accurately established at the transmitter). The 4.5-mc sound signal is taken off at the output of the picture 2nd detector and sent to the sound channel, where it is amplified before being fed into the ratio detector.

In intercarrier receivers the sound i-f stages are tuned to 4.5 mc. In split-sound receivers the sound i-f stages are tuned to one of the standard sound i-f frequencies (21.25 mc or 41.25 mc).

We can look at the sound i-f response curve by connecting the sweep and marker at the input to the first sound i-f stage. The CRO is connected across the grid of the last i-f amplifier. At this point is a rectified d-c voltage proportional to the strength of the sound i-f signal. Rectification occurs because the stage is biased to cause current to flow from cathode to control grid.

Figure 41-33 shows the normal sound i-f response curve. This may vary somewhat, depending upon the type of coupling used between stages. The bandwidth between the 70-percent points should be about 200 kc, the curve should be symmetrical about the center (sound carrier) frequency, and should have good amplitude.

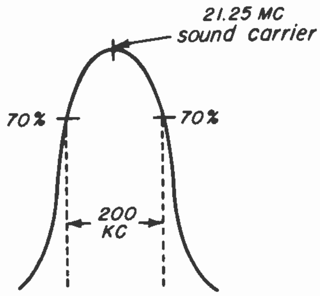

Fig. 41-33

The bandwidth of the sound signal itself is only 50 kc maximum, but the 200-kc passband is provided to allow for frequency drift of the r-f oscillator. If this allowance were not made, the sound might be cut off by normal oscillator drift.

The Discriminator Response Curve. – An input i-f signal at the exact center frequency of the discriminator produces zero output. Even if this steady input signal is amplitude modulated, the amplitude variations cancel and the audio output is zero. The d-c output voltage is also zero when an i-f signal at the exact center frequency is fed in.

But if the *frequency* of the signal changes, either a positive or a negative d-c voltage will appear at the output of the discriminator. The voltage will remain steady as long as the signal maintains its frequency. The output voltage will have one polarity if the input frequency is above the center frequency, and the opposite polarity if it is below. For instance, if the center frequency is 21.25 mc (the sound i-f), the output may be positive for a frequency of 21.245 mc and negative for a frequency of 21.255 mc. If we vary the input signal from one frequency to the other, the discriminator output voltage goes from positive to negative and back, passing through zero at the center frequency. The result is an a-c audio voltage, as illustrated in Fig. 41-34.

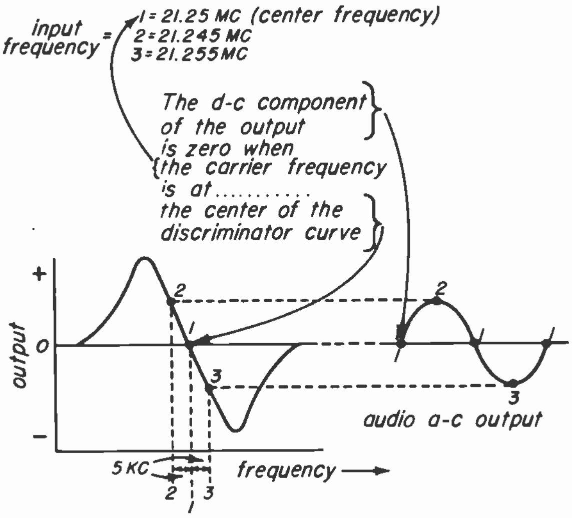

Fig. 41-34

If the signal varies by only a few kc, the output voltage is fairly weak. A variation of 25 kc on each side of the center frequency gives 100-percent modulation and the strongest possible audio and d-c output from the discriminator.

The frequency of the FM TV sound signal is varied according to the audio information to be transmitted. Therefore, the discriminator output is an a-c audio voltage. If the discriminator is not zeroed at the i-f carrier frequency, there is also positive or negative d-c in the output.

Amplitude modulation cancels out if the signal is at the center frequency. But if the signal is at any other frequency, the AM does *not* entirely cancel, and some of it appears at the output of the discriminator. When the input signal is at either peak of the response curve, the maximum amount of AM gets through. Even at the center frequency, some of it will get through if the center portion of the discriminator curve is not linear; that is if there are kinks or bends in the curve.

We can look at the discriminator curve by connecting the oscilloscope to the output (ungrounded) cathode of the discriminator tube and coupling the sweep and marker to the grid of the second or third sound i-f tube. This arrangement is shown in Fig. 41-35*a*.

The "ideal" discriminator response curve is shown at *b* of the figure. There are three features of importance about this curve.

1. The curve must be linear (straight-line) for at least 25 kc on each side of the center frequency, and preferably over the whole slope. The small curve at *c* illustrates non-linearity — this curve would result in distortion in the sound and AM noise.

2. The center of the slope should fall at the sound i-f. Curves *d* and *e* show lack of symmetry, with the sound i-f too high and too low on the slope.

3. Finally, the bandwidth between the peaks of the curve should be not less than about 250 kc. In some separate-sound sets, it may be around 500 kc,

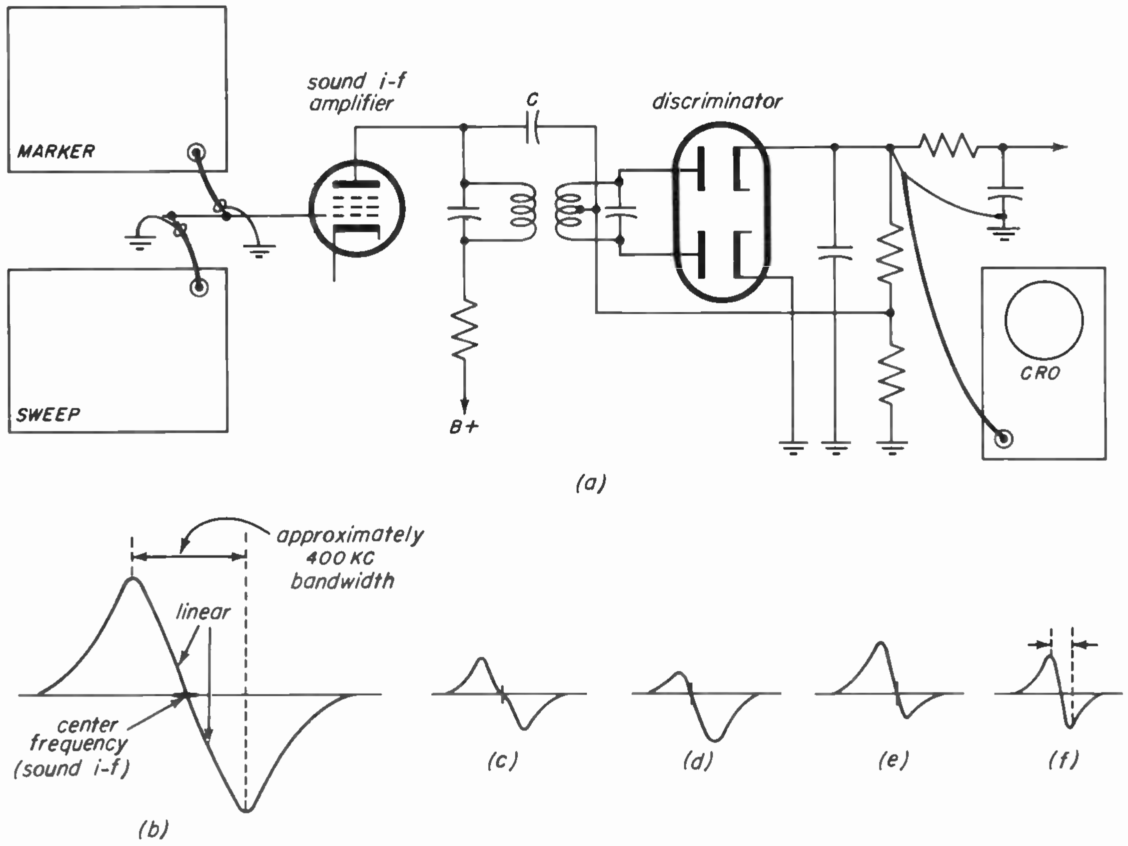

Fig. 41-35

while in most intercarrier models it is about 400 kc. This should always be checked in the manufacturer's data. Too narrow a bandwidth is shown in curve *f*; the result is that normal drift of the r-f oscillator may cause a loss of sound, as mentioned before. If the fine-tuning control is used to bring it back, the picture quality may be quite bad at the point where the sound re-appears. This may be perfectly normal on *weak signals*, so don't be deceived by it. If it happens on fairly strong signals, however, and the picture quality is noticeably poor at the best sound setting, it's a good idea to check the discriminator center frequency and bandwidth as well as the r-f oscillator frequencies.

The response curve for a ratio detector is usually the same as that of the discriminator, although in some circuits the high- and low-frequency slopes may be quite steep, dropping sharply to zero just beyond the peaks.

Abnormal Discriminator Response. – With an input signal at the frequency of the sound i-f carrier, a properly aligned discriminator response appears like that of Fig. 41-36*a*. The carrier frequency signal beats with the output of the sweep generator to place a mark at the point where the sweep frequency passes the fixed carrier frequency. When the discriminator is aligned correctly the sound i-f carrier mark is in the center of the slope. The output at this frequency is zero audio and zero d-c, and the output increases by equal amounts for frequencies above and below the carrier. The scope zero reference trace (present with blanked sine-wave sweep) passes through the response at the frequency of zero output. With proper alignment this is the sound i-f carrier frequency.

Figure 41-36*b* shows the response with the input signal unchanged but with the secondary coil tuned to a new frequency above the carrier frequency. The reference trace now crosses the curve at the new frequency to which the secondary is tuned. The carrier mark is at a point where the output is not zero. Figure 41-36*c* shows a similar condition with the secondary tuned below the carrier frequency.

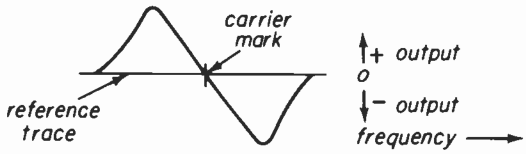

(a) Properly aligned discriminator

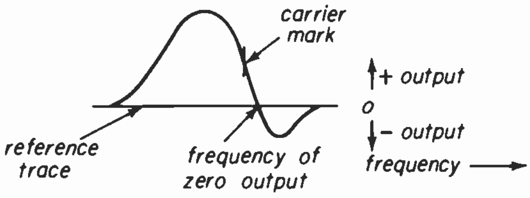

(b) Secondary tuned above carrier frequency

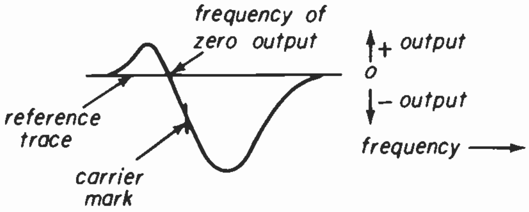

(c) Secondary tuned below carrier frequency

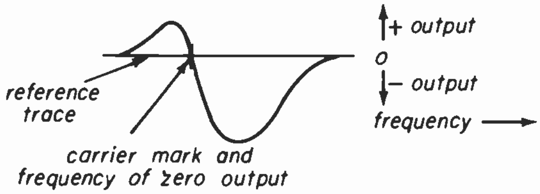

(d) Primary tuned above carrier frequency

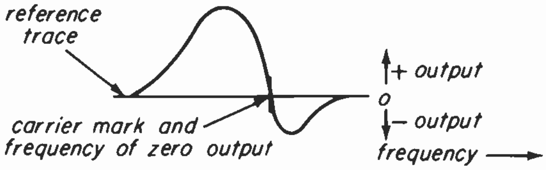

(e) Primary tuned below carrier frequency

Fig. 41-36

We can conclude that the tuning of the secondary determines the frequency at which the output will be zero. For proper alignment the secondary should be tuned to the carrier frequency. Note that in this instance of misalignment (Fig. 41-36*c*) the output at the carrier frequency is not zero, and the output is not equal above and below the zero frequency. The output is *nearly* but not *exactly* equal above and below the carrier mark. The output can only be equalized exactly above and below a zero output frequency. To do this, both primary and secondary must be tuned to the same frequency. In Fig. 41-36*c* the output is not equal around the zero frequency because the primary is tuned to a different frequency than the secondary. The zero output frequency is different from the carrier frequency because the secondary is not tuned to the carrier frequency.

Figure 41-36*d* shows a response with the secondary tuned to the carrier frequency but the primary detuned above the carrier frequency. As in a properly aligned, discriminator, the reference trace crosses the curve at the carrier frequency. The output is, therefore, zero at the carrier frequency. However, the output above and below the carrier-zero frequency is no longer equal. Figure 41-36*e* shows a similar condition with the primary detuned below the carrier frequency. The tuning of the primary makes the output equal above and below the frequency at which the output is zero.

Figure 41-37 shows a response with primary and secondary tuned to different frequencies, neither of which is the carrier frequency.

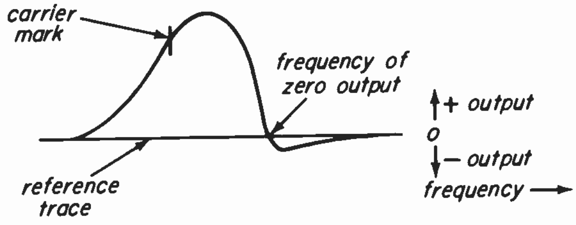

Fig. 41-37

Adjustment of a discriminator with a sweep and marker is done in two steps:

1. Tune the secondary until the carrier mark falls on the curve where it is crossed by the reference trace. The output is then zero at the carrier frequency.

2. Tune the primary until the output is equal above and below this frequency.

It is also possible to tune the primary of a discriminator separately. The response of the primary alone looks like that of Fig. 41-38. This is the same type of response curve produced by a sound i-f amplifier.

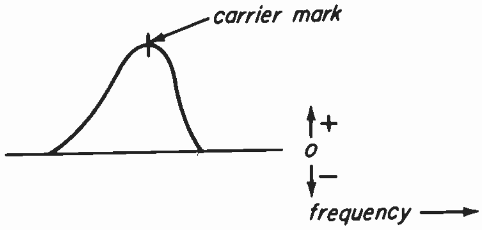

Fig. 41-38

Once the primary is adjusted, the overall discriminator response may look like Fig. 41-36*a*, *b*, or *c*. It could not appear as the curves in *d* or *e* of the figure, which illustrate proper secondary adjustment with improper primary adjustment. If the response curve appears as in *b* or *c* it is necessary to tune the *secondary* until the curve appears as shown at *a* of the figure. If the discriminator is adjusted in this manner it is certain that both primary and secondary are properly aligned.

The response curve may still be abnormal, as shown in Fig. 41-39. Figure 41-39*a* denotes narrow bandwidth, while Fig. 41-39*b* is a curve with a non-linear slope.

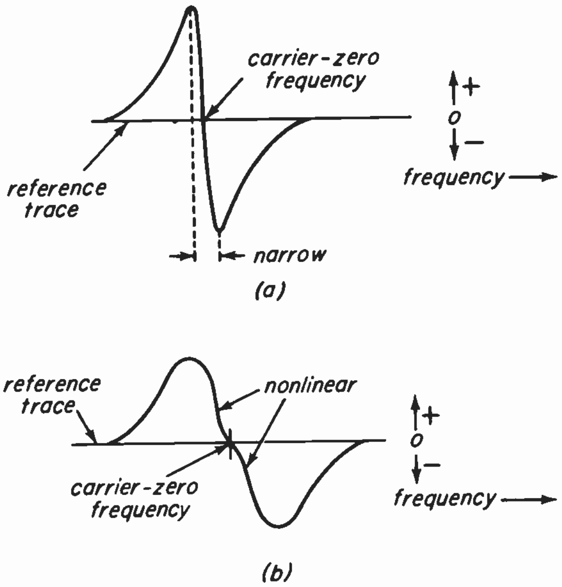

Fig. 41-39

With primary and secondary at the right frequency, the cause of these abnormal curves cannot be detuning. Possible causes are:

1. Incorrect amount of transformer coupling, which is determined by the physical closeness of the primary and secondary coils.

2. Incorrect amount of direct coupling, which is determined by the value of *C* of Fig. 41-35*a*.

3. Incorrect value of *Q* for the tuned circuits.

None of these causes can be corrected by tuning. The responses of Fig. 41-39 indicate a defective discriminator transformer assembly, which must be replaced.

If one of the discriminator diodes is not conducting (as when one of the two internal filaments of a 6AL5 is burned out) the curve will look like that of Fig. 41-40.

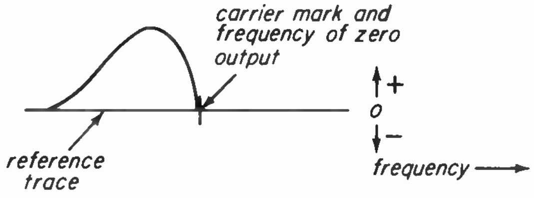

Fig. 41-40

The over-all sound i-f response is obtained by feeding the sweep and marker into the first sound i-f while the CRO is connected to the discriminator output. The proper response is that shown in Fig. 41-36*a*. The response might appear like those of Fig. 41-36*d* or *e* – unbalanced, but with the proper zero frequency. This might be caused by detuning of the discriminator primary, or of any of the sound i-f transformers. In other words, unbalance of the over-all sound i-f response can be due to a detuned discriminator primary or to a detuned i-f transformer. However, the frequency of zero output is determined only by the discriminator secondary tuning.

To tune a discriminator using a meter and the TV station sound, it is necessary to understand how a discriminator responds abnormally to a frequency-modulated carrier. Figure 41-41*a* shows a normal response curve, with the carrier correctly positioned at the zero frequency.

When the carrier is frequency modulated, its frequency swings up and down the slope between A and B. An equal amount of energy is contained in the positive and negative swings. Since the polarities are opposite, the energy averages to zero. The audio output waveform is as shown at *b*. The d-c component is zero, and the d-c meter reads zero.

In split-sound receivers, the sound i-f carrier frequency changes when the fine-tuning control is rotated. The tuning of the discriminator does not change; the carrier frequency fed into it changes. It might move up the slope, as shown in Fig. 41-41*c*. The audio output would then have a positive d-c component as shown in Fig. 41-41*d* and the meter would read this d-c component. The d-c reading becomes more positive as the carrier is shifted up in frequency, and goes negative as the carrier is shifted down in frequency. The carrier is shifted by turning the fine-tuning control. The best picture appears at the correct carrier-frequency setting of the fine-tuning control. If the discriminator had an abnormal response, like that shown in Fig. 41-41*e*, the meter would read a negative d-c voltage at the best picture setting. If the response were as shown in Fig. 41-41*f*, the d-c meter would read zero at the best picture setting of the fine-tuning, but the maximum positive d-c voltage obtained by rotating the fine-tuning control would be greater than the maximum negative d-c voltage.

The Intercarrier I-f Response Curve. – The i-f curve for intercarrier sets is discussed separately because the shape of the curve is slightly different from that of a separate-sound system. The reason for this difference is that, in intercarrier sets, the sound i-f passes through the picture i-f stages and appears at the output of the picture 2nd detector. The scope is connected at this point.

To provide the i-f signal, the sweep and marker may be connected to the converter, the grid of the first i-f stage, or

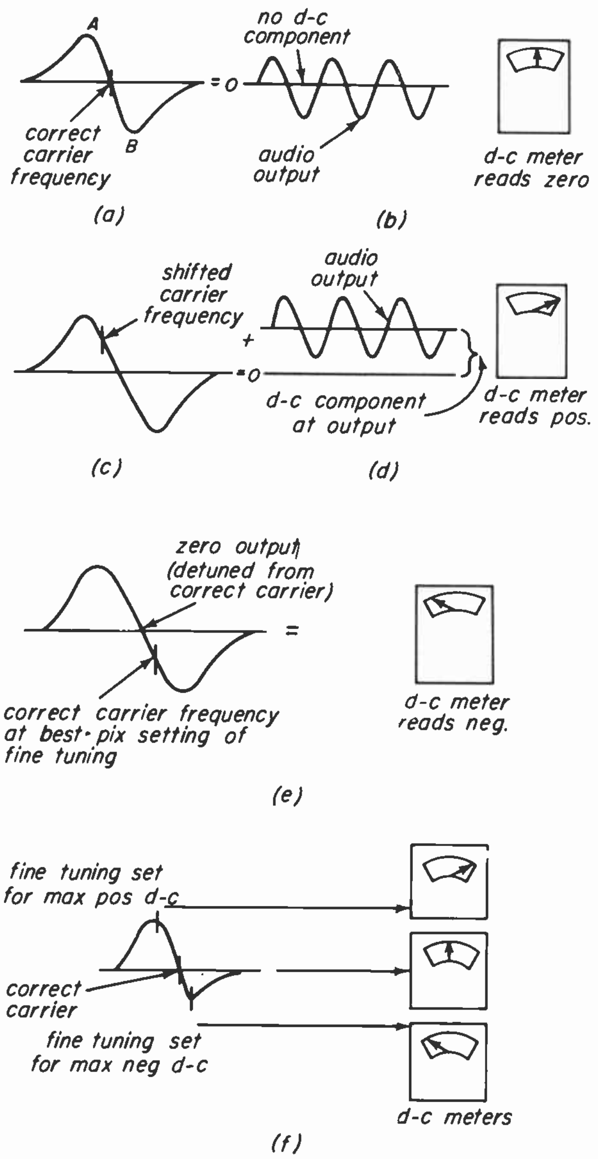

Fig. 41-41

the antenna terminals. The latter gives an over-all r-f and i-f response, but as explained before, the shape on the scope is that of the i-f curve.

Figure 41-42 shows the intercarrier i-f response curve as it should appear on the CRO. The i-f picture carrier appears at about 50 percent on the slope, and the top of the curve is fairly flat, with the general shape shown. The only important difference from the response curve of separate-sound sets is that the response at the i-f sound carrier frequency is not zero. Instead, the sound carrier rides about 5 percent up the slope.

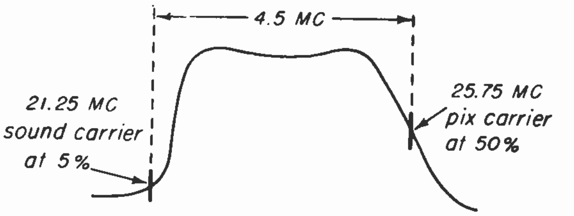

Fig. 41-42

The position of the sound carrier is important and critical. If it goes much above 5 percent, picture buzz may appear in the sound, and possibly sound in the picture as well. If the sound carrier is too low on the slope, the sound may become weak or noisy.

ALIGNMENT PRACTICES

41-6. The alignment procedure for a particular set usually is given in the service data. However, these brief instructions assume that the serviceman is experienced in alignment, and give only directions for connecting equipment and what specific results to look for from each adjustment. This is enough for the experienced serviceman, but the novice may be left with a number of unanswered questions, such as:

Should I use a capacitor, a resistor, or neither in series with the test-equipment cables?

How does the contrast control affect the response curve, and how should it be set during alignment?

The response curve on the CRO is thick and full of "hash" instead of thin and clean – what should I do?

The purpose of this section is to answer these and other common questions, and give a working knowledge of the general factors involved in alignment.

It is always wisest to follow closely the manufacturer's instructions for alignment. As you gain experience, you'll learn short cuts. However, in general it is better to use the service data as a working guide, avoiding short cuts that may result in a half- or poorly-done job.

Order of Alignment. – The order in which the sections of a set are aligned is always specified by the manufacturer. That order should be followed if a *complete* alignment is necessary. The sequence listed below is safe in many cases, however, and can be considered a general sequence.

1. Traps
2. Picture i-f amplifier
3. Sound i-f amplifier
4. Discriminator or ratio detector
5. R-f amplifier and converter
6. Setting of r-f oscillator frequencies (this may precede Step 5)
7. Checking over-all r-f and i-f curve on all channels

Checking Over-all Response. – Many sets need alignment only in one or two sections. Therefore, it's a good idea to check the over-all r-f and i-f response on all channels first.

It takes only a few minutes to set up the equipment for this check, but it may save much time in localizing difficult troubles. A quick look at the over-all curves may eliminate about half the signal sections of the set, and you can begin checking the other sections. If the curves are poor, the trouble is in the r-f or picture i-f amplifier. You can move the scope to the converter (or the sweep and marker to the 1st i-f grid) to eliminate one or the other, then make a stage-by-stage check to find the exact source of the trouble.

Peak and Sweep Alignment. – In sweep alignment, the response curve on the CRO is used as a guide to the proper setting of each adjustment. This is visual alignment, and we must use the sweep generator to produce the response curve. When we change an adjustment, we can watch the corresponding changes in the shape, frequency, and amplitude of the curve.

In peak alignment only a test oscillator and a vacuum-tube voltmeter are required. We make adjustments by setting the oscillator or signal generator to a particular frequency, then adjusting for a maximum or minimum reading on the VTVM. Actually, we are setting the adjustment of a circuit so that it allows a maximum voltage to pass at one particular frequency. The characteristics of the circuit must be such that it offers maximum response only at one frequency – in other words, it must have a single-peak response. We move the curve up or down in frequency until its peak or maximum response is at the desired frequency. The test oscillator provides a signal at the desired frequency, and the VTVM reading indicates when the greatest amount of signal is coming through; Fig. 41-43 illustrates this principle.

When the circuit is detuned so that the response is at the position shown by the dotted curve, the signal from the test oscillator develops the amplitude shown at

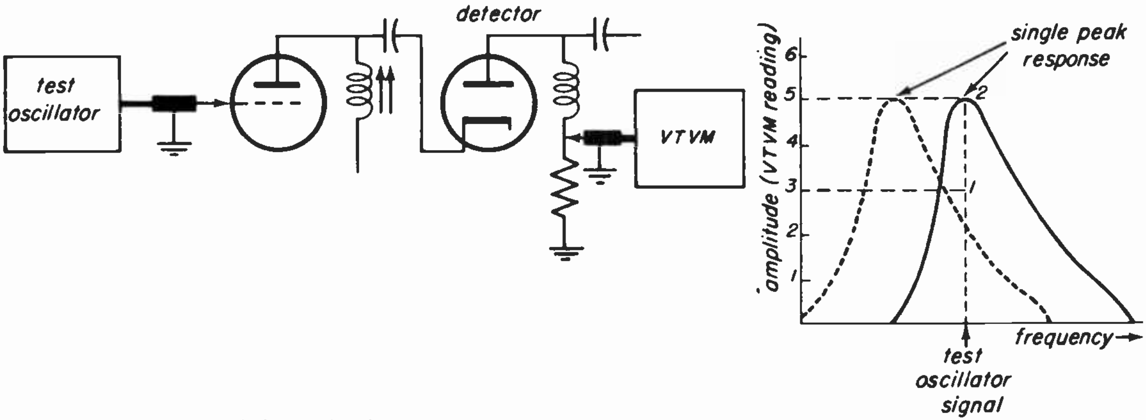

(a) peak alignment

(b)

Fig. 41-43

point 1, and the VTVM reads 3 volts. In adjusting the coil, we move the response to the position shown by the solid curve. The single peak is now at the frequency of the test oscillator, the signal develops maximum voltage across the circuit, and the VTVM reads 5 volts. If we tune the coil still further, the reading on the VTVM drops off rapidly, indicating that we've passed the peak.

Single coils of the type used with stagger-tuned and undercoupled transformers and networks normally have single-peak response, and usually can be peak aligned.

Overcoupled transformers and networks, and double-peak transformers, usually must be sweep aligned. Of course, we can use sweep alignment on any kind of tuned circuit, whether it has single- or double-peak response.

When a single coil is being aligned, it always has the single-peaked response shown at *a* of Fig. 41-44. A transformer may also have a single-peaked response, if both coils tune to the same frequency. This is shown in *b* of Fig. 41-44. Double-peaked transformers have two peaks, at different frequencies. Adjustment of coil A in Fig. 41-44*c* shifts the frequency of peak A; adjustment of coil B shifts the frequency of peak B. Neither peak is extremely pronounced. The output of a voltmeter connected to the output would be the same at frequencies A and B. For this reason, sweep alignment is necessary for double-peaked transformers and networks.

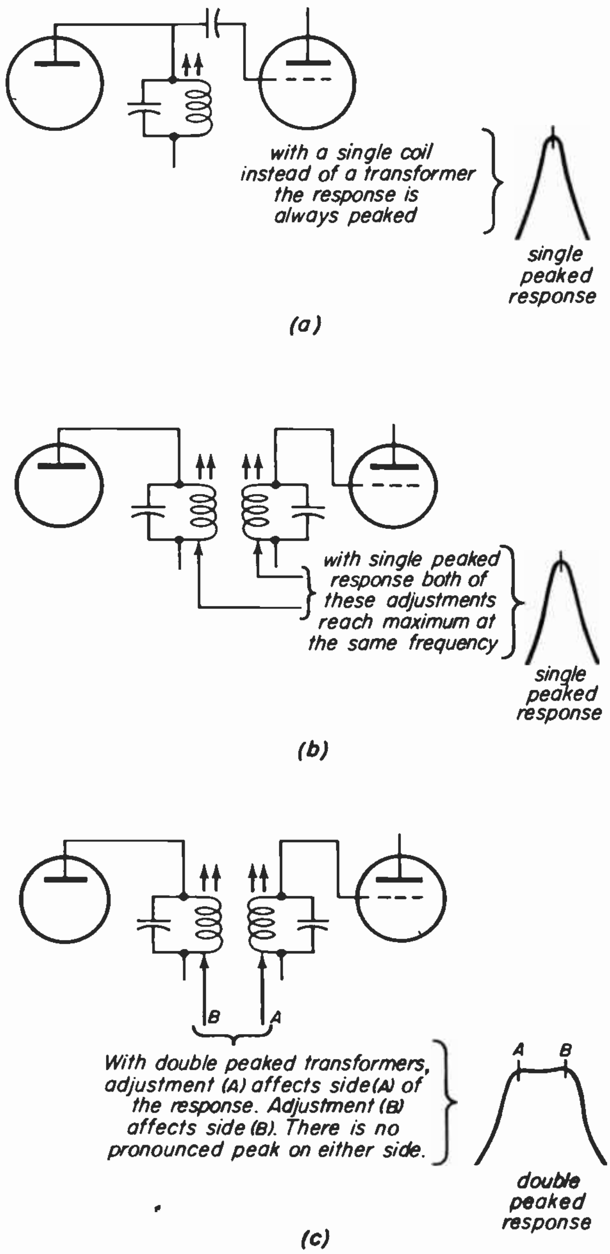

with a single coil instead of a transformer the response is always peaked

with single peaked response both of these adjustments reach maximum at the same frequency

With double peaked transformers, adjustment (A) affects side (A) of the response. Adjustment (B) affects side (B). There is no pronounced peak on either side.

Fig. 41-44

Under one condition, we can peak-align an overcoupled transformer. To do this, the coupling must be cut below unity during alignment. The most convenient method is to load one side of the transformer with shunt resistance and tune the other side to peak at the desired frequency. Figure 41-45 illustrates the procedure. The test oscillator is set to the center frequency of the double-peak response. The shunt resistance lowers the Q of the shunted coil and broadbands it, resulting in an undercoupled condition. The response curve becomes single-peak and we tune the unshunted side for maximum voltage indication on the VTVM at the test oscillator frequency. When both sides have been tuned and the shunt is removed, the response is a correctly aligned double-peak curve.

Since not all double-peak curves are symmetrical, it's necessary to check the service data to find the right frequency setting for the test oscillator.

The value of the detuning resistor is not critical; it may be 1,000 ohms or less in the sound i-f stages.

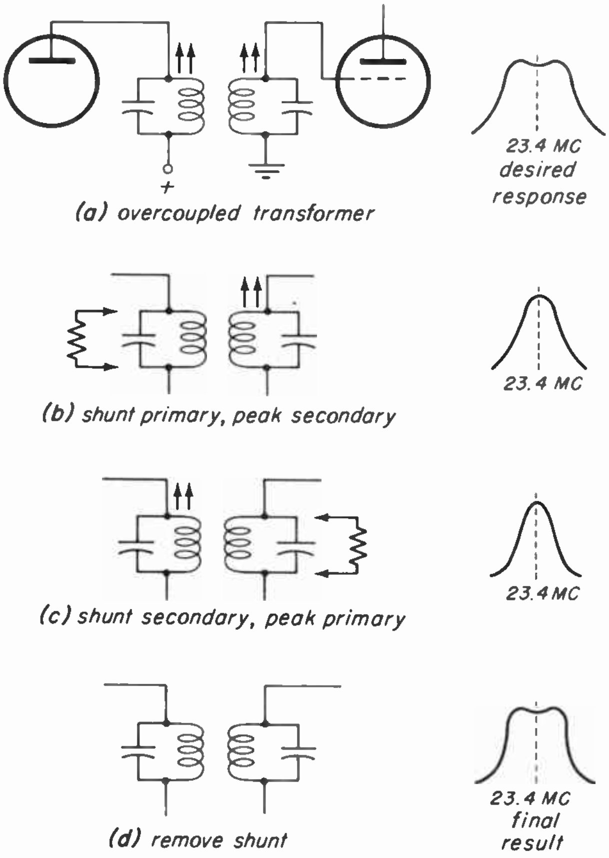

Fig. 41-45

Sweep Connections.— Sweep-generator controls include the output attenuator (which sets the level of the output signal), phasing control, and frequency control. The latter may be a band switch which selects the desired channel and automatically sets the center frequency and the width of the band to be swept, or two separate controls. There may also be controls for blanking, a separate attenuator for the lower frequencies, and others.

The sweep-width control does not vary the width of the presentation on the scope screen, but determines the width of the band of frequencies swept. If it is set for too narrow a band, only a portion of the response curve will appear on the scope, occupying the full width of the screen. The only control which varies the width of the trace is the horizontal-gain control on the scope, but this has no effect on the actual frequencies represented by the curve.

The sweep generator usually feeds a horizontal deflection voltage, rather than a sync signal, to the scope. If deflection voltage is provided, the internal horizontal oscillator of the scope is not used; instead the voltage from the sweep is fed to the scope's horizontal amplifier. The phasing control adjusts the phase of this deflection voltage, affording a single, overlapped pattern on the scope screen.

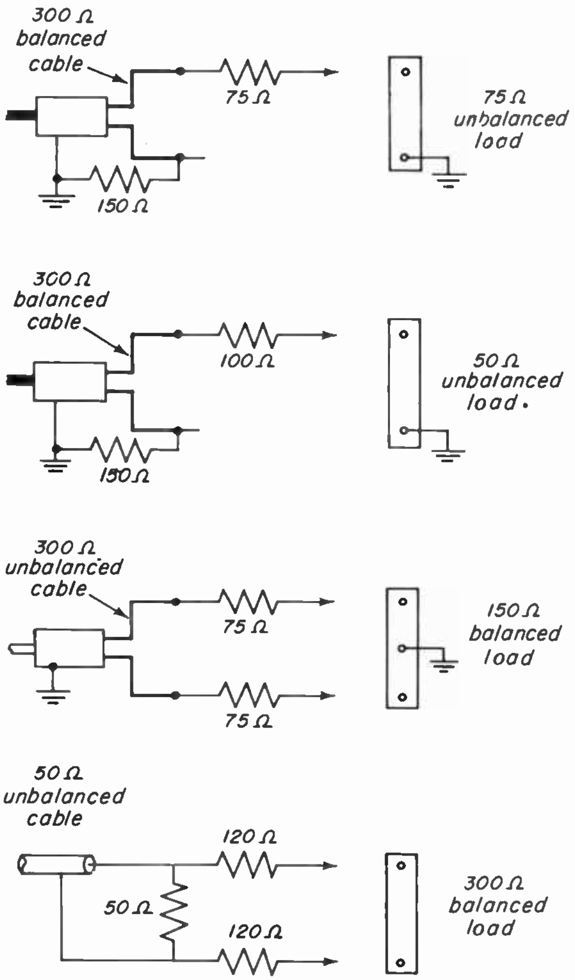

Fig. 41-46

The output cable should provide either push-pull (balanced) or single-ended output, so that either can be used. It should be shielded to within about an inch of the tip. The cable may have any of several common impedances, such as 50- or 72-ohm unbalanced and 300-ohm balanced. The instruction book which comes with the sweep indicates the cable impedance, and methods of matching the impedance to other loads. Figure 41-46 shows sample arrangements which can be used if cable and load agree with any of those in the drawing. The resistors should be non-inductive, not wire-wound.

The sweep may be connected to the: antenna terminals; input to the picture i-f amplifier; input to the sound i-f amplifier.

When connecting the sweep to the antenna terminals, make certain that the output impedance of the sweep cable matches the input impedance of the receiver, as described above. On most receivers this is important, since a mismatch causes detuning of the input network to which it is directly connected.

It's safest to set the receiver gain for normal, disabling the AGC with a bias box, as will be described later. Then turn the vertical gain of the scope near maximum, and increase the sweep attenuator setting from zero until a usable response curve is obtained. If you turn up the sweep output and the response on the scope or VTVM does not increase a like amount, the circuits are overloaded. The curve of an overloaded amplifier may remain flat-topped or it may, as the overload is increased, develop all sorts of dips and peaks which do not appear in the normal response curve. Figure 41-47 shows how the over-all r-f and i-f response of an RCA 630 actually looked on the scope screen when the sweep output voltage was deliberately run considerably past the overloading point.

If you move the sweep cable from one point of connection to another, and the resultant response curve doesn't look normal, decrease the sweep output to see if the condition clears up. If it does, the trouble was overload.

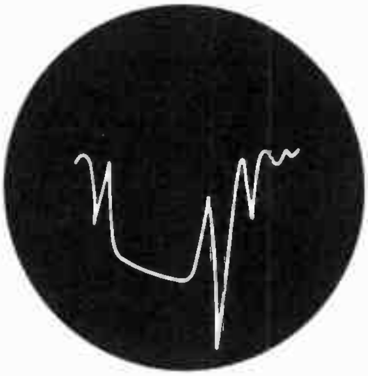

Fig. 41-47

Terminating the I-f Cable. – The i-f cable may or may not have a built-in terminating resistor across the output and ground. This resistor should have a low value, to terminate the cable in its approximate characteristic impedance. 100 ohms is common. If the cable of your sweep generator doesn't have such a resistor, it is a good idea to add one.

The terminating resistor does two things: (1) prevents radiation from the cable by providing the proper termination, and (2) damps the circuit to which it is connected to insure a flat input for all frequencies swept.

In addition, you should connect the cable to the circuit under test through a series capacitor, as indicated in Fig. 41-48, to block d-c from the sweep input.

In the circuit shown in the diagram, the input side contains a tuning coil, L_{in}, which could affect the shape of the

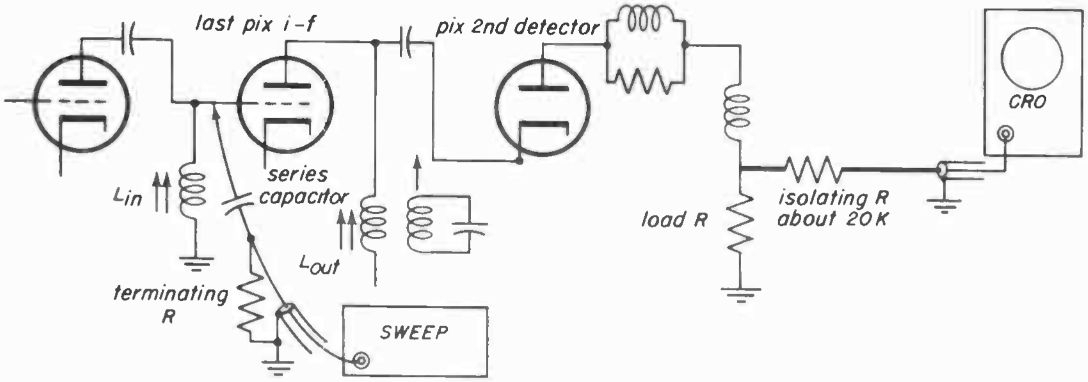

Fig. 41-48

response curve since it lies within the range of frequencies swept by the generator. But we want to see only the curve of the coil in the output circuit, L_{out}. Therefore we use the terminating resistor on the sweep cable. The resistor is effectively in shunt with L_{in}, and damps its response. The cable termination "swamps out" the circuit to which the sweep output is connected, and we get the desired response of the stage or stages following the tube.

The size of the series capacitor depends upon the output frequency of the sweep generator, as follows:

20- to 60-mc i-f: 500 mmf

4.5-mc i-f (intercarrier sound): .005 mf

Video frequencies: .05 mf

A series capacitor should be used for blocking when either the r-f or the i-f cable is connected to a point which carries d-c voltage, such as bias or B-plus.

When it is necessary to terminate the cable of a piece of test equipment in a capacitor or a resistor, it is convenient to use the method shown in Fig. 41-49. Connect the clip on the cable to one lead of the capacitor or resistor, and bend the tip of the other lead into a small U, about 1/8 inch across. This is a convenient means of hooking into tight places, where a clip doesn't fit easily. The weight of the component and the cable dragging on the U-shaped section is usually sufficient to insure adequate contact and good coupling. The leads of the capacitor or resistor should be quite short, both to avoid unwanted coupling and to reduce the danger of shorting against ground or a potential point.

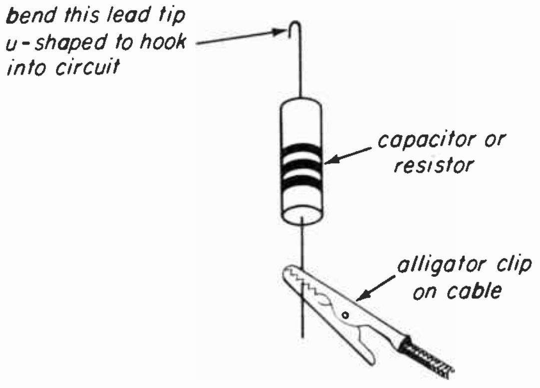

Fig. 41-49

Scope Connections. – Scope controls are well standardized, save for special features on certain models. Two sets of terminals are provided, into which can be fed a horizontal deflection voltage from the sweep and synchronizing voltage. Thus the average scope can be used with any sweep generator, regardless of which synchronizing method is used by the sweep. In many sweep generators, the r-f oscillator is frequency-modulated at the 60-cycle power-line frequency. When such a sweep is used with a scope which provides its own phase-controlled sine-wave sweep voltage (fed internally to the horizontal amplifier), it is not necessary to connect the sync or deflection voltage output of the sweep generator to the terminals of the scope. Simply set the sync selector switch on the scope panel to the power-line position. The sweep generator and the horizontal amplifier of the scope are then both operating at the same frequency, and can be brought into perfect sync by the phasing control on the scope.

If the sweep generator employs any other type of sweep voltage, such as sawtooth, the two units must be connected externally. Make certain the proper terminals are used – don't feed sync voltage to the horizontal input or deflection voltage to the sync terminal. External connections are needed with scopes having an internal sine-wave sweep which is not phase-controlled.

In alignment, we usually connect the scope to some point at which a rectified signal is available. The high-frequency response of commercial scopes is not sufficient to reproduce r-f or i-f on the screen, but the rectified envelope of these amplitude-modulated signals gives us the desired information. The most common points of connection are:

Across the load resistor of the picture 2nd detector.

Across the load resistors of the discriminator.

Across the grid resistor of the last sound i-f (the grid draws current and acts as a diode detector).

Across the grid resistor of the converter.

These are not the only points to which the scope can be connected. By using a crystal detector at the end of the scope cable, we can get a response curve almost anywhere. This is often convenient for troubleshooting purposes.

The manufacturer's service notes tell exactly where and how to connect the scope to see a particular response curve. Sometimes it is necessary to modify a circuit temporarily by adding a resistor or capacitor, or even pulling out a tube, in order to get the proper response. For instance, in some limiter grid circuits, the resistor-capacitor time constant may be large enough to distort the pattern seen on the scope. In this case, either remove the capacitor from the circuit or shunt the resistor with another of approximately the same value. When you finish, remember to restore any temporary changes.

The vertical-gain control of the scope should be kept near maximum at all times. If the response curve becomes too large as the job proceeds, it means you have more stages of amplification between the sweep generator and the scope. Do not reduce the gain of the scope; simply turn down the sweep output attenuator. Make this a routine procedure and you won't be troubled much with overloading. However, if you get a response curve with a nice, flat top and fairly sharp corners, as in Fig. 41-50*a*, be a little suspicious. Such a curve is too nearly perfect, and may be due to mild overloading. Reduce the sweep output to make sure. If the curve doesn't get smaller in amplitude when you begin turning down the sweep attenuator, there is an overload and the flat top was due to clipping in the overloaded amplifiers. The overloaded response of Fig. 41-50*a* might have the shape shown at *b* if it were not clipped.

Terminating the Scope Cable. – The scope input cable should be shielded to prevent pick-up and possible regeneration. There are two basic reasons for using a special termination on the scope cable when it is connected to the load resistors of the discriminator or picture 2nd detector:

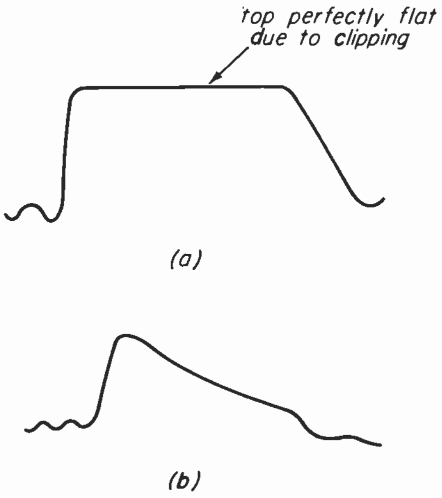

(a)

(b)

Fig. 41-50

1. To keep i-f off the lead (minimize regeneration).

2. To make the marker pip sharper on scopes with good high-frequency response.

In both cases, we can eliminate the higher frequencies by using a shunt capacitor or a series resistor. The capacitor offers a shorting path to ground because of its low reactance at high frequencies, while the resistor simply attenuates the weaker signals. The desired output from the picture 2nd detector is a fairly strong AM signal which is varying at the sweep frequency of 60 cycles, and this is not affected by a capacitor of the proper value.

If the scope has good high-frequency response, the marker pip will appear on the response curve as shown at *a* of Fig. 41-51. The beat frequencies between the sweep frequencies and the marker oscillator actually extend over the entire response curve, but ordinarily they do not appear on the scope, since the higher frequencies are limited by the loading effect of the scope cable capacitance on the picture 2nd detector, which pulls down the response. If the scope has an effective response to low frequencies only, the marker pip will appear as in *b* of the drawing. This is easier to use than the curve at *a*. In order to get this small pip with the high-frequency scope, we use an isolating resistor or shunt capacitor, connected as shown in *c*. Values are as follows: Shunt capacitor, about 500 mmf; isolating resistor, about 20 K.

If the shunt capacitor is too large and you're using a double trace on the scope, phased to look like a single trace, the two traces cannot be made to coincide. This is due to low-frequency phase shift caused by the capacitor. When blanking is used, the curve will be distorted, sometimes seriously. For this reason, it's safer to use the isolating resistor. The service notes may recommend values up to a megohm for connections to certain points. Always use the recommended value.

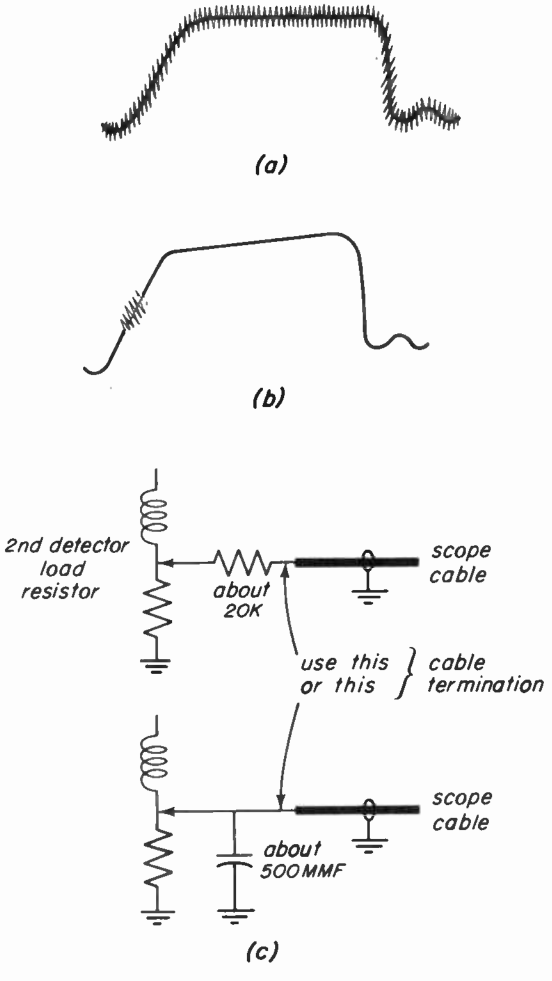

Fig. 41-51

Adjusting Blanking. – The blanking control is located on the sweep generator. However, blanking should not be adjusted until the sweep and scope are connected to the set.

After the units are connected and the controls on both have been set to obtain a usable response curve on the scope screen, phasing is adjusted to obtain a single trace. This is important, because if blanking is used when the traces have not been phased, the resultant curve may extend off the side of the CRO track.

The double trace should appear like that of *a* in Fig. 41-52, which might be any overcoupled transformer. Adjust the phasing control on the sweep generator until the two traces appear as one, as in *b*. If internal sine-wave sweep voltage from the power line is available with the CRO in use, adjust the phasing control on the *scope* to run the traces together.

When the trace appears as shown in *b*, turn on the blanking and the return trace will give a zero reference line, as in *d*. This is the true response curve.

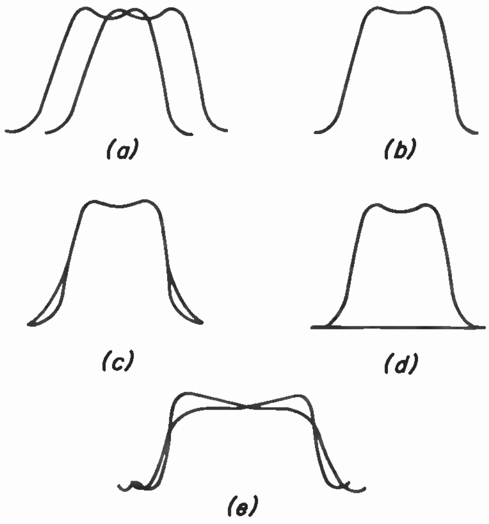

Fig. 41-52

If it is impossible to make the two traces coincide exactly, as shown at *c* of Fig. 41-52, a true response will not result when the blanking is turned on. Obviously, the true response is a compromise between the two curves, but blanking eliminates one trace without changing the other, which is wrong. With experience, it is possible to allow for this on a waveshape of this form, since the main portion of the curve is correct.

But note in *e* how serious this can be on the picture i-f response curve. The top of the curve shows tilts in opposite directions, and the skirts don't coincide – yet this response was taken from a normal amplifier. It is almost impossible to determine the true response. If the blanking were turned on, a single curve would result, but the distortion would be even worse.

The basic reason for the two traces failing to coincide is poor low-frequency response. It may be caused by too large a shunt capacitor terminating the scope cable, poor waveshape of the 60-cycle power-line voltage, or poor low-frequency response of the scope itself. The only cause which can be remedied easily is the cable termination – use an isolating resistor in place of the capacitor!

Remember to let the scope warm up long enough to become stabilized: 15 to 20 minutes is best.

Marker Requirements. – The most important single factor concerning the marker is that it must be accurate. If you have any doubts about your marker generator, or if it has been unused for some time, calibrate the unit before attempting to use it. A marker which is only 0.25 mc off frequency can cause misalignment of a set. Your marker generator may have a built-in crystal standard for this purpose; if not, any good crystal-controlled heterodyne frequency meter will do the trick. The most common calibration method is zero-beating the output of the marker against the known standard at the i-f frequencies, and at the sound and picture frequencies for all the r-f channels.

The calibration should be checked at regular intervals. Once a month is not too often if the equipment receives fairly constant use.

Marker Connections. – One precaution is important in sweep alignment: make certain that the marker does not affect the response curve or alter the sweep output. The sweep output is most likely to be affected if the marker and sweep are connected to the same point in the circuit. This difficulty can be eliminated by connecting the marker to the grid of a tube one or more stages ahead of the sweep connection. If it must be connected at the same point as the sweep, use a terminating (carbon) resistor of about 100 ohms in series with the marker cable. Another method is to connect the ground clip to the chassis of the set, but just place the output lead *near* the amplifier. Often there is enough stray coupling to provide a marker pip on the scope. The same result can be obtained by attaching the output clip to the insulated body of a carbon grid resistor. There is no actual connection, but the stray coupling puts in the marker signal.

The response is affected by too high an output from the marker, which causes overloading and curve distortion. In sweep alignment, both these dangers can be eliminated by the following procedure:

1. Connect the sweep and the scope first, and get a response curve.
2. Connect the marker, but leave the output turned off. Watch the response curve when the marker is connected, to see if it changes. If it does, connect the marker at another point.
3. With the marker output attenuator at zero, turn on and tune the marker. Again, watch for any change in the curve.
4. Turn up the marker output gradually until a usable marker pip appears on the response curve. Use no more output than necessary.

Some sweep generators have a built-in marker generator. It may be difficult when using such equipment to avoid some effect on the response curve when the marker is turned on. In this case, set up the sweep and scope to obtain the desired response curve, then turn on the marker and tune it to the required frequency. Place a pencil mark on the screen of the scope at the position on the marker pip. (You may wish to mark several frequencies.) Turn off the marker, and proceed with alignment, using the pencil marks as frequency references. They will be accurate as long as you do not change the horizontal position of the curve. The same method may be used with a separate marker.

In peak alignment there is also a danger of overloading the amplifier circuits with too much signal from the marker. Since there is usually only a VTVM reading to go by, it's not so easy to notice an overload. If rotating the marker output attenuator does not produce a corresponding change in the meter reading, an overload may exist. When the marker output is reduced, the meter needle should drop immediately.

The danger of overload during peak alignment is reduced by following this procedure:

1. Connect the marker and the VTVM to the amplifier to be tested. Tune the marker to the frequency of the first trap or coil to be adjusted, but leave the output attenuator at zero.

2. Turn the VTVM scale-selector switch to the 3- or 5-volt scale. Gradually increase the marker output until the meter needle rides to approximately center scale. Remember that quite a strong signal is necessary at trap frequencies, because the traps attempt to suppress the signal.

3. Use a fiber or plastic neutralizing stick to adjust the proper trap or coil. Adjust traps for a minimum reading on the meter; adjust coils for maximum.

4. Turn the marker output back to zero. Tune to the next trap or coil frequency.

5. Increase the marker output until the VTVM needle reaches center scale. Adjust the proper trap or coil and repeat the process until the amplifier is fully aligned.

6. In stage-by-stage peak alignment, which is necessary sometimes when the i-f amplifier is oscillating, and in isolating troubles, turning the marker output to zero each time the marker cable is moved is important, since the possibility of overload is even more likely in this case.

7. Any time the VTVM needle goes too high on the scale during a peaking adjustment, correct by reducing the marker output, not by going to a higher scale on the meter.

Terminating the Marker Cable. – The marker cable should be shielded to within about an inch of the probe at its tip. There are only two occasions when it is necessary to use a special method of termination.

When the marker is affecting the sweep output, use a 100-ohm resistor in series with the marker cable, as described above.

When the marker cable is connected in a circuit carrying a bias voltage (or any d-c potential), a series blocking capacitor should be used to prevent shorting out the d-c. A value of about 500 mmf is satisfactory for all present i-f frequencies.

It is important that the marker generator be allowed to warm up for the full period recommended by the manufacturer, to stabilize the frequency of the unit.

Using 400-cycle Modulation on the Marker. – Almost every commercial marker generator contains an internal 400-cycle modulator, to amplitude-modulate the variable oscillator.

The modulated marker is used principally in aligning the discriminator or ratio detector. This takes advantage of the fact that an AM signal at the center frequency of the discriminator produces zero output.

The following procedure is used:

1. Connect the test equipment as shown in Fig. 41-53. For some sets, the manufacturer recommends an isolating resistor in series with the scope cable. Be sure to connect the scope cable to the output cathode of the discriminator. The other cathode is grounded, and will not produce a curve on the scope.

2. Set the generator to sweep a band of 1 or 2 mc around the sound i-f, and obtain the response curve on the scope. The curve should have the characteristic shape of the discriminator response, as shown at *a* of Fig. 41-54.

3. Turn on the marker generator, and tune it to the sound i-f – assume that for this receiver it is 21.25 mc. Turn on the internal marker modulator.

4. If the discriminator is correctly aligned, with the center frequency or "crossover" point exactly at 21.25 mc and the slope linear, there will be little or no change in the curve on the scope.

5. If the discriminator is not correctly aligned – if the center frequency is other than 21.25 mc or the slope is not linear – the amplitude modulation will become visible on the curve, as at *b*, especially

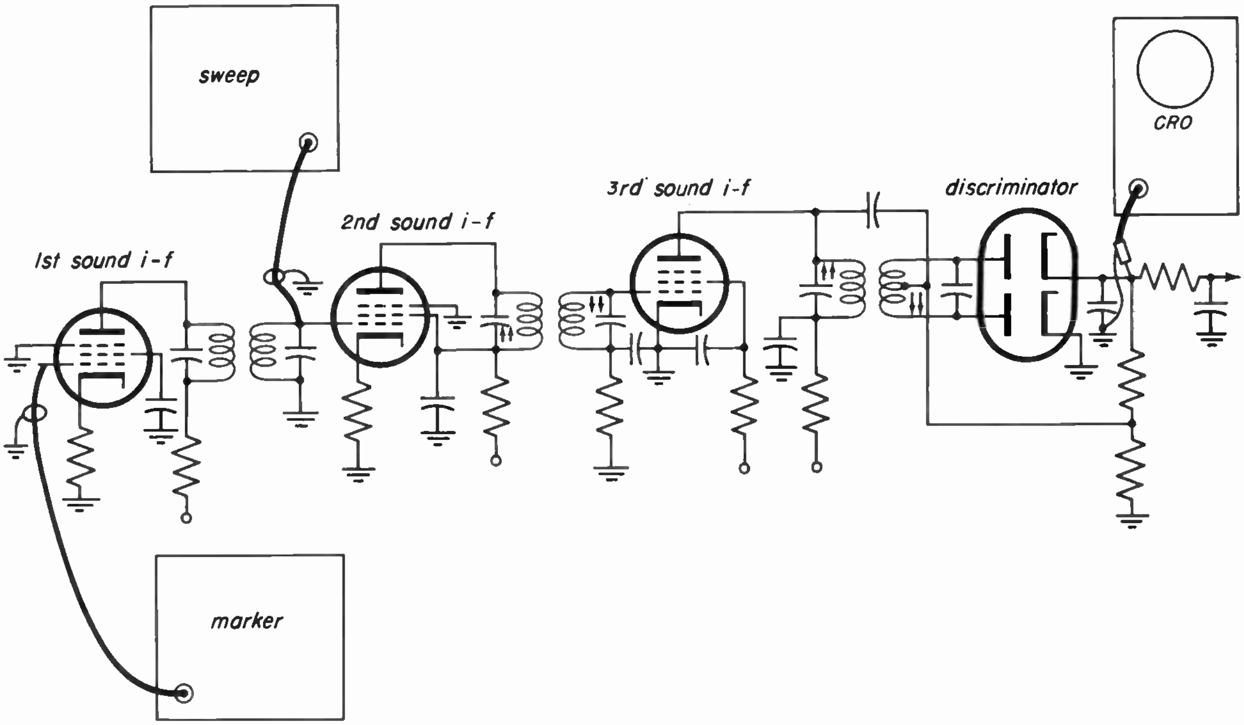

Fig. 41-53

beyond the peaks, although even the center slope may thicken considerably. By adjusting the secondary of the discriminator transformer, we should be able to find a point at which the 400-cycle modulation disappears and the curve looks like that at *a*. We have then moved the center frequency of the discriminator to 21.25 mc, where the marker is operating, and the AM signal at the center frequency is nulled by the action of the discriminator. It may not be possible to cancel out the AM completely if the marker generator has some frequency modulation, but it is usually possible to get enough null to show that the center frequency is correct.

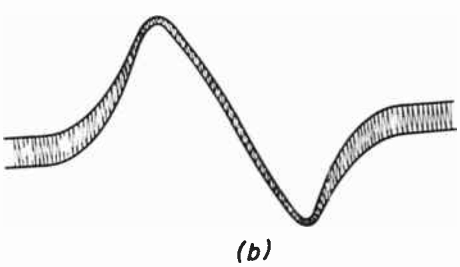

Fig. 41-54

The modulated marker is particularly useful in adjusting the secondary coil which sets the zero output frequency of the discriminator. An unmodulated marker disappears at the center portion of the slope. Thus, it is necessary to approximate the marker frequency at which the discriminator output is zero. With a modulated marker, the zero output frequency is that at which minimum 400-cycle modulation appears on the curve.

6. If the slope of the discriminator curve has a bend or jog in it, the null will be poor. The non-linearity of the slope will will show up when the sweep and CRO are first connected, however, so this can be corrected by adjusting the discriminator transformer primary before the marker signal is injected.

Vacuum-tube Voltmeter. – The VTVM may be used in two ways in alignment:

1. Measuring bias
2. Measuring rectified voltages

In measuring the rectified voltages, the amplitudes of which indicate the response of the circuits at various frequencies, the VTVM is used at the four points where these voltages are available: the output of the picture second detector, the output of the sound discriminator, the converter grid, and the last sound i-f grid.

The instrument should be kept on a low scale at all times to avoid the possibility of overloading the amplifiers. If the signal becomes too high, reduce the marker output.

Terminate the shielded VTVM cable with an isolating (series) resistor of about 20 K ohms (or whatever value is recommended in the service data). In some discriminator circuits, the isolating resistor must be as high as one megohm, to avoid detuning the discriminator transformer. The manufacturer's literature will warn of such special cases.

Difficulties and Precautions. – Even after the test equipment has been connected, observing the precautions mentioned in previous paragraphs, several factors can cause trouble and distort the response curve.

Grounding. – Ordinary wire may not be adequate to ground test equipment. When grounding is not adequate, the response curve may change every time you bring your hand near the test equipment or chassis.

This effect is due to power-line coupling, caused by the fact that the instruments are at different ground potentials. Feedback occurs from the receiver into the power line and thence to the test equipment, or vice versa. This causes regeneration, and may even be strong enough to cause oscillation – and hand capacity makes the instability worse.

To eliminate the trouble, the grounding must be improved. Place a large metal sheet (copper is best; sheet iron will do) on the bench top, and set all test equipment and the receiver on the metal. Make sure that the electrical contact between the units and the metal sheet is good. If the test set-up is permanent, it's best to install a copper bench top. Some matched sets of test equipment which fit into a metal rack designed to minimize this trouble are available, but it is still wise to set the receiver chassis on a sheet of copper. The test rack should be bonded to this with heavy copper braid.

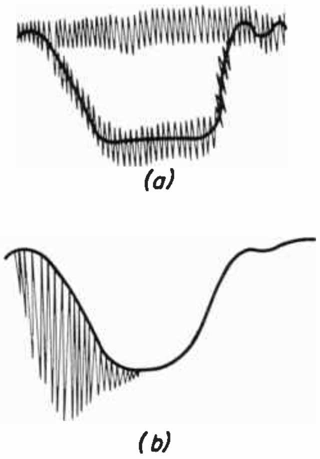

(a)

(b)

Fig. 41-55

Spurious Responses. – Various types of small waveforms and oscillations may appear on the response curve. One type of spurious response, called "hash", is simply a poor signal-to-noise ratio, caused by using a very low output from the sweep generator. This is shown in Fig. 41-55*a*. Although, normally, the scope output should be low, if this type of hash appears, try turning up the sweep output and reducing the vertical gain of the scope, being careful not to cause overload. This often will clear up the hash.

Another type of hash is interference from the deflection oscillators, either vertical or horizontal, which is picked up on the scope leads and travels to the vertical amplifier. One solution for this is to pull out the oscillator tube. Another solution is to reduce the scope gain and increase the sweep output, as discussed above.

A third cause of stray waveforms on the response curve, which causes oscillation resembling a marker pip, is radiation from the local oscillator of another TV set nearby. If it is possible to work on another channel, this is the simplest solution.

The beat shown in Fig. 41-55*b* is caused by oscillation in picture i-f stages, usually occurring because two stages are aligned to the same frequency. Other possible causes are poor grounding, stray coupling feedback along a test cable, or defective bypass capacitors. A milder form of the same trouble is regeneration, which can be recognized by excessive noise or snow and horizontal smear in the picture or test pattern. This is illustrated in Fig. 41-56.

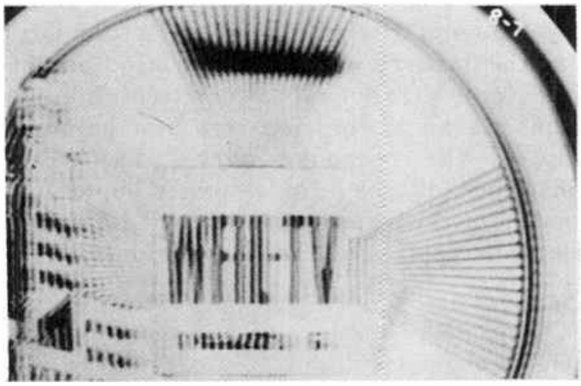

Fig. 41-56

Oscillation occurs when the feedback is excessive. It produces a high voltage across the load resistor of the picture 2d detector. This voltage disappears when the last i-f tube is pulled. In some cases, the oscillation can be stopped by increasing the grid bias (with a bias box). If this doesn't work, stage-by-stage alignment must be done. Disable all but the last i-f stage with .001-mf capacitors shunted from the control grids to ground. Connect the marker generator (in peak alignment) to the grid of the last i-f stage and the VTVM across the 2d detector load resistor. Align the last stage at the proper frequency. Then shift the marker probe to the grid of the next-to-last stage, remove the .001 capacitor from that stage, and align. Repeat this for each picture i-f stage, working from the 2d detector toward the converter, or back to front.

Disabling the AGC. – AGC changes the bias on the r-f and picture i-f tubes according to the strength of the signal being received. Any change in bias on an amplifier changes the gain and alters the response. During alignment, we want only the adjustments moving the response curve. For this reason, we should disable the AGC in sets which use it, substituting a bias which can be adjusted to an average normal value; usually about -3 volts. The construction and use of a bias box was covered in Lessons 32 and 34.

Service data specifies what bias to use during alignment. In aligning a set which is used in a fringe area, however, better results will be obtained by setting the bias 2 or 3 volts more positive than the manufacturer recommends for normal operation, since the bias is much less on weak signals than on strong ones.

Trap in the Pass Band. – One effect of misalignment can distort the response curve badly. Figure 41-57 shows the curve resulting when the 27.25-mc trap is tuned below the frequency of the picture i-f carrier. If the curve were further distorted by some other factor, such as narrow bandwidth, it might be unrecognizable.

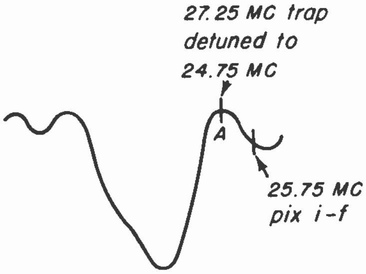

Fig. 41-57

When a curve such as this one appears, the quickest way of identifying the trap locations is by touching each trap with the fingers. This causes the trap minimum point (A in Fig. 41-57) to move left or right. In the illustration, touching the 27.25-mc trap would identify it as represented by the dip on the right, but we would not know it was detuned until we inserted the marker signal at the picture i-f, although an experienced technician would probably guess as much from the steepness and amplitude of the right-hand slope.

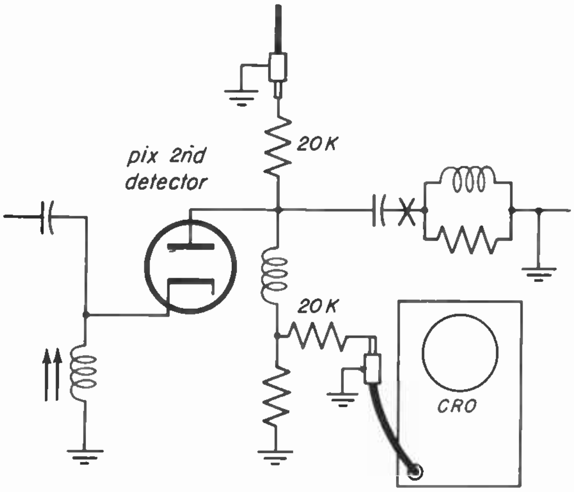

Fig. 41-58

Miscellaneous. – It is always safest to connect the scope probe directly across the picture 2d detector load resistor, using an isolating resistor. This connection is shown in Fig. 41-58, with another permissible connection across both the load resistor and the peaking coil. Do not, however, take the detector waveform from the output side of a coupling capacitor – the point marked X in the diagram – because this introduces a low-frequency phase shift which varies with the value of the capacitor. The two traces on the scope will not coincide, and if blanking is used, more serious distortion results. Unless the service data specifically says otherwise, take the scope signal across the load resistor.

In aligning an i-f amplifier which uses overcoupled transformers, an unidentified dip which can't be blamed on any of the traps may appear in the response curve. The sweep generator, when connected to the grid of a tube, is also connected to the secondary of the interstage transformer. The sweep cable termination swamps out the effect of the secondary, but the primary and its associated capacitor form a resonant circuit which functions as an absorption trap and puts the dip in the response curve. The exact position of the dip depends upon the tuning of the primary. In a sound i-f amplifier, for instance, the dip might come at

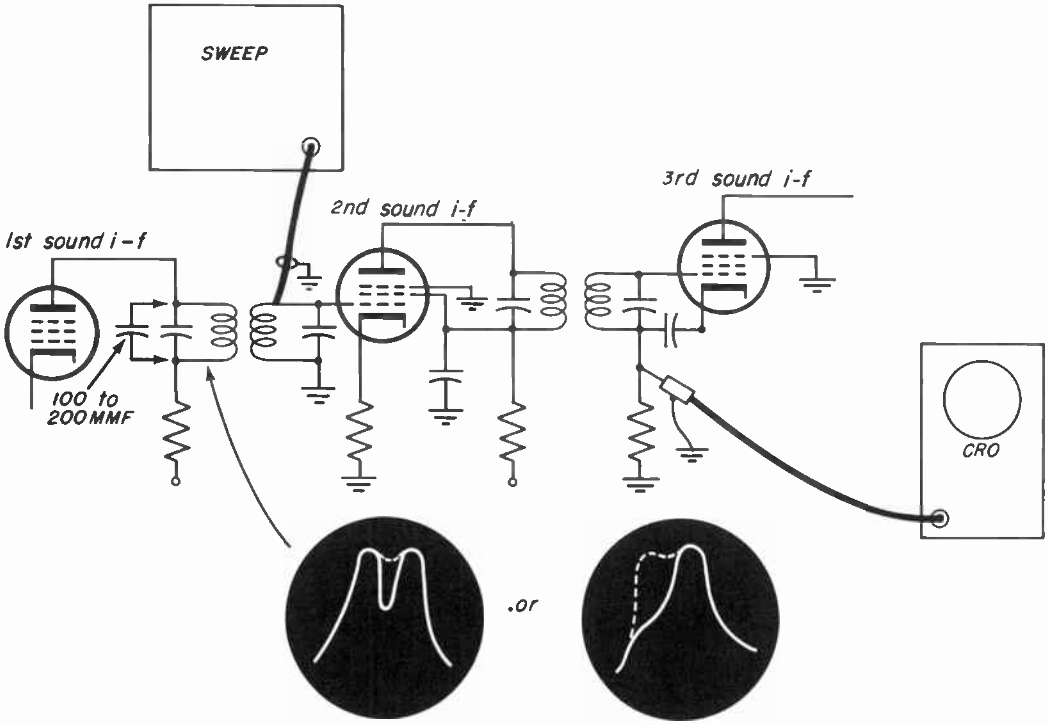

Fig. 41-59

the exact center of the curve, as shown in Fig. 41-59, or it might be considerably off-center, giving a peak and plateau effect.

The dip can be eliminated by connecting a 100- or 200-mmf capacitor across the transformer primary, as shown in Fig. 41-59. This detunes the primary sufficiently to remove the trap effect, and the resultant curve is normal.

When an r-f tuner is aligned, two preliminary steps should be taken. The first picture i-f stage should be disabled, preferably by pulling out the tube. This prevents curve distortion which might otherwise be caused by trap and hum reflections from the i-f amplifier, as shown at *a* of Fig. 41-60. In addition, the primary of the converter-first picture i-f transformer should be loaded with a small resistor (about 300 ohms) or detuned with a 200-mmf capacitor to kill resonance in the converter plate circuit, which may also distort the response. The latter is not necessary in all tuners; ordinarily the service data gives this information.

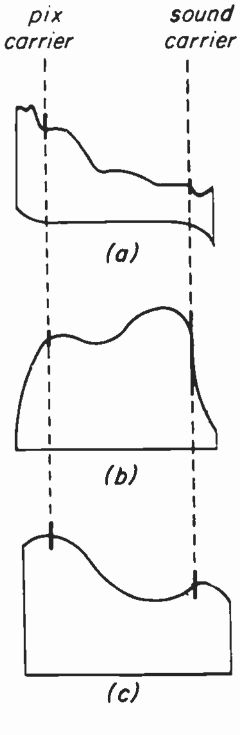

Fig. 41-60

Whether the front end is aligned in a jig or in the receiver, the r-f oscillator tube should be in place and operating. The curve at *b* of the diagram shows the distortion which results when oscillator bias is removed from the converter. Curve *c* shows the true response, with the oscillator tube in place and the first i-f tube removed.

ALIGNMENT PROCEDURE

41-7. The set of diagrams and instructions which follows is intended to give a working procedure for alignment, which can be adapted to any receiver. Remember that the curves seen on the scope frequently will have different polarity from those shown in the diagrams.

Over-all R-f and I-f Response Curves – Connect the test equipment as indicated in Fig. 41-61*a*. Make certain that the impedance of the sweep cable matches the input impedance of the receiver, and use an isolating resistor of about 20 K ohms to terminate the scope cable. Enough marker coupling usually can be obtained by clipping the input cable to the insulated body of the 1st picture i-f grid resistor. Keep the sweep and marker outputs low to avoid overload. Tune the sweep frequency and the receiver channel selector to the highest channel in use in the customer's area. Set the marker frequency to the i-f picture carrier frequency, which can be found in the service data. Leave the marker at this frequency; coupling it into the i-f amplifier saves having to re-adjust it for each r-f channel.

Connect a bias box to the r-f and i-f bias bus to kill the AGC, and set the bias to the value recommended by the manufacturer.

Set the fine-tuning control to approximately the center of its range.

Adjust the controls of the test equipment to obtain a response curve of the proper amplitude. It should appear similar to that shown in Fig. 41-61*b*, and the marker at the i-f picture carrier frequency should fall at some point between 40 and 60 per cent on the slope. If the marker generator is the type which can produce two marker pips, 4.5 mc apart, turn on the second marker to check the bandwidth of

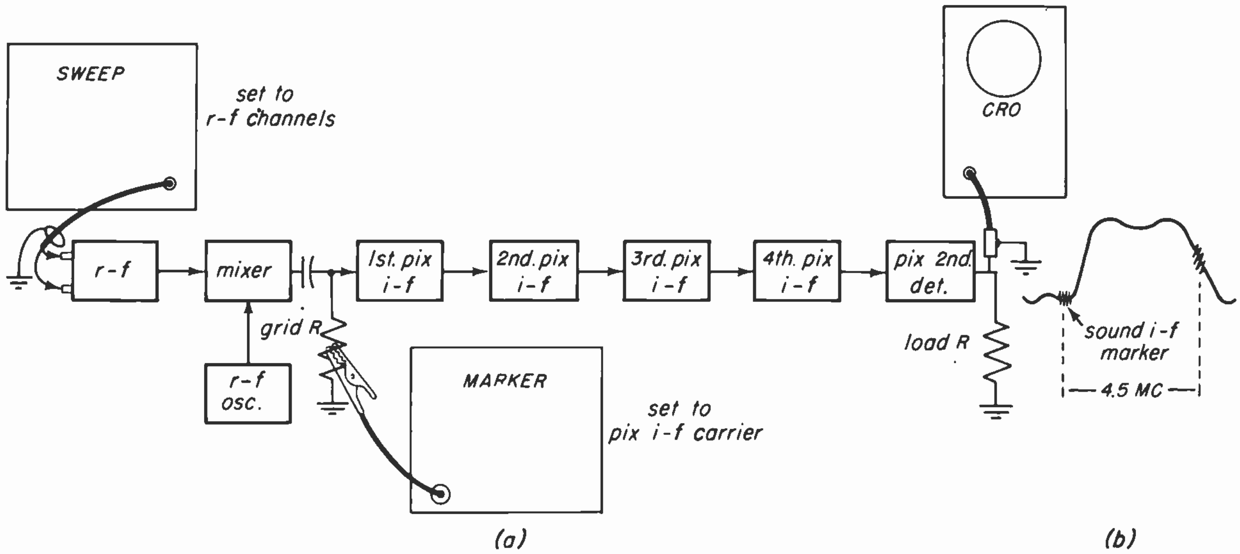

Fig. 41-61

the curve. Otherwise, retune the unit to the i-f sound carrier frequency. The second pip should appear at the dip caused by the sound traps, or it may be completely attenuated by the traps, in which case tune the marker generator down one-half mc or so until it appears. The slope of the curve above the trap should be quite steep, as illustrated. Once you've checked the first curve for bandwidth in this manner, return the marker to the i-f picture carrier frequency and leave it there. You can tell by the width of the other curves whether or not they're satisfactory.

Continue by checking the response on each channel, or at least each channel in use in the customer's area. Remember to change both the sweep frequency and the channel selector switch together. The response will be slightly different on each channel, but it should always be within the limits discussed in an earlier section. If the response appears poor on certain, but not all channels, make a note to check the r-f curves on these channels. If the picture carrier marker pip falls outside the 40 to 60 per cent section of the slope, check the settings of the r-f oscillator frequency on the channels for which it is out of limits.

If the over-all curve has the characteristic shape of the picture i-f curve on even half the channels checked, the picture i-f amplifier probably does not need alignment. But if the response appears bad on all channels, move the sweep to the grid of the mixer and tune it to sweep the i-f band, checking the picture i-f amplifier. These circuits probably are responsible.

Picture I-f Amplifier Response. – The test set-up mentioned above gives the over-all picture i-f curve, which should appear like that shown in Fig. 41-61*b*. On this curve the position of the carrier is very important – if it does not fall at from 40 to 60 per cent on the slope, the amplifier is out of alignment. In a stagger-tuned set, one particular coil will be chiefly responsible for the angle of the slope and the carrier position; in over-coupled stages, two or more adjustments may be off.

Since both types of picture i-f amplifiers will be encountered, we'll discuss briefly both sweep and peak alignment.

Stage by Stage Sweep Alignment. – Connect the marker to the grid of the mixer tube, and the scope across the load resistor of the 2d detector, as shown in Fig. 41-62, using an isolating resistor in the scope lead. The sweep is connected first to the grid of the last picture i-f tube – properly terminated with a series capacitor and shunt resistor. This connection of the sweep is shown as posi-

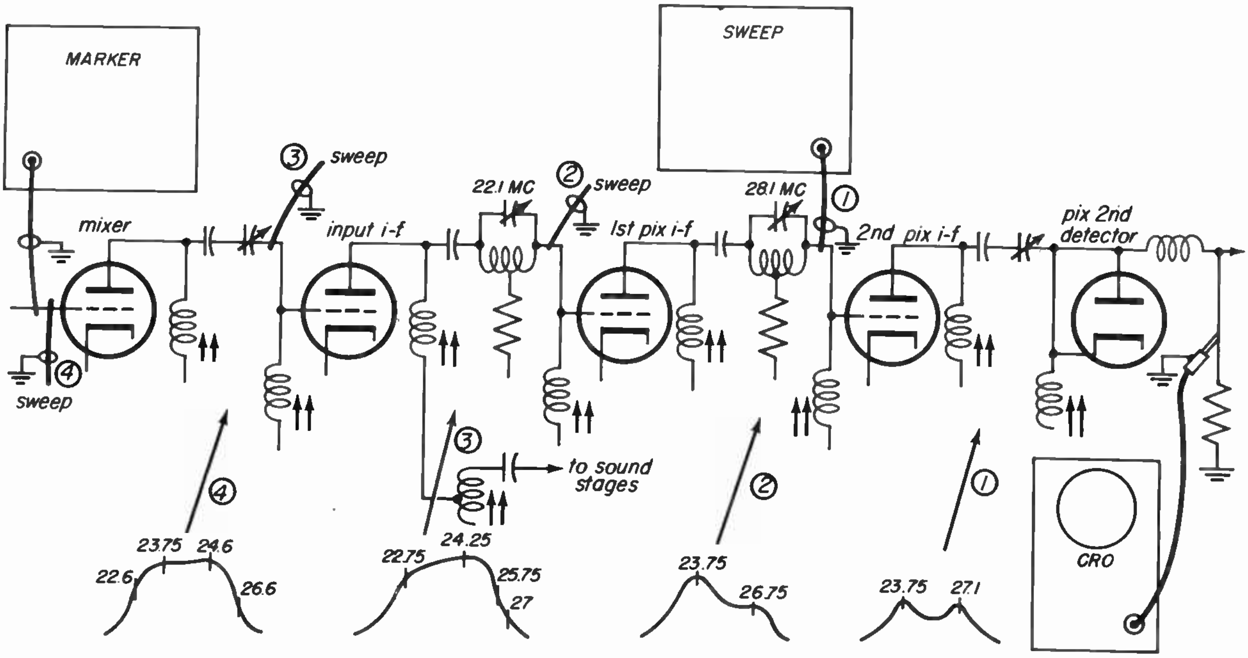

Fig. 41-62

tion (1). Tune the sweep to cover the i-f band, and the marker to 27.1, which is the first frequency to be checked. The i-f picture carrier in this particular receiver is 26.6 mc.

The curve appearing on the scope is the response of the picture 2nd detector network, the two coils and the trimmer indicated by arrow (1). To obtain the response shown under the arrow, set the trimmer all the way out, and adjust the coils until the curve peaks at the marker frequency of 27.1 mc. Then tune the marker to 23.25 mc and turn down the trimmer until a second peak is obtained at this frequency. The curve on the scope should look like the one in the illustration.

Set the marker at the frequency of the trap ahead of the 2nd picture i-f stage, 28.1 mc, and remove the sweep cable. Modulate the marker with 400-cycle AM and adjust the trap until the modulation envelope seen on the scope is at minimum amplitude.

Connect the sweep cable at position (2) to the grid of the 1st i-f tube. Turn the sweep output to zero and back up to obtain a usable curve without overload. Set the marker and adjust the two coils beside arrow (2) for the curve shown below, with the main peak at 23.75 mc. When this is done, disconnect the sweep, modulate the marker at 22.1 mc, and set the 22.1-mc trap which is ahead of the 1st picture i-f stage.

Before aligning the coils shown beside arrow (3), the manufacturer recommends that the sound i-f stages be aligned, due to the interaction of the sound transformer shown on the drawing on the 1st picture i-f coupling network.

The sweep cable is now connected at position (3) and the 1st picture i-f coils are adjusted to obtain the response indicated. Since there are no more traps, the sweep cable is moved to position (4) and the final adjustments made. The curve seen here is the over-all response of the amplifier. The 26.6-mc picture carrier should be at approximately 40 per cent on the slope.

Peak Alignment. – The equipment setup for peak alignment of a picture i-f amplifier is shown in Fig. 41-63. If the scope is used, alone or in conjunction with the VTVM, modulate the marker signal with the 400-cycle AM. By using both, you can make the adjustments for maximum or minimum swing of the meter needle and an occasional glance at the scope will warn you of overload, if it

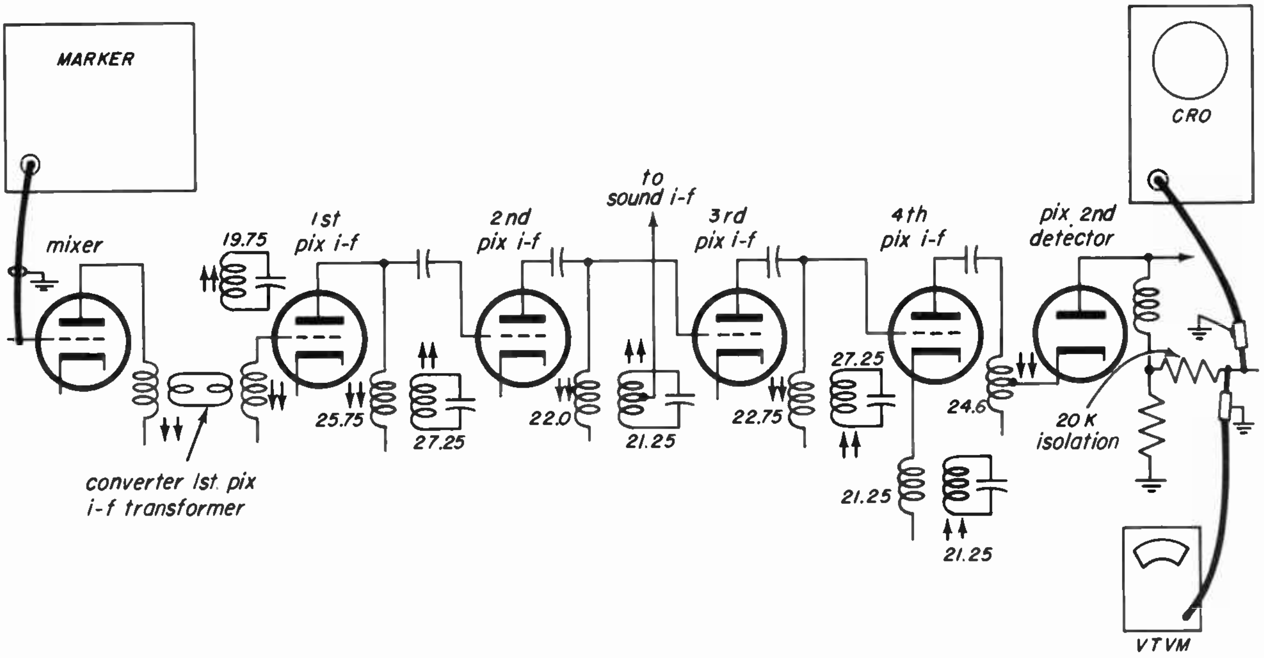

Fig. 41-63

occurs. Trap adjustments require a fairly strong signal from the marker generator, and it's easy to forget to reduce the marker output when you begin peaking the coils.

The traps should be adjusted first, and manufacturers recommend that the sound traps be set before the others.

Set the marker at 21.25 mc. With the VTVM on the 3- or 5-volt scale, turn up the marker output until the meter needle reads 1/3 to 1/2 scale. Adjust the 21.25-mc trap nearest the front end for a minimum reading on the VTVM. Then adjust the second sound trap. If it is difficult to get a definite null from the first trap, detune the second by turning in or out the adjustment screw until the reading on the meter rises somewhat. Then tune the first trap for a null. If the second trap now gives trouble, temporarily connect the marker cable to the grid of the tube just ahead of the second trap. Adjust the marker output to the proper value, set the trap for minimum on the meter, and return the marker cable to the mixer grid.

The two 27.25-mc traps should be adjusted next, using the same technique, if necessary, and then the adjacent-channel picture trap (19.75 mc).

Before making the peaking adjustments, reduce the marker output to zero and make certain that the bias box is connected and set to the recommended value. Service data specifies that the coils should be adjusted in the following order:

1. 22.75 mc
2. 24.6 mc
3. 22.0 mc
4. 25.55 mc

Tune the marker to 22.75 mc, turn up the output to obtain a usable reading on the VTVM and adjust the first coil for maximum on the meter. Align the other three in a similar manner.

This covers the peak alignment of all the traps and stagger-tuned coils. Still remaining, however, is the converter – 1st picture i-f transformer, which is overcoupled. The best way to adjust this transformer is by its response curve, which can be obtained most easily by using a rectifying (detector) probe on the scope cable to rectify the i-f in the same manner as the picture 2nd detector.

Figure 41-64 shows the equipment connected, as well as the response curve which should be obtained (solid line). On any overcoupled transformer, a consider-

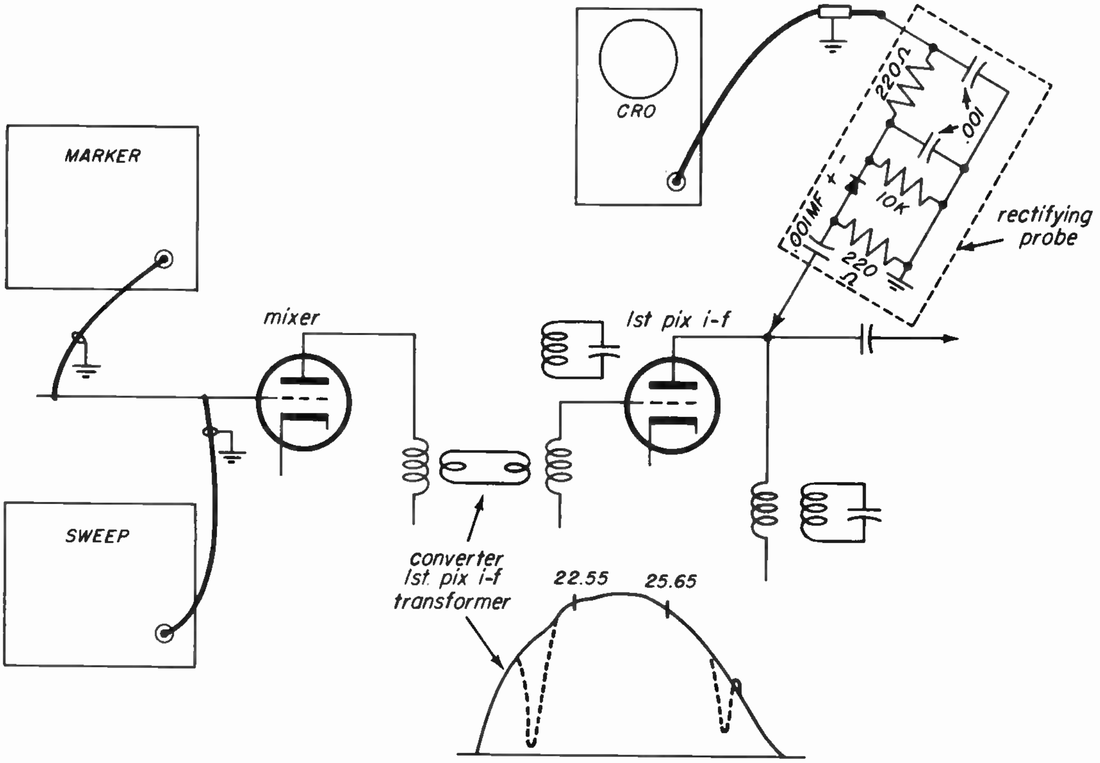

Fig. 41-64

able amount of time and trouble can be saved by the use of two neutralizing sticks. Place one on each adjustment screw, primary and secondary, and turn them simultaneously while watching the response. With a little practice, you can tell whether the curve is shaping up as it should, and which way to turn each stick to get the desired results.

The 220-ohm input resistor of the probe swamps out the plate coil of the first picture i-f, so that we do not see its response. The response of the grid of the first picture i-f is seen, but the probe is isolated from the grid coil (converter-secondary coil) and does not alter its resonant frequency.

If no rectifying probe for the scope is available, the curve of this transformer can be seen with the scope connected in the usual place across the load resistor of the picture 2nd detector. To do this, it is necessary to kill the response of all the other i-f stages by shunting each coil or transformer with a 330-ohm resistor. The traps need not be shunted; their only effect is to add the dips shown by the dotted lines. You can look at the response of any i-f stage by shunting out the others in this manner. If the service data provides the curves for reference, the stagger-tuned i-f amplifier can thus be sweep aligned.

Adjustment of the converter-1st picture i-f transformer completes the alignment of this picture i-f amplifier.

Discriminator Response. – It is often possible to align the discriminator by either peak or sweep alignment. Since we've already discussed the use of a modulated marker for discriminator sweep alignment, we'll cover the peak method here.

The marker generator should be connected to the grid of the last sound i-f amplifier tube and the VTVM to the center point of the diode load resistors in the discriminator. This set-up is shown in Fig. 41-65. In many discriminator circuits, it will be necessary to use a large-value isolation resistor in series with the small capacitance of the probe.

With the VTVM connected to the point

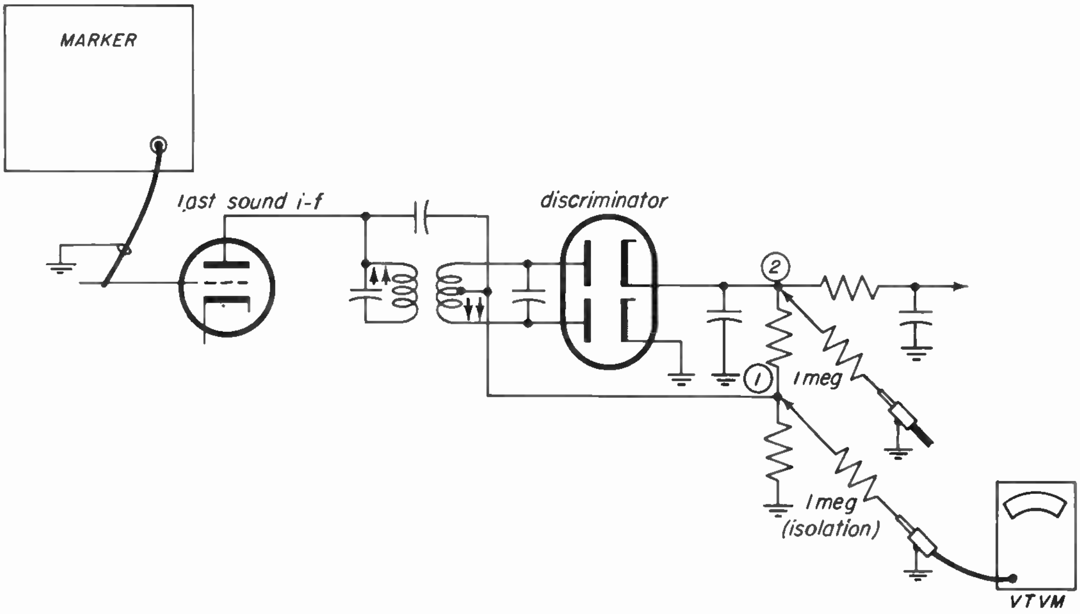

Fig. 41-65

marked (1), and the marker tuned to the i-f sound carrier frequency, adjust the primary of the discriminator transformer to obtain a maximum reading on the meter.

Now move the VTVM probe and the isolating resistor to the output cathode of the discriminator — the connection marked (2) — and adjust the transformer secondary for zero output on the meter.

Now check the discriminator action, using the center zero of the VTVM. Tune the marker away from the i-f sound carrier until a positive or negative peak voltage reading is obtained on the meter. Then tune the marker back through the i-f and continue until a peak voltage reading of the opposite polarity is obtained. The amplitudes of the peak readings should be nearly the same — if they aren't, change the setting of the primary, readjust the secondary for zero voltage at the i-f sound carrier frequency and check the peaks again. Repeat this procedure until the peaks are approximately equal.

Ratio Detector. — The ratio detector makes use of a third (tertiary) winding on the discriminator transformer and a load circuit distinguished by the electrolytic

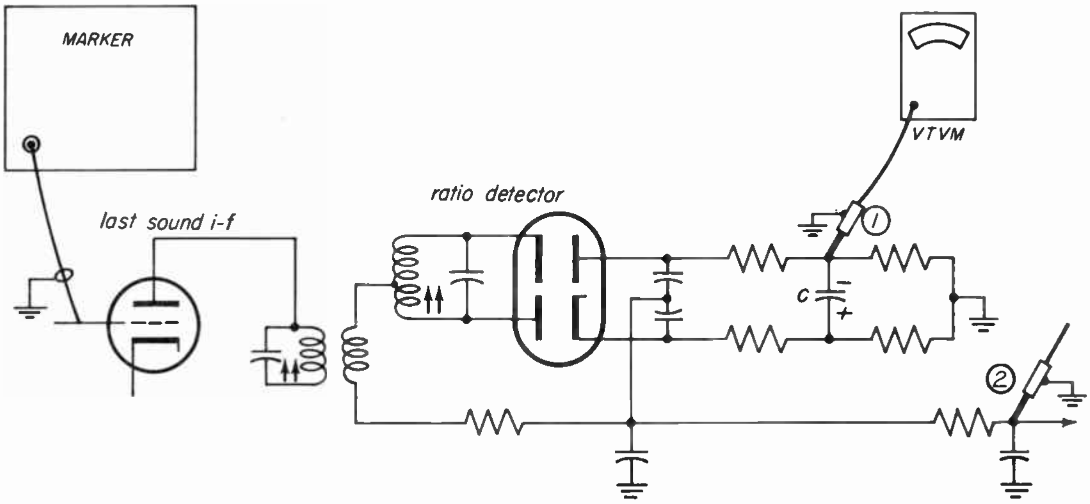

Fig. 41-66

capacitor to provide a constant reference voltage, but the sweep alignment procedure is usually about the same as that for the discriminator.

Figure 41-66 shows a typical circuit of a ratio detector, and indicates the two points at which the VTVM probe should be connected for peak alignment. If a scope is used, connect the scope probe at the output – position (2) on the drawing. In sweep alignment, the response curve should have the same general shape as that of the discriminator, although in some cases, the high- and low-frequency slopes will be somewhat steeper. In either type of alignment, the primary of the transformer adjusts linearity, while the secondary determines the center frequency.

In peak aligning the ratio detector, connect the VTVM to position (1) to adjust the primary for maximum. Connect to position (2) to adjust the secondary for zero. The signal generator is set at the sound carrier frequency. Some ratio detectors have one end of C grounded. In such circuits, a residual d-c voltage is present at the audio output connection (2). For this reason, the secondary cannot be peak-aligned for zero with the VTVM connected at the audio output point. Connect two 100-K resistors across the electrolytic condenser (C) and connect the VTVM to the center of the resistors. The secondary can then be adjusted to zero.

The R-f Section. – Circuits used in the front end vary widely from set to set, although the basic arrangements are similar. Therefore, while it is possible to give a general alignment procedure, you should always check the service data for specific test connections and adjustment points.

Figure 41-67*a* shows an example of a test set-up for r-f alignment. The sweep is connected to the antenna terminals. The output impedance at the end of the sweep cable should match the receiver input impedance. If it doesn't, use a simple resistance pad, as shown in *b* of the drawing, to obtain a match. The shunt resistor should be approximately equal to the cable impedance, while the three resistors in series should add up to within 20 or 30 ohms of the receiver's input impedance. R1 and R2 must be equal. A typical response curve is shown in *c* of the figure.

The marker output should be loosely coupled to the front end, and the scope probe connected, usually through an isolation resistor, to a point which will give the r-f response envelope. In many tuners, this connection can be made across the converter grid-bias resistor, as shown, but this is not always the case. Some circuits must be temporarily modified in order to get a response.

Remember to kill trap and hum reflections either by pulling the first picture i-f tube or by connecting a 200-mmf capacitor (with short leads) from this grid to the chassis. Set the bias to the recommended value.

Tune the sweep generator and the front end to the same channel. You will save time by working first on the channel with the narrowest response curve, which is usually specified in the service data. Due to the interaction between channels on all but turret tuners, when you get the narrowest ones adjusted correctly, the others won't be too wide and the same channel need not be adjusted twice.

Set the marker generator to the picture carrier frequency for the channel being worked on. This pip should fall on one shoulder of the curve, at or near the peak. Note the location of this pip (marking it on the scope screen with crayon), then tune the marker to the sound-carrier frequency. The carrier pips should fall on the flat portion of the top, or not lower than 70 per cent on the slopes, if the response is fairly narrow.

The marker generator must be extremely accurate for this use. To avoid any possibility of the marker's being off-frequency, it's possible to use the actual station carriers as marker pips on occupied channels. Simply connect the lead-in from an antenna to the input terminals of the tuner, along with the sweep connection. The marker generator is removed entirely. The response curve will appear extremely bumpy, due to the constantly

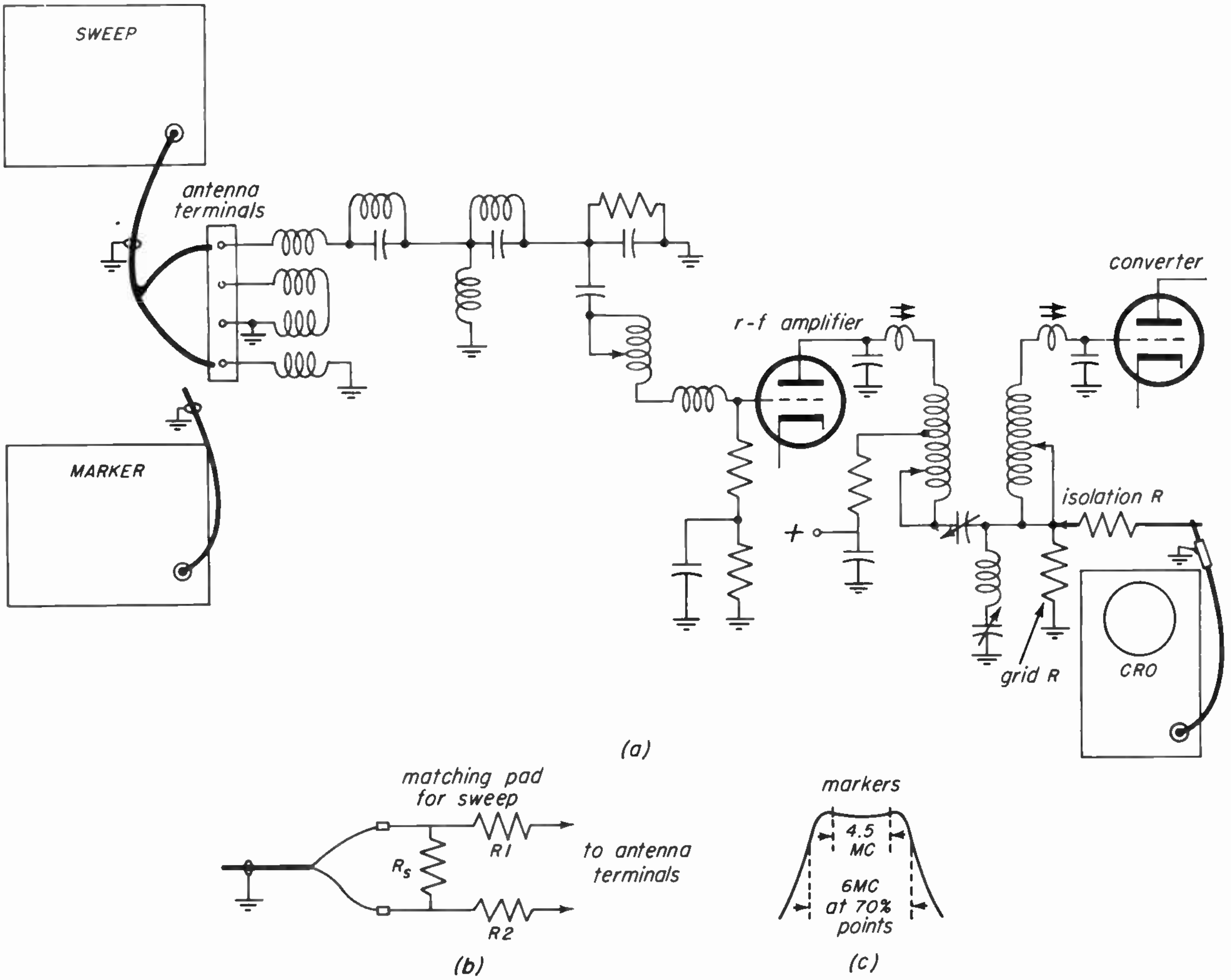

(a)

(b)

(c)

Fig. 41-67

changing sidebands in the station transmission, but you will be able to see the carrier pips without difficulty. Mark the locations of these pips on the scope screen with crayon or grease pencil, and then remove the antenna lead-in — leaving the sweep connected. There will then be a smooth response, and the carrier frequencies will be accurately established. Once the marks are made, don't change the horizontal sweep of the scope or the center frequency of the sweep generator until you've finished working on that channel.

Make the necessary adjustments in the order specified by the service data. This sequence of adjustments is often essential when the tuner is badly out of alignment, but minor touching-up usually can be done without regard to the exact sequence. It's usually best to align the channels in the recommended order, however. When the response curve has been brought to the recommended shape and amplitude on one channel, switch the tuner, sweep generator, and marker generator, if used, to the next channel. Erase any previous crayon marks on the scope screen and establish the new carrier locations by either of the methods described. Make the adjustments necessary to get the response of this channel right, then repeat the procedure on all remaining channels.

Since most of the adjustments have considerable interaction — gain affects bandwidth and tilt, etc. — you'll often save time by working with two neutralizing sticks and adjusting two trimmers or cores at the same time.

Adjusting R-f Oscillator. — If the r-f oscillator is not operating at the correct frequency on each channel, the i-f picture and sound carriers will not fall at the correct points on the over-all picture i-f curve. The oscillator operates above or below – usually above – the r-f picture carrier frequency by an amount exactly equal to the picture i-f of the set.

In some sets, it is necessary to set the oscillator frequencies before aligning the tuner. The service data will tell you when this is the case.

There are two reasons why the oscillator frequency should be correct before alignment. First; in the case of r-f and converter alignment, the oscillator supplies bias for the converter. If the oscillator frequency is not correct, the converter grid bias will not be correct, and the curve will not represent the response actually present when the set is receiving a station. If a station is received, the oscillator frequency is necessarily correct. The second reason is significant when over-all alignment is checked. Difficulty may be experienced with sweeps of the type in which the frequency band swept is selected by a switch rather than a continuous tuning control. If the oscillator frequency is incorrect the band of i-f frequencies produced in the converter will not correspond to the band of i-f frequencies tuned to by the receiver. The curve will not be a true picture of the i-f response, since the curve shows only a part of the i-f passband. With switch-type sweep generators there is no method of compensating for this effect, by adjusting the sweep generator. The receiver local oscillator must be set to the correct frequency in order to see the whole curve.

We will describe four methods of setting the oscillator frequencies. When the tuner has been removed from the set and is being aligned in a jig, use one of the first three methods. The fourth method is for use when the oscillator is being adjusted with the tuner in the receiver. In this case, the discriminator must have been aligned first, so that its center-zero is exactly at the correct sound i-f.

The first three methods use the zero-beat principal, beating the oscillator output against an accurate signal known to be at the correct frequency. Figure 41-68 illustrates the three set-ups.

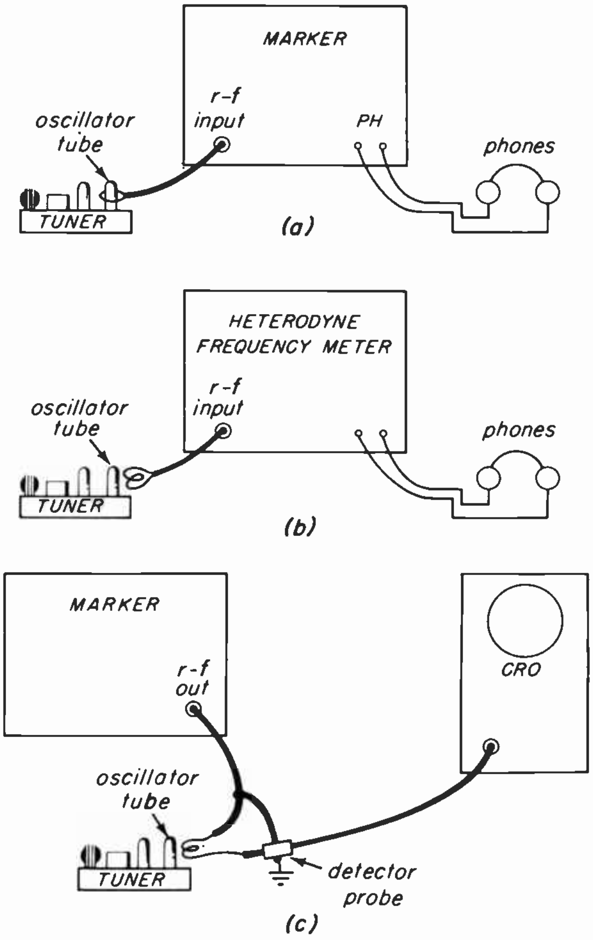

Fig. 41-68

If your marker generator includes a detector and a stage or two of audio amplification, the method shown at *a* may be used. Place a loop of wire around or near the oscillator tube and connect the ends to the r-f input of the marker. Plug a set of headphones into the PHONE jack. Tune the marker to the oscillator frequency for Channel 13, which can be found in the service data or by adding the picture i-f of the set to 211.25 mc, the r-f picture carrier for that channel. Switch the tuner to Channel 13 and adjust the fine-tuning control until a beat is audible in the phones. Check the fine-tuning control to be sure it is about the center of its travel. If it is, the oscillator frequency setting is correct for Channel 13. If it isn't, set the fine-tuning at the mid-point and vary the oscillator trimmer or slug for the channel until the beat note is heard. This note is high-pitched at the edges, low at the center, and the exact zero beat is the lowest pitch (sometimes complete silence) in the center. After the oscillator is adjusted on Channel 13, repeat the procedure for 12, 11, and so on.

If you have a heterodyne frequency meter which includes a detector, you can set it up as shown at *b*, using the same procedure described above. If crystals are used for frequency calibration, turn them off after the meter is set to the oscillator frequency.

If you have an accurate marker generator, without a detector stage, the method shown at *c* may be used. Loosely couple a turn of wire to the oscillator stage and connect one end to the r-f output cable of the marker, the other end to the detector probe of the scope or the simple crystal rectifier circuit shown previously. Connect the ground leads of the marker cable and the scope cable together. Switch the tuner to Channel 13 and tune the marker to the correct r-f oscillator frequency for this channel. With the fine-tuning control at the midpoint of its range, a large beat note should be visible on the scope. Tune the Channel 13 oscillator adjustment, if necessary, for maximum amplitude on the scope. Repeat the procedure on each channel in order.

The fourth method, which has two variations, is very convenient for use when the tuner is in the set, but the discriminator must have been aligned or checked. Figure 41-69 shows how the equipment is connected.

If a marker generator is being used, couple the marker output loosely to the antenna terminals of the receiver and connect a VTVM to the output of the discriminator. Switch the tuner to Channel 13 and tune the marker to the r-f sound carrier frequency for Channel 13, which is 215.75 mc. Set the fine-tuning control at the mid-point of its travel. The VTVM should read zero, which is the discriminator center-zero. Check the setting by varying the fine-tuning each way. A slight adjustment in one direction should produce a positive voltage reading, and adjustment in the opposite direction should cause a negative reading. If the discriminator output is not zero with the fine-tuning control at approximately the center of its travel, set the control at the mid-point and adjust the oscillator trimmer for Channel 13 until the meter is zeroed. Check again, as above, to make sure that this is the center-zero. Repeat the procedure on the other channels, working from 12 down.

In the other variation of this method, the station signal is used instead of the marker generator, which limits the adjustments to those channels in use in your

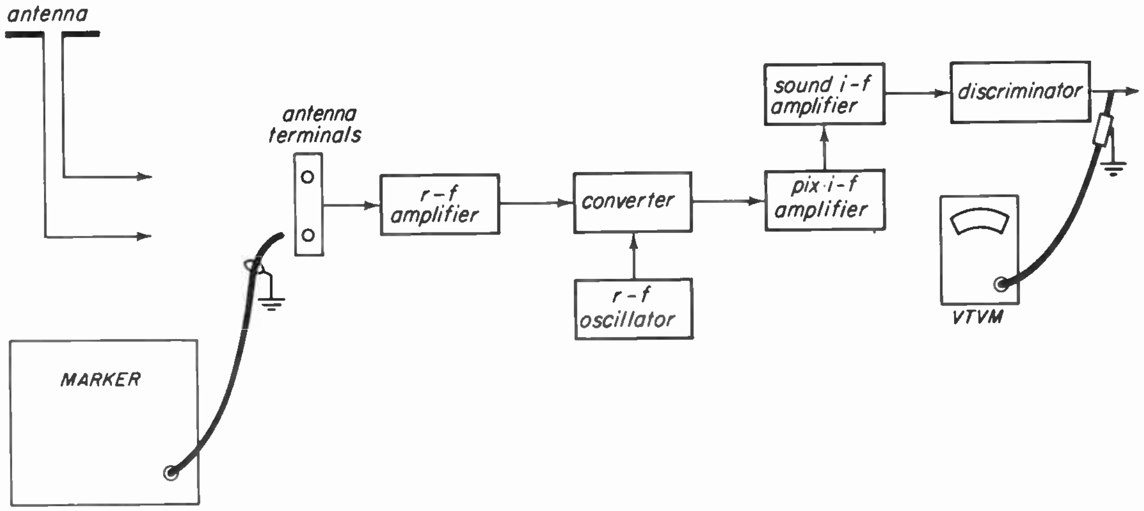

Fig. 41-69

area. Connect the antenna lead-in to the input terminals of the receiver and connect the VTVM to the discriminator output. Switch the tuner to the highest-frequency TV station on the air. Turn up the audio volume to a comfortable level and adjust the fine-tuning control to obtain the best sound. Check the VTVM and re-adjust the fine-tuning slightly if necessary to bring the reading to exactly zero. This is the center-zero of the discriminator. Now the fine-tuning control should be approximately at the center of its range. If it isn't, set it to the mid-point and tune the oscillator adjustment for the channel you're receiving until the meter reads zero. Repeat on each occupied channel from the highest to the lowest.

Final Check of Over-all Response Curves. – After the separate sections of the receiver have been aligned, it is important to look again at the over-all r-f and i-f picture curves to make any final touch-up adjustments that may be necessary for the best response.

Connect the test equipment as before, and check the curve on each channel. The shape will vary somewhat from channel to channel, but this is normal as long as each curve remains within the proper limits. If the response seems poor on some channels, try touching up the adjustments in the picture i-f amplifier to improve it, but be careful that an improvement on one channel doesn't make matters worse on the two adjacent channels.

Make sure that the marker pip for the i-f picture carrier rides at 40 to 60 percent on the slope for each channel.

For fringe areas, the carrier can be set up to about 70 percent on the slope. Also, to receive the best picture in a strong area the carrier can be moved down around 30 percent.

If the over-all picture i-f response doesn't seem quite right on any channel, which indicates a defect in the picture i-f amplifier, it's possible that two of the coils may be interchanged in frequency. For example, the third i-f transformer should be tuned to 22.0 mc, but may be at 22.5 mc, and the fifth i-f transformer should be tuned to 22.5 mc, but may be at 22.0 mc.

The peak frequency of each coil is given in the service data. The location of each can be checked on the response curve by touching the coils one after the other with your fingers. The portion of the response affected by each coil will jump or flicker when the coil is touched. Thus, in the above example, when the third i-f coil is touched the flicker should appear closer to the sound-trap frequency than when the fifth i-f coil is touched. If the results are opposite, the coils have been interchanged and must be re-peaked at the correct frequencies.

In many RCA receivers using the type of i-f found in the model 8T241, a hump may appear on the picture-carrier slope of the over-all i-f curve, as shown in Fig. 41-70*a*. This hump cannot be smoothed out without detuning the adjacent sound trap below it, which is not advisable.

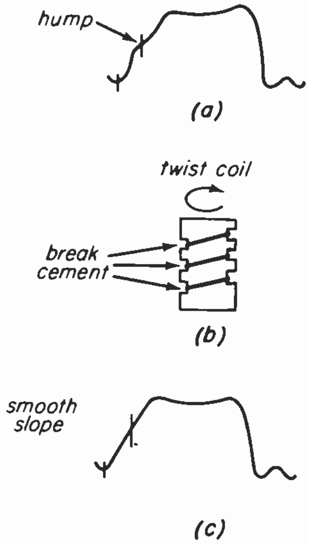

Fig. 41-70

The hump is caused by too-tight coupling in the coil-trap combinations used in these receivers. The trap is wound on a notched form, as illustrated in *b*, and held firmly in place by drops of cement. The solution is to break the cement and twist the coil itself, as shown in *b* of the figure, as if you were unscrewing it from the form. The result is that the coupling between trap and tuning coil is reduced and the hump disappears. It's a good idea to re-cement the coil to the notches after the correct position is found, to avoid possible microphonic trouble.

Trouble can also result from the construction of the coupled coils and traps used in many receivers. As shown in Fig. 41-71, there are two possible core positions for both the coil and the trap, and each position will give a correct indication (peak or null) on a VTVM connected at the 2nd detector. The outer setting of the core is better, however, because the inner position places the core too close to the other winding and serious interaction results. There is always a certain amount of interaction, but normally it can be compensated for. If the trap core, for instance, is set at the inner position for a null on the meter, you may find when peaking the coil that the trap is badly detuned. If you pull the trap back on frequency, the coil is detuned again, and the effect continues in the same manner. When coil and trap adjustments are abnormally critical, look for this source of trouble.

Occasionally it is desirable to use the lower position because mechanical limitations prevent moving the core far enough upward to reach the desired resonant frequency. Usually nothing obstructs the downward movement of the slug.

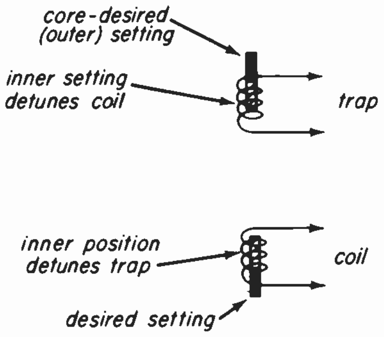

Fig. 41-71

In intercarrier sets, one of the most important factors is the location of the sound carrier, which should be at or near 5 percent on the slope of the response. If it goes much above 5 percent, picture buzz is likely to appear in the sound, and possibly sound in the picture. If it is too low, the sound becomes weak or noisy.

Often time can be saved by simply working on the over-all picture i-f response curve. This will work only when the misalignment is relatively minor, but it is good practice to experiment with the various adjustments and see how each one affects the over-all curve. Learn what frequencies are associated with each portion of the curve and you will be able to recognize quickly what effect a coil may be expected to produce.

Take a final look at the over-all sound i-f response by connecting the test equipment as before, but with the sweep and marker connected to the input of the first sound stage. Make any necessary touch-up adjustments to obtain the "ideal" response, or as close to it as possible, then move the scope cable to the output of the discriminator. Check the discriminator curve for center-zero at the i-f sound carrier and for proper linearity. This completes the alignment.

ALIGNMENT IN THE FIELD

41-8. Two alignment procedures can be performed in the customer's home with only a VTVM.

A sound i-f amplifier which uses peaked, not overcoupled, coils can be aligned. Connect the VTVM first to the output of the discriminator, as shown at position (1) of Fig. 41-72. Tune in a reasonably strong station and adjust the fine-tuning control for the best picture, then make a slight readjustment if necessary to obtain zero output on the meter. This places the sound carrier at center-zero of the discriminator.

Now move the VTVM probe to the center of the diode load resistors, point (2) on the diagram. For some receivers a high-value isolating resistor in series with the probe will be needed to avoid detuning the discriminator transformer. About one megohm is sufficient. Peak the sound i-f coils for a maximum reading on the VTVM.

You can adjust the sound traps by

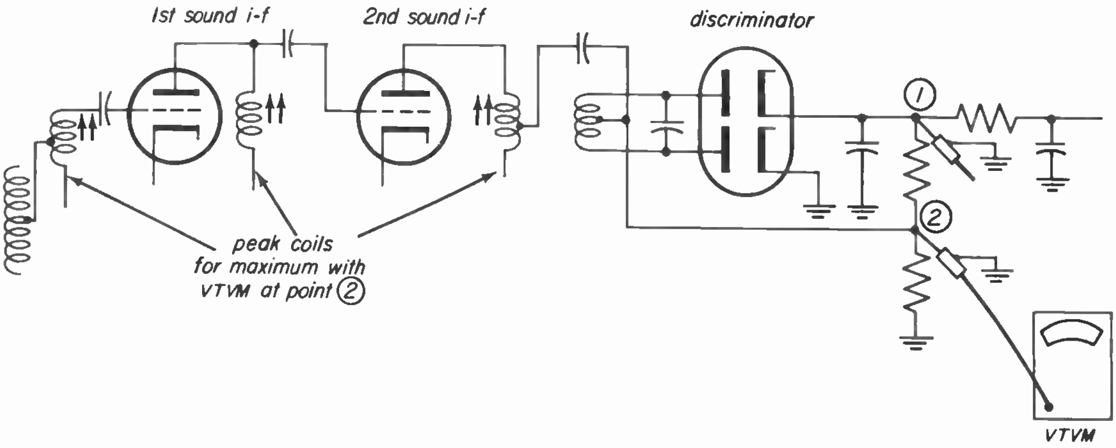

Fig. 41-72

watching the picture on the kinescope. Again, it is necessary first to set the fine-tuning until the discriminator is at center-zero, as indicated on the VTVM connected to the output of the discriminator. Another method can often be used to find the center-zero without an electronic voltmeter. After tuning for the best sound, weaken the signal and introduce noise into the sound by disconnecting one or both antenna leads temporarily. You can hear this noise in the background. Adjust the fine-tuning control until the critical point at which the noise disappears is found. This is center-zero, and the noise, which is amplitude-modulation, cancels out. Leave the fine-tuning at this point and re-connect the antenna leads.

Now look at the picture tube. With the fine-tuning correctly set, there should be no sign of sound in the picture if the traps are functioning properly. If the characteristic sound bars shown in Fig. 41-73 appear, and if the bars are not affected by turning down the volume control, one or more of the sound traps in the picture i-f amplifier probably is detuned. Try adjusting each of the i-f sound traps while watching the kinescope. A point will be found at which the sound disappears from the picture. The i-f traps are then correctly adjusted.

Another type of sound may appear in the picture, caused by the 4.5-mc beat between the picture and sound carriers getting past the 4.5-mc trap. This beat appears on the kinescope as 240 thin diagonal or almost vertical lines. It may be accompanied by horizontal sound bars in a herring-bone pattern, due to FM modulation in the beat. Figure 41-74 shows

Fig. 41-73

Fig. 41-74

these 4.5-mc sound bars. If some of the i-f sound signal gets through the picture i-f amplifier, intentionally or otherwise, the beat is formed in the picture 2nd detector. Some sets permit this, and use a 4.5-mc trap in the first video stage to eliminate the beat. The Philco Model 48-1000 is an example. If this trap is detuned, the beat gets through to the kinescope; the remedy is to adjust the trap until the picture clears up. In other sets, the sound signal is eliminated before it can reach the 2nd detector. If the i-f sound traps are detuned, however, some of the signal may get through. Again, the trouble is corrected by adjusting the sound traps until all sound bars disappear from the picture.

If the receiver is an intercarrier set, a 4.5-mc beat on the kinescope may also be caused by incorrect alignment of the picture i-f amplifier.

Remember that the fine-tuning control must be correctly set before the traps are adjusted, since even in a correctly aligned set sound bars can be produced in the picture by turning the fine-tuning control to the end of its range, and a 4.5-mc beatnote by turning it to the other end.

ALIGNMENT OF AM AND FM RADIOS

41-9. Procedures for aligning AM and FM radios are comparatively simple. A sweep generator which covers the common i-f's for AM and FM sets and has sufficient sweep range is needed. For AM radios, the i-f is usually 465-kc and the pass band varies from 3 kc (ac-dc midgets) to about 16 kc for high-fidelity sets. FM receivers commonly use a 10.7-mc i-f and must accept at least the 150-kc bandwidth transmitted by FM stations (75-kc frequency swing at 100-percent modulation); the generator sweep is ordinarily set at from 250 to 300 kc. Sweep generators covering this range nearly always have built-in markers.

To align an FM receiver using a discriminator or a ratio detector, follow the same procedure as for the TV sound section, with the following modifications:

The i-f and bandwidth are different. (Check the service data.)

Disable the r-f oscillator, either by shorting the tank circuit or by pulling the tube if it is a separate oscillator and all heaters are in parallel. This kills spurious oscillations.

Align the i-f stage by stage, working from back to front, since these stages usually are overcoupled.

The discriminator can be aligned with a scope or with a VTVM.

AM Radios. – In good-quality consoles and high-fidelity AM sets, the bandwidth may be from about 8 kc to 16 kc or more, and it is therefore usually wise to use sweep alignment. Ac-dc sets and midgets, however, usually have single-peak response with a bandwidth of about 3 to 5 kc, so peak alignment is often used. However, it is often possible to get better results by the sweep method. When the response curve can be seen, you can adjust for symmetrical slopes, which reduces distortion.

Figure 41-75 shows the i-f amplifier of a good broadcast console. To align, connect the test equipment as illustrated, set the sweep for a width of about 20 kc and tune the marker to the i-f. Disconnect the antenna, disable the r-f oscillator by grounding the oscillator tuning capacitor, and temporarily ground the AVC bus.

In the case of a biased triode detector, the best way to connect the scope is as shown in Fig. 41-75*b*. Break the cathode lead and connect the scope probe to the cathode, with a 0.5-megohm resistor and a 250-mmf shunt capacitor from probe to ground. It is sometimes recommended that the detector plate load be shorted out, but this isn't always necessary if the power supply has good regulation.

Adjust the secondary trimmer of the last i-f transformer, then the primary trimmer. The response may be either single- or double-peak, depending upon the set. Adjust the trimmers to place the marker at the center, with the curves symmetrical on both sides and with the maximum possible bandwidth. A point will be reached at which the curve suddenly broad-

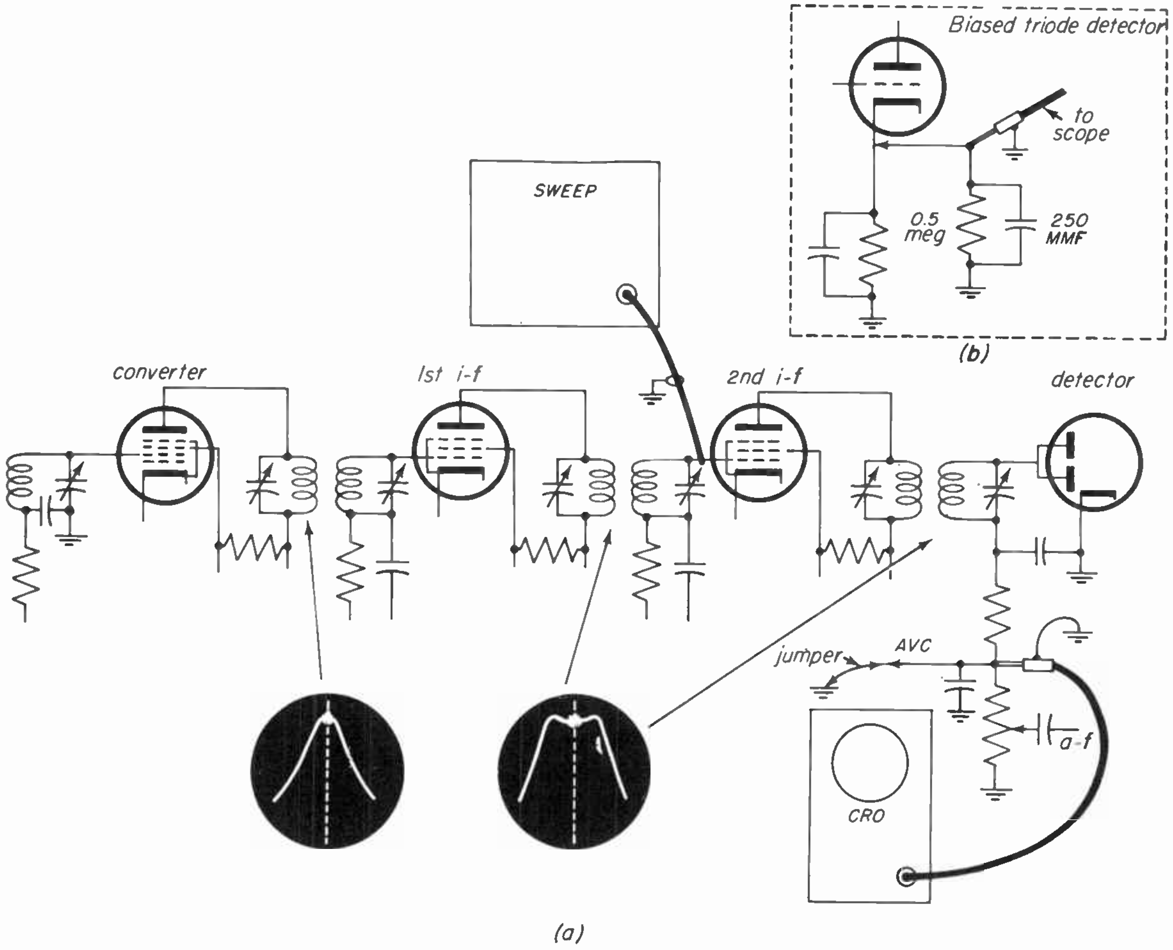

Fig. 41-75

ens out but the amplitude drops rapidly. Make the final adjustment for the best compromise between good bandwidth and reasonable gain.

When the last i-f transformer has been aligned satisfactorily, move the sweep cable to the grid of the first i-f tube and work on the transformer between that and the second i-f stage. Always adjust the secondary trimmer first, then the primary, and do a final touching-up on both.

Finally, connect the sweep cable to the converter grid and align the first i-f transformer. When this has been adjusted, the alignment is complete. Remember to remove the jumpers from the oscillator capacitor and the AVC bus.

When the sweep cable is connected to a point of d-c potential, it is necessary to use a series capacitor, just as in a TV set. A capacitor of about .05 mf is satisfactory for broadcast receivers; in FM sets, use about .01 mf.

The procedure for ac-dc sets is the same as that described above. One caution: the chassis of a midget set is often above ground potential, so a capacitor in series with the scope probe must be used. There may be an a-c ripple on the response curve, but it will not be serious enough to interfere with alignment. If a VTVM is used on the same set for peak alignment, this a-c pickup ripple may make it hard to obtain accurate peak readings.

TROUBLESHOOTING WITH ALIGNMENT EQUIPMENT

41-10. Alignment equipment offers a fast, practical means of locating obscure troubles, particularly those which do not cause variations from normal circuit voltages. For instance, a set may be operating correctly, but not as well as might be expected. If all the voltages check correctly, the trouble must be localized to one stage. Alignment equipment is ideal for this, since it enables you to identify frequency, response shape, and amplitude or gain.

Stage-by-Stage Checks. – The crystal detector probe, described and illustrated earlier, is very useful for this work, since it makes it possible to place the scope in any circuit and obtain a response curve. For this purpose, the 220-ohm input resistor shunted from probe tip to ground detunes and damps out the effect of the circuit into which the scope is connected. Connect the probe one stage after that to be observed.

For stage-by-stage checks, begin with the scope connected to the output of the picture 2nd detector (the crystal probe is not needed here) and the sweep connected to the grid of the last i-f tube. The marker can be coupled to the grid of the converter, where it is out of the way. After checking the response of the last i-f stage, a rough gain check can be made as follows:

1. Temporarily connect the sweep to the input of the picture 2nd detector.

2. Adjust the scope gain and the sweep output until the highest point on the curve is an inch from the base line. This is best done with the graph screen in place on the CRO; 10 small divisions on most screens equal one inch. If you don't have a screen or don't want to use it, you probably can estimate closely enough for practical purposes. Do not move the gain vernier or the sweep output controls again until the gain check is finished.

3. Re-connect the sweep to the grid of the last i-f stage.

4. The curve probably will run far off the face of the scope. Use the vertical gain selector, not the vernier, to reduce the scope gain until the entire curve is visible. Most scope gain selector switches attenuate the input signal ten times on each successive step On these scopes, moving the switch one step will bring the curve back on the screen. On scopes with different ratios, determine how many times the signal must be attenuated to bring back the curve.

5. Measure or estimate the height of the new curve in inches from base line to peak.

6. Multiply the amount of attenuation required to bring the curve back on the screen by the height in inches of the new curve. The result is the approximate gain of the stage. This gain can be checked against the manufacturer's figure. If the service data does not specify gain, it's safe to assume that the gain should be between 8 and 25.

As an illustration, assume that the curve goes off the screen of the scope, as expected, and we must turn the vertical gain selector one step to bring it back. This is an attenuation ten times the original. The new curve is an inch and a half in height. The stage gain, then, must be approximately 10 x 1½, or 15.

After the gain of the last i-f stage has been checked, attach the detector probe to the scope cable and connect it at the input to the picture 2nd detector. Leave the sweep generator connected to the grid of the last i-f stage and adjust the sweep output and scope gain vernier for a one-inch curve, as described above. Move the sweep cable to the grid of the next-to-the-last i-f stage and check the gain of this stage by using the step gain attenuator to bring the curve back on the screen.

When the gain of the next-to-the-last stage is known to be correct, the individual response curve can be examined by bringing the detector probe to the grid of the last i-f stage.

Continue back to the first i-f stage, checking gain and response. This method of calculating gain uses the gain of one stage to calibrate the scope (setting the curve one inch high), then measures the extra gain of the next stage as the sweep connection is moved forward. When looking at the individual response curves, instead of moving the sweep and scope ahead a stage, we simply set the curve at one inch, move the sweep, read the gain of the next stage, then move the scope.

Gain alone may be determined using only the scope. Connect the antenna to the set and tune in a channel with a signal of average strength. Calibrate the vertical amplifier of the scope for peak-to-peak voltage measurements. This procedure was described in a previous lesson. Measure the voltage at the grid of the stage in question, then the voltage at the grid of the following stage. Divide the second reading by the first to obtain the stage gain. Don't make the second measurement at the plate of the suspected stage, since this gives only the gain of the tube. Use the detector described previously with the scope probe.

Stage-by-stage checks of response are extremely helpful for locating such defects as an open bypass capacitor not affecting the d-c voltages. Such a defect causes a shift in frequency of the stage response and a loss of gain, both of which show up when alignment equipment is used. When such symptoms are found, check the bypass capacitors by shunting them with good capacitors. If a capacitor is all right, the response curve will remain the same. If it is defective, the peak will shift frequency and the gain will increase.

In sound i-f amplifiers, an open bypass capacitor has the same effect – loss of gain and frequency shift. The apparent result is weak sound. The bad stage may be retuned so that the gain increases, but it will not reach normal. The stage is then actually tuned to the wrong frequency, and if the bad capacitor is replaced by a good one, the sound will again become weak. By checking the response curve of the stage, we can be certain whether or not the stage is detuned.

Stage-by-stage checks also make it possible to locate such defects as a cathode resistor of the wrong value, or an incorrect value of damping resistor. These damping resistors are critical; even a resistor of the next standard size will change the response. An open plate coil shunted by a damping resistor often will not affect the d-c voltages appreciably, but it may change the frequency and gain. Such changes are easily located by a check of individual stages.

In addition to the use of a crystal probe on the scope, stage-by-stage checks can be made in two other ways.

In the first method, the sweep generator is connected to the grid of the last picture i-f stage, then moved forward stage by stage. The first response curve is that of the last i-f stage, the second curve is a combination of the responses of the last and next-to-last stages, and so on. Sometimes these curves are given in the service data. If not, it takes only a few minutes to draw them by running through the procedure on several receivers known to be in good operating condition. By copying the curves, a collection of the proper response curves for receivers most often serviced can be obtained.

The second method involves damping out the response of each stage except the one to be checked by connecting 300-ohm resistors across the picture i-f coils. The sweep generator and marker may be connected either to the antenna terminals or to the grid of the converter, and the scope to the output of the picture 2nd detector. If, for example, the response of the third i-f stage is desired, the damping resistors would be connected across the coils of all the other stages.

The stage-by-stage check is also useful in checking video gain and frequency response. To check the response of the video amplifier, connect the equipment as shown in Fig. 41-76. Be sure to use a crystal detector probe on the scope cable. For this use the probe should have about the same capacitance as the input capacitance at the grid of the picture tube; this puts the same loading on the video output stage as it has in normal operation. The kinescope can be pulled and the probe connected to the grid terminal of the kinescope socket. The probe circuit shown in part *b* of the drawing is satisfactory in most cases.

Set the sweep generator to cover the video range; 0 to 6 or 8 mc is ample. The response seen on the scope should appear similar to that of Fig. 41-76, except that a tail may appear on the high-frequency

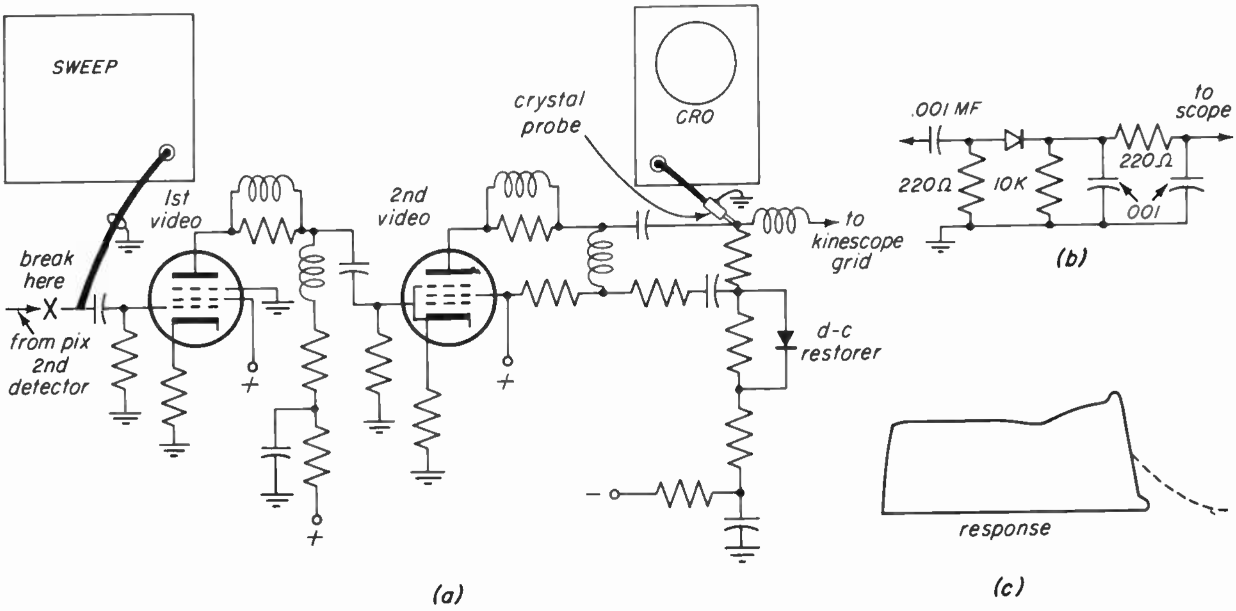

Fig. 41-76

end if the sweep width is considerably more broad than the actual response.

Video gain can be checked by either of the methods previously described.

Alignment equipment can be used on the r-f amplifier or the converter stage alone to locate difficult troubles, such as poor response on one channel not due to ordinary mis-tuning. One coil may be shifted in frequency but still producing the correct curve shape, due to the coil having been miswound, bent out of shape etc. The coil responsible can be quickly isolated with alignment equipment. If an r-f curve on Channel 2 appears badly tilted, check the high-pass filter, which may be cutting into it. On the channels nearest the FM band in your area, the same tilt may be caused by an FM trap.

Locating Intermittents. – The sweep generator and scope offer a fast and reliable means of localizing intermittent troubles. This method is often referred to as "tap testing". The equipment can be used stage-by-stage or simply set up to give the over-all picture i-f response curve. To test, tap the tubes, i-f cans and all components, including wiring, with the eraser end of a lead pencil, watching the curve on the scope. Use a firm pressure, enough to jar the component somewhat. Never use a pencil without an eraser, or any other type of instrument that may damage the tube. The eraser cushions the blows, preventing damage. Tap each component three or four times, and if possible, from more than one direction. A tube, for example, should be tapped on the top and around the sides.

Tapping a good component causes no noticeable change in the curve on the scope. When an intermittently bad part is struck, however, the curve will jump or quiver, or oscillations appear.

This method may be used in the r-f section to locate such troubles as a loose coil, or in the sound i-f amplifier and discriminator. The video amplifier can be checked by setting up the equipment as in Fig. 41-76.

A check for intermittents can be made anywhere a waveform can be obtained on the scope. This means that by connecting an antenna to the set and feeding in a TV signal, the scope can be connected at the horizontal or vertical output, checking the associated sync and deflection circuits. In this case, of course, the sweep generator is not necessary

◆

NOTES

NOTES

TELEVISION SERVICING COURSE

PREPARED BY

RCA INSTITUTES, INC.
A SERVICE OF RADIO CORPORATION OF AMERICA

HOME STUDY DEPARTMENT
350 West 4th St., New York 14, N. Y.

LESSON FORTY TWO

REDUCING INTERFERENCE

42-1. Where Interference Comes From
42-2. How Interference Enters the Receiver
42-3. What Interference Looks and Sounds Like
42-4. Devices for Eliminating Interference
42-5. Practical Interference Elimination
42-6. Interference in AM Radios

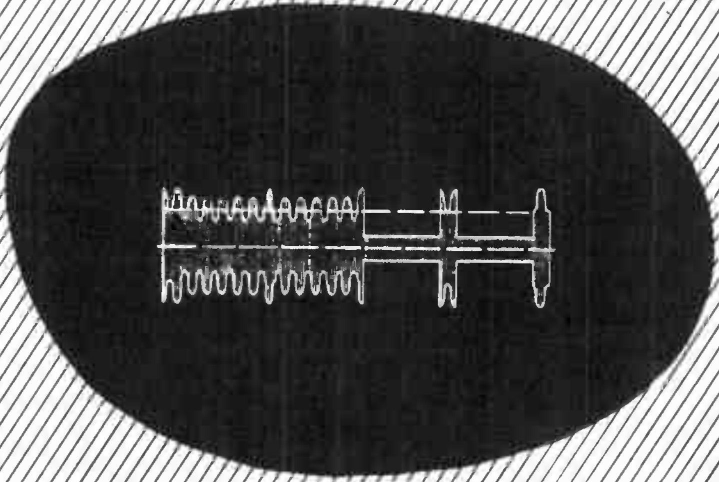

Lesson 42

INTRODUCTION

For the purposes of this Course, interference is defined as unwanted electrical energy in the receiving installation which reduces the quality of the picture or sound reception. Under this definition, it does not matter what the source of the interfering energy is, nor what path it takes in entering the receiver; it is still classed as interference. The problem of interference to good television reception is sometimes troublesome, particularly in densely populated areas. This lesson has many photographs of different types of interference. The purpose of these pictures is to show what various types of interference look like on the kinescope screen so that they can be recognized easily, as an aid to eliminating the cause of the interference in the receiver.

WHERE INTERFERENCE COMES FROM

42-1. Interference Produced by Television Receivers. – Television receivers can produce interfering signals of several kinds, that can be conducted or radiated to other receivers nearby. Such interfering signals are usually found to be one or more of the following four kinds: radiation from the local oscillator in the r-f unit, horizontal drive circuit radiation, harmonic radiation from the sound i-f amplifier, or radiation from the picture i-f amplifier. In some cases only the fundamental oscillator frequency may be responsible for the interference; in others, harmonics may be to blame. In any case, it is best to consider both fundamental *and* harmonics when attacking a serious interference problem.

Local Oscillator Interference. – The local oscillator in a television receiver may be a frequent source of interference in other TV receivers nearby, because of the frequency relationship between the various television channels. In most makes and models, the oscillator operates at a fundamental frequency equal to the *sum* of the incoming picture frequency and the picture i-f frequency. Thus when a set having a 25.75 mc picture i-f frequency is tuned to Channel 2, its local oscillator is at 81 mc. If radiation from the oscillator reaches nearby receivers tuned to Channel 5 in sufficient strength, it will cause interference. This kind of interference can occur on several other channels in a similar way, depending on the actual frequencies involved. This, and other important frequency relationships affecting television reception and interference problems can be seen plotted in the frequency spectrum chart of Fig. 42-1.

Complete details of the example given above and similar ones are given in Section 5 of this Lesson, where methods for eliminating their effects are presented.

Horizontal Deflection Circuit Interference. – This circuit occasionally causes interference in nearby AM broadcast receivers, due to the fact that strong harmonics of the fundamental 15,750 cps deflection frequency are present. Such harmonics may be radiated from the chassis, line, or antenna, but more frequently are coupled through the power line. Due to the considerable power required in deflecting large, high voltage kinescopes in modern television receivers, the harmonics are strong enough to cause interference well up into the broadcast band, although they are usually strongest in the lower frequency part. They are exact multiples of the deflection frequency, and thus appear spaced every 15.75 kc. When a harmonic of suitable frequency reaches the affected AM receiver with sufficient strength, a clear whistle called a beat or heterodyne is produced. This is the 'difference' frequency between the broadcast station tuned in and the deflection circuit harmonic. Thus in the New York area, the 38th harmonic of the deflection circuit (567.0 kc) can produce a 3 kc beat in nearby AM receivers tuned to WMCA on 570 kc.

SOURCES OF TELEVISION INTERFERENCE

(MODIFIED FROM CHART PUBLISHED BY ELECTRONIC INDUSTRIES)

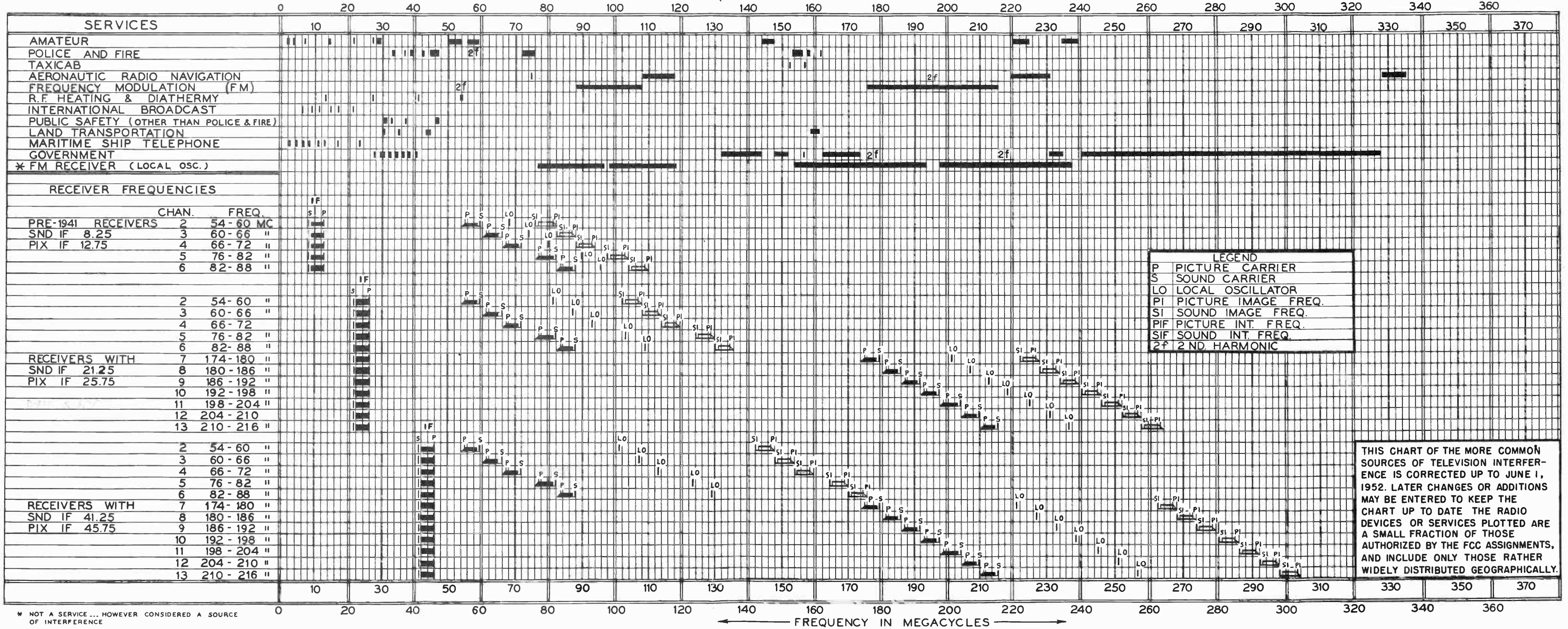

THIS CHART OF THE MORE COMMON SOURCES OF TELEVISION INTERFERENCE IS CORRECTED UP TO JUNE 1, 1952. LATER CHANGES OR ADDITIONS MAY BE ENTERED TO KEEP THE CHART UP TO DATE. THE RADIO DEVICES OR SERVICES PLOTTED ARE A SMALL FRACTION OF THOSE AUTHORIZED BY THE FCC ASSIGNMENTS, AND INCLUDE ONLY THOSE RATHER WIDELY DISTRIBUTED GEOGRAPHICALLY.

Fig. 42-1

Sound I-F Interference. – The sound i-f amplifier sometimes causes interference in the picture of the same receiver, by radiation of harmonics. These are generated in the last stage or stages of the sound i-f amplifier by normal action of those circuits, and sometimes get back into the front end by radiation or stray coupling. If strong enough as compared to the picture carrier of the affected channel, the harmonic will appear as typical FM interference in the picture. As an example, a set tuned to Channel 3 may be interfered with by the third harmonic of its own 21.25 mc sound i-f, which naturally falls at 63.75 mc, well within the picture passband for that Channel. The effect produced in the picture can be seen in Fig. 42-2.

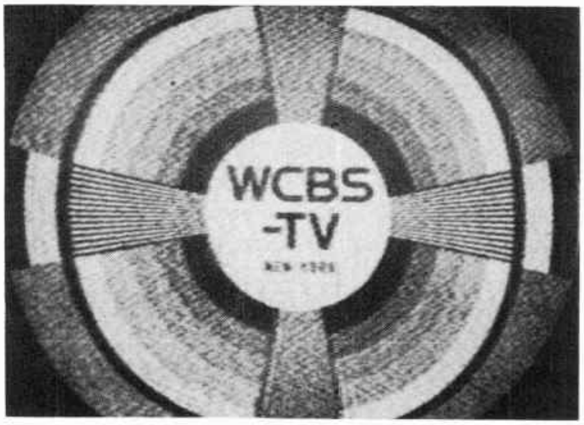

Fig. 42-2

Picture I-F Interference. – A similar condition exists in the picture i-f amplifier circuit. As in the sound i-f, the desired incoming signal must be amplified to a relatively high level, in order to produce a satisfactory picture. Also, the i-f picture carrier must be demodulated by the picture detector, and the demodulating process generates harmonics of the picture i-f. Certain of these harmonics can cause interference in the same or nearby receivers, on certain channels. The third harmonic of the 25.75 mc picture i-f is 77.25 mc, which falls in the Channel 5 r-f passband. An example of the effect produced in the picture is shown in Fig. 42-3. In extreme cases, this kind of interference may affect other nearby receivers tuned to an appropriate channel.

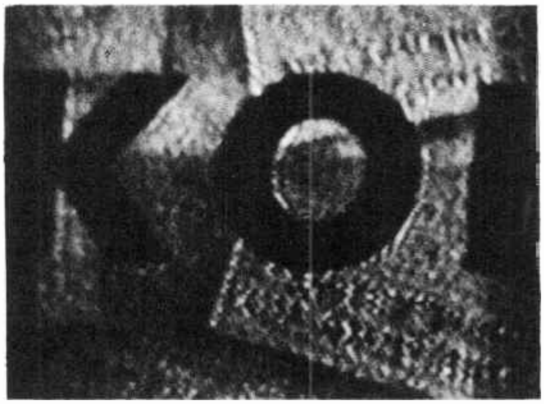

Fig. 42-3

FM Receiver Local Oscillator Interference. – The local oscillators of FM receivers tuning the standard FM broadcast frequencies (88 to 108 mc) sometimes cause interference in television receivers. In most such sets, the local oscillator operates either 10.7 mc above or below the incoming FM signal. Oscillators operating below the signal can cause interference in Channels 5 and 6 on their fundamental frequency, which falls within the r-f passband of the TV receiver when tuned to those channels. Oscillators operating above the incoming carrier can cause interference on Channels 2, 3, and 4, by image response in the TV receiver. In addition, it is possible for the second harmonic of FM receiver oscillators to cause both direct and image interference in TV receivers tuned to Channels 7 to 13 inclusive. Second harmonic radiation is generally much weaker than the fundamental, and the chance of interference on the upper channels is thus smaller than in channels affected by the fundamental, but the possibility should not be overlooked. The frequency chart of Fig. 42-1. will make the relationships clearer.

Communications Transmitters. – There are many thousands of radio communications transmitters of various radio services, such as police, taxi, amateur, ship-shore etc. Harmonics above the carrier frequency may be produced occasionally in the final amplifier and these may be radiated. When the carrier frequency of the station is known, the possible harmonics that may be causing interference can be calculated by simple arithmetic. Thus, if a transmitter on 45.98 mc is known to cause interference on Channel 4, (66-72 mc) the difficulty may be caused by radiation of third harmonic of a doubler stage driving the final amplifier. Such a doubler would be driven by a preceding stage on 22.99 mc, whose third harmonic would fall at 68.97 mc, well within the Channel 4 passband. The actual appearance of such interference would depend on whether the responsible stage was modulated or not, the strength of the radiation, and similar factors. Two examples of such transmitters using frequency multiplier stages are shown in the block diagrams of Fig. 42-4.

It is worth adding that bad joints in conductors such as water pipes or wire fences may occasionally generate harmonics of a very strong radio frequency, and radiate them enough to cause interference. This sort of harmonic generation is most likely to occur near a powerful transmitter.

Interference From Noise Sources. – A great number of different kinds of radio and electrical devices produce electrical disturbances of the kind called noise; that is, of a more or less random kind, usually mixtures of many frequencies and amplitudes. Such noise can cause serious interference, particularly with AM transmissions such as television picture signals. Of these noise sources, motor vehicle ignition systems are probably the most common offenders. However, neon signs, cash registers, elevator motors, power line insulator leaks, sterilizing lamps, arc and fluorescent lighting systems, and many other devices can also cause severe interference under certain conditions. Even a television set can cause such trouble, if there is a point in the set where a high voltage arc can occur. The interference produced by such sources is fairly easy to distinguish from those described in earlier paragraphs, because of the more random, unsteady nature of the picture or sound defect they produce. This can be seen in the pictures of Fig. 42-5, which show such noise interference.

If you know that the noise is from ignition, the next step is to find out how it is getting into the receiver. If the antenna is fairly near the street level, it may be picking up the noise. On the other hand, if the antenna is fairly high, chances are the transmission line is the cause. It is even possible that the power line is bringing it in, or that it is being picked up on the receiver chassis directly, but these are less likely examples. You can test to see how the noise gets in by disconnecting the transmission line from the receiver input terminals. If there is little or no change in the noise pattern, go a bit further.

Short (connect) the transmission line conductors together, and connect the junction to some ground, such as a water or steam pipe. This will pretty definitely eliminate the possibility that the receiver end of the line is radiating the noise to the receiver chassis. If the noise persists, it must be getting in through the power line, or by direct pickup. (We're assuming you already know the receiver itself is okay.) If removing the line removes or greatly reduces the noise, maybe it is being picked up on the line, in the antenna, or in both. The next step is to reconnect the line to the receiver in the normal way, and disconnect it from the antenna, leaving the conductors open circuited at the antenna end. If the noise is about the same, or is reduced only a little, it is being picked up in the line. This is by far the most common way in which ignition noise gets in when line is used, because such twin-lead lines are not shielded, and cannot be kept in perfect balance.

In order to minimize the noise, the remedy may be to route the line by another path, if the interference is serious enough to justify the work. Also, it's worth remembering that keeping the line properly twisted between standoffs, and well clear of conductors helps to minimize noise pickup in it. Keeping the horizontal portion of the line as short as possible will also help, particularly if that part must be near the street, where the noise originates.

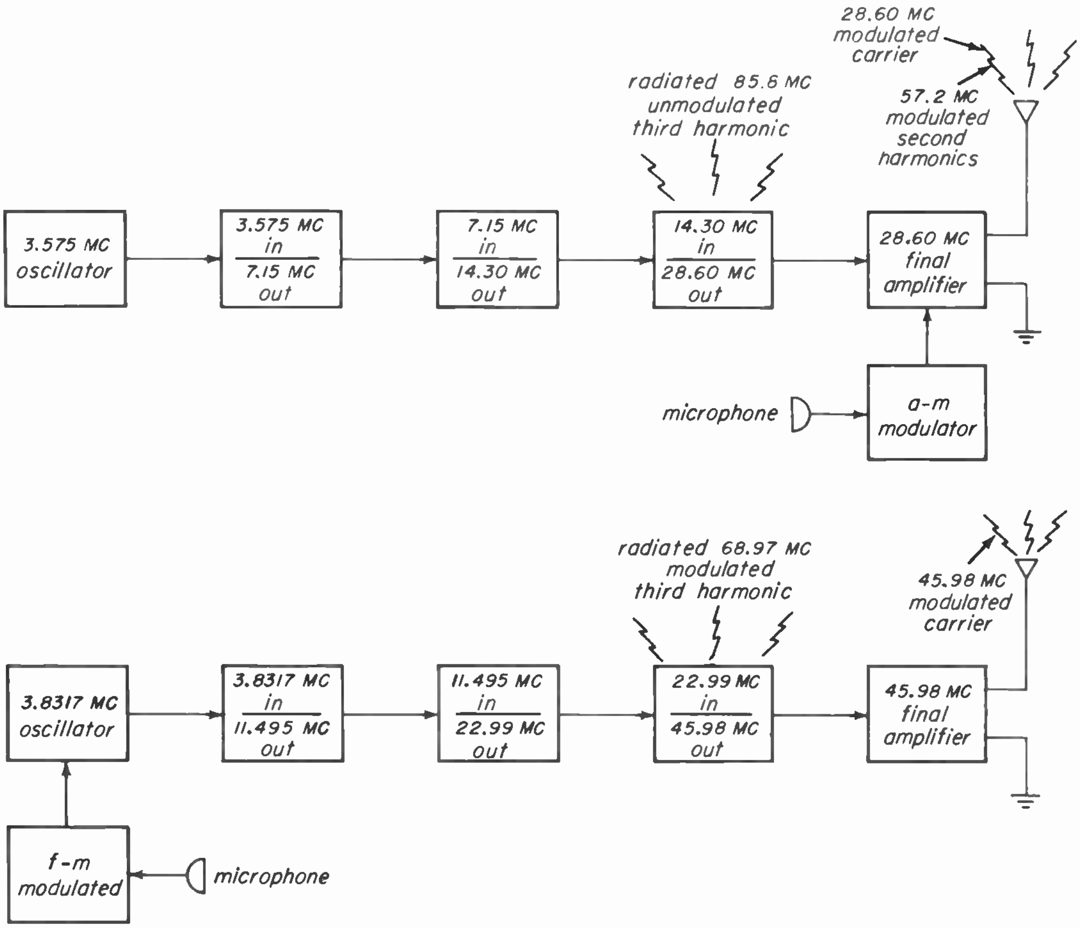

Fig. 42-4

Excessive Signal Strength. – Ordinarily any radio receiver has a limit as to the strength of the signals it can receive without distortion. Television receivers are no exception, and in fact are somewhat more likely to be so affected than ordinary AM radios, because of their greater sensitivity and bandwidth. As a result, TV receivers located relatively near the antenna of a transmitter are frequently troubled by interference, even when the transmitter is operating properly.

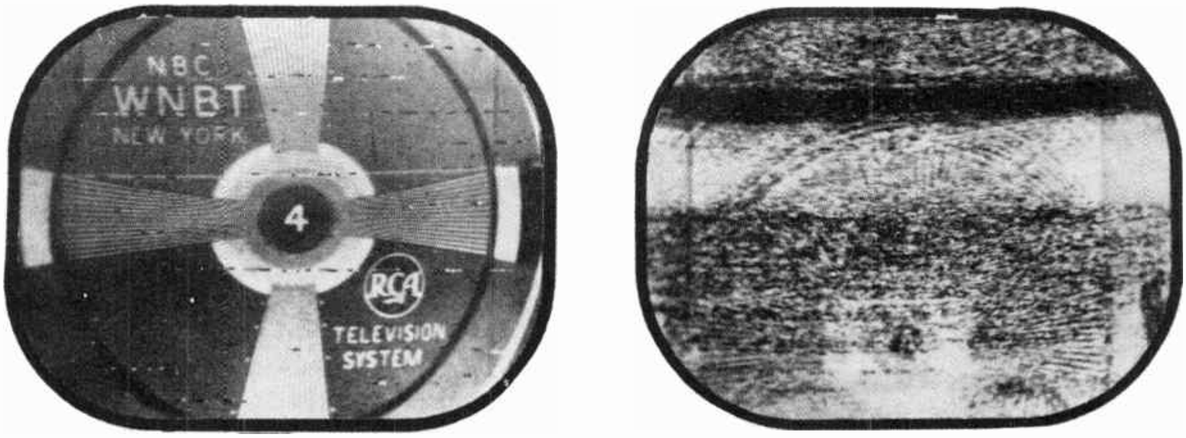

Ignition Noise

Electrical Appliance Interference

Fig. 42-5 (Reprinted by permission of *Electronics*)

This can happen even when the assigned frequency of the transmitter is nowhere near the frequency of the channel to which the TV receiver is tuned.

Cross-Modulation. – The basic reason for this is the same in all cases; excessively strong signals reaching the grid of the TV receiver r-f amplifier tube cause the stage to operate nonlinearly. When this happens, harmonics of the interfering signal are generated, and one or more of these harmonics of the interfering signal may fall within a television channel. Not only that, but other signals present at the grid of the r-f tube will also be affected, by a process called cross-modulation. This term refers to the basic phenomenon by which two or more sine waves of differing frequencies applied to a nonlinear circuit element combine to produce harmonics of themselves, and also sum and difference frequencies. The frequency conversion (mixer) stage of every superheterodyne receiver depends upon this principle.

Cross-modulation actually occurs *whenever two or more frequencies are applied to a nonlinear circuit element,* such as a rectifier, or an overdriven amplifier stage. It does *not always* cause noticeable interference, however, because the resulting harmonics and sum and difference frequencies may not fall within the band that can be passed by the following stages of the receiver, or they may be so weak compared to the desired signal that they produce no visible or audible effect in the receiver output. The exact result varies greatly from case to case, and depends on the design of the receiver input, and the strengths of the signals involved. One aspect of the effect is likely to be confusing, if it is not understood.

Only *one* signal of the many reaching the input grid need be excessively strong in order for cross-modulation to occur. Furthermore, the excessively strong signal may appear in the receiver *only as a cross-modulation product with certain other signals*, and not directly by itself. The nonlinear operation produced in the r-f amplifier by such an excessive signal may cause other signals of normal strength to cross-modulate each other, with the result that some combination of their sum or difference frequencies may fall within the picture or sound i-f passband.

When this happens, it is possible to suspect the wrong signal of causing the difficulty. As an example, consider the case of a receiver located very near a powerful shortwave broadcasting station transmitting on an assigned frequency of 15.34 mc. The fundamental signal from this station is so strong that it causes cross-modulation in the receiver r-f stage. One of the products of this cross-modulation is the fourth harmonic of the shortwave station, 61.36 mc, which is in Channel 3, only 0.11 mc away from the Channel 3 61.25 mc picture carrier. Suppose the Channel 5 television picture carrier is also strong. The difference frequency between it and the shortwave station is 61.91 mc, also well within the Channel 3 passband. It is quite likely that Channel 5 will appear on Channel 3, along with various other picture defects.

Cross-modulation interference derives its name from the fact that the modulation, usually picture modulation, of one channel appears on another channel. It has the same visual symptoms as adjacent channel interference. Sometimes it appears as a c-w beat, line pattern. Sometimes the horizontal blanking bar of one station is superimposed over the picture of another station. The bar moves across the screen like a windshield wiper. It may also be possible to distinguish the entire picture of one station superimposed over that of another station, as illustrated in Fig. 42-6. One of the pictures will be out of sync and therefore in continuous motion.

Problems of the kind involving more than one signal can be complicated because of the number of sum and difference frequencies and harmonics involved. In most cases, however, the presence of at least one very strong signal is likely, and should be investigated. Fortunately, trouble of this sort is almost always confined to small areas surrounding a powerful transmitter, or in the radiated beam of a directional antenna fed by such a transmitter.

One form of cross-modulation interfer-

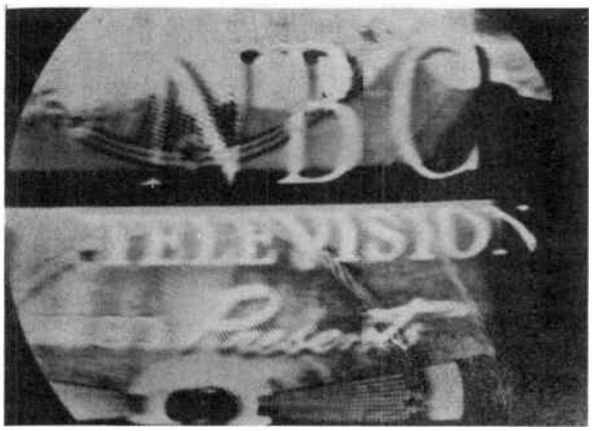

Fig. 42-6

ence merits separate consideration. This occurs when the television receiver is so near one or more television transmitters that it receives an excessive signal on one channel, even when tuned to some other channel. This is illustrated in Fig. 42-6. This is sometimes the case where some receivers are located near a television transmitting antenna. In this case, no additional strong signal is involved. The cause can usually be identified by switching the receiver to an unoccupied channel adjacent to the channel of the station suspected of causing the difficulty. When this is done, the suspected station's picture can usually be seen fairly well.

Double conversion. – If the signal *from the local oscillator* of the TV receiver can reach the grid of the r-f amplifier tube with considerable strength, the effect known as double conversion can occur.

This happens because even a good r-f amplifier stage may be slightly nonlinear under certain conditions, enough in fact to permit some cross-modulation of incoming signals to take place. If signal from the local oscillator reaches the r-f stage grid in sufficient strength, it can cross-modulate with an incoming signal at that point. As explained earlier, this cross-modulation process is the same as the frequency-converting process that takes place in a regular mixer stage. When the local oscillator signal is cross-modulating with an incoming signal in the r-f stage as described above, the set has, in effect, *two* converter stages. This double conversion process can cause interference trouble where the signals are strong enough, and the frequency relationships are correct.

For example, where Channels 5 and 7 are active, sets tuned to Channel 5 may be interfered with by Channel 7 sound in the picture, if the Channel 7 signal is fairly strong compared to Channel 5. This happens as follows: When the set is tuned to Channel 5, the local oscillator is operating at 103 mc. This signal combines with the 179.75 mc Channel 7 sound signal in the r-f stage, and produces sum and difference frequencies of 282.75 mc and 76.75 mc, which are passed on to the converter stage. The 282.75 mc sum frequency is far outside the passband of the converter stage, and is bypassed to ground, but the 76.75 difference frequency is *within* the passband, since the stage is actually tuned to Channel 5, and thus reaches the grid of the converter. Here it combines with the 103 mc oscillator signal *again*, producing sum and difference frequencies of 179.25 mc and 26.25 mc. The higher frequency is outside the picture i-f passband, but 26.25 mc is within the passband, and shows up as an FM signal in the picture.

FM Image Interference. – Image interference can occur because there are actually two frequencies that can be combined with the local oscillator frequency of a superheterodyne receiver to produce the intermediate frequency; one above, and one below the local oscillator frequency. Thus in a receiver with a 25.75 mc picture i-f, a signal 25.75 mc above or below the frequency of the local oscillator will produce a difference frequency that will fall in the i-f channel. If the receiver is tuned to receive TV Channel 2, the local oscillator will be on 81 mc, and an FM station on 106.7 mc will produce an interfering signal at 25.7 mc, if it reaches the mixer stage of the TV receiver at sufficient strength. Even though the r-f stage selectivity and the FM trap act to greatly reduce the strength of the FM signal reaching the mixer stage, interference can still occur when the receiver is near the FM transmitting antenna.

Diathermy Interference. – Diathermy is a treatment used by many doctors and hospitals. Essentially, it is a way of increasing the temperature of a part of the body by application of a radio frequency electric field. The apparatus used for generating the necessary r-f field is actually very similar to a crude radio transmitter, and usually consists of a push-pull oscillator capable of generating r-f power up to perhaps 500 watts or so. The frequencies assigned by the FCC for diathermy equipment are in bands as follows:

13.553 mc to 13.566 mc	center frequency	13.560 mc
26.957 to 27.282	" "	27.120
40.659 to 40.700	" "	40.680

These frequency assignments were only placed in effect on July 1st, 1952, however, and some diathermy equipment made before that operated on somewhat different frequencies, near, but not necessarily in the bands listed above. All diathermy equipment actually used after 1 July 1952 is required by FCC regulations to stay within the frequency bands stated above. In addition, requirements as to filtering and suppression of harmonics and radiation are more rigid. Even so, it is certain that some interference will still be caused by diathermy equipment. Unfortunately, many doctors have offices in residential buildings where there are many television receivers close at hand. When treatments are being given, it is very likely that there will be some radiation of at least the fundamental frequency of the diathermy energy. This can generate harmonics in TV set r-f amplifier as explained under cross-modulation above, and one of the harmonics may fall within the passband. Where this is the case, complete elimination of the interference may be very difficult. A typical case of diathermy interference is shown in Fig. 42-7.

The equipment used for r-f heating in many industrial processes is very similar to diathermy apparatus, but operates on different assigned frequencies. It is usually much more powerful than even the largest diathermy set, and may actually range up to 100 kilowatts, or more. Such equipment is almost invariably located in industrial areas, however, where there are relatively few TV receivers near it. Also, the assigned frequencies (13.56, 27.12, and 40.68 mc) are relatively far removed from the television channels, and most such equipment is rather carefully designed to reduce radiation to a minimum, as such radiation is merely waste, so far as the purpose of the equipment is concerned. As a result, interference from such r-f heating equipment is seldom serious.

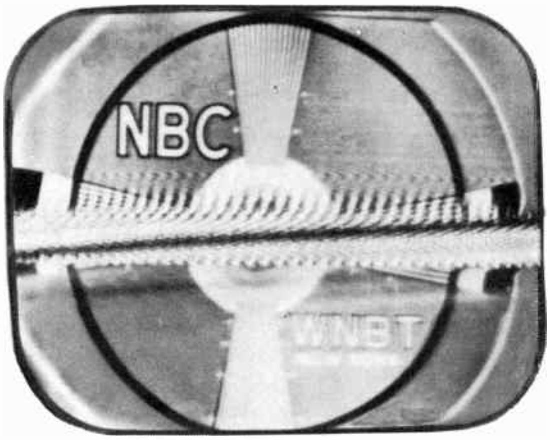

Fig. 42-7

Aircraft marker beacons. In regions near airports, marker beacons operating on 75 mc sometimes cause interference in nearby television receivers. This source of interference is not very common, but should not be forgotten when the receiver in question is near an airport.

Co-channel interference. Due to the limited number of television channels available, the same channel is frequently assigned to stations separated by 150 miles or more. This is normally possible because radio transmission at frequencies above 30 mc are not effectively reflected by the ionesphere, and do not bend around the curvature of the earth's surface enough to be received much behond the horizon, as seen from the transmitting antenna. In exceptional locations, however, and under certain atmospheric conditions, two stations on the same assigned channel may interfere. The trouble is usually easy to identify, and can frequently be cured by careful orientation of a directional antenna. The amount of interference from this source often varies considerably with propagation conditions, particularly when both stations are fairly distant from the receiver. An example of the effect in the picture is shown in Fig. 42-8.

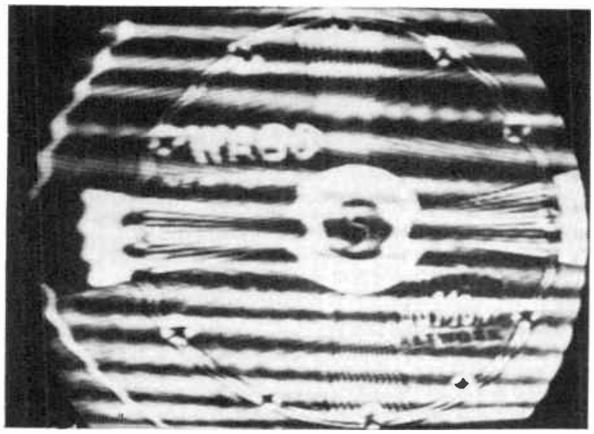

Fig. 42-8

Propagation Effects. – The way in which the picture and sound signals are propagated from the transmitter to the receiver can frequently result in picture or sound defects. Most defects of this sort occur because the signals arrive at the receiving antenna by two or more paths, instead of one. In the case of the picture signal, multipath reception of the sort described result in the familiar ghost images.

In the case of the FM sound signal, multipath reception can produce serious distortion, even when sound and picture signals are of better than average strength. In cases where multipath sound distortion occurs, it is common to find that careful adjustment of the fine tuning will disclose one setting where sound quality is fairly good. This adjustment is usually so critical that the slightest drift in tuning brings back the distortion. As a result, customers are likely to blame the receiver, unless the true cause can be demonstrated to them. Sound distortion due to multipath reception results from the same kind of reflection phenomenon that causes ghost images, but is less common.

The exact way in which the direct and reflected signals combine in the receiver is rather complex, because the frequency of the FM carrier changes rapidly during modulation. For practical purposes, it can be thought of as due to the phase difference between the direct and reflected signal at the receiving antenna. For a steady carrier, this phase difference would be constant, but when the FM carrier frequency changes with modulation, the phase difference between the direct and reflected wave also changes, so that at certain instants in the modulation cycle, the waves tend to cancel, and at other instants to reinforce each other. It is this phenomenon that is mainly responsible for the distortion.

In attempting to minimize multipath sound distortion, the exact phase relationship between direct and reflected waves seems to be somewhat more important than the amplitude relationship. As a result, moving the antenna horizontally or vertically a few inches or feet is frequently more effective in reducing the trouble than reorienting the antenna without changing the actual location.

Miscellaneous interference sources. – Several other causes of interference are known, which give trouble only rarely. Among these are such things as defective power line insulators, radio operated door-opening devices, sterilizing lamps, ozone generators, and similar devices. The radiation from such devices usually produces noise interference patterns in the picture, often with a strong 60 or 120-cycle component that will produce a horizontal bar or bars in the picture. The pictures of Fig. 42-5 are typical.

It is not practicable to try to list all the radio and electrical devices that can cause occasional interference, as new ones are being developed and marketed almost daily. As a result, it is necessary to consider the possibility of some unfamiliar device as the interference source, when tests for the more common causes fail to solve a particular problem. Among these are ordinary incandescent lamps, particularly very old-style bulbs, various small electrically operated hand and power tools and appliances, electric heating pad and blanket thermostat controls, liquid level gauges, etc. In general, interference from such sources looks like the examples of Fig. 16-5, the 60 and 120-cycle bars being common.

HOW INTERFERENCE ENTERS THE RECEIVER

42-2. Interfering electrical energy can enter the receiver by several paths, and in the case of extremely strong interference, is usually found to be entering by more than one path at a time. In order to reduce or eliminate the interference effects in picture or sound, it is necessary either to block the path or paths by which it enters, or stop it at the source. Since in most cases, the receiver is far more accessible to work on than the source of the interference, it is usually more practical to try blocking the entrance paths than to stop the interference at the device producing it. Obviously then, it is essential to know by what paths the interfering signal is entering, as well as effective methods for protecting each path from the interference involved.

Interference Within The Receiver R-F Passband. – In order to provide satisfactory reception, the r-f stage bandwidth of the receiver should be about 6 mc. This relatively wide passband as compared to AM and FM broadcast receivers offers a rather large target for interference. Obviously any signal on a frequency within the passband of the r-f amplifier will be amplified along with the desired signal, so the amount of interference caused will depend almost entirely on the relative amplitudes of the picture and sound television carriers and the interfering signal.

Consider, for example, the case of a television receiver tuned to Channel 3. The r-f stage will accept and amplify signals of any frequency between 60 and 66 mc with reasonable efficiency. A shortwave broadcasting station on 15.150 mc may radiate only a very small amount of fourth harmonic energy on 60.6 mc, but may nevertheless cause interference, because this radiation falls within the passband of the receiver. Such fourth harmonic interference may occur because it is generated and radiated from the transmitter, by external cross-modulation, or in the receiver input stage. Whatever the cause, the interfering signal is within the receiver passband when it is tuned to that channel, and can produce interference if it is strong enough in proportion to the desired signal. Study of the frequency spectrum chart of Fig. 42-1 will reveal many authorized radio services whose harmonics fall within the television channels. These must be considered when the tests described in Section 42-5 show that the interference frequency lies within the passband of the channel concerned. It is also important to remember that sometimes devices not meant to generate r-f energy may accidentally produce some frequency components that fall within the r-f passband.

Interference Within The I-F Passband. – Direct interference on any frequency within the passband of the picture or sound i-f amplifiers of the receiver is also possible, although not as common as interference in the set's r-f passband. Signal may be picked up on the i-f wiring, or the chassis. With extremely strong interfering signals, however, it is possible for some of the interference to pass through the r-f and mixer stages, particularly when the set is tuned to a low channel. When the interference *is* entering by direct pickup on the i-f wiring, switching to another channel may or may not make a change in the relative intensity of the interference. The number of interference lines or bars seen on the screen will *not* change, however, unless the frequency of the interfering signal changes. This is true because in this case, the number of lines depends on the frequency relationship between the interference and the horizontal sweep frequency, which is the same on any channel.

Direct pickup of *i-f interference* by the chassis and wiring is not generally troublesome, although direct pickup by the chassis of r-f interference is troublesome, especially in the case of radiation from the local oscillator of another television receiver. Interfering signals at the intermediate frequencies entering the receiver through the front end are minimized by the use of an antenna input filter that has maximum attenuation at the receiver's i-f.

In addition, the sound traps in the picture i-f circuits reject any signals at the sound i-f removing these from the picture circuits. In the sound i-f circuits, AM interference at the intermediate frequencies is not so effective because the FM sound circuits reject amplitude modulation.

To determine whether the interference is an i-f, r-f, or image frequency, note the effect of the receiver fine tuning control on the number of interference lines in the picture and observe the number of channels on which the interference is present. If the number of lines in the beat pattern changes when the fine tuning control is adjusted, and the interference appears on several stations, the interfering signal is in or close to the i-f band of the receiver.

Removing the oscillator tube will *not* make it possible to distinguish r-f interference from i-f interference when the kinescope is used as the indicating device. Disabling the local oscillator will remove the picture i-f carrier that beats with i-f interference, resulting in no interference beat or lines in the picture.

Interference Outside The Receiver Passband. – It might seem at first thought that electrical energy on frequencies outside the r-f and i-f passbands could not cause interference. When the strength of such electrical disturbances is comparable to the strength of the television signals, there is actually not much likelihood of interference, excepting for the special case of image interference. Even for image interference, little trouble is likely unless the image signal is at least twice as strong as the desired television signal at the receiver input. It is true that when the image signal is many times stronger than the desired signal, there may be interference, even in the later receiver models. The reason for this is taken up in an appropriate paragraph below.

Unfortunately, this is not the whole story regarding interference by radio energy on frequencies outside the normal passband of the receiver. There are many radio and electrical devices today that can and do produce disturbances that are hundreds or thousands of times as strong as the desired television signal, when they are relatively near, and the TV station is fairly distant. Such radio disturbances may not themselves fall within the receiver passband, yet may cause interference by generating new frequencies that *are* within the passband. Such new frequencies are produced by nonlinear action of some stage in the receiver, due to the excessive strength of the interfering disturbance.

Image Frequency Interference. – In any superheterodyne receiver, the correct intermediate frequency can be produced by a signal on *either one of two frequencies*, one above and one below the oscillator frequency by the amount of the i-f frequency. In TV receivers, the frequency below the oscillator is usually the desired signal frequency. This leaves the frequency at an equal difference *above* the oscillator as the "image" frequency. Since signals on this image frequency can also produce the correct i-f, they may cause interference, if they are sufficiently strong as compared to the desired signal at the mixer signal grid.

As an example, consider a television receiver in which the i-f picture carrier is 25.75 mc. To receive Channel 2 picture carrier (55.25 mc), the oscillator must operate at 81 mc (55.25 mc plus 25.75 mc). However, any signal on 106.75 mc will also produce a 25.75 mc difference frequency, if it reaches the mixer grid. And if this signal is sufficiently strong as compared to the desired signal at the same point, it will cause interference. The only practical way to minimize such image interference is to design the receiver so that circuits *preceding the mixer grid* have greater response to the desired signal than they do to the image frequency signal.

This is done with tuned circuits. The band of frequencies these tuned circuits preceding the mixer grid are meant to admit is called the r-f passband, and in practical superheterodyne receivers, the image frequency band is always outside the r-f passband. The degree to which the receiver can discriminate in favor of the desired signal is controlled by the selectivity of the tuned circuits, their

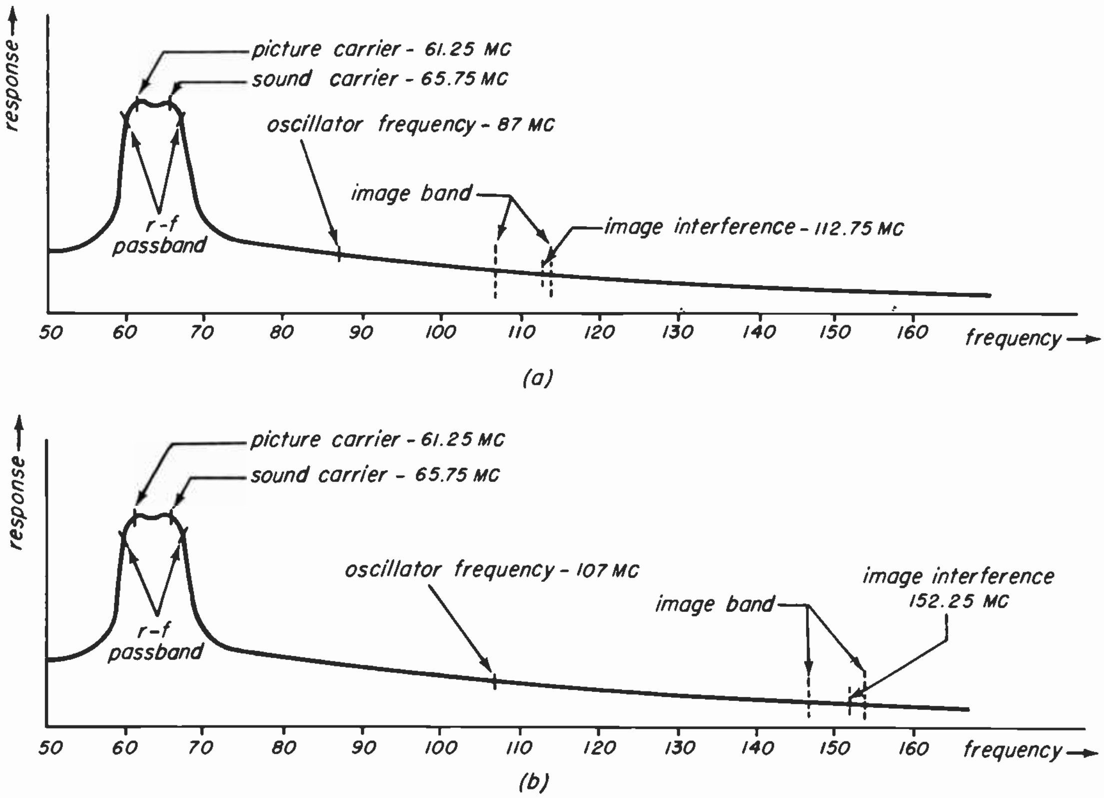

(a)

(b)

Fig. 42-9

number, and the percentage frequency separation between the r-f passband and the image band which depends on the i-f of the receiver. This latter point is important, because of the way the response of tuned circuits varies with frequency. The effect can be understood by studying the curves of Fig. 42-9, showing a typical r-f tuned circuit response curve, and the use of two different intermediate frequencies.

In *a*, the frequency of the desired signal is 61.25 mc, and the oscillator frequency is 87 mc, making the i-f 25.75 mc, and the image frequency 112.75 mc. The image frequency is twice the i-f away from the desired signal, a frequency separation of 51.5 mc, or 84 percent of the desired signal in this case. The response of the r-f tuned circuits at the image frequency is far below the response at the frequency of the desired signal, although it is not zero. Now consider *b*, in which the same r-f circuit response curve is shown, but with a higher intermediate frequency. Here the oscillator is at 107 mc, making the i-f 45.75 mc. Again, the image is double the i-f above the desired signal, placing it at 152.75 mc, which is 249 percent of the desired signal frequency. It can be seen from the curve that the response at this frequency is considerably less than at the 112.75 mc image frequency shown in *a*. From this it is clear that, for the same r-f tuned circuits, a higher i-f gives better rejection of image frequency interference. It can also be seen, however, that while the response at image frequency is much lower, it is still not zero, and therefore image interference can occur, even though it is outside the r-f passband.

Double Conversion. – The process by which double conversion of a television signal can cause interference trouble was discussed in Section 42-1. It is possible for other r-f signals to cause interference in the same way, when the frequency relationships are correct. Thus a transmitter on an assigned frequency of 161.01 mc could interfere with a television receiver tuned to Channel 4, as follows: The 161.01 mc carrier combines with the 93 mc local oscillator signal in the TV r-f stage, producing a difference frequency of 68.01 mc. This is converted again in the mixer to a difference frequency of 25.99 mc, and the resulting 0.24 mc beat between this signal and the Channel 4 picture i-f signal (25.75 mc) appears as typical r-f interference lines in the picture.

Cross-Modulation. – Signals normally outside the r-f or i-f passband of the receiver can also interfere, as noted in Section 42-1, where the process by which such interference occurs was discussed. The end result of the cross-modulation process is that one or more of the sum, difference, or harmonic frequencies produced falls *inside* the passband. This can occur even when no one of the signals present actually is within the passband itself. Because of this, it is necessary to consider all the simpler arithmetical combinations of the frequencies involved in the action when trying to analyze the problem. In most cases, the problem can only be solved by determining which path the overly strong signal causing the cross-modulation follows in reaching the affected stage, which is usually the r-f amplifier. When the path of entry has been found, the strong signal can usually be reduced or eliminated by a suitable trap, thus ending the trouble.

External Cross-Modulation. – It is possible under certain circumstances for cross-modulation to occur outside the receiver, in wiring or other electrically conductive structures not ordinarily thought of as capable of causing interference. All conductive structures above the ground surface can pick up r-f energy, and when the conduction within the object is nonlinear, harmonics and cross-modulation can occur. If the signals are sufficiently strong, and the object concerned is a fairly efficient radiator, the new frequencies generated can cause interference in nearby receivers, even though none of the original signals concerned does so. Such external cross-modulation causes trouble most frequently in areas very near a powerful source of r-f energy, such as a transmitting antenna. It also occurs occasionally in structures that can intercept an unusually large amount of the various radio signals present at their location, such as a large outside antenna for an AM broadcast receiver. In every case, there must not only be an electrical conductor of some sort to intercept the various signals, but *it must conduct nonlinearly*. The nonlinear conduction in most structures such as wire clothes lines, broadcast antennas, wire fences and the like, usually occurs in joints made by twisting or clamping separate pieces together, without soldering or weather protection. Such joints become corroded in time by normal weather effects, and then act as a fairly efficient metallic oxide rectifier.

Noise Interference. – Electrical noise interference may actually be within the passband of the receiver, or may be converted in frequency so as to appear within the passband as a result of cross-modulation or double conversion. Noise is usually a fairly random mixture of different frequencies and amplitudes, with a few frequencies of relatively large amplitude compared to the rest. Because of the relatively wide band of frequencies involved, the chance that some noise will appear within the passband is considerably greater than with most other types of interfering signal. Anything that will make the desired signals stronger compared to the noise will be helpful, and this is frequently easier to do than to remove the noise by filters at the source. Simple traps are essentially narrow-band devices, and thus are not able to remove more than a narrow slice of an interfering broad-band noise.

WHAT INTERFERENCE LOOKS AND SOUNDS LIKE

42-3. Lines In Picture. – Alternating light and dark lines in the picture are the result of interference from a continuous-wave (CW) r-f signal. If the interfering signal is modulated, the pattern of the lines will change with the modulation, in ways that are explained later in this section. Some typical examples of the effect of steady r-f signal interference are shown in Figure 42-10. The actual

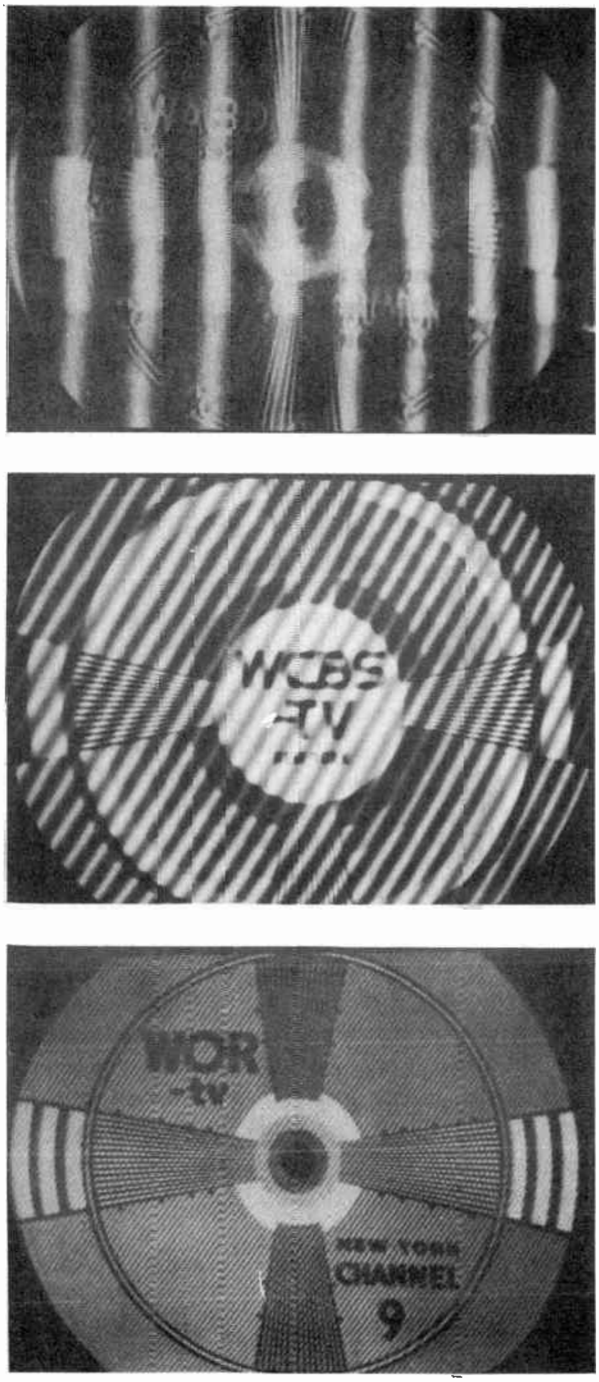

Fig. 42-10

line pattern seen in a particular case may differ in three ways: the number of lines appearing, the contrast range between light and dark lines, and the angle at which the lines cross the screen.

Number of Lines. The actual number of lines seen on the kinescope depends on the frequency difference between the picture carrier and the interfering signal. Thus if the receiver is tuned to Channel 2 (picture carrier 55.25 mc), and the interfering signal is at 56.25 mc, the 1 mc frequency difference will produce about 50 lines in the picture. This comes about as follows. Both picture carrier and interference pass through the r-f stage and mix with the 81 mc local oscillator signal in the converter stage. The difference frequencies of 25.75 mc (i-f picture carrier) and 24.75 mc (i-f from interference) are applied to the picture i-f amplifier, and reach the detector. Here the sum and difference frequencies of the picture carrier and interference are produced by the normal action of that stage, and passed on to the video amplifier. The sum frequency (50.5 mc) is bypassed to ground by the video amplifier, but the 1 mc difference frequency is within the video passband, and appears at the kinescope grid as a signal. This signal swings the kinescope grid voltage alternately above and below the instantaneous level due to the picture information, at the 1 mc frequency.

Allowing for the small amount the picture overlaps the mask at the sides, it takes the scanning spot about 50 microseconds to cross the visible part of the screen. Since one cycle of the 1 mc interfering signal occurs in one microsecond, about 50 complete cycles will show, counting directly across the screen. One light and one dark line of the interference pattern represents one complete cycle.

Angle of Lines. – The angle of the lines across the screen is determined by the phase relationship between the interfering signal and the horizontal sweep. Thus when the interference frequency is an exact multiple of the sweep frequency, the phase relationship will be constant, and the lines will be vertical. If the interference frequency is not an exact multiple of the 15,750 cps sweep, the lines will slant one way or the other, the direction and angle depending on the amount of phase change between lines.

FM Effects. – When the interfering signal is frequency modulated, some interference may or may not show up in the sound output. This depends upon the strength and frequency of the interfering signal, and the character of the modulation. The effect produced in the picture is to scramble the regular steady line pattern into a rapidly varying pattern that changes with the modulation, or to produce a pattern with striations. An example of what such scrambled lines look like at a given instant is shown in Fig. 42-11.

Fig. 42-11

If the modulation can be heard in the sound output, its sound will frequently aid in determining what the source of the interference is. Thus when the interference is from the image of an FM broadcast station, the program material and station announcements will serve to identify it.

AM Effects. – An interfering signal that is amplitude modulated produces a different effect on the appearance of the bars. In this case the number and slope of the bars will not change unless there is some frequency modulation also occurring. The intensity and contrast of the bars *will* change, increasing and decreasing with peaks of the AM modulation. This causes the overall light output from the screen to increase and decrease rapidly in a sort of flashing effect, particularly when the interfering signal is being modulated by speech.

It also frequently happens that some of the modulation may be heard in the sound output, even though the receiver sound detector tends to reject amplitude modulation. This can happen when the interfering signal is very strong, because of overloading and cross-modulation effects in the receiver. As in the case of FM sound interference, listening to the program material often aids in identifying the cause of the interference.

Negative Picture. – The negative picture effect is a condition in which the contrast values of the picture are reversed, so that dark or black areas appear as shades of gray, and light or white areas appear dark or black. The retrace lines may also be visible. A typical example of negative picture is shown in Fig. 42-12, with a normal picture for comparison.

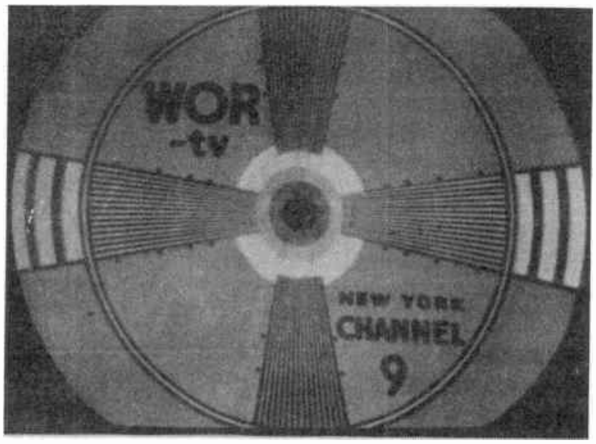

Fig. 42-12

Negative picture can be caused by continuous-wave r-f interference of the same sort that produces the line patterns discussed previously. The difference in appearance is caused by a difference in frequency and strength of the interference, rather than by any difference in its nature. When the frequency difference between the picture carrier and the interference is relatively large, say 3 mc or 4 mc, the alternate light and dark lines of the beat frequency pattern become so narrow that they approach the size of an element of picture information. As a result, the line pattern becomes indistinct, and from a little distance may be practically invisible. If the interfering signal is fairly strong, say half as strong as the television carrier, the normally black areas of the picture will begin to show some gray tone, and the brightest areas will darken. The cause of this is shown in the wave diagrams of Fig. 42-13.

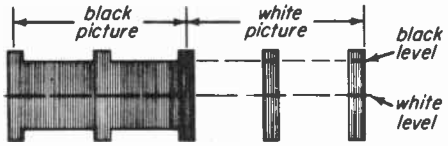

(a) Receiver carrier with no interference

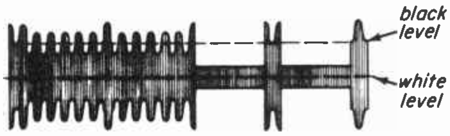

(b) Small interfering c-w added

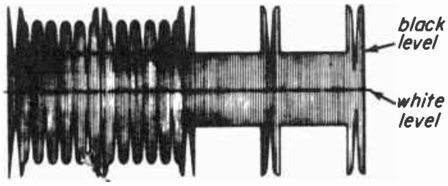

(c) Large interfering c-w added, approximately equalling picture carrier

Fig. 42-13

In *a*, the normal picture carrier level when scanning a black area followed by a white area is shown. While scanning the black area, the picture carrier amplitude reaches the black level, which practically cuts off the kinescope beam in the receiver, so no light is produced in the area of the screen being scanned at that instant. In scanning the following white area, the carrier level goes down practically to zero amplitude, the beam current in the kinescope reaches its maximum value, and the screen produces maximum light output.

Now consider the condition shown in *b*, where the interfering signal is added, beginning with the black area. Since the interference differs in frequency from the picture carrier, it will alternately reinforce and oppose the carrier as the two signals go in and out of phase with each other. During instants when the interference is *reinforcing* (in phase with) the carrier, the *total* signal level exceeds the black level. But since the beam is cut off when the carrier reaches black level anyhow, the appearance of the spot being scanned will not change. In other words, it cannot become blacker than black. During instants when the interference *opposes* (is out of phase with) the carrier, the *total* signal amplitude is reduced below the black level, and the kinescope screen shows a tone of gray, in an area of the picture that should be black. Since these areas are very close together when the beat frequency is relatively high (3 mc or 4 mc), the whole black area looks gray from a normal viewing distance.

During scanning of the following white area, there is practically no picture carrier amplitude to beat with the interference. The result is that the total signal corresponds almost exactly to the value of the interfering signal, instead of to the almost zero level of the picture carrier. This causes the white area to be *reduced* in intensity to a weaker shade of gray.

In *c*, where the interfering signal is stronger than in *b*, the total signal amplitude goes to zero during instants when the interference is out of phase with the carrier, and far above the black level when in phase with it. As a result, the dark area will be still lighter than for the condition shown in *b*. The following light area on the other hand appears dark on the kinescope, because the interfering signal is strong enough to practically reach the black level.

If the interfering signal becomes very much stronger than the picture carrier, say several times as strong, the kinescope may be completely blanked out. This can happen even when the picture

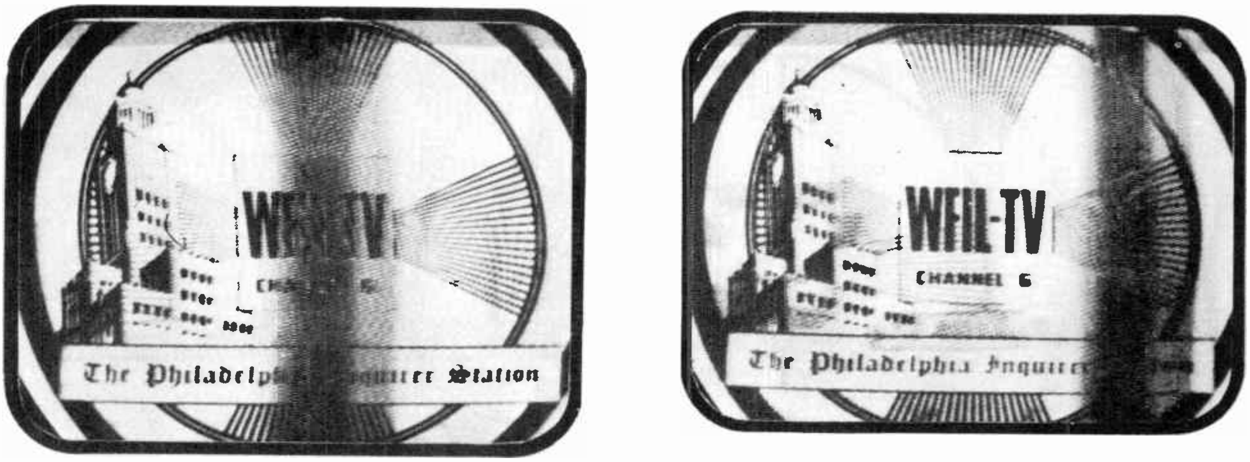

Fig. 42-14

carrier itself is of better than average strength. One reason for this is that the interference source may be very much nearer the receiver. Another contributing factor is that when the set is correctly tuned, the picture carrier is about halfway down the slope of the i-f response curve, while the interference may be in the maximum response part of the i-f passband.

Windshield Wiper Effect. – When the signal from a television transmitter on a channel adjacent to the one to which the receiver is tuned is very strong, the windshield wiper effect may be produced. A poorly aligned receiver is more likely to be troubled by this sort of adjacent channel interference, because the reduced selectivity permits the interfering carrier to reach the picture detector and succeeding stages at considerable strength, as compared to the carrier of the desired station. The result is that the blanking bar of the interfering station appears in the picture, often moving across the picture in a rhythmic way that resembles the action of a windshield wiper. The effect is shown in Fig. 42-14 by two photographs made with a slight time interval.

The cause of this action requires some discussion. The direct beat frequency between the picture carriers of adjacent channel stations is 6 mc, much too high to pass through the video amplifier and reach the kinescope grid. Some of the *sideband frequencies* produced by the modulation on the carrier of the adjacent channel station may get through the receiver, however, particularly if the adjacent channel signal is strong, and the receiver alignment is not perfect, as noted above. The blanking bar is one of the strongest components of the modulation in a television carrier signal, and because of its strength, is usually the most prominent characteristic of the adjacent channel interfering signal to show in the picture.

It appears *in* the picture area, rather than off the screen to the right as does the blanking bar of the desired station, because the distance between transmitting and receiving antenna is not the same for both stations. The *motion* of the bar (when it occurs) is due to the fact that both stations are not operating from the same 60-cycle a-c supply line, and any lack of perfect synchronism between the two power line frequencies, while small, will show up as motion of the interfering station blanking bar.

Diathermy. – The characteristics of the r-f waves radiated by diathermy equipment are such that it is rather easy to identify interference from this source by the effects in the picture. Figure 42-15 shows some typical results, which illustrate this point. Essentially, diathermy radiation is continuous-wave r-f, with strong 60 or 120-cycle modulation. The frequency of the radiation will be varied somewhat by the changing load on the equipment as the application electrodes

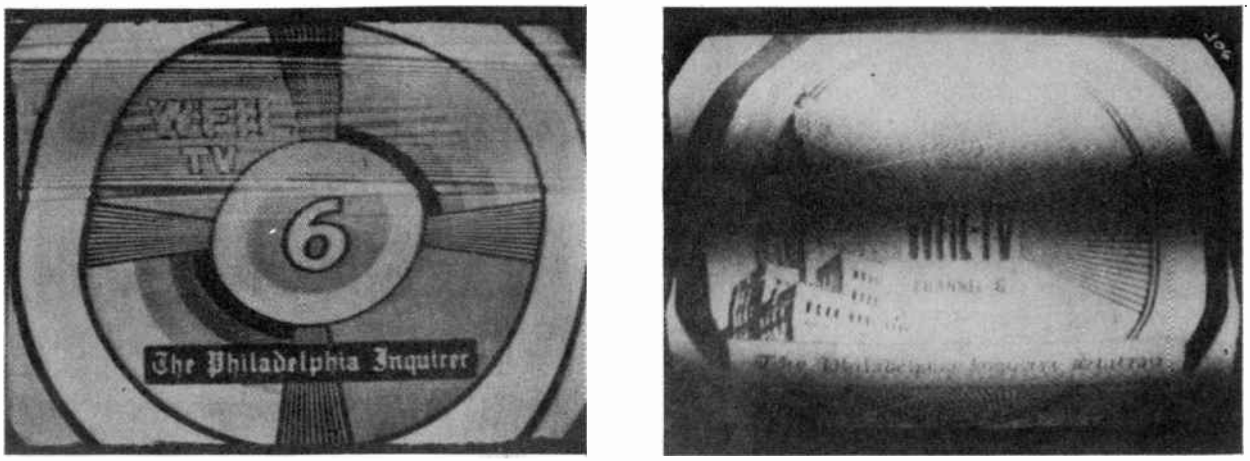

Fig. 42-15

and their leads are moved about, or as the patient moves. This shows up in the interference as some incidental frequency modulation, and helps to identify the source.

It is true that some r-f heating equipment used in manufacturing processes also produces similar interference patterns in the picture, but it is usually possible to differentiate between the two sources by other characteristics, such as the location (near a doctor's office, a factory, etc.), or the more rhythmic duty cycle of factory production machinery. In either case, however, the pronounced 60 or 120-cycle bars across the picture, coupled with the typical r-f line pattern, are usually enough to rule out other sources.

FM Signal Interference. – The appearance of this type of interference has certain characteristics that make it relatively easy to identify. These can be seen in Fig. 42-16, which includes typical examples. The frequency modulated signal is an r-f carrier wave that does not vary in amplitude, but does change in frequency, in a way controlled by the modulating signal. When an interfering FM carrier is not being modulated, such as during instants between spoken sentences, the carrier frequency remains steady, and the interference pattern produced will be the same as that of any other continuous-wave interference; a number of light and dark lines across the screen. When modulation is applied, the rapid variations in carrier frequency cause the line pattern to be scrambled, and to vary rapidly from instant to instant. Some of the modulation may also be heard in

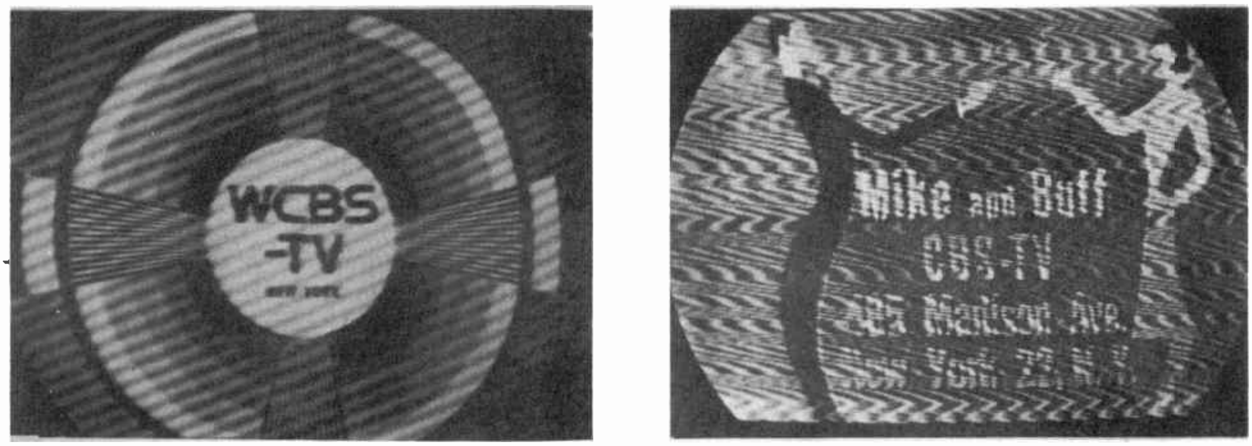

Fig. 42-16

the loudspeaker, but this is not always the case.

Barkhausen Oscillation. – The cause of this annoying type of interference has been discussed in Lesson 37, which deals with the action of the deflection circuits. It appears in the picture as a rather ragged dark vertical bar or bars near the left edge of the picture, as shown in Fig. 42-17.

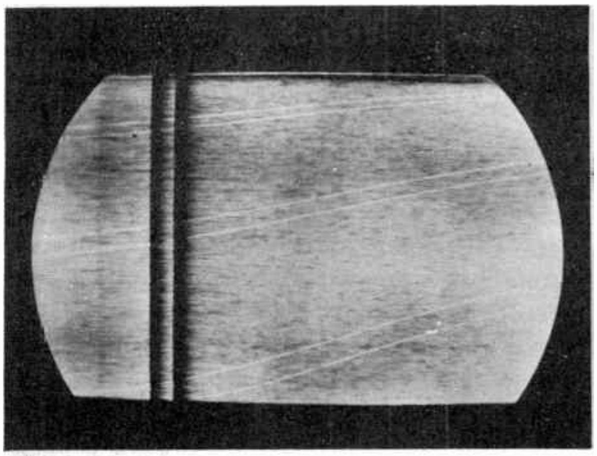

Fig. 42-17

This type of interference is not as common as formerly, due to some improvements in deflection circuits and vacuum tubes, but it still may show up in an occasional set. Receivers using the built-in antenna, or an indoor antenna located rather near the set are more likely to be troubled, since the oscillation may be picked up rather strongly in the antenna in such cases. In general, Barkhausen interference is attacked by trying to stop the oscillation by changing tubes in the horizontal deflection output socket, by the use of a small magnet near the horizontal output tube, and by relocating the antenna, when it is very near the chassis, as described above.

Noise. – The patterns produced in the kinescope by noise interference show more variation than those due to most other sources, but do have some characteristics that aid in identification. Noise consisting of a rapid succession of short, sharp pulses of r-f energy produce short light or dark streaks along individual lines of the picture, as shown in Fig. 42-18.

Fig. 42-18

Motor vehicle ignition systems are by far the most common source of such interference, and the appearance of the streaks can often be correlated with the sound of the vehicle for positive identification. Reduction of this type of interference is often much more difficult than identifying it, since it often requires relocating the antenna and/or transmission line, use of a shielded line, and similar measures.

Noise generated by neon or fluorescent lighting fixtures is fairly common in locations near large installations such as outdoor signs or factory lighting systems. It can usually be identified by the fact that it comes on coincident with the turning on of such fixtures in the evening, and by the 60 or 120-cycle black bars it frequently produces. Such noise interference is usually less intense than ignition noise, but may enter the set through the power line as well as through the antenna, which is very unlikely with ignition noise. The kinescope patterns produced by such noise are usually ragged and erratic, as they are only likely to be intense when the device producing them is operating defectively, with flickering, arcing, and similar conduct.

Noise from appliance motors, power tools, and heavy electrically powered equipment like elevators may have some of the pulse characteristics of ignition noise, but almost invariably show strong

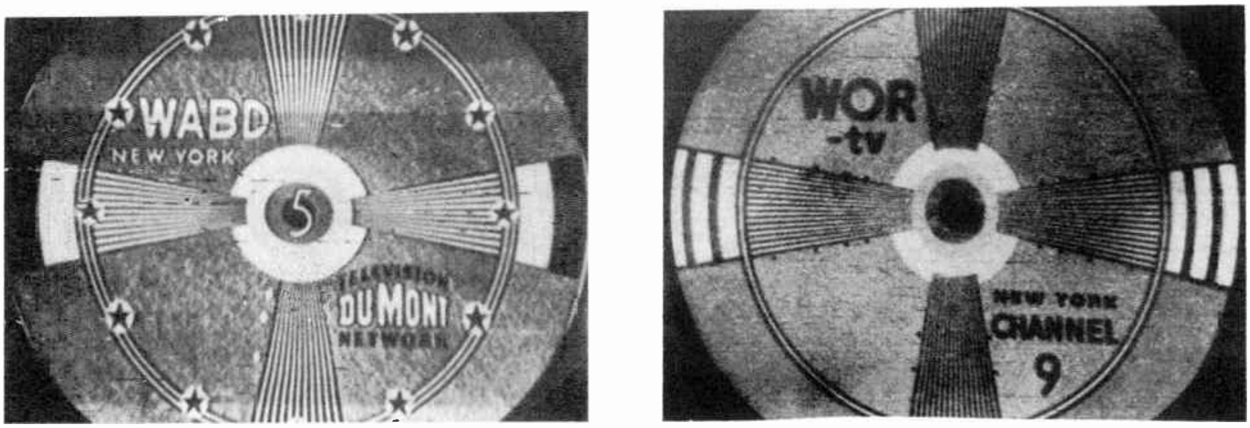

Ignition Noise

Electrical Appliance Motor Noise

Fig. 42-19

60 or 120-cycle modulation resulting in the familiar dark bar or bars. Such interference may enter by the power line, or through coupling from the building wiring to the line or antenna. As in the case of many other noise sources, the appearance of the pattern in the picture can often be correlated with the operation of the device in question. The pictures of Fig. 42-19 are typical of noise interference. Noise produced by a sparking effect, such as from the brushes of a motor, produces horizontal streaks like ignition noise, but *brush noise in the picture is more dense.*

DEVICES FOR ELIMINATING INTERFERENCE

42-4. Due to the wide variety of different kinds of interference, a considerable number of different devices is required to combat it. In making the best possible use of them, it is necessary to have some understanding of the principles on which they operate, the nature of the interference itself, and the path by which it enters the receiver. The devices used, such as stubs, filters, and the like, usually operate by presenting a very *high* impedance in series with the path of entry of the interfering signal, by offering a very *low* impedance shunt across the path or to ground, or by a combination of both principles. In addition, if the particular path involved happens to be the one by which the desired television signals must also enter, the interference-elimination device must have negligible effect on the desired signal. Thus a high-pass filter for use between the transmission line and the receiver input terminals to prevent interference from strong low-frequency signals must not appreciably reduce the strength of television signals on any channel.

Interference-eliminating devices can be divided into wide-band and narrow-band types, and can also vary in the amount by which they attenuate the interfering or overly-strong signal. A good example of a wide-band interference-elimination device is the type of filter used in the a-c power line to prevent unwanted disturbances from entering or leaving the receiver by that path. Such a filter is usually a combination of inductors and capacitors arranged in a low-pass configuration. The values chosen offer very little series impedance to the flow of 60-cycle a-c power into the set, but have a cut-off frequency not very far above that, so that noise voltages and other disturbances picked up on or coupled into the line see a very low shunt impedance across the line, and a very high impedance in series with the line conductors. This effect exists for signals of all frequencies above the cut-off frequency of the filter, but not for those below that frequency, such as the 60-cycle power for the set. This wide-band filter does not have to be tuned.

The operation of a narrow-band device

such as a resonant stub or an i-f trap is by contrast very selective, and as a result, it must be carefully adjusted to the correct frequency. This is not the case with the high-pass or low-pass filters, which can be installed without any adjustments. Because of this difference in response, the two types of interference-combatting devices are best suited to preventing different sorts of interference. In general, narrow-band devices are used mostly to reduce or eliminate a single interfering signal of relatively stable frequency, which is within the r-f or i-f passband, or in the image band of the receiver. Wide-band devices are used mostly to eliminate the effects of any and all signals *outside* the designed r-f and i-f passbands of the receiver.

Resonant Stubs. – The resonant stub is most useful when an interfering signal on a single frequency must be reduced in amplitude as compared to the desired signal at the receiver input. A common example of this situation exists in many locations where the signal on one television channel is excessively strong. A resonant stub is a piece of transmission line which may be either a quarter-wave or half-wave long electrically at the frequency of the interfering signal. In use, the conductors at one end of such a stub are connected to the appropriate place in the system, in parallel with the circuit carrying the interfering signal. This is often the receiver input terminals, but such stubs may also be connected across the line terminals at the antenna, or at other points.

For maximum reduction of the interfering signal, the quarter-wave stub is left open at the end not connected to the signal path. This makes it look like a low-loss series-tuned circuit to the interfering signal. Since it is connected *across* the signal path, it acts as an extremely low-impedance shunt, across which very little voltage can be developed by the interfering signal. However, the impedance of this shunt path rises very rapidly as the frequency departs from the resonant frequency of the stub, and thus a desired signal somewhat removed from the interfering frequency does *not* see a low-impedance shunt. The action of the half-wave stub is exactly the same, when the unconnected end is *short-circuited.* The reason for this is discussed in Lesson 21.

Either quarter or half-wave stubs may be used, but the quarter-wave type is considerably more sensitive to the detuning effects of nearby objects, and thus requires somewhat more care in installation and adjustment. The half-wave type on the other hand is somewhat less subject to detuning, but is twice as long, making it harder to mount neatly and securely.

About the most commonly used stub for attenuating an overly-strong signal is the quarter-wave open-end stub across the receiver input, perhaps with a resistor of suitable value connected across the "open" end to reduce the amount of attenuation. The exact length for such a stub must be adjusted by cut-and-try, with the stub mounted very nearly in the position it will finally occupy, so as to avoid detuning by movement after final adjustment. It is convenient to have a starting point from which to begin trimming, however, to avoid needless waste of line and time. This can be found by using the formula: Stub length in inches equals 2950 divided by the frequency to be attenuated, stated in megacycles.

$$L \text{ (inches)} = \frac{2950}{F_{mc}}$$

This gives a length about 15 to 20 percent greater than the actual length of an electrical quarter-wave on 300-ohm twin-lead, which leaves ample room for length adjustment.

A quick check is often needed, to see whether a stub will actually make any improvement in a particular case, and the following test is about as practical as any. Connect a piece of twin-lead known to be more than a half-wave long at the frequency to be attenuated (it can be *any* length greater than this) across the receiver input, in parallel with the transmission line. Wrap a piece of tinfoil or similar good conductor (a piece of thin folded sheet metal will do) around the piece of test line at a point approximately a half wavelength away from the receiver input terminals. Slide this back and forth along the test line while watching the screen for a change in the effect of the tinfoil on the undesired signal. If a stub is going to be much help, it will be possible to find a spot where the effect of the strong signal is reduced to a minimum. If no point can be found roughly a half wavelength from the receiver input where a definite improvement results, it indicates that a resonant stub will not help matters. This test is actually a trial with a resonant half-wave shorted stub (the tinfoil acts as a capacitive short circuit), which is electrically similar to a quarter-wave open-end stub, as seen from the end connected to the receiver. It has the advantages of being simple and quick to try, and avoids the necessity of cutting up good line for test purposes.

Reactive Stubs. – Stubs of lengths other than a quarter-wave or half-wave long can also be used for certain special purposes. Such stub lengths are reactive at the frequency considered, and it is the reactive characteristic that is actually wanted when such stubs are used in practical installations. In general, an open-circuited stub less than a quarter-wave long at a given frequency looks like a capacity to the source of energy. Conversely, a short-circuited stub of the same length looks inductive to the same source. Stubs of this sort may be used at any point where it is desired to add a moderate amount of low-loss inductance or capacitance.

An example of the use of a reactive stub to improve reception occurs when the television signals are excessively strong on the highest or lowest channels. Suppose the receiving location is such that signals on Channels 2, 4, and 5 are excessively strong, but signals on the remaining active channels are of average strength. The use of a resistive pad to reduce the strong signals will also reduce the signal strength on the other channels, perhaps to such a low level that they will be unsatisfactory. In this case, use of a stub presenting an inductive reactance across the receiver input will reduce the signal strength on the low channel stations considerably more than it will those on the high channels. In fact, if the stub length is carefully adjusted, it is possible to *increase* the signal strength on the higher channels slightly, while reducing the excessive signals on the low channels.

High-Pass Filters. – One of the most effective devices for combatting interference by powerful signals lower in frequency than the lowest television channel is a high-pass filter. The name "high-pass" actually describes the way the filter is designed to function, and means merely that the device attenuates signals on frequencies *above* a certain selected cut-off frequency only a little, but attenuates all frequencies *below* the cut-off very much. Commercial high-pass filters for use with television receivers are usually designed to have a cut-off frequency somewhere between 48 and 54 mc, with the attenuation increasing rapidly below that frequency. It is not possible in practical filters to have the attenuation reach its maximum value just below the cut-off, nor can the attenuation be infinite. Nevertheless, in high-pass filters of good design the attenuation of signals even 10 mc below cut-off will be 4-8 times down in voltage, and the signal amplitude continues to decrease as the frequency is lowered. This type of filter does not have to be tuned.

The high-pass filter is one of the most effective devices for solving interference problems, because many such problems are caused by an extremely strong signal on some frequency below the lowest television channel. Some receiver models have a built-in high-pass filter in the input circuit, but even these may occasionally be troubled by such interference. This is true because the attenuation of the filter is not infinite, and an extremely strong signal may still get through. The addition of another high-pass filter preceding the receiver input frequently cures such trouble.

Power-line Filters. – In many cases, noise and interference enters the affected receiver by way of the a-c power line.

The path by which the offending signals actually reach the affected circuits in the set is frequently the capacity between the power transformer primary winding and the other windings, perhaps also the capacity to the core and shell. Commercial filters are available that effectively prevent the entrance of any signals above a frequency of 100 cycles or thereabouts. These are low-pass filters, and they are usually equally effective in preventing signals generated within the television set from leaking back into the power line, perhaps to cause interference in other receivers. They are particularly effective for use with television sets that do not have an electrostatic shield between the primary and other windings, to prevent harmonics of the horizontal sweep voltage from causing interference in AM broadcast receivers operating from the same a-c line. This type of filter is not tuned; the unit is just connected into the power line.

Capacitors and Inductors. – The use of a tubular paper capacitor at a suitable point in the receiving system is sometimes helpful in combatting interference. In practice, such a capacitor of a value selected by trial and error may be quite effective when connected across the receiver input terminals. The value most effective in a given case may turn out to almost anything between .001 mfd and .1 mfd, with values around .01 to .05 most common. At first thought, such a device might seem to conflict with radio theory, since it would seem that it could only act as a very low-impedance capacitive shunt across the input. With actual paper capacitors, this is not so, because the inductance of the leads and aluminum foil 'plates' causes the capacitor to act more like a small *inductance* across the input at the frequencies of the television channels. However, at frequencies *below* the television channels, the behavior of such a capacitor rapidly becomes less inductive, until at some frequency the unit becomes series resonant, and offers an extremely low impedance. The actual frequency at which a given capacitor will be series resonant depends on the length of its connecting leads, its capacity, and the internal construction, which may vary considerably in different makes. As a result, it is usually necessary to use trial and error methods in selecting a capacitor in any particular case. The most common point to try is at the receiver input, but a capacitor across the transmission line at the antenna may also be helpful in certain cases. In general, the action of the capacitor in such applications is very similar to the use of a short inductive stub connected across the signal path at the same point, excepting for the series-resonant action at some frequency below the television channels. Since this series-resonant action may be very effective in reducing interference from a strong low-frequency signal, it is obvious that the capacitor may sometimes be useful where the inductive stub is no help. It is also useful for reducing strong signals in the lower channels without affecting the high channels, in the same way as the inductive stub, but since capacitors come in definite steps of values, the stub may be more desirable, because it can be adjusted by trimming.

Small mica capacitors may also be useful for the same reasons given for paper capacitors. In general, their series resonant frequency will be somewhat higher for a given capacitance value, but otherwise the action is similar. For any capacitor, the length of the leads used has an important effect on the performance, and this should be varied when making tests to produce the maximum desired effect. Ceramic capacitors of similar values usually have still higher resonant frequencies, due to the lower inductance of their plates, and some of these are worth trying when they are available. On the other hand, very small ceramic capacitors of values between 1 and 2000 micromicrofarads may occasionally be useful across the line to *reduce* strong signals on the upper channels without affecting lower channels. The action in this case is merely that of of a small shunt capacitance, since series resonance of such ceramic capacitors will usually be *above* the television channel frequencies. A capacitive stub will give the same action, and can be more accurately adjusted by trimming.

A small coil connected across the receiver input can be used to give much the same effect as an inductive stub, and occasionally this may prove useful. In practice, a few inches of solid hook-up wire can be wound around a pencil and slid off the end after forming. The turns should be spaced about the diameter of the wire for best results, and coils of different numbers of turns can be tried for optimum results. In general, the inductive stub is easier to adjust and mount in place

Shielding. – Another way in which interference may be combatted is by the use of shielding to prevent the interfering energy from reaching a point where it can cause trouble. In most cases, this involves much more expense, trouble, and work than other methods, and as a result, it is usually not done except as a last resort. In extreme cases, where the receiver itself is located very near a very powerful interfering device such as an old model diathermy machine or a radio transmitter, it may be necessary to line the cabinet with copper screening, or put a bottom plate on the chassis. In addition, or alternatively, it may be necessary to relocate the antenna and transmission line for less interference pick-up, or to use shielded twinlead line, with the shield carefully grounded. In all cases requiring shielding, the grounding of the shield material is likely to be the most important single feature. In most cases the exact point on the shield for connecting the ground lead must be selected by trial and error, with the set in the actual position it will occupy in use. In general, shielding is most effective against very strong interference generated very near the receiver, and in such cases, the possibility of reducing the interference at the source should also be considered.

Changing Intermediate Frequency. – In most receiver models, it is possible to readjust the oscillator frequency used on each channel so that the actual intermediate frequency of the sound and picture carriers is shifted. This is most often done when the oscillator of one set causes serious interference in one or more other sets, the idea being to move the oscillator frequency of the set *causing* the interference out of the passbands of the other sets. Naturally when the oscillator circuit of the interfering set is changed, the intermediate frequency amplitude circuits must be completely realigned to accept the changed intermediate frequencies properly. This is a fairly extensive job, but it must be done in persistent cases. *Note that the work is done on the set that causes the interference, rather than those in which the interference occurs.*

Miscellaneous Remedies. – Before doing any special work on an interference problem, it is usually wise to check the condition of some parts of the set, if there is any reason to suspect them of poor operation. If, for instance, the customer complains that the interference began very suddenly, and your examination shows that the trouble is FM, the FM trap should be checked for an open or short before going on to other measures. I-f traps may also open or short, or drift out of adjustment, and a little thought about the case history as given by the customer while you study the interference pattern may save some false starts and wasted work.

In certain sets, extra traps can be used in i-f stages not normally requiring them. In some cases these may prove helpful where extra attenuation is needed. It is usually better however, to work on reducing the signal *before* it reaches this point in the set.

PRACTICAL INTERFERENCE ELIMINATION

42-5. Television Receiver Local Oscillator Radiation. – Local oscillators of television receivers occasionally radiate enough energy to nearby sets to cause interference, particularly in multiple dwellings and other locations where sets are normally close together. This kind of interference varies greatly between different makes and models, and between individual receivers of the same model. Due to the large number of different makes and models, and the fact that there is no industry-wide agreement on intermediate frequencies, or the amount of oscillator radiation permitted, it is not possible to state every way in which such interference can occur. Some of the most common examples are shown in Table 1.

TABLE 1

Interfering set on	Set interfered with on
Channel 2	Channel 5
,, 3	,, 6
,, 7	,, 11
,, 8	,, 12
,, 9	,, 13

Sets having the 21-26 mc i-f amplifier system can interfere with any other receiver, when both are tuned to the correct channels, as indicated in the Table. This is true because the oscillator fundamental frequency in these sets falls in the television channel concerned. Sets having the 41-46 mc i-f system *cannot* interfere with other sets in this way, because the oscillator frequencies do not fall within the limits of any television channel. This will be clear from study of Fig. 42-1.

Image interference can also be caused by the local oscillator of 21-26 mc i-f sets in a reverse way frequency-wise, that is: a set tuned to Channel 5 has its fundamental oscillator frequency in the *image* response region of a set tuned to Channel 2. The other possibilities for this type of interference are shown in Table 2.

TABLE 2.

Interfering set on	Set interfered with on
Channel 5	Channel 2
,, 6	,, 3
,, 11	,, 7
,, 12	,, 8
,, 13	,, 9

Image type oscillator interference produces the same pattern of r-f lines on the screen as in the direct case of 2 on 5, etc., but it is usually much weaker, because the set interfered with has less response at the image frequency, as explained earlier. Sets having the 41-46 mc i-f cannot interfere with each other in this way, as the frequency relationships are incorrect. In theory, such sets might cause some interference with 21-26 mc i-f sets on certain channels, but in practice, the oscillator radiation from 41-46 mc i-f receivers is so low that interference in this way is quite rare.

Local oscillator interference is usually revealed as such by the following characteristics: It shows the typical slanting line pattern of continuous-wave interference, without frequent interruption or very much change in frequency, when it comes on or goes off, this usually occurs when programs are changing (at which time the owner of the interfering set is most likely to change stations), and it never shows any modulation. When such interference shows up on one or more of the channels indicated in the Table as being subject to oscillator interference, it is desirable to check the sets of the nearest neighbors by switching them off for an instant, or momentarily tuning to another channel. If this kills the interference, the cause is established.

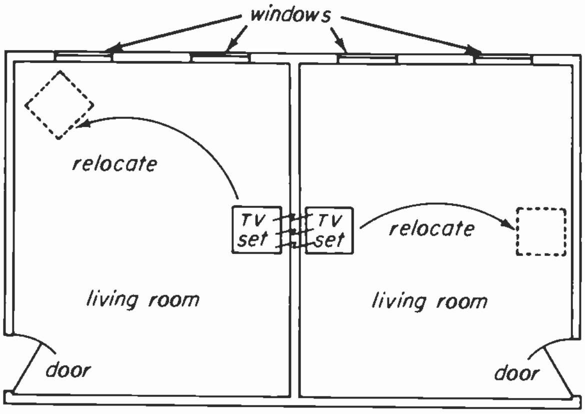

Fig. 42-20

In correcting interference from receiver local oscillators, certain common points are important. Severe interference is almost always found to be due to the chassis of the two sets being physically close together, perhaps on opposite sides of the same wall in an apartment house. The plan view of Fig. 42-20 illustrates this condition. *Strong* local oscillator interference is seldom the result of close spacing of antennas or lines *only*, although this may contribute somewhat. When the interference is coupled *only* through antennas or lines, it is usually weaker and more easily corrected.

The most effective way to reduce interference due to proximity of the two chassis is to relocate them further apart, and this should be done where possible. This may be difficult in multiple dwellings, even when the set-owner is willing to rearrange his furniture to aid in a solution. Since the amount of oscillator radiation varies considerably between individual sets, it is not possible to give hard and fast rules that fit all cases, but in general, it is more effective to work on the set *causing* the interference, when permission can be obtained to do so. This may be difficult, because the owner of the offending set may not himself have any trouble. In cases where the interfering set causes interference in several others, however, it may be essential to get cooperation of the owner, in order to change the oscillator frequency, as described earlier.

If it is possible to attack the problem by working on the set causing the interference, the first step is to realign the the sound and picture i-f amplifiers to the new frequencies. Interference between the upper channels (7 on 11, etc.) requires the greatest change, about 3 mc upward. Reset all the staggered stages of the i-f amplifiers to new frequencies 3 mc *above* those specified in the Service Data by use of the marker generator as described in the Lesson on i-f alignment. When this has been done, the overall response should be touched up by use of the sweep and oscilloscope. It will also be necessary to carefully readjust the *coupling* of the discriminator transformer so that its response again shows a straight-line, uniform slope. The degree of coupling between tuned circuits changes when their resonant frequency is changed, and this change of coupling in the discriminator circuit will cause serious distortion of the sound unless it is corrected.

Certain differences between various receiver models have an effect on the job of realigning the i-f amplifiers, and should be noted. When the change in oscillator frequency must be relatively large, the normal adjustments of the various i-f circuits and traps may not quite reach the new frequency. The Model 721 and similar chassis are relatively easy to change, because they have fewer traps, and the range of their adjustments is great enough to accommodate even a 3-mc alignment change. On the other hand, the 9T240 series is a more difficult job, due to the use of traps in all picture i-f stages, and the fact that the alignment of this set is somewhat more critical anyhow. In some traps, where the tuning range is not sufficient to reach the new frequency, the inductance of the coil can be reduced by short-circuiting one turn. Alternatively, the capacitor can be changed for one of slightly smaller value.

In the 630, 8TS30 and 721 models, the i-f tuning slugs which are of powdered iron can be removed, and brass slugs substituted. This will reduce the inductance of the coil enough to permit tuning to the higher frequency. Removal of the powdered iron slug alone will reduce the coil inductance, and insertion of a brass slug is equivalent to coupling a secondary winding to the coil, consisting of one short-circuited turn. Shorting out one or more turns of any coil always results in reducing the total inductance, and also in some reduction of Q, although the Q loss is small if the shorted turn has very low resistance. The powdered iron slugs are practically nonconductive, because the iron particles are suspended in a plastic binder which prevents particle-to-particle contact. Thus there is no short-circuited turn effect. Instead, the magnetic permeability of the iron acts to *increase* the coil inductance when it is within the coil.

When the i-f amplifiers have been realigned, the oscillator circuit should be readjusted to track properly with the new i-f alignment. This only means that the oscillator tuned circuit must resonate 3 mc *higher* in frequency on each channel than it formerly did, at 84 mc instead of 81 mc for Channel 2, 90 instead of 87 mc on Channel 3, etc. Unless the r-f and mixer stages are already out of alignment, or are accidentally detuned while working on the oscillator, *they do not require any change.*

In cases requiring the largest change of oscillator frequency (3 mc), as in Channel 7 on Channel 11, it sometimes happens that the normal range of oscillator tuning adjustments is not great enough to permit tuning to the required new frequency on the two or three lowest channels. When this is the case, it will be necessary to slightly reduce the inductance switched into the oscillator tuned circuit on the channels concerned. Try the regular adjustments first, beginning with Channel 13 and working down. If the normal slug adjustment will not reach the new frequency, it will usually be necessary to change the coil concerned for a coil meant for the next *higher* channel position. Thus if the oscillator cannot be made to tune the required three mc higher on Channel 2, the Channel 2 coil should be removed from the switch wafer and replaced with a coil meant for Channel 3, which has slightly less inductance. In some cases, it may be necessary to thus substitute coils on Channels 2 and 3, and perhaps even on Channel 4 as well, In each case, the coil for the next *higher* channel should be used for replacement.

If it is definitely established that coupling of the interfering oscillator radiation is taking place through the antenna and/or transmission lines, rather than directly between the chassis of the two sets, it is often helpful to relocate one or both antennas so that there is greater separation between them. The lines may also require relocating, although if both are properly installed, with a reasonable spacing and number of twists between standoffs, coupling between them is usually small.

The use of a series-resonant stub across the input terminals of the receiver causing the interference will also reduce the effect when the coupling is through the antennas and lines only, but these require a special switching arrangement to disable the stub when the setowner wishes to receive the channel to which it is tuned. For this reason, such remedies are seldom used, except as a last resort.

One other special type of local oscillator interference is worth mentioning. It is caused by oscillators in old Model TRK sets that have not been modified. In these sets, there is no r-f amplifier stage, and as a result the oscillator radiation is several times as strong as from later model sets, both from the chassis and from the antenna and line. While few unmodified sets of this type are still in service, the severity of the interference they can produce makes it necessary to deal with them directly when the trouble is discovered. One effective measure is to install an r-f stage between the receiver input terminals and the transmission line. The most effective measure is the use of a good booster of the channel-switching type, installed at the receiver, with the shortest possible leads between it and the set's regular input terminals. The oscillator frequencies of the TRK set are such that it can only interfere directly on Channels 3 and 5, but due to the strength of the radiation, it may affect receivers on these channels for several blocks radius.

FM Station Image Interference. – Trouble of this type occurs when the signal from an FM broadcast station on a suitable frequency reaches the input of a television receiver in sufficient strength. Thus an FM station on an assigned frequency of 107.5 mc can produce image interference in a television station tuned to Channel 2, if the FM station signal is very strong. This and other possible frequency relations for FM image interference can be seen in Fig. 42-1.

When the interference is clearly FM, similar to the patterns in Fig. 42-11 and Fig. 42-16, examine the chart of Fig. 42-1 to see if the frequency relationship is right for image interference, taking the frequencies of the channel affected and the local FM stations into account. (Such interference from *distant* FM stations is unlikely.) If this check shows that it may possibly be an FM image, make another test to make sure it is not a harmonic of the sound i-f of the TV receiver itself. To do this, remove the second sound i-f tube. If the trouble is due to a sound i-f harmonic, it will disappear when this is done. If it turns out to be image trouble, a quick check by adjusting the FM trap will show whether this circuit is having any effect. If it does not, it must be repaired or replaced. If it is working, adjusting it either way from its best setting will cause the interference to get stronger. In this case, find out from the owner how long he has had the interference, if you haven't done so already. If it came on suddenly, there's a chance that something is wrong with the line or antenna installation. Examine these carefully, and see if putting them in order and orienting for maximum TV signal on the Channel affected doesn't cure the trouble. If there is still trouble after this is done, and the FM trap in the set is working properly, it may be necessary to add another FM trap across the line at the input. A series-resonant stub may be used, or a a spare FM trap.

FM Station Harmonic Interference. – When a TV set is tuned to a Channel which is a whole-number multiple of an FM broadcast station frequency, harmonic interference is also possible. Thus a set tuned to Channel 9 may be interfered with by the 187.8 mc second harmonic of an FM broadcast station on 93.9 mc. This is very near the 187.25 mc picture carrier of Channel 9. In this case, three possibilities exist. The FM station may actually be radiating second harmonic. If so, other nearby receivers should show some interference also. Again, it is possible that external cross-modulation is taking place. If this is the case, it is still possible that other nearby receivers will have trouble, but it is likely that the trouble will cover a much smaller area.

The third possible cause of such harmonic interference is that the FM carrier reaches the TV set's r-f stage grid at such great strength that the harmonic is being generated at that point. In this case, other sets nearby may or may not have the same kind of trouble. A test of the FM trap for effectiveness by changing the adjustment and watching for a change in the interference will show whether it is working or not. If it is okay, the same remedies given for image interference should be tried. It sometimes happens that a broken line connection, or trouble with the antenna will change the proportion between the TV signal and the FM signal sharply in favor of the FM station, and this possibility should not be overlooked, even when signals on most channels seem okay.

If it turns out that the harmonic results from external cross-modulation, an inspection of the roof may reveal the cause, in the shape of an old haywire broadcast antenna made of wires twisted together without soldering, or something similar. The remedy is removal, or repair by carefully soldering all joints. If the source cannot be found, the best hope is reorienting or relocating the antenna to secure greater TV signal in proportion to the FM interference.

Industrial, Scientific, and Medical (ISM) Apparatus Interference. – This heading includes diathermy and industrial r-f heating equipment, and is the classification used by the FCC for such apparatus. When the interference patterns resemble those of Figs. 42-7 or 42-15, compare the frequencies of the Channels concerned to the frequencies assigned to ISM use, and also the harmonics of those frequencies. Also, consider the location, and the on-and-off cycle of the interference. If you are near a Doctor's office or factory these are likely sources of the trouble. A trial with a high-pass filter at the input terminals should be made, particularly if the set is a relatively early model. Bear in mind that if factory r-f heating equipment is responsible, there may be several machines whose frequency and duty cycles will probably not be exactly the same. If the high-pass filter produces no effect, the interference must be entering directly on the chassis or i-f wiring, or through the power line. Try the effect of a power line filter, and also check the condition and orientation of the antenna, to make sure the TV signals are reaching the receiver properly.

In areas where the adjacent sound trap is not needed, because there is no TV station on the channel adjacent to the one affected, try adjusting the sound trap carefully to reduce the interference to a minimum, observing for serious loss of picture detail. If the interference is not too far into the passband of the picture i-f amplifier, little loss of picture detail will result. If this remedy causes too much loss of picture detail, it may be necessary to change the i-f passband in a way similar to that described in avoiding local oscillator interference.

One effective method is to tune the adjacent sound trap in the set to reduce the interference to a minimum, and then remove the set to the shop, taking care that nothing disturbs the setting of the trap. In the shop, the i-f passband is moved *away* from the trap tuning far enough to minimize the interference, taking care to realign the oscillator properly. The set is then returned, taking along an extra pair of similar traps to eliminate the last traces. One of these should be connected in series with each line conductor at the receiver input, and tuned to parallel resonance, so that they offer high series impedance to the interfering signal. This procedure is only effective where the frequency of the interference is reasonably steady, of course.

Where the interference frequency wanders enough to make the above method useless, it may be necessary to line the inside of the cabinet with copper or brass screen and ground it carefully, relocate and reorient the antenna for greater TV signal, or use an antenna with greater gain.

Shortwave Transmitter Interference. – This type of trouble produces the characteristic slanting line patterns of Fig. 42-10 and Fig. 42-21.

Due to the large number of possible sources as discussed earlier, interference of this sort may be entering the receiver by any or all of the possible channels, and they will have to be eliminated one at a time. The interference may be unmodulated, keyed, or AM or narrow-band FM, and its on-and-off cycle may be erratic. In addition, it may show considerable frequency changes, since some communications services have several frequencies or bands assigned for their use. Also, the interfering frequency may not be the assigned carrier frequency of the station, but radiation of a fundamental or harmonic from a stage preceding the final amplifier, as described in Section 42-3.

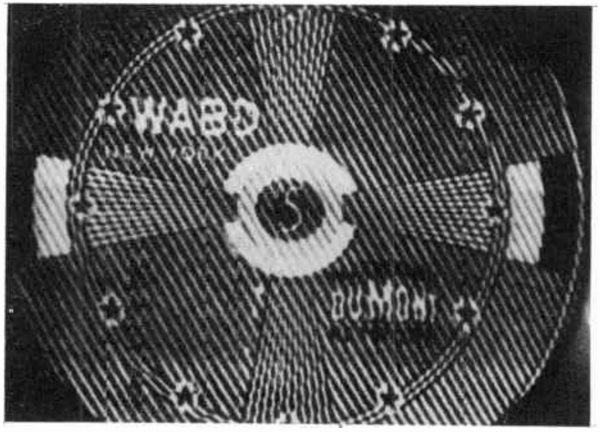

Fig. 42-21

A good beginning is to try all active TV channels. If the interference is severe on several channels, perhaps with negative picture effect on one or two, it is likely that the interference is due to the fundamental frequency of the shortwave transmitter overloading the r-f stage of TV receiver. A trial with the high-pass filter at the input may show good results, particularly in the receivers that have less rejection below the television channels. While making this and other tests, the nature of the interference should be observed, if it varies. Thus rapid on-and-off characteristic of Morse code indicates definitely the transmitter concerned is in communications service. AM or narrow-band FM modulation coupled with a rather erratic on-and-off cycle also suggest a communications transmitter.

Another test worth making early because of its convenience is to try a filter in the a-c power line. If the high-pass filter and/or the a-c line filter show substantial improvement, it is likely that further work on blocking other channels of entry will clear up the trouble.

If the modulation of the interference can be heard, the service in which the station causing it operates may be discovered from the program material. This even applies to Morse code, if you can read it, particularly in the case of amateur stations, which make their call signs frequently when on the air. It is important to try to identify the radio service in which the station operates (taxi despatching, police, amateur, broadcast, etc.) because when this is known, the frequency may be determined from the FCC assignments. The chart of Fig. 42-1 will also help.

When the interference is very strong, it is quite likely that the receiver will operate abnormally, and it is almost certain that some of the effects will be confusing. However, a very strong signal is itself a helpful clue, and possible nearby sources should be considered.

Strong interfering signals can often be seen on the screen on several channels as a result of cross-modulation between the TV station and the assigned operating frequency of the transmitter, rather than by harmonic radiation.

If study of the interference characteristics reveal the frequency, a stub or trap for that frequency should be tried across the receiver input. If the interference frequency varies, only a band-rejecting device like the high-pass filter is likely to help. In any case, *all* the paths by which the interference is entering the set must be blocked, when it has been determined that the interference is due to radiation of the fundamental frequency.

Every effort should be made to correct the trouble at the receiver, as this is usually much more accessible, and does not involve a ticklish and time-consuming job of locating the offending device, and perhaps getting permission to work on it. Nevertheless, harmonic or other improper radiation from the source remains a possible source, and must be dealt with when everything practicable has been done at the receiver installation.

The possibility of interference at several different frequencies and pickup in several different ways should not be overlooked. For instance a trap tuned to 14 mc and placed in the antenna might almost eliminate the interference. If a further use of 14 mc attenuation in the antenna has no effect the remaining interference may be a second harmonic (28 mc) radiated by the transmitter. Also, it might be entering the receiver via the power line.

In conclusion, very strong fundamental signals even without any improper radiation may require use of added high-pass and a-c line filters, shielding of chassis; careful location and orientation of antenna for best TV-to-interference signal ratio, and possibly even installation of coax or Twinex line, if the twin-lead line is picking up the interference strongly. Use of stubs at receiver input and perhaps also at the antenna may help, if the interfering frequency is always at the same frequency.

Sound I-F Harmonic Radiation. – Harmonics of the sound i-f signal in the TV receiver occasionally cause interference in the same set, by getting back into the front end. They appear in the picture, and look like any other FM carrier, but can be identified by pulling the second sound i-f tube, which removes this kind of interference. Sets using a built-in or indoor antenna are more likely to be affected, and any means for getting the antenna farther away from the set is likely to help, as the radiated harmonic declines in strength very rapidly as the antenna is moved farther from the set. If the interference is not always present, but occurs only at times, it is barely possible that another set very near to the one affected is causing the trouble.

In a typical case, such as Channel 3 being interfered with by the sound i-f third harmonic (63.75 mc), it is clear that the harmonic is actually within the proper passband of the channel. Similar trouble can occur on certain other channels, which can be determined by simple arithmetic, as in this case.

In sets using the built-in antenna, it frequently helps to move the antenna from below to above the chassis within the cabinet. In sets having such an antenna, but using some other antenna for actual reception, such as a nearby indoor or window antenna, removing the built-in antenna from the cabinet may clear up the trouble. Shortening the leads on the sound i-f bypass capacitors, and relocating the point at which they are actually soldered to ground will often make a considerable improvement. This should be done one capacitor at a time, starting with the last stage and working back toward the first.

In the case of the 721 series of receivers, a special cure can usually be accomplished that is not applicable to other sets. A 4-inch length of insulated hook-up wire, preferably solid, is soldered to the test point used to measure converter bias, working through the hole in the side apron of the chassis. This wire is then taped flat against the chassis, and its length is adjusted carefully by cutting off small pieces while observing the effects on Channel 2 and 5, which are most seriously affected in this set. The desired result is to make the interference negligible on Channel 2 without causing it to appear in Channel 5, and the length of the wire for this effect is fairly critical. It must be securely taped in place when the correct adjustment is found, to prevent change later.

For extreme cases in the 721 series, it may also be necessary to relocate and trim the by-pass capacitors. If the trouble has appeared suddenly, better check the antenna and line, for any condition that might have reduced the signal strength, particularly on Channel 5, as this is critical. If Channel 5 is normally very weak at the location, the wire remedy described above may not be feasible. Also check the tightness and good contact of the sound i-f shield cans where they are used, as this may be a source of trouble. Be sure to watch the interference pattern when these are touched, as a very slight pressure or movement may show definite results.

In the intercarrier sets, trouble from this source is practically impossible, due to the low frequency (4.5 mc) of the sound i-f.

Picture I-F Channel Harmonics. – As in the case of the sound i-f channel, harmonics of the picture i-f signal are produced, and may sometimes be radiated strongly enough to enter the front end and appear as interference. A quick test for this condition is to bring the line up near the last picture i-f stage, removing the tube shield if necessary to make the effect clearer. If the suspected interference pattern changes in correlation with this movement of the line, it is clear that i-f harmonics are the cause. Its actual appearance is no different from any other r-f carrier pattern, as can be seen in Fig. 42-3.

Many of the cures described for sound i-f harmonics are also effective in dealing with this condition. The same points about the antenna should be considered, and the contact of all tube and coil shields concerned in the i-f amplifier should be tight. The same treatment of the by-pass capacitors may also be required, and any means for increasing the ratio of desired signal to harmonic should be used, such as moving or reorienting the antenna, leading the line away carefully for minimum coupling, and so on. It may sometimes help to try a different tube in the last picture i-f stage. The most serious source is the picture detector, however, and since it must be nonlinear in order to do its job, about the only effective measure is to see that the shielding and bypassing are in proper order.

Very rarely, such radiation from one receiver may affect another located near it. This can be checked by switching the suspected set off for a moment. Such trouble is usually cured when the interference in the guilty receiver itself is reduced to a tolerable level.

Regeneration. – Strictly speaking, regeneration is not interference, unless the set actually breaks into oscillation, in which case the typical pattern of an r-f carrier beating (heterodyning) with the carrier of the desired TV channel will appear. However, regeneration causes undesirable effects, even when it is not great enough to cause oscillation, and it must be corrected. If a suspected r-f carrier interference pattern shows up in all or nearly all channels, and looks much the same in each, oscillation in the i-f amplifier or overall through i-f and r-f is likely. On a channel with a very strong TV carrier, the effect may not occur, because the developed bias may hold down the gain far enough to prevent oscillation. Internal oscillation of this sort differs from external interference that also appears on nearly all channels because it seldom appears as strong. For external signals to affect most channels, they must nearly always be of such strength as to cause negative picture effects on at least one or two channels.

If regeneration is occurring without oscillation, it causes a smudge in some part of the vertical wedge, indicating that the gain is excessive at some one frequency in the i-f passband. In sets having a manual control for the i-f gain (contrast control), reducing the gain will have an effect on the smudge. Setting the gain to maximum in such a set will normally cause overload on a good signal, but will not cause it to break into oscillation. Try this, and if oscillation occurs, the trouble is almost certainly regeneration. Another reliable test in any set is to measure the picture detector output voltage on the 10-volt scale of the Simpson multi-meter. If the reading is much more than the normal 2½ to 4 volts on an average channel, regeneration is likely. This reading can be made from the top, without removing the chassis, in many sets.

Regeneration is usually due to a defective by-pass path, such as would be due to an open capacitor or high-resistance joint, or to misalignment of an i-f coil. If the trouble appears suddenly, after the set has been operating normally for some time, the by-passing is the most likely cause. If it has developed gradually, it is possible that drift of a tuned circuit has caused it, or possibly, gradual corrosion in a soldered joint.

A rough check on the tuning of the i-f coils can be made by bringing your hand or a metal tool near each unshielded one in turn, while watching the effect in the picture. This will cause some change in the tuning of the coil concerned, and a change in the one causing the regeneration, will cause the effect to either increase or decrease. The cure here is retuning of the coil concerned, and in some cases, where all other adjustments seem to be in order, careful retuning of this coil a little at a time, while watching picture detail *and* the regenerative smudge may do the job. In other cases, the use of a sweep generator is usually necessary.

Where the symptoms and your tests indicate that bypassing of one or more stages is causing the trouble, joints and components should be gone over one at a time, so that the defect will be definitely identified when it is found. It is also worthwhile to try tapping tubes in the stages concerned, or replacing them one at a time with a tube known to be good. A bad pin contact in a socket may cause intermittent regeneration. Overall regeneration of i-f and r-f is less common, and usually shows marked difference between channels, which provides a way of checking for the condition. When it occurs, it may be due to misalignment or defective components or connections in the r-f and mixer tuned circuits on the channels affected, perhaps coupled with some i-f regeneration. Removing the r-f tube when tuned to such a channel frequently makes a significant difference that shows up the difference.

Fig. 42-22

Double Conversion. – As an example, Fig. 42-22 shows the effect of double conversion due to the FM sound signal of Channel 7 beating against the local oscillator signal for Channel 5, in the r-f amplifier of the receiver. Some other examples may be seen in Fig. 42-10. The way in which double conversion takes place was discussed in Sections 42-1 and 42-2. The most useful way to identify double conversion trouble is to consider closely the numerical frequency relationships involved, and the strength and pattern of the interference. In the case of Channel 7 on 5, as an example, a quick trial with enough line to form a temporary shorted half-wave stub to suck out the oscillator frequency, or the interfering channel frequency at the receiver input will suffice. The "short" may be formed with a piece of tinfoil, without cutting the line, as described earlier. In the case of other signals interfering by double conversion, this test can also be used, bearing in mind that the frequency relationship must be understood to make the test conclusive.

Cures for double conversion trouble will vary somewhat in the individual case, as with other interference problems. Any measure that will increase the signal on the desired channel as compared to that of the interfering signal will help. Thus reorienting, raising and lowering, or perhaps relocating the antenna may bring an improvement. A different r-f tube may reduce the effect (it may be more linear), and use of a tuned stub to reduce the interfering signal may be tried. If this happens to be a television signal, as when Channel 7 appears on Channel 5, the stub must be adjusted so as to reduce 7 just enough to make 5 usable, but not so far as to make 7 *un*usable. The resistor-terminated stub helps on this job.

Receiver Overload. – This is not actually interference, but may sometimes produce effects that are mistaken for it. If the set is severely overdriven by a television signal, it will cause cross-modulation, and then other signals may show up as interference. A bona fide overloading signal is usually found only on certain channels, unless the location is such that all transmitters are excessively close to the receiver, and even then, the antenna directivity may cause one or two to be normal. If removing the line from the input changes reception on the formerly overloaded channels to drop to normal or below, there is genuine overloading. With this test, most interfering signals seen before should also disappear, because of removal of the cross-modulation effect. If the receiver appears overloaded on all or nearly all channels, the condition may also be due to a defect in the i-f amplifier, such as low bias on a stage due to a leaky coupling capacitor, or a dead tube due to open filament. The test by removing the line will *not* correct the overloaded appearance, but will very likely cause some snow to appear in the "overloaded" picture.

Genuine overloading is corrected by adding a resistor pad of suitable value in series with the line, if all channels are strong enough to stand a reduction that makes the strongest channel usable. If a single channel is overloading, a stub for that channel across the input, perhaps with a modifying resistor termination is useful. If only the low-band channels are overloading, a .02 to .05 paper cap across the input may reduce these enough without affecting the upper channels. Alternatively, an inductive stub of small value may work as well. If the high channels must be reduced without affecting lower channels, a small *capacitive* stub will help, or a 1 or 2 mmfd ceramic capacitor may be tried. Still another way to reduce the low channels more than the upper ones is to cut the transmission line and slide the cut ends over each other until the desired effect is produced, after which the line is taped securely together.

An additional word about excess signal is in order. This may cause the strong station to appear through the picture on a nearby weaker channel. A stub for the strong channel is effective in such cases.

Co-channel Interference. – This sort of trouble may produce the Venetian Blind effect when it occurs, but this does not necessarily happen, because the practice of offsetting the carrier frequencies of the television stations concerned is now almost universal. In cases where there *is* interference, careful antenna orientation, or use of an antenna with higher front-to-back ratio or better directivity is most effective. It is relatively rare, excepting in a few locations and under unusual conditions of terrain or vagaries of propagation.

Adjacent Channel Interference. – This produces the windshield wiper effect described in Section 42-3, and shown in Fig. 42-14. Due to the way in which channels have been assigned to stations in various areas, this kind of interference is also rare, as it requires a rather strong signal on the channel directly adjacent in frequency to the one tuned in. This could occur between Channels 2 and 3 for instance, if a receiver was receiving Channel 2 at a location where the Channel 3 signal was very strong. Such locations are few, because the FCC has kept a minimum separation of about 100 miles between adjacent channel stations. The windshield wiper effect only shows when the higher numbered channel interferes on the lower channel. When the situation is reversed, the pattern seen is a coarse FM beat pattern from the sound carrier of the lower numbered channel. In practical cases, good antennas and careful orientation are almost certain cures, although a booster may also help.

Barkhausen Oscillation. – With improvement of tubes for the horizontal drive amplifier stage, and some other refinements, this trouble is also becoming rare. It still appears in some sets, showing the typical dark vertical bar or bars near the left edge of the picture. The way in which the oscillation occurs was described earlier in this Lesson, where Fig. 42-17 illustrates the appearance of the screen. A change of the horizontal amplifier tube, slight readjustments of the drive, perhaps accompanied by touch-up of linearity, or use of a small Alnico magnet near the tube, adjusted to minimum, are the most helpful remedies. Sets using built-in or indoor antennas are most likely to be affected, and relocating or reorienting such antennas usually helps, if a position can be found that gives a minimum on the Barkhausen while yielding good picture signals.

Noise. – The troubles caused by noise are perhaps more varied than any others, as the pictures of Figs. 42-5 and 42-18 show. In general, the most effective way of combatting noise is to increase the strength of the desired TV signals while reducing the strength of the noise, as it is frequently difficult or impossible to get at the source of the noise itself. This can be accomplished by using a higher gain, more directive antenna, carefully located and oriented for maximum signal and minimum noise. The line must also be considered, and if it must be lead through the region of heavy noise pickup, the feasibility of shielded line should be considered. Be sure that the line can't be run around the noise source, however, before going to this added trouble and expense.

Where ignition noise is the chief offender, moving the antenna back from the parapet, where the structure of the building acts as a partial shield between it and the street below may help. An antenna of greater directivity is particularly helpful when the noise arises from a source considerably off the direct line to the transmitters, as from a street intersection to one side of the signal path. In such cases, best results are sometimes had by turning the antenna until the worst noise is in the null off the end of the dipole, particularly if the TV signals are strong.

Noise also enters via the a-c line, but a simple test with a series line filter will quickly reveal how much help you can get from that angle. Unfortunately, even if the noise is stopped at the filter, the line may radiate it into the antenna anyhow, in which case the antenna and line measures already described should be tried.

Noises produced by electrical appliances can frequently be stopped at the source, if access to them can be had. In some cases, the TV setowner may also own the offending device, which makes the task much simpler. Small mica capacitors of .001 mf to .01 mf connected across all points at which current must be broken (where this will not interfere with operation of the device) usually are quite effective. A line filter at the device is usually impractical because of mechanical considerations, and it is much less effective at the wall socket, because of radiation from the appliance cord itself. It is seldom practical to shield the device, or the wiring leading to it, but the possibility should not be overlooked.

The most common single characteristic of noises generated by any device operating on line current is the familiar 60 or 120-cycle bar or bars, and the appearance of this symptom should immediately tip off a probable connection to the a-c line frequency.

Miscellaneous. – A few odd sources of interference difficult to classify are also worth discussion. FM and all-wave broadcast receivers use superheterodyne circuits, and the local oscillators of such sets are occasionally guilty of interfering in TV and other receivers. It is usually necessary to track down the offending set and make a trial by switching it off or detuning it momentarily before the source of the interference can be definitely established. A study of the chart of Fig. 42-1 shows where the FM receiver frequencies may fall. Note that the oscillator may be either above or below the station frequency, depending on the design of the particular receiver.

All-wave receivers are likely to be harder to find, because the wide tuning range lets the interference fall almost anywhere. When the set is habitually used to cover a certain frequency certain hours each day, there is a better chance.

In either case, the most effective measure is likely to be keeping the offending set as far from the TV set as possible, and reducing coupling between the respective antennas and transmission lines or lead-ins to a minimum. Alternatively, keeping the interfering set tuned for no interference, or turned off is about the only remedy. Radiation in such cases is unfortunately more from the chassis itself than through the line and antenna.

The matter of multipath FM reception has already been described, and there is little to be added. Whether the receiver affected is a television set or FM broadcast unit, about the only way to tackle the difficulty is to try reorienting or relocating the antenna, bearing in mind that small movements higher or lower may be more effective than any other measure. When a location and orientation has been found that gives a satisfactory result, the antenna must be carefully fastened to prevent subsequent shifting, as the adjustment is frequently rather critical. Such trouble occurs a little more often in regions at some distance from the transmitters, where the surrounding terrain is rather rough. It is necessary in attempting to improve matters on one station to make tests on others to see that they are not suffering. Since the effect is due to reflected signal energy combining with the direct signal, anything that changes the reflection point or characteristic may make the condition better or worse. For this reason, it may be wise to explain this to the setowner, as marked changes in the weather will often cause the effect to change also, which may result in a useless service call.

INTERFERENCE IN AM RADIOS

42-6. Aside from the causes of interference commonly encountered in AM sets, it is necessary to mention particularly interference from harmonics of the horizontal sweep circuit of TV receivers. This circuit handles considerable power, and is very rich in harmonics of its 15,750-cycle frequency. As a result, "birdies" (clear, tunable heterodyne whistles) may be heard in nearby broadcast receivers when the television set is operating. Such harmonics occur at whole-number multiples of the 15.75 kc frequency throughout the broadcast band, and are strongest in the lower part. Tuning the AM set across the broadcast band while the TV set is on will usually find some spot on the dial where a birdie from the beat between the TV sweep harmonic and a broadcast station is audible. If in doubt, switching off the TV momentarily will settle the matter by causing the whistle to disappear. The most feasible cure is usually to find a way to get more signal from the broadcast station to the to the AM receiver, possibly by means of an outside antenna. The AM set can also be moved farther away from the television, or if it has a built-in loop antenna, it can frequently be put in a position providing minimum pickup of the offending birdie. Not much can be done in the television set, except to check the usefulness of a line filter between it and the wall socket. In some TV sets, this will help, because the harmonics are being coupled back through the power transformer.

One other cause of such interfering whistles must be mentioned. Other AM radios, particularly small transformerless sets of the socalled a-c d-c type are also guilty of oscillator radiation, which can often cause interference in other nearby AM sets tuned to a station in the upper part of the broadcast band. A set of this sort tuned to 570 kc for instance will very likely have its oscillator operating about 455 to 465 kc above, depending on the maker's chosen i-f frequency, the condition of the set, and the accuracy with which the owner tunes it. If the i-f is 465 kc (a common choice) the oscillator radiates on 1035 kc, which makes a 5000-cycle whistle in any nearby receiver tuned to a station on 1030 or 1040 kc. Not much can be done to correct this, except by trying to orient the AM set for minimum pick-up of the interfering oscillator radiation.

One other source of interference in AM sets is what is called tunable hum. This is actually cross-modulation of an r-f carrier by an r-f carrier by 60 or 120-cycle hum from the power line. It can occur in low-priced sets of the a-c d-c type rather easily, because r-f carriers of all sorts are present on the power line, which acts as a giant antenna, and these signals reach the rectifiers of such sets more or less directly, where cross-modulation takes place. Of course there are electrolytic filter condensers following the rectifier, but these are rather poor filters at r-f, and frequently these 60 or 120-cycle modulated carriers show up in the tuning range of the AM set. In transformerless sets, shunting small mica or paper caps across the electrolytics may help, or putting one from the hot side of the a-c line to ground may do the trick. In all such tests, it is imperative to use a capacitor of ample voltage rating, at least 400, and preferably 600 volts for permanent installation.

This difficulty can also occur in sets having transformer-type power supplies, as is generally the case with AM tuners used in many console receiver combinations. The same remedies will often suffice, and and should be tried where practicable.

◆

NOTES

NOTES

NOTES

NOTES

TELEVISION SERVICING COURSE

PREPARED BY

RCA INSTITUTES, INC.
A SERVICE OF RADIO CORPORATION OF AMERICA

HOME STUDY DEPARTMENT
350 West 4th St., New York 14, N. Y.

LESSON FORTY THREE

TEST EQUIPMENT

43-1. Multimeters
43-2. Meter Precautions
43-3. Vacuum-Tube Voltmeters
43-4. Signal Generators
43-5. Sweep Generators
43-6. Additional Test Equipment

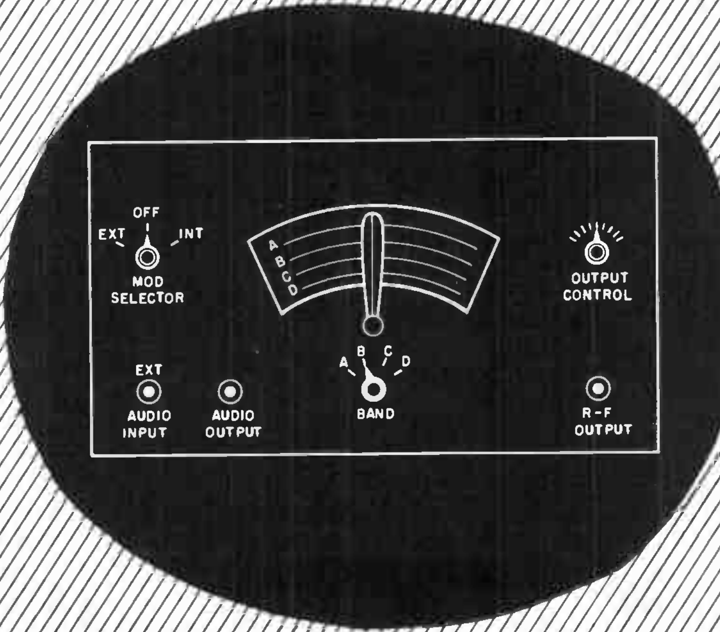

Lesson 43

MULTIMETERS

43-1. – A multimeter is simply a case containing a D'Arsonval meter movement and various associated circuits which can be switched into operation by selector switches. A common combination is a meter that will measure d-c voltages, d-c currents, resistances, and low-frequency a-c voltages. The Simpson Model 260 Multimeter, or "Voltohmmeter" is a typical instrument of this type. It is shown in Fig. 43-1. This meter has a sensitivity of 20,000 ohms per volt, which is adequate for at least rough voltage measurements and troubleshooting in the field.

The complete schematic diagram of this meter is shown in Fig. 43-2. This meter will be described here as an example of a typical multimeter but there are many other similar types that have the same applications.

Fig. 43-1

The selector switch in the center of the meter is made up of four "decks",

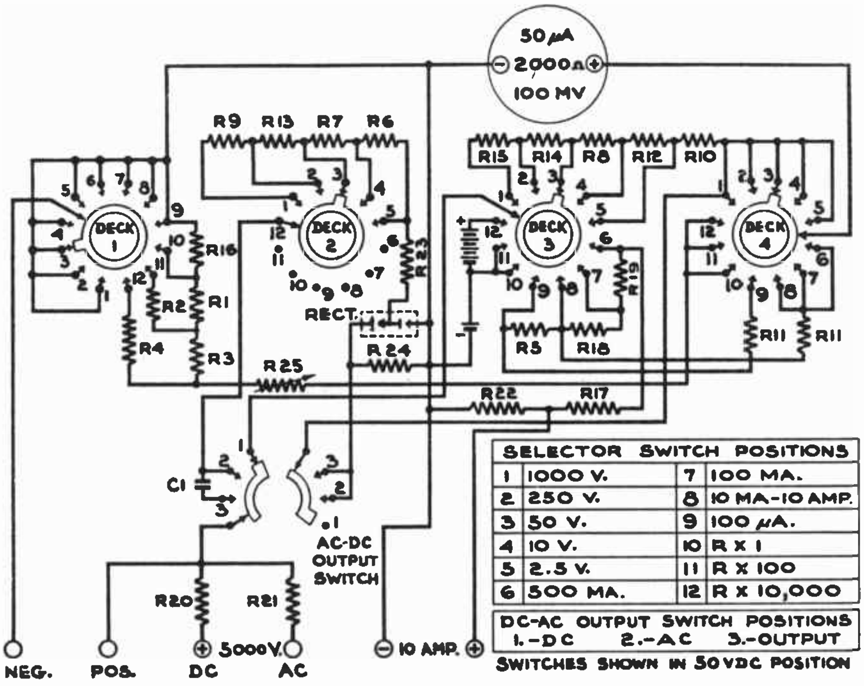

SELECTOR SWITCH POSITIONS			
1	1000 V.	7	100 MA.
2	250 V.	8	10 MA-10 AMP.
3	50 V.	9	100 μA.
4	10 V.	10	R X 1
5	2.5 V.	11	R X 100
6	500 MA.	12	R X 10,000

DC-AC OUTPUT SWITCH POSITIONS
1.-DC 2.-AC 3.-OUTPUT

SWITCHES SHOWN IN 50VDC POSITION

R1	1138 Ω
R2	110 Ω
R3	21,850 Ω
R4	117,700 Ω
R5	4,975 Ω
R6	7,500 Ω
R7	40 K Ω
R8	800 K Ω
R9	750 K Ω
R10	48 K Ω
R11	(TWO) 3000 Ω
R12	150 K Ω
R13	200 K Ω
R14	4 M Ω
R15	15 M Ω
R16	11.5 Ω
R17	0.475 Ω
R18	22.5 Ω
R19	2 Ω
R20	80 M Ω
R21	4 M Ω
R22	0.025 Ω
R23	RECT. SERIES CALIBRATED
R24	RECT. SHUNT CALIBRATED
R25	10 K Ω POT.
C1	.1 MFD 600 V.

Fig. 43-2

indicated on the diagram as deck 1, deck 2, deck 3 and deck 4. They are ganged together so that one knob turns all four.

D-C Voltmeter Circuit. – The d-c voltmeter circuit of the multimeter is shown in Fig. 43-3.

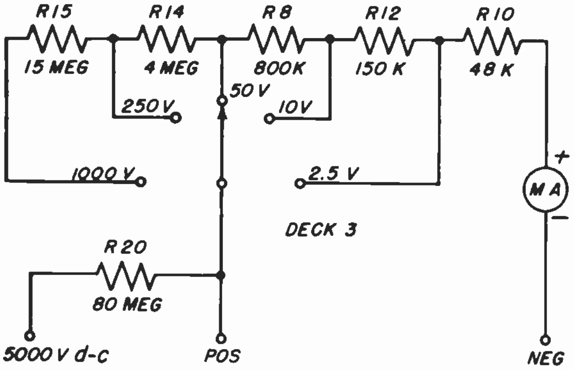

Fig. 43-3

For each of the d-c voltage ranges 2.5, 10, 50, 250 and 1,000 volts, the terminals marked POS and NEG are used; switching is accomplished by the selector switch. An additional range, to 5,000 volts, is provided by a separate positive terminal, in series with which is a multiplier resistance of 80 megohms. In tracing the circuit, remember that the four decks of the switch move together.

A-C Voltmeter Circuit. – The essentials of the a-c circuit are shown in Fig. 43-4. The DC-AC OUTPUT switch must be set in the AC position. Starting from the POS terminal, we can trace the circuit through the left half of the DC-AC switch, through deck 2, to the multiplier resistances.

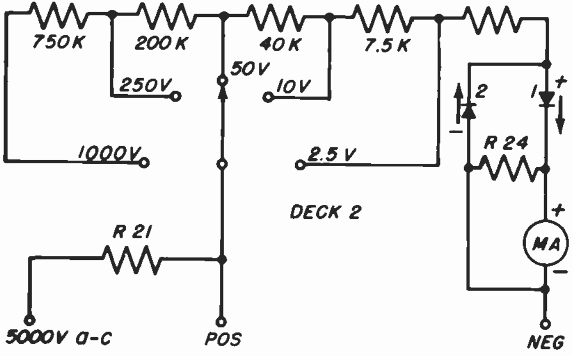

Fig. 43-4

With the selector switch set for the high range, the entire multiplier resistance is included in the circuit, and progressively less of it as the range is reduced. Tracing further, we find the rectifier, then the meter, and the NEG terminal.

The two rectifiers labelled 1 and 2 in the figure are used for a-c rectification. Note that on the positive half-cycle (when the POS terminal is positive), current flows through rectifier *1* and the meter. On the negative half-cycle, current bypasses the meter and flows through rectifier *2* and the multipliers as shown. (The reason for this circuit will be given later). Half-wave rectification is thus effected. *R*23 and *R*24 are precision resistors inserted for initial calibration purposes.

By using the AC 5000V terminal instead of the POS terminal, an additional voltage range is obtained. Note that the multiplier resistances used in this circuit are different from those used in the d-c voltmeter circuit. In the a-c circuit, both the series and shunt calibrating resistors affect the multiplier values required.

A-F Output Meter. – It is often necessary in audio work to measure the a-c component of the voltage across an amplifier load. An ordinary a-c voltmeter will not do for this purpose, because there is also a substantial d-c voltage across the load. For such measurements an output meter is required:

In this meter, the OUTPUT position on the DC-AC-OUTPUT switch places a 0.1 mf capacitor in series with the POS terminal. Thus, any d-c component in the applied voltage appears across this capacitor, and does not reach the meter.

With this circuit, a simple series rectifier such as the one previously discussed would not work. The first negative half-cycle would flow through the meter, charging the series' capacitor. But the charge could not flow back through the rectifier in the opposite direction, so no more current would flow through the meter. However, by using two rectifiers connected as shown in the diagram, all the negative half-cycles flow through the meter, and the capacitor discharges around the meter during the positive half-cycles. Except for the elimination of the 5,000-volt range, and the addition of the series capacitor, the output circuit is the same as that for the a-c voltmeter circuit.

At low audio frequencies, and particularly on the low voltage ranges, the reactance of the blocking capacitor causes a large error. At 60 cycles, the capacitative reactance is 26,500 ohms. The total multiplier resistance for the 2.5 volt range is 2,500 ohms. The total impedance effective in reducing the voltage across the meter is $\sqrt{26{,}500^2 + 2{,}500^2}$ or 26,618 ohms.

However, at higher frequencies the reactance goes down, and at higher voltage ranges the multiplier resistance goes up. Thus at 600 cycles, X_c is 2,650 ohms, and on the 50-volt range, R is 50,000 ohms. The impedance of the combination is within less than 1 percent of 50,000 ohms.

Volume-Level Meter. – In some types of audio work a-c voltages often are read in decibels (db). An additional scale on the Simpson meter makes possible direct readings of decibels. Used in this way, the meter is referred to as a *db meter* or *volume level meter.* No new circuits are involved; the only difference is the unit in which the measurement is made. Corrections must be made according to the resistance across which the measurement is made. This will be discussed further when we cover the db scale in a vacuum-tube voltmeter.

D-C Ohmmeter Circuit. – A simplified diagram of the ohmmeter circuit is shown in Fig. 43-5.

The circuit can be traced as follows: from the POS terminal through the DC-AC-OUTPUT switch (in the DC position) and deck *3* to a 1.5-volt battery. This connects with a network of resistors across which the meter is connected. Deck *1* of the selector switch places a small resistance in shunt with the meter, and large resistances (including the ZERO ADJ rheostat) in series with it, for the low resistance range. For the higher ranges, the selector increases the shunt resistance and reduces the series resistance. For the R x 10,000 range, an additional 6-volt battery is switched into the circuit.

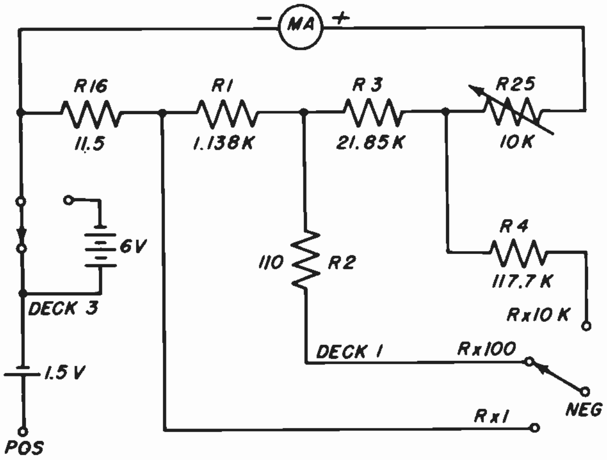

Fig. 43-5

A study of the diagram will indicate that this is a combination of the series and shunt ohmmeter circuits previously discussed. Note that the ZERO ADJ switch must be reset each time a different ohmmeter range is used.

D-C Ammeter Circuits. – The circuits for the ammeter or milliammeter and the microammeter ranges are shown in Fig. 43-6.

Notice that for all the current ranges except the 10-ampere range, the POS and NEG terminals are used. For the 10-ampere range a separate pair of terminals is provided.

Simpson Meter Applications. – In addition to its advantages in television servicing, this meter is adaptable to many radio applications, for which a meter of lower sensitivity would be unsuitable. Some of these are listed below:

Measuring Grid Currents: The Model 260, with its

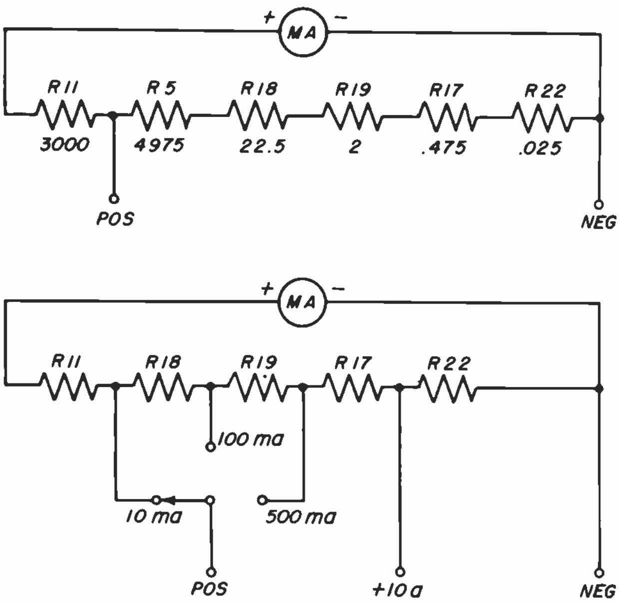

Fig. 43-6

100-microampere scale, is sensitive enough to measure grid currents of many tubes. A readable value as low as 1 microampere can be obtained.

FM Alignment: By reading the voltage across the grid resistor in a stage that draws grid current, a reading can be obtained that indicates the amplitude of the grid signal.

AVC Diode Circuits: An ordinary low sensitivity meter cannot be used across an AVC network because low resistance alters the constants of the circuits. The Model 260, however, requires so little current that sufficient indication can be obtained to determine if the AVC circuit is functioning.

High-Mu Plate Voltage: High-mu tubes require a high-resistance plate resistor. For this reason a low-resistance meter will not give a satisfactory recording.

Bias of Power Detector: A power detector uses a high-resistance cathode resistor. A high-sensitivity meter is essential for reading the bias voltage on such a tube.

Capacitor Tester: Capacitors can be roughly tested for shorts and leakage, using the R x 10,000 ohmmeter range. A shorted capacitor will cause a large deflection of the pointer, and a capacitor with high leakage will show a partial deflection. A further discussion of this last application is given in the Simpson meter manual, which points out that in checking electrolytic capacitors, special caution must be taken to avoid applying the ohmmeter voltage to the capacitor with the wrong polarity. It also discusses a method of rough checking paper capacitors with the a-c voltmeter section of the meter.

METER PRECAUTIONS

43-2. Certain precautions must be observed in using test instruments, if accurate readings are to be obtained. The most important of these are:

Selecting the Proper Scale. – When using any meter, it is essential to select the proper scale, to prevent burning out the coil or slamming the needle against the stop. Another good reason for this precaution has to do with accuracy. We should select a range high enough to prevent the needle from going off scale, and at the same time one which will give the greatest deflection of the needle. Suppose we measure 8 volts on the 0-10V range of a voltmeter. If the instrument has an accuracy rating of 2 percent, the readings would be correct within .2 volts. On the 0-100V range, however, the reading would only be accurate within 2 volts, and for the 0-1000V range within only 20 volts -- in the last case, with a possible error larger than the voltage being measured!

Selecting the proper scale is especially important when measuring resistance. If a high resistance range is used to measure a small resistance, the meter will show practically no resistance, which might be interpreted as a short. Conversely, if a low-resistance range is used to measure a high resistance (such as checking a 1-megohm resistor on a 0-2000 ohm scale) the meter will indicate "infinity", as if the resistor were burnt out.

When the value of the resistance is unknown, it is a good practice to check it on several ranges, to make sure of an accurate reading.

Zeroing the Ohmmeter. – When making resistance measurements, it is important that the meter be "zeroed"; that the needle points to zero when the ends of the test leads are shorted. If the needle does not point to zero, the *ohms adjust* control (sometimes called the "zero ohms knob") must be turned until the needle does indicate zero. This must be done for each resistance range of the instrument before the range is used. If it is necessary to switch from one scale to another, this zeroing process must be done for each change of scale. Failure to zero the ohmmeter may result in large measuring errors.

When it is no longer possible to bring the pointer to zero by the zero-ohms control, the battery or batteries of the instrument must be replaced.

Before making any resistance measurements in a circuit, be sure that the power to the circuit is turned off, or damage to the instrument may result. It is good practice to wait several minutes to permit large capacitors (especially in power supply filter circuits) to leak off their charge to ground. To make sure that no charge is left, a low resistance, say 50 ohms or so, can be connected across the capacitors for a few seconds. This will rapidly dissipate the stored charge and prevent damage to the ohmmeter. In multimeter type instruments, the range selector switch should never be left in a resistance measurement position when the meter is not in use, because the test leads may become shorted and run down the internal battery.

Loading Effect of Meters. – Any voltmeter, no matter what its sensitivity, will give a correct voltage reading when connected directly across a low-resistance source, such as a battery. However, if the source has a high resistance, or the measurement must be made across one of two or more high resistances in series, the sensitivity of the meter will greatly influence the reading. If a low-sensitivity meter is used, extremely large errors will result. This is because the low resistance of the meter reduces the effective resistance across which the voltage is to be measured, and thus reduces that voltage. Another way of explaining this action is to consider that if the meter requires, for full-scale deflection, a current comparable to that flowing in the circuit to be measured, it "steals" some of the current from the circuit. This is the current which causes the potential difference across the resistor being measured, and thus the meter will give an incorrect reading. This is known as the "loading effect" of the meter.

To give correct readings, the meter must not be permitted to load the circuit under test, or otherwise disturb the current and voltage conditions. Therefore, the meter must have a high sensitivity. The higher the resistance of the voltmeter, as compared with the resistance across which the voltage is to be measured, the closer will be the reading to the correct value. To reduce the error to about 10%, the meter resistance should be at least 10 times the resistance across which the measurement is to be made.

Thus, a 2000 ohms/volt meter, having a resistance of 400,000 ohms (on its 200 volt scale) could be used with an accuracy of about ±10% for measuring voltages across resistances of 40,000 ohms or less. A 20,000 ohms/volt meter, with a resistance of 4 megohms would give a reading within about 1% across 40,000 ohms.

Frequency Characteristics of Meters. – The frequency characteristics of voltmeters differ widely, and can be extremely troublesome at the high frequencies encountered in television work. Rectifier meters designed for use at low frequencies are accurate only within a certain range. At higher frequencies, two factors contribute to reduced accuracy. The shunt capacity between the test leads tends to reduce the a-c voltage applied to the rectifier, as well as to detune resonant circuits across which the meter is applied. Also, the rectifier itself acts as a capacitor, and current tends to flow through the meter in both directions as the capacitative reactance of the rectifier falls off with increasing frequency. The meter response then approaches that of a simple d-c meter in an a-c circuit, which is zero. At high frequencies, therefore, the reading of the meter will be substantially less than the true value. This is particularly true of meters using copper-oxide or similar plate-type rectifiers.

High Voltage Precautions. – In television servicing, high-voltage measurements often are necessary. A few simple rules will prevent needless accidents. Keep dry and stand on insulated flooring when making measurements. Use an alligator or other clip-type lead for ground, so that only one hand is needed to hold the high-voltage prod. Keep fingers well away from the uninsulated portion of the prod. Do not connect the meter ground to a high-voltage point. In some cases, the potentials may be injurious or fatal.

VACUUM-TUBE VOLTMETERS

43-3. We have seen that for measuring voltage drops across high resistances, a high-sensitivity meter is needed. High sensitivity implies high input resistance. But the input resistance is limited by the sensitivity of the movement itself. However, we can increase the input resistance of the meter by the use of a vacuum-tube circuit.

Suppose we put a milliammeter in the plate circuit of a triode, as shown in Fig. 43-7.

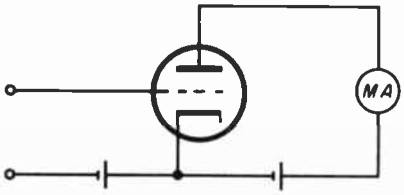

Fig. 43-7

The triode is biased to cut-off, so that with zero voltage applied to terminals 1 and 2, the plate current is zero. But a voltage applied to these terminals will cause plate current to flow, and the milliammeter can be calibrated directly in terms of the input voltage.

If the tube's transfer characteristic is reasonably linear, and a sine-wave a-c voltage is applied to terminals 1 and 2, the meter readings will be nearly proportional to the amplitude of the applied voltage. Under these conditions the circuit is that of a plate detector.

There are hundreds of possible d-c vacuum-tube voltmeter circuits, all of which operate on the principle of measuring the current in one part of the vacuum-tube circuit in terms of a voltage applied to another part.

The RCA Voltohmyst, a typical meter of this kind, uses the balanced-bridge circuit.

Balanced Bridge Circuit. – The essentials of a balanced bridge circuit are shown in Fig. 43-8.

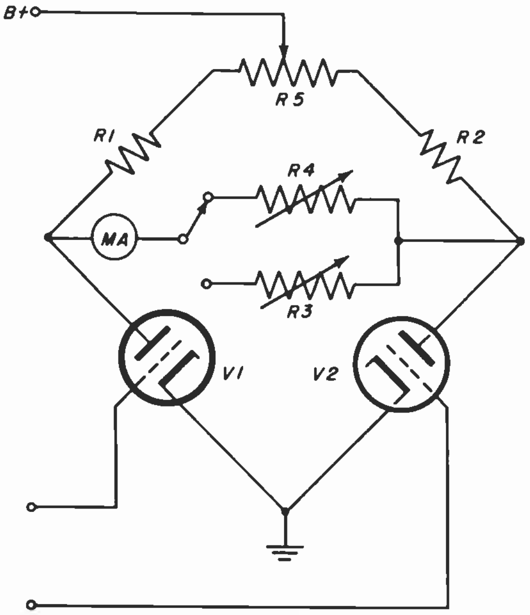

Fig. 43-8

Variable resistor R5 makes it possible to obtain a zero reading on the meter even if tubes V1and V2 are not identical. With resistors R3 and R4, either of which can be switched into the circuit by switch S, the circuit is further balanced, so that a voltage applied to the grid of V1 will draw exactly as much plate current as the same voltage applied to the grid of V2 -- even though the characteristics of the tubes differ slightly.

Since the voltage across the bridge is the plate supply for both tubes, a voltage applied to the grid of either tube will cause the tube to draw current, and the bridge will become unbalanced. Some of this current must come through the meter, which will indicate a reading. The circuit will measure either positive or negative d-c voltages with respect to the ground point of the meter.

We can extend the range of the voltmeter by inserting a voltage divider between the input terminals and ground, making the divider resistance high enough that it will be higher than any resistance across which we may want to measure a voltage.

The Diode Probe. – A peak-reading meter usually consists of a d-c vacuum-tube voltmeter of high input resistance, equipped with a diode probe.

The function of the diode probe is to overcome the drooping frequency characteristics of most a-c meters at high frequencies, caused by the rectifier acting as a capacitor and passing current in both directions, the shunt capacities of leads and wiring, etc.

To partly overcome the first problem, we can use a diode instead of a plate-type rectifier. Shunt capacities can only be reduced, however, by effecting rectification at the point where the a-c voltage is to be measured. Then the leads carry only d-c, and the effect of the capacity between them is practically zero.

This can be done by using a test probe which has a small diode rectifier in its handle. The construction of a typical diode probe is shown in Fig. 43-9.

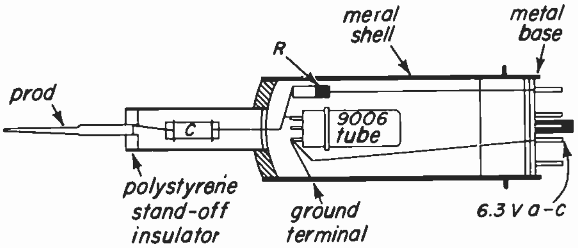

Fig. 43-9

The prod is connected in series with a capacitor of about 500 mmf and a 5-megohm resistor. A miniature diode is shunted across the circuit. These three components are enclosed within a metal shell, to which the ground lead is connected. The probe cable also carries the heater supply for the diode. Special insulating materials such as polystyrene, whose power factor is substantially undimished at ultra-high frequencies, are used at critical points.

Fig. 43-10 is the equivalent circuit of a typical probe.

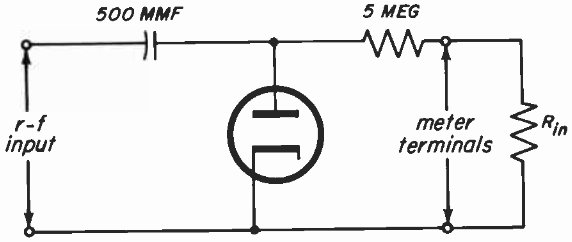

Fig. 43-10

This is the familiar clamper-circuit which is the basis of the d-c restorer in the television receiver.

R_{in} is the input resistance of the d-c vacuum-tube voltmeter with which the probe is used. Its value will usually exceed 10 megohms, which is the same on all scales.

On the positive half-cycle, the potential of terminal *1* rises with respect to terminal *2*. Because the voltage across the capacitor cannot change instantaneously, the diode plate also goes positive. The diode therefore conducts, charging the capacitor to the positive peak-voltage. When terminal *1* goes negative with respect to terminal *2*, the diode plate also goes negative and cannot conduct. The capacitor cannot discharge through the rest of the circuit, due to its time constant, and retains all but a tiny fraction of its charge until the next positive half-cycle recharges it fully.

The capacitor acts like a battery, with a voltage equal to the positive peak of the r-f voltage. This d-c voltage, less the drop in the 5-megohm resistor, is applied to the meter, with the meter input terminal negative with respect to ground. Meanwhile, r-f current flows for only a small fraction of each positive half-cycle, just long enough to replace the charge which has leaked off the capacitor. This r-f current drain is so small that the probe may be considered to present an infinite impedance to the r-f.

Shunt capacities of the probe across the r-f source may be limited to 3 or 4 mmf by proper probe design. This is not enough to detune even a high-frequency resonant circuit appreciably.

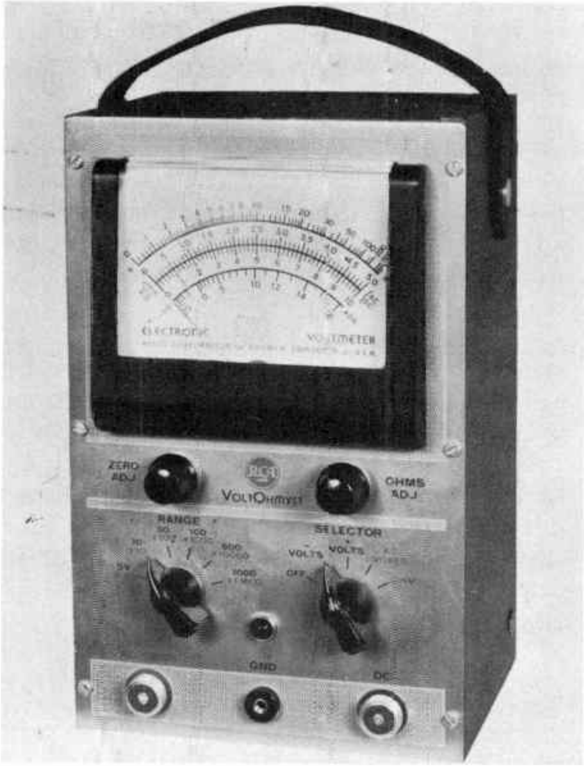

Fig. 43-11

The meter, of course, must be calibrated for use with the probe. This calibration is usually done in terms of the rms value of a sine wave a-c input. From this, the peak value may be computed easily by multiplying the reading by 1.414. But notice that the reading depends only on the positive peak value of the input. If the input is not a sine wave, the same multiplying factor may be applied to find its positive peak value.

The RCA Voltohmyst, Type 195-A. – The vacuum-tube voltmeter is largely a bench instrument, seldom taken out of the shop. It is highly accurate for measuring d-c voltages and resistances over a wide range, as well as a-c sine wave voltages in the audio frequency range. With the addition of a diode or crystal probe, it can be used for r-f voltage measurement; in this application it is a peak reading meter.

Figure 43-11 shows the RCA Voltohmyst, model 195-A. The complete schematic is given in Fig. 43-12.

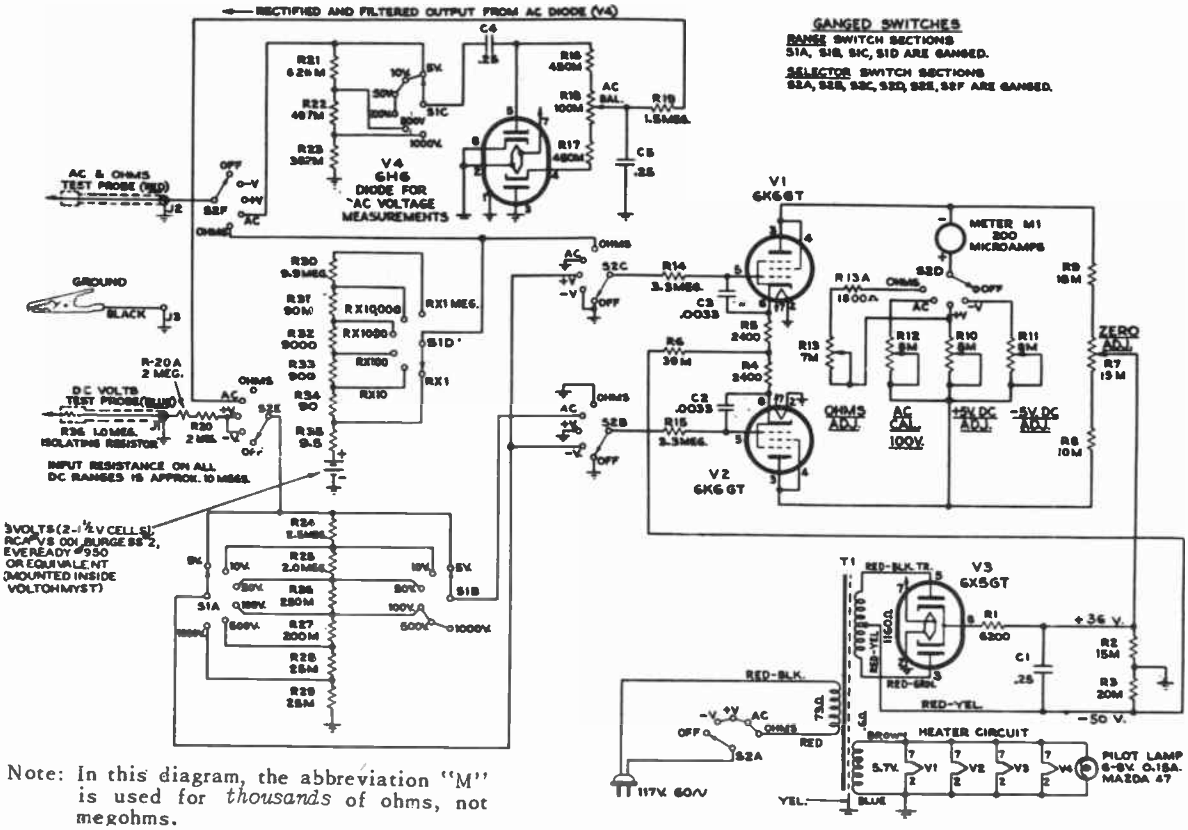

Note: In this diagram, the abbreviation "M" is used for *thousands* of ohms, not megohms.

Fig. 43-12

The Vacuum-Tube Bridge. – The two pentodes V1 and V2, operating as triodes, are the vacuum-tube arms of the bridge. They are operated at less than the rated heater voltage of 5.7 volts to insure longer life. This low heater voltage is permissible because of the small plate current required -- 500 microamperes at zero signal voltage. This in turn permits a plate supply voltage of only 86 volts.

The plate voltage comes from a conventional power supply containing a transformer, full-wave diode rectifier and filter, as shown in the diagram.

R9, R8 and R7 correspond to R1, R2 and R5 of Fig. 43-8. Cathode bias resistors R5 and R4, and the common cathode resistors, R6, have been added.

Suppose a positive voltage is applied to the grid of V1. Its plate current will increase, but this plate current flows through both R5 and R6, and the voltage drop across both of these resistors will increase. Since the low end of R6 is at a fixed potential determined by the power supply, and the V2 grid is at ground potential, the increased drop across R6 has the effect of raising the potential of the V2 cathode with respect to its grid, thus decreasing the V2 plate current. This in turn increases the potential across the meter, aiding the V1 grid voltage in its effect on the meter deflection.

*R*6 has another function. If its value is high, the operating plate current of 500 microamperes is determined almost entirely by *R*6 and the grid-bias voltage. If the drop across *R*6 caused by 500 microamperes is the same as the grid bias, the operating plate current of 500 microamperes is maintained regardless of fluctuations in the line voltage. Hence no voltage regulating system is needed in the power supply.

Of the four calibrating resistors in series with the movement (*R*10, *R*11, *R*12 and *R*13), three do not need adjustment each time the meter is used. All but the OHMS ADJ are located on the chassis, inside the meter case, and only need adjustment occasionally. The same is true of the AC BAL. adjustment, *R*18. Instructions for occasional calibration adjustments are given in the Voltohmyst instruction manual.

In using any vacuum-tube voltmeter, you should allow the meter to warm up for 10 or 15 minutes before making any adjustments or readings. Otherwise, accuracy may be lost.

D-C Voltmeter Circuit. – Let us examine the d-c voltmeter circuit. There are two selector switches, *S*1 and *S*2, one with four decks of contacts, and one with six, ganged together. In tracing through any circuit, note the position of each deck. *S*1 is a range switch, *S*2 is the function selector. With the switches set for plus volts, and the 10-volt range, the active circuits are shown in Fig. 43-13.

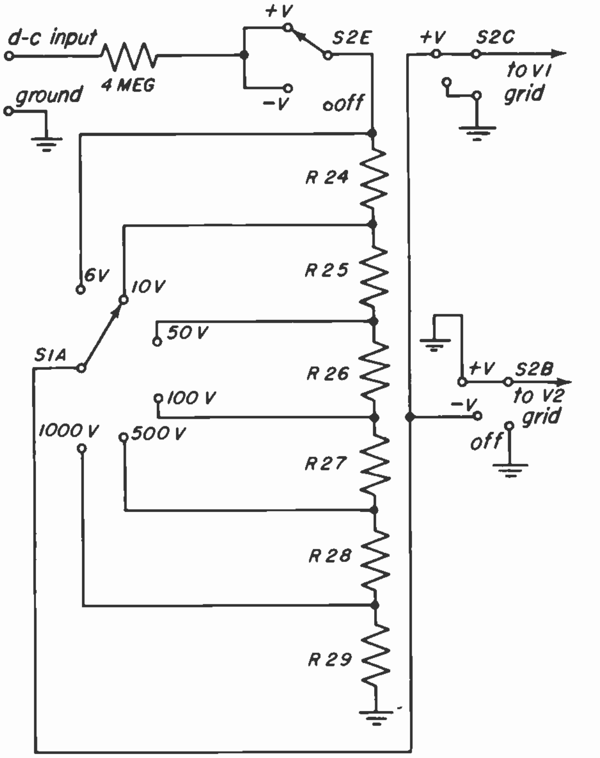

Fig. 43-13

Six ranges are available -- 0 to 5, 10, 50, 100, 500, and 1000 volts. Notice that the six resistors *R*24 through *R*29 form a voltage divider; they are not series multipliers. The voltage to be measured is impressed across the entire six resistors, and a portion of this voltage applied to the grid *V*1, biasing it positive with respect to ground -- a large part of it for the low ranges, a much smaller part for the high ranges. Between the input lead and the function switch is a total of 4 megohms, which does act as a series multiplier. The total input resistance is that of the voltage divider, plus the 4 megohms -- a total of 9 megohms. An additional 1 megohm is included in the d-c probe as a shielded isolating resistor, making a total input resistance of 10 megohms.

High-Voltage Probe. – For television use, the d-c ranges available on the Voltohmyst are adequate for all measurements except one -- the second anode voltage on the picture tube of a television receiver. This voltage may be as high as 16,000 volts on some sets, and its measurement requires a special high-voltage probe. This probe is not part of the standard Voltohmyst, but is made specially (by RCA Service Company) for this purpose. It is a long polystyrene tube containing nine 110-megohm resistors, which absorb most of the high voltage and prevent undue loading of the receiver circuit. The resistance in the probe, plus the 10 megohms of the vacuum-tube voltmeter, makes a total of 1,000 megohms. Probe and meter act as a voltage divider of 99-1 ratio, so only 1/100 of the applied voltage appears across the meter terminals.

A-C Voltmeter Circuits. – Now let us look at the a-c voltmeter section of the meter, which is shown in Fig. 43-14.

A separate probe and terminal are used. The a-c input is applied across a voltage divider, *R*21, *R*22 and *R*23, having a total resistance of 1.705 megohms. For the lower ranges, the entire input voltage is applied to the double diode rectifier *V*4 through a blocking capacitor, *C*4. For the 500 and 1000-volt ranges, only a part of the input voltage is applied to the rectifier.

The rectifier circuit is similar in principle to the Simpson meter described previously, except that here a double diode is used instead of copper-oxide rectifiers. The rectified voltage is developed on the negative half-cycle of the input when Capacitor *C*4 discharges through the load resistor, *R*16, *R*17 and *R*18, and the lower half of *V*4. The *R*19 and *C*5 combination is an RC filter to smooth out the ripple in the rectifier output. The filtered and rectified voltage is applied to the same voltage divider that serves the d-c

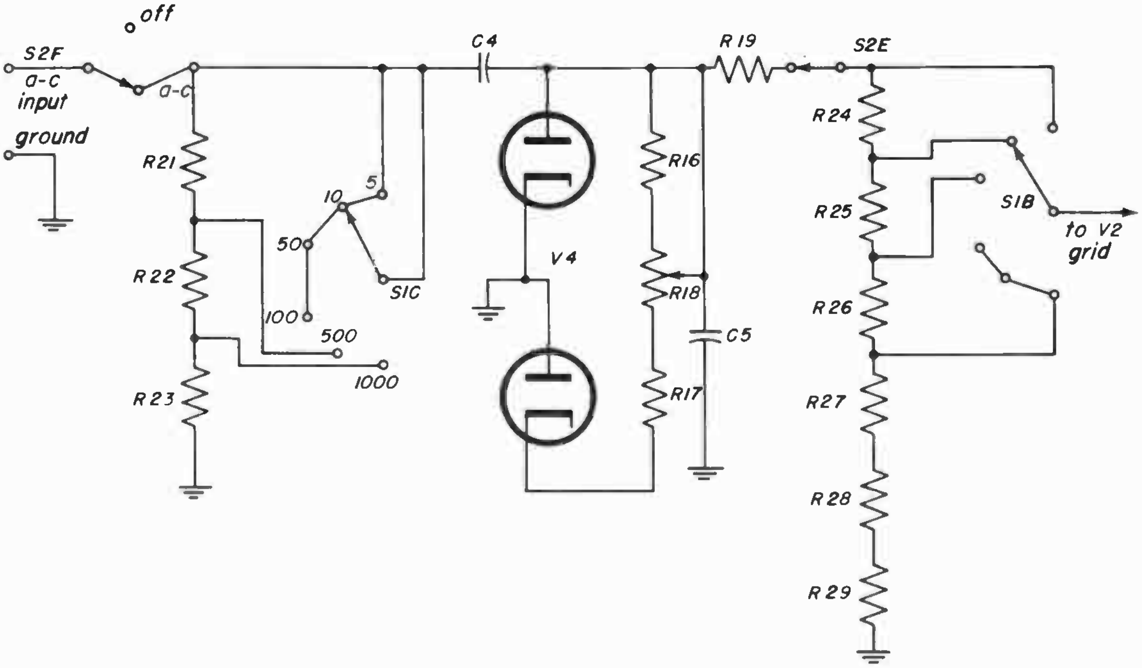

Fig. 43-14

section. Through *S1B*, all or part of this negative d-c voltage is applied to the *V*2 grid. Notice that blocking capacitor *C*4 permits the meter to measure the a-c component of a voltage containing d-c, without the d-c component affecting the reading. Also, the relatively large value of *C*4 reduces the error at low frequencies caused by the variation of the series reactance with frequency.

Measurement of a-c voltages in excess of 100 volts is seldom required, except at power-line frequencies. Therefore the meter is calibrated to give correct readings on the 500 and 1,000-volt ranges at 60 cycles, and on the lower ranges at all audio frequencies. Capacitive effects in the rectifier are substantially prevented by using a double diode rectifier instead of a plate type (copper-oxide) rectifier. Hence the meter response is reasonably constant throughout the audio frequency range. However, it is calibrated to read correctly only for sine-wave voltages, with or without a d-c component. It will not give true readings for other wave shapes.

The sensitivity of the meter for a-c is much less than for d-c, because of the lower value of the a-c input resistance. This input resistance is not the resistance of the 1.705-megohm voltage divider, but the resistance in shunt with two others -- the rectifier load (half of the *R*16, *R*17, *R*18 combination) and the d-c voltage divider. The resultant input resistance is about 200,000 ohms. Thus, the Voltohmyst can be considered a high-sensitivity meter only for d-c.

Note that for both a-c and d-c, the input resistance is the same for all ranges, unlike meters using series multipliers. Therefore the greatest sensitivity is on the lower voltage ranges, varying (for d-c) from 2,000,000 ohms per volt on the 5-volt range, to 10,000 ohms per volt on the 1000-volt range.

This variation of sensitivity is a characteristic of vacuum-tube voltmeters employing voltage dividers. A compensating advantage in the Voltohmyst is that the operation of the bridge circuit makes it impossible to burn out the meter due to overloading. The voltage divider may be overloaded, but this will not develop enough potential across the meter to damage it.

Resistor *R*18, marked "AC BAL." (balancer) in Fig. 43-12, is a semi-permanent adjustment to set the needle to zero when the function switch is on AC and no input voltage is applied.

D-C Ohmmeter Circuits. – Referring back to Fig. 43-12, suppose we trace the ohmmeter circuits. Note that the a-c test lead and input terminal are used for resistance measurement, not the d-c terminal. With the selector switches set for the R x 1 range, we trace from the terminal through *S2F* and *S1D* to a 9.5 ohm resistor *R*35, and through it to the plus terminal of a 3-volt battery (two 1.5 volt cells in series) whose negative terminal is grounded.

Connecting the a-c and ground leads across a resistor to be measured closes the circuit, and a current flows through the 9.5-ohm resistor. The grid-cathode circuit of *V*1 is effectively shunted across this resistor and the battery. The battery voltage, less the drop across the 9.5 ohms, is applied as a positive bias to the *V*1 grid, deflecting the meter.

When a resistance is connected between the leads, the higher the resistance, the less the current through *R*35; therefore the greater the positive bias applied to the *V*1 grid, and the more the meter deflection.

When the range switch is set for a higher range, the battery current flows through additional resistors in the group *R*30 to *R*35. Their values are so chosen that, for example, a 5,000-ohm resistor in the R x 10 circuit will produce the same bias on *V*1 as a 50-ohm resistor in the R x 1 circuit. When using the higher ranges, therefore, we must multiply the meter reading by the multiplying factor of the scale. Thus, in the above example, we would read 50 ohms; multiply it by 100, and get 5,000 ohms, the value we are measuring.

Several precautions should be observed in the use of the ohmmeter section. First, always make sure there is no voltage across the resistance to be measured, or between either of its ends and ground. Such a voltage would cause an entirely false reading. Second, the OHMS ADJ knob should be adjusted before making a resistance measurement, so that the needle comes up to the last line of the resistance scale when the leads are open. The meter is then ready for resistance measurement on any resistance range. However, some error is introduced by the resistance of the leads when very small resistances (under 2 ohms) are to be measured. This may be cancelled by first shorting the leads, and bringing the needle to zero by means of the ZERO ADJ. knob. For all other applications, this adjustment is made before using the meter, but with the leads open, power on, and selector switch on +volts. After a set of resistance measurements has been completed, the meter should be "zeroed" in this way so it will be ready for other use. The two methods do not place the needle at quite the same point on the scale for a given setting of the knob.

Third, note that the meter applies up to 3 volts across the resistor under test. Therefore, there is a possibility of burning out a small resistance such as a low-voltage tube filament. This may be prevented by using the R x 10 scale, or inserting a 10-ohm resistor in series with the filament.

Fourth, in measuring very high resistances (especially on the two highest scales), be very careful to keep your fingers away from the probe tips. Otherwise, leakage of current through your body can cause faulty readings.

The ohmmeter batteries, like all dry cells, have limited life, and must occasionally be checked. If their voltage drops too low, the meter will read incorrectly, especially on low resistances.

The Decibel Scale. – The Voltohmyst has a decibel scale, on which db readings may be read directly.

Although a voltmeter is used to take db measurements, the decibel itself is a logarithmic unit of *power* ratio. The number of decibels gain or loss is defined by the equation:

$$N = 10 \log_{10} \frac{P_2}{P_1}$$

Suppose 0.5 watt of a-c power is fed into an amplifier, and 2 watts is developed across the load. The power ratio is 2/0.5 = 4. Then we would say that the amplifier gain, in db, is

$$N = 10 \log_{10} 4 = 10 \times 0.6 = 6\text{db}$$

Now, since power can be expressed as E^2/R, the decibel equation can be written:

$$N = 10 \log_{10} \frac{E_2^2 R_1}{E_1^2 R_2}$$

$$= 10 \log_{10} \left(\frac{E_2}{E_1}\right)^2 + 10 \log_{10} \frac{R_1}{R_2}$$

$$= 20 \log_{10} \frac{E_2}{E_1} + 10 \log_{10} \frac{R_1}{R_2}$$

Thus the decibel gain depends on the voltage across the input and output as well as their resistances. If the resistances are equal, the second term of the equation becomes zero, and the gain can be measured with a volt-meter calibrated directly in decibels. If the resistances are unequal, we can get the correct reading by adding or subtracting ten times the logarithm of the resistance ratio, to correct for the unequal resistors.

Note that the decibel gain does not state the amount of power at either end of the amplifier, only the ratio of the two values. In order to state the absolute amount of power measured, we must adopt some convenient reference with which to compare each measurement, and calibrate our meter in accorandce with it. Three different reference levels are in use, but the one tending to become standard is one milliwatt in 600 ohms. This is the reference for which the Voltohmyst is calibrated. If the reference is *P*1 in our first decibel equation, the input and output measurements of our amplifier would be:

Input:

$$N = 10 \log_{10} \frac{P_2}{P_1}$$

$$= 10 \log_{10} \frac{0.5}{0.001} = 10 \log_{10} 500$$

$$= 10 \times 2.7 = 27\text{db above reference}$$

Output:

$$N = 10 \log_{10} \frac{P_2}{P_1}$$

$$= 10 \log_{10} \frac{2}{0.001} = 10 \log_{10} 2000$$

$$= 10 \times 3.3 = 33\text{db above reference}$$

The decibel gain is then the difference between these two readings, or 33-27, which is 6 db., as we previously calculated. If we measure the db gain across two equal resistances, we have merely to take the difference between the two readings.

Since a definite amount of power in a specified resistance is adopted as a standard reference, we can state power levels in absolute terms. Thus when we read /27 db across 600 ohms, the power level measured is 27 db above one milliwatt, the reference level. If the power level measured is less than one milliwatt we would read minus db. Absolute db readings therefore have meaning only as referred to the arbitrary reference level.

When measuring the db level across a resistance other than 600 ohms, we can find the correct db level by adding a correction to the reading. This correct reading is obtained by adding or subtracting ten times the logarithm of the resistance ratio, as previously discussed.

The Voltohmyst manual furnishes easy-to-read graphs, on which the correction for resistance ratio may be read directly. If the measurement is made across a resistance greater than 600 ohms, subtract the correction; if it is across less than 600 ohms, add the correction.

The Voltohmyst manual contains complete instructions for making all necessary corrections, including those required for use of the higher range voltage scales.

SIGNAL GENERATORS

43-4. In many servicing techniques, we need a source of signal voltage which can be applied to various parts of the receiver for test purposes. Basically, the devices which furnish this voltage are oscillators which generate sine waves, modulated or unmodulated, of known frequency and amplitude. Signal generators vary in complexity from simple audio oscillators to television sweep generators.

R-f Oscillators. – Basically, a signal generator consists of an oscillator, a means of controlling the frequency and magnitude of the output voltage, and provision for modulating the r-f signals. The oscillator can be of any type, and there are a wide variety of circuits, differing in frequency range, frequency stability, purity of the sine wave produced (harmonics kept to a minimum), complexity of controls, etc. Let us consider an electron-coupled oscillator using a shunt-fed Hartley circuit, shown in Fig. 43-15 with the corresponding front panel arrangement of the instrument.

In this circuit, the screen grid serves as the plate of the oscillator part of the tube, and the feedback voltage is coupled to the tank circuit through the screen-grid capacitor C3. This voltage from the oscillator is fed back to the grid circuit of the tube by inductive coupling in the tank circuit itself.

The plate of the tube serves as the output electrode. The screen grid acts as effective ground for the oscillator signal voltage (the screen grid capacitor is connected to ground), and thus the plate is shielded from the oscillator section of the tube. This arrangement prevents the load impedance or other characteristics of the plate circuit from affecting the stability of the oscillator. Because the plate is kept at a higher voltage than the screen

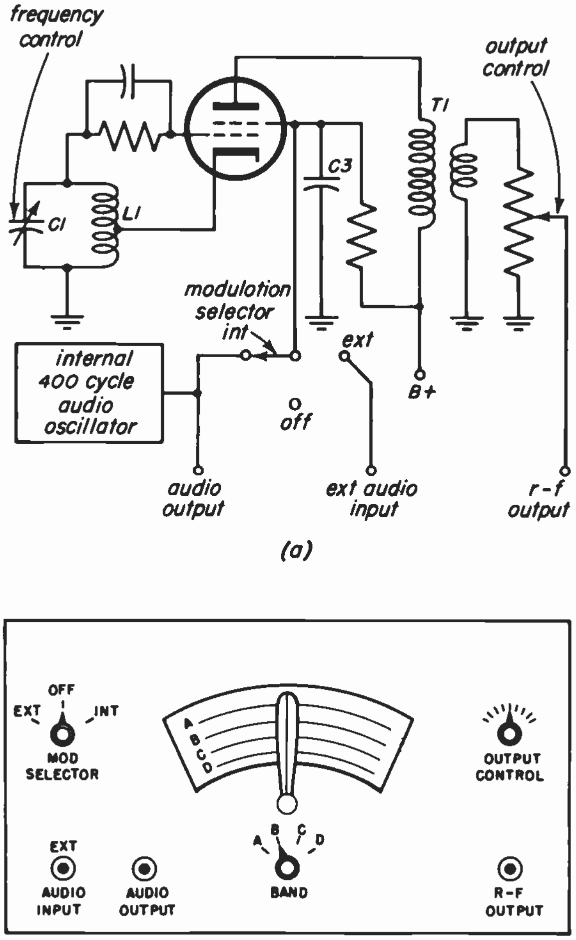

(a)

(b)

Fig. 43-15

grid, many electrons pass through the open mesh of the screen and are drawn to the plate. This electron flow varies instantaneously with the oscillating screen current, and the oscillator energy is delivered to the output plate circuit by means of electron coupling.

The frequency of the output can be varied by varying the setting of C1 (turning the knob and moving the pointer across the calibrated dial on the front panel of the instrument) or by changing the inductance of L1 (switching to different bands on the dial). The output of the unit is varied by changing the setting of the potentiometer (turning the "output control" on the front panel). Note that a step down transformer, T1, is used to provide a proper impedance match for the low impedance output cable.

By adding an audio-frequency voltage from an audio oscillator to the screen grid of the r-f oscillator, we can audio-modulate the r-f output. The audio voltage could be provided by an internal audio oscillator, operating at a fixed frequency (400 cycles is a commonly used modulating frequency) incorporated in the instrument itself, or from an external variable-frequency or fixed-frequency audio oscillator.

Let us see what outputs can be obtained from this type of signal generator. By connecting the output cable to the r-f terminal and turning the MOD switch to OFF, we get an unmodulated sine-wave r-f output the frequency of which depends on the dial setting and the position of the BAND Switch. By turning the MOD switch to INT we obtain 400-cycle amplitude-modulated r-f signals in the output. By turning the MOD switch to EXT and connecting an external audio frequency oscillator to the EXT AUDIO INPUT terminal, we can obtain r-f signals modulated by an external audio oscillator. Finally, by connecting the output cable to the AUDIO OUTPUT terminal we can obtain a 400-cycle audio frequency output.

Audio Oscillators. – Though not used extensively in television servicing, they have many useful applications, such as checking speaker and cabinet rattle at some resonant frequency, tracing the signal through the audio stages, tracing loss of signal fidelity, measuring audio frequencies, and measuring audio-amplifier response. Also, in many signal generators, audio oscillators are used to modulate r-f oscillators. Two types of audio oscillators are common: the resistance-tuned oscillator and the beat-frequency oscillator.

In the resistance-tuned oscillator, the generated frequency is determined by a resistance-capacitance network which provides positive feedback coupling between the output and input of a resistance-coupled amplifier. It can be made to generate a wide range of frequencies, from as low as 2 cycles to as high as 200,000 cycles. A variable air capacitor can be used to give a 10:1 frequency ratio in a single range, and by means of a tapswitch to cut in different resistors in the frequency determining circuit, several ranges can be provided. The output waveshape is very nearly a true sine wave (harmonic content is only 1%), frequency stability is excellent, and the output amplitude is nearly constant over a wide range of frequencies.

The beat frequency audio oscillator is an instrument in which two r-f oscillators are employed. The outputs are applied to a nonlinear impedance such as a detector, and the sum and difference frequencies which are generated appear in the output. The difference frequency is a heterodyne or "beat" frequency, and is in the audio range if the two r-f oscillator frequencies are correctly chosen. Thus, if one of the oscillators operates at 338,000 cycles, and the other at 338,100 cycles, the audio output will be the difference of the two frequencies or 100 cycles. With a circuit using the heterodyne principle it is possible to cover all audio frequencies with a single tuning control in one continuous stepless range. There is very little change in output voltage over the entire range, and the waveshape is a good sine wave (less than 3% distortion over the entire range).

For checking the audio section of television receivers, the output of the audio oscillator is applied to the various stages of the audio amplifier, as shown in Fig. 43-16. The output signal then can be detected, audibly through the loudspeaker, or visually by a scope or vacuum-tube voltmeter. The audio signal can be applied to the grid of each stage in the audio section, working from the power output stage toward the antenna, until a section is reached where no signal appears. The trouble is thus localized to that stage.

By applying a constant level signal to the high end of the volume control, then varying the setting of the control, it is possible to check the operation of the control.

Audio oscillators are easily connected to r-f signal generators for modulation of the r-f signals, since the input connection usually is marked AUDIO INPUT or EXT MOD.

R-F Signal Generators. — A wide range of signal generators that produce oscillations in the radio frequency range are available. They vary in function according to the frequency range they cover. An r-f signal generator with a range of 150 kc to 40 mc can cover all the i-f, r-f, and local oscillator frequencies encountered in a broadcast or "all wave" receiver. To include F-M receivers, the frequency range must extend from 4 mc to 108 mc, and for VHF television receivers up to about 240 mc. These higher frequencies are obtained by using harmonics of the fundamental frequencies generated in the oscillator of the instrument.

Need for Modulation. — Since an r-f signal cannot be observed by such devices as headphones, loudspeakers or output meters, it is desirable to modulate the r-f output of the signal generator.

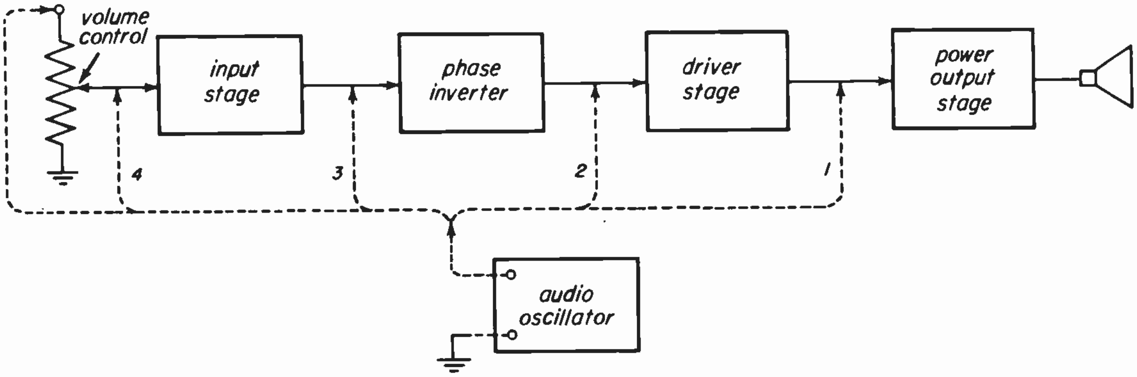

Fig. 43-16

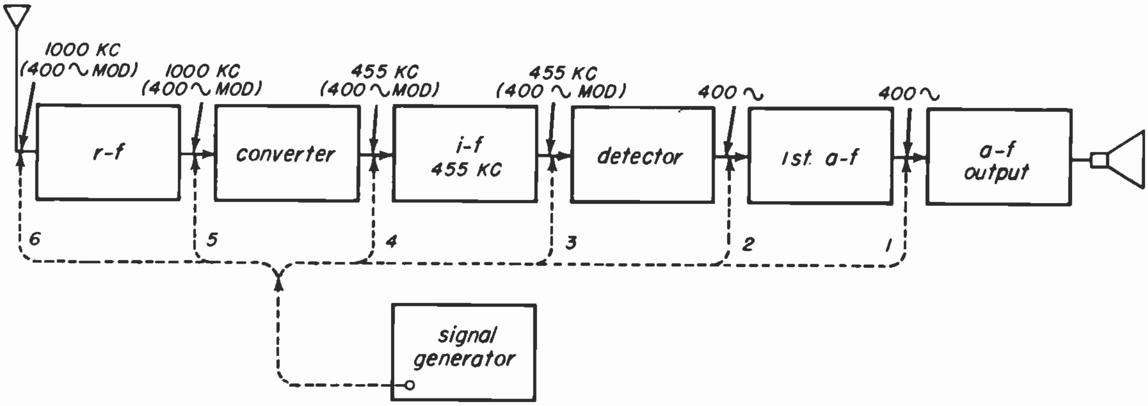

Fig. 43-17

This is usually provided for in the signal generator itself, by one or more audio frequencies or a variable-frequency audio oscillator. The modulated r-f signal, after passing through a detector, can then be observed.

Calibration. – Any signal generator can be calibrated by comparison with an accurate standard, such as the signals transmitted by the National Bureau of Standards radio station WWV or by calibrated equipment in the shop. Since additional equipment may not always be available when needed, some signal generators have a calibrating device incorporated in the instrument in the form of a carefully calibrated crystal used as a part of an oscillator circuit. The harmonics of the crystal-controlled frequencies also can be used in this type of instrument, making available standards covering a wide frequency range.

Applications. – The r-f signal generator is an extremely versatile instrument. A relatively simple type, without a calibrating crystal, or frequency modulation, but with provisions for 400-cycle amplitude modulation of r-f bands ranging up to about 130 mc, can be used for such tests and measurements as: (1) determining the constants of the antenna and transmission line; (2) checking tracking of the local oscillator in superheterodyne circuits; (3) r-f and i-f alignment; (4) sensitivity measurement and receiver selectivity; (5) checking receiver image-rejection ratios; (6) measuring signal-to-noise ratios; (7) checking AVC characteristics of a receiver; (8) making stage-gain measurements; (9) making audio fidelity and distortion measurements; and (10) signal tracing through all stages of a receiver.

To show how the signal generator is used in practice, let us use the instrument in a signal-tracing check on the receiver shown in Fig. 43-17. This simple example illustrates the basic principles involved in signal tracing. First the instrument is turned on and allowed to warm up until the circuits become stable. At least five to ten minutes is desirable. With the signal generator set for a 400-cycle output and the output cable connected to the audio output terminal, we apply the output signal to the grid of the audio output tube. If this stage of the receiver is normal the 400-cycle signal should be heard in the loudspeaker of the set. Next, with the signal generator set as before, we apply the signal to the first audio stage, and if there is no fault in this stage the 400-cycle note again will be heard at the loudspeaker.

Now the r-f oscillator of the signal generator is tuned to a frequency of 455 kc and the modulation selector switch turned to the INT MOD position, producing an amplitude modulated r-f signal; 455 kc modulated at 400 cycles. This corresponds to the receiver's i-f of 455 kc. The r-f output cable is connected and this audio modulated r-f signal is applied to the grid of the detector tube. If the circuit is working properly, the detector should remove the r-f and permit the 400-

cycle audio voltage to pass on to the loudspeaker.

With these same settings on the signal generator, the audio-modulated r-f signal next is applied to the grid of the i-f tube and then the input side of the i-f transformer. Here again, if there are no faults in the circuit a 400-cycle note is heard at the loudspeaker.

Before proceeding to the next stage the signal generator must be readjusted. Now it must take the place of a broadcast station, so we tune the instrument to a broadcast frequency, say 1000 kc and, as before, modulate this r-f signal with a 400-cycle audio signal. This 400-cycle modulated 1,000 kc signal then is applied to the grid of the converter tube, and if nothing is wrong with the circuit, the 400 cycle audio note is heard again.

Finally, with the signal generator set as before, the 400-cycle modulated 1,000 kc signal is applied to the antenna terminal of the receiver and the audio note should be heard if the circuit is functioning.

If at any point in this procedure the audio note is not heard, the trouble is in the stage where the audible signal failed to come through. Then after checking the tube in that stage, voltage and resistance measurements can be made to trace down the trouble.

Note that the signal generator must be adjusted so that its frequency is correct for each circuit to be checked.

Sweep Generators. – A signal generator that has provisions for frequency modulation of the r-f output is called a *sweep generator*, because the instantaneous frequency continuously varies as it sweeps through a range of frequencies determined by the amount of frequency modulation. The r-f sweep generator can be used for visual alignment of receivers, and frequency response measurements. The amount of sweep width, which is equal to the band of frequencies produced in the FM output, must be a little wider than the bandwidth of the circuits being checked. For an AM Broadcast Band receiver the sweep width required is about 20 or 30 kc; for an FM Broadcast Band receiver the sweep width must be about 1 or 2 mc; for the picture stages in a TV receiver about 10 mc sweep width is needed.

Fig. 43-18

Simpson Model 415 Signal Generator. – A relatively simple and sturdy instrument providing amplitude modulation at a single frequency is the Simpson Model 415 Signal Generator shown in Fig. 43-18. This unit covers the frequency range between 75 kc and 65 mc on fundamental frequencies, and from 62 mc to 130 mc on second harmonics. Provision is made for 400-cycle modulation of all these bands as well as a separate 400-cycle output. The r-f output is controlled by means of a step attenuator and can be varied from a few microvolts to about one volt. The audio signal is controlled by a separate control, which varies the signal available at the output jack from zero to about 9 volts, and at the same time controls the percentage of modulation of the r-f oscillator. An external audio signal also can be used for modulation if desired.

The circuit diagram of this instrument is shown in Fig. 43-19.

The functions of the various tubes are as follows: *V1* is a full wave rectifier which supplies the other tubes with their screen and plate voltages; *V2* is the r-f oscillator, the output of which can be

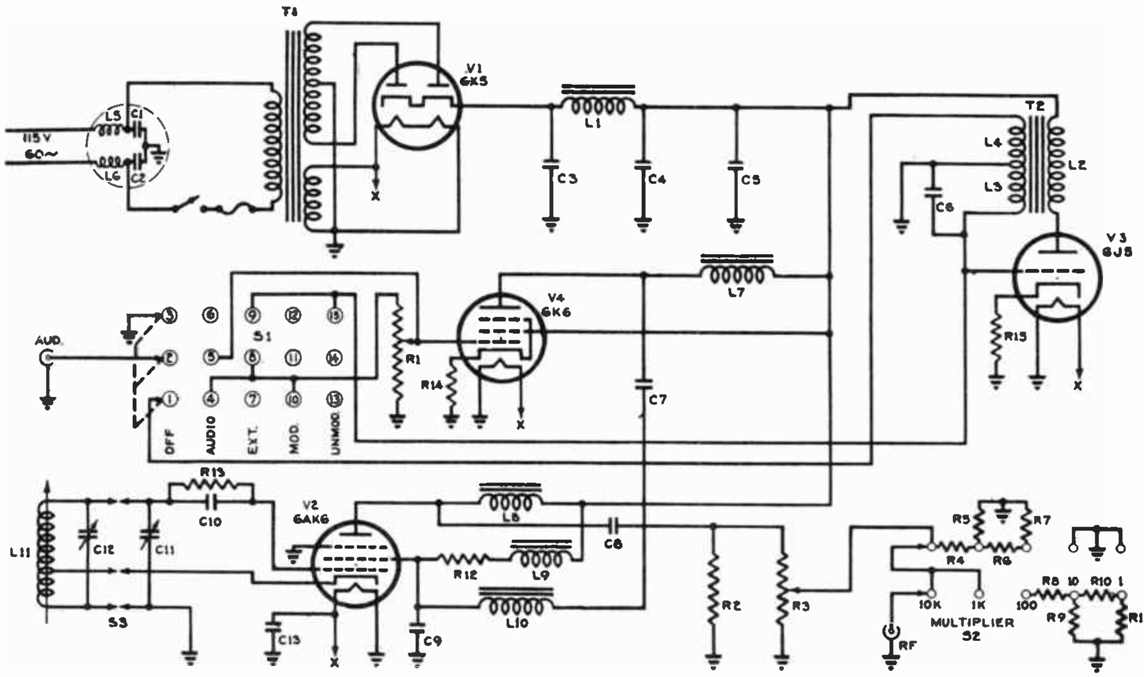

R1—10,000 ohm Pot
R3—5,000 ohm Pot
R2, R5, R7, R9—120 ohms
R4, R6, R8, R10, R14, R15—1000 ohms
R11—110 ohms
R12, R13—20,000 ohms
C1, C2—.05 MF
C3, C4—20 MF
C5—.25 MF

C6, C7—.5 MF
C8—.002 MF
C9—.001 MF
C10—.0001 MF
C11—Tuning Condenser
C12—Trimmer
C13—.008 MF

T1—Power Transformer
T2—Feed-back Transformer
L1, L7—Filter Choke
L5, L6—Dual 250 MMH RF Choke
L8—3 MH
L9—1.5 MH
L10—6.5 MH

RANGES
A—75-200 KC
B—200-600 KC
C—550-1800 KC
D—1.7-5.2 MC
E—5-16.5 MC
G—62-130 MC
F—16-32 MC
G—31-65 MC

Fig. 43-19

amplitude modulated by the output of *V3*, the audio oscillator; *V4* is an audio amplifier for externally applied audio signals.

With the signal selector switch (on the left side of the panel shown on Fig. 43-18) in the AUD position, the jack on the lower left corner of the panel becomes the source of a 400-cycle signal which can be used for testing purposes or for modulating another signal generator. When the signal selector switch is in the EXT position, this same jack is used as the input point for an external modulation oscillator. The jack at the lower right is the r-f output jack, through which the modulated or unmodulated r-f signals are obtained for checking various circuits. The r-f output should not be connected directly to circuits carrying d-c, as there is no isolating capacitor in the output lead.

Hickock Model 277X Universal Crystal Controlled Signal Generator. – An example of a typical multipurpose signal generator is the Hickock Model 277X Universal Crystal Controlled Signal Generator illustrated in Fig. 43-20.

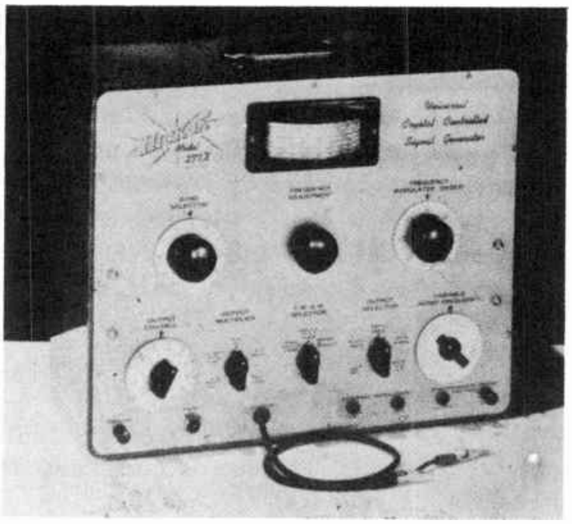

Fig. 43-20

Outputs obtainable from this unit include:

1. Unmodulated r-f, continuously variable from 100 kc to 110 mc.

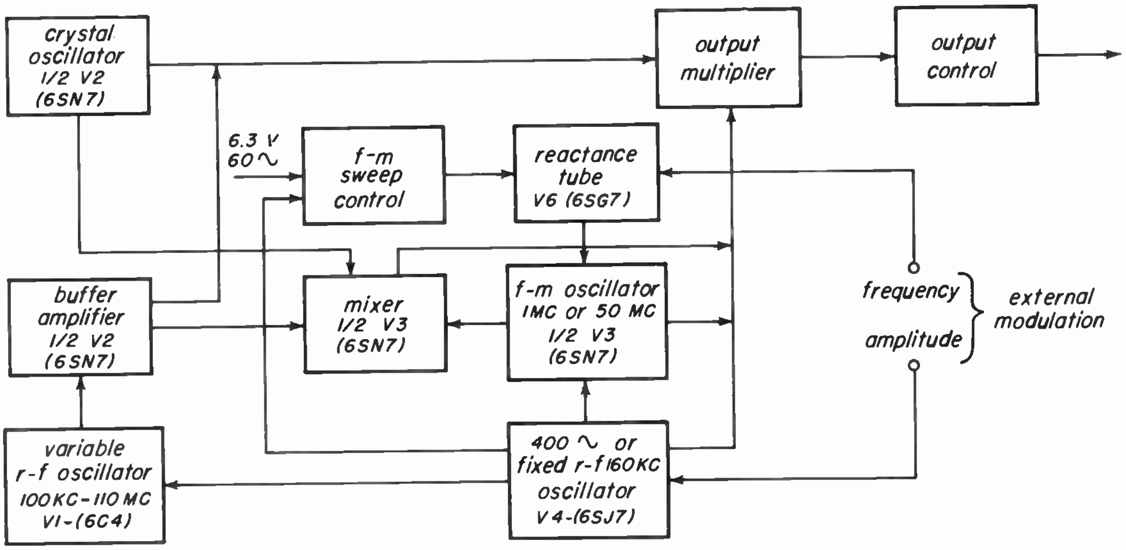

Fig. 43-21

2. Amplitude-modulated r-f, at either 400 cycles, or from an external source.
3. Frequency-modulated r-f
   (a) 100 kc to 110 mc center frequency range, 0-30 kc sweep bandwidth, 60 cycle rate.
   (b) 150 kc to 160 mc range, 0-150 kc sweep, 400 cycle rate.
   (c) 450 kc to 160 mc range, 0-450 kc sweep, 60 cycle rate.
   (d) 50 mc center frequency, 0-15 kc sweep, rate determined by external modulating voltage.
4. Audio frequency, fixed at 400 cycles.
5. Audio frequency, continuously variable over 0-15 kc range.
6. Frequency-modulated audio, 0-150 kc sweep, 60 cycle rate.
7. Crystal control r-f, 100 kc or 1,000 kc, unmodulated or amplitude modulated at 400 cycles.

A block diagram of the instrument is shown in Fig. 43-21. The instrument contains four separate oscillators, as follows: (1) the main variable r-f oscillator, *V*1, whose frequency is variable from 100kc to 110 mc; (2) a fixed frequency oscillator *V*3, operating at either 1 mc or 50 mc; (3) a fixed frequency oscillator *V*4, oscillating at either 400 cycles or 160 kc; and (4) a crystal controlled oscillator *V*2, whose output can be set at either 100 kc or 1,000 kc.

The output of any one of these oscillators can be obtained from the output terminals. The real flexibility of the instruments, however, lies in the many ways in which the several outputs can be combined to obtain beat frequency outputs, modulated or unmodulated. The 400-cycle output of V4 can be used to modulate *V*3, either AM or FM. The variable audio frequencies are obtained as the difference frequency between 160kc from *V*4 and the difference between *V*3 and *V*1. For modulated r-f outputs, *V*3 is modulated either by 400 cycles from *V*4 or by 60 cycles from the heater power supply, and this modulated r-f combined with the variable r-f from *V*1 to obtain a modulated difference frequency. Using the principles outlined above many other combinations are possible.

The binding post at the extreme left of the front panel (at the bottom) is for connecting the ground to the signal generator. Next to it on the right is a pilot light, and to the right of that is an attached shielded output cable, by means of which the output signal is fed to the various circuits being tested. The next two jacks are for connecting external modulation sources, the one on the left for amplitude modulation and the other for frequency modulation. The last two output connections provide a synchronized sweep voltage for use with a cathode-ray oscilloscope. One is a ground binding post, and the other is a jack from which is fed a 60 cycle voltage from the power supply of the instrument to supply the horizontal sweep of the oscilloscope.

Crystal Calibrators. – The signal generator is a useful servicing tool, but its usefulness would be extremely limited if we had no means of checking the accuracy of its calibration. For this purpose we use a device known as a crystal calibrator. Basically, this instrument is an oscillator whose frequency output is controlled by the action of a crystal. This action depends upon a property of the crystal known as the piezoelectric effect. Certain crystals (quartz, tourmaline, and Rochelle salt), when placed under a mechanical strain, develop an electrical difference of potential across opposite faces of the crystal; and conversely, when a voltage is applied across the crystal, the crystal will expand or contract. An alternating voltage will cause the crystal to vibrate.

The crystal has a natural frequency of vibration, determined by its thickness and the way in which it has been cut. If the frequency of the applied voltage is the same as that of the crystal the amplitude of the vibration will be very large, just like the current in a series-resonant circuit to which a voltage of its resonant frequency has been applied. At constant temperature, a high-quality crystal will maintain an oscillation frequency varying less than one part in a million, thus this type of oscillator is very useful for calibrating signal generators.

A typical crystal oscillator circuit is shown in Fig. 43-22. It is the circuit used in the Hickock Model 277X Crystal-Controlled Oscillator, whose general functions we have discussed previously. Note that the circuit is similar to a tuned-grid-tuned-plate oscillator, in which feedback coupling is effected through the plate-to-grid interelectrode capacitance of the tube. A special crystal is used, cut so that it will operate at two frequencies: 100 kc and 1,000 kc. Inductance L1 in the plate circuit is tapped so that the circuit can be tuned to resonance at either of these two frequencies.

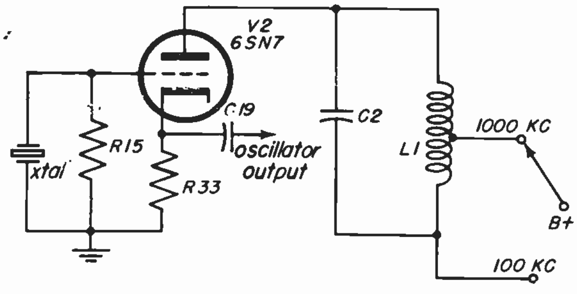

Fig. 43-22

In addition to oscillating at the fundamental frequency for which it has been cut, a crystal has the property of being rich in harmonics of frequencies that are multiples of the fundamental. The second, third, and fourth harmonic (two, three, and four times the fundamental frequency) may be quite strong, and useful energy for calibration purposes can be obtained up to the thirtieth harmonic. This is accomplished by tuning the plate circuit to the harmonic frequency instead of the fundamental. The harmonic frequency will appear much amplified in the output. Note that in the circuit shown, the output is taken from the cathode circuit. If it were taken from the plate circuit, the selective effect of the tuned plate circuit would greatly attenuate the energy output of the harmonic frequencies.

In some signal generators, the crystal calibrator oscillator is incorporated in the instrument, as in the Hickock Model 277X. Many signal generators, however, do not have built-in calibrators and an external instrument must be used. A signal from the crystal-controlled oscillator is beat with that of the signal generator, and by a pair of earphones or a loudspeaker, a zero beat can easily be detected. Thus the dial calibrations of the signal generator can be checked. Another important use of crystal oscillators is that of functioning as marker generators for use with sweep generators in television alighment work. These functions and others are combined in an instrument designed especially for television use, called the Television Calibrator.

RCA Type WR-39B Television Calibrator. – The RCA type WR-39B Television Calibrator, shown in Fig. 43-23, is a generator of crystal-calibrated marker frequencies. It is designed primarily to be used with a sweep generator and an oscilloscope to align television receivers.

Fig. 43-23

This multipurpose unit is a crystal calibrated marker generator with dual markers for all television frequencies, a linearity-pattern generator for making linearity adjustments, a 12-channel miniature television re-broadcast transmitter, a heterodyne frequency meter including an amplifier and speaker, and a television and f-m signal generator operating on fundamental frequencies in all bands.

It includes in the one instrument a variable frequency oscillator, three crystals at 4.5 mc, 2.5 mc and .25 mc, and an audio amplifier and speaker. The variable frequency oscillator has a range from 19 to 110 mc in four bands, and from 170 mc to 240 mc in two bands. The two crystal-controlled oscillators operating at 2.5 mc and .25 mc are used to calibrate the variable frequency oscillator.

This is done by beating the crystal oscillator against the variable frequency oscillator and listening for zero beat from the internal loudspeaker. The beat marks can be heard every 2.5 mc or .25 mc, depending on which crystal is in use. The calibrated output can then be used as an accurate marker for visual response curves obtained with a sweep generator.

The 4.5 mc output can be used for alignment of intercarrier sound receivers.

In addition to its function as a marker generator, the instrument can be used as a heterodyne frequency meter to identify unknown frequencies, and the loudspeaker or a suitable oscilloscope can be used as the indicator. The variable-frequency oscillator, when tuned to any television channel and modulated with the 0.25 mc crystal oscillator, will produce vertical bars on the picture tube raster; or when modulated by an external audio oscillator will generate horizontal bars on the picture tube raster for linearity adjustments in the absence of a test pattern. Another useful function of this instrument is that it can be modulated by the video signal from a television set tuned to any channel, and will retransmit the signal on any of the 12 channels to other receivers under test on the service bench. In this manner it can be used to check video reception on all 12 channels, using the signal from a normally operating set.

At the lower left on the front panel is a ground binding post, and just to the right of it is an r-f input terminal to which an external r-f signal can be applied when the instrument is used as a heterodyne frequency meter. The next jack is provided for the introduction of an external modulating voltage of any frequency when modulation of the marker output is desired. The variable frequency r-f oscillator output appears at the next jack, and a set of phones can be plugged into the following jack to supplement the front panel speaker when beat notes of very low volume must be heard. At the far lower right is a pilot light to indicate that the instrument is on.

SWEEP GENERATORS

43-5. Probably the most useful instrument available to the serviceman for the alignment and general servicing of television and FM receivers is the sweep generator. Used with a suitable oscilloscope and an accurately calibrated signal generator, the television sweep generator can provide a visual indication of the frequency response of individual television circuits, with critical frequencies accurately marked. By this means it is possible to perform with speed and accuracy such operations as r-f alignment, picture i-f alignment, adjustment of trap circuits, adjustment of stagger-tuned systems, sound discriminator and sound channel alignment, oscillator alignment, and video amplifier tests. Other applications include FM receiver alignment, adjusting the terminating impedance of a transmission line and measuring the impedance frequency characteristic of any network.

Basically, a sweep generator is a signal generator in which the frequency is varied or swept over a band of frequencies at a rapid rate, usually 60 cycles or more per second. Its primary purpose is to furnish a graph of response versus frequency for some part of the receiver on the cathode-ray oscilloscope. It causes the horizontal displacement of the scope spot to be proportional to the instantaneous value of a variable frequency and the vertical displacement of the scope spot to the response of the circuit under test at each frequency period.

Modern sweep generators furnish a frequency-modulated signal to cover each of the thirteen standard television channels, the picture i-f and sound i-f channels and the video channels. While the standard bandwidth of a television channel is 6 mc, for service use the sweep band of the sweep generator must be greater than this, and usually is 10 mc or more.

Types of Sweep Generators. – There are two basic methods of frequency-modulating a signal generator frequency to obtain the desired sweep signals. This can be accomplished by mechanical or electronic means. In the mechanical system the frequency may be varied by means of a motor-driven variable capacitor in the oscillator circuit, or by a vibrator mechanism similar to the voice coil and magnet arrangement in a loud speaker, which is used to alter one or more frequency controlling elements in the oscillator circuit.

The electronic system uses a reactance-tube frequency-control circuit, similar to that used for automatic frequency-control in some receiver circuits. A frequency-modulated oscillator, using either of these methods, can be used with a fixed-frequency oscillator to produce a frequency-modulated beat of a lower frequency at the output of a mixer tube.

RCA Type WR-59A Television Sweep Generator. – An instrument which obtains frequency-modulated sweep signals mechanically is the RCA Type WR-59A Television Sweep Generator shown in Fig. 43-24. It furnishes a frequency-modulated signal to cover each of the 13 standard television channels, the picture i-f and sound i-f channels, and a video sweep frequency. Additional channels provide sweep signals for such ranges as the pre-war picture i-f channel, the F-M receiver i-f channel, and a spare covering the 25 mc to 40 mc range. The circuit diagram of the instrument is shown in Fig. 43-25.

Fig. 43-24

A precision-type vibrating capacitor is used to frequency-modulate the r-f signal. One set of capacitor plates is attached to a coil which vibrates in a magnetic field in accordance with the current through the coil. The principle is the same as that of the loudspeaker. As the vibrating capacitor plates move with respect to the fixed plates, the capacitance value is varied at a rate determined by the coil current. The circuit simplicity and rugged construction result in a signal free from spurious responses and other frequency components often found in harmonic generators and beat frequency oscillators.

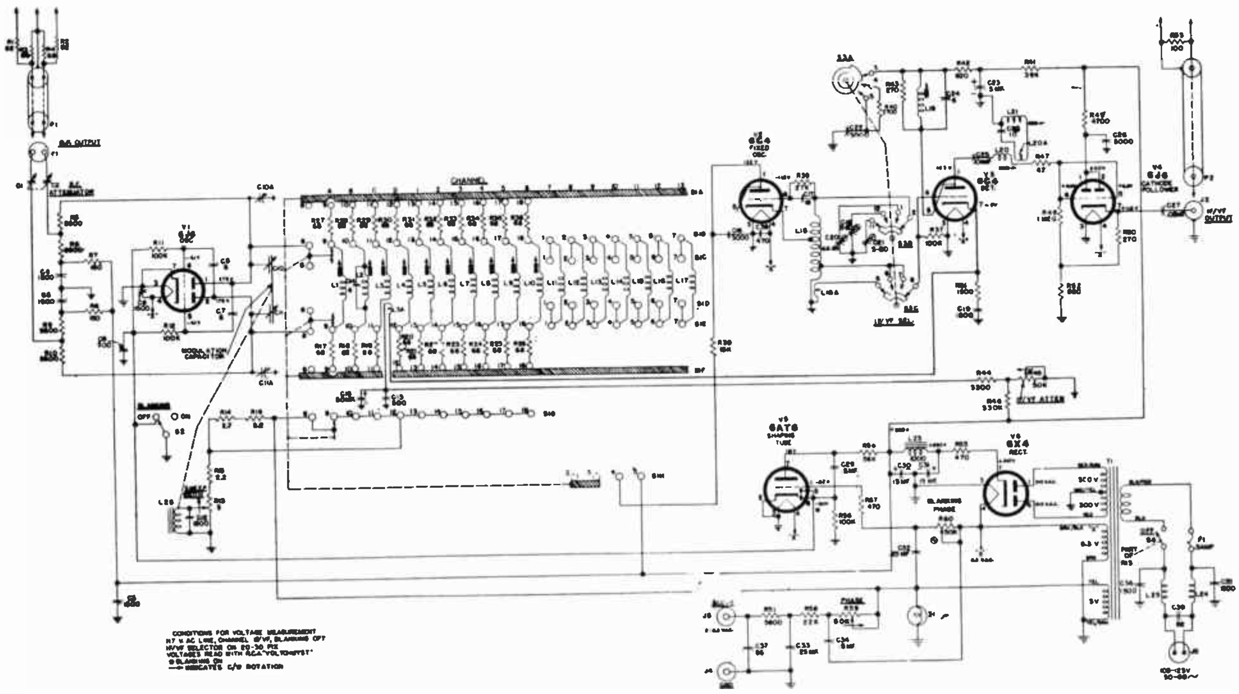

Fig. 43-25

An additional feature of the instrument is a blanking circuit which produces a zero-reference line on the cathode-ray oscilloscope. This enables the point of zero signal from the sweep generator to be determined. The baseline is particularly useful in aligning F-M discriminators and in checking the exact slope of a frequency response curve.

Looking at the front panel of the instrument shown in Fig. 43-24, at the lower left is a jack from which the i-f and video frequencies are obtained through a special output cable. If the oscilloscope being used in conjunction with the sweep generator has no phase control for line frequency sweep, the next two terminals (SCOPE and GND) on the generator are connected to the horizontal input of the scope. The phase control is used to superimpose the forward and return trace so that they form a single response curve on the scope screen. The frequency-modulated r-f output is available on the jack on the far right, and the r-f cable should be terminated in 300 ohms, balanced to ground, or 150 ohms for either side to ground. A d-c blocking capacitor is necessary in the output lead when the lead is connected across a point of d-c potential to prevent damage to the equipment.

When the IF/VF selector switch is in the VIDEO 0-10 position, in addition to the video sweep signal of 0-10 mc, an absorption marker, tuned to 3 mc is included in the circuit. This absorption marker is essentially a sharply tuned circuit, shunted across the circuit under test so that the signal at the marker frequency is shorted out, producing a dip or notch in the response curve on the scope. This provides a convenient check point when analyzing video-amplifier circuits.

Kay Electric Mega-Sweep Jr. Sweep Generator. – A rather special electronic method is used in the Kay Electric Mega-Sweep Jr. Sweep Generator (shown in Fig. 43-26) to obtain sweep signals. To obtain the r-f signals, the instrument makes use of the beat frequency principle with two ultra-high frequency klystron oscillators that operate in the microwave region at frequencies of the order of 10,000 mc. Since it is the difference frequency between the frequency outputs of the individual microwave oscillators that determines the beat frequency output, the

Fig. 43-26

absolute frequency of the klystron oscillators is not important. What is important is that we can obtain a beat frequency output covering the entire frequency spectrum from 400 kc to 500 mc in one band; and by an additional adjustment, to increase the output frequency to cover ranges up to 1,000 mc. Thus this instrument can cover all the frequencies encountered in present television receivers operating in the VHF channels, and in addition, those in the UHF (ultra-high frequency) channels which soon will be of great importance in home receivers.

In this instrument, one oscillator operates at a fixed frequency, while the other is tunable and frequency modulated or swept. The variable frequency oscillator is swept by a sawtooth voltage generated in the instrument, and this sawtooth voltage also is available at the output posts for deflection or synchronization of the cathode-ray oscilloscope. The sweep amplitude can be varied up to 30 mc. Controls are provided for setting each klystron oscillator to maximum output as indicated by the panel meter, for setting the center frequency of the variable oscillator to the desired point, and for setting the frequency deviation and sweep rate by adjusting the sawtooth voltage amplitude and frequency. A block diagram of the instrument is shown in Fig. 43-27.

The outputs of the two oscillators are fed into wave guides, where they are mixed and detected by a crystal, and the difference frequencies applied to an output connector on the instrument panel. An absorption-type microwave frequency meter indicates the output frequency by measuring the frequency of each klystron oscillator. A variable, broad-band microwave attenuator adjusts the output level.

Two output signals are available at

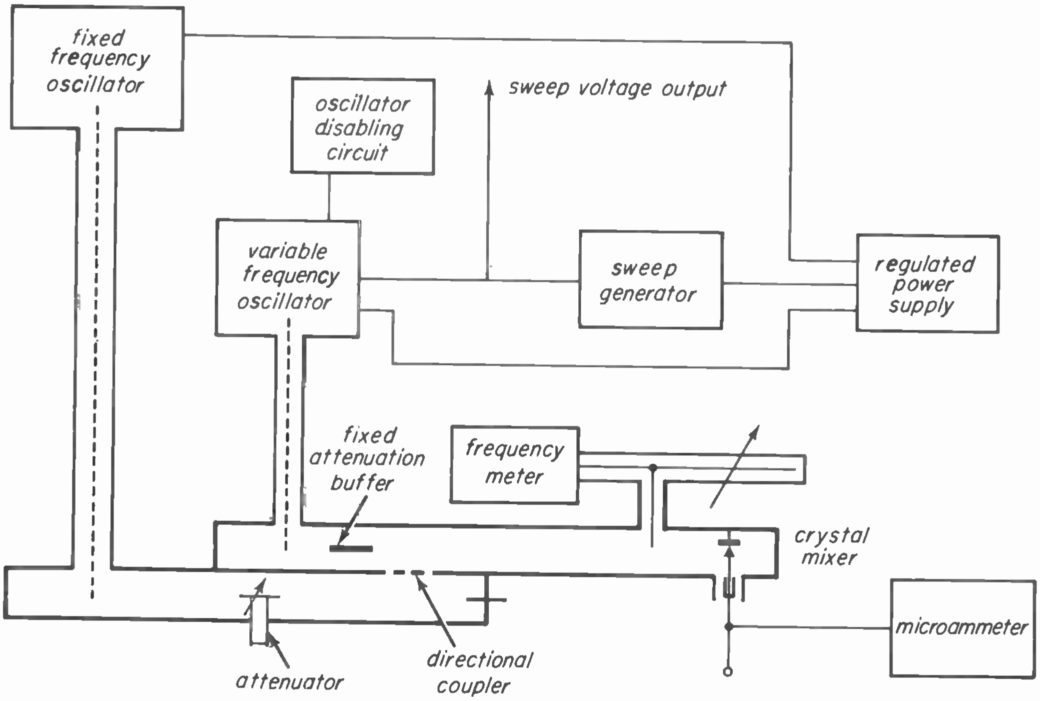

Fig. 43-27

the two jacks at the lower left on the instrument panel. The HIGH OUTPUT signal is furnished at an impedance level of about 50 ohms and a signal level of about 0.05V to 0.1V maximum over the entire frequency band. The LOW OUTPUT is furnished at a 300-ohm impedance level (at the terminals of a standard twin-lead cable) and a signal level of about 2,000 microvolts.

There are many other types of sweep generators on the market. Some do not have internal marker generators, and others have not only built-in variable-frequency marker generators, but also provisions for plugging in crystals, so that the serviceman may select the ones required for testing. These units vary in complexity and quality, but essentially they have the same function; that of providing a frequency-response curve to facilitate rapid circuit checking.

The sweep generator is a key unit in the new servicing technique that has greatly simplified and speeded up the adjustment of complex electronic equipment by a visual response indication of the operating characteristics of the various circuits. The sweep generator, with the cathode-ray oscilloscope, the crystal calibrated marker generator, and the vacuum-tube voltmeter, form a test bench combination that can meet every type of television service need.

ADDITIONAL TEST EQUIPMENT

43-6. We have discussed several types of measuring devices necessary for proper television servicing. As has been mentioned before, the only instruments that are really essential are the multimeter, a vacuum-tube voltmeter, a cathode-ray oscilloscope, a sweep generator and a calibrator. There are a few other testing units worth mentioning.

The Grid-Dip Meter. – A handy instrument for pretuning coils and locating television interference sources is the *grid-dip meter* (so called because the meter is in the grid circuit of the oscillator.

Basically, the instrument is a low-power oscillator, incorporating a meter which indicates rectified grid current. When checking the resonant frequency of a coil-capacitor combination, for example, the tank circuit of the instrument is coupled to the circuit under test either directly or by a link. The oscillator frequency then is adjusted until a sharp dip in grid current is indicated on the meter. The frequency of the oscillator (which can be indicated by the calibration on the variable capacitor dial) is then equal to the resonant frequency of the circuit being tested.

The circuit diagram of a simple grid-dip meter is shown in Fig. 43-28. By using a plug-in coil arrangement for L, a fairly wide range of frequencies can be covered.

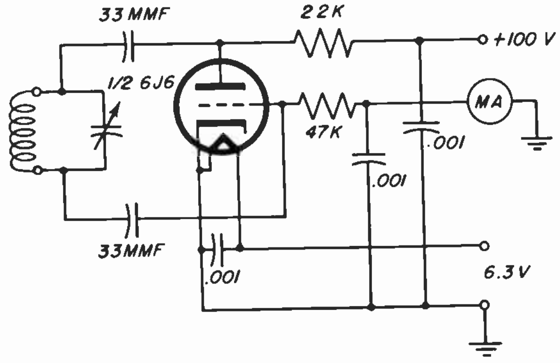

Fig. 43-28

The grid-dip meter also can be used as an unshielded signal generator for preliminary rough alignment work, if its frequency range is high enough.

It is also possible to use the grid-dip meter, in conjunction with a calibrated capacitor, to measure capacitance. In this application, a coil is connected across the calibrated capacitor and the resonant frequency of the circuit is checked with the grid-dip meter. With the meter set at this frequency, the unknown capacitance is connected in parallel with the calibrated capacitance. The latter is decreased until the circuit again resonates at the frequency set on the grid-dip meter. The amount by which the calibrated capacitance has decreased is equal to the capacitance of the unknown capacitor.

Capacitance Tester. – Another method of checking capacitance values is by means of a simple Wheatstone bridge arrangement, as shown in Fig. 43-29. Here a calibrated variable Capacitor Co and two resistors R1 and R2 are used.

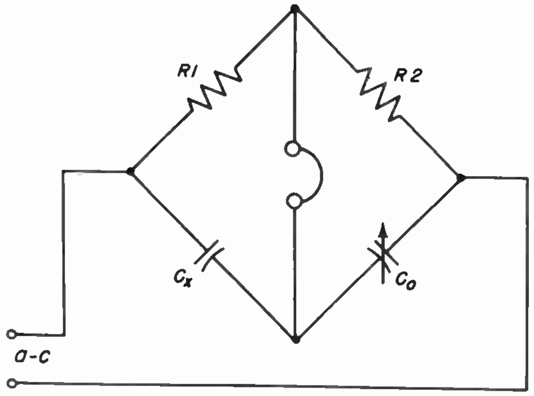

Fig. 43-29

When an a-c voltage is applied to the circuit shown, and the calibrated capacitor adjusted until no sound is heard in the phones, the unknown capacitor Cx is equal to (R2/R1)Co.

Capacitance testers that can measure power factor and leakage resistance are also available. Some types operate so that measurements can be made without any applied d-c voltage, and others permit measurements to be made with rated d-c voltage applied.

Tube Testers. – In general, a tube-testing device can only indicate a deviation from the standard for a given tube. However, operating conditions may vary within wide limits, and it is therefore impossible to evaluate tubes in terms of performance capabilities for all applications. Actual operating test in a receiver will give the best possible indication of a tube's worth.

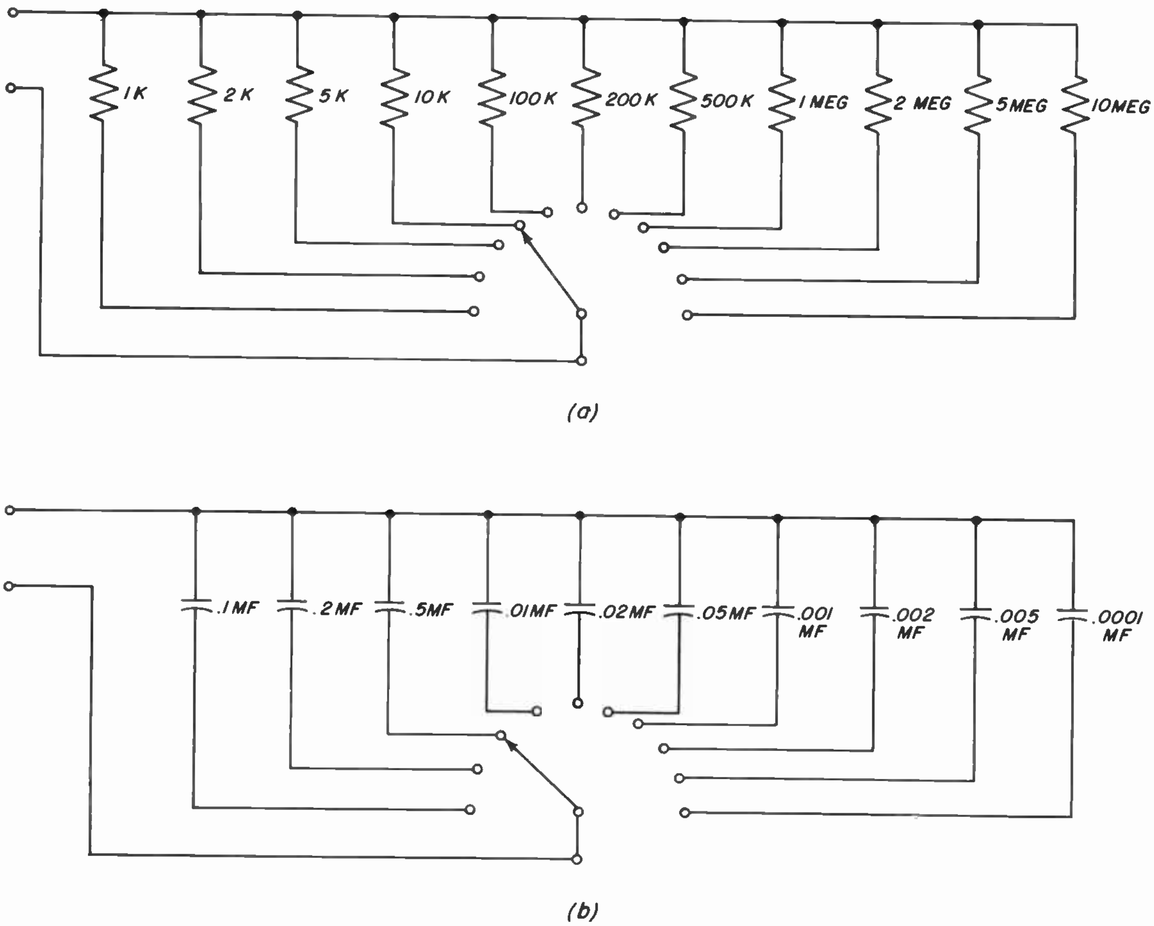

Fig. 43-30

Bench Aids. – Two handy bench aids which can be used for a variety of useful purposes in servicing work are capacitance and resistance boxes.

These units are easily constructed of inexpensive parts. The arrangements indicated in Fig. 43-30 *a* and *b* are only two of many possibilities. Other resistance and capacitor values can readily be used.

These resistor and capacitor boxes can be used when a component in a receiver is suspected of being faulty, or of the incorrect value. One end of the suspected resistor or capacitor is disconnected, and the corresponding unit in the box is connected to the circuit. Since great accuracy is not needed because the boxes are not measuring devices, resistors of ± 5% are adequate for almost all such substitution applications. For the capacitors, mica, ceramic, or even paper units of reasonably good quality will suffice.

Conclusion. – A wide range of television test equipment has been discussed in this lesson. The subject has by no means been exhausted, for many other types of equipment can simplify television testing and trouble-shooting procedures. Often, valuable devices are devised by servicemen themselves as they encounter day-to-day problems. Many of these units are described in the various technical publications which cover the servicing field.

Additional details on operation, maintenance, and further applications of the instruments discussed can be found in the manuals furnished by the manufacturers of the equipment. The proper manual should be studied before any piece of equipment is used.

◆

NOTES

NOTES

NOTES

NATIONAL SAFETY COUNCIL CHICAGO. • PRINTED IN U. S. A.

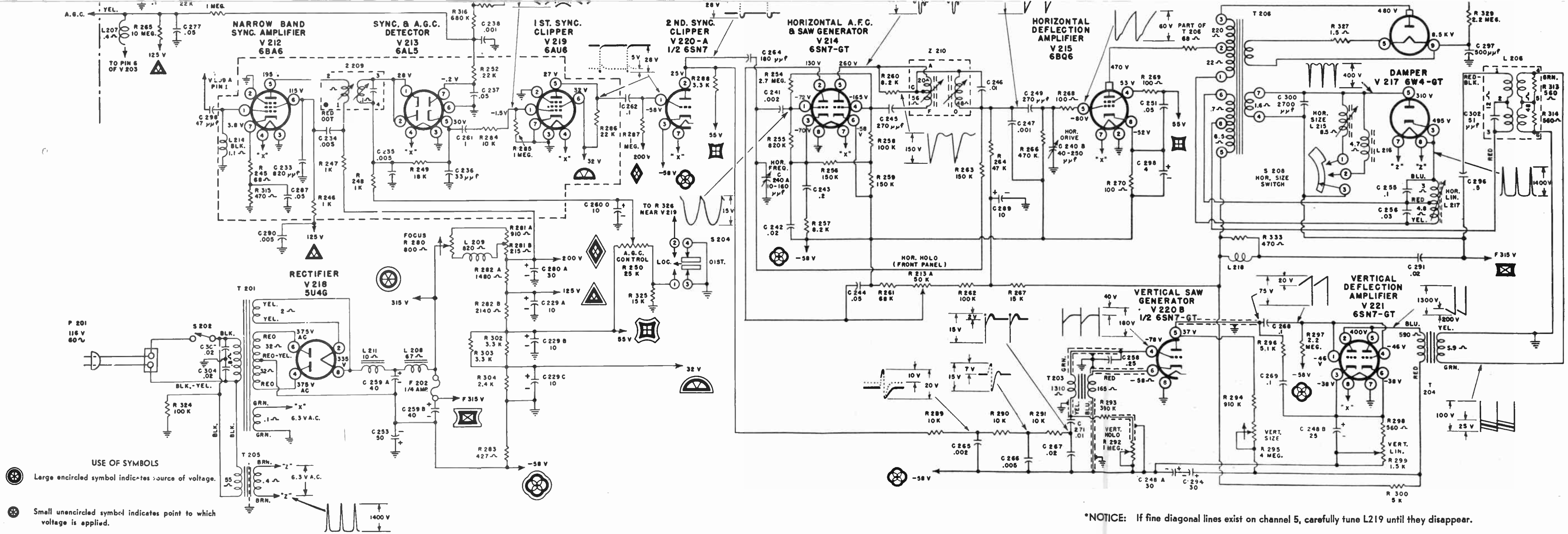

USE OF SYMBOLS

Large encircled symbol indicates source of voltage.

Small unencircled symbol indicates point to which voltage is applied.

*NOTICE: If fine diagonal lines exist on channel 5, carefully tune L219 until they disappear.

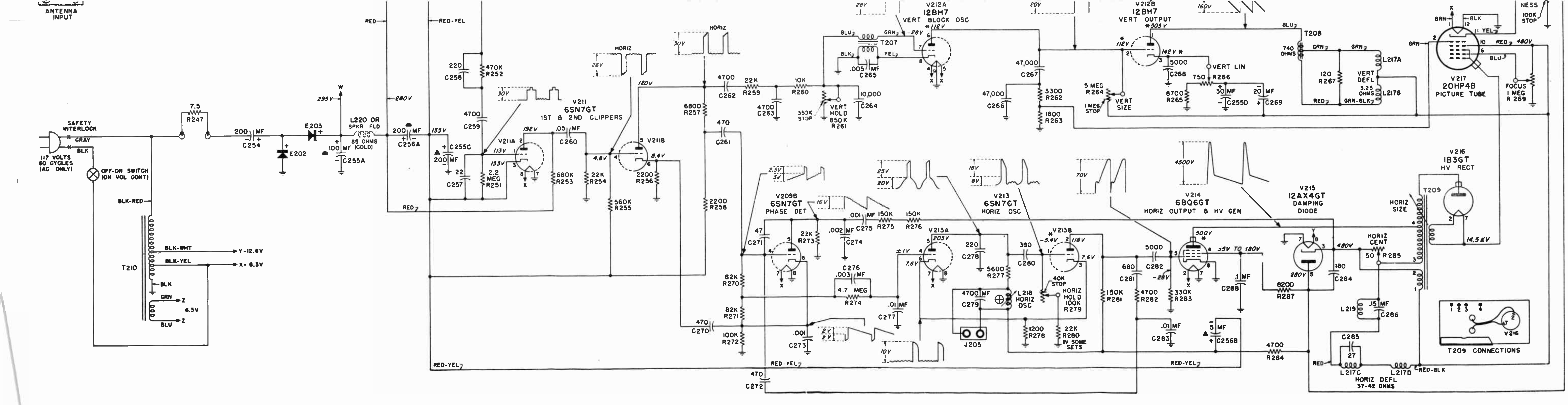
ANTENNA INPUT
SAFETY INTERLOCK
GRAY
BLK
117 VOLTS 60 CYCLES (AC ONLY)
OFF-ON SWITCH (ON VOL CONT)
BLK-RED
T210
BLK-WHT
Y-12.6V
BLK-YEL
X-6.3V
BLK
GRN
6.3V
BLU
7.5 R247
200 MF C254
E202
E203
295V
100 MF C255A
L220 OR SPKR FLD 85 OHMS (COLD)
200 MF C256A
280V
RED
RED-YEL
155V
C255C
200 MF
22 C257
220 C258
470K R252
4700 C259
2.2 MEG R251
V211A
192V
113V
155V
V211 6SN7GT 1ST & 2ND CLIPPERS
.05 MF C260
680K R253
22K R254
4.8V
V211B
120V
8.4V
2200 R256
560K R255
HORIZ
26V
30V
6800 R257
470 C261
2200 R258
4700 C262
22K R259
4700 C263
10K R260
10,000 C264
VERT HOLD 850K R261
350K STOP
.005 MF C265
T207
BLU
GRN
BLK
YEL
28V
-28V
V212A 12BH7 VERT BLOCK OSC
112V
20V
47,000 C267
47,000 C266
3300 R262
1800 R263
5 MEG R264
1 MEG STOP
VERT SIZE
V212B 12BH7 VERT OUTPUT
505V
142V
5000 C268
8700 R265
750 R266
VERT LIN
30 MF C255D
20 MF C269
160V
T208
740 OHMS
120 R267
VERT DEFL 3.25 OHMS
L217A
L217B
GRN-BLK
V217 20HP4B PICTURE TUBE
BRN
BLK
YEL
RED
480V
FOCUS 1 MEG R269
NESS
100K STOP
V216 1B3GT HV RECT
T209
HORIZ SIZE
14.5KV
2.3V
3V
V209B 6SN7GT PHASE DET
16V
47 C271
22K R273
.002 MF C274
.001 MF C275
150K R275
150K R276
C276 .003 MF
4.7 MEG R274
82K R270
82K R271
100K R272
470 C270
.001 C273
2V
470 C272
.01 MF C277
25V
20V
V213A
203V
±1V
7.6V
220 C278
5600 R277
18V
8V
V213 6SN7GT HORIZ OSC
390 C280
V213B
-5.4V
118V
7.6V
40K STOP
HORIZ HOLD 100K R279
4700 MF C279
L218 HORIZ OSC
1200 R278
22K R280 IN SOME SETS
J205
10V
70V
150K R281
4500V
V214 6BQ6GT HORIZ OUTPUT & HV GEN
680 C281
5000 C282
-28V
4700 R282
330K R283
500V
55V TO 180V
.1 MF C288
.01 MF C283
5 MF C256B
RED-YEL
4700 R284
V215 12AX4GT DAMPING DIODE
280V
8200 R287
180 C284
480V
HORIZ CENT
50 R285
L219
.15 MF C286
C285 27
L217C
L217D
RED-BLK
HORIZ DEFL 37-42 OHMS
T209 CONNECTIONS
V216

SCHEMATIC DIAGRAM FOR DUMONT RA117-A CHASSIS

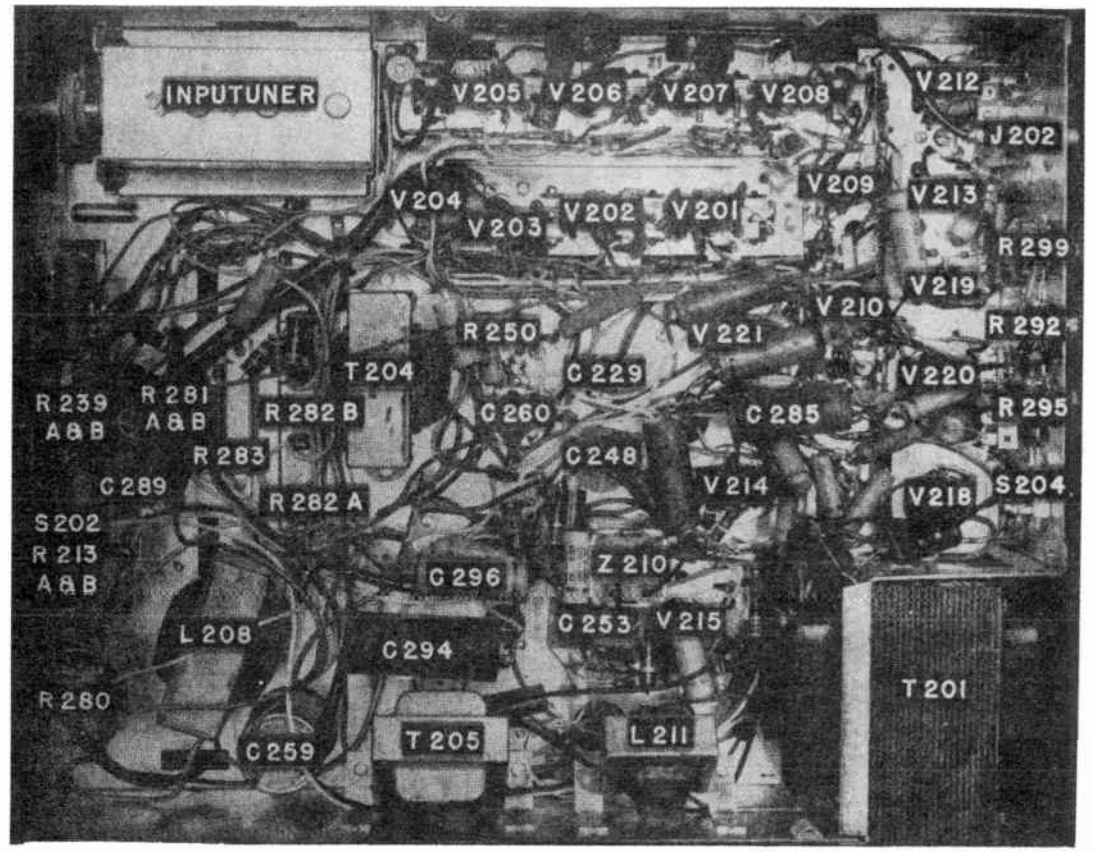

TUBE LOCATION RA-117A

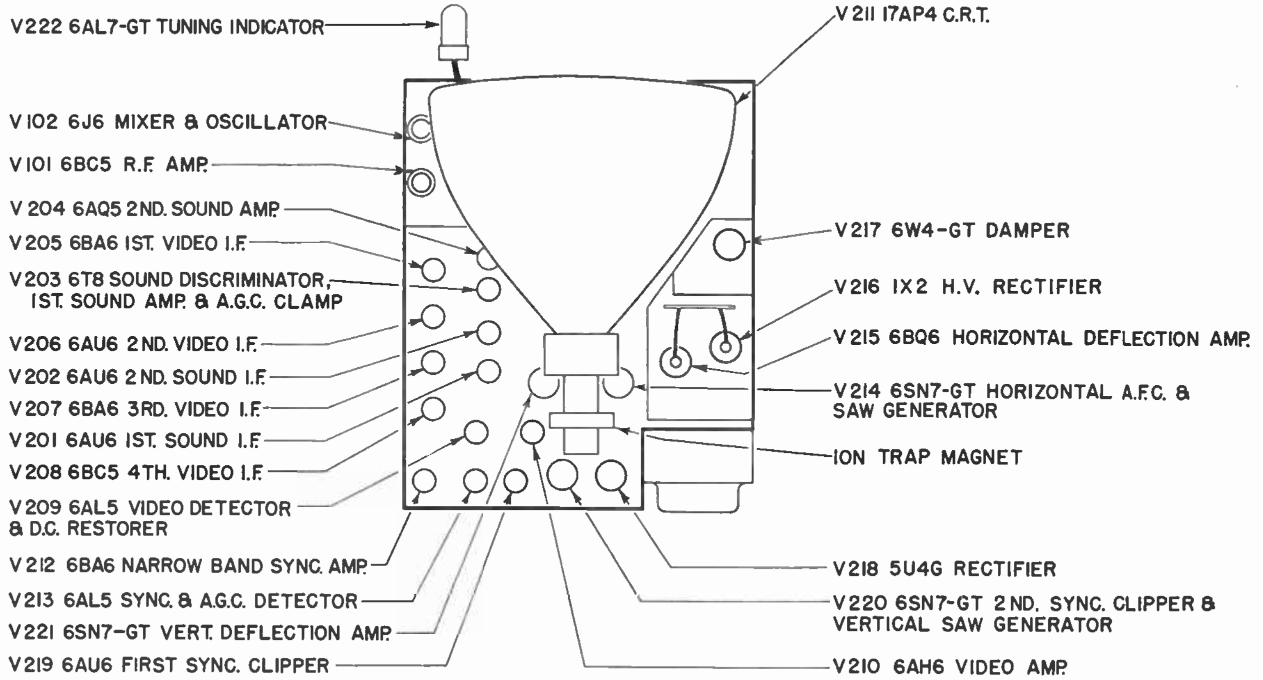

RESISTANCE MEASUREMENTS — ALL READINGS TO GROUND
RA-117 CHASSIS

TUBE	1	2	3	4	5	6	7	8
V201	1.3M	0	0	Fil	8K	6.5K	39	
V202	270K	0	0	Fil	6.5K	6.5K	39	
∘V203	100K	100K	200K	Fil	0	1.8M	0	10M
V204	470K	270	Fil	0	8.2K	8K	NC	
V205	1.5M	0	0	Fil	8K	16K	39	
V206	.7	0	0	Fil	8K	6.5K	120	
V207	1.5M	0	0	Fil	10K	16K	68	
V208	6.8K	220	0	Fil	8K	6.5K	NC	
V209	.5	110K	0	Fil	1M	0	4K	
V210	4K	0	0	Fil	12K	80K	22-1K	
*V211	0	1M						
V212	3	0	0	Fil	8K	6.5K	538	
V213	4.5K-10K	4.5K-10K	0	Fil	22K-28K	0	1M	
V214	1M	75K-120K	310K	260K	260K	427	Fil	0
†V215	NC	0	NC	3.5K	580K	580K	Fil	527
V217	NC	NC	230K	NC	8K	NC	230K	230K
V218	NC	8K	NC	470	NC	470	NC	8K
V219	1M	0	0	Fil	23K	2.4K	0	
V220	1.1M	6.5K	427	400K-1.5M	1.3M-6.8M	600	Fil	0
V221	2.3M	245K	2K	2.3M	245K	2K	0	Fil
V222	3.3K	Fil	7.2K	1.4M	0	0	0	3.3K
**V223	INF	NC	NC	NC	INF	NC	INF	NC

	9		10	11	12		Cap		9	Cap
∘V203	350K	*V211	8K	80K	Fil	†V215	230K	**V223	INF	230K

Rear selector switch in "TV" position.
Instrument used—RCA Model 195-A Voltohmyst.
All readings in ohms—K = thousand M = million.
Two readings for a given point indicate an adjustable resistance is in the measured circuit.

NOTES:

1. Issue #12 through ECN 4624.
2. Voltage, resistance and waveform measurements.
   - a) Instrument used — RCA Model 195-A Voltohmyst (for voltage and resistance readings.)
   - b) Voltage measurements taken to ground, no signal input.
   - c) Voltage measurements made with Phono-TV Switch (S201) in TV position; contrast and brightness minimum.
   - d) All coil readings were made with the coils disconnected.
   - e) Video waveforms measured with contrast set for 30 volts, peak-to-peak at CRT, pin 11.
   - f) Local-Distant switch (S204) in local position.

RESISTANCE READINGS OF COILS

(All readings in ohms)

All coil readings shown were taken with coils disconnected.

Symbol	Reading
L201	15
L202	8
L203	3.6
L204	15
L205	3
L207	0.4
L212	0.2
L214	3
L215	8.5
L216	4.7
L218	3.8

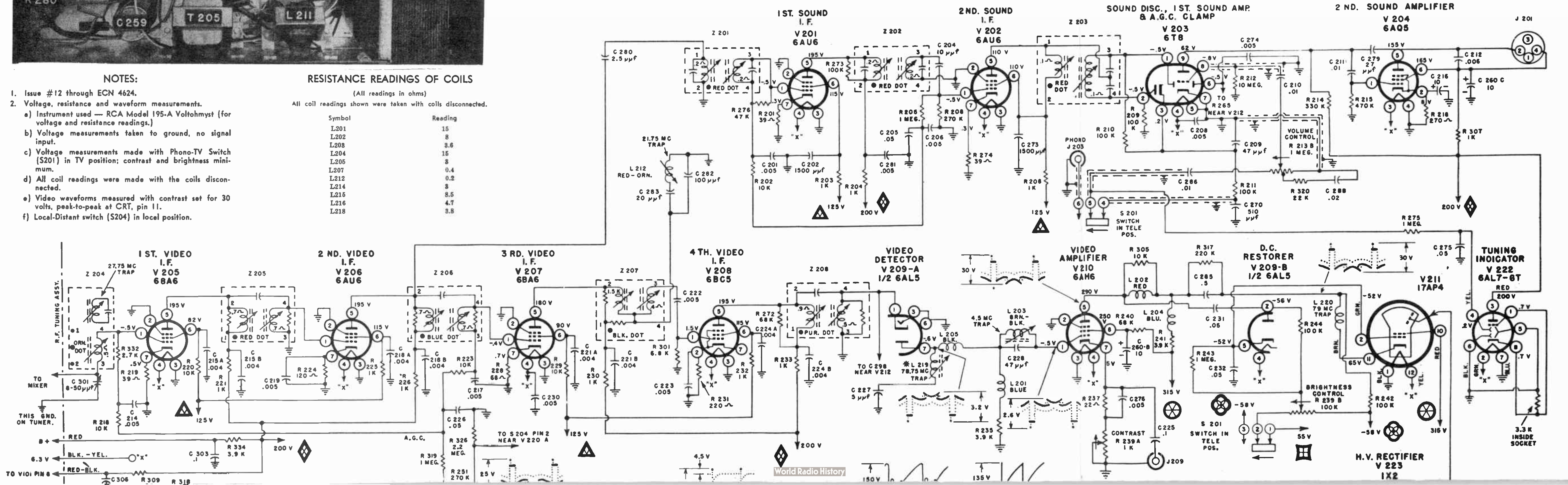

World Radio History

Motorola®

TELEVISION CHASSIS TS-351

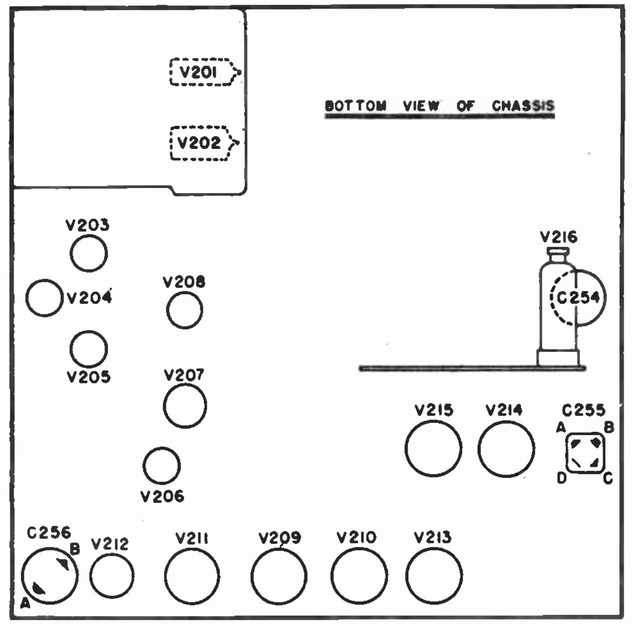

NOTES

VOLTAGE MEASUREMENTS:

1. MADE WITH A VTVM FROM POINT INDICATED TO CHASSIS.
2. LINE VOLTAGE - 117 VOLTS.
3. ANTENNA DISCONNECTED. (S202 IN LOCAL POSITION)
4. CHANNEL SELECTOR SWITCH ON CHANNEL WHICH DEVELOPS LESS THAN 1 VOLT NOISE AT PIN NO. 3 OF TEST RECEPT.
5. CONTRAST CONTROL MAXIMUM CLOCKWISE POSITION.
6. ALL OTHER CONTROLS IN NORMAL OPERATING POSITION.
7. * VARIES WITH SETTINGS OF CONTROLS.

CAUTION: DO NOT ATTEMPT VOLTAGE READINGS ON THE 1B3GT OR SCOPE READINGS ON THE 6BQ6GT PLATE WITH ORDINARY EQUIPMENT.

WAVEFORMS:

1. OBSERVED ON DUMONT MODEL 241 OSCILLOSCOPE.
2. CONTRAST CONTROL SET FOR SIGNAL OF 45V P TO P AT PLATE OF VIDEO AMP TUBE.
3. ALL OTHER CONTROLS IN NORMAL OPERATING POSITION.
4. 6BQ6GT HV GEN TUBE REMOVED TO ELIMINATE HV PULSE INTERFERENCE FROM SCOPE WHEN OBSERVING ALL WAVEFORMS, EXCEPT THOSE FROM PHASE DET THROUGH HORIZ CIRCUIT.

GENERAL:

RESISTORS INDICATED IN OHMS, K = 1000 OHMS.

CAPACITORS INDICATED IN MICROMICROFARADS UNLESS OTHERWISE SPECIFIED. WHEN INDICATED IN MICRO-MICROFARADS THEY ARE CERAMIC DISC, TUBULAR, OR MICA TYPES, EXCEPT FOR VALUES SHOWN IN RTMA CODE, SUCH AS 47,000, WHICH ARE THE MOLDED PAPER TYPE AND PREFERRED WHERE INDICATED.

COILS INDICATED IN MICROHENRIES.

⊕ = IRON TUNING CORES.

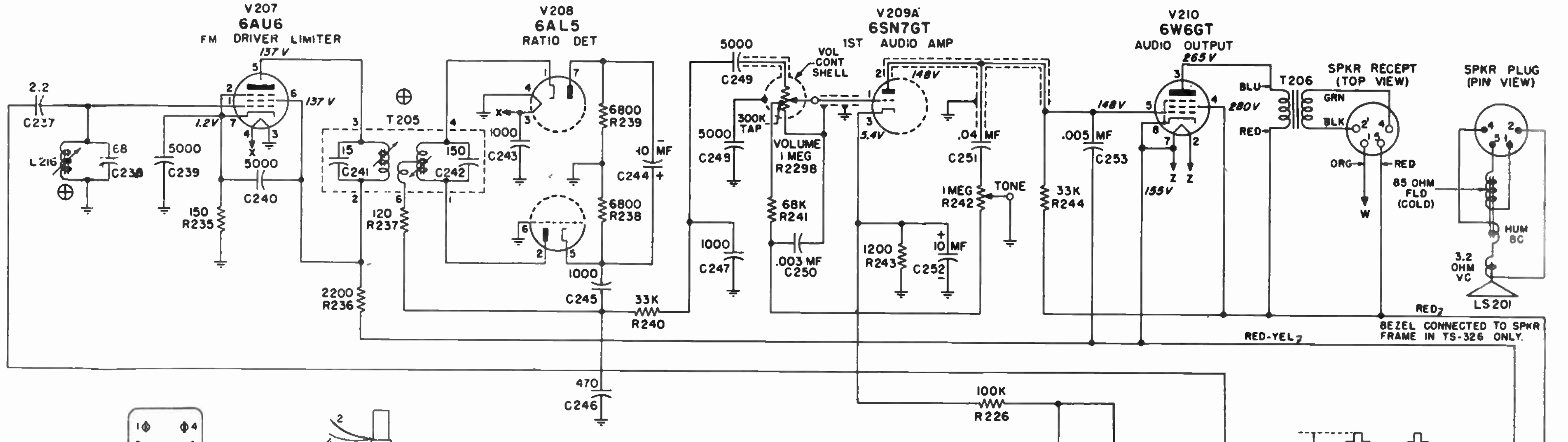

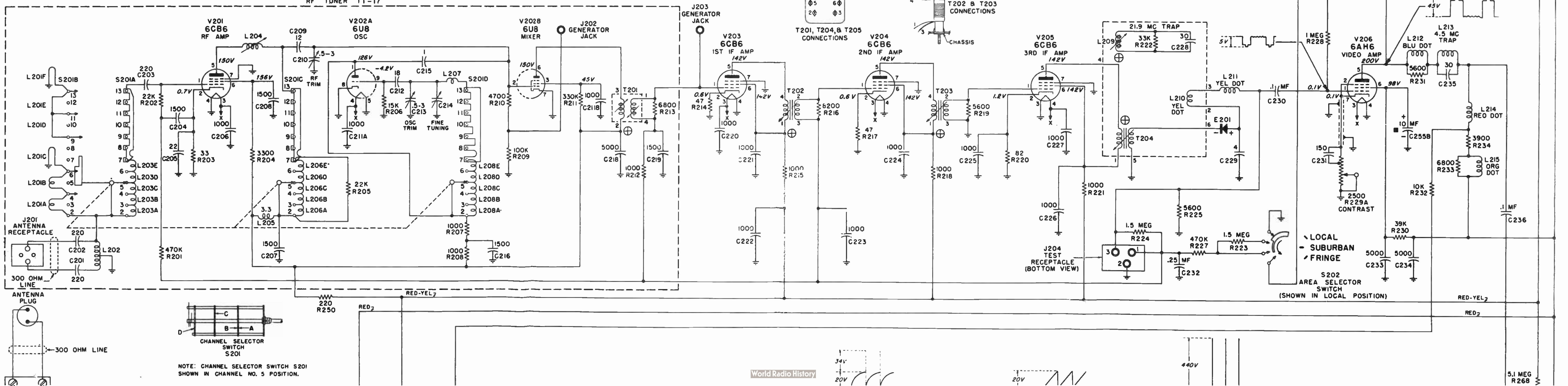

SCHEMATIC DIAGRAM FOR RCA KCS 20J-1 OR KCS 20K-2 TV CHASSIS (MODELS 6TS30 AND 8TS30)

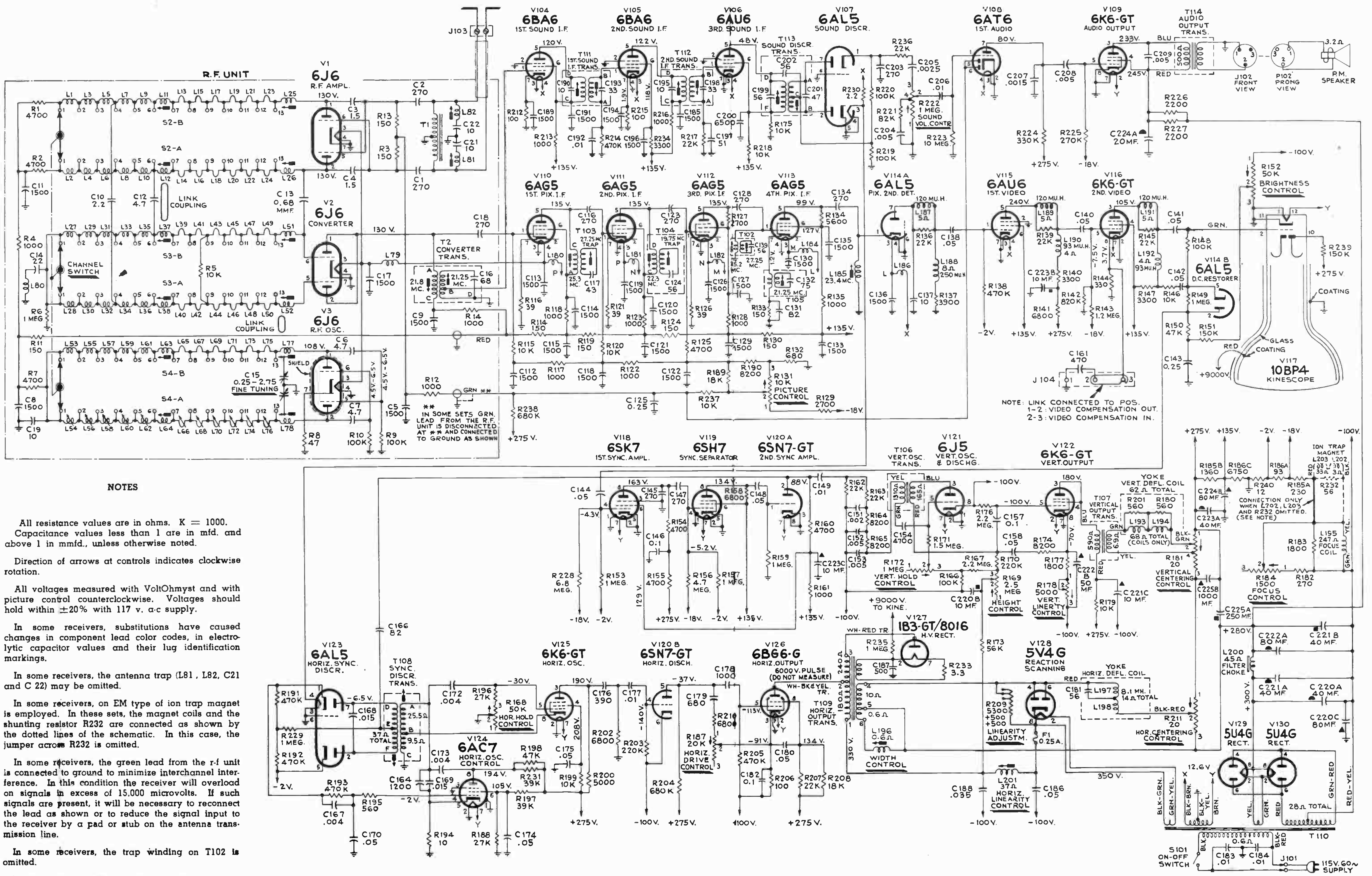

NOTES

All resistance values are in ohms. K = 1000. Capacitance values less than 1 are in mfd. and above 1 in mmfd., unless otherwise noted.

Direction of arrows at controls indicates clockwise rotation.

All voltages measured with VoltOhmyst and with picture control counterclockwise. Voltages should hold within ±20% with 117 v. a-c supply.

In some receivers, substitutions have caused changes in component lead color codes, in electrolytic capacitor values and their lug identification markings.

In some receivers, the antenna trap (L81, L82, C21 and C 22) may be omitted.

In some receivers, on EM type of ion trap magnet is employed. In these sets, the magnet coils and the shunting resistor R232 are connected as shown by the dotted lines of the schematic. In this case, the jumper across R232 is omitted.

In some receivers, the green lead from the r-f unit is connected to ground to minimize interchannel interference. In this condition the receiver will overload on signals in excess of 15,000 microvolts. If such signals are present, it will be necessary to reconnect the lead as shown or to reduce the signal input to the receiver by a pad or stub on the antenna transmission line.

In some receivers, the trap winding on T102 is omitted.

In some receivers, the fuse F1 is omitted.

SCHEMATIC DIAGRAM FOR RCA KCS68C OR KCS68E TV CHASSIS (MODELS 21T159, 21T165, 21T176, 21T177, 21T178, 21T179)

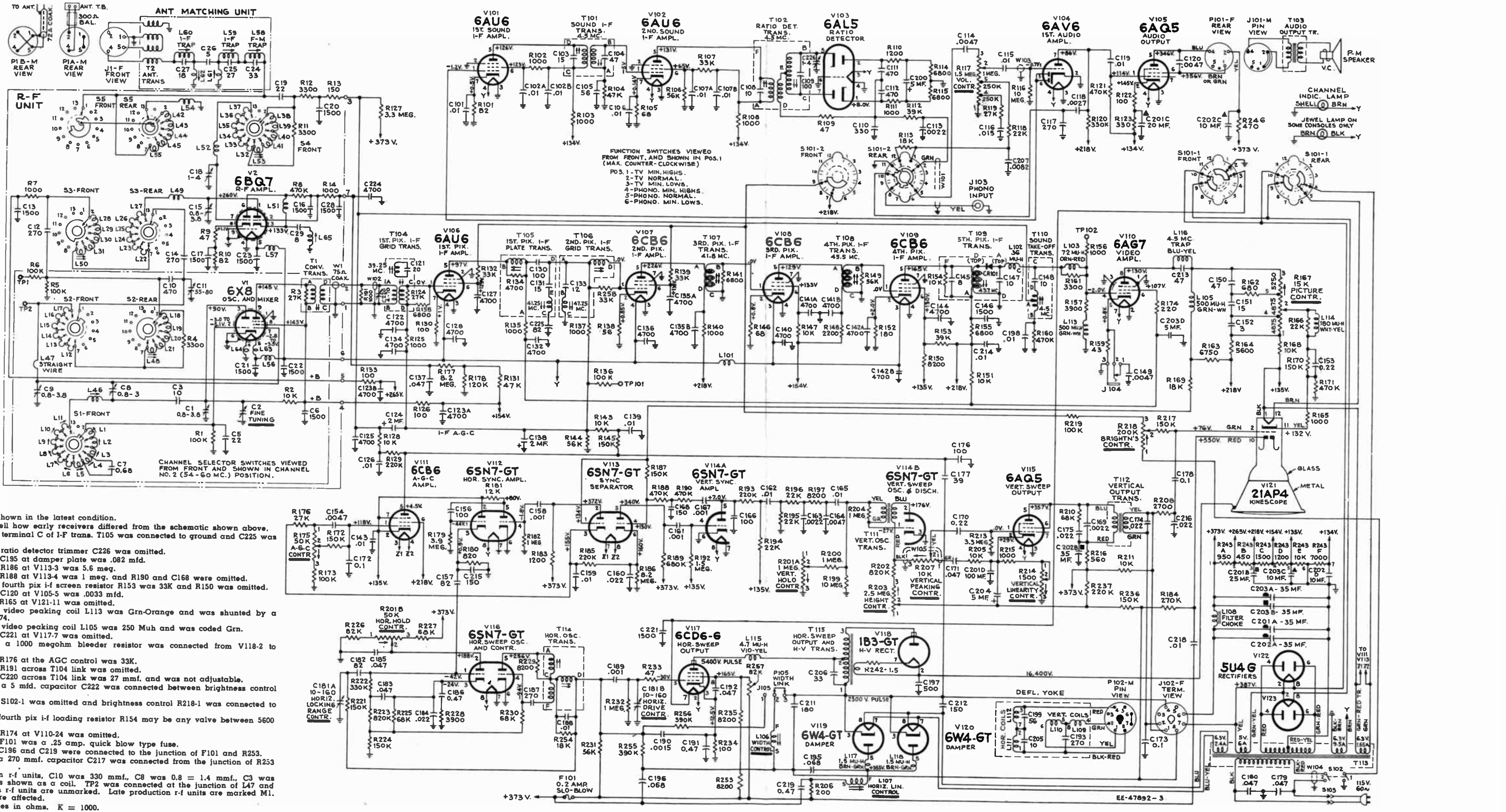

The schematic is shown in the latest condition.

The notes below tell how early receivers differed from the schematic shown above.

In some receivers, terminal C of I-F trans. T105 was connected to ground and C225 was omitted.

In some receivers ratio detector trimmer C226 was omitted.

In some receivers C195 at damper plate was .082 mfd.

In some receivers R186 at V113-3 was 5.6 meg.

In some receivers R188 at V113-4 was 1 meg. and R190 and C168 were omitted.

In some receivers, fourth pix i-f screen resistor R153 was 33K and R150 was omitted.

In some receivers C120 at V105-5 was .0033 mfd.

In some receivers R165 at V121-11 was omitted.

In some receivers video peaking coil L113 was Grn-Orange and was shunted by a 6800 ohm resistor R174.

In some receivers video peaking coil L105 was 250 Muh and was coded Grn.

In some receivers C221 at V117-7 was omitted.

In some receivers a 1000 megohm bleeder resistor was connected from V118-2 to ground.

In some receivers R176 at the AGC control was 33K.

In some receivers R191 across T104 link was omitted.

In some receivers C220 across T104 link was 27 mmf. and was not adjustable.

In some receivers a 5 mfd. capacitor C222 was connected between brightness control R218-3 and ground.

In some receivers S102-1 was omitted and brightness control R218-1 was connected to ground.

In some receivers fourth pix i-f loading resistor R154 may be any valve between 5600 to 10K.

In some receivers R174 at V110-24 was omitted.

In some receivers F101 was a .25 amp. quick blow type fuse.

In some receivers C196 and C219 were connected to the junction of F101 and R253.

In some receivers a 270 mmf. capacitor C217 was connected from the junction of R253 and F101 to ground.

In early production r-f units, C10 was 330 mmf., C8 was 0.8 = 1.4 mmf., C3 was 12 mmf. and L47 was shown as a coil. TP2 was connected at the junction of L47 and C9. Early production r-f units are unmarked. Late production r-f units are marked M1. Replacement parts are affected.

All resistance values in ohms. K = 1000.

All capacitance values less than 1 in MF and above 1 in MMF unless otherwise noted.

Direction of arrows at controls indicates clockwise rotation.

All voltages measured with "VoltOhmyst" and with no signal input. Voltages should hold within ±20% with 117 v. a-c supply.

CROSLEY

SCHEMATIC WIRING DIAGRAM

MODELS: DU-21CDM1, DU-21CDN, DU-21CHM1, DU-21COB1, DU-21COL, DU-21COLB, DU-21COM1

(Chassis 357-1)

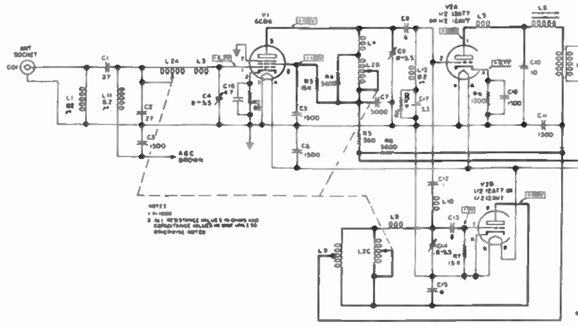

R. F. TUNER SCHEMATIC DIAGRAM

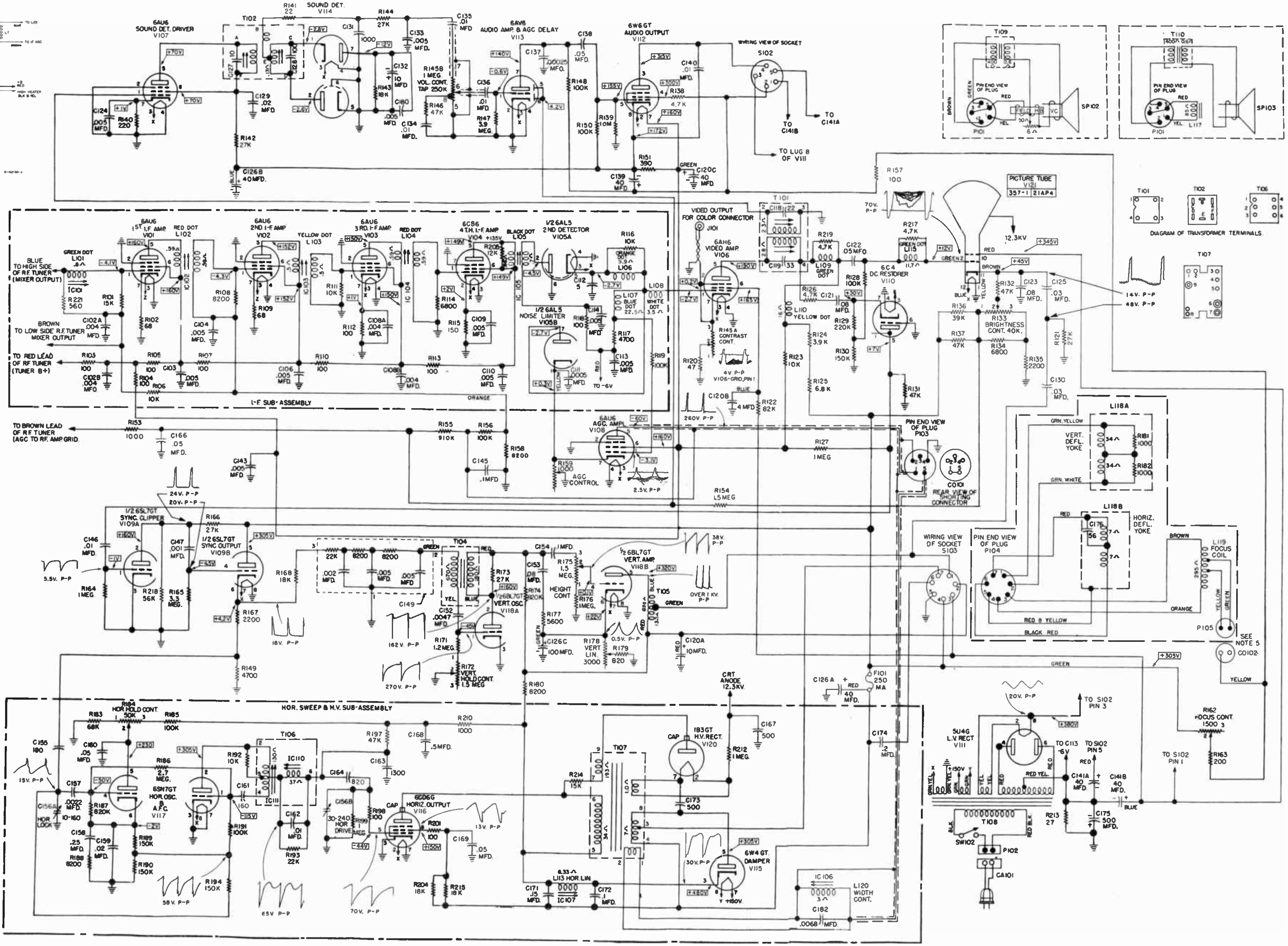

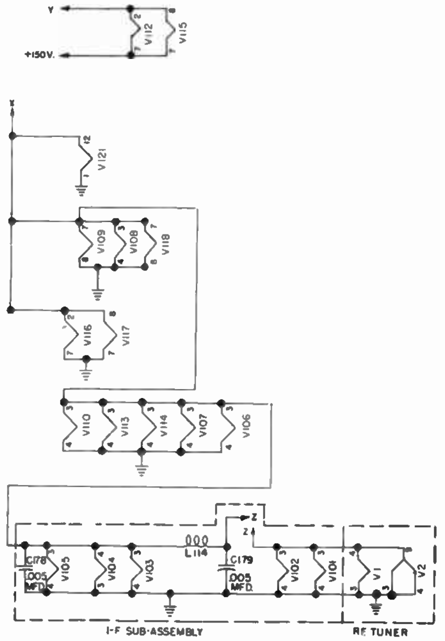

NOTES:

1. ALL VOLTAGES MEASURED WITH AN ELECTRONIC VOLTMETER CONNECTED FROM SOCKET LUG TO CHASSIS.
2. SUPPLY VOLTAGE 117V., 60 CYCLE, AC.
3. K - 1000
4. ALL CAPACITANCE VALUES IN MMF. AND ALL RESISTANCE VALUES IN OHMS UNLESS OTHERWISE NOTED
5. SOME CR TUBES REQUIRE CONNECTION TO GREEN TAP TO OBTAIN FOCUS.

PHILCO TELEVISION R-F CHASSIS 41, DEFLECTION CHASSIS D-1 FOR MODELS 52-T2110, 52-T2144, 52-T2182, 52-T2182L

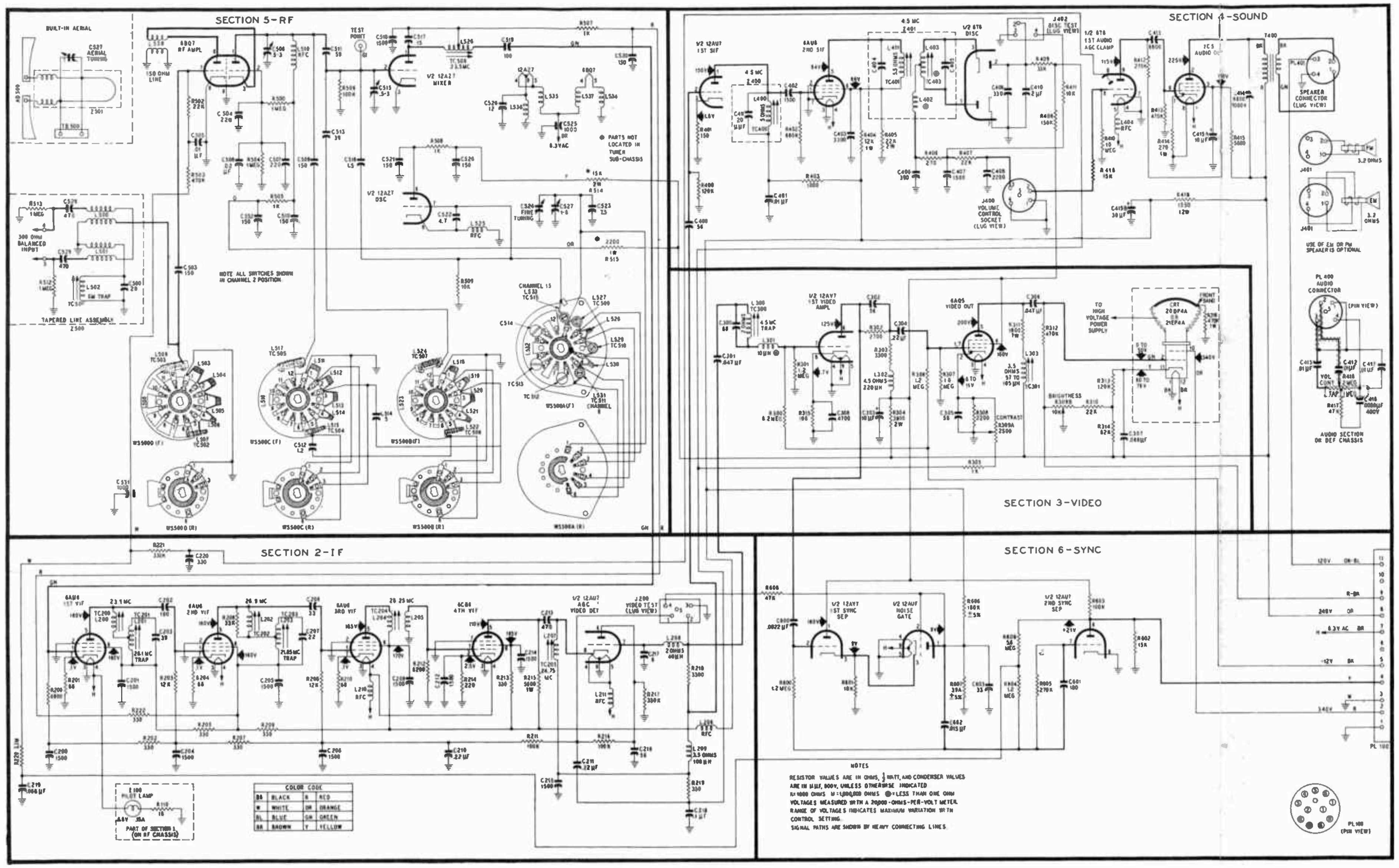

NOTES

RESISTOR VALUES ARE IN OHMS, ½ WATT, AND CONDENSER VALUES ARE IN μμF, 600V, UNLESS OTHERWISE INDICATED

K=1000 OHMS M=1,000,000 OHMS ●=LESS THAN ONE OHM

VOLTAGES MEASURED WITH A 20,000-OHMS-PER-VOLT METER

RANGE OF VOLTAGES INDICATES MAXIMUM VARIATION WITH CONTROL SETTING

SIGNAL PATHS ARE SHOWN BY HEAVY CONNECTING LINES

COLOR CODE			
BK	BLACK	R	RED
W	WHITE	OR	ORANGE
BL	BLUE	GN	GREEN
BR	BROWN	Y	YELLOW

R-F Chassis 41, Schematic Diagram

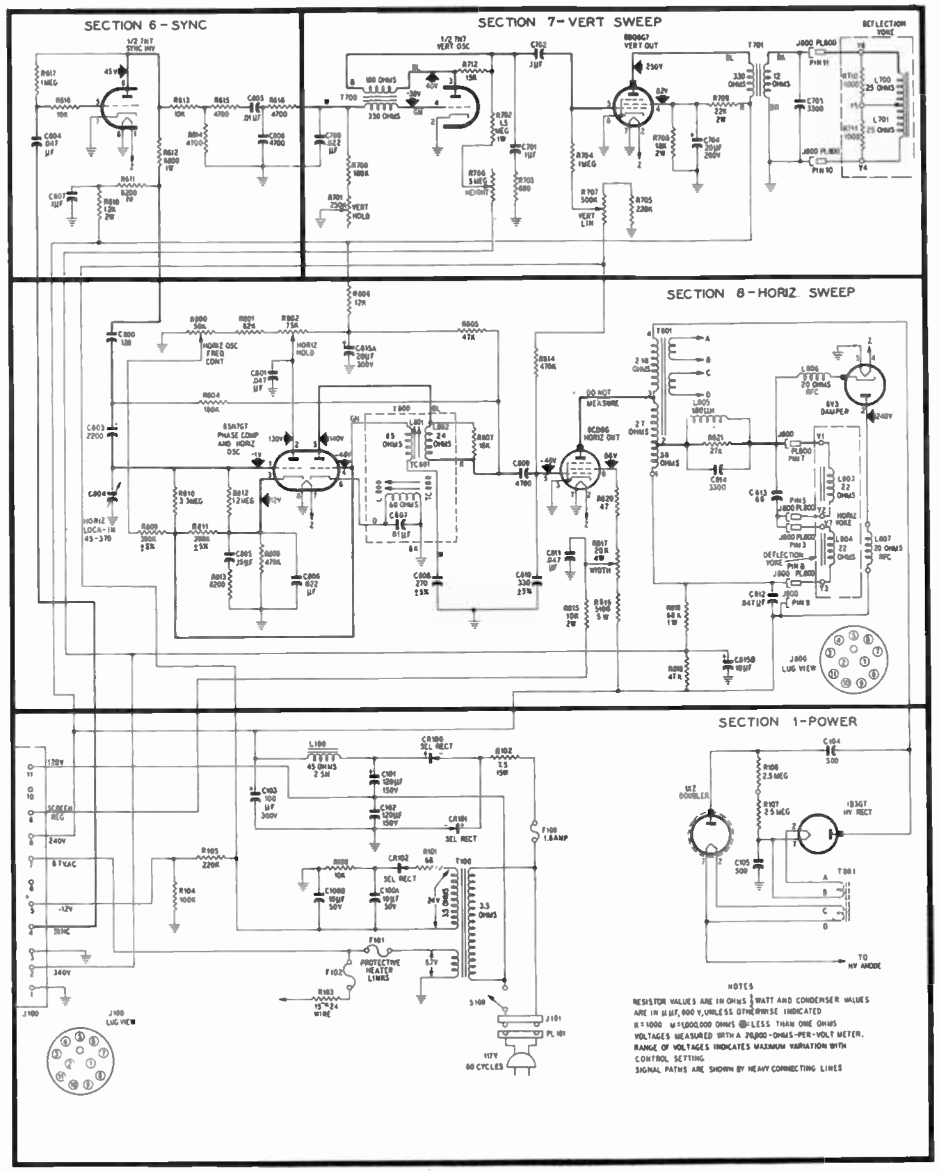

NOTES

RESISTOR VALUES ARE IN OHMS ½ WATT AND CONDENSER VALUES ARE IN μμF, 600 V, UNLESS OTHERWISE INDICATED

K=1000 M=1,000,000 OHMS ●=LESS THAN ONE OHMS

VOLTAGES MEASURED WITH A 20,000-OHMS-PER-VOLT METER.

RANGE OF VOLTAGES INDICATES MAXIMUM VARIATION WITH CONTROL SETTING

SIGNAL PATHS ARE SHOWN BY HEAVY CONNECTING LINES

Deflection Chassis D-1, Schematic Diagram