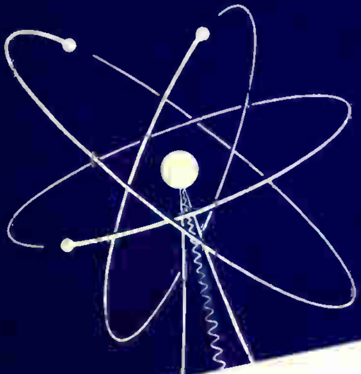

MODERN TELEVISION

Lesson TPC-1T

DeVRY Technical Institute
4141 W. Belmont Ave., Chicago 41, Illinois
Affiliated with DeFOREST'S TRAINING, INC.

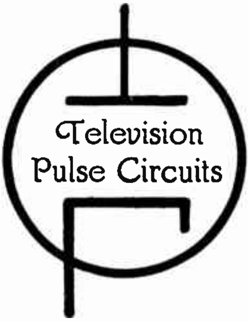

MODERN TELEVISION

DeVRY Technical Institute
4141 W. Belmont Ave., Chicago 41, Illinois
Affiliated with DeFOREST'S TRAINING, INC.

Modern television makes it possible to transmit both sound and picture from the studio to viewer's homes.

Courtesy Radio Corporation of America

Television Pulse Circuits

MODERN TELEVISION

Contents

Each day for millions of years, the beautiful sun has risen upon this continent, or upon the great waste of waters that covered what is a continent today. Each rising of the sun found the earth better, nearer the perfection that is the earth's destiny. What the sun is to this material planet, education, a sun of knowledge and progress, is to the human mind. Its rising does away with clouds, promising a new, better day.

—Arthur Brisbane

MODERN TELEVISION

The modern television system, contrary to popular belief, is not a unique system by itself. It merely is a special form of radio communication. One of the main differences in standard broadcast and television is the type of input and output transducers. In standard broadcast, sound is converted to electric energy and radiated into space and the signal is converted back to sound at the receiver. At the television transmitter, the light and shades of a scene are converted to electric energy and radiated into space. At the receiver the signal is converted to an image on the receiver screen.

However, due to the drastically different types of information found in the sound and picture signals, two complete and separate transmitters are used in a television broadcast system. Frequency modulation is used for the sound signals while the picture signal, combined with control signals generated at the transmitter, amplitude modulates a separate transmitter. For the same reason, although the tuning and i-f circuits may be combined, separate sound and picture circuits are employed throughout the rest of the television receiver.

Several important factors are involved in the development of a practical television system. The system must accomplish the equivalent of the most important acts performed by the human optical system in the process of "seeing." The total intelligence conveyed by the eye, from the scene to the brain of the observer, consists of (1) distribution of light and shade, (2) motion, (3) color distribution, and (4) perspective.

The television camera changes the scene into electric pulses which are amplified and transmitted.

Courtesy CBS-Columbia Inc.

Listed in the order of their importance, these factors show that the primary requirement for the mental perception of a scene is knowledge of the distribution of light and shade, because without this knowledge, no visual intelligence is possible. As this factor alone produces only a static picture, motion must be added to provide the minimum requirements of a practical television system. It has been found that while color can be dispensed with, because the eye does not insist on reproduction in natural colors, maximum picture detail is very important, and much of the television development engineering has concentrated on this aspect.

At the present time, no method is known by which an entire scene may be transmitted instantaneously with any reasonable amount of detail. To translate an optical picture from light values to corresponding electrical currents or potentials, some form of photoelectric device is necessary. However, if a photosensitive surface were simply held up before a scene to be transmitted, the photoelectric effect would be proportional to the average illumination of the whole scene and could not give any information as to the particular distribution of its light and dark areas. It would be like trying to take a photograph by snapping the shutter without a pinhole or other form of lens in the camera. No picture would be formed because the film would be uniformly exposed over all of its surface to a degree depending upon the average illumination of the subject and the length of exposure.

If only the left half of the scene to be transmitted were allowed to affect the photosensitive device, and then only the right half, information regarding the relative brightness of the two sides of the scene would be obtained, although nothing resembling a picture would be transmitted. This method of allowing different parts of the scene to affect the photosensitive

A modern television transmitting antenna.

Courtesy Federal Telecommunication Labs., Inc.

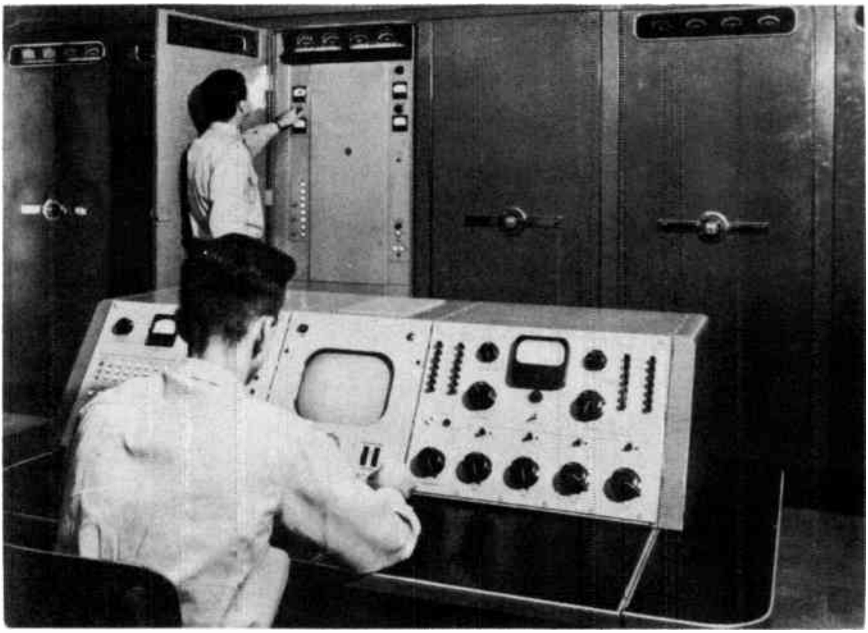

The television transmitter includes two complete and separate units, one for sound and the other for picture information.

Courtesy Federal Telecommunication Labs., Inc.

device in sequence is known as a **sequential** system, to distinguish it from the INSTANTANEOUS transmission of picture information which is accomplished by the human eye and its optical nerves.

ANALYSIS OF ACTION OF HUMAN EYE

As shown by the simplified sketch of Figure 1, in the human eye the light from the scene is focused by a lens upon the inner light sensitive coating on the rear wall. This light sensitive coating, called the retina, is composed of about 18,000,000 elements, each of which reacts to light like a tiny photo-voltaic cell. Each element is connected to the brain by an individual fibre of the optic nerve and is capable of acting independently of the others. Thus, each of these tiny light sensitive elements (rods or cones) can transmit to the brain information regarding the intensity and the position of the particular ray of light striking it. This information, simultaneously reaching the brain from all of the elements, forms instantly a mental image of the object viewed.

The amazing abilities of the tiny elements of the retina are:

(1) to distinguish between various degrees of light and shade;

(2) to distinguish between colors;

(3) to transmit sensations to the brain for a short time after the object has disappeared or moved;

(4) to transmit information pertaining to the height and width of the object being viewed;

(5) to perceive detail in the object;

(6) to record motion, and

(7) with both eyes, to realize perspective.

To transmit a picture with relative light intensities, motion, color, and perspective, it would require a television system employing a pair of circuits for each of the three primary colors, six channels in all, with each pair of received images arranged in stereoscopic manner. Eliminating color and perspective permits the transmission of a "black-and-white" motion picture over a single channel television system. However, the instantaneous transmission of visual information as performed by the eye is impossible, because of the impracticability of using even a few conductors or radio carriers between the transmitter and each receiver not to mention the 18 million of them which would be required to equal the sensitivity of the eye.

SEQUENTIAL PICKUP OF PICTURE ELEMENTS

Basically, a black-and-white still picture consists of nothing more than a particular geometrical arrangement of various sized areas of light and shade. This can be seen immediately upon the close examination of a photograph which, as printed in a newspaper, consists of many tiny dots whose diameter varies with the light and shade in the different areas.

These dots are extremely small points of light or shade which constitute the basic component parts of the image, and since these are the smallest divisions or units into which the picture is divided, they are called PICTURE ELEMENTS.

As stated above, it is impractical to have a separate transmission system for each element, therefore to transmit pictures by television the only alternative is to use one transmission system and send the respective items of information over it, one at a time, in orderly succession. At the receiver, the picture elements are reassembled to reform the picture and any order of selection of elements may be used as long as the same sequence is followed in both transmitter and receiver.

An iconoscope camera tube. The pictures are focused on the mosaic mounted inside the face of the tube.

Courtesy RCA

When this process takes place at a sufficiently rapid rate, the eye is deceived into "seeing" the entire picture at once although but one element is being produced on the receiver screen at any instant. If it were not for what is known as the **persistence of vision** of the human eye, the sequential method of television would not be a success. Although it introduces complications, it is the only practical method available at the present time.

The pickup or selection of picture elements is known as **scanning** and various sequences or methods have been tried, such as sine wave scanning, spiral scanning and radial scanning. However, as most of these produce distortions of the image, due to different scanning rates on different areas, the standard method used in present day television is called LINEAR SCANNING.

This method of scanning an image is like that by which a reader SCANS a printed page such as this one. The eye begins at the upper left-hand corner, travels along the first line of words until it reaches the right-hand edge, then suddenly reverses its direction of movement and returns quickly to the beginning of the second line where again it begins its uniform left to right motion. This sequence continues until, on reaching the right end of the last line at the bottom of the page, it moves to the upper left-hand corner of the next page.

To illustrate this action, Figures 2A, 2C, 2E, and 2G represent a surface of finely divided photosensitive islands located in the television camera tube at the transmitter. The image, of the letter "T" is focused optically on this surface which, for simplicity, is divided into 256 small squares or elements each with an area equal to that covered or affected by the selector.

The selector starts scanning at the upper left hand corner of Figure 2A and transmits a signal which indicates this element is bright or white. Connected to the transmitter by wire or radio the receiver must convert this signal to a bright or white element on its screen. In Figure 2, the receiver screen at B, D, F, and H is the same size as the photosensitive surface in the television camera, but in practice, it may be proportionally larger or smaller. However, the receiver screen and camera sensitized surface always have an equal number of elements. MAKING THE RECEIVER SCREEN LARGER INCREASES THE AREAS OF ITS ELEMENTS; IT DOES NOT INCREASE THE IMAGE DETAILS.

As indicated in Figure 2A, the selector at the upper left element of the camera mosaic transmits a signal which causes the reproducer in Figure 2B to generate a bright element at the upper left element of its screen.

The selector and reproducer move at the same speed to the right and when the second elemental area is reached, the selector transmits the information that this element is white also. This is shown by Figures 2C and 2D. Movement continues along the top line of elements, and then along the second line, etc., according to the linear scanning method described above. At the third element of the third line, the selector transmits the fact that this area is shaded, or black, and the reproducer correspondingly produces a dark spot at this point on the receiver screen. The same information is transmitted when the selector and reproducer are at their respective fourth and fifth elements of the third lines, as shown in Figures 2E and 2F.

The action continues, element by element and line by line, until the entire area of both screens has been covered. Conditions at the eighth element of the tenth line, with the "picture" almost completed, are shown in Figures 2G and 2H.

Since the persistence of vision of the human eye is 1/16 of a second at most, the entire image must be scanned in 1/16 of a second or less in order that the impression of the first or upper left-hand corner element does not die away before the last or lower right-hand corner element is produced on the receiver screen.

Although the eye "sees" a complete image, at this rate a definite flicker is noticeable and, to overcome this effect, the scanning speed must be increased. A similar condition is found in motion pictures, the film for which actually consists of a great many still pictures, each differing slightly from those immediately preceding and following it. Here it has been found that a picture-repetition rate faster than 15 per second is sufficient to produce the illusion of motion without excessive jerkiness, but to satisfy the persistence of vision of the eye, the individual pictures may be projected on the screen at a rate of 16 per second. However, for sound pictures, the projection rate has been increased to 24 per second. In modern television the entire image is completely scanned 30 times each second to provide a picture. Hence, it has a FRAME frequency of 30 per second.

Although only 256 elementary areas are used in the example of Figure 2, in practice the area to be scanned is actually broken down into many more elements. In an earlier explanation it was demonstrated that, the smaller the elements, the truer the reproduced image, therefore in modern television reception, most images contain from 100,000 to 200,000 elements.

To reproduce 200,000 elements successively in 1/30 of a second requires a transmission rate of 30 x 200,000 or 6,000,000 elements per second. Assuming two elements make up one electrical cycle, the transmission and reception equipment have to respond to a maximum picture or video frequency of 6,000,000 ÷ 2 or 3,000,000 cycle (3 mc) per second. However, for greater detail, more elements are necessary and the video frequency may be as high as 4 mc.

A monitor is used in the studio to observe the picture being transmitted.

Courtesy Federal Telecommunication Labs., Inc.

In television transmitters, most video frequency amplifiers are designed to pass frequencies as high as 5 or 6 megacycles without attenuation so as to assure the passing of signals corresponding to the maximum picture details. The problem of dissecting and reassembling images at this terrific rate has been solved by the application of cathode ray tubes, the electron beams of which correspond to the selector and reproducer of Figure 2 and are capable of moving at the required speed.

Known as a camera tube, a modified form of cathode ray tube is employed to convert the scene from light to electricity by means of a light-sensitive plate. Focused onto the light sensitive plate by an optical lens system, the optical image forms an electric charge pattern that corresponds to the light image.

Scanning the charge pattern in the linear motion described for Figure 2, an electron beam converts the pattern into an electric current, the instantaneous values of which correspond to the relative brightness of the individual elements of the light image. After proper amplification, this picture signal is used to modulate a radio frequency wave which is radiated from the transmitter antenna.

IMAGE REPRODUCTION

At the receiver, the modulated carrier is selected, amplified, and demodulated, after which the "picture signal" is again amplified and finally applied to the cathode ray picture tube, which is similar to those used in cathode ray oscilloscopes.

A deflection system causes the beam to travel over the luminescent screen in the same scanning movement and in step, or in **synchronism,** with the beam in the camera tube at the transmitting station. The spot of light produced on the screen by the impact of the electron beam, traces out the beam motion so that all the points in a rectangular area are illuminated, one after the other.

The process of successive illumination of these points is so rapid that the effect on the eye is of simultaneous and uniform illumination over the entire rectangular area. Close examination of the picture tube screen reveals it to be illuminated by a series of parallel, adjacent, horizontal lines. The image is reproduced by varying the brilliance of the spot as it moves across the screen and these changes are obtained by applying the picture signal to the electron gun control grid.

As stated previously, the scanning movement of the picture tube electron beam is synchronized with that of the beam in the camera tube, therefore, the elements on the receiver screen have a brightness which is directly proportional to that of the corresponding elements of the scene at the transmitting studio. In this manner, the successive picture elements, and thus the entire image, are transmitted from the studio to the receiver screen.

THE PROBLEM OF SYNCHRONISM

To have the picture elements on the receiver screen maintain the same relative position as the corresponding elements on the camera tube image plate, it is necessary to synchronize the movement of the

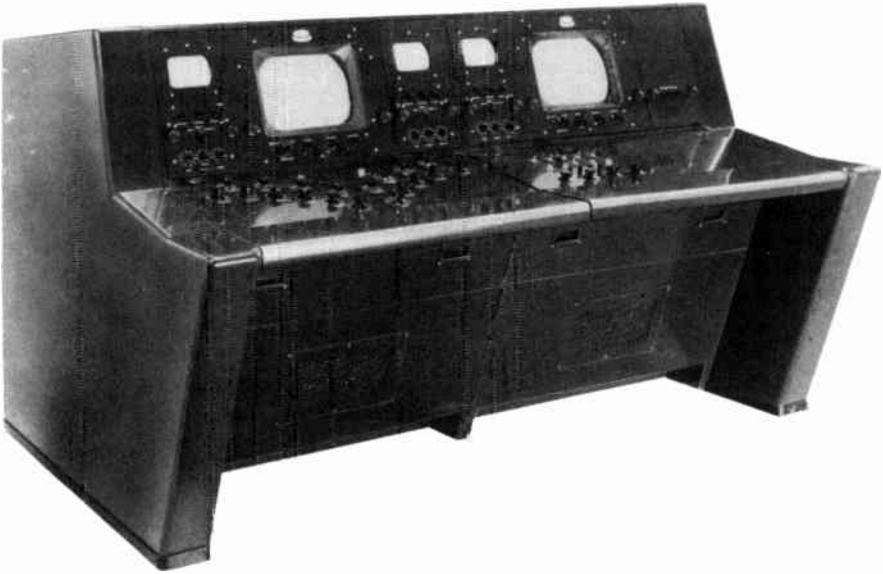

A monitor is provided for each camera being used on the program.

Courtesy Allen B. DuMont Labs. Inc.

beam in the picture and camera tubes. This is accomplished by means of special synchronizing signals or SYNCHRONIZING PULSES which are generated at the transmitter and control the frequencies of the circuits which generate the camera tube deflection voltages. Like the picture or video signals, these same pulses modulate the r-f wave. In the receiver, these pulses are separated from the picture signals to control the frequencies of those circuits which produce the receiver picture tube deflection voltages.

THE TELEVISION TRANSMITTER

To assist in the explanations of the various signals and their interrelationships in the complete television signal, a simplified block diagram of a television transmitter employing an image orthicon camera tube is shown in Figure 3. Actually there are two complete and separate transmitters—one for the picture and synchronizing signals, and one for the sound signals. Thus, the complete television signal includes two r-f waves, one amplitude modulated by the video and synchronizing pulse signals, and the other frequency modulated by the accompanying audio signals.

SYNCHRONIZING PULSE GENERATOR

As previously explained, the synchronizing pulses generated at the transmitter control the deflection of the electron beams in both the camera tube and the receiver picture tube. The SYNCHRONIZING SIGNAL GENERATOR shown at the center of Figure 3 is a very essential piece of equipment in the complete television system. It is the fundamental timing unit and produces all the required pulses with their correct shapes and in proper relationship with each other. From the synchronizing generator, sync pulses are applied to the camera sweep generator and also to the control amplifier where they are mixed with the video signals.

IMAGE ORTHICON CAMERA

The most important element of a television camera is the camera tube that converts the optical image into an electric signal voltage. The tube employed in the camera of Figure 3 is an IMAGE ORTHICON. An optical lens system at the front of the camera housing focuses an image of the scene to be transmitted on a light-sensitive plate in the camera tube. The signal voltage is taken from a signal plate and applied to the camera pre-amp.

Camera Pre-amp

Located in the camera housing, the CAMERA PRE-AMP raises the picture signal to a level that will insure a satisfactory signal strength at the control amplifier end of the camera cable. Because the image orthicon output is in the order of several millivolts, a very high gain amplifiers is not required, and any noise in the amplifier output will be due mainly to random noise in the camera tube electron beam and not to the pre-amp input.

Blanking Generator

Unless prevented, electron beam scanning of the image orthicon electric charge pattern during the beam retrace intervals will neutralize the charges in its path and produce dark lines in the picture information during the next forward sweep. This condition is prevented by applying to the camera tube negative pulses that are produced by the BLANKING GENERATOR. Thus, the blanking pulses become a part of the picture signal and are transmitted to the receiver where they are employed to cut off or blank out the picture tube electron beam during its retrace interval and thus prevent lines of bright light across the picture.

Sweep Generator

The systematic scanning of the charge pattern by the electron beam is accomplished by passing alternating currents of the proper wave shape and frequency through the deflection coils. The required currents are produced in the SWEEP GENERATOR which is located also in the camera housing. To maintain the proper frequency relations, the sweep generator frequencies are controlled by sync pulses from the synchronizing signal generator. Two additional outputs from the sweep generator circuits supply voltages to the blanking generator and the shading control circuit.

Shading Control

The Image Orthicon produces some undesired signals due to its method of operation and, if not compensated for, these signals add to those of the picture and produce false "shading" in the reproduced picture. To overcome this difficulty, an a-c voltage at horizontal frequency is fed from the sweep generator circuit to the pre-amp. By means of the SHADING CONTROL, the amplitude and polarity of the voltage may be varied until the undesired shading is removed.

CONTROL AMPLIFIER AND MONITORS

The CONTROL AMPLIFIER block, Figure 3, represents a group of circuits which accept the picture and blanking signal output from the camera pre-amp and the horizontal and vertical sync pulses from the synchronizing signal generator and mixes them to form what is called the **composite video signal.** The exact wave shape and arrangement of this signal will be described in a later lesson. After leaving the control amplifier it is amplified by the main video amplifier and then sent to the modulator circuit of the video transmitter. Thus, *the composite video signal consists of three distinct voltages, namely: (1) the picture signal, (2) the horizontal and vertical synchronizing pulses, and (3) the horizontal and vertical blanking pulses.*

The MONITOR is a cathode ray tube, with its associated circuits, that is generally located in the studio control room so that the program director and producer can see the picture being picked up by the camera. In a television station employing several cameras, there usually is a monitor for each camera, while another is used to monitor the picture being sent to the main video amplifier.

THE PICTURE TRANSMITTER

In carrier transmission, it is good practice to employ a carrier frequency which is at least ten times the value of the highest modulation frequency and with a value of 4 mc for the maximum modulation frequency, the carrier should

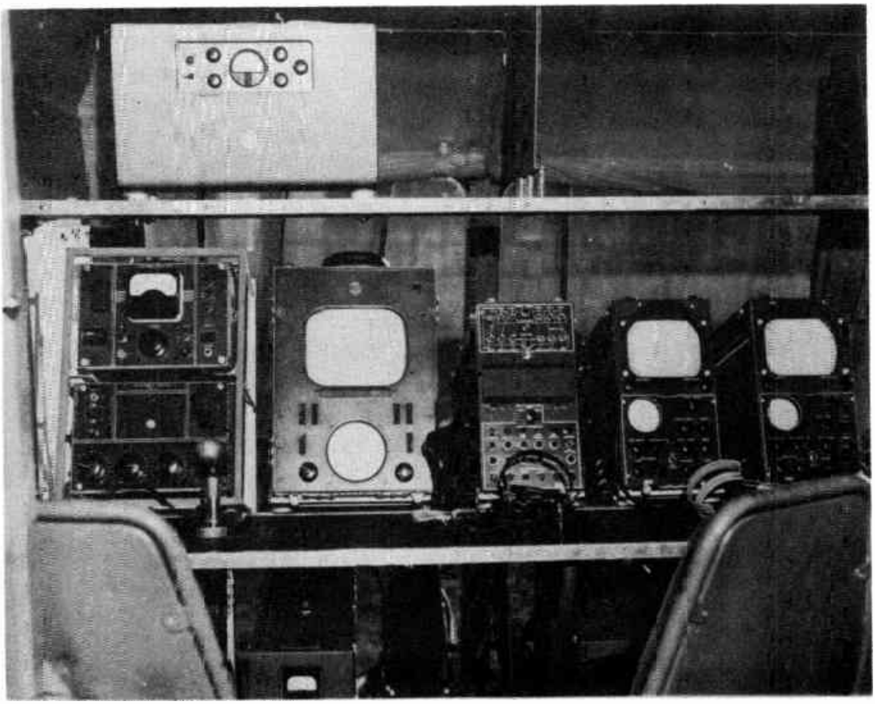

A mobile television transmitter. The transmitter equipment and monitors are shown mounted in a vehicle.

Courtesy Radio Corporation of America

be at least 40 mc. Actually, the lowest frequency assigned by the F.C.C. for television transmission is 54 mc. These frequency requirements necessitate special design of transmission equipment but, other than this, the methods employed in video transmission are about the same as those employed in AM radio broadcasting. The r-f generator produces the high frequency wave which is coupled to the modulated r-f amplifier where it is modulated by the composite video signal from the modulator stage.

To conserve space in the television frequency spectrum and thus allow more stations, the major portion of the lower sideband is removed by a vestigal sideband filter before the signal is radiated by the antenna. As explained in an earlier lesson on amplitude modulation, this is preferred to single sideband transmission since it reduces the phase distortion. Otherwise, a badly smeared picture results.

A modern television receiver like the one above is basically a radio receiver with cathode ray tube and pulse circuits added.

Courtesy The Hallicrafters Co.

THE SOUND TRANSMITTER

The sound transmission system is like that used in commercial FM radio broadcasting stations. Often the microphone is mounted on a boom and held out of camera view over the heads of the persons being televised in the studio. The pre-amplifier is located as close to the microphone as is practicable for the same reason as that of the camera pre-amplifier, to obtain a high signal-to-noise ratio. The signal is carried by transmission line from the pre-amplifier to the main audio amplifier where its level is amplified to a value which enables it to frequency modulate the r-f carrier of the transmitter.

In Figure 3, all of the sections of the sound transmitter have been grouped into the one "FM Transmitter" block, the output of which is carried by a transmission line to the antenna to be radiated into space.

THE TELEVISION RECEIVER

A simplified block diagram of a television receiver is shown in Figure 4, and as a number of the blocks represent several tube stages, it can be seen that the television receiver is a more involved arrangement of electric equipment than the ordinary broadcast radio receiver. Both the sound and picture carriers are accepted by the input circuits, and then separated and sent to their respective i-f channels.

The sound channel output transducer is a speaker while the picture channel terminates with a picture tube. At the output of the video frequency (v-f) amplifier, the synchronizing signals are separated and used to control the frequency of the deflection voltage generators. Though not included in the diagram, two power supplies are employed in the television receiver. One supplies high voltage for the anodes of the picture tube electron gun and the other low voltage for the plates and screens of the other tubes.

R-F SECTION

Both the sound and picture carriers are accepted by a single antenna and brought by transmission line to the receiver input. This block, the "R-F TUNER", represents the antenna coupling circuits, the station selector controls, and any r-f amplifier stages that the receiver may employ.

For any one television program all of the r-f tuner circuits must have a bandpass broad enough to include both the picture and sound carriers plus their respective sideband frequencies. The bandwidth for the regular commercial black-and-white television channels is 6 mc, a channel about six times as wide as the entire radio AM broadcast band, therefore, the television receiver input circuits must provide for extremely broad tuning.

The station selector controls usually consist of a switch or some similar arrangement to enable the receiver to be tuned from channel to channel. The r-f amplifier stage increases the receiver sensitivity which, among other things, improves the very important signal-to-noise ratio.

Having the same function here as it does in the standard broadcast types of superheterodyne receivers, the h-f oscillator generates a radio frequency signal which is heterodyned with the received carriers to produce audio and video modulated intermediate frequencies. Also, as in the broadcast radio receivers, whenever a new station is selected, the oscillator circuits are varied by the same control which changes the input circuits. Another control varies the oscillator frequency over a limited range in each of its channel settings to compensate for any changes due to oscillator drift. When this control is on the front panel, it often is called the "fine tuning."

The outputs of the R-F TUNER and H-F OSCILLATOR are coupled into the input of the "mixer" stage where, heterodyning with each other, they cause a number of frequencies to be produced. Two of these resultant frequencies, with their sidebands, are employed as intermediate frequencies. These are (1) the picture or video i-f, equal to the difference between the video carrier and h-f oscillator frequencies, and (2) the sound i-f, equal to the difference between the sound carrier and the h-f oscillator frequencies. Usually, the sound i-f is separated from the picture or video i-f at the mixer output in **dual-channel receivers.**

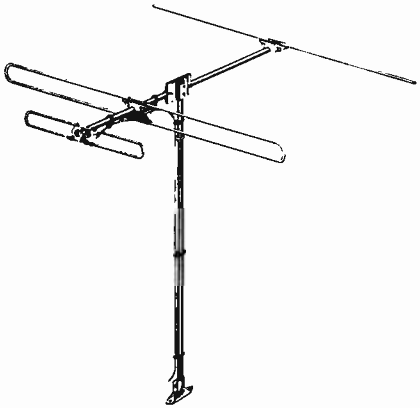

To receive the television transmission an antenna like this, or similar type, is needed with every receiver.

Courtesy The Ward Products Corp.

PICTURE CHANNEL

The tuned circuits of the television receiver picture or VIDEO I-F STAGES are designed to pass a frequency band 2½ to 4 megacycles in width. The actual bandwidth employed depends upon the type of receiver. That is, in general, the larger, more costly models contain the more broadly tuned coupling circuits, permitting better picture quality to be obtained. Because of the wide band of frequencies which must receive uniform amplification in the picture i-f section, the gain per stage is relatively low, on the order of from ten to twenty times.

As amplitude modulation is used for the picture signals, the second detector of the television receiver picture channel is of the usual diode type employed in AM receivers. However, as in television receivers, the values of the circuit components, the placement of these components and the wiring are different and of much greater importance than in the detector stage of a broadcast receiver.

The VIDEO FREQUENCY AMPLIFIER corresponds to a radio receiver a-f amplifier, its purpose being to increase the amplitude of the second detector output to the level needed to control the intensity of the cathode ray of the picture tube. In addition, the v-f amplifier must also pass the wide range of modulation frequencies that are employed.

PICTURE TUBE CONTROL CIRCUITS

In order to cause the electron beam in the receiver picture tube to sweep over the screen in the manner described in the section on "image reproduction," deflection voltages or currents of the proper shape and frequency are produced by the horizontal and vertical deflection circuits.

The complete video signal from the amplifier output is coupled also to the sync pulse separator circuits, the function of which is to separate the synchronizing pulses from the picture and blanking pulse portion of the wave and then separate the vertical from the horizontal sync pulses. The respective sync pulses are then employed to control the frequencies of the vertical and horizontal deflection voltage generators.

Thus, the picture tube electron beam moves from side to side on the screen many times, tracing out hundreds of horizontal lines, for each trip from the top to the bottom of the screen, always in step with the electron beam in the transmitter camera tube. In present day systems, the deflection frequencies are chosen so that for each complete picture, a total of 525 horizontal lines are employed.

SOUND CHANNEL

The receiver sound channel consists of the blocks labeled SOUND I-F AMPLIFIER, DETECTOR, A-F AMPLIFIER, and SPEAKER. The circuits of the sound channel correspond essentially to those of the common FM broadcast receiver. The i-f amplifier and detector coupling circuits are designed to pass the relatively wide band of the frequency modulated sound i-f signals. The a-f amplifier increases the amplitude of the detector output to the value required to operate the speaker.

The block diagram of Figure 4 is extremely important and should be studied thoroughly because, although individual television receiver circuits vary in detail, once the functions of the blocks in this diagram are understood, it will not be difficult to follow the circuits of any standard television receiver.

INTERCARRIER TYPE RECEIVER

An important variation of the basic arrangement of Figure 4 is that of the **intercarrier type receiver,** the connections of which are shown by the block diagram of Figure 5. In this type of receiver circuit, the entire video channel from the mixer output to the v-f amplifier has a bandpass

A modern television receiver employing a large screen in the floor model type designed for home entertainment.

Courtesy Sentinel Radio Corp.

of approximately 4.5 mc. As usual, two i-f signals are produced in the mixer stage, both of which are amplified by several stages in the sound and picture i-f amplifier. In the VIDEO DETECTOR, the two i-f carriers heterodyne to produce a beat note of 4.5 mc which carries both the sound and video modulation. This beat note is blocked from the picture tube, but is amplified by an additional i-f stage tuned to a center frequency of 4.5 mc and usually operated as a limiter. In the audio channel, an FM detector, generally of the ratio type, detects the a-f signals which then are amplified and applied to the loudspeaker.

One important advantage of the intercarrier system is that the proper reception of sound signals is practically independent of the stability of the receiver local oscillator. Generated at the transmitter, the picture and sound r-f carriers are always 4.5 mc apart, and therefore, the difference between the corresponding i-f's produced in the receiver mixer stage is always 4.5 mc, regardless of local oscillator variations. Therefore, the center frequency applied to the sound detector always is 4.5 mc, whereas, in a receiver of the type shown in Figure 4, excessive drift of the local oscillator frequency may cause the sound i-f to drift so far from the detector balance point that the reproduced sound may become distorted or even lost entirely.

A review of the explanation in this lesson will emphasize the fact that cathode ray tubes, and the pulse circuits which are needed to control them, are the very heart of modern television. At the transmitter, an optical image is converted into electric pulses by a camera tube and its associated pulse circuits. In the receiver, the image is reproduced by means of a large cathode ray tube and more pulse circuits.

Consequently before going further with television in general, the following few lessons will give detailed explanations of cathode ray tubes, pulse circuits, and the power supplies used with them.

* * *

IMPORTANT DEFINITIONS

COMPOSITE VIDEO SIGNAL—The combined signal made up of picture intelligence, horizontal and vertical sync. pulses, and blanking pulses.

DUAL-CHANNEL RECEIVER—A receiver in which separate sound and video i-f amplifiers are employed.

INTERCARRIER RECEIVER—A receiver in which the sound signal receives some of its amplification in the v-f section of the unit.

PERSISTENCE OF VISION—The ability of the eye to retain an image of an object after it has been removed.

SCANNING—[SKAN ning]—The process of examining the picture elements in a definite sequence.

SEQUENTIAL—[si KWEN sh'l]—The process of transmitting the elements of a picture in rapid succession rather than simultaneously.

SYNCHRONISM—[SING kruh niz'm]—The process of maintaining the respective picture elements at the receiver picture tube in step with those at the transmitter camera.

STUDENT NOTES

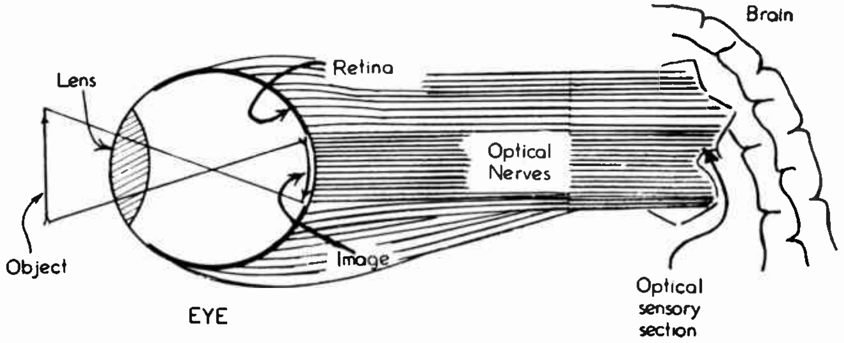

FIGURE 1

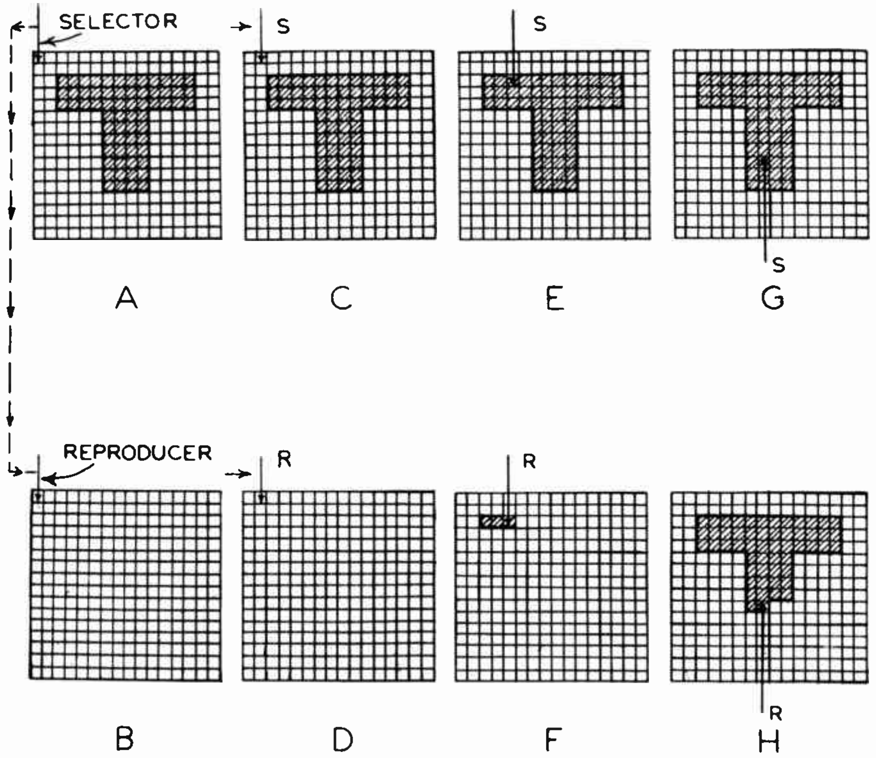

FIGURE 2

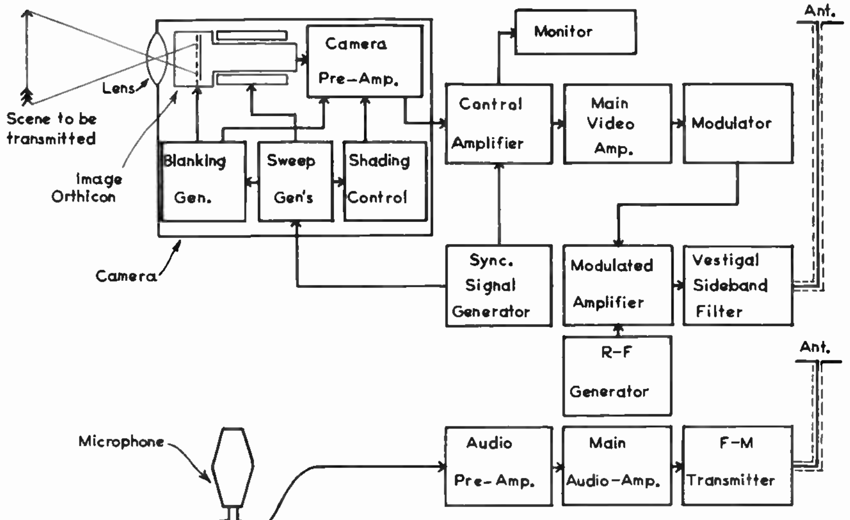

FIGURE 3

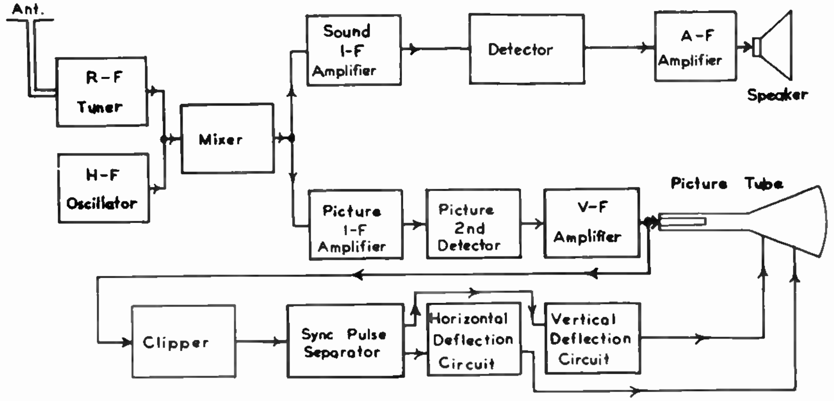

FIGURE 4

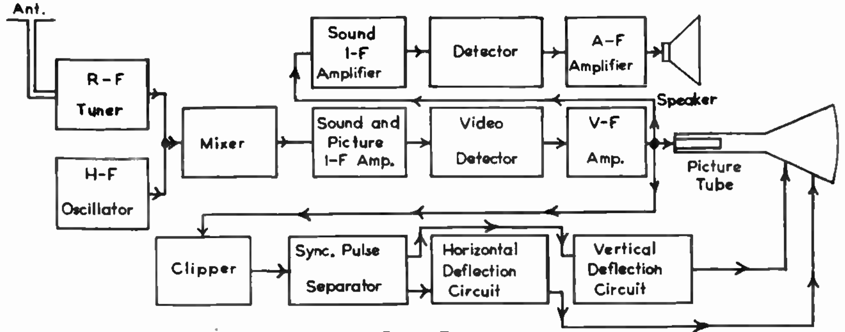

FIGURE 5

QUESTIONS

Modern Television—Lesson TPC-1T

11

How many advance Lessons have you now on hand?..........

Print or use Rubber Stamp.

Name.. Student No..........................

Street.................................Zone.................. Grade..........................

City.................................State.................. Instructor..........................

Write your answers on the "Ans." line below each question. If more space is needed use reverse side of this page.

1. What factor is most important in visual perception of a scene?

Ans...

2. What name can be given to the smallest units into which a picture can be divided?

Ans...

3. In present day television, what is the standard method of scanning?

Ans...

4. What feature of the human eye makes possible the sequential method of television?

Ans...

5. In megacycles per second, what is the frequency of a linear scanning system which provides a transmission rate of 150,000 elements in 1/30 of a second?

Ans...

6. What is the purpose of the synchronizing pulses generated at the transmitter?

Ans...

7. What is the purpose of the blanking pulse?

Ans...

8. In a complete video signal, what three distinct voltages modulate the television r-f wave?

Ans...

9. Why is most of the lower sideband removed from the television signal before it is radiated from the transmitting antenna?

Ans...

10. What is an important advantage of intercarrier type television receivers?

Ans...

FROM OUR *President's* NOTEBOOK

ADVICE

Time and experience have taught me one very important thing about giving Advice—volunteered or asked for; and that is to side-step all opportunities for mixing in with other folks affairs.

I've found one can't win. If your counsel happens to be good, and is acted upon, the asker will very likely take all the credit. On the other hand, good or bad, any failure will be charged up to your advice.

When friends present a personal problem to you, you usually get with it a detailed outline of the solution that they themselves have figured out.

Your wisest course then, is to do what they expect you to do—Praise them for their "great wisdom" and save yourself the penalties that go with finding fault with a course that someone has already decided upon.

One rarely loses a friend by applauding his actions or judgment.

Yours for success,

E. B. DeVry

PRESIDENT

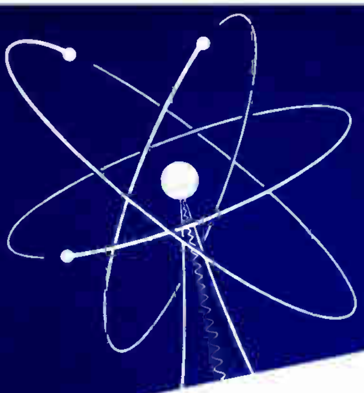

CATHODE RAY TUBES

Lesson TPC-2

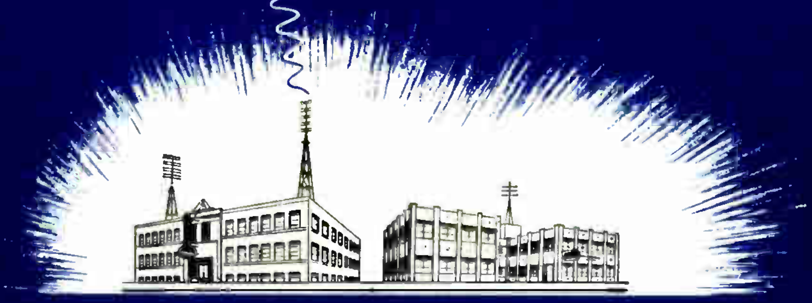

DE FOREST'S TRAINING, INC.
2533 N. Ashland Ave., Chicago 14, Illinois
Affiliated with DeVRY TECHNICAL INSTITUTE

TPC-2

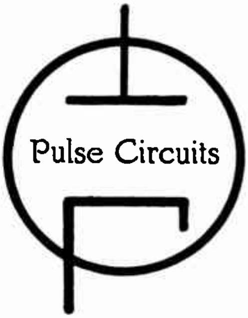

CATHODE RAY TUBES

DE FOREST'S TRAINING, INC.
2533 N. Ashland Ave., Chicago 14, Illinois
Affiliated with De VRY TECHNICAL INSTITUTE

Television chassis come off this assembly line at the rate of one-a-minute.
Courtesy Crosley Division, Avco Mfg. Corp.

Pulse Circuits

CATHODE RAY TUBES

Contents

> **Knowledge is of two kinds; we know a subject ourselves, or we know where we can find information upon it.**
>
> **—Samuel Johnson**

CATHODE RAY TUBES

The principles described in this lesson are important not only due to the wide use of cathode ray tubes in every portion of the electronic industry, but also because the same basic principles of particle acceleration, deflection, and focus are found in many other applications.

To name but a few, these techniques are used in memory tubes for electron calculators, high speed switches for multiplex communications, the optical system of electron microscopes, the mass spectrographs found in modern research laboratories, and the accelerators such as the cyclotron, betatron, and bevatron used in nuclear research.

The modern cathode ray tube (CRT) is one of the important instruments employed in electronics. In radio and television it is used extensively to check the operating characteristics of low and high frequency receiver and transmitter circuits in addition to its use as the "picture" tube in television. By means of other conversion units which change mechanical vibration, sound, heat, and light into electric variations, a vast number of industrial operations can be checked by the cathode ray tube.

In its basic operation the cathode ray tube may be regarded as a vacuum tube voltmeter, in which a beam of electrons produces a spot of light at the point it strikes a fluorescent screen. The position of the beam, and therefore, the spot of light produced by it when it strikes the fluorescent screen, is controlled by the voltage under observation. The spot of light provides an indication and measurement of voltage instead of a pointer moving across a calibrated scale, as in the case of the conventional type voltmeter.

Under certain conditions the light spot can be moved in two directions at right angles to each other and, if these movements are at the proper relative speeds, the actual wave shape of the observed voltage variations may be traced on the screen of the cathode ray tube. When used in this manner the tube is called an oscilloscope. The electrons in the electron beam, or cathode ray as it is sometimes called, have negligible mass and inertia. Therefore, the beam response is almost instantaneous and it is possible to observe extremely rapid variations. This feature makes the oscilloscope of exceptional value in the analysis of electron circuit operations.

As a voltage operated instrument, the cathode ray tube absorbs negligible power from the circuit under test, and therefore does not disturb appreciably the normal operating conditions. Also, by means of amplifiers, the sensitivity of the oscilloscope may be increased to provide satisfactory observation of extremely small voltage fluctuations.

By the use of suitable circuits, the electron beam of the cathode ray tube may be used to trace a wide variety of patterns on the screen. Some of these patterns are used to check the modulation of transmitters, to identify unknown frequencies, to determine the phase relationships between voltages and currents, and to indicate a balanced or null condition in various bridge circuit applications, to name but a few.

When the cathode ray tube is used as a picture tube for television purposes, the electron beam is moved from side to side and from top to bottom to scan the screen and trace out hundreds of horizontal lines. In addition, the intensity of the beam is varied to produce varying degrees of light and together with synchronized scanning it reproduces the picture viewed by the camera at the transmitter.

CONSTRUCTION OF CATHODE RAY TUBES

The cathode ray tube consists essentially of five major parts: (1) the glass envelope, (2) the tube base, (3) the electron gun assembly, (4) the deflection system, and (5) the fluorescent screen.

The glass envelope, often called the bulb, serves as a housing and support for the electron gun, deflection plate assembly, and fluorescent screen. It also maintains the necessary vacuum. The tube base, which is similar to that of the conventional glass type of receiving tubes, provides the means for connecting the external circuits to the various electrodes within the envelope.

A modern television tube with a 17 inch rectangular screen. Note that this tube has a metal cone to reduce the weight.

Courtesy RCA

The ELECTRON GUN furnishes the electrons, directs them toward the screen, focuses them into a narrow beam, and then accelerates them so they strike the screen with sufficient speed to cause fluorescence of the screen material.

The deflection system causes the electron beam to move up, down, or sidewise so that a light pattern representing the voltage variations may be traced on the screen. Cathode ray tubes employ either electrostatic or electromagnetic deflection. In the electrostatic method, deflection is accomplished by means of two pairs of plates, whereas in the electromagnetic method two pairs of coils are used.

The FLUORESCENT SCREEN provides the means for visual observation of the electron beam movement, and its relative intensity. It is formed by coating the inner surface at the large end of the envelope with a chemical substance that emits light whenever struck by an electron beam.

ELECTROSTATIC DEFLECTION TUBES

Cathode ray tubes employed in oscilloscopes and in the small television receivers use **electrostatic deflection** focusing and are constructed along the lines illustrated in Figure 1. As indicated, leads from all the various electrodes are brought out through the base.

Electron Gun

Referring to the sectional view of Figure 1, the **electron gun** consists of an indirectly heated cathode, a control grid, a second grid called the preaccelerating electrode, a first anode, and a second anode. The control grid and the preaccelerating electrode often are termed Grid No. 1 and Grid No. 2, respectively.

As with other types of electron tubes, the cathode ray tube control grid is biased negatively with respect to the cathode; however, the only opening in the grid disc exists at its center. Attracted by the highly positive preaccelerating electrode, the electrons emitted from the cathode are drawn through the hole in the grid and move toward the screen end of the tube. As the electrons move through the preaccelerating electrode, many of them are stopped by the flat, circular plates or discs positioned in this electrode and only those electrons which are very close to the axis of the tube pass on through the holes in the electrode discs.

Accelerated to a high velocity, the electrons pass through the first anode, through the opening in the disc of the second anode; and, after passing between the vertical and horizontal deflection plates, continue on to strike the screen of the tube. Thus, because of the small apertures in the discs of the various electrodes, only a very thin stream of electrons reaches the screen where they produce a small dot of light.

Focus

Although the apertures in the gun electrodes provide a beam of small diameter, a **focus** system is necessary to further decrease the beam diameter. The electrostatic focusing method is illustrated in

Figure 2A. Typical operating potentials for the gun electrodes for a certain type tube are 2,000 volts on the first anode and 6,000 volts on the second anode, with the preaccelerating electrode internally connected to and operated at the same potential as the second anode. As in normal tube operation, the control grid is operated negatively with respect to the cathode. In order to simplify explanations, no external connections to the various electrodes are shown.

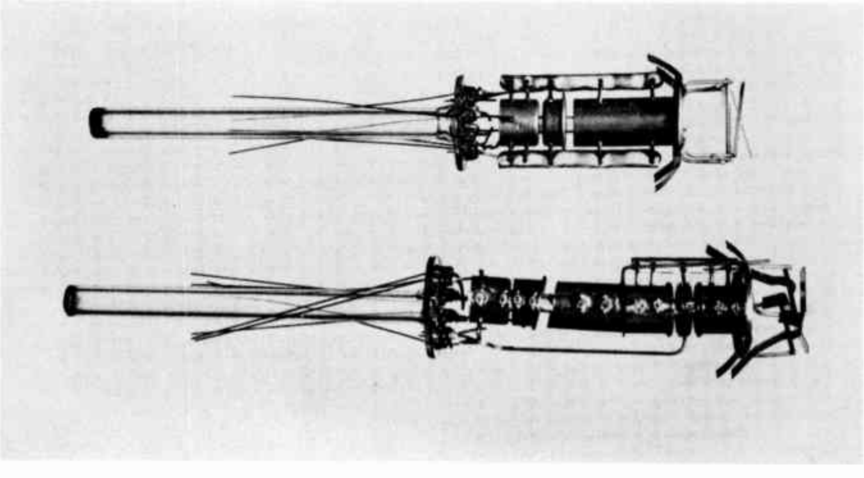

The straight gun (shown at top) is used in electrostatic deflected tubes or tubes with aluminized screens. The bent gun is used in electromagnetic tubes and a beam bender is required.

Courtesy General Electric Co.

Because of the great differences between the respective voltages of the various adjacent electrodes, strong electrostatic fields exist in the regions between them. The general shapes of these fields are indicated by the curved lines in the sectional drawing of Figure 2A. Each of these curved lines is called an "equipotential contour," and may be defined as an imaginary line in an electrostatic field, every point of which has the same potential as every other point. It is convenient to imagine the existence of these lines when studying the principles of cathode ray focusing.

Starting at the left of Figure 2A, paths of electrons emitted from the cathode cross the equipotential contour lines approximately at right angles. As all points along a given contour line are at the same potential, there is no potential difference to move the electrons along these lines. In fact, the electrostatic field causes the electrons to move at right angles to the equipotential contours. Thus, any electrons which are travelling along the axis of the tube continue to do so, while those which are slightly divergent are turned back toward the axis so that the electrons reach the screen at the FOCAL POINT. As shown by the short dashed lines, some of the emitted electrons follow paths which are not along the axis of the tube. While the effect of the electrostatic fields causes most of the divergent electrons to converge on the axis, a few are too divergent, and therefore, are removed from the beam and collected by either Grid No. 2 or the second anode.

Electrostatic focusing can be compared to the focusing of a beam of light by a glass lens. As indicated in Figure 2A, the electrostatic field existing in the region between Grid No. 1 and Grid No. 2 is called the 1ST ELECTRON LENS, while the region centered about the first anode is called the 2ND ELECTRON LENS. The first electron lens converges the electrons to a small point called the CROSS-OVER, and the electron image of the cross-over is focused at the focal point on the screen by the second electron lens.

The position of the focal point may be shifted along the tube axis by adjusting the voltage applied to the 1st anode, which, in turn, changes the shape of the second electron lens. Therefore, with respect to the cathode, the correct potential on the first anode is that which locates the focal point of the electron stream exactly at the screen.

Deflection

The drawing of Figure 2B represents a front view of the horizontal deflection plates. Assume the electron beam is directed at right angles to the surface of the page, and the beam passes between the plates. At a given instant, when the left plate is positive with respect to the right plate, an electron between the plates deviates in the direction shown by the short arrows. This action is a result of a fundamental principle that like charges repel and unlike charges attract.

As indicated in Figure 2B, the applied potential is an alternating voltage and momentarily causes the plate on the left to become alternately positive and then negative with respect to the one on the right. When the polarity of the plates is opposite to that indicated in the Figure, the electron beam is deflected to the right. Because the applied voltage is alternating, the spot continually moves from side to side on the screen of the tube.

Likewise, with a similar voltage applied to the vertical deflection plates of a cathode ray tube, the beam is moved up and down. Thus, the combined effect of the two pairs of deflection plates, like those shown in Figure 1, can cause the spot to scan the entire screen area.

ELECTROMAGNETIC DEFLECTION TUBES

Figure 3 illustrates the structure of the cathode ray tube which employs **electromagnetic deflection.** This arrangement provides an electron gun, ion trap magnets, a focus coil, and a deflection yoke. As indicated, both the inside and outside walls near the large end of the glass envelope are coated with a conductive material known commercially as **aquadag.**

The internal conductive coating is connected electrically to the anode by means of metal supporting springs. A high voltage is applied to this coating and the anode by means of the anode terminal, pictured in the upper center of the envelope. Generally the external conductive coating is grounded to the receiver chassis and with the glass of the tube wall serving as the dielectric, the two conductive coatings form a capacitor which often is employed as the output filter for the anode voltage supply.

Electron Gun

As shown in Figure 3, the electron gun consists of the indirectly heated cathode, the control grid (Grid No. 1), accelerating grid (Grid No. 2), and the anode. The heated cathode provides electrons and the control grid regulates the number which reach the screen. The accelerating grid increases the velocity of the beam electrons and prevents interaction of the electrostatic fields of the control grid and the anode. Together with the internal conductive coating, the anode serves to further increase the velocity of the electrons of the beam. The internal coating serves as an extension of the anode so that the electrons of the beam travel to the screen through a uniform field.

Unless preventive arrangements are made in electromagnetic deflection type tubes, a defect known as an ION SPOT appears as a permanent dark area in the center of the screen. This spot results from bombardment of the screen by negative ions, which are emitted by the cathode along with the useful electrons. Attracted by the anode potential, the ions form a beam and are focused in the same manner as the electrons. Since the ions are very heavy compared to the electrons, they strike with sufficient force to damage the screen and shorten the life of the tube.

To prevent the formation of an ion spot, **ion trap** type electron guns have been devised. One such arrangement is illustrated in Figure 3. Here, ion trap magnets are employed in conjunction with the electric field focusing effect of the oblique angle gap between the accelerating grid and the anode. The trapping action is made possible because the electrons are quite easily deflected by either a magnetic or electric field, while the relatively heavy ions are affected considerably less by a magnetic field than by an electric field.

Examples of single and double frame beam benders. Sometimes these are erroneously called "ion traps."

Courtesy Perfection Electric Co.

The shape of each of the ion trap magnets is somewhat like a horseshoe magnet. Arranged as shown, one pole of each ion magnet is observed, whereas each corresponding pole is positioned on the opposite side of the tube neck. Assuming that each observed ion trap magnet is a North pole, the magnetic lines of force extend from the pole piece, through the tube neck, and gun, to the corresponding South pole piece on the far side.

Thus, when passing through the field of the first magnet, the electron beam is bent downward slightly, as shown by the solid line, while the ions, shown in dashed lines, continue in a straight path until deflected upward by the electric field existing in the diagonal gap between the accelerating grid and anode. This same electric field also deflects the electrons upward, but the field of the second magnet bends them back so their path is parallel to the axis of the tube. However, the magnet has little effect on the ions, and they continue on their deflected path until finally trapped by the anode.

In the BENT-GUN type of ion trap illustrated in Figure 4, a single magnet is employed along with an electron gun in which the axis of the cathode and grids is inclined toward the wall of the tube. The gun end of the anode is "bent" with its axis in line with the gun elements, as shown. The principle of operation is the same as the method of Figure 3, but with the gun arrangement of Figure 4, the initial path of both electrons and ions is at an angle to the tube axis.

Passing through the field of the ion trap magnet, the electron beam is bent so as to coincide with the tube axis but the ions, very slightly affected by this field, continue as a beam along the path of the dashed lines until trapped by the anode. Although it is popular to use permanent magnets as illustrated in Figures 3 and 4, the same action can be obtained by an electromagnet which consists of a coil or coils carrying direct current.

Focus

Electromagnetic focusing of an electron beam is illustrated in the simplified diagram of Figure 5. As indicated by the solid line, electrons traveling along the axis of the tube are not affected by the flux lines of the focus coil, but any divergent electrons, as shown by the dashed line, cut across the magnetic flux lines. The resultant reaction between the magnetic fields of the electrons and focus coil field cause the divergent electrons to be turned back towards the axis and arrive at the focal point on the screen.

This action is shown in greater detail by the drawing of Figure 6 which represents a cross section of the neck of the tube inside the focus coil. The large dot in the center represents the beam of electrons which is assumed to be moving straight up out of the paper, while the small dots represent the flux lines of the focus coil.

Electrons moving along a path parallel to the axis of the tube are not affected by the magnetic field because they do not cut the flux lines. Without the focus coil any divergent electrons would finally strike the side of the tube as indicated by path No. (1). However, the flux lines of the focus coil combine with the magnetic field about the moving electron so that the total or resultant field is strengthened on one side of the electron stream and weakened on the other.

In accordance with the left-hand rule for electron flow, the direction of the magnetic field about the divergent electrons is indicated by the small curved arrow drawn around the line which represents path No. (1). With the focus coil flux lines assumed to be in a direction up out of the page, the resultant magnetic field will be weaker above the divergent electrons and stronger below. Thus, like a conductor, the electrons will be pushed toward the weaker field region, as indicated by the small arrow "F," and tend to follow path No. (2).

If the flux lines of the focus coil are increased, the electron path curvature is increased also, and as shown by path No. (3), the electrons curve around and return to the axis of the tube. A further increase of the flux lines causes the electrons to travel in a smaller circle as shown by path No. (4).

At the same time the circular motion takes place, all the electrons move from the gun toward the screen of the tube. Therefore, divergent electrons follow paths which actually are spiral in shape. The direct current in the focusing coil, and therefore the number of flux lines, is adjusted so that, in their spiral paths, the divergent electrons cross the tube axis at the instant they reach the screen. When focused properly, both the divergent and axis electrons strike the screen at the focal point, to form a spot of small diameter.

The focus coil can be replaced with a permanent magnet. In this case focus adjustment is accomplished by varying an air gap in the magnetic circuit.

Some tubes designed for electromagnetic deflection utilize electrostatic focus. These tubes employ an electron gun which combines the ion trap and electromagnetic deflection of Figure 3 with the electrostatic focus features of Figure 1. By careful design, many of these tubes have optimum focus when the focusing voltage is zero or very near zero. Since neither focusing voltage or current is required for satisfactory operation, they are often referred to as SELF-FOCUS TUBES.

Deflection

Electromagnetic deflection employs a "deflection yoke" consisting of two pairs of coils placed around the neck of the cathode ray tube in the position indicated in Figure 3. To provide greater detail, the drawing of Figure 7 shows how the pairs of vertical and horizontal coils are positioned. One pair of coils serves to deflect the beam in a horizontal direction while the other pair moves the beam vertically.

The small circle in the center of the drawing represents any one or all of the electrons which travel from the electron gun toward the screen, or out of the drawing. Thus, according to the left hand rule, the magnetic lines of force around the electron are in a clockwise direction as indicated by the two small circular arrows.

Still referring to Figure 7, each pair of deflection coils is connected in series across a separate source of alternating current. At the instant the current in the vertical coils is in a direction to cause flux lines from left to right, as shown, the electron and coil flux lines are in the same direction above and in opposite directions below the electron. Thus, the resultant flux above the electron is strong while that below is weak, and the electron is deflected downward as indicated.

During the following alternation of the a-c cycle, the flux lines of the vertical coils reverse direction, while those of the electron do not change. Therefore, the flux above the electron is weakened while that below is strengthened, and the electron is deflected upward.

A similar action, produced by the resultant flux of the horizontal deflection coils and the electron, causes deflection in the horizontal direction. Therefore, two pairs of deflection coils, arranged as in Figure 7 with alternating currents of proper frequencies in them, deflect the electron beam so that it scans the entire screen surface.

PROJECTION TYPE TUBES

To meet the demand for larger television images, cathode ray tubes are available with screen diameters up to about 24, 27 and 30 inches. For still larger images, it is customary to employ a projection system in which the image on the face of a special type of picture tube is enlarged optically and projected on the viewing screen. An example of a **projection tube** is the type 5TP4, the general construction of which is shown in the cross section drawing of Figure 8.

The electron gun structure is about like that of the tube of Figure 1, except in the 5TP4, grid No. 2 is not connected electrically to anode No. 2. This projection tube has both internal and external conductive coatings similar to the types represented by Figure 3, and the second anode also is connected electrically to the inner coating by means of a spring support.

By varying the current in the focus coil, the electron beam is focused at the desired point. The air gap in the metal shield concentrates the external magnetic field at that point.

Courtesy Standard Transformer Corp.

Although the external coating is conductive around the neck of the tube, near the flare of the envelope an external insulating coating, indicated by the dashed lines in Figure 8, extends very nearly to the widest diameter of the tube. Then, near the edge of the flared envelope, a conductive coating in the form of a band connects to anode No. 2 by a recessed cap arrangement.

A round CRT mounted in brackets which also hold the deflection yoke and focus coil. An electromagnetic beam bender is shown mounted near the base of the tube.

Courtesy Philco Corp.

Because the internal anode No. 2 coating is at high potential, and is in contact with the glass neck of the tube, the glass surface may acquire this same potential. Under these conditions there is danger of a brush discharge through the air between the neck and the deflection yoke. If these discharges are allowed to take place, possible damage to the yoke insulation or breakdown of the glass can occur.

To prevent damage to the tube and deflection yoke, the external neck coating is connected to ground by means of clamps and a suitable length of connector. When the coating is grounded, it acts as an electrostatic shield. Also, the external band coating around the rim of the tube envelope prevents brush discharge when the face of the tube is supported by a metal holder, which in turn, is insulated from ground. The external insulating coating prevents condensation of water vapor into a conductive film over the glass surface. Such a moisture film would produce erratic surface sparking.

In the 5TP4 projection tube, the electron beam is focused electrostatically and deflected electromagnetically. That is, the electric fields between the gun electrodes focus the beam as explained for Figure 2A, while the combined magnetic fields of the deflection yoke deflect the beam as explained for Figure 7.

In order to provide sufficient brightness for use in projection type receivers, the 5TP4 tube employs the metal (aluminum) backed type screen which will be explained later in this lesson. A relatively high second anode voltage is required to accelerate the electrons of the beam to a very high velocity so that they strike the screen with sufficient force to produce a high intensity light. A bright picture source is necessary because, in optical projection, the light from the small face of the tube must be distributed over the relatively large area of the receiver picture screen.

SCHEMATIC SYMBOLS

In the cross-sectional views of Figures 1, 3, 4, and 8, the connecting leads of the various internal electrodes extend through the base of the tubes. Although none are shown in these Figures, cathode ray tube bases are similar to those of the common types of receiving tubes but usually provide greater insulation and accommodate a larger number of pins. Corresponding to those used for common radio tubes, the RTMA numbered basing diagrams of Figure 9 show the external connections to the internal electrodes of cathode ray picture tubes.

To simplify the symbols, the various grids and anodes are all indicated as grids and placed above the cathode in the order the beam passes through or to them. In many types, the second anode terminal is located in the glass envelope as illustrated in Figures 3 and 8 and shown as a "top cap" in symbols 12C and 12D of Figure 9.

For example, the cross section of Figure 1 shows ten wires extending through the base. With base 14G of Figure 9 on this tube, the heater connects to pins 1 and

14, the cathode to pin 2, grid No. 1 to pin 3, grid No. 2 consisting of the preaccelerating electrode and second anode to pin 9, and the first anode to pin 5. The vertical deflection plates, closest to the second anode, connect to pins 7 and 8 while the horizontal plates connect to pins 10 and 11.

Used in some projection applications, the type 3NP4 cathode ray tube requires a special five pin base with the connections indicated by symbol 3NP4 of Figure 9.

Known as a "duodecal" base, 12C and 12D of Figure 9 have twelve pins equally spaced on a 1$\frac{1}{16}$" diameter circle. As shown, several pins may be omitted while others may be present but unconnected. Standardized for most 10" and larger cathode ray tubes, 12D often is referred to as a 7 pin duodecal base.

Illustrated in Figure 9 by 14G, another cathode ray tube base contains fourteen pins equally spaced on a 1¾" diameter circle and is known as a "Diheptal" base. Again, some pins may be omitted while others have no connection made to them.

THE LUMINESCENT SCREEN

The conversion of the electric signals into changes of light intensity which form the reproduced image is accomplished by the cathode ray tube screen made of tiny crystals of specially synthesized luminescent materials which have the property of converting electron energy into light.

The term **luminescence** is defined as the act of absorbing energy and then emitting light without the luminescent material becoming hot enough for incandescence. Luminescence is subclassified according to the type of exciting energy such as: photoluminescence and chemiluminescence. Thus, in the cathode ray tube, where the energy of bombarding electrons is applied, the action is known as cathodoluminescence.

Luminescence during excitation and within about one ten-millionth of a second after excitation ceases is called **fluorescence,** while the continuous emission of light for longer intervals than fluorescence is called **phosphorescence.** Except with substances in the gaseous stage, both fluorescence and phosphorescence always occur together, and therefore, the complete action is best described by the more general term luminescence.

Although the first of the luminescent materials, called "phosphors," was discovered by accident in 1603, the first phosphor suitable for use in cathode ray tubes was not discovered until 1830. This material emitted light which had a greenish color and was suitable for oscilloscope use but unsatisfactory to the television viewer. Now many synthetic phosphors are produced in the laboratory, and practically all present television cathode ray tube screens consist of mixtures of two or more of these materials chosen so that the combined emission characteristics provide white light.

Theory of Phosphor Luminescence

Although no one theory has yet been formulated to explain all of the properties ascribed to phosphors, the following general explanation covers many of the phenomena which have been observed.

All atoms are considered to consist of a nucleus surrounded by a system of electrons that rotate in "shells" of definite "energy levels," which are designated as K, L, M, N, etc. To be absorbed by an atom, impinging energy in the form of light or moving electrons must cause these shell electrons to leave their normal paths and move into shells of higher energy. This added energy causes the atom to change from its normal to an "excited" state. Since this is an unstable condition, the atom returns to its normal state and the surplus energy is emitted in the form of light.

The material used for the screens of cathode ray tubes has a crystalline structure. That is, the atoms or ions are located at definite points in a symmetrical geometric lattice arrangement somewhat as illustrated in Figure 10. This diagram represents the crystal structure of alpha-zinc sulfide known as wurtzite, the white circles indicating the atoms of sulphur, the black dots the zinc atoms and the connecting lines the paths of mutual attraction between the respective atoms of the two elements.

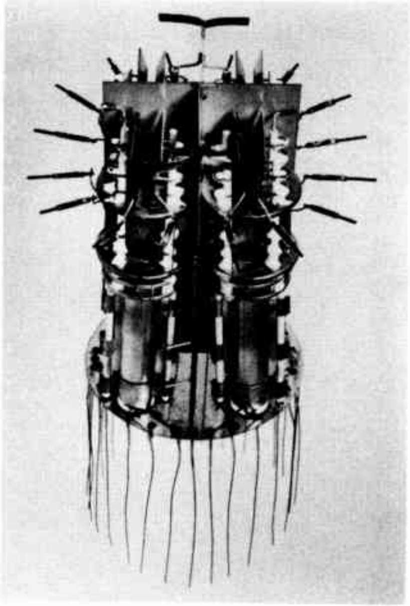

In special application as many as four electron guns may be mounted in a single tube.

Courtesy Electronic Tube Corp.

The distance between atoms or ions is about one ten-millionth of a centimeter, but in an impure crystal there may be atoms of a foreign substance in between the normal lattice points, or at normal lattice points that are empty. Besides atoms of foreign substances, defects of the crystals themselves may exist in the form of local concentrations or absences of the atoms of the base material. It is thought that luminescence is due to any or all of these variations.

With the close crystal arrangement, electrons may move not only from one energy level to another, but from one atom or ion to another. Thus, in phosphors, the normal electron processes of absorption and emission of energy may become very complex and difficult to interpret. With the absorption of energy, electron shifts occur throughout the crystal, but it is believed that luminescence is due only to the electron shifts in the defect points.

The impurity material, usually added to these phosphors during manufacture, is called the ACTIVATOR and the points in the crystal lattice where its atoms or ions occur are known as fluorescent or active centers. When the crystal is excited, the displaced electrons of the activator atoms travel through the crystal for a considerable distance from their origin and eventually return to their own, or more probably to other active centers at which points their energy is transformed into luminescent emission.

As these active centers are distributed throughout the lattice structure or crystal atoms in a concentration of about one to a thousand, it is difficult for the liberated electrons to find their way back to the activator ion. Furthermore, electrons may be delayed or "trapped" near activator centers and in crystal faults. A certain amount of thermal agitation is required to reliberate the trapped electrons and permit them to wander to another trapping location or to a fluorescent center where they can cause light emission.

Because of this delay action, luminescence is produced for a short while after as well as during the time of crystal excitation. As stated, luminescence which occurs more than one ten-millionth of a second after excitation ceases is called phosphorescence. The phosphorescence of larger crystals last longer than that of smaller crystals because free electrons have an opportunity to wander farther in the more extended lattices.

Screen Phosphors

The only types of phosphors used for cathode ray tube screens are the sulfides, silicates, and tungstates. A very small quantity of activator or impurity material is added to the extremely purified base ingredients and then the mixture is crystallized.

For purposes of identification, cathode ray tube screen phosphors have been given the RTMA designations of P1, P2, P3, P4, P5, P6, P7, P10, P11, and P14. Having a fluorescent color of green, phosphor P1 consists of zinc silicate with manganese as an activator and has a medium phosphorescence of from .03 to .05 second. This phosphor is employed in oscilloscope and radar cathode ray tube screens. Phosphor P2 consists of copper activated zinc sulfide, has a blue-green fluorescent color, a relatively long phosphorescent time and is used where it is necessary that the oscilloscope screen hold transient phenomena for comparison with previous effects. The P3 phosphor is made of zinc beryllium silicate and activated with manganese, has a yellow fluorescent color, a medium phosphorescence and is used primarily in cathode ray tubes designed for oscilloscope applications.

At present, the P4 screen is used in all American television picture tubes and consists of the ingredients of the P3 phosphor plus zinc sulfide activated with silver. The P4 phosphor has a white fluorescent color and a phosphorescence of about .005 second. P5 phosphor consists of calcium tungstate, and P11 phosphor of zinc sulfide with silver as an activator. Both phosphors have blue fluorescent color, very short persistence of 5 and 10 microseconds respectively, and are used in photographic recording of high speed phenomena.

The P6 phosphor consists of zinc sulfide and zinc cadmium sulfide with silver as an activator, has a white fluorescent color and a persistence of .0005 second. This phosphor is most popular for television use in Europe, and for closed circuit color television in the United States. As used for the screen material in radar equipment, the P7 screen consists of a mixture of silver activated zinc sulfide, which has a medium phosphorescence, and copper activated zinc cadmium sulfide with a long phosphorescence. Also used for radar the P10 and P14 phosphors have purple and orange colors respectively.

The deflection yoke contains both vertical and horizontal deflection coils shaped to fit around the neck of the CRT.

Courtesy Standard Transformer Corp.

Although it is beyond the scope of these explanations to offer complete details, there are a number of methods of applying the phosphor material to the cathode ray tube glass envelope. These are known as: (1) spraying, (2) dusting, (3) settling, (4) flowing on, and (5) electrostatic deposition. Each method offers advantages and disadvantages which depend upon the size of the envelope and screen, the type of screen, desired thickness of the screen, number of envelopes to be screened at a time, etc.

IMAGE CONTRAST

In the reproduction of a discernible image on the screen of a cathode ray tube **contrast** is one of the most important factors. Contrast may be defined as the difference in brightness between any two points or areas on the screen, while the ratio of two brightness values is called the CONTRAST RATIO. Considering these relations of brightness, contrast ratio may be divided into two categories: (1) the RANGE CONTRAST, which is a measure of the contrast range reproducing ability of the tube, and (2) the DETAIL CONTRAST, which is a measure of the contrast in the fine detail of the image. The detail contrast ratio determines the sharpness or clearness of the image, and therefore, it is considered to be the more important of the two.

Actual measurements are made, usually in LAMBERTS, a unit of brightness equal to the emission of light from a uniform surface at the rate of 1 lumen per square centimeter. In turn, a LUMEN is a unit of light (luminous flux), equal to the illumination on a surface of unit area, all points of which are at a unit distance from a point source of one candle. To summarize these definitions, a cathode ray tube screen has a brightness of one lambert when each square centimeter of its surface emits the same amount of light as would be obtained from a standard candle at a distance of one centimeter.

Various factors which limit the obtainable contrast on a picture tube screen are: (1) halation, (2) normal reflections, (3) curvature of the screen, (4) envelope wall reflections, and (5) room illumination.

Halation is the spreading of light as a result of what is known as total reflection occurring at the glass air interfaces of the envelope wall. To illustrate the various actions, Figure 11 shows an amplified cross-section of a cathode ray tube screen and envelope wall with the scanning beam striking the luminescent coating at point x, from where light rays emanate in all directions.

The ray x-a passes through the glass to air interface at right angles to the envelope wall surfaces and therefore suffers no refraction and very little reflection. Passing through the interfaces at angles of less than 90° to the glass surfaces, rays x-b and x-b′ are reflected about the same amount as ray x-a, but are bent, or refracted, as shown. The amount of refraction increases as the angle between the surface and these incident rays decreases, until finally, rays c and c′ are bent back into the glass. This condition is termed "total reflection." Rays c and c′ return to the inside surface of the envelope wall and again reach the interface between the glass and luminescent coating near points y and y′.

The phosphor crystals do not touch the glass at every point of its surface, and the amount of glass surface in contact with the phosphor is called the percentage of **optical contact.** If the phosphor happens to be in contact with the glass at points y and y′, the light rays c and c′ will illuminate the phosphor. Reflected in the directions y-h and y′-h′, some of this light will emerge from the front of the tube screen, as shown.

Since y and y′ represent two points on the circumference of a circle centered at x, if a fairly high percentage of optical contact exists, an undesired circle of light will be produced around spot a. If the image at point h, for example is dark compared to that at point a, then the lighting of point y by the reflected ray c causes the element at h to be brighter than normal, and the contrast between it and element a is decreased.

If the phosphor is not in optical contact with points y and y′, then the interface is that of the glass wall and the vacuum inside of the envelope, and again the rays will be totally reflected. Under these conditions, light ray c will travel from y to point p instead of in the direction y-h. At point p total reflection again takes place, and so on along the envelope wall with light seen only at the points that the reflected ray touches the inter-surface of the glass with luminescent coating in optical contact. Since the unnatural lighting at y and y′ occurs only if optical contact exists at these points, a low percentage of optical contact minimizes halation.

The inside of a glass CRT is painted with a conducting material called "aquadag" to provide a path from the screen to B+.

Courtesy Sylvania Electric Corp.

A 7 inch projection tube designed for theater television. Note the envelope corrugation to prevent high voltage "arcs."

Courtesy RCA

Halation can limit the maximum contrast to a ratio as low as 6 to 1, and therefore it is the most important limiting factor. In a given tube, the amount of halation is determined by:

1. The index of refraction in the tube face.
2. The light transmission from the luminescent coating.
3. The percent of optical contact.
4. The light absorption of the tube face.
5. The thickness of the tube face.

The values of the first and second factors listed are fairly well fixed, and screen design is normally carried out in terms of optical contact, light absorption and tube face thickness.

Conventional sprayed screens have an optical contact of about 30% and produce lower image contrast than settled screens which ordinarily have an optical contact of about 20%. The optical contact of dusted screens may be as low as 15% thus permitting an even greater degree of contrast.

Strange as it may seem at first thought, halation can be reduced by the use of a light absorbing material in the tube face. The light rays, which enable the observer to see the image, pass through the tube face once in a nearly perpendicular direction with relatively little attenuation, while those rays due to halation pass through the absorbing layer at least two extra times and, therefore, are attenuated to a greater extent. The light absorbing medium may take the form of a thin layer of an absorbing substance on the surface of the tube face, or the face may be made of a darkened glass. These are referred to as "black" tubes.

Halation is affected by the thickness of the cathode ray tube face in two ways: (1) decreasing the thickness causes the halation circles or bands to form closer to the scanning spot, thus affecting a smaller area of the image and increasing the range-contrast ratio, (2) increasing the thickness increases the attenuation of the halation light rays and results in a higher detail-contrast ratio. In practice, relatively thick faces are used, producing a loss in range contrast, but a gain in the more important detail contrast.

In the explanations of Figure 11, it was mentioned that rays x-a, x-b and x-b′ provide a small amount of reflection. When this reflected light illuminates the dark regions of the luminescent screen, the contrast between them and the bright area is decreased. Called NORMAL REFLECTIONS this effect results in an even distribution of undesired screen illumination, and therefore it is distinguishable from halation, which, as mentioned, takes the form of a more or less well-defined ring of light around the scanning spot.

As with halation, a low percentage of optical contact serves to minimize normal reflections, though compared to halation, these reflections are of rather small importance, limiting the contrast ratio to only about 60 to 1. About three times as detrimental to image contrast are the similar reflections caused by the safety glass usually employed in front of the cathode ray tube.

The effect of curvature of the screen and bulb envelope reflections is shown in Figure 12. Here, point x represents a bright portion of the image and point y a dark portion. The light from point x scatters in all directions, some coming through the tube face in the direction x-a, and some going directly to point y as indicated by line 1, a path made possible by screen curvature. Also, light from point x travels to the envelope wall, to points m and n, for example, and is reflected to point y.

The light which reaches y by these various paths travels through the tube face in the direction y-b, so that the portion of the picture at y is not as dark as it should be. The brighter the light portions of the picture the greater this illumination of the dark areas, and thus the greater the reduction of contrast. The contrast ratio is

A cutaway view of a 10 inch picture tube. An aluminized screen placed on the inner face allows electrons to pass through but stops the ions. Therefore, a straight electron gun can be used as shown in the neck of the tube.

Courtesy North American Philips Co., Inc.

limited to approximately 70 to 1 by the effects of curvature of the screen, and to about 200 to 1 by envelope wall reflections.

Room illumination tends to light up the entire screen thereby making all the portions of the image brighter than they should be. Since the brightness difference produced in the bright parts of the picture is small compared to that of the dark portions, the contrast between them is decreased. The ratio varies considerably with conditions in any particular case. However, the effects of room illumination may be reduced by proper placement of the receiver with regard to windows, lighting fixtures, and other sources of illumination.

A notable development in cathode ray tube screen design is the application of a light reflecting metal layer on the inner or beam side of the luminescent screen. Consisting of a thin coating of aluminum, this layer permits the beam electrons to pass and strike the luminescent coating, but reflects the light forward. This action approximately doubles the tube light output and eliminates the effects of envelope wall reflections and curvature of the screen, resulting in an improvement of range contrast by a factor of three to ten times. However, as the arrangement does not prevent halation, the more important detail contrast is only slightly improved.

Examples of tubes employing the metal backed or **aluminized screen** are the types 10FP4 and 12KP4, and a comparison of aluminized and unaluminized screens, showing the difference in screen brightness, is given by the curves of Figure 13. For example, in a given tube, when the control grid drive is 35 volts, the brightness of an unaluminized screen is approximately .065 candles per square inch, whereas for aluminized screen with the same control grid drive, the brightness is .22 candles per square inch. The curves of Figure 13 then illustrate the relative increase in the brightness of an aluminized screen.

Another advantage of the aluminized screen is the fact that while the aluminum coating allows the passage of electrons, it is thick enough to trap ions, thus eliminating the need for the ion trap in the electron gun.

* * *

IMPORTANT DEFINITIONS

ALUMINIZED SCREEN—|a LOO: min ighzd skreen|—A fluorescent screen of a cathode ray tube which is backed by a thin coating of aluminum on the electron beam side of the screen.

AQUADAG—|ah kwa DAG|—A conductive coating, usually of graphite, deposited on the inside and outside of some cathode ray tubes.

CONTRAST—|KAHN trast|—The degree of difference between the lightest and darkest areas of the image produced on the cathode ray tube screen.

ELECTROMAGNETIC DEFLECTION—The deflection of the electron beam in a cathode ray tube caused by the interaction of the magnetic field of the moving electrons with the magnetic fields of two pairs of coils.

ELECTRON GUN—The elements of a cathode ray tube assembled in the neck of the tube consisting of an electron-emitting cathode and control electrodes that accelerate and focus the beam so as to produce a spot of light of the desired size and intensity on the fluorescent screen.

ELECTROSTATIC DEFLECTION—The deflection of an electron beam in a cathode ray tube caused by the interaction of electrostatic field of the electrons with the electrostatic fields of two pairs of charged metallic plates.

FLUORESCENCE—|floo: uh RES 'ns|—The emission of light by a substance only during excitation caused by the impact of electrons on the substance.

FOCUS—The point on the fluorescent screen of a cathode ray tube at which the cathode rays converge to form an image when acted upon by the focusing arrangement.

HALATION—|huh LAY sh'n|—The spreading of light on the face of the cathode ray tube as a result of total reflections between the walls of the glass envelope.

IMPORTANT DEFINITIONS (Cont'd)

ION TRAP—An arrangement in the electron gun of a picture tube which traps negative ions and prevents them from reaching the screen.

LUMINESCENCE—[loo: mi NES 'ns]—The emission of light by a substance due to the absorption of energy, such as that of a cathode ray beam. The light produced in this manner is not the result of heating the substance to incandescence.

OPTICAL CONTACT—The extent of contact between the phosphor crystals and the glass surface of the cathode ray tube screen.

PHOSPHORESCENCE—[fahs fuh RES 'ns]—The emission of light by a substance which persists for a short time after the impact of electrons in the substance.

PROJECTION TUBE—A cathode ray tube designed to produce a very bright but small image that can be projected onto a large screen by an optical system consisting of lenses and mirrors.

STUDENT NOTES

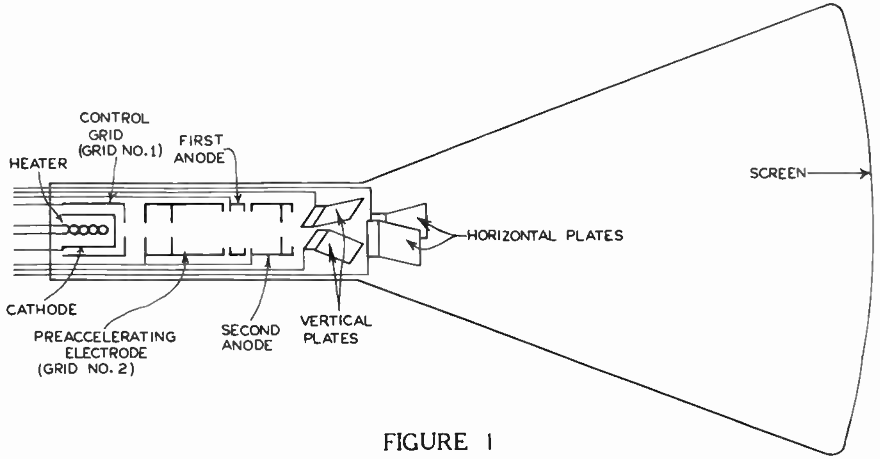

FIGURE 1

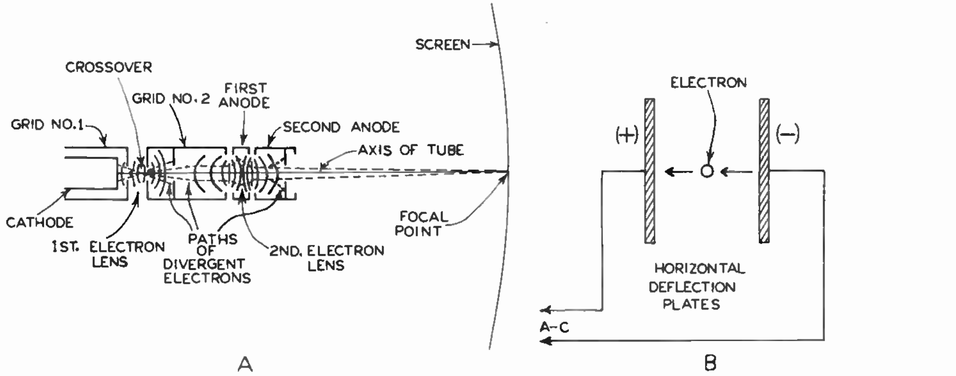

FIGURE 2

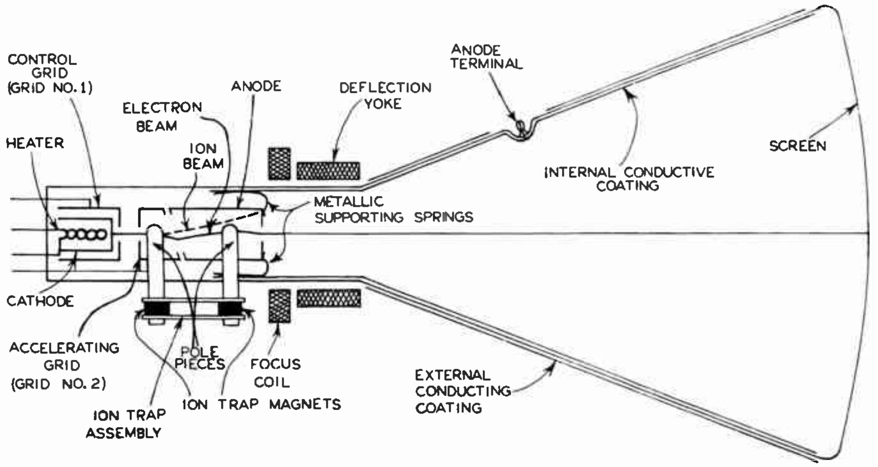

FIGURE 3

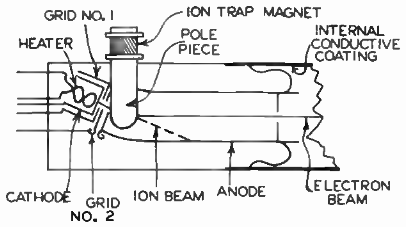

FIGURE 4

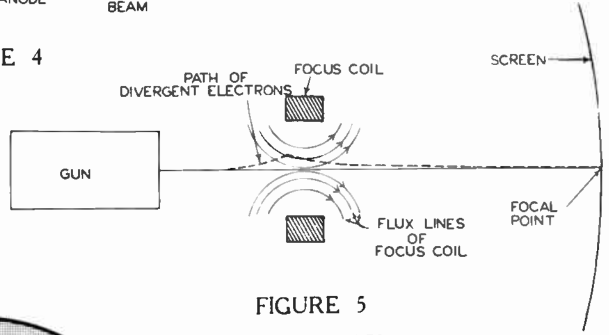

FIGURE 5

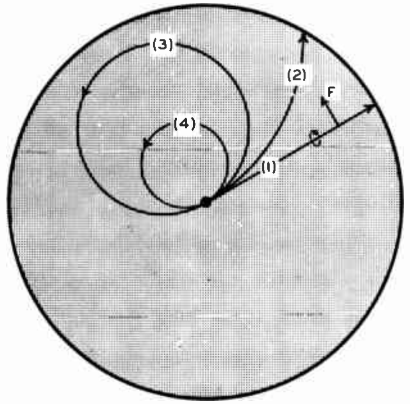

FIGURE 6

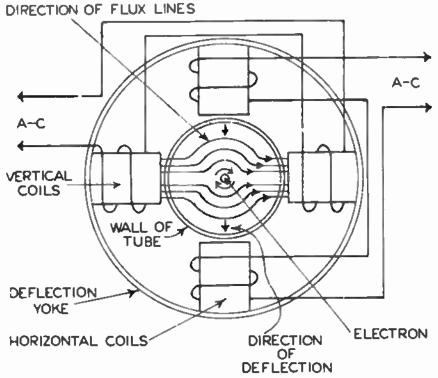

FIGURE 7

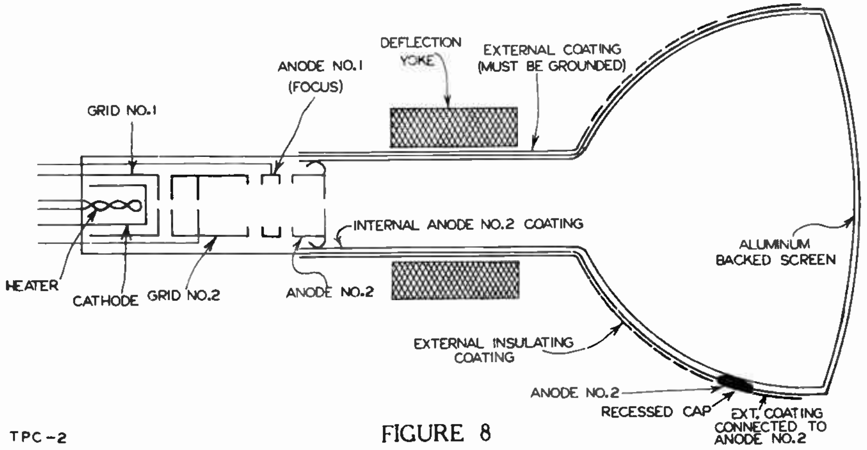

FIGURE 8

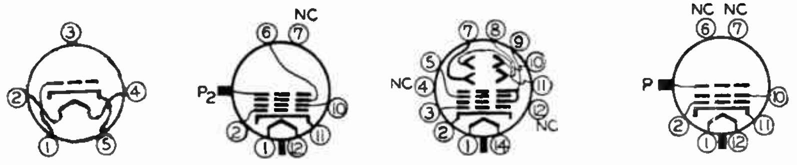

3NP4 12C 14G 12D

FIGURE 9

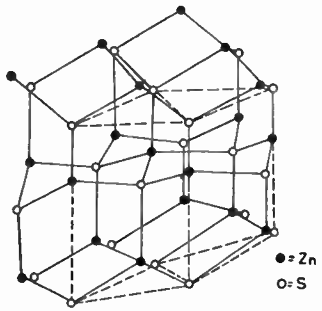

FIGURE 10

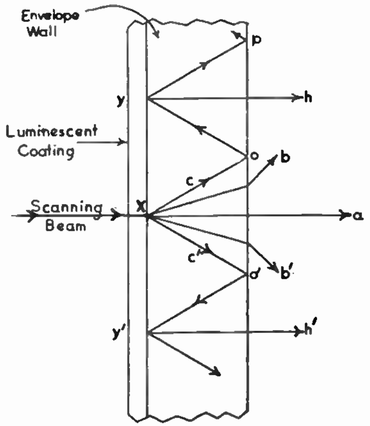

FIGURE 11

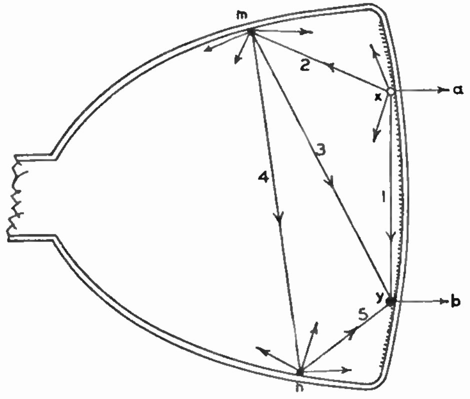

FIGURE 12

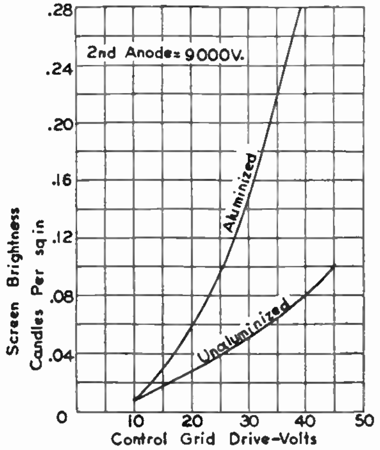

FIGURE 13

Cut along this line and send in for grading

DE FOREST'S TRAINING, INC.

SPECIALIZED SCIENTIFIC AND PRACTICAL INSTRUCTION

2533 NORTH ASHLAND AVENUE CHICAGO 14, ILLINOIS

QUESTIONS

Cathode Ray Tubes—Lesson TPC-2

11

How many advance Lessons have you now on hand?............................

Print or use Rubber Stamp.

Name .... Student No. ....

Street .... Zone .... Grade ....

City .... State .... Instructor ....

Write your answers on the "Ans." line below each question. If more space is needed use reverse side of this page.

1. What is the purpose of the relatively small holes in the various electrode disks in a CRT gun like that of Figure 1?

Ans. ....

2. To what can electrostatic focusing be compared?

Ans. ....

3. In the CRT arrangement of Figure 3, what is the purpose of the internal conductive coating?

Ans. ....

4. What characteristic of an ion beam makes possible its separation from an electron beam?

Ans. ....

5. In electromagnetic deflection type cathode ray tube, what two construction methods can be employed to prevent formation of an ion spot on the tube screen?

Ans. ....

6. In electromagnetic focusing of an electron beam, what is the effect of the focus coil field on divergent electrons?

Ans. ....

7. In projection type cathode ray tubes, why is a bright image source necessary?

Ans. ....

8. How may image contrast be defined?

Ans. ....

9. What advantage is provided by a "black" cathode ray tube?

Ans. ....

10. How can the effects of room illumination on the CRT screen be reduced?

Ans. ....

FROM OUR *President's* NOTEBOOK

BRAGGING

It doesn't call for a great deal of smartness to figure out that when Mrs. MacSwizzle talks over-much of her "new maid" and of what a "jewel" she is, somebody is attempting to impress somebody else.

The chances are that the "maid" is a cleaning woman who comes in one day a week—maybe two—to sweep and dust and help with the ironing. But in the company of those who do have maids, Mrs. Mac doesn't propose to take a back seat. She's going to try, at least, to up-rate herself if her imagination and her conversational talents will do it.

Boasters and braggers fail to realize that in talking about themselves they succeed in creating an "effect" all right, but not the one they are out to create. People—all kinds of people—don't want to hear you talk about you. They want to hear you talk about themselves—and they'll help you at the drop of a question mark.

Yours for success,

E. B. DeVry

PRESIDENT

C-3

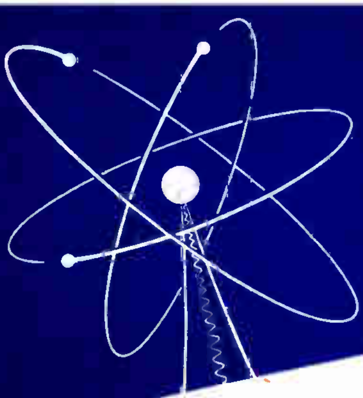

LOW VOLTAGE POWER SUPPLIES

Lesson TPC-3

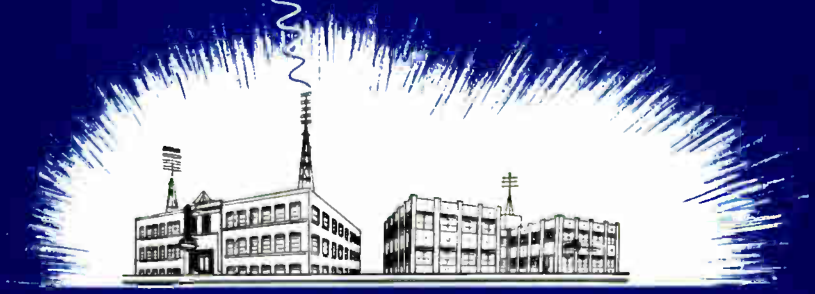

DE FOREST'S TRAINING, INC.

2533 N. Ashland Ave., Chicago 14, Illinois

Affiliated with DeVRY TECHNICAL INSTITUTE

TPC-3

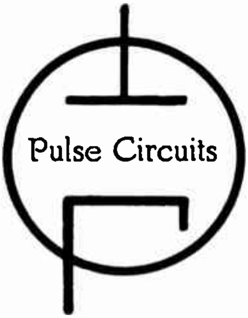

LOW VOLTAGE POWER SUPPLIES

DE FOREST'S TRAINING, INC.
2533 N. Ashland Ave., Chicago 14, Illinois
Affiliated with DeVRY TECHNICAL INSTITUTE

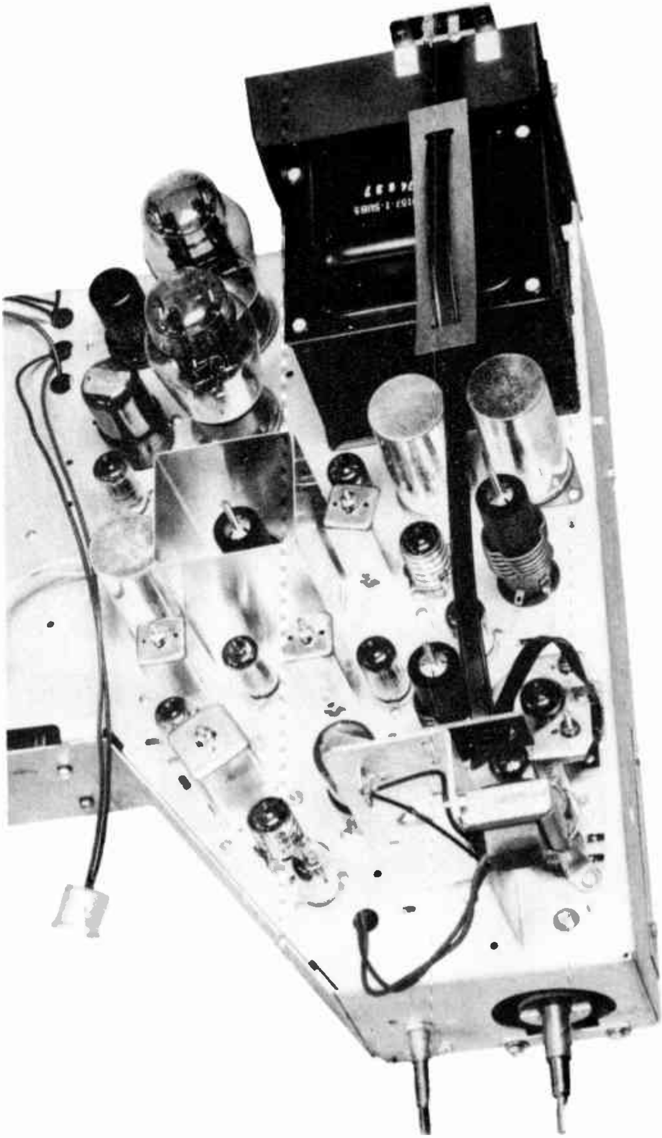

As shown in this partial view of a television receiver chassis, the power supply often is an integral part of the electronic equipment it is designed for. The two rectifier tubes are visible to the left of the transformer and two of the filter capacitors are mounted directly in front of the transformer.

Courtesy "Mars" Television Inc.

Pulse Circuits

LOW VOLTAGE POWER SUPPLIES

Contents

Away with delay; the chance for great fortune is short-lived.
—Silius Italicus

LOW VOLTAGE POWER SUPPLIES

The voltage requirements for television receivers, industrial control circuits, or nuclear measurement devices vary considerably. For example, the accelerating anode of cathode ray and picture tubes requires anywhere from 3 to 30 kilovolts, the deflection circuits require about 400 volts, and the signal circuits usually operate on 300 volts or less. In addition some units require negative voltages for control purposes. In similar manner, nuclear scalars and counters may require 900 volts or more for the counter tube whereas 100 to 300 volts suffices for the other circuits.

Those circuits that operate at high voltages usually require only a few hundred micro-amperes of current whereas most of the lower voltage circuits require several hundred milliamperes. Therefore, it is more feasible to use two or more power supplies to operate this equipment, and for identification purposes those designed to supply 1000 or more volts with but little current drain are called the **high voltage supply** and those designed to supply a few hundred volts of higher current capacity are called the **low voltage supply.**

Most modern high voltage-low current circuits are sufficiently different from the low voltage moderate current circuits to require separate explanations. Therefore, this lesson describes only the low voltage power supplies; the high voltage supplies are illustrated in a later lesson.

POWER TRANSFORMER SUPPLY

The circuits for a typical power transformer, low voltage type supply designed for multi-tube equipment such as a television receiver are shown in Figure 1. As is conventional, the filament voltage sources are included to give transformer T six secondary windings, five of which supply tube heater voltages.

The high voltage secondary winding has a total of five taps, one of which is used to connect its center point to ground, and the others connect to full wave rectifier tubes V_1 and V_2 to provide two independent supply circuits. The plates of tube V_2 connect to the outer ends of the winding while the filament, obtaining its current from a low voltage secondary, is connected to the output filter consisting of L_1, C_1, and C_2. The negative plates of the filter capacitors, are connected directly to ground in the usual way and +380 volts are available as the output at the positive plate of capacitor C_2. From the positive plate of input capacitor C_1, +400 volts are made available by a separate connection.

For this part of the supply, the complete conductive path may be traced from the filament of V_2 to either plate, to the corresponding half of the high voltage secondary winding, to its center tap and to ground. From ground, the path is through the plate circuits of the various tubes to the +380 volts terminal, and through the filter choke L_1 to the filament of V_2 or from the plate circuit of the tube requiring this voltage, the path is directly through the +400 v connection to the filament of V_2.

The plates of rectifier tube V_1 are connected to the remaining taps on the high voltage secondary winding while its filament, obtaining current from another low voltage secondary, is connected to the filter consisting of L_2, C_3, and C_4. Since there are fewer turns between the taps of the high voltage secondary to which the plates of V_1 are connected, the d-c voltage output of this part of the supply is reduced to +290 volts as shown.

In this section the direct current path is from the filament of tube V_1 to either plate through the corresponding section of the high voltage secondary to the center tap, and to ground. From ground, the path continues through the tube circuits back to the +290 volts terminal and through filter choke L_2 to the filament of the tube.

The rectified currents of both the V_1 and V_2 sections of the supply are carried by the center sections of the high voltage secondary winding, while only the current of the V_2 section is carried by the outer sections of this winding. Therefore, between the points at which the V_1 plates are connected, the wire of the winding must be sufficiently large to carry the total current of both sections.

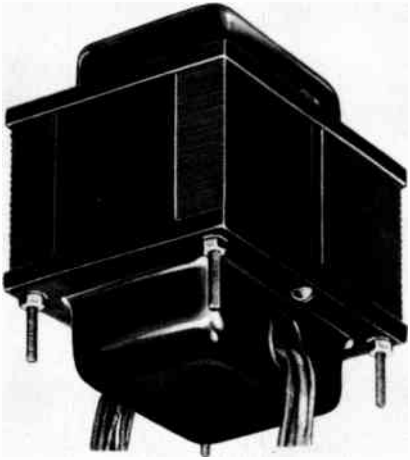

A power transformer of the type used in many television receivers and other electronic apparatus.
Courtesy Standard Transformer Corp.

The filaments of rectifiers V_1 and V_2 are connected to separate filament windings while the circuits of most of the remaining tube heaters are shown near the bottom of the diagram. Each of the seventeen heaters in this group operate at 6.3 volts but by connecting them in parallel-series across a 12.6 volt center-tapped winding as shown, the total heater current is reduced by approximately one half. For example, if each heater requires .3 ampere, all seventeen need 17×.3=5.1 amperes at 6.3 volts. Series connected in pairs across the entire secondary, 16 of the tubes require but 8×.3=2.4 amperes at 12.6 volts. The center tap connection carries only the current for the 17th heater plus any unbalance between the parallel groups.

To prevent 60 cycle power line modulation of the oscillator circuit output, its heater is supplied with direct current. As shown at the lower center of Figure 1, two selenium rectifiers, SR_1 and SR_2 are connected across the 12.6 volt transformer secondary to operate as a full wave rectifier. The circuit is completed from the junction between the rectifiers through resistor R_2 which, in conjunction with capacitor C_5 acts as a conventional low pass filter. Together with capacitors C_5 and C_6, choke L_3 acts as a high frequency filter to prevent the oscillator output from feeding back into the other circuits. The two secondaries, shown at the upper left of the diagram, supply power to heaters in tubes which require isolated circuits.

Compact electrolytic filter capacitors mounted in aluminum cans. This type capacitor is used extensively in TV power supplies.

Courtesy P. R. Mallory and Co.

DELAYED VOLTAGE POWER SUPPLY

Another typical example of a transformer type of low voltage power supply is shown in Figure 2. Again, the transformer high voltage secondary is tapped to provide two separate d-c supply sections, one of +400 volts and the other −100 volts. Here, the circuits of tubes V_1 and V_2 correspond to the single tube V_2 section of Figure 1. In Figure 2 tubes V_1 and V_2 are connected with their respective sections in parallel to provide twice the current capacity of one tube. The center tap of the high voltage winding is connected to ground and the filaments of V_1 and V_2 are connected through the contacts of relay M to the output filter consisting of C_1, C_2, and choke L. With respect to ground, the approximately +400 volts available at the output terminal of filter choke L is applied through various decoupling networks and circuit components to the proper electrodes of other tubes.

The common types of filter capacitors have a maximum rating of 450 working volts and, with 400 volts between the output terminal of choke L and ground, the safety factor is small. To provide protection in this respect, filter capacitors C_1 and C_2, each rated at 350 volts, are connected in series to provide the equivalent of a 700 volt capacitor, with half the capacitance of either one. When two capacitors are connected in series, the voltage across each is inversely proportional to its capacitance. Therefore, to insure equal capacitor voltages, resistors R_1 and R_2, having equal resistance, are connected as a voltage divider across these capacitors.

The circuits of rectifier tubes V_3 and V_4, Figure 2, correspond roughly to the V_1 section of Figure 1, but instead of the plates, the cathodes are connected to the center sections of the high voltage secondary winding. The plates, all in parallel, are connected to the output filter consisting of resistor R_3 and capacitors C_3 and C_4. This reversal of rectifier tube connections makes the ground side of this section positive and the insulated output terminal 100 volts negative.

In this section of the power supply, the rectifier tubes are conductive only during the secondary voltage alternations that the cathode is negative with respect to ground. Thus, as in most full wave rectifiers, tubes V_3 and V_4 are alternately conductive. During conduction, electrons travel from the cathode to the plates of either tube, through filter resistor R_3 to the "−100v" output terminal. From that point there can be a circuit to ground and the electron path continues to the center tap of the secondary and through either central section of the winding to the cathode of the conductive tube.

Other circuits are connected across the −100 v and +400 v for a total supply of 500 volts and for these, the return path of the electrons is through choke coil L, the contacts of relay M, filament to positive plate of tubes V_1 and V_2 to the outer end of the secondary and back through the winding to the negative cathode of V_3 or V_4.

Thus, the circuit of Figure 2 provides three d-c voltages: (1) 100 volts negative with respect to ground, (2) 400 volts positive with respect to ground, and (3) 500 volts between the +400 and −100 volt terminals.

Time Delay Circuit

The **time delay circuit,** consisting of tube V_5, relay M, and resistor R_4 of Figure 2, prevents high surge voltages across filter capacitors C_1 and C_2 in the 400 v supply circuit when the power is first turned on and the various tubes are not warmed up sufficiently to draw their normal load currents. When the circuits supplied are not in operation there is no current in the winding of relay M, and its contacts are open to disconnect the filaments of tubes V_1 and V_2 from the output filter components. When the primary circuit power switch, SW, is closed, the induced secondary voltages of the power transformer are applied to all the rectifier tubes. Since the contacts of relay M are open, the V_1 and V_2 output circuit is broken and no voltage is applied across filter condensers C_1 and C_2. However, the circuits of rectifiers V_3 and V_4 are complete, therefore filter capacitors C_3 and C_4 are charged to approximately 100 volts at the indicated polarity.

Triode V_5 is converted to a diode by connecting the control grid to the plate, which in turn, is connected through the winding of relay M to the grounded positive plates of filter capacitors C_3 and C_4. The cathode of V_5 connects directly to the negative plate of C_4 and through filter resistor R_3 to the negative plate of C_3. Thus, the voltage of the charged capacitors is applied across diode V_5 in the proper polarity to make it conductive.

The 10 ohm resistor R_4, connected in series with the heater, causes a delay of approximately 15 seconds before the tube reaches its proper operating temperature. At the end of this delay period, the tube becomes conductive and the resulting current, carried by coil M, causes the relay contacts to close and complete the output circuit of tube V_1 and V_2. By this time the other tubes in the load circuits are at proper operating temperature and draw their normal currents the instant the relay contacts close. With this normal current, excessively high voltages are not built up across the filter capacitors C_1 and C_2.

A MULTI-TRANSFORMER POWER SUPPLY

A third arrangement of the power transformer type of low voltage power supply is shown in Figure 3. It includes separate power transformers T_1, T_2, and T_3, and four rectifier tubes V_1, V_2, V_3, and V_4. Although used in a projection television receiver, it is typical of other elaborate equipment.

Tube V_1 operates as a full wave rectifier across the center tapped high voltage winding of power transformer T_1 and provides voltages for the receiver audio amplifier circuits only. The filament is connected to the filter consisting of capacitor C_1, choke L_1, and capacitor C_2 with the series bleeder resistors R_1, R_2, and R_3 across its output. Resistor R_3 is connected between ground and the center tap of the high voltage winding to provide a negative 25 volts to bias the control grids of the audio output tubes. The plate circuits of the audio output tubes are connected to the +380 volts terminal which connects to the positive plate of the input filter capacitor C_1 and through jumper "J" to filter choke L_1. This jumper is located in the speaker plug so that the high voltage cannot be applied to the plates of the output tubes unless the speaker is connected.

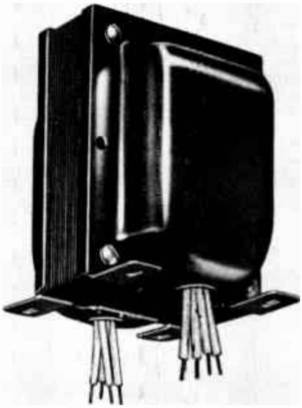

A plate and heater power transformer. The windings are completely enclosed to reduce the transfer of energy to other circuits by magnetic coupling.
Courtesy Standard Transformer Corp.

To provide for the relatively high voltage and current requirements of the horizontal deflection circuits, full wave rectifier tubes V_2 and V_3 are connected in parallel across the high voltage secondary winding of power transformer T_2. The filaments of these tubes are connected to the filter consisting of capacitors C_3 and C_4, choke L_2, and capacitors C_5 and C_6. As explained for C_1C_2 and R_1R_2 of Figure 2, there are voltage divider resistors across the series connected capacitors.

In this particular receiver, the high voltage supply is energized by the horizontal sweep circuits, therefore, to provide protection against high voltage shock, a safety or **interlock switch** is included in the 117 volt supply circuit. Referring to the lower part of Figure 3, "S_1" is the normal off-on power switch which, when closed, energizes the primary of transformer T_1. With S_1 closed, the primaries of transformers T_2 and T_3 are energized only when plug P_1 is inserted in its socket. In addition, plug P_2, connected in series with the primary of transformer T_2, is located on the safety cover of the high voltage supply.

Thus, when the safety cover is removed, plug P_2 is separated from its socket and this entire section of the power supply becomes inoperative. In a similar manner, if this section of the supply is removed, plug P_1 must be pulled out of its socket and again the circuits are inoperative.

The remaining positive and negative voltage requirements of the receiver are provided by the power supply consisting of full wave rectifier tube V_4, power transformer T_3, and filter $C_7L_3C_8$. Beginning at the +150 volt output terminal of this supply, the voltage divider consists of series connected resistors R_8, R_9, R_{13}, R_{12}, R_{11}, and R_{10}. The total output is 260 volts but, with the grounded junction between R_9 and R_{13} as a reference, the polarities and values of the available voltage are as indicated.

Also, as shown in Figure 3, each transformer has low voltage secondaries to supply current for the filaments of its rectifier and the heaters of certain tubes in the receiver circuits.

TRANSFORMERLESS POWER SUPPLIES

To reduce both weight and cost, many low voltage power supplies do not incorporate a power transformer. Instead, the line voltage is increased by connecting two or more half wave rectifiers to provide a "multiplied" d-c output voltage. This particular type of power supply system has been given various names such as VOLTAGE DOUBLER, VOLTAGE TRIPLER, and VOLTAGE MULTIPLIER, but actually, its d-c output is two, three or more times the a-c input only under conditions of very small load currents. For example, under actual operating conditions, the output of a voltage doubler system is normally somewhere between 1½ and 2 times the a-c input voltage.

FULL WAVE TYPE VOLTAGE DOUBLER

The action of the **voltage doubler** is explained first, because the higher order multiplier circuits are merely an extension of the doubler principle. There are two basic types of voltage doublers, namely, the half wave type and the full wave type. However, several variations of each are in common use.

Figure 4 shows the simplified diagram of a full wave voltage doubler power supply. Wire A of the 117 v a-c input connects to the cathode of V_2 and to the plate of V_1. Capacitors C_1 and C_2 are connected in series between the V_1 cathode and V_2 plate, while the junction between the capacitors is connected to wire B. Connected between the V_1 cathode and the junction of the V_2 plate and C_2, the filter consisting of choke L and capacitor C_3 removes the a-c ripple from the d-c output voltage, the negative side of which is grounded.

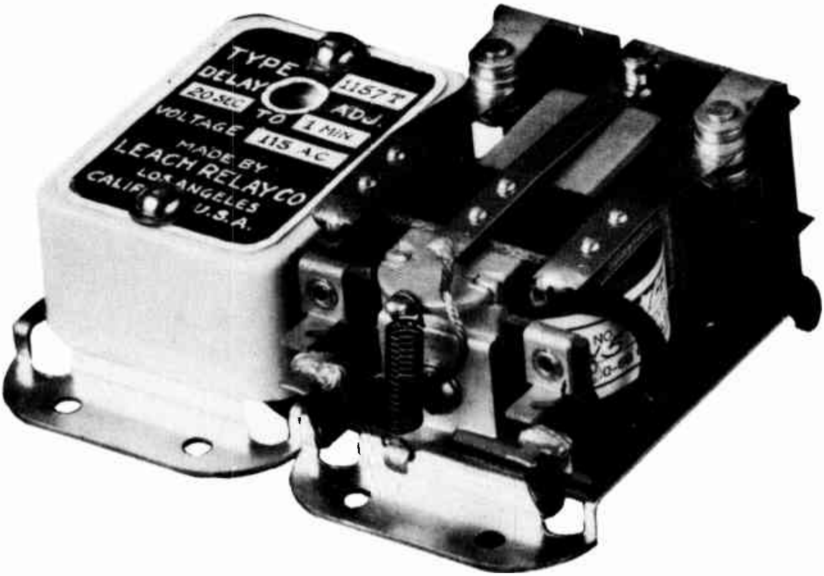

A time delay relay used in some power supplies allows the filaments to reach proper operating temperature before plate voltage is applied to the tubes.

Courtesy Leach Relay Co.

During the a-c line voltage alternation when A is positive with respect to B, the V_1 plate is positive with respect to the cathode and the tube is conductive. As indicated by the solidline arrows, from B, electrons flow to the C_1 lower plate which forces electrons from the other plate through V_1 to wire A. This action charges C_1 to the polarity shown and to a voltage, E, that is approximately equal to the a-c input voltage peak. During the time that A is positive, the V_2 cathode is positive with respect to its plate and the tube is nonconductive.

For the following a-c line voltage alternation, B is positive with respect to A, the V_1 cathode is positive with respect to its plate and the tube is cut off. However, with the positive side of the line connected to the C_1 negative plate, the C_1 charge and line voltage are series-aiding and their total is applied to the filter. Therefore, C_3 charges to a voltage equal to 2E, with electrons flowing from A through V_2 to the C_3 grounded plate, from the C_3 upper plate through L to the C_1 positive plate and from the C_1 negative plate to B.

At the same time, capacitor C_2, connected between the V_2 plate and B, charges to the polarity shown and to a value E, which is approximately equal to the peak value of the a-c input voltage. As indicated by the dotted line arrows, the electron flow is from A through V_2 to the C_2 lower plate and from the C_2 upper plate to B. At first glance it would appear that the C_3 charging current would discharge C_1, and it does slightly. However, after a few cycles, the C_3 charge reaches a value of 2E and the C_1 charge does not change appreciably.

The following alternation makes A positive again and V_1 conducts to replace any charge lost by C_1 during the preceding alternation. Now, the line voltage and the C_2 voltage are series-aiding and the C_3 charge is maintained at 2E by electrons flowing from B to the C_2 positive plate, from the C_2 negative plate to the C_3 negative plate and from the C_3 positive plate through L and V_1 to A. At first, this current also tends to discharge C_2 but after C_3 is fully charged, the charge of C_2 remains fairly constant.

Thus, capacitors C_1 and C_2 are charged alternately, then discharged in series with the power line to maintain the C_3 voltage at twice the peak of the a-c input voltage.

With a load connected between B+ and ground, current is drawn from the power supply and the average voltage across C_1 and C_2 is somewhat less than the a-c line peak value. Likewise, the average output voltage is somewhat less than twice the a-c line peak.

Since a power transformer is not used, equipment employing this type of low voltage power supply generally has the heaters of its other tubes connected in series across the a-c power line. However, this arrangement places the heater that is connected to the B wire of the power line at a d-c potential of E volts above ground. Since the cathode of the same tube is at or near d-c ground potential there is a comparatively high d-c voltage between the cathode and heater, in addition to the normal a-c heater voltage. Under these conditions any cathode heater leakage tends to introduce a-c hum voltage into the signal circuits of the unit.

one rectifier, V_1, is connected directly to the plate of the other, V_2, but only one capacitor, C_2, is in series between the V_1 plate and the V_2 cathode. The other capacitor, C_1, is in series between point A of the a-c line and the junction of the V_1 cathode and V_2 plate.

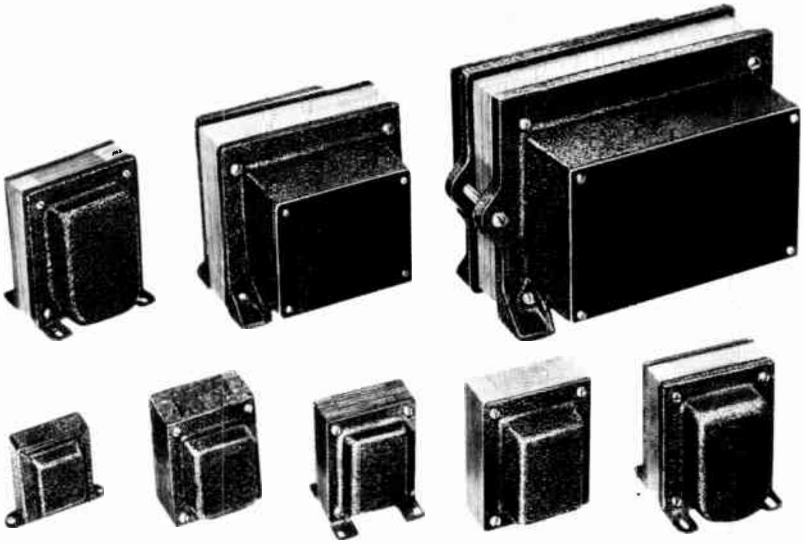

Power transformers are made in various shapes and sizes to meet the need of every type of electronic equipment.

Courtesy B. F. Miller Co.

HALF WAVE TYPE VOLTAGE DOUBLER

The high d-c voltage between the heaters and cathode of any other tubes is avoided by use of the half wave type voltage doubler shown in the simplified diagram of Figure 5A. Compared to the circuit of Figure 4, the cathode of

With this arrangement, it is possible to ground power line wire B as shown.

Although the two rectifiers, V_1 and V_2, conduct on alternate halves of the a-c power line cycle, the functions of the two capacitors C_1 and C_2 are somewhat different. In Figure 4, each capacitor is charged through a rectifier tube to approximately the peak line voltage and each forms a part of the output or filter circuit. In Figure 5A, only C_2 is a part of the output or filter circuit and it is charged to approximately twice the peak line voltage, while capacitor C_1, charged to approximately the peak line voltage, acts as a reservoir that adds its energy to that of the power line during the interval that C_2 is being charged.

To follow the action, first assume an a-c power line alternation during which wire B is positive with respect to wire A. With this polarity the plate of V_1 is positive with respect to the cathode, the tube is conductive and capacitor C_1 is charged to the indicated polarity. For this interval the plate of V_2 is negative with respect to the cathode, the tube is nonconductive and the only active part of the input circuit is that shown by the solid lines of Figure 5B.

Following the arrows, electrons move from negative wire A into capacitor C_1, causing one of its plates to become negative. This surplus on the negative plate causes electrons to leave the other plate and move to the cathode of V_1 through the tube to the plate and back to positive line wire B. Thus, the V_1C_1 charging circuit of Figure 5B is similar to the V_2C_2 charging circuit of Figure 4.

Referring again to Figure 5A, during the following a-c power line alternation, wire A is positive with respect to wire B, therefore the plate of V_1 is negative with respect to its cathode and the tube is nonconductive. During this interval V_1 is equivalent to an open circuit and the active portion of the circuit is shown by the solid lines in Figure 5C. With wire A positive and wire B negative, the line voltage is in series with the charge on capacitor C_1, and therefore, the total of these two voltages, equal approximately to twice the line voltage, is applied to the series circuit consisting of V_2 and C_2.

With this polarity of applied voltage, the plate of V_2 is positive with respect to its cathode, therefore the tube is conductive and allows C_2 to be charged to the indicated polarity. As shown by the arrows, during this interval electrons move from wire B to the negative plate of C_2, from the positive plate of C_2 to the cathode of V_2 through the tube to the plate to the positive plate of C_1 and from the negative plate of C_1 to wire A. As the total voltage applied to the V_2C_2 circuit is equal to that of two series sources each equal to the peak line voltage, capacitor C_2 is charged to approximately twice the peak line voltage.

Referring again to Figure 5A, C_2 is the input capacitor of the filter which includes choke L and output capacitor C_3. Rectifier tube

V_2 prevents C_2 from discharging back into the supply. However, C_2 does discharge to supply the current for the load circuits connected across the filter output between B + and ground.

C_1 is somewhat less than the peak supply line voltage.

The arrows in Figures 5B and 5C indicate a reversal of electron flow in C_1 and make it appear that a non-polarized type of capacitor is required at this point. However, when in operation, C_1 is charged during the alternation illustrated in Figure 5B and discharges but partially during the following alternation illustrated in Figure 5C. This complete action is repeated

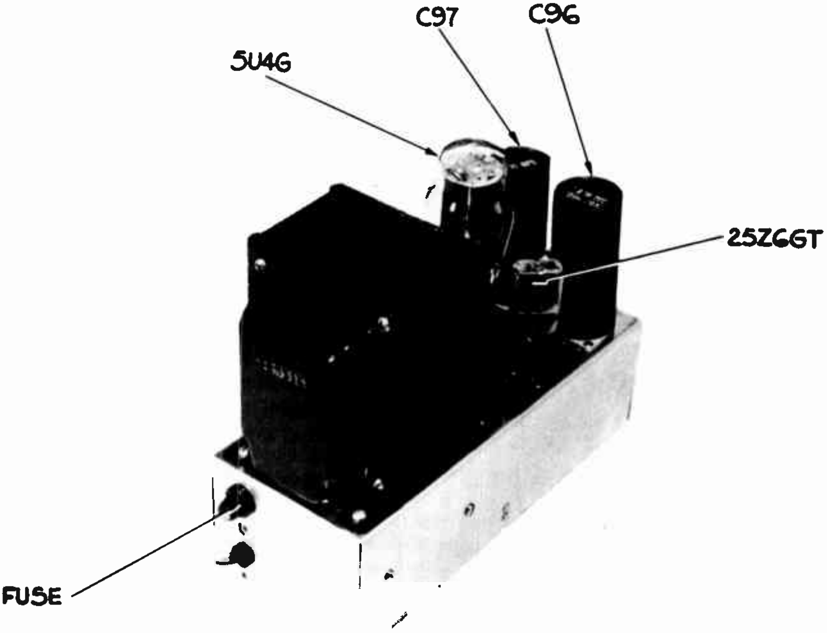

A compact power supply unit. Two rectifier tube circuits provide two independent values of voltage in this unit.

Courtesy Scott Radio Lab.

In actual operation this discharge into the load is continuous, therefore, the average voltage across C_2 is somewhat less than twice the peak line voltage. Also, since the energy from C_1 charges C_2 during a part of the input power cycle, the average voltage across during each input cycle and, as the charge equals the partial discharge, the polarity remains as indicated at all times. Therefore, the usual type of polarized electrolytic capacitor can be used.

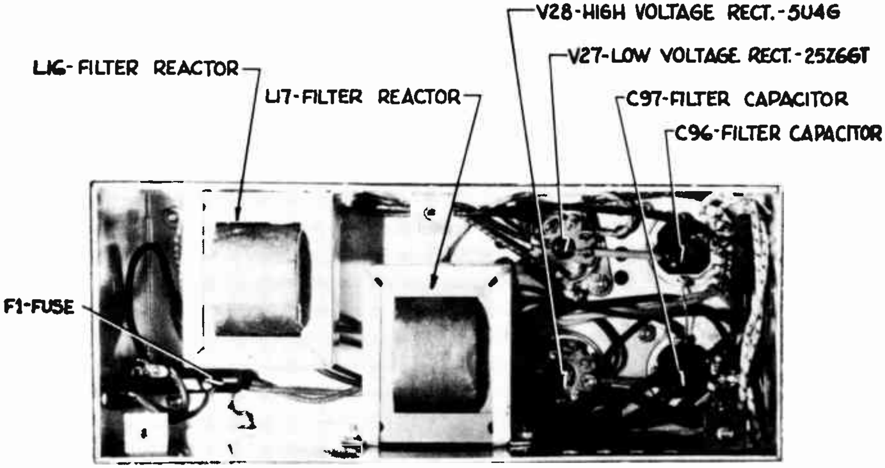

The under chassis view of the power supply shown in the preceding illustration. A filter choke is included for both rectifier circuits.

Courtesy Scott Radio Lab.

VOLTAGE MULTIPLIERS

When it is desirable to obtain d-c outputs greater than twice the input line voltage, the system of Figure 5A may be extended as shown in the circuit of Figure 6. Any number of rectifier tubes and capacitors may be used. However, with the heaters of the rectifiers connected across the a-c power line, in practice the number is limited by the dangerously high potential differences that are developed between the heaters and the cathodes of the tubes at the high voltage end of the system. Transformers could be provided to correct this condition but they would require separate well insulated filament windings for each tube and the simplicity of the system would be lost.

In operation, the action of the circuit of Figure 6 is similar to that explained for Figure 5A. When wire A of Figure 6 is positive with respect to wire B, tube V_1 conducts and charges capacitor C_1 to approximately the peak line voltage "E." During the following alternation when wire A is negative with respect to wire B, tube V_2 is conductive and allows capacitor C_2 to charge.

At this time the active charging circuit can be traced from negative wire A to the negative plate of C_2, from the positive plate of C_2 through tube V_2 to the positive plate of C_1 and from the negative plate of C_1 to positive wire B. As the line voltage across wire A-B and the charge of capacitor C_1 are series-aiding, capacitor C_2 is charged to voltage 2E, approximately twice the line voltage.

During the next alternation, wire A is positive again, tube V_3 is conductive and allows capacitor C_3 to charge. At this time, line voltage E and the 2E charge of capacitor C_2 are series-aiding so that capacitor C_3 is charged to approximately three times the line voltage, indicated as 3E. In addition, capacitor C_1 is charged, as explained above, to replace the energy it released to help charge C_2.

Following the same plan, when wire B is positive again, tube V_4 is conductive and allows capacitor C_4 to charge. In this charging circuit line voltage E and the 3E charge of capacitor C_3 are series-aiding so that capacitor C_4 is charged to approximately four times the line voltage, indicated as 4E. Also, at this time, capacitor C_2 is recharged to voltage 2E as explained previously.

Without repeating all the details, when wire A is positive again, tube V_5 is conductive and the line voltage E in series with the 4E charge of capacitor C_4 charges capacitor C_5 to approximately five times the line voltage, indicated as 5E. Capacitor C_N and tube V_N represent any number of such units as may be included in an arrangement of this kind and the d-c voltage developed across the last capacitor C_N becomes the output of the supply.

At first glance it may appear that when conductive, the various rectifier tubes short circuit the charging action of the circuit. However, this does not occur because once the series of capacitors are charged, the individual rectifiers carry current only for that portion of the a-c cycle necessary to restore the loss of charge required to supply the load current. As soon as stable operating conditions are reached, capacitor C_1 remains charged almost to peak line voltage, capacitor C_2 remains charged almost to twice peak line voltage and so on.

VOLTAGE MULTIPLIER POWER SUPPLIES

An example of a low-voltage power supply employing a **voltage multiplier** circuit is shown in Figure 7. Here, the three double-diode rectifier tubes V_1, V_2, and V_3 with their respective halves connected in parallel form a voltage doubler which provides an output of + 170 volts at point A in the diagram. In the same way, rectifier tubes V_4 and V_5, with their respective halves connected in parallel, form a voltage doubler which supplies a negative output of −190 volts at point C. This particular supply includes a power transformer, the primary of which, acting as an autotransformer, steps up the 117 volt input to a value of 125 volts.

A Mercury vapor half wave rectifier. In power applications where relatively high voltage and currents are needed a tube of this type is used.
Courtesy Radio Corporation of America

Following the positions of the symbols in the diagram, the lower end of the primary is grounded at a point below tube V_3. From the upper end there is a circuit up to the top, over to the right and down through the heaters of tubes V_1, V_2, V_3, V_4, and V_5 in series to the lower end. Each of these heaters require 25 volts, therefore, five of them in series operate properly across the 125 volt primary.

Referring to the upper part of Figure 7, when the upper end of the transformer primary is negative, the charging circuit is through limiting resistor R_1, capacitor C_1, from the lower cathode to plate of tubes V_1, V_2, and V_3, and back to the grounded lower end of the primary. With the exception of resistor R_1 and the parallel connected rectifier tubes, this circuit corresponds to the solid line portion of Figure 5B. However, with 125 volts input the peak voltage is $1.41 \times 125 = 176$ volts.

During the following alternation, the grounded end of the primary is negative and the active circuit is from ground through C_3, from the upper cathode to plate of tubes V_1, V_2, and V_3, and back through C_1 and R_1 to the upper end of the primary. The primary voltage and charge of C_1 are series aiding, therefore C_3 is charged to approximately twice the peak value or $176 \times 2 = 352$ volts. This circuit corresponds to the solid line portion of Figure 5C.

When the circuit is in operation, the load currents reduce the charge on C_3 to approximately 210 volts and also cause an IR drop across filter resistors R_3 and R_4 which reduces the output to +170 volts as indicated at point A.

In the lower section of Figure 7, capacitor C_2 corresponds to capacitor C_1 of the upper section. When the upper end of the primary is positive, the charging circuit can be traced from the lower, grounded end of the primary, from the upper cathode to plate of tubes V_4 and V_5, through capacitor C_2, limiting resistor R_2, and back to the upper end of the primary.

The action here is the same as explained for C_1 and, with one exception, both charging circuits are the same. The grounded end of the transformer secondary connects to a cathode of tubes V_4 and V_5 and to a plate of tubes V_1, V_2, and V_3. Thus, to make the tubes conductive, V_4 and V_5 require a polarity opposite to that of tubes V_1, V_2, and V_3. As a result of these connections, capacitors C_1 and C_2 are charged to opposite polarities with reference to the upper end of transformer primary.

When the upper end of the primary is negative, the charging circuit can be traced through limiting resistor R_2, capacitor C_2, the lower cathode to plate of tubes V_4 and V_5 and capacitor C_4 to the lower grounded end of the primary. The primary voltage and charge of C_2 are series-aiding, therefore C_4 is charged to approximately twice the primary peak voltage. Notice here, although charged to equal voltage, capacitors C_3 and C_4 are of opposite polarity with respect to ground.

The filter of the lower section includes resistor R_5 and inductor L which may be the focus coil mounted on the neck of a cathode ray tube. To regulate the current in this coil and thus control the focusing of the illuminated spot on the tube screen, series connected fixed resistor R_7 and variable resistor R_6 are connected in parallel with L.

Thus the action of this section of the supply is the same as explained for the upper section and also for the circuit of Figure 5A.

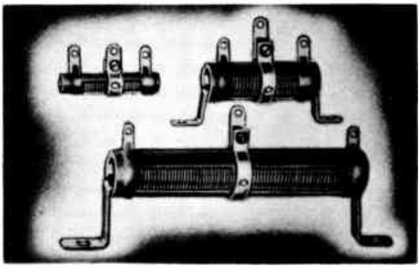

Wire wound resistors with adjustable taps. Suitable for bleeders and voltage dividers in power supply circuits.

Courtesy Ward Leonard Electric Co.

The only difference between the two sections of the complete supply of Figure 7 is that, for the upper section the negative plate of the output capacitor C_3 is connected to ground while for the lower section, the positive plate of the output capacitor C_4 is connected to ground. For the upper section of the supply the output is taken from the ungrounded or positive plate of capacitor C_3 while for the lower section the output is taken from the ungrounded or negative plate of C_4.

Thus, the tube circuits are connected across points A to C and have a total cathode-to-plate supply voltage of 170 +190 volts or 360 volts applied to them. Of course, the grid-cathode return circuits of the remainder of the stages are returned to ground, point B of Figure 7. To complete the supply, the transformer has two low voltage secondary windings which provide heater current for all other tubes.

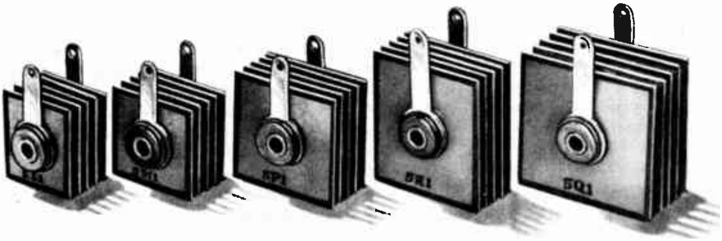

A group of selenium rectifiers which may be used in light weight power supplies.
Courtesy Selectron Division Radio Receptor Co.

This arrangement is similar to that explained for the output of Figure 2 and the plates of some of the tubes are connected through their load components to point A, Figure 7, while the grid-cathode circuits are returned to point C.

VOLTAGE DOUBLER POWER SUPPLY

The circuits of Figure 8 illustrate a somewhat different arrangement of a low voltage doubler type of power supply. It does not require a power transformer, and dry plate selenium rectifiers SR_1 and SR_2 replace the common tube types. The voltage doubling action is the same as explained for Figure 5.

Starting at the bottom of the diagram of Figure 8, on one supply alternation, capacitor C_1 is charged through selenium rectifier SR_1 and limiting resistor R_1. During the following alternation, C_1 discharges in series with the line voltage through rectifier SR_2 to charge capacitor C_2 to approximately double the line voltage. The output filter, consisting of resistor R_2 and capacitor C_3 is connected across capacitor C_2 and allowing for the IR drop across R_2 there is 250 volts across C_3.

For reference, the positive plate of C_3 is connected to the point marked "B^{++}" and "+250 v" while the negative plate is connected to the point marked "B –." Capacitor C_4 is connected between B^{++} and ground while resistor R_3, in parallel with capacitor C_6 is connected between B – and ground. As B – is connected directly to one supply line wire it can be considered as the common return, but due to the IR drop across R_3, it is not at d-c ground potential.

The interesting feature of this circuit is that the plate circuits of the various tubes are connected in a SERIES-PARALLEL arrangement to operate as a voltage divider.

By this method, some tube plate circuits operate at the required 250 volts and others at 125 volts without the power loss inherent in the usual resistor type of voltage divider. For simplicity, all other circuit components have been omitted and the diagram of Figure 8 shows only direct plate and cathode connections.

Beginning at the top of the diagram, the plate circuits of tubes V_7, V_{9a}, V_{10b}, V_{11b}, and V_{13} are connected across the entire power supply output from B^{++} to B –. Both plates of tube V_8 are connected to the receiver high voltage power supply. Tubes V_3 and V_2 are connected in series across the entire supply so that part of the 250 volt output is dropped across the V_3 plate circuit and the remainder across the V_2 plate circuit. The tube V_5 requires more than 250 volts, therefore, its plate is connected to the input of the power supply filter at the junction between R_2 and C_2.

In the lower group of seven tubes, the plate circuits of V_1, V_4, V_6, V_{9b}, and V_{11a} are connected in parallel across B^{++} 250 v and B^+ 125 v. The plate circuits of V_{10a} and V_{12} are connected in parallel across B^+ 125 and B –. The tubes have been grouped so that the total plate currents of V_1, V_4, V_6, V_{9b}, and V_{11a} are equal to the total plate currents of V_{10a} and V_{12}. The other circuit components, such as plate loads, are chosen so that the drop across the plate circuits of V_{10a} and V_{12} is equal to exactly one half of the total supply voltage. With this arrangement there is 125 volts across B^{++} and B^{+} and 125 volts across B^{+} and $B-$.

Actually, the series-parallel plate connections are part of the signal circuits of the unit, but due to their voltage divider operation they can be considered as a part of the power supply. Keep this general plan in mind, or it may be confusing to find the cathode of one amplifier tube connected to the plate of another.

Although not shown in Figure 8, for this supply the tube heaters are connected across the 117 v a-c power line in a parallel-series arrangement to provide the proper voltage and current for each one.

IMPORTANT DEFINITIONS

HIGH VOLTAGE SUPPLY—A voltage source employed to supply tube elements or electrodes which operate at potentials higher than those required for the plates and screens of the ordinary types of electron tubes.

INTERLOCK SWITCH—A switch which is actuated to open a high-voltage source when a protective device such as a cover or door is rendered inoperative.

LOW VOLTAGE SUPPLY—A voltage source employed to supply the operating voltages for the elements of the ordinary types of electron tubes.

TIME DELAY CIRCUIT—An electric circuit in which the power supply voltage or current is delayed a definite time interval after the heaters are turned on to prevent high surge voltages.

VOLTAGE DOUBLER—A rectifier circuit which charges two capacitors in such a manner that a voltage approximately equal to twice the line voltage is applied to the output.

VOLTAGE MULTIPLIER—A rectifier circuit which charges two or more capacitors in such a manner that the output voltage is greater than the line voltage.

VOLTAGE TRIPLER—A rectifier circuit which charges three capacitors in such a manner that a voltage approximately three times the line voltage is applied to the output.

STUDENT NOTES

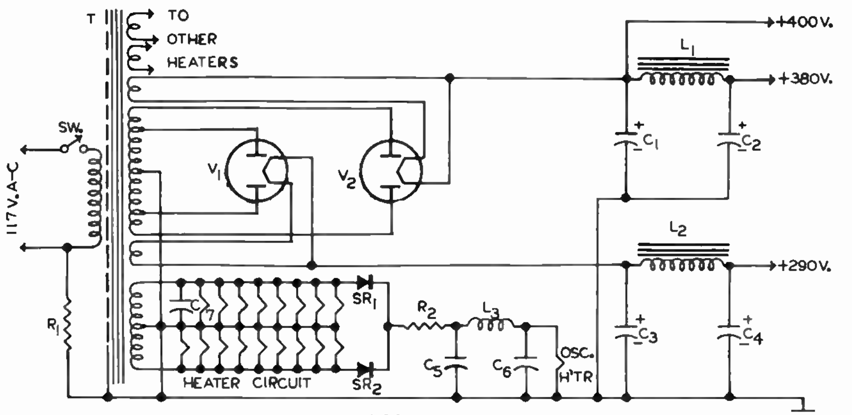

FIGURE 1

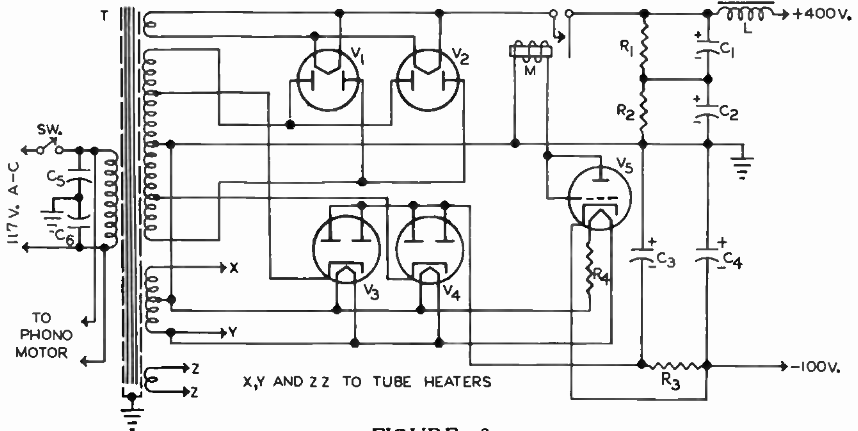

FIGURE 2

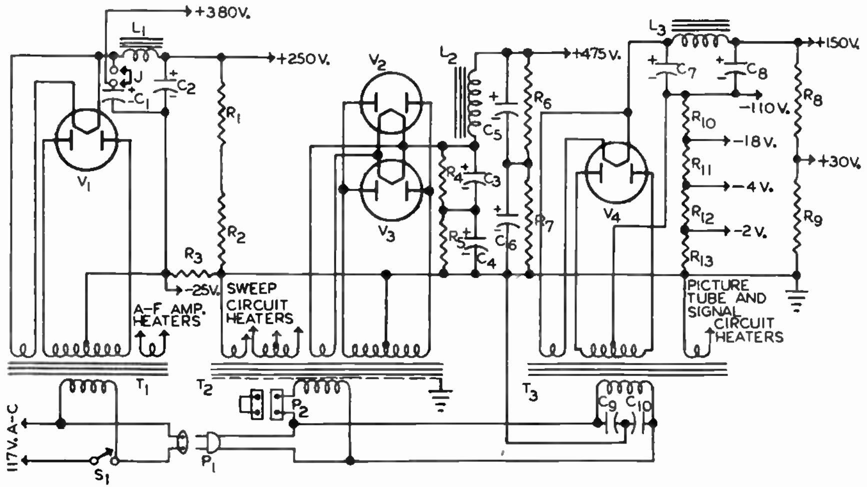

FIGURE 3

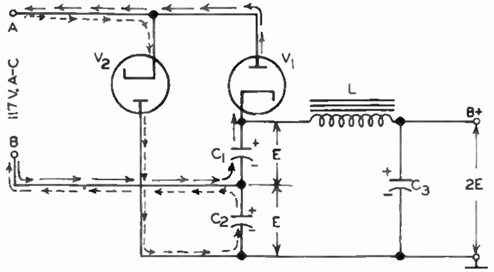

FIGURE 4

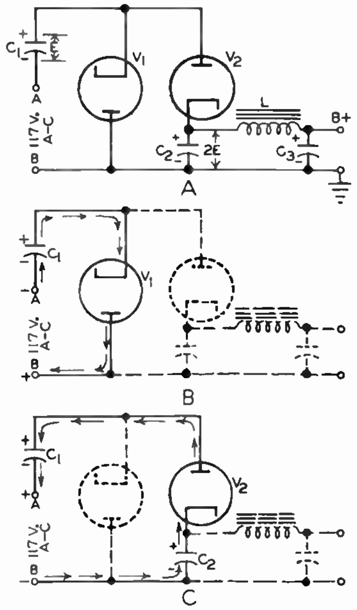

FIGURE 5

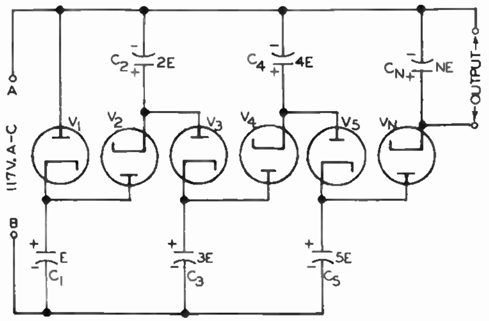

FIGURE 6

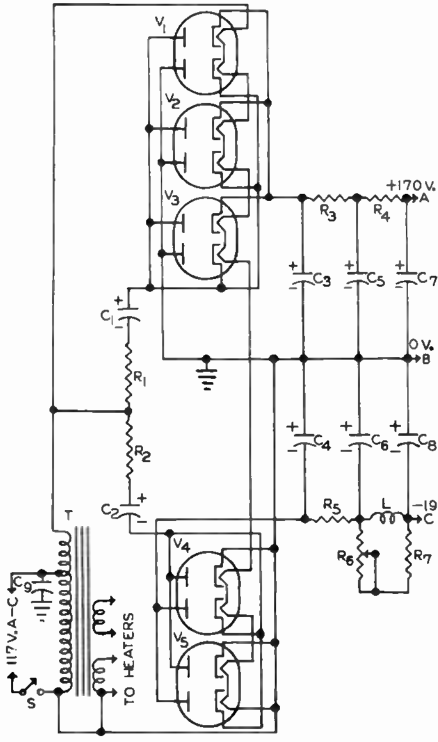

FIGURE 7

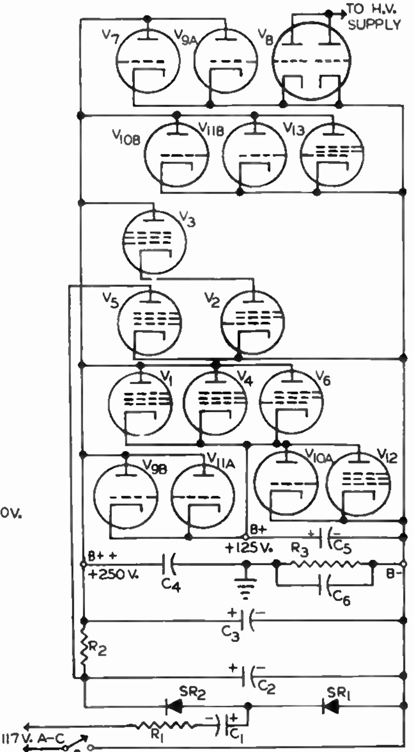

FIGURE 8

Cut along this line and send in for grading

DE FOREST'S TRAINING, INC.

SPECIALIZED SCIENTIFIC AND PRACTICAL INSTRUCTION

2533 NORTH ASHLAND AVENUE CHICAGO 14, ILLINOIS

QUESTIONS

11

How many advance Lessons have you on hand?..............................

Print or use Rubber Stamp.

Name.. Student No..................................

Street...Zone......................... Grade..............................

City...State................................ Instructor.........................

Write your answers on the "Ans." line below each question. If more space is needed use reverse side of this page.

1. Aside from voltage, how do low voltage power supplies differ from high voltage supplies?

Ans...

2. In the circuit of Figure 1, what is the purpose of L_3 and C_6?

Ans...

3. What is the purpose of resistors R_1 and R_2 connected in series across capacitors C_1 and C_2 in the circuit of Figure 2?

Ans...

4. Assuming normal operation, what three d-c voltages are provided by the circuit of Figure 2?

Ans...

5. In the power supply arrangement of Figure 2, what is the purpose of the time delay circuit?

Ans...

6. In the supply line circuit of Figure 3, what is the purpose of plug P_2?

Ans...

7. For power supplies of the voltage doubler or multiplier types what is the relative magnitude of the load currents?

Ans...

8. What is the advantage of a half wave doubler supply like that of Figure 5 compared to a full wave doubler like that of Figure 4?

Ans...

9. In the circuit of Figure 7, what is the purpose of variable resistor R_6?

Ans...

10. If, in the study of d-c circuits, it is found that some combinations of tubes provide direct connections from the cathode of one to the plate of another, what is the probable plate circuit arrangement?

Ans...

FROM OUR *President's* NOTEBOOK

CHEERFULNESS

One of the hardest things in the world to imitate successfully is **Cheerfulness**. Yet in every group of people there is at least one individual who feels it his or her bounded duty to "spread gladness and cheer". And they go about doing just that even though forced to use the easily detected synthetic kind.

Our deepest thoughts and beliefs are reflected in our faces and in our actions. If we don't feel the Cheerfulness we try to spread, we fail to show it, and our attempts fall far short of our purpose.

My grandfather used to say that "when a dog bares his teeth and growls, and at the same time wags his tail, it's hard to know which end to believe".

So aren't we going to be better off to try to create a Cheerful frame of mind and feeling within ourselves—to try to feel and know that everything is "looking up"? There's time enough then to start distributing our Cheer among others who can safely accept it for what it is—the Genuine Article.

Yours for success,

E. B. DeVry

PRESIDENT

PRINTED IN U.S.A.

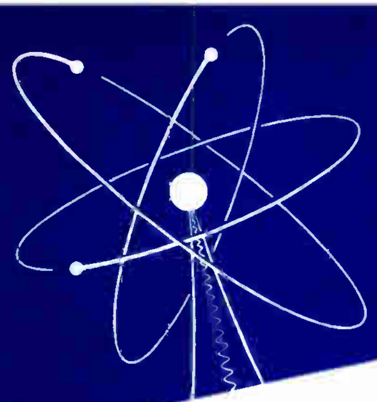

TRANSMISSION NETWORKS

Lesson TPC-4

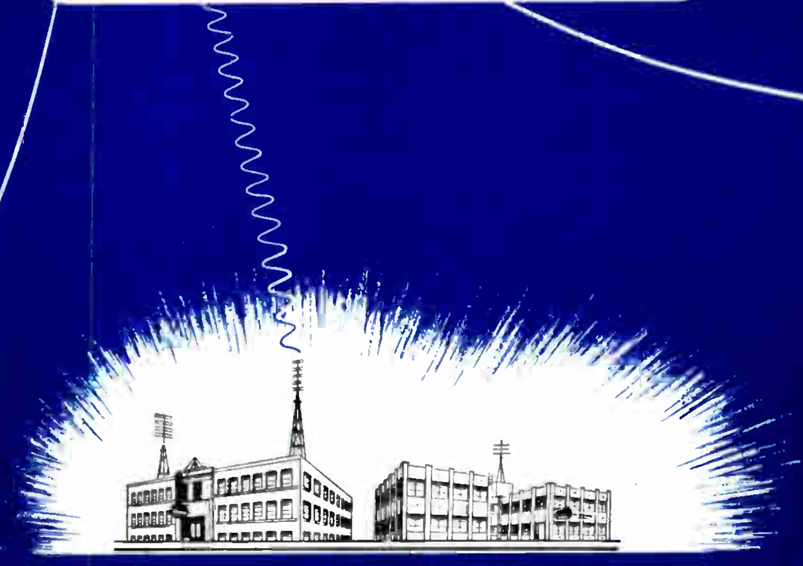

DE FOREST'S TRAINING, INC.

2533 N. Ashland Ave., Chicago 14, Illinois

Affiliated with DeVRY TECHNICAL INSTITUTE

TPC-4

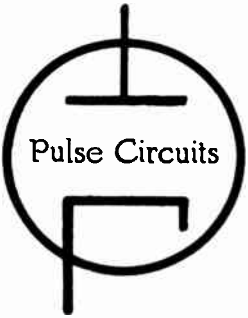

TRANSMISSION NETWORKS

DE FOREST'S TRAINING, INC.
2533 N. Ashland Ave., Chicago 14, Illinois
Affiliated with DeVRY TECHNICAL INSTITUTE

A microwave antenna (parabolic dish) and associated equipment used to beam television programs from remote points to main studios. Coming out of the rear of the reflector is the coaxial transmission line used to supply r-f power from mobile transmitter.

Courtesy General Electric Co.

Pulse Circuits

TRANSMISSION NETWORKS

Contents

Formula for failure: Try to please everybody.
—H. B. Swape

TRANSMISSION NETWORKS

Any complete electron unit consists of one or more stages, each of which performs some specific function, and larger units may contain several sections, which include one or more stages that perform a given function, or a group of related functions. Whatever the arrangement, each stage or section contributes to the operation of the complete unit. To transfer or convey signal energy from stage to stage, section to section, and from one complete unit to another, devices known as transmission networks are employed. Since the filter and equalizer types of transmission networks have been described, this lesson is concerned with the types known as attenuators and coupling devices.

As described in a previous lesson, an attenuator consists of a component or a group of components arranged so that a choice of various fractions of the total output may be applied to the following stage or unit. The coupling devices include transformers; RC, RL, and RCL circuits; and transmission lines which carry the energy some distance, such as from an antenna to the input of a receiver.

Depending upon its specific function in a given electron circuit, a transmission network must convey the signal in some particular desired manner. That is, the attenuation must be either a minimum or some specified amount and the wave-form distortion must be minimum or some predetermined change of wave-form must be produced, etc. The response of any given transmission network depends upon the type of network, electric values of its components, and upon the signal applied.

TYPES OF SIGNALS

Although the term "signal" is defined as the variation of a transmitted or received wave with time, it is common practice to speak of the varying voltage or current itself as constituting the signal in an electric or electron circuit. Thus, a signal may be considered any voltage, current, or electromagnetic wave which, by virtue of its configuration, magnitude, or frequency, serves to convey the information, message, effect, or other intelligence to the required point or points.

On this basis, many types of voltages and currents are classed as "signals," even though their characteristics are considerably different than the more familiar audio signals produced by microphones and phono pickups, which consist of a single or several sine waves. Circuit action with sine wave voltages and currents has been covered previously. However in many electron equipment applications, signals may have other waveforms such as rectangular, triangular, trapezoidal, or may consist of a regular or irregular succession of "pulses" of constant or varying amplitude and duration.

To determine the amplitude, frequency, or phase response of a network to which a signal is to be applied, any nonsinusoidal wave may be resolved into a group of harmonically related sine waves, and thus any single pulse may be resolved into a band of frequencies. However, in the case of pulse type signals, often these characteristics of a network are of secondary importance only; it is "the amplitude-time" response which is of greatest importance.

VOLTAGE PULSES

The wave-form of what may be considered an "ideal" pulse is shown by the curve of Figure 1A. With voltage E plotted against time, this curve shows that the pulse voltage rises from zero to maximum instantly, remains constant for the pulse duration, and then drops instantly to zero. Although Figure 1A illustrates voltage, a current pulse may have the same wave-form.

This wave-form is purely hypothetical because some time is required for any voltage or current change to take place. However, to simplify circuit study, it is convenient to determine the amplitude-time response of a given stage or network by assuming an ideal pulse is applied to its input and then describing the output wave-form.

In a practical circuit, a voltage pulse has a wave-form of the general shape shown in Figure 1B. Here, the rising front and descending back of the curve are not vertical since a definite time is required for any pulse to increase from zero to maximum and decrease from maximum to zero. The section from A to B is termed the **leading edge** of the pulse, the section from B to C the **flat top**, and from C to D the **trailing edge** or tail.

Technically, the **rise time** t_r is defined as the time required for the pulse to increase from 10% to 90% of its maximum amplitude, as indicated by the horizontal dashed lines. Likewise, the **fall time** t_f is the time required for the pulse to decrease from 90% to 10% of the maximum pulse voltage. However, for simplicity, the rise time often is considered the entire time for the pulse voltage to increase from zero to maximum, and the fall time the interval during which the pulse decreases from its value at point C to zero.

When passed through various circuit networks, the pulse of Figure 1B may be distorted in one or more of the ways illustrated in

Figures 1C, 1D, and 1E. A circuit may cause a pulse to OVERSHOOT as shown in Figure 1C. When overshoot occurs, often it is followed by a few cycles of spurious oscillations as shown in Figure 1D. Some circuits cause the top of the pulse to decrease in amplitude with time, this action being known as SAG. As indicated in Figure 1E, the amount of sag is the difference between the maximum pulse voltage at the leading and trailing edges respectively. As explained later, a fourth effect produced by transmission networks, is the increase in the pulse rise time.

RESISTANCE ATTENUATORS

Forming a simple voltage divider, the resistance network of Figure 2 serves as an attenuator. Usually, it is desired that each successive setting of the contact S reduces the signal by some definite fraction "p" as the contact is moved down the divider. The fraction p is called the **attenuation fraction.** When switch S is set at terminal 1 of Figure 2, the output voltage E_o is equal to the input voltage E_I. With S at terminal 2, E_o is equal to $E_I \times p$; when switched to terminal 3, $E_o = E_I \times p^2$; and at terminal 4, $E_o = E_I \times p^3$; etc.

For example, with the attenuator of Figure 2, suppose E_I is 250 millivolts and the attenuation fraction $p = 1/10$ for each step. Then the E_o at the various terminals is as follows:

Terminal Number	E_o in mv.
1	250.0
2	25.0
3	2.5
4	0.25
5	0.025

When the required total resistance R_T of all the resistors in the attenuator is known, the individual resistors may be calculated by means of the following formulas:

$$R_1 = R_T\,(1 - p)$$
$$R_s = R_{s-1} \times p$$
$$R_N = \frac{R_{N-1} \times p}{1 - p}$$

Where R_1 corresponds to R_1 Figure 2; R_s corresponds to any of the intermediate resistors, R_2, R_3 or R_4; and R_N corresponds to R_5.

For an example, suppose a five-resistor unit like that of Figure 2 is to be constructed in which $R_T =$ 2000 ohms, and attenuations of 1/10, 1/100, 1/1000, and 1/10,000 are desired. Since $1/100 = (1/10)^2$, $1/1000 = (1/10)^3$, and $1/10{,}000 = (1/10)^4$, the required attenuation fraction p is 1/10, and using the proper equation:

$$\begin{aligned} R_1 &= 2000\,(1 - 1/10) \\ &= 2000 \times 9/10 \\ &= 1800 \text{ ohms,} \end{aligned}$$

or, to determine R_2, substitute R_2 for R_s:

$$R_2 = R_{2-1} \times p = R_1 \times p$$

Using the value obtained above for R_1:

$R_2 = 1800 \times 1/10 = 180$ ohms.

In like manner:

$$\begin{aligned} R_3 &= R_{3-1} \times p \\ &= R_2 \times p \\ &= 180 \times 1/10 = 18 \text{ ohms,} \end{aligned}$$

and:

$$\begin{aligned} R_4 &= R_3 \times p \\ &= 18 \times 1/10 = 1.8 \text{ ohms.} \end{aligned}$$

To check the solution:

$$\begin{aligned} R_1 &= 1800.0 \\ R_2 &= 180.0 \\ R_3 &= 18.0 \\ R_4 &= 1.8 \\ R_5 &= .2 \\ \hline R_T &= 2000 \text{ ohms.} \end{aligned}$$

An attenuation and equalizer panel designed to control audio frequency voltages in the recording industry.

Courtesy Presto Recording Corp.

Finally, substitute R_5 for R_N:

$$\begin{aligned} R_5 &= \frac{R_{5-1} \times p}{1 - p} \\ &= \frac{R_4 \times p}{1 - p} \\ &= \frac{1.8 \times 1/10}{1 - 1/10} \\ &= \frac{.18}{9/10} = 0.2 \text{ ohms.} \end{aligned}$$

When pulses or signals containing high frequency sine wave components, are to be passed through an attenuator like Figure 2, the resistors must be of the noninductive type and stray capacitances must be kept to a minimum. The total resistance R_T must be limited to about 10,000 ohms or less when the transmitted pulse has a rise time of one microsecond or less. With a higher resistance of R_T, the network has too great a time constant which increases the rise time of the pulse. If the applied pulses have a rise time of approximately 0.1 microsecond, usually the stray capacitances of the attenuator and connected circuits require that R_T be less than 2000 ohms.

RC Network Attenuators

When the periods of the signal waves or the pulse rise times are very short, the simple resistance attenuator of Figure 2 is not satisfactory because the stray capacitances in the attenuator as well as the stray inductances of the resistors and connecting leads tend to increase the rise time and increase the attenuation of the higher frequency signal components. To reduce these undesirable effects, the capacitance compensated attenuator arrangement of Figure 3 is employed. Although more sections may be used, the most common arrangement consists of the illustrated single step device in which the voltage division is provided by the two sections R_1C_1 and R_2C_2.

The unit of Figure 3 may be partially independent of frequency or rise time if circuit values are chosen so that $R_1C_1 = R_2C_2 = R_3C_3$. Thus, all frequency components are attenuated practically an equal amount, and pulse wave-forms change very little when the signal passes through this attenuator.

Usually, an attenuation ratio of 1 to 10 or 1 to 100 is used, with C_1 adjustable as indicated to provide an output E_o with minimum distortion or change from the wave-form of E_I. When the signal consists of pulses, the output pulses will have overshoot if C_1 is too large, and the rise time will be excessive if C_1 is too small. To adjust C_1, an input pulse with relatively short rise time is applied to the E_I terminals, and C_1 varied until the wave-form of E_o has the steepest leading edge that can be obtained without overshoot.

RC COUPLING CIRCUITS
High Pass Networks

Many electron units contain interstage coupling circuits consisting of a resistor and a capacitor. In most cases, these circuits or networks are arranged with the input signal voltage E_I applied across C and R in series, and the instantaneous drop across R forms the output voltage E_o. The circuit of Figure 4A forms a high pass network, the response of which has been described in a previous lesson.

Reviewing briefly, when the input E_I has sine wave-form, the output E_o is reduced in amplitude and shifted in phase to lead E_I. The amplitude reduction, or attenuation, varies in proportion to the t/T ratio, where t is the period for pulse E_I and T the time constant of the circuit. Also, the phase shift is proportional to t/T, with E_o leading E_I by some angle between 0 and 90°.

When E_I has rectangular waveform, E_o is distorted by an amount proportional to the t/T ratio, where t and T represent the period and time constant, respectively, as before. If t/T is large, E_o has the form of sharp pointed pulses and falls to zero in a time equal to t or less as shown by curve (1), Figure 4B. If t/T is small, the wave-form of E_o resembles E_I, but has a sag in the flat top as illustrated by curve (2).

For simplicity, the curves of Figure 4B are drawn by assuming the input voltage E_I is an ideal pulse like that of Figure 1A. Also, the effect of the network on the leading edge of the pulse has been neglected. For many applications, this approximation of the action is satisfactory. However, practical pulses do have definite rise times, and the effect of a transmission network on the leading edge of the pulse is important when minimum wave-form distortion is required. Under such conditions, it is more convenient to consider the circuit action in terms of a t_r/T ratio in which t_r is the time required for the pulse to rise from point A to point B, Figure

Resistance attenuators are used to control the amplitude of the various signals generated in this test instrument.

Courtesy Hickok Electrical Instrument Co.

1B. Again T represents the time constant and is equal to RC for the circuit of Figure 4A. Consequently t_r/T represents the number of time constants per rise time.

On this basis, the wave-forms of E_o for various t_r/T ratios are shown by the curves of Figure 4C when the pulse E_I is applied to the high pass network. Here, E_I has the sloping front of a practical pulse, and when $t_r/T = .05$, the pulse rises from zero to maximum in a time t_r equal to .05 or 1/20th the time constant of the circuit, and E_o has the form indicated by the curve labeled "$t_r = .05T$." When the pulse rises to maximum in a time equal to .5T, the t_r/T ratio equals .5, and E_o has the form shown by the curve labeled "$t_r = .5T$." Finally, the curve labeled "$t_r = 2T$" shows that E_o departs considerably from the wave-form of E_I when the time of pulse rise is two network time constants.

In general, the curves of Figure 4C indicate that E_o has the greatest amplitude and least wave-form distortion when the t_r/T ratio is small. In each case, E_o increases during the interval t_r, after which it decreases at an exponential rate. When t_r is large compared to T, the leading edge of the output wave is curved considerably, but when small compared to T, the output pulse E_o rises almost as rapidly as E_I and to nearly the peak value E_I before beginning its exponential fall. Thus, to transmit a pulse faithfully a high pass network must have a relatively long RC time constant so that the t_r/T ratio is small.

Low Pass Networks

A second RC network arrangement employed in electron equipment is the low pass circuit shown in Figure 5A. Again the input signal E_I is applied to the resistor and capacitor in series, but now the output is taken across the capacitor. As explained in a previous lesson, when E_I has sine waveform, this network output amplitude is directly proportional to t/T, where t is the period of E_I, and its phase shift varies inversely with t/T, with E_o lagging E_I by some angle less than 90°. Also, when E_I has rectangular waveform, the wave-form of E_o is distorted by an amount inversely proportional to t/T. In Figure 5B, curve (1) illustrates the form of E_o when t/T is small, and curve (2) shows E_o when t/T is larger. Here again, an ideal input pulse is assumed for E_I.

As with the high pass networks, often it is convenient to consider the effect of a low pass network on the pulse wave-form on the basis of the t_r/T ratio in which t_r represents the time required for a practical pulse to rise from zero to maximum. Thus, when a pulse E_I with a sloping leading edge is applied to the input terminals of the circuit of Figure 5A, the output E_o for various t_r/T ratios has the forms shown by the curves of Figure 5C.

From top to bottom in the Figure, the solid line curves show the wave-form of E_o when the t_r/T ratios are 5, 2, .5, and .05, respectively. As this graph indicates, the output pulse wave-form is distorted the least when t_r is long compared to T. In fact, when t_r is equal to 10T or more, the leading edge of the E_o pulse has nearly the same slope as that of the E_I pulse, although delayed by a small interval t_d.

RCL COUPLING CIRCUITS

Figure 6A shows an RCL high pass circuit in which an inductor L is inserted in series with resistor R, and the output E_o is taken off across both R and L. When a voltage pulse E_I is applied to the input of this circuit, the resulting current charges capacitor C in a manner similar to that in a simple RC circuit. However, across coil L this current develops a back emf E_L which opposes the changing current. Thus, E_L adds to the voltage drop E_R across resistor R so that, at any instant, the output E_o is equal to the algebraic sum of these two voltages.

For the same t_r/T ratios as in Figure 4, the RCL circuit of Figure 6A has the responses shown by the curves of Figure 6B. For Figure 6, T = RC. During the pulse rising period t_r, circuit current is increasing from zero, and E_L tends to oppose the current. Thus, E_L is in the same direction as E_R, and with the same RC values the output voltage E_o is greater at any instant during this period than in the circuit of Figure 4A. The result of this action is an increase in the peak to which E_o rises during the period t_r, Figure 6B. That is, compared with the curves of Figure 4C, the corresponding curves of Figure 6B indicate higher peak values of E_o for each t_r/T ratio.

At the end of the pulse rise period, E_I is constant and the charging current decreases from its maximum. The emf E_L now has a direction such that it tends to maintain the charging current, and therefore, has polarity opposite that of E_R. Thus, E_o is less than E_R at any given instant during the remaining part of the pulse period.

This action results in a reduction in the time required for the output pulse to fall when t_r/T is relatively large. When t_r/T is relatively small, the decay of current is prolonged by the back emf across L, and the output pulse wave-form is only slightly changed from that of E_I. Thus, for given R and C components, the larger the L the greater will be the various effects explained. Although the insertion of a small inductance improves the operation, if L exceeds

$.25R^2C$, oscillation occurs and produces distorted wave-form like Figure 1D.

In the output circuits of electron tube amplifiers, the load resistor and the circuit shunt capacitance, form a parallel network like that shown in Figure 7A. Electrically, this circuit is the equivalent of the low pass circuit of Figure 5A and, therefore, has the same response to pulse signals as shown by the various curves of Figures 5B and 5C.

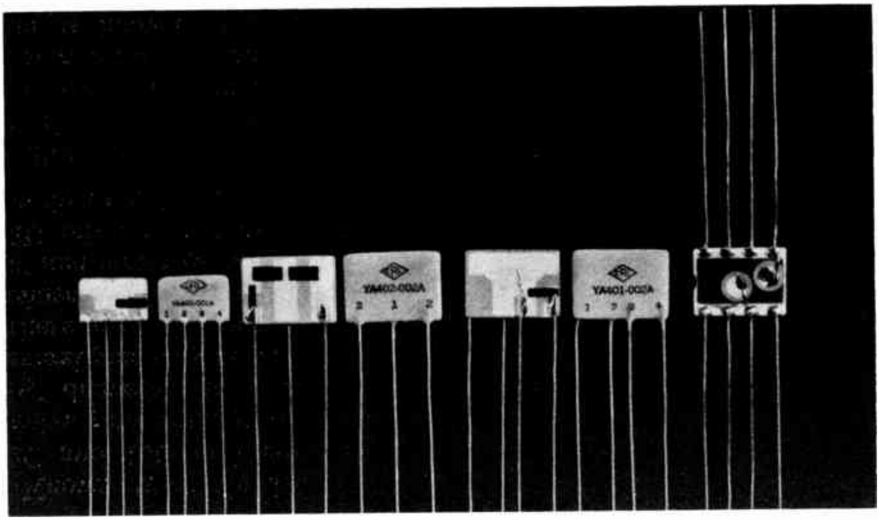

To reduce stray inductive and capacitive effects and to save space, networks often are made in printed circuit forms.

Courtesy Centralab Div. Globe Union, Inc.

By adding an inductor L in the resistive branch of this circuit, the RCL network of Figure 7B is obtained to produce an output pulse E_o which has a leading edge more nearly like that of the input pulse E_I.

As with the high pass network for the circuit of Figure 7B, L is chosen in terms of the factor R^2C. That is, the circuit inductance L is made equal to some desired value NR^2C, where N is a positive number between 0 and 1. In the form of an equation:

$$L = NR^2C,$$

which can be rewritten:

$$N = \frac{L}{R^2C} = \frac{L}{R} \times \frac{1}{RC}.$$

Since L/R is the time constant T_L of the L and R components in the circuit, and RC the time constant T_C of the R and C components, L/R^2C is equal to $(T_L) \times (1/T_C)$, and:

$$N = \frac{T_L}{T_C}.$$

For various values of N, the output of the circuit of Figure 7B is shown by the curves of Figure 8, when a pulse E_I is applied to the input terminals. For curve (1), $N = O$, and thus $L = O$ also, and the response is like that for the circuit of Figure 7A.

For T_L/T_C ratios (values of N) up to and including .25, the rise of E_o approaches more and more closely that of E_I. However, .25 is the highest ratio which may be employed without producing overshoot. As shown by curves (3), (4), and (5), when N is greater than .25, E_o requires less time to rise to maximum, but produces an overshoot which is directly proportional to N.

As the equation $L = NR^2C$ shows, in any given circuit N indicates the magnitude of the inserted inductance L relative to the product R^2C. Thus, for a circuit like that of Figure 7B with given values of R and C, the various curves of Figure 8 illustrate the response for L between 0 and 100% of R^2C.

Usually, in practical coupling circuits, the resistance R is determined by gain-bandwidth considerations, and the shunt capacitance C is inherent in the construction of the equipment. Thus, the product R^2C is predetermined, therefore N is chosen to provide the particular response desired. Finally, with N, R, and C known, the needed inductance can be calculated.

TRANSMISSION LINES

In general, a **transmission line** consists of a set of conductors employed to carry current of electric power circuits over long distances, or to transfer signal energy from one location to another. When used for the latter purpose, a transmission line may be considered a transmission network similar to the types described above.

In the case of d-c or low frequency a-c, it may be fairly easy to visualize a flow of electrons in one wire from the source to the load, and a return flow in another wire from the load to the source. Thus, any pair of parallel wires forms a simple transmission line and, together with the source and load, serves to confine the current to a definite path.

However, at higher a-c frequencies, the skin effect forces the current to travel closer to the outer surface of a conductor and causes an increase in its effective resistance. Also, the inductance and capacitance of the conductors, as well as the leakage resistance between them, become of considerable importance. Thus, the various characteristics of any given transmission line must fall within limits which depends upon the frequency range of the signal energy to be transmitted efficiently.

Types of Lines

Two basic types of transmission lines are illustrated in Figure 9. In Figure 9A the two-wire parallel conductor contains two conductors which are held at a constant separation and insulated from each other by some material such as polyethylene. Other terms applied to this type of line are TWIN-LEAD and OPEN WIRE LINE. Variations of this construction consist of conductors separated by insulating spacers at intervals; two conductors imbedded in the wall of polyethylene tubing so that the air core of the tubing serves as the dielectric between them; and two polyethylene jacketed conductors which in turn are enclosed in a copper braid shield and a moisture-proof thermoplastic cover. The shield reduces radiation of energy and also pick-up of unwanted energy by the line.

A transmission line using the basic construction shown in Figure 9B is called a COAXIAL CABLE, or CONCENTRIC LINE. In this line, a central wire forms one conductor which is surrounded by a concentric metallic covering that may be flexible or rigid and which forms the second conductor. The central conductor is held at the center of the outer conductor by means of a dielectric material. In some cases, the dielectric consists of a continuous tube of polyethylene, and in others, beads of polystyrene or pyrex are spaced at equal intervals along the inner conductor. The outer conductor confines the transmitted signal energy to the interior of the line, and also serves as a shield to prevent pickup of external energy. When flexible, usually this outer conductor consists of copper braid, and as indicated in Figure 9B, the coaxial cable is protected by a weatherproofing cover of rubber or plastic composition.

Line Constants

As explained in an earlier lesson, depending on their construction and the materials of which they are made, all circuits have definite resistance, capacitance, and inductance. While for d-c and low frequency a-c, the resistance is the major factor, at higher frequencies the capacitance and inductance become increasingly important. In addition to resistance, capacitance, and inductance, a transmission line has a property known as shunt conductance which is a measure of the leakage current through the dielectric. This current exists because no dielectric is a perfect insulator.

Known as "constants," these properties are distributed evenly along the length of any uniform transmission line, and for convenience, may be indicated schematically as a series of "lumped" components as shown in Figure 10. Here, the series L and R elements represent the resistance and inductance of the two conductors, the capacitors C represent the distributed capacitance, while the shunt conductance is indicated by the resistors R′ to show the paths of the leakage current. Thus, the leakage between conductors may be expressed in the most convenient terms of either conductance G or resistance R′, where $G = 1/R'$.

As indicated in Figure 10, if the line is considered as sections of equal length, all R, L, C, and R′ elements are respectively equal. However, even the diagram is not a true representation of an actual transmission line, because each infinitely small unit of length adds something to the line.

It is customary to express the leakage between conductors in terms of conductance G of so many micromhos per foot, or resistance R′ of so many megohms per foot. The capacitance C is expressed in micromicrofarads per foot, the inductance L in microhenrys per foot, and the resistance R in ohms per foot.

In most practical lines, R and G

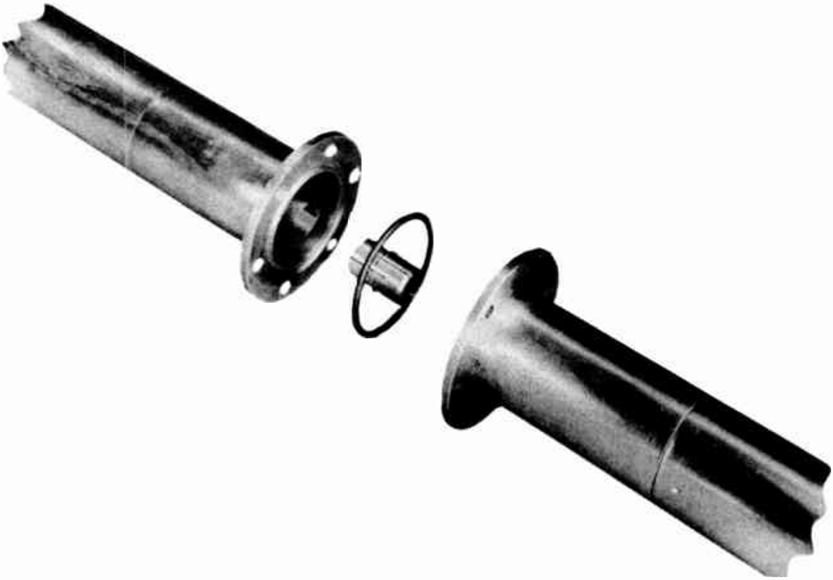

A view of the connection used in a large concentric transmission line. The diameter is 3⅛ inches.
Courtesy Andrew Corporation

are small enough (R′ is large enough) to be neglected, leaving L and C as the chief factors to be considered in addition to the load. In most cases, L and C are just as important as the load itself; sometimes they are even more important.

Characteristic Impedance

Each line section of Figure 10 has a definite impedance depending upon R, L, C, and R′, and when connected to a source of alternating voltage will permit some specific current. To increase the length of the line, additional sections must be included, and due to the shunting effect, each added section will reduce the total impedance. However, each added section has less and less effect on the total impedance until finally their effect is negligible. Under these conditions, the line is considered as being infinite in length and the final impedance thus obtained is called the **characteristic impedance**, or **surge impedance** (Z_o).

Although it is impossible to construct a transmission line of infinite length, it is convenient to rate transmission lines in terms of the impedance Z_o which they would have if infinitely long. By making measurements on a given line of specific length, data can be obtained which permits calculation to a very close approximation of the infinite line impedance. The characteristic impedance is determined by the size and kind of wire, the nature of the medium separating the two conductors, and the distance by which they are separated.

In each section of the line of Figure 10, two L and two R elements make up the series impedance Z_1, while the C and R′ elements constitute the shunt impedance Z_2. That is, for any one section, the total series resistance $R_T = 2R$, and the total series inductance $L_T = 2L$. The total series impedance is equal to the vector sum of the resistance and reactance, therefore,

$$Z_1 = \sqrt{R_T^2 + X_{LT}^2}.$$

The shunt impedance consists of R′ and C in parallel, equal to their product divided by their sum. Since vector addition is necessary:

$$Z_2 = \frac{R' \times X_c}{\sqrt{(R')^2 + X_c^2}}.$$

In terms of the series and shunt impedances, the characteristic impedance of the line can be expressed as:

$$Z_o = \sqrt{Z_1 \times Z_2},$$

in which:

Z_o = characteristic impedance in ohms,

Z_1 = series impedance in ohms per unit length,

Z_2 = shunt impedance in ohms per unit length.

As the quantities R and G are negligible for most practical lines, Z_1 almost equals $2\pi f L_T$, and R' is so much greater than X_C that Z_2 is almost equal to $\frac{1}{2}\pi fC$, at any given frequency f. Thus, substituting these values for Z_1 and Z_2 in the previous equation:

$$Z_o = \sqrt{(2\pi fL) \times \frac{1}{(2\pi fC)}} = \sqrt{\frac{2\pi fL}{2\pi fC}} = \sqrt{\frac{L}{C}},$$

where:

L = total inductance in henrys per unit length,

C = shunt capacitance in farads per unit length.

This expression assumes that the dielectric separating the conductors is air. In the more common "solid dielectric" lines, the impedance Z_o is reduced by the factor $\sqrt{1/K}$, where K is the dielectric constant of the insulating material, because it has the effect of increasing the capacitance C per unit length of the line. Thus, for the common types of transmission lines:

$$Z_o = \sqrt{\frac{L}{CK}}$$

A cross sectional view of a parallel wire line is shown in Figure 11A, and of a coaxial cable in Figure 11B. As indicated "S" is the spacing between centers of the parallel conductors, with an outside diameter "d". Also, "d" indicates the outside diameter of the central conductor, and "D" the inside diameter of the outer conductor of the coaxial line. For the parallel wire type of line, Z_o increases with the ratio S/d, and with the ratio D/d for the coaxial cable.

Wave Length and Velocity in Lines

In Figure 12, the small shaded circles A and B represent the conductors of a parallel wire line shown in cross section. At a given instant, a point along conductor A will be positive and the corresponding point on B will be negative. At this instant, the electric and magnetic fields about these points will be as indicated by the solid and dashed lines, respectively. Here, the instantaneous direction of current is assumed to be into the page at conductor A and out of the page at conductor B.

As shown by the arrows, the electric lines of force travel from A to B, while the magnetic lines move counterclockwise around A and clockwise around B. Thus, at every point where they cross, the electric lines are perpendicular to the magnetic lines, and both are perpendicular to the direction of current in the conductors. During succeeding instants, these fields travel along the line, and since they are produced by the moving charges or currents in the wires, they follow the current path, whether curved or straight.

At various points along any one conductor of a transmission line, the current is in different directions as indicated by the arrows drawn in the conductors (A) and (B) of Figure 13A. Also, at the corresponding points (1), (3), and (5), the currents are in opposite directions in the two conductors. The vertical lines represent the electric field between the conductors, and as the arrows on these lines indicate, at points (1) and (5) the conditions are like those illustrated in Figure 12. At point (3), the conditions may be illustrated by reversing the direction of the arrows on all the lines in Figure 12.

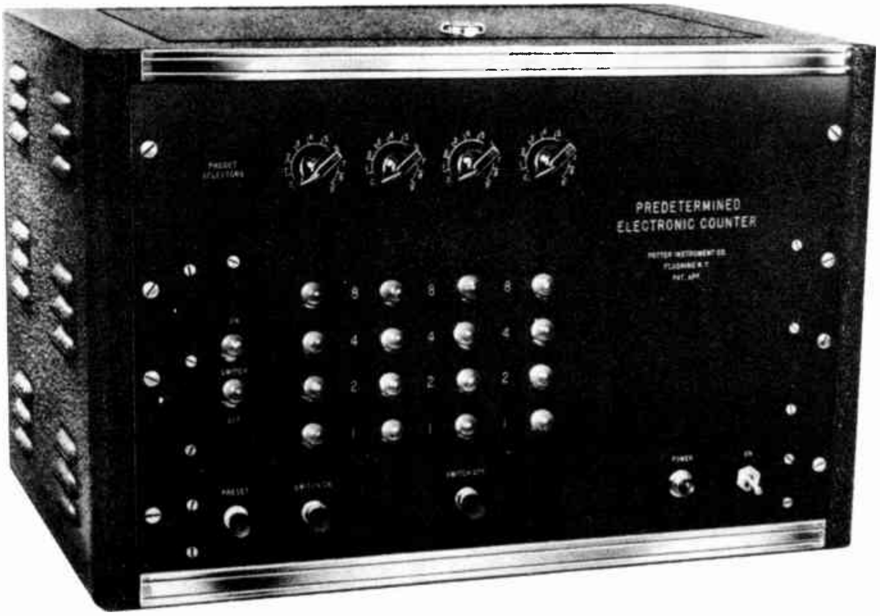

Nuclear instruments employ RCL networks to provide the necessary pulse response.
Courtesy Potter Instrument Co.

Figure 13A indicates conditions at a single instant of time when the currents are zero at points (2) and (4). However, the currents are changing constantly in magnitude, and a certain interval later, will be zero at points (1), (3), and (5). At this later moment, the conditions at points (2) and (4) will be like those illustrated at points (1) and (3) respectively. At a third time, the currents will be zero at points (2) and (4) again, and the fields will have maximum strength at points (1), (3), and (5), but their respective directions will be opposite to those shown.

Thus, due to the changing magnitudes and directions of the currents at various points along the conductors, the regions of maximum and minimum field strength travel along the transmission line in the direction of energy transmission. At the end of a given period of time, conditions again will be as shown in the Figure 13 and the entire series of events occurring during the interval are called a cycle. Thus, the number of cycles which occur each second depends upon the velocity at which the energy travels down the line, and upon the distance between any points, such as (1) and (5), at which like conditions exist.

In Figure 13B, the sine curve indicates the amplitude and direction of the conductor currents and the electric fields at successive points along the line of Figure 13A. However, this curve indicates the conditions at one particular instant only, and it must be moved from the left to right along its horizontal axis to represent the changes which occur with time as the transmitted energy travels along the line. The conductor current and field intensity variations occur in periodic manner, thus it is customary to consider the energy as being transmitted in waves along the line. The wave length is the distance between any point and the next along the line at which the instantaneous conditions are identical, such as between successive peaks of maximum field intensity in the same direction as indicated at points (1) and (5) in Figure 13.

Indicated by the arrows in the conductors of Figure 13A at the instant shown, the currents have maximum magnitudes at points (1), (3), and (5). Also, as indicated by the concentration of the electric field lines, the difference of potential or voltage between the conductors is greatest at these same points. Thus, in the case illustrated, the voltage and current waves are in phase.

For most transmission line applications, this in-phase condition is desirable. The frequency of the waves designates the number of complete waves which pass a given point each second. Therefore, in the case of higher frequencies, more waves pass any given point each second than those of lower frequency. The wave velocity is the same for all frequencies in a given medium such as a transmission line, but the higher frequencies have shorter wavelengths. Thus, with relatively short wavelengths, a larger number of high frequency waves can pass a given point each second, even though their velocity is the same as the lower frequency waves.

When electromagnetic energy waves are traveling in free space, their wavelength is given by the expression:

$$\lambda = \frac{c}{f}$$

where:

λ = wavelength in meters

f = frequency in cycles per second

c = velocity of light in vacuum (approximately 300,000,000 meters per second).

However, in any other medium, such as a transmission line, the velocity v of electromagnetic waves is less than the free space velocity c. Thus for waves of the same frequency f, the wavelength λ' in a transmission line for example is given by,

$$\lambda' = \frac{v}{f}$$

These equations can be rearranged to read $f = c/\lambda$ and $f = v/\lambda'$.

Since quantities which are equal to the same quantity are equal to each other:

$$\frac{v}{\lambda'} = \frac{c}{\lambda},$$

and this may be inverted to give:

$$\frac{\lambda'}{v} = \frac{\lambda}{c}.$$

Finally, multiplying both sides by v gives:

$$\lambda' = \left(\frac{v}{c}\right) \lambda$$

Since v is some positive number between zero and c, the factor v/c is always some fraction between 0 and 1. Therefore, this last equation shows that the wave length in the transmission line is always less than when in free space.

Nonresonant Lines

When a transmission line is terminated in a resistive load R, equal to the characteristic impedance Z_o of the line, the current and voltage waves will remain in phase for the entire length of the line. In this respect the line acts as though it had infinite length, as indicated in Figure 14A. Of course, some loss in the line, causes each succeeding peak of current and voltage to have less magnitude than the preceding peak. For example, if a voltage indicator is employed to measure the alternating voltage at various points along the line, it is found that the voltage decreases gradually with distance from the source as shown by the solid line curve of Figure 14B.

However, all the energy that finally reaches the end of the line is completely absorbed by the load. A transmission line operated in this manner, that is, terminated with a resistor R equal to Z_o, is known as a NONRESONANT LINE.

A hi-low television antenna. To effect greatest transfer of energy from antenna to receiver, the impedances of the antenna, transmission line, and receiver input must be matched.

Courtesy American Phenolic Corp.

Resonant Lines and Standing Waves

A line which is not terminated by a resistance equal to its characteristic impedance is called a RESONANT LINE. When the transmitted waves reach the end of a resonant line, the energy is not absorbed completely by the load, but some is reflected back toward the source. At any point along the line, the voltage and current magnitudes are equal to the algebraic sum of the outgoing and reflected waves at that point. Because both waves at any given point move with the same speed but in opposite directions, the algebraic sum of the waves is always the same. That is, at certain points along the line, the voltage E and the current I are minimum at all times, and midway between these points E and I rise alternately to maximum in one direction and then in the other. As they do not move along the line, these variations of E and I along the length of the line are known as **standing waves.**

Figure 15 illustrates two possible conditions which result in standing waves. The curves of Figure 15B show the location of the standing waves for voltage when the line of Figure 15A is terminated in a resistance R which is greater than Z_o. Since these curves are to illustrate only the standing waves, for simplicity both positive and negative alternations are drawn upward on the graph. The right hand end of the graph indicates the voltage at the load terminals.

As shown in Figure 15B, when the voltage at the load terminals on the right end is greater than the input voltage on the left hand end, the load resistance R is greater than the characteristic line impedance Z_o. In a similar manner, when the voltage across the load is less than the input voltage, as shown in Figure 15C, the load resistance R is less than the line impedance Z_o.

Standing Wave Ratio

In both Figures 15B and 15C, the vertical E scale indicates the voltage standing wave rises to a maximum of 20 volts, and at the nodes or minimum points the voltage is equal to 5 volts. The ratio of the maximum to the minimum voltage is called the **standing wave ratio,** abbreviated SWR. As an equation:

$$\text{SWR} = \frac{E_{max}}{E_{min}}.$$

When the terminating load is primarily resistive in nature, the SWR indicates the mismatch between the line and load impedances. For example, in Figures 15B and 15C, the SWR = 20/5 = 4. Thus, for Figure 15B, $R = 4 \times Z_o$, while for Figure 15C, $R = 1/4$ of Z_o. However, in cases where the load has an appreciable reactive component, the standing wave ratio is only a rough approximation of the impedance mismatch.

Effect of Line Termination

When the outer end of the line is shorted, as shown in Figure 16A, the standing wave voltage is minimum and the current maximum at the shorted end. To indicate this, in Figure 16B, the voltage is represented by the solid line and the current by the dashed line curves.

At any point along a transmission line, the impedance Z is equal to E/I. In the case of nonresonant line, the ratio of voltage-to-current is the same at all points, although both voltage and current decrease with distance from the source. Therefore, in this line, E/I is a constant equal to the characteristic impedance Z_0 at all points along the line.

In the case of a resonant line, the ratio E/I varies from point to point, and therefore, line impedance Z_0 also varies. For example, with the shorted line of Figure 16A, the voltage is minimum at the short, and the current maximum. Thus, calculated from the ratio E/I, Z is minimum at the shorted end. However, as shown in Figure 16B, at a point located one-quarter wavelength back from the shorted end, E is maximum and I is minimum. Therefore, at this point on the line, $E/I = Z$ is maximum.

The transmission line of Figure 17A is open at the end, with the resulting standing wave conditions shown by the solid line voltage curve and dashed line current curve in Figure 17B. In this case, the current is minimum at the open end, and the voltage maximum. Thus, the impedance Z is maximum at the end of an open line. At a point one-quarter wavelength back from the open end of the line, E is minimum and I maximum, thus $E/I = Z$ is minimum at this point.

In Figure 18A, the transmission line is terminated by a capacitive load, and as shown in Figure 18B, the voltage at the load is between the maximum and minimum values of the standing wave. In fact, the voltage across C varies inversely with its capacitance. As the capacitance is reduced, the voltage at the load increases, and the standing wave moves toward the left in Figure 18B, thus approaching the conditions in the open end line of Figure 17B.

A line terminated by an inductive load and the resulting voltage standing wave are illustrated in Figure 19. In this case, the voltage varies directly with the inductance of coil L, and has some value between the maximum and minimum of the standing wave. As L is decreased, the voltage at the load end of the line decreases also, and the standing wave shifts toward the left on the graph to approach the shorted line conditions of Figure 16B.

CHARACTERISTICS OF LINE SECTIONS

Because of the change in impedance produced by the standing waves along shorted and open ended transmission lines, as explained for Figures 16 and 17, different lengths or "sections" of such lines are employed as various types of circuit elements in electron equipment. Such sections vary in length, and should not be confused with the extremely short "theoretical sections" mentioned above in connection with Figure 10. As an example, it was mentioned that at a point one-quarter wave from the shorted end of a line, the impedance Z reaches a maximum. In fact, if the line losses are low, this maximum Z is extremely high.

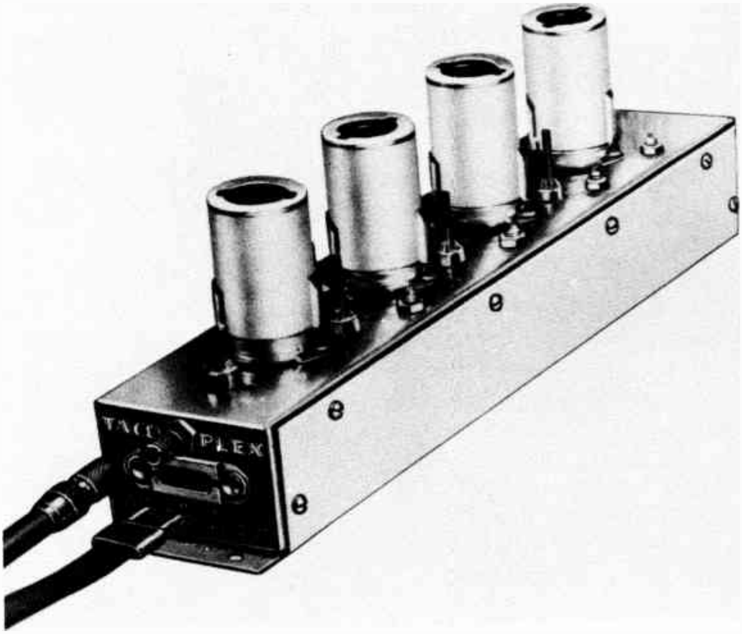

Where signal losses become excessive in antenna systems using long transmission lines, an amplifier may be placed in the line to increase the signal. This unit provides connections for both coaxial and twin lead transmission lines.
Courtesy Technical Appliance Corp.

Since this condition is like that at the terminals of a parallel resonant circuit, a shorted line section of one-quarter wavelength is the equivalent of a parallel resonant circuit. Like the resonant circuit, the shorted quarter-wave section has this very high impedance at a single frequency only, this frequency being that at which the line length is equal to a quarter-wavelength ($\frac{1}{4}\lambda$) of the signal applied to the input terminals of the line.

Such a shorted section is illustrated in Figure 20A. Here x and y are the input terminals, and D is the length of the line section. Thus, as indicated by the arrow, when "looking into" the line at the input terminals, the impedance which is "seen" depends upon the length D relative to one-quarter wavelength of the signal applied at x and y. As mentioned, the impedance seen at x and y is very high when D is equal to ¼ λ.

Referring again to Figure 16B, when the length D of the line section is less than ¼ λ, the impedance Z seen at terminals x and y of Figure 20A is some value E/I between maximum and minimum. Also, in this region, the voltage standing wave curve is like that at the extreme right end of the line in Figure 19. Therefore, at its input terminals, a shorted section which is less than ¼ λ long "looks" like an inductance.

When the shorted section is greater than ¼ λ in length, again the impedance at its input terminals is between maximum and minimum, and the voltage standing wave is like that at the end of the line of Figure 18. Thus, at its input terminals a shorted section with length D greater than ¼ λ looks like a capacitance.

When the length D, Figure 20A, is equal to one-half wavelength, Z is minimum, and the section acts like a series resonant circuit. Similar equivalent conditions exist in the case of the open ended line section of Figure 20B. Here, looking in at terminals x and y the impedance is very low, nearly zero, when D is equal to ¼ λ, therefore, the line section is equivalent to a series resonant or a short circuit. On the other hand, when D is equal to ½ λ, the impedance is very high, and the section is equivalent to a parallel resonant or an open circuit. An open section looks like a capacitance at its input terminals if its length D is less than ¼ λ, but if D is between ¼ λ and ½ λ, the input terminals present an impedance which looks like an inductance.

Figure 20C shows a line section which is terminated by a simple or complex circuit element of impedance Z which provides conditions other than an open or short at that end of the line. In this case, the impedance seen at x and y depends not only on the length of the section, but also upon the nature of Z. For various section lengths and terminations, Table 1 lists the type and relative magnitude of the impedance which is presented to the signal applied to the input terminals x and y of the line sections of Figure 20. The listed terminations consist of opens, shorts, and resistances greater than, equal to, or less than the characteristic impedance Z_0 of the line.

As the table shows, a quarter-wave section "inverts" the load impedance such that the opposite magnitude is presented by the in-

TABLE 1

Length of Line	With Line Load End Terminated in	At Input the Line looks like a
Less than $\frac{1}{4}\lambda$	Open	Capacitance
	R greater than Z_o	Capacitance and resistance in series
	R equal to Z_o	Resistance equal to Z_o
	R less than Z_o	Resistance and inductance in series
	Short	Inductance
$\frac{1}{4}\lambda$	Open	Short, or series resonant circuit
	R greater than Z_o	Resistance less than Z_o
	R equal to Z_o	Resistance equal to Z_o
	R less than Z_o	Resistance greater than Z_o
	Short	Open, or parallel resonant circuit
Between $\frac{1}{4}\lambda$ and $\frac{1}{2}\lambda$	Open	Inductance
	R greater than Z_o	Inductance and resistance in series
	R equal to Z_o	Resistance equal to Z_o
	R less than Z_o	Capacitance and resistance in series
	Short	Capacitance
$\frac{1}{2}\lambda$	Open	Open
	R greater than Z_o	Resistance equal to R
	R equal to Z_o	Resistance equal to Z_o
	R less than Z_o	Resistance equal to R
	Short	Short

put terminals. A half wave section presents the same impedance at the input as is provided by the termination at the load end of the line. When the termination is a resistance R greater or less than Z_o, the other sections present input impedance with a reactive component. In all cases, the input impedance is Z_o when R is equal to Z_o. If a line having length equal to some multiple of a half wavelength is added to any of the above transmission line sections, the impedance characteristics at the input terminals are the same as the input of the original section.

APPLICATIONS OF LINE SECTIONS

Because of their electrical equivalence to various circuit elements, transmission line sections are employed wherever the ordinary lumped type elements are impractical, such as in VHF, UHF, and SHF equipment. Technically, these sections could be employed in lower frequency circuits also, but are impractical because of their excessive lengths. Of course, there is a border line frequency band in which either the line section or lumped type circuit elements may be used, and the choice must be determined by other design factors.

Line sections are employed as tank circuits in oscillator, amplifier, and converter stages. Also, they are used as series or parallel resonant circuits for "tuning out" or wave trap purposes. A section may be employed as a transformer to match the impedance of a source to that of a load. Other uses include filters, phase and impedance converters, switching circuits, insulators, connecting balanced circuit to unbalanced circuit, and making standing wave measurements.

DELAY LINES

For any type of transmission line, it takes a short but definite time for a given applied signal to travel from one end of the line to the other. This fact is made use of in electron applications in which it is necessary to delay the signal by some time interval, and a transmission network used for this purpose is known as a **delay line.** Delay lines are employed as part of pulse generating circuits, for delaying pulses, and as a means of obtaining the desired pulse waveform. In these applications, usually the delay time (t_d) is on the order of 10 microseconds or less.

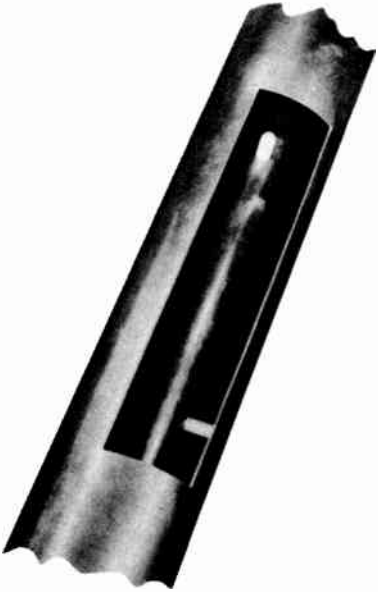

A cutaway view of a concentric transmission cable. The smaller conductor is mounted in the center of the larger and is held in place by insulating spacers. The diameter of this cable is 6⅛ inches.

Courtesy Andrew Corporation

As explained previously, unless a transmission line is terminated by resistance equal to its characteristic impedance Z_o, energy will be reflected at the load or receiving end and travel back along the line to the sending end. Also, unless the signal source impedance is equal to Z_o, the reflected energy will be reflected at the sending end and travel toward the receiving end again. For delay lines, reflection from the receiving or load end of the line is desirable, and to prevent distortion of pulse type reflected signals, this reflecting end either must be open, shorted, or terminated in pure resistance R_L.

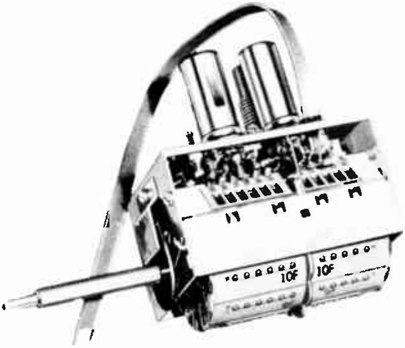

The 300 ohm twin lead transmission line is terminated in its characteristic impedance in the television tuner.

Courtesy Standard Coil Products Co.

The magnitude of the reflected energy relative to that applied to the input end of the line may be expressed in terms of the **coefficient of reflection** (K), which is defined as the ratio of the difference to the sum of the characteristic impedance Z_o of the line and the terminating load resistance R_L. That is:

$$K = \frac{R_L - Z_o}{R_L + Z_o}.$$

When the line is shorted at the load end, $R_L = 0$, and K is equal to -1, all the energy is reflected, but the reflected signal is inverted, or shifted in phase by 180°. For a sine wave signal, this condition is illustrated in Figure 21A where the solid sine curve represents the waves traveling from the input end of the line toward the load R_L and the dashed curve represents the reflected waves. The same conditions are shown in Figure 21B where the signal consists of a series of rectangular pulses.

When the line is terminated in resistance less than Z_o, the same phase relations exist as shown in Figures 21A and 21B, but the reflected waves or pulses have less amplitude. When $R_L = Z_o$, all the energy is transferred to the load and there is no reflection since $K = 0$.

When the load consists of resistance greater than Z_o, then some energy is absorbed by R_L and some reflected, but the reflected waves or pulses have the same polarity as before reflection. That is, reflection at the load occurs without inversion of the signal. Finally, all the energy is reflected without inversion when the line is open at the load end. Then R_L is equal to infinity, and K is equal to $+1$. For pulse signals, this condition is illustrated in Figure 21C where the reflected (dashed line) pulses are shown returning back along the transmission line with the same polarity as the incoming pulses.

For many applications, an impractical length of ordinary transmission line would be required to obtain the needed delay time t_d. In such cases, it is common practice to substitute an artificial line consisting of a series of LC sections as shown in Figure 22. Here, each section corresponds to the sections of a real transmission line, having series inductance and shunt capacitance as explained for Figure 10. Thus, whereas Figure 10 shows how an actual transmission line is equivalent to a series of similar RCL networks, Figures 10 and 22 may be compared to show that an artificial line, containing lumped L and C components, is basically like a real line in which R and G are negligibly small.

Each section of an artificial line is composed of an inductance L and capacitor C connected in the form of an L-section low-pass filter, as shown in Figure 23. Since the characteristic impedance of a line is equal to the impedance of each elementary section, the characteristic impedance Z_o of the artificial line of Figure 22 is given by:

$$Z_o = \sqrt{\frac{L}{C}}$$

when L is the inductance and C the capacitance of each elementary section.

The delay time t_d required for a signal impulse to travel from one end of the line to the other may be calculated from:

$$t_d = N\sqrt{L \times C}$$

where N = the number of LC sections and L and C again are the inductance and capacitance of the section.

However, as described in an earlier lesson on filters, the network of Figure 22 also operates as a multi-section low-pass filter, with a cut-off frequency f_c given by:

$$f_c = \frac{1}{\pi\sqrt{LC}}.$$

Thus, all signal frequencies below f_c are transmitted with practically no loss in the line, but all above f_c are sharply attenuated.

When a sine wave voltage of frequency f is impressed on a delay line, the voltage wave travels down the line with little attenuation (with f less than f_c), but a phase shift of angle $\theta = 2\pi f t_d$ occurs where t_d is the delay time. When the signal consists of a rectangular pulse like that of Figure 1A, the pulse appearing at the output terminals of Figure 22 will have a sloping leading edge with rise time t_r given by:

$$t_r = 1.1\sqrt[3]{N} \times \sqrt{LC}$$

where N is the number of elementary LC sections making up the artificial delay line and L and C

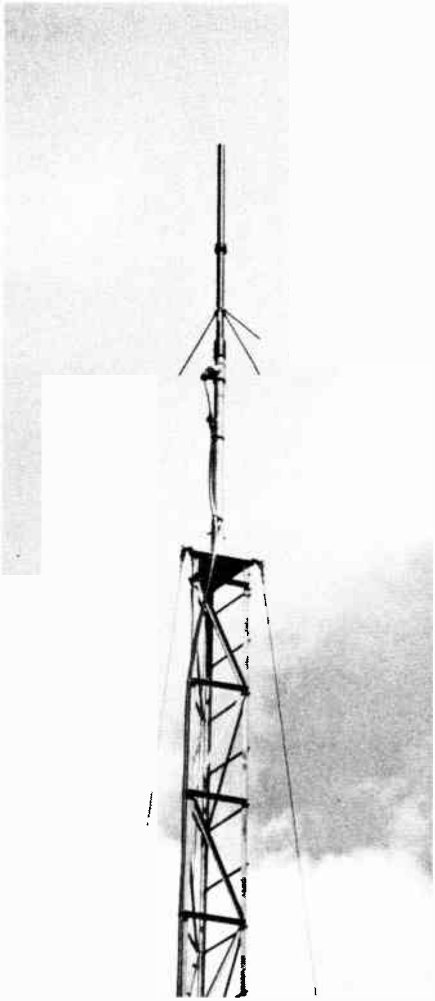

A transmitting antenna of the type used in radio communication. Observe the antenna feed transmission line attached to the tower.

Courtesy Wind Turbine Co.

the inductance and capacitance, respectively per section. Since the action of the line in increasing the rise time t_r is undesirable, and a long delay time t_d is desirable, the ratio t_d/t_r expresses the figure of merit for a given delay line. In general, the best figure of merit can be realized by using a large number of sections.

Practical delay lines take two forms: the artificial line made up of lumped L and C sections as in Figure 22, and the "smooth" type in which the inductance is provided by a single continuous winding covered by a dielectric coating and an outer metal cover to provide the capacitance. The construction of the smooth line is shown in simple pictorial form in Figure 24A, and its diagrammatic representation in Figure 24B.

A second type of smooth delay line is illustrated in Figure 25. This arrangement is called a balanced line and consists of two windings wound in opposite directions and insulated by a dielectric. Thus part of the inductance is in each side of the circuit, and the capacitance exists between the two insulated windings. For a given delay time, this type of line has about one-half the d-c resistance of a single sided line.

When the required delay time, maximum permissible pulse rise time, and required characteristic impedance are known, the needed component for an artificial delay line can be calculated by selecting some optimum value of N (such as 10) and employing the equations given earlier in this lesson.

In the case of smooth delay lines, usually the inductance and capacitance are stated in terms of some unit length such as one foot. Thus, for these lines, the equations are still applicable when L = inductance in henrys per foot, C = capacitance in farads per foot, and N = the length of the line in feet. When commercial delay lines are employed, a type having the desired characteristic impedance is selected, and the required delay time obtained by using as many units as necessary.

* * *

IMPORTANT DEFINITIONS

ATTENUATION FRACTION—(p)—The fraction by which the signal is reduced for each step of an attenuator network.

COEFFICIENT OF REFLECTION—(K)—The ratio of the difference and the sum of the characteristic and terminating impedance of a line.

CHARACTERISTIC IMPEDANCE—(Z_o) The impedance which a transmission line has due to its distributed properties of inductance, capacitance, and resistance.

DELAY LINE—A section of real or artificial transmission line, the purpose of which is to delay a given signal by some desired interval of time (t_d).

FALL TIME—(t_f)—The interval of time required for a voltage or current pulse to decrease from 90% of its maximum value to 10% of maximum.

FLAT TOP—The portion of a pulse which exists during the interval between the rising front and descending back.

LEADING EDGE—The portion of a pulse during the interval in which it is increasing from minimum to maximum. The rising front.

RISE TIME—(t_r)—The interval of time required for a voltage or current to increase from 10% to 90% of its maximum.

STANDING WAVES—Stationary waves formed on a transmission line due to the addition of the incident and reflected waves.

STANDING WAVE RATIO—(SWR)—Ratio of peak to minimum voltages along a mismatched line.

SURGE IMPEDANCE—See characteristic impedance.

TRAILING EDGE—The portion of a pulse during the interval in which it is decreasing from maximum to minimum.

TRANSMISSION LINE—A set of conductors employed to transmit signal energy or current from one point to another.

STUDENT NOTES

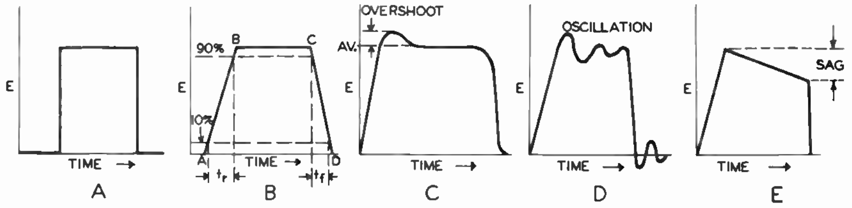

FIGURE 1

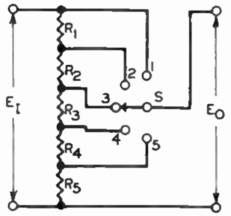

FIGURE 2

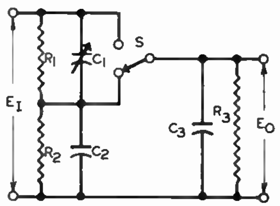

FIGURE 3

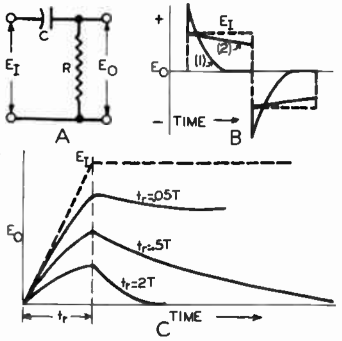

FIGURE 4

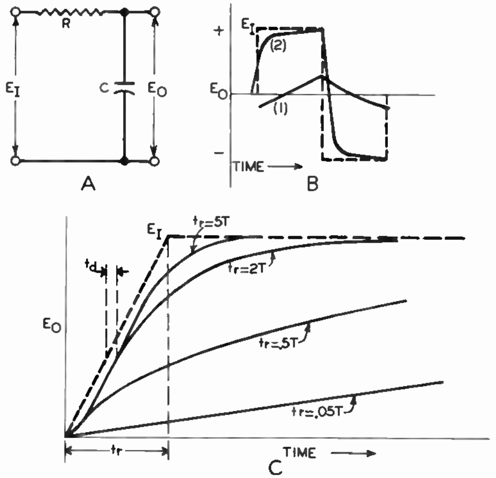

FIGURE 5

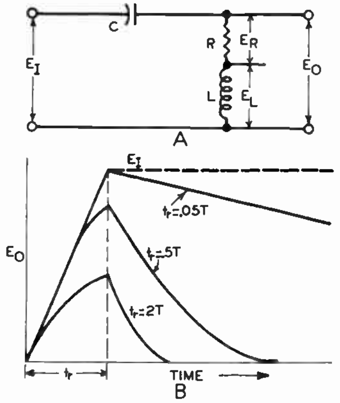

FIGURE 6

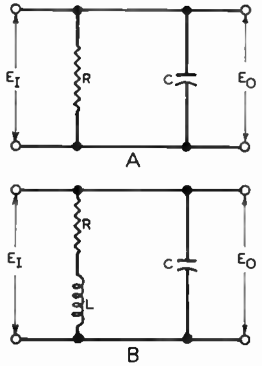

FIGURE 7

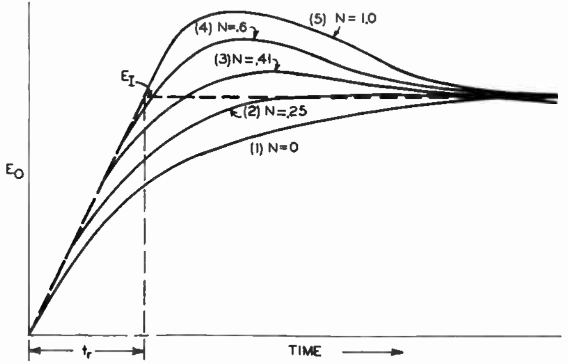

FIGURE 8

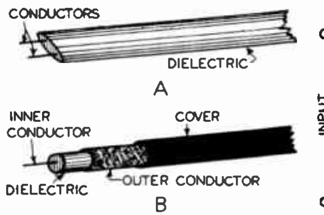

FIGURE 9

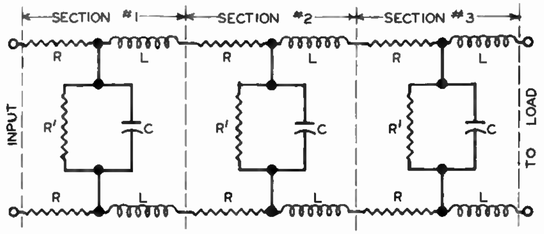

FIGURE 10

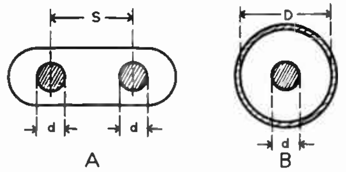

FIGURE 11

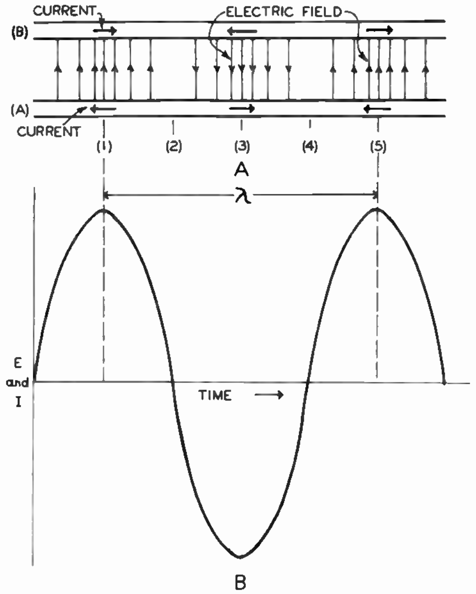

FIGURE 13

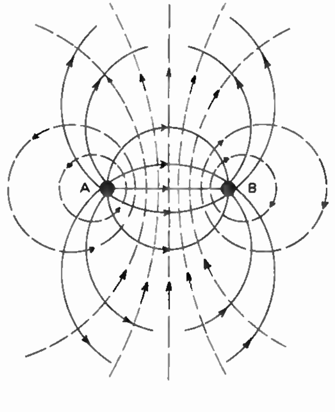

FIGURE 12

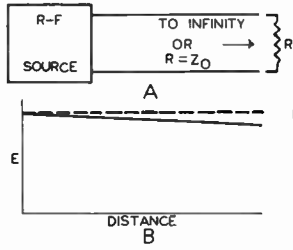

FIGURE 14

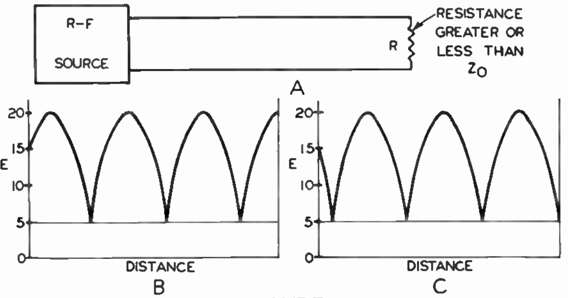

FIGURE 15

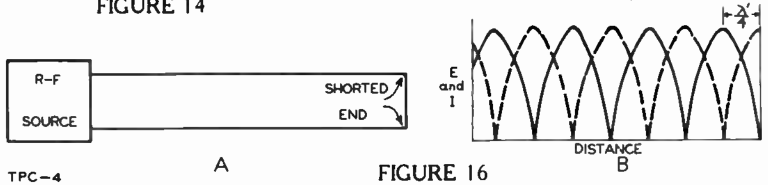

FIGURE 16

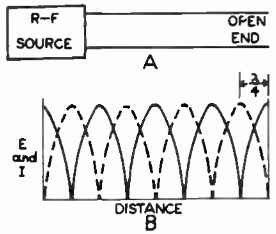

FIGURE 17

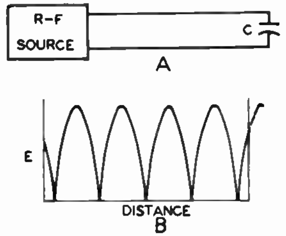

FIGURE 18

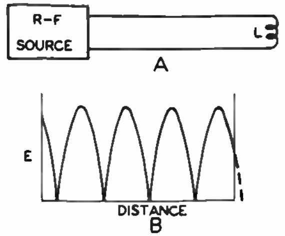

FIGURE 19

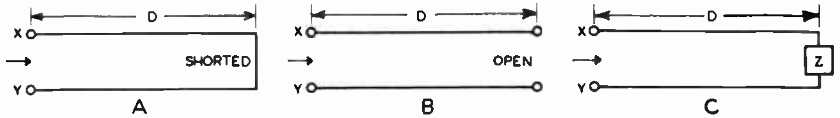

FIGURE 20

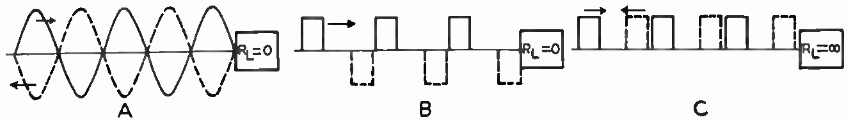

FIGURE 21

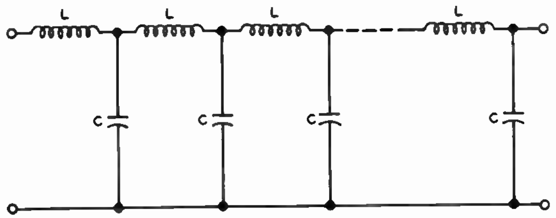

FIGURE 22

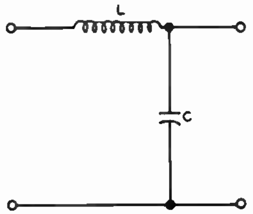

FIGURE 23

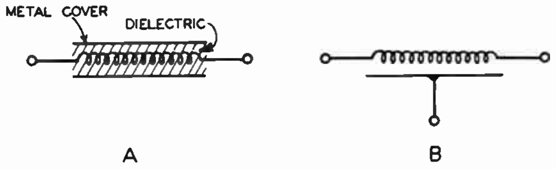

TPC-4 FIGURE 24

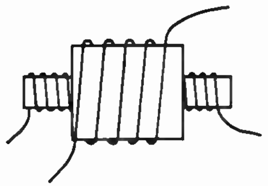

FIGURE 25

Cut along this line and send in for grading

DE FOREST'S TRAINING, INC.

SPECIALIZED SCIENTIFIC AND PRACTICAL INSTRUCTION

2533 NORTH ASHLAND AVENUE CHICAGO 14, ILLINOIS

QUESTIONS

11

How many advance Lessons have you on hand?..................................

Print or use Rubber Stamp.

Name.. Student No.....................................

Street...Zone......................... Grade.................................

City...State................................ Instructor.........................

Write your answers on the "Ans." line below each question. If more space is needed use reverse side of this page.

1. Is the RC time constant relatively short or long in order for a high pass network to transmit a pulse faithfully?

Ans...

2. Is the t_r/T ratio relatively large or small in order for a low pass network to transmit a pulse with minimum distortion?

Ans...

3. Compared to a simple RC circuit, what is the effect on the output voltage by placing an inductor in series with the resistor?

Ans...

4. What are the two basic types of transmission lines?

Ans...

5. What four physical factors determine the characteristic impedance of a transmission line?

Ans...

6. What is meant by a nonresonant line?

Ans...

7. When the terminating load of a transmission line is primarily resistive, what does a standing wave ratio indicate?

Ans...

8. To what may a shorted $1/4\lambda$ line section be compared?

Ans...

9. What characteristic is exhibited by a shorted length of line less than 1/4 wavelength?

Ans...

10. What is meant by a delay line?

Ans...

FROM OUR *President's* NOTEBOOK

ENTHUSIASM

My Aunt Alice was a woman of unbounded Enthusiasms. She'd doubtless have lived many more than the sixty years she did live had she not spent half a century and all her strength bounding from one object of her enthusiasm to another.

I can recall her Enthusiasms for horse-back riding, dahlia-raising, cooking, golf, antique collecting, swimming, needle-point, bird-watching, stamp-collecting, china painting—and goodness knows how many other things. But the sad thing about her life was that she never baked a really Good Pie, never finished a Doily, never did any **one thing** exceptionally well for all her great zest for whichever of her hobbies engaged her at a given moment.

Enthusiasm is a quality which is of most value to us when funneled into single specific activities for periods long enough to accomplish results. Some of it we can spare for a hobby or two, but it's greatest worth is found in directing it at that which brings us in our daily bread.

Yours for success,

E. B. DeVry

PRESIDENT

PRINTED IN U.S.A

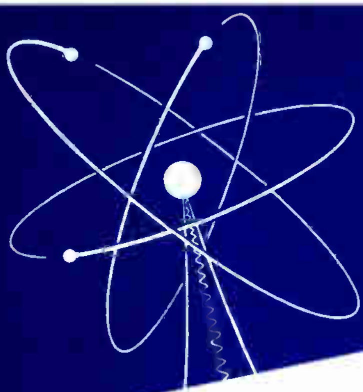

PULSE GENERATORS

Lesson TPC-5

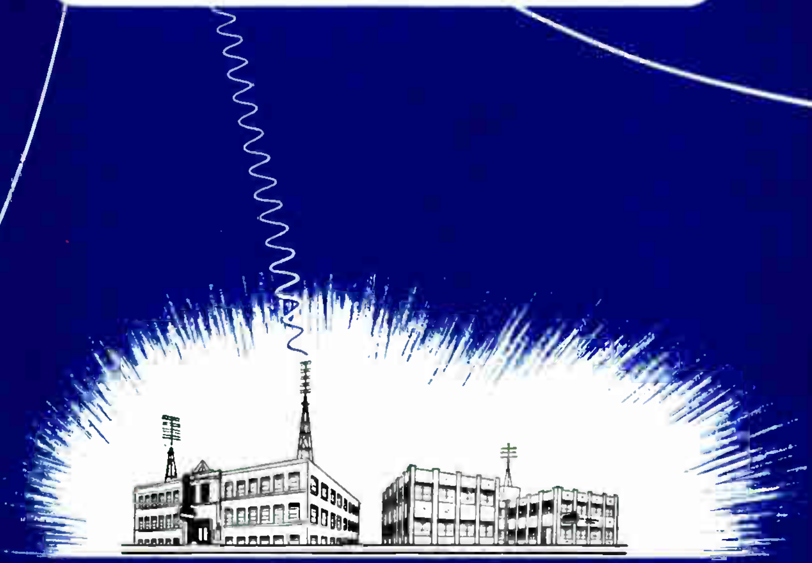

DE FOREST'S TRAINING, INC.
2533 N. Ashland Ave., Chicago 14, Illinois
Affiliated with DeVRY TECHNICAL INSTITUTE

Pulse Circuits

PULSE GENERATORS

DE FOREST'S TRAINING, INC.
2533 N. Ashland Ave., Chicago 14, Illinois
Affiliated with DeVRY TECHNICAL INSTITUTE

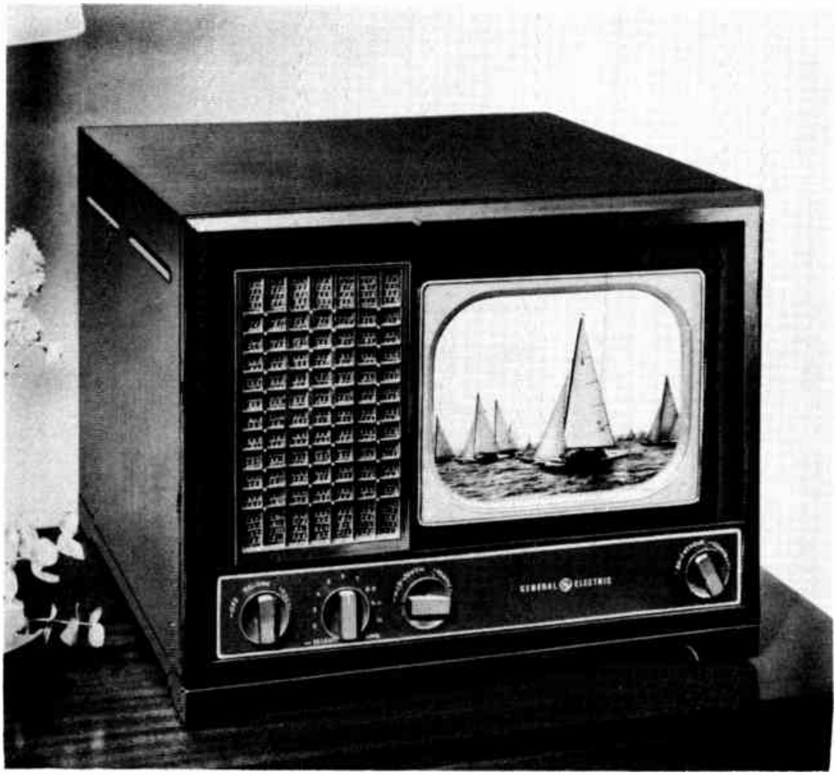

The modern television receiver often employs blocking oscillators and multivibrators to provide proper picture tube sweep voltages.

Courtesy General Electric Co.

Pulse Circuits

PULSE GENERATORS

Contents

Don't be content with doing your duty, do more than your duty. It is the horse that finishes a neck ahead that wins the race.

—Andrew Carnegie

PULSE GENERATORS

In television receiving and transmitting equipment, industrial instrumentation and control, and in certain instruments employed for making measurements of nuclear radiation, signal voltages of the pulse type are needed to provide proper circuit operation. Usually these pulses require a certain desired amplitude, duration, wave-form, some definite frequency of recurrence, or some particular time relationship with other signals in the same unit.

Electron circuit elements employed to generate these discontinuous or pulse type signals are known as **pulse generators.** Because their frequency can be controlled by a relatively low amplitude pulse applied to their input, pulse generators also are known as TRIGGER circuits.

Any electron tube circuit may be said to be in a stable state when the plate current or voltage remains constant, regardless of changes of voltages on the other electrodes, until the proper trigger pulse is applied. The constant plate voltage or current may have some specific d-c value, or it may be zero. Due to their circuit arrangement, pulse generators fall into the following three categories:

(1) circuits which have no absolutely stable state, but which oscillate continually between two temporarily stable states, regardless of whether triggering pulses are applied or not.

(2) those which can be made to pass back and forth between two stable states by the application of suitable triggering signals,

(3) those with one stable state in which they remain until a triggering signal causes them to pass into a temporary stable state in which they remain for a specific period of time and then return spontaneously to the original state.

RELAXATION OSCILLATORS

The first of the three listed types of pulse generators comprises a group of circuits known as **relaxation oscillators.** Unlike the sinusoidal oscillator, the operation of the relaxation oscillator is dependent partly upon the nature of the electron emission from the cathode of the tube, and therefore, its frequency of oscillation is not as stable as that of the sinusoidal type. However, the relaxation oscillator forms a source of pulse signals of relatively large amplitude, and may be employed as a free-running generator, or when a constant frequency is required, synchronized by means of some available periodic signal. In fact, the relaxation oscillator may be employed as a source of voltage pulses of some desired waveform, which have a frequency that is a submultiple of the frequency of an applied trigger signal. When so used, the oscillator is called a FREQUENCY DIVIDER.

The most common types of relaxation oscillators are: (1) the gas-filled arc tube; (2) the blocking oscillator; and, (3) the multivibrator. The multivibrator contains two tubes which are called the SCALING COUPLE when used for frequency dividing. All three types of relaxation oscillators are used in a number of practical applications. However, only their most basic function of producing voltage pulses is described in this lesson. In each case, the complete oscillator circuit contains one or more RC circuits which control the frequency of oscillation. For this reason, the basic action in RC networks will be reviewed briefly before the various oscillators are considered.

RC CIRCUITS

In the simple RC circuit of Figure 1A the direct voltage E of the battery is applied to resistor R and capacitor C in series when switch S is thrown to the position shown. Under these conditions, a flow of electrons in the direction of the arrows takes place until the capacitor is charged to a voltage E_c equal to E and with the polarity as indicated.

This charging action requires a period of time proportional to the resistance of R and capacitance of C, and occurs at an exponential rate such that during a time $T = RC$, the capacitor charge is increased by 63.2% of the total change that can occur. Each time constant T, in seconds, is the product of resistance R in ohms and capacitance C in farads, or R in megohms and C in microfarads.

The curve in Figure 1B shows the changes of the capacitor charging rate over a period of time equal to 5T. Here, in per cent of the applied voltage E, the capacitor voltage E_c is plotted against time in time constants. Assuming C is discharged completely at the beginning of the action, E_c is equal to 63.2% of E one time constant after the switch is closed. At the end of two time constants, E_c is 86.5% of E, 95% after three, about 98% after four time constants, and 99% of E at the end of the fifth time constant. Thus, for practical purposes, the capacitor charges completely in a period of time equal to 5T or 5RC.

Any time after the capacitor has charged to some given voltage E_C, when the switch S of Figure 1A is thrown to the up position, the battery is disconnected and the active circuit is as shown in Figure 1C. Here, the charge E_C is the only voltage source in the circuit, and electrons flow in the direction of the arrows to leave the negative plate of C and enter the positive plate, thus discharging the capacitor. As shown by the curve of Figure 1D, the capacitor is discharged down by 63.2% to 36.8% of its initial charge E_c, during the first time constant. During the following four time constants, E_c decreases to 13.5, 5.0, 1.8, and 0.7 per cent, respectively, of its initial charge. Therefore, the capacitor may be said to discharge completely after a period equal to 5T, or 5RC.

For the action of Figures 1C and 1D, the voltage E_I represents the charge on the capacitor plates at the instant the switch is thrown to the position shown in Figure 1C. Thus, E_I may be equal to or less than the battery voltage E, depending upon how long the switch was left in the position of Figure 1A. For example, if switch S is set to connect the battery for a period equal to 2T, and then set to discharge the capacitor, the initial capacitor voltage E_I is equal to 86.5% of E at the beginning of the discharge action. After one time constant, the capacitor voltage will have reduced to 36.8% of 86.5% of E, or to about 31.8% of E_I.

To draw the complete charging curve of Figure 1B, it was assumed that capacitor C was completely discharged to begin with. However, in a practical electron circuit, a capacitor has some initial charge, and then is charged or discharged further due to a change in the applied voltage. For such cases, the curves of Figures 1B and 1D represent the way in which the capacitor voltage changes from a lower to a higher value, or from a higher to a lower voltage.

For example, when circuit conditions are such that a capacitor has a voltage E_c equal to the applied voltage E_a, neither a charge nor discharge of the capacitor takes place. However, if E_a is increased suddenly, the capacitor will begin charging toward this new higher value. The total change of capacitor voltage which can occur is the difference between the new value of E_a and the original value of E_c, and can be expressed as $E_a - E_c$. If the difference between E_a and E_c is E, then the curve of Figure 1B shows how the capacitor voltage E_c increases during a period of five time constants after the sudden increase of E_a.

On the other hand, if with E_c equal to an applied voltage E_a as above, E_a is reduced suddenly, the capacitor will begin discharging toward this lower value. The total change of capacitor voltage which can occur is the difference between the original capacitor voltage E_c and the new applied voltage E_a, expressed as $E_c - E_a$. When the RC circuit is shorted as in Figure 1C, the curve of Figure 1D shows how E_c reduces to zero.

However, if $E_c - E_a = E_I$ (the total change which can occur), then the curve shows how the capacitor voltage E_c decreases during a period of 5T seconds after the sudden decrease of E_a.

The relaxation type oscillator used in the oscilloscope supplies the necessary pulse voltage used for horizontal deflection of the cathode ray tube electron beam.

Courtesy Radio Corporation of America

GAS-FILLED TUBES

In every electron tube, when moving under the influence of an electric or magnetic field, electrons collide with atoms or molecules of whatever gas the tube contains. Those electrons which are moving with high speeds may have sufficient energy to dislodge shell electrons upon collision with the gas atoms. The dislodged electron and the incident electron both move away and leave the influence of a bombarded atom, which then is known as an ION. Since the atom, or ion, is left with a deficiency of negative charge, or an excess of positive charge, it is called a positive ion. Occasionally, neutral atoms collect or capture free electrons to become negative ions because of the excess of negative charge which they then have. This action of forming ions when atoms are bombarded by elementary particles such as electrons is known as **ionization.**

In the various types of high-vacuum tubes, ionization is undesirable, and very little occurs because of the very low gas density in such tubes. With low density, the molecules are far apart and the probability is small that a given electron will collide with many molecules, if any. However, certain tube types known as "gas-filled" tubes depend upon ionization for their proper operation, and in these tubes the gas density is relatively high. Depending upon their mode of operation, gas-filled tubes are classed as glow tubes and arc tubes. With regard to electrodes employed, the most common gas-filled tubes are those having diode and triode structures, and the ionizing medium used is mercury vapor or an inert gas such as neon, argon, or xenon.

Gas-Filled Diodes

Figure 2 shows a circuit for applying a voltage across the electrodes of the gas-filled diode D_1. Here, battery B and potentiometer P form the voltage supply, with the slider on P as the positive terminal. Although the two electrodes may have different sizes and shapes, in the symbol of tube D_1 the lower one is designated the cathode because it is connected through current meter M, to the voltage supply negative, and the upper one the anode because of its connection through R_L to the supply positive. Voltmeter V indicates the voltage across D_1 at any instant, and resistance R_L limits the circuit current.

The dot inside the tube symbol envelope indicates that the diode is gas-filled, and since no heater is indicated, it is known as the COLD-CATHODE DIODE type. This type of cathode does not provide electrons by thermionic emission, and conduction of current by the tube depends entirely upon other sources of electrons. If the gas or vapor contained no ions at all, it would be a perfect insulator, and there would be no conduction by the tube. However, no gas is absolutely ion free, because ionization is produced by cosmic rays, radiation from radioactive materials in the walls of containers, and by electrons freed from the walls by photoemission.

In the circuit of Figure 2, the voltage applied to the diode is zero when the slider is set at the "−" end of P. With zero applied voltage, as many ions of a given polarity reach one electrode of D_1 as reach the other. As the slider is moved toward the "+" end of P, the anode of D_1 is made positive with respect to the cathode, and the dislodged electrons move to the anode while the positive ions move to the negative cathode.

When the electrons reach the anode, they flow through the external circuit toward the supply positive. When the positive ions reach the cathode, they neutralize themselves by collecting free electrons from the cathode surface. To replace these, other electrons leave the supply negative and flow toward the diode cathode.

Thus, the migration of electrons and ions inside the tube results in the effect of current in the gas from cathode to anode, and an equal current is produced in the external circuit from the anode to the cathode. That is, due to ionization in the gas, the tube becomes a conductor when a voltage is applied across its electrodes.

The current meter M measures the circuit current which depends upon the rate of production of ions by the above mentioned causes, and upon the rate at which they are "swept away" by the applied voltage. Figure 3 shows the current-voltage characteristic curve of tube D_1 of Figure 2. As the applied voltage, measured by meter V, is increased from zero, more and more ions are attracted by the electrodes of the tube to produce the rise in current as shown between points O and A on the curve. At point A, the voltage across the tube is such that all ions produced are swept out of the gas as soon as they are formed. This situation is called saturation, and thus there is no increase in circuit current as the voltage is raised from its value to A to that at point B. Usually on the order of a few microamperes, this small current produces no appreciable radiation of light or other electromagnetic energy and is termed the DARK CURRENT.

As the applied voltage is increased above point B, the electric field accelerates some of the free electrons in the gas to a velocity which permits them to produce more ions as a result of collisions with gas atoms. Thus, at voltages higher than that of point B, Figure 3, this additional means of ionization causes the current to increase again. Point B, at which this action starts, is called the IGNITION VOLTAGE.

Increasing the voltage to point C, still other sources of positive ions and free electrons are added, because the electric field between electrodes now has sufficient strength to accelerate the relatively heavy positive ions to a velocity great enough to cause ionization of any gas molecules with which they collide. In addition, the fast moving positive ions bombard the cathode with sufficient force to cause ejection of electrons from its surface. Thus, freed by these two means, the electrons are attracted toward the anode, and on their way produce more ionization in the tube.

As a result, the current begins to rise abruptly without further increase of voltage across the tube. Just before this rapid rise, point C indicates the THRESHOLD CURRENT of about two microamperes and

An inert gas thyratron of the type used in electronic control applications.

Courtesy Westinghouse Electric Corp.

also BREAKDOWN VOLTAGE. The heavy current produces a large voltage drop across limiting resistor R_L, and the voltage across the tube drops to point D. As shown between D and E, the current increases by a large amount with only slight changes of voltage. In this region, the current range may be as great as 50 ma. or more, and the ionization is accompanied by radiation of electromagnetic energy. Due to the visible portion of this energy, the action is called GLOW DISCHARGE.

Beyond point E, greater increases of voltage are required to cause the current to increase. However, when the voltage reaches F, a large number of positive ions form a cloud around the cathode which is called the SPACE CHARGE. The strong positive electric field of the space charge pulls many electrons out of the cathode so that the tube conducts current much the same as if it had an indirectly heated cathode.

Hence, the voltage drop across the tube decreases suddenly to point G, and then decreases gradually with current rise, as shown by the portion of the curve between G and H. At this stage, if it were not limited by resistor R_L, the current would rise until it destroyed the tube.

In the region from B to F, the operation is characterized by relatively low current with high voltage drop across the tube, and it is called a GLOW DISCHARGE. In the region beyond point G, the operation is characterized by high current and low voltage drop, and the discharge is called an ARC. Thus, the various glow and arc tubes are distinguished by the different portions of this characteristic curve in which they operate. However, a tube designed for practical use as a glow tube ordinarily cannot be employed as an arc tube simply by increasing the applied voltage until an arc occurs. The ion bombardment of the glow tube will raise the temperature to a point which will destroy the solid cathode. That is, practical cold-cathode type arc tubes must contain cathodes designed to withstand the ion bombardment.

In hot-cathode arc tubes, a heater element is employed to heat the cathode to provide thermionic emission, as in the high-vacuum tubes. In this case, mercury vapor or certain inert gases are used which permit ionization at applied potentials lower than that at which positive-ion velocity becomes so high as to deactivate or destroy coated cathodes. This "disintegration voltage" usually lies within the range from 20 to 25 volts. Such tubes will pass currents which exceed the cathode emission considerably, provided the very heavy currents last for time intervals too short to cause excessive cathode temperature.

Triode Arc Tubes

A grid serves as a convenient means of controlling the operation of hot-cathode arc tubes. Acting as a shield between the cathode and anode, the grid prevents cathode emitted electrons from entering the accelerating electric field between the grid and anode. Then, with specific potentials applied to the electrodes, the ionization of the gas cannot occur until electrons pass through the openings in the grid and are accelerated toward the anode. However, the presence of only a few electrons in the grid-anode space serve to "fire" the tube.

A negative operating voltage applied to the grid aids in prevention of firing, however the grid structure is important also. In fact, by proper design of electrode shape and spacing, the grid can shield the cathode so completely that a positive voltage must be applied to the grid to start the arc. Hence, there are positive-grid as well as negative-grid arc tubes.

In general, any grid-controlled, hot-cathode arc tube is known as a **thyratron.** The construction of a negative-grid type thyratron is shown in the cutaway view of Figure 4. Here, the cylindrical grid surrounds both the cathode and anode between which is supported the circular disk called the grid baffle. The baffle is part of the grid, and contains a central hole which provides the only path by which electrons can move from the cathode to the anode.

In use, a negative bias is applied to the grid of a tube like that of Figure 4 to prevent the tube from firing until the anode voltage has been increased to some definite positive potential. However, the anode potential required to produce ionization of the gas or vapor depends not only upon the grid bias, but, in the case of mercury vapor tubes, also on the temperature of the condensed vapor. For the tube of Figure 4, the curves of Figure 5 show the anode voltages required to fire the tube at various grid voltages, when the mercury vapor has temperatures of 40° and 80° centigrade.

Once the tube has fired, a cloud of positive ions forms around the negative grid. Called an ION SHEATH, this cloud destroys the ability of the negative grid to hold back electrons from the cathode, and therefore, the grid loses control of the electron stream, and except under unique conditions, this control cannot be regained except by reducing the anode voltage. That is, once the vapor or gas has ionized and the tube is conducting, conduction cannot be stopped merely by making the grid more negative. Exceptions occur where the grid is constructed with small openings, or where the external circuit components limit the anode current to small values.

THYRATRON PULSE GENERATOR

One application of a negative-grid thyratron for the generation of pulse voltages is illustrated by the circuit diagram of Figure 6. Here, the anode is adjusted to the desired operating voltage by means of variable resistor R_5, and the negative voltage E_{cc}, supplied to the grid through series resistor R_1, serves as the bias.

In operation, the B supply voltage is applied to R_5, R_4, and C_2 in series as shown, and capacitor C_2 charges as indicated by the curve of Figure 1B. Also, the B + voltage is applied to the series circuit consisting of R_5, R_4, R_3, C_1, and R_2. Resistors R_2 and R_3 are small, and therefore, in effect this circuit is a capacitance equal to the total of C_1 and C_2, in series with a resistance equal to the sum of R_4 and R_5. Thus, like C_2, C_1 charges at an exponential rate also, and both charge with their upper plates positive with respect to the lower plates in Figure 6.

Since the lower plate of C_1 is connected to the cathode of V_1, and the upper plate connects through R_3 to the anode, the voltage across the tube from cathode to anode is the same as that across C_1. Thus, with a fixed, negative voltage on the grid, the anode voltage of thyratron V_1 rises gradually as capacitor C_1 charges. During this time, the tube is held nonconductive by the negative bias, but when the anode voltage reaches the breakdown potential, the tube fires to become a low-resistance path for current.

With V_1 conductive, C_1 discharges quickly through the rela-

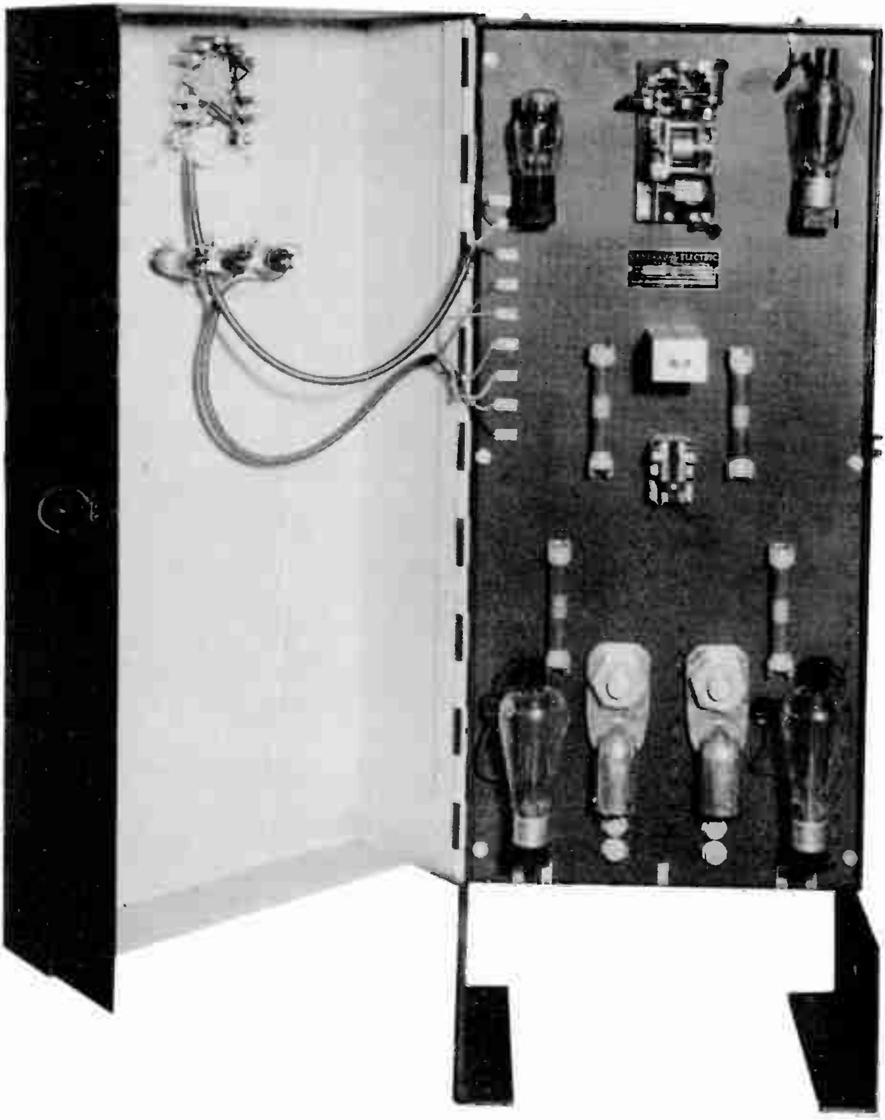

The gas filled thyratron employed in this spot-welding controller regulates the high current, short duration pulses needed.

Courtesy General Electric Co.

tively low resistance of R_3 and V_1 in series. Also, C_2 discharges through the low resistance of R_2 and V_1 in series. Because of the low resistances in the discharge circuits, the respective time constants are short, and both capacitors quickly discharge to low potentials.

As the voltage across C_1 reduces, the difference of potential applied between the anode and cathode of V_1 is decreased, and finally becomes too small to sustain the arc. When this condition is reached, the gas deionizes suddenly, and the tube stops conducting. With the tube nonconductive, the capacitors can discharge no further, and therefore, charge again through R_4 and R_5. This entire action continues to repeat itself so long as the various operating voltages are applied.

Since the discharge current of C_2 is carried by R_2, a voltage drop appears across it during the discharge period. Capacitor C_1 is considerably larger than C_2, although R_2 and R_3 are equal. Therefore, the discharge time constant of the $C_1V_1R_3$ circuit is longer than that of the $C_2R_2V_1$ circuit, and the slower discharge of C_1 keeps V_1 conductive until C_2 is discharged completely. Because of this arrangement, the voltage pulses across R_2 have the form shown as E_o.

THE BLOCKING OSCILLATOR

In the schematic diagram of the blocking oscillator shown in Figure 7A, transformer primary L_1 is in series with the plate of tube V_1, while capacitor C_1 and resistor R_1 are in series across transformer secondary L_2. One end of R_1 and L_2 and the tube cathode are grounded, while the tube grid connects to point X or junction between C_1 and R_1.

Pulse Production

When the plate voltage supply circuit is closed, an initial surge of tube plate current occurs in transformer primary L_1. Due to their inductive coupling, this surge of primary current induces a voltage in the secondary L_2. Impressed across C_1 and R_1 in series, the secondary voltage charges capacitor C_1 and, due to the resulting displacement current, the voltage drop across R_1 drives the tube grid positive with respect to the cathode.

The positive grid voltage causes a further increase of plate current and the action continues to the point of plate current saturation. Since no further increase of plate current is possible, the induced secondary voltage dies out and capacitor C_1 begins to discharge through R_1 and L_2. At this time, the displacement current is opposite in direction to that during the charging interval, and therefore, the polarity of the voltage drop across R_1 is reversed so that the grid is driven negative.

This grid voltage change reduces the plate current which induces a comparatively high voltage surge in secondary L_2. This voltage polarity is opposite to that induced by an increase of plate current, therefore the resulting current in R_1 produces a voltage drop which drives the grid negative beyond plate current cutoff. With zero plate current, the induced voltage across L_2 dies out, and the capacitor continues to discharge. However, as C_1 discharges, the displacement current decreases gradually, and the negative voltage on the grid is reduced until the tube becomes conductive again, the plate current increases, and the entire cycle repeats.

In Figure 7B, the curve indicates the voltage wave-form at the grid of tube V_1 in Figure 7A, due to the action described. This wave-form is the voltage drop across resistor R_1 produced by alternate charging and discharging of capacitor C_1. Thus, by employing the grid and cathode as output terminals, the blocking oscillator provides the indicated voltage pulse output.

Circuit Action Details

To follow the blocking oscillator action closely, the tube and transformer primary of Figure 7A have been removed to provide the simplified schematic of Figure 8A. When the plate current is increasing, the expanding lines of the magnetic field around the primary induce a voltage in the secondary, and the polarities of the voltage across L_2, C_1, and R_1 are as indicated. At point X, no difference of potential exists between the capacitor and resistor. The plus and minus signs indicate that point X is positive with respect to ground and negative with respect to the positive plate of C_1.

In Figure 7A, the cathode of V_1 is at ground potential, and the grid is connected to point X. Therefore, with the polarities shown in Figure 8A, the grid is positive with respect to the cathode by a voltage E_{R_1}. The positive grid causes a more rapid rise of plate current thereby inducing a greater voltage E_{L_2}, which in turn increases the current in the circuit and produces a still higher grid voltage E_{R_1}. This cumulative feedback action drives the grid of V_1 to a positive potential which causes plate current saturation.

During the period the grid is positive, a cathode to grid electron flow takes place so that capacitor C_1 actually charges through both V_1 and R_1, as shown in Figure 8B. The arrows indicate the direction of electron flow, and the combination of V_1 and R_1 in parallel is in series with C_1. In fact, with the grid positive, the grid-cathode resistance R_{gk} is so low compared to R_1 that practically all of the electron flow is through the tube rather than through R_1, and the charging rate of capacitor C_1 depends mainly on the shorter time constant $R_{gk}C_1$.

To provide a close comparison between grid voltage and plate current, in Figure 9A a slightly modified copy of the curve of Figure 7B is drawn below the $I_b - E_c$ characteristic curve of tube V_1, and various points are numbered in time-sequence for one complete cycle.

As described so far, the positive swing of grid voltage is shown between points 1 and 2 on the E_c curve of Figure 9A. As capacitor C_1 continues to charge, the charging current dies down thereby reducing the voltage drop across R_1 and R_{gk}. Since this drop constitutes the grid voltage for tube V_1, it is shown by the declining curve between points 2 and 3. After the decreasing grid voltage reaches the saturation point "m" on the I_b-E_c curve, a further decrease of E_c results in a decrease of plate current.

This pulse generator provides signals for test purposes. Note that separate controls vary the width and amplitude of the pulses.

Courtesy General Radio Co.

The decreasing plate current causes a collapse of the magnetic field around coil L_1, Figure 7A, so that the lines of force again cut the turns of L_2. Under these conditions a voltage E'_{L2} is induced in L_2, and has the polarity indicated in Figure 9B. Capacitor C_1 has been charged to E_{C1} and thus, for an instant, the circuit contains two sources of emf, E'_{L2} and E_{C1}.

In Figure 9C, this circuit has been rearranged to show more clearly that the two voltages E'_{L2} and E_{C1} are series aiding and applied across R_1. The voltage drop E_{R1} is now equal to E'_{L2} plus E_{C1}. Also, point X is negative with respect to ground, and since the grid voltage is equal to E_{R1}, the grid of the tube instantly becomes highly negative. This polarity reversal of grid voltage is shown between points 3 and 4, Figure 9A.

During this negative swing, as soon as E_c reaches cutoff, the plate current is reduced to zero, thereby causing a rapid collapse of the L_1 magnetic field and a large induced voltage E'_{L2}. This voltage added to E_{C1} results in a momentary overshoot of negative grid voltage, which quickly decreases to the value indicated at point 5. If the transformer Q is too high, some oscillation may occur during the part of the cycle between points 4 and 5.

With the grid of the tube driven negative beyond cutoff, there is no plate current in transformer primary L_1, and no induced voltage in secondary L_2. Under these conditions, with no other source of voltage in the circuit of Figure 9C, capacitor C_1 discharges through resistor R_1 and the d-c resistance of coil L_2 which is shown as R_{L2} in the rearranged circuit of Figure 9D.

During this portion of the cycle, point X is negative with respect to ground, therefore, the grid-cathode resistance of the tube is so high that its shunting effect across R_1 is negligible. Also, the resistance of coil L_2 is low compared to that of R_1 so that the discharge rate depends upon the time constant R_1C_1. Thus, as indicated on the E_C curve of Figure 9A, the discharge rate, shown between points 5 and 6, is of longer duration than the discharge rate shown between points 2 and 3.

Starting at point 5, the drop across resistor R_1 is equal to the capacitor voltage E_{C1}. As the discharge continues, the displacement current becomes smaller and the drop across R_1 reduces until, at point 6, it is equal to the tube cutoff E_{co}. Finally, at the instant E_{R1} becomes less than E_{co}, plate current is re-established and the cycle repeats.

The interval between points 5 and 6 represents the time taken for C_1 to discharge through R_1 sufficiently to allow another cycle to begin, and it depends upon the time constant R_1C_1. Therefore, varying either of these components results in a change of oscillation frequency.

A four electrode inert gas tube that is used in pulse circuit applications.

Courtesy Chatham Electronics Co.

Frequency Control

In a blocking oscillator circuit, the frequency of oscillation depends upon the grid circuit resistor and capacitor, as mentioned, and upon the electric properties of the transformer. In the circuit of Figure 7A for example, either R_1 or C_1 may be made variable to permit manual adjustment of frequency. Also, triggering pulses may be applied to the grid of the blocking oscillator tube to cause the circuit to oscillate in exact synchronism with the incoming pulses. Known also as SYNC pulses, these are applied with positive polarity to initiate conduction of the tube shortly before conduction would start due to the natural or free-running action of the circuit.

To show this triggering action, several cycles of the blocking oscillator grid voltage wave-form are drawn in Figure 10A. Here, the solid-line curve indicates the actual grid voltage variations as controlled by the sync pulses, while the dashed-line curves indicate that each cycle would begin somewhat later if the oscillator were allowed to operate at its free-running frequency. At the natural or free-running frequency, each cycle would occupy a time interval T_N, but at the controlled frequency, each cycle actually occupies a shorter interval T_s as indicated. T_s is the period from the beginning of one sync pulse to the beginning of the next. In this example, the sync pulses have relatively small amplitude, and a shape somewhat like the output E_o in Figure 6.

When positive "sync" pulses are impressed on the grid at an instant when the negative bias is only slightly greater than plate current cutoff, the positive pulse reduces the effective grid bias to less than cutoff, and thus initiates a cycle of oscillation. Referring to Figure 10A, the sync pulses occur just before the grid voltage curve crosses the cutoff (co) axis.

If the free-running frequency of the oscillator is higher than that of the sync pulses, then T_N will be shorter than T_s. The curve of Figure 10B illustrates this condition, and indicates that sync pulse 1 occurs at the proper instant to initiate a cycle as in Figure 10A. Due to the shorter interval T_N, the following free-running cycle will start before the next sync pulse arrives and thus sync pulse 2, Figure 10B, cannot reduce the negative grid bias below cutoff. Due to their lower frequency, the synchronizing pulses occur later and later in the free-running cycles as shown by numbers 3 and 4, but their amplitude is not high enough to initiate a cycle.

Finally, pulse number 5 is able to start a cycle, but time T_1, between it and the start of the preceding cycle, is shorter than the natural period T_N of the unsynchronized oscillations. Again the oscillation runs free for several cycles, and although not shown in the Figure, the oscillator would be tripped by the ninth synchronizing pulse.

Hence, the blocking oscillator must be adjusted to a frequency slightly lower than the desired oscillating frequency in order that the synchronizing pulses will provide the constant control shown in Figure 10A. Also, the polarity of the applied synchronizing pulses must tend to make the grid swing positive so that the negative bias is reduced and plate current is allowed to start. Proper triggering action does not occur if negative pulses are applied to the blocking oscillator grid.

THE MULTIVIBRATOR

The type of relaxation oscillator known as the **multivibrator** does not require inductive or transformer coupling, but instead depends for its operation upon a system of positive feedback obtained by RC circuits. Because of its large number of applications, the multivibrator has many variations, but as the general principles of operation are alike, the following explanations of the action in the basic circuit will aid in the understanding of any particular modification which may be encountered.

This basic circuit is practically the same as that of a resistance coupled amplifier, and the method by which the signal is coupled from one stage to the next comprises one of the main principles of the oscillator operation. For this reason, the coupling action will be reviewed briefly before the explanations of multivibrator actions are given.

In a two stage resistance coupled amplifier with a circuit like that of Figure 11, the input signal voltage E_I appears across resistor R_1 and is applied to control grid G_1 of tube V_1. Amplified by the tube, the signal reappears with greater magnitude across plate load resistor R_{L_1}. Coupled by C_1 and R_2, the amplified signal is impressed on control grid G_2 of tube V_2. Here the signal is amplified by tube V_2 and reappears with still greater magnitude as the output voltage E_o across plate load resistor R_{L2}. Resistors R_{K_1} and R_{K_2} bypassed by capacitors C_{K_1} and C_{K_2} provide the necessary grid bias.

Triodes of the miniature type are used in a blocking oscillator circuits.

Courtesy Sylvania Electric Co.

To follow the action in detail, first consider only the part of the E_I input voltage cycle that swings grid G_1 positive. This positive swing increases the plate current in V_1, and with a constant B+ supply, the resulting added voltage drop across R_{L_1} reduces the positive potential on the plate P_1.

As shown by the partial circuit of Figure 12, in which resistor R_{L_1} is omitted, the V_1 plate voltage E_{P_1} is applied across C_1 and R_2 in series. Thus, with d-c plate voltage but no signal C_1 is charged to the potential of P_1 so that $E_{C_1} = E_{P_1}$. When the signal on the grid of V_1 swings positive, the increase in plate current decreases the plate voltage, and C_1 discharges to a lower voltage.

In order for C_1 to discharge, electrons must leave its lower "−" plate and be added to the upper "+" plate. The path of this electron movement is from the lower plate, down through R_2 to ground and up through R_{K_1} and V_1 to the upper plate. The direction of this electron flow develops a voltage drop across R_2, the polarity of which causes the C_1 end of it to become negative with respect to ground.

Voltage E_{R_2} makes the grid of V_2 more negative since, as shown in Figure 11, G_2 is connected to the C_1 end of R_2. The negative swing of G_2 decreases the plate current of V_2, and thus reduces the voltage across the load resistor R_{L2}. With less voltage across R_{L2}, the V_2 plate voltage rises to cause a positive swing of the output signal E_o. Thus, so far as phase relations are concerned, a positive swing of E_o is caused by a positive swing of the input signal E_I.

Considering now the portion of the E_I input voltage cycle that swings G_1 negative, the V_1 plate current is reduced, the drop across R_{L1} decreases and the plate voltage E_{P_1} rises. Referring to Figure 12, for C_1 to charge up to a higher E_{P_1}, electrons must flow from ground up through R_2 to the bottom plate of C_1. This movement causes the C_1 end of R_2 to be positive with respect to ground, and this positive signal applied to the grid of V_2, Figure 11, increases the V_2 plate current. The increased voltage across R_{L2} makes plate voltage E_{P_2} or E_o less positive, that is it swings in a negative direction.

Thus, the charge and discharge action of the capacitor in the C_1R_2 circuit causes the signal to be coupled from the plate circuit of V_1 to the grid circuit of V_2. Note that the charge on C_1, Figure 12, does not change polarity at any time, but the voltage across it alternately increases and decreases with the charge and discharge.

The second important point is that a positive swing of the grid of either tube results in a negative swing of the plate of the same tube, while a negative grid swing results in a positive plate swing.

The Basic Multivibrator Circuit

Except for some rearrangement of the diagram, the multivibrator circuit of Figure 13 is basically the two stage amplifier of Figure 11. The only changes are the omission of the cathode circuit components and addition of capacitor C_2 to couple the plate of V_2 to the grid of V_1.

Slight variations in the emission properties of the cathodes, the plate resistances of the tubes as well as circuit components cause changes or differences of current and voltage to occur quite readily so that any practical multivibrator begins to oscillate the instant the plate voltage is applied. Therefore, for the following explanations, assume the circuit is in operation and the discharge currents of the coupling capacitor alternately drive the tube grids negative beyond plate current cutoff.

During one part of the oscillatory cycle, tube V_1 is held cutoff while V_2 is conducting. This temporarily stable state exists until the negative bias on the V_1 grid has reduced sufficiently to allow plate current. The V_1 plate cur-

A double pulse generator which supplies either single or paired pulses. The pulses are individually variable in width, amplitude, and spacing.

Courtesy Berkeley Scientific Corp.

rent produces a voltage drop across R_3, thereby reducing the potential at the plate of V_1.

With reduced V_1 plate voltage, capacitor C_1 discharges through resistor R_2 and the resulting voltage drop drives the grid of V_2 negative with respect to its cathode. With a negative grid, the plate current of V_2 is reduced, and the resultant rise of plate voltage causes C_2 to charge through resistor R_1 and impress a positive voltage on the grid of tube V_1. The positive grid greatly increases the plate current of V_1, causing its plate voltage to drop lower, and permit a further discharge of C_1. Carried by resistor R_2, this discharge current causes the grid of V_2 to become sufficiently negative to hold the tube at cutoff for a period of time while C_1 is discharging.

By the time the discharge of C_1 is nearly completed, the voltage drop across R_2 has decreased to slightly less than cutoff and V_2

becomes conductive. The V_2 plate current produces a voltage drop in R_4, thus causing the V_2 plate voltage to decrease. This condition permits C_2 to discharge through R_1, making the grid of V_1 negative with respect to its cathode.

With a negative grid, the V_1 plate current is reduced and the resulting increase of plate voltage causes C_1 to charge through R_2, thereby impressing a positive voltage on the grid of V_2. With a positive grid, the V_2 plate current increases to a comparatively high value, and the corresponding decrease of plate voltage permits sufficient discharge of C_2 through R_1 to bias V_1 to cutoff. This condition continues until C_2 is almost discharged and the drop across R_1 has reduced until slightly less than cutoff to permit V_1 to become conductive and begin the next cycle. Thus, the entire action repeats itself continually, with V_2 conducting when V_1 is cutoff.

The portion of each cycle that V_1 is cutoff depends upon the time constant of R_1C_2, and the cutoff time of V_2 depends upon the time constant of R_2C_1. In the circuit of Figure 13, when $V_1 = V_2$, $C_1 = C_2$, $R_1 = R_2$, and $R_3 = R_4$, the grid voltages have the wave-form shown in Figure 14A, and the plate voltages have the wave-form of Figure 14B. However, the V_1 grid voltage, and the V_1 plate voltage are 180° out of phase with the V_2 grid and plate voltage. Either grid or plate voltage may be taken as the output of the circuit, and Figure 13 indicates the connections. Because of the symmetry of components and connections used, this circuit output has positive and negative pulses of equal duration. Therefore it is called a SYMMETRICAL MULTIVIBRATOR for obtaining rectangular pulses from the plate of V_2. By employing unequal components, narrow or wide output pulses may be produced as desired. In this case the circuit is called an ASYMMETRICAL MULTIVIBRATOR.

The Cathode Coupled Multivibrator

Another form of multivibrator circuit, shown in the diagram of Figure 15, includes a dual triode tube V_1V_2, although separate tubes may be employed. Here, the plate of V_1 is coupled to the grid of V_2 by means of capacitor C_1, and there is no capacitive coupling between the V_2 plate and V_1 grid. The necessary feedback from V_2 to V_1 is obtained by means of the unbypassed, common cathode resistor R_2, which carries both plate currents, any changes of which result in corresponding variations in the bias voltage E_{R_2}.

An important point to observe is that, although E_{R_2} provides the only d-c bias in the grid-cathode circuit of V_1, the grid-cathode circuit of V_2 includes not only R_2, but also variable resistor R_3 which carries the charge and discharge currents of capacitor C_1. Thus, the total bias on the grid of V_2 is equal to the sum of the voltage drops across R_3 and R_2.

The 6SN7 duo-triode is a popular tube for multivibrator circuits.
Courtesy Radio Corporation of America

To understand the oscillator action, assume that after cutoff, tube V_1 starts to conduct. The resulting drop across R_6 decreases the V_1 plate voltage and C_1 discharges through R_3. This electron flow from the negative plate of C_1 to ground, makes the upper end of R_3 sufficiently negative to drive the grid of V_2 to cutoff.

When the discharge of C_1 is nearly complete, the voltage across R_3 is low enough to permit the grid to rise above the cutoff potential and initiate plate current in V_2. The resulting increase of current in R_2 tends to make both grids negative and reduce both plate currents. The decrease in V_1 plate current results in less drop across R_6 and R_2. The plate voltage rises and C_1 now charges through R_3, causing a positive voltage to be impressed on the grid of V_2.

The resulting heavy conduction of V_2 increases the voltage across R_2 sufficiently to cutoff V_1, but cannot cutoff V_2 because the total bias voltage between its grid and cathode is positive. This is due to the fact that R_3 has more resistance than R_2 and thus, the positive voltage across R_3 is greater than the negative bias voltage across R_2 to make the total voltage $E_{R_3} - E_{R_2}$ positive. But, as mentioned earlier, the drop across R_2 is the only bias applied to V_1 and consequently cuts this tube off.

When capacitor C_1 is charged almost to the voltage of the V_1 plate, the charging current is reduced thereby reducing the drop across R_3, and the V_1 positive grid voltage. The V_2 plate current is reduced, resulting in less bias with less positive grid voltage across R_2. Finally, E_{R_2} is too small to maintain cutoff, therefore V_1 conducts to begin a new cycle. The grid and plate voltages of the circuit of Figure 15 have wave-forms like those of Figures 14A and 14B, respectively, and the rectangular pulse output may be taken from the plate of V_1. As with the circuit of Figure 13, various components may be selected to obtain different output wave-forms.

Multivibrator Frequency Control

Multivibrators oscillate at some exact frequency only when a triggering or sync pulses is applied to the grid of either tube. For example, the sync input signal may be applied across grid resistor R_1, as indicated in Figure 15. As with the blocking oscillator, positive sync pulses will control the multivibrator if they are timed to arrive just before the tube (V_1 in this case) begins conduction due to the natural circuit action. However, if they have sufficient amplitude, negative pulses may be employed to drive to cutoff the tube to which they are applied. An advantage in the use of such negative sync pulses is that the circuit cannot be triggered by signals with magnitude less than the sync pulses.

THE ELECTRON COUPLED OSCILLATOR

Circuits other than relaxation oscillators may be employed to generate pulse signals. An example is the electron coupled oscillator shown in Figure 16. Here, transformer T and other circuit components are connected to the cathode, control grid, and screen grid of tube V_1 to form a Hartley oscillator circuit. The screen grid of the tube serves as the anode of the oscillator to which the plate is coupled by means of the varying electron stream.

The lower section of transformer T carries the oscillator anode (screen) current in addition to the plate current. Thus, the complete anode circuit may be traced from the cathode through tube V_1 to the screen grid, through R_3 to B+, through the power supply to ground, and from ground through the lower section of transformer T to the cathode. Resistor R_1 and capacitor C_1 develop grid leak bias for the control grid. With a small t/T ratio C_2R_3 maintains a constant screen voltage, and R_4 serves as the plate load resistor.

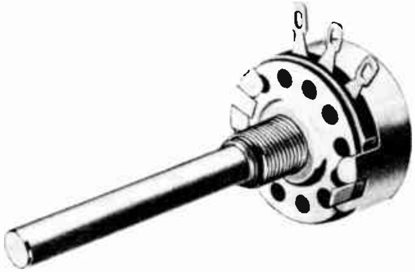

The frequency of the multivibrator may be controlled by placing a variable resistance in the grid circuit.

Courtesy Ohmite Mfg. Co.

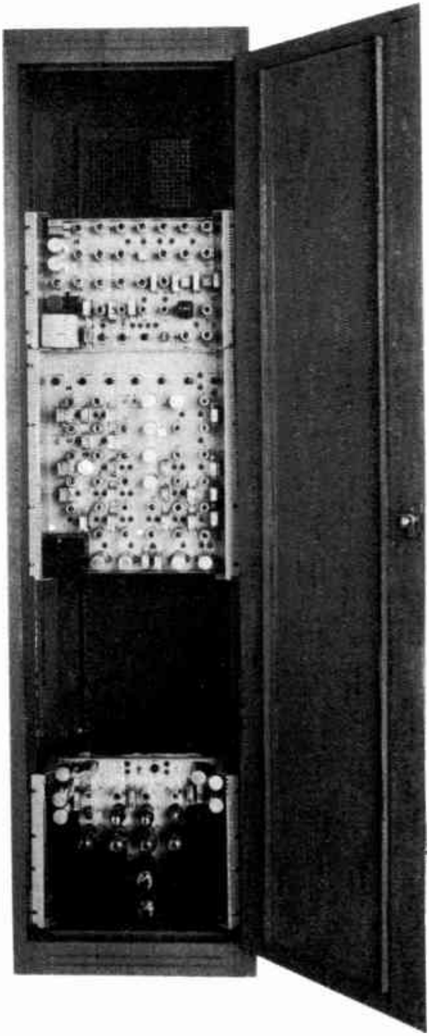

A front view with door open of the transmitter synchronizing signal generator. Contained in this unit are the oscillators which generate the pulses needed for picture transmission.

Courtesy Federal Telecommunication Labs.

Changes in screen (anode) current result in moving flux lines which induce a voltage in the upper part of T. This voltage is coupled by C_1 to the control grid of V_1. Thus, as with the blocking oscillator, when V_1 begins to conduct, the increasing current in T causes a positive voltage to be applied to the grid. The positive grid increases anode current further, and this action continues to plate current saturation.

With no further increase of anode current, the induced grid voltage dies out, and C_1 begins to discharge through R_1, making the grid negative. The negative grid decreases the screen current, and the changing flux lines now induce a negative voltage across the upper part of T. This voltage drives the control grid negative to cutoff. At this point, since there can be no further decrease of screen current, the induced negative voltage dies out, permitting tube V_1 to conduct and start another cycle.

The oscillation frequency is determined primarily by the inductance and distributed capacitance of transformer T. In contrast to the blocking oscillator, the grid circuit RC time constant is not sufficient to cause the oscillator to block. Therefore, the positive and negative alternations of grid voltage are of about equal duration.

When the circuit of Figure 16 is operating normally, the control grid voltage variations are sufficient to drive the tube between saturation and cutoff, as explained. Carried by R_4, the tube plate current follows these control grid variations to produce a voltage drop across R_4 which has the waveform shown in Figure 17A at point (1) in Figure 16. When applied to the short time-constant high pass circuit C_3R_5, an output at point (2) consists of narrowed pulses as shown in Figure 17B.

IMPORTANT DEFINITIONS

IONIZATION—[igh uh ni ZAY sh'n]—Production of ions due to the loss of shell electrons from the atoms or molecules of a gas.

MULTIVIBRATOR—A two tube, resistance coupled amplifier with the output voltage fed back into the input to produce oscillations.

PULSE GENERATORS—Electronic circuit element employed to generate discontinuous or pulse type signals.

RELAXATION OSCILLATOR—An oscillator the frequency of which is controlled by the time required for a capacitor to charge or discharge through a resistor. In some cases, the frequency may depend upon more than one RC circuit.

THYRATRON—[THIGH ruh trahn]—A grid-controlled, hot-cathode, arc discharge tube.

STUDENT NOTES

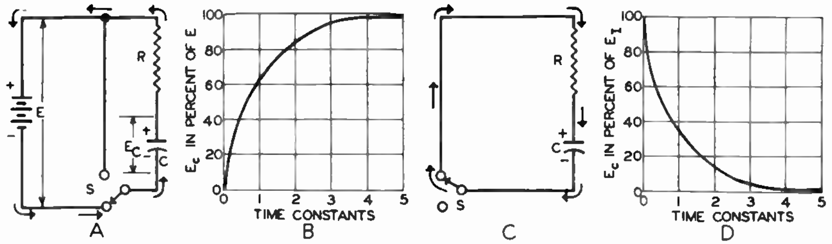

FIGURE 1

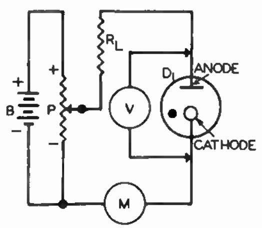

FIGURE 2

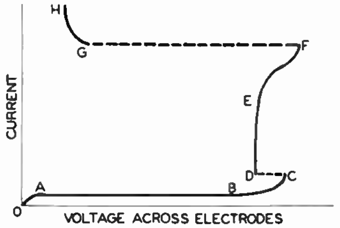

FIGURE 3

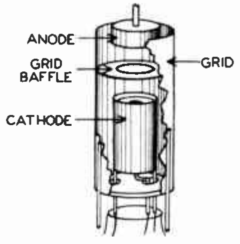

FIGURE 4

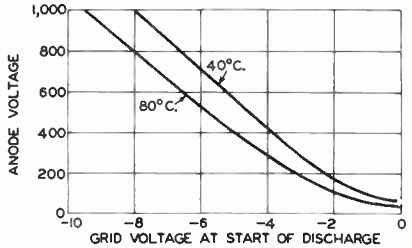

FIGURE 5

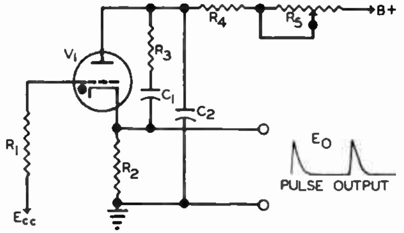

FIGURE 6

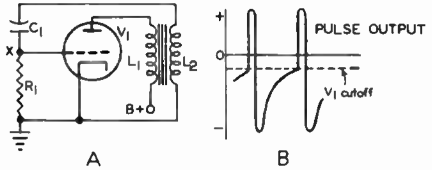

FIGURE 7

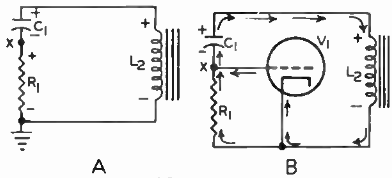

FIGURE 8

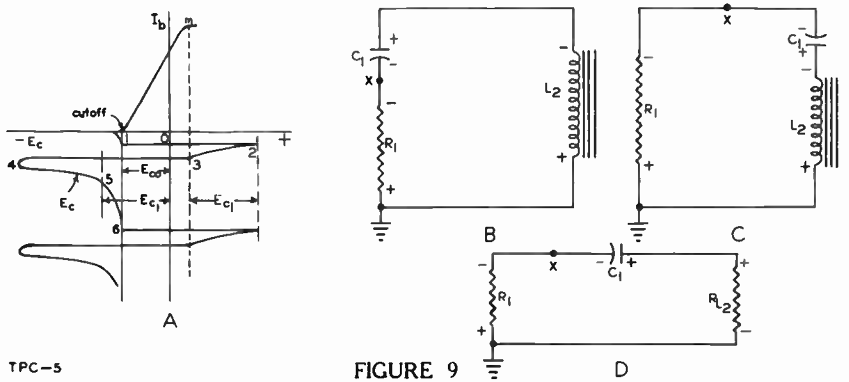

FIGURE 9

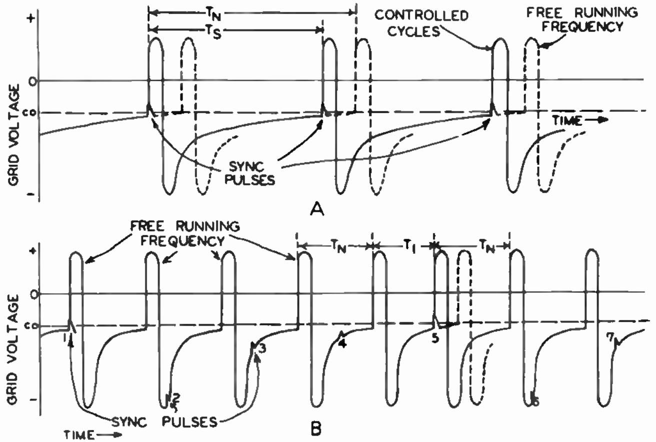

FIGURE 10

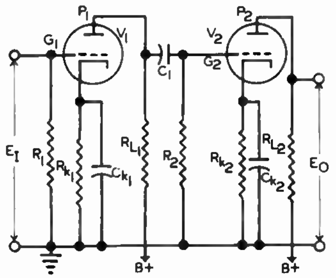

FIGURE 11

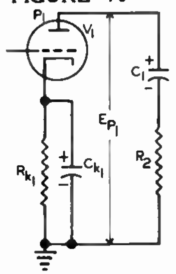

FIGURE 12

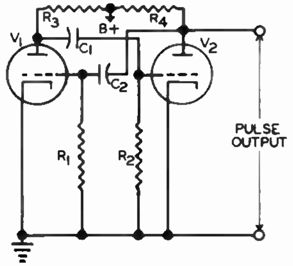

FIGURE 13

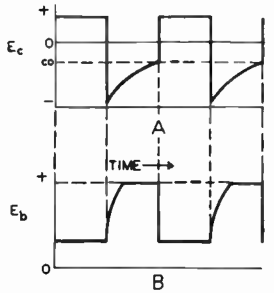

FIGURE 14

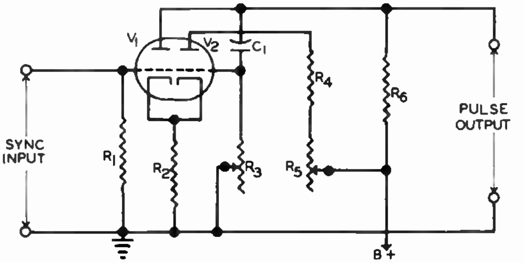

FIGURE 15

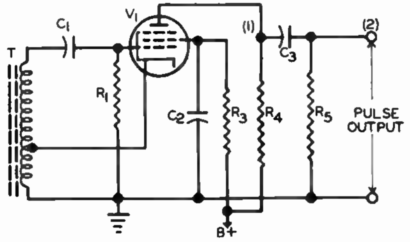

FIGURE 16

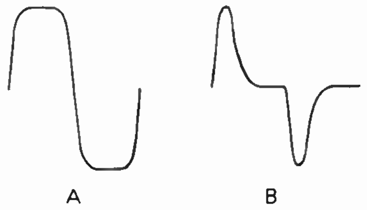

FIGURE 17

Cut along this line and send in for grading

DE FOREST'S TRAINING, INC.

SPECIALIZED SCIENTIFIC AND PRACTICAL INSTRUCTION

2533 NORTH ASHLAND AVENUE CHICAGO 14, ILLINOIS

QUESTIONS

Pulse Generators—Lesson TPC-5

11

How many advance Lessons have you now on hand? ....

Print or use Rubber Stamp.

Name .... Student No. ....

Street ....Zone...................... Grade ....

City ....State .... Instructor ....

Write your answers on the "Ans." line below each question. If more space is needed use reverse side of this page.

1. How are gas filled tubes classed?

Ans...

2. In a gas filled type tube, what is meant by the "dark current"?

Ans...

3. In the partial circuit of Figure 2, what is the purpose of resistor R_L?

Ans...

4. What is meant when a gas filled tube "fires"?

Ans...

5. In the partial circuit of Figure 7A, what component develops the voltage pulse indicated in Figure 7B?

Ans...

6. In the partial arrangement of Figure 7A what circuit components effectively determine the time constant of (a) the charging circuit, (b) the discharging circuit?

Ans...

7. Is the oscillator circuit of Figure 7A adjusted to a free running frequency above or below the desired oscillating frequency? Why?

Ans...

8. Does the charge on capacitor C_1 of Figure 11 change polarity with change of signal?

Ans...

9. In the circuit of Figure 15, what determines the total bias on the grid of tube V_2?

Ans...

10. What names are given to the oscillator arrangements of (1) Figure 7A, (2) Figure 15, and (3) Figure 16?

Ans...

FROM OUR *President's* NOTEBOOK

GOSSIP

The worst gossips in the world are—People.

Neither sex can be charged with more than an equal responsibility for an evil that has wrecked countless lives, families, businesses—even Nations.

Idle folks have the most time that may be devoted to leaning over back fences indulging in Idle Gossip.

This, then, is not so much an essay upon the subject of Gossip and it's resultant evils as it is a brief sermon upon the desirability of Keeping Busy.

If our minds are kept busy with matters pertaining to our work and our responsibilities—

If we devote our "discussion periods" to talking about Constructive things—we will seldom find time to indulge in Destructive conversation. We're going to Keep Busy—too busy to tear down with Idle Gossip the reputation of individuals or institutions that for one reason or another have not gained our full approval.

Let's Keep Busy.

Yours for success,

E.B. DeVry

PRESIDENT

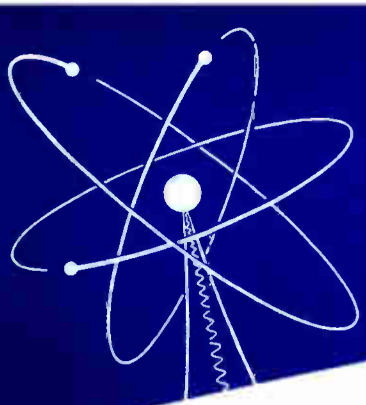

WAVE SHAPING

Lesson TPC-6A

DeVRY Technical Institute

4141 W. Belmont Ave., Chicago 41, Illinois
Affiliated with DeFOREST'S TRAINING, INC.

TPC-6A

WAVE SHAPING

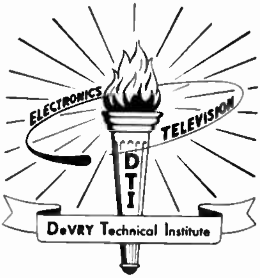

4141 Belmont Ave.
Chicago 41, Illinois

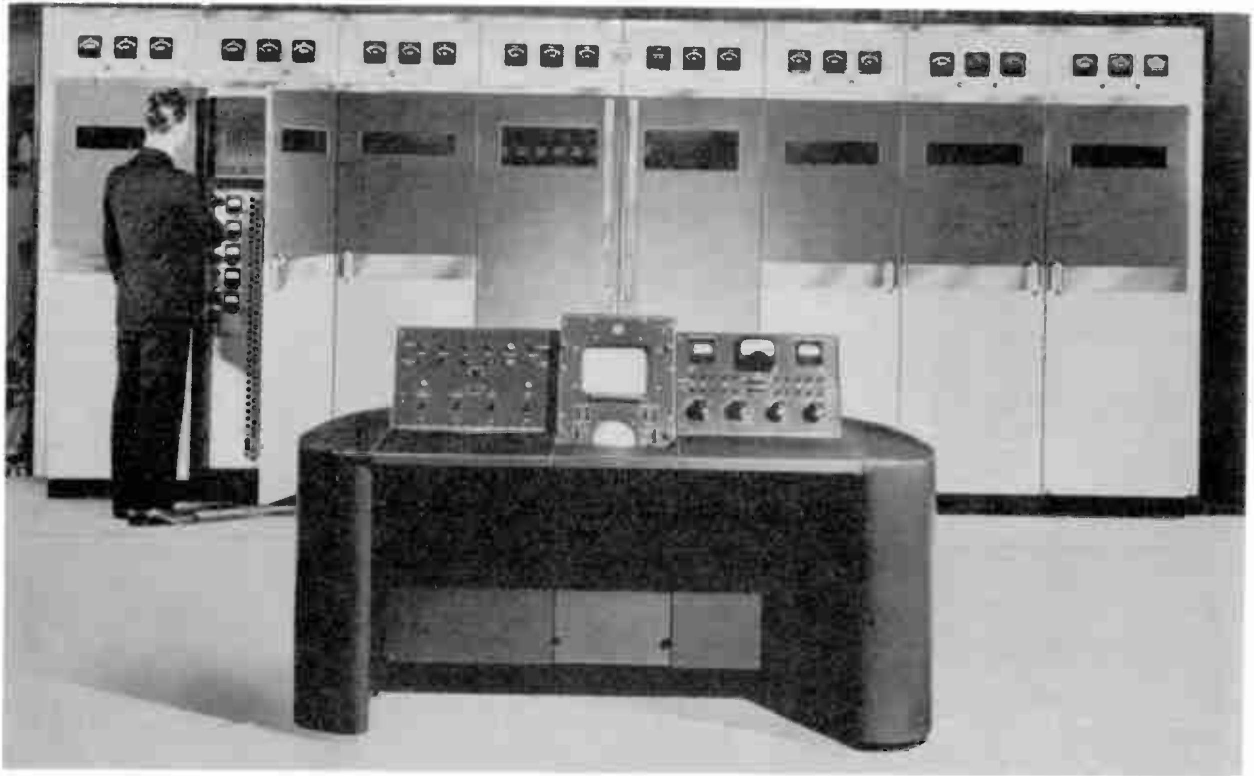

A television transmitter and control console. The monitor mounted on the control console contains wave shaping and amplifier circuits similar to the home television receiver.

Courtesy Radio Corporation of America

Pulse Circuits

WAVE SHAPING

Contents

A hard fall should mean a high bounce if one is made of the right material.

—The Youngstown Bulletin

WAVE SHAPING

For simplicity, many explanations of electron equipment are given in terms of the circuit action or response with voltages or currents having a sine wave-form. However, such explanations are not always applicable. In many units, the input signal consists of many sine wave voltages; which may have the same or different amplitude, frequency, or phase; combined in some definite wave-form other than a sine wave. A common example is the rectangular pulse type of voltage described in an earlier lesson.

The usual graphical representation of the sine wave voltage is shown in Figure 1A. Here, the length of the horizontal base line is made proportional to some given interval of time, and the distance above and below this line represents positive and negative voltage magnitude. That is, although cross-sectional lines are not drawn in this graph, the curve represents the instantaneous amplitude and polarity of the voltage for each and every instant of time during a period of two complete cycles.

Rather than seconds or microseconds, often it is convenient to consider time in periods of one cycle as indicated by arrow "t." Then, any desired point in the curve can be designated by stating the elapsed time in terms of periods or portions of periods.

The same type of voltage-time graph may be employed to illustrate the **rectangular wave** shown in Figure 1B. Here, the theoretically perfect rectangular voltage rises to its positive peak instantly and remains at this value for one-half cycle. Then, the voltage switches instantly from the positive to the negative peak where it stays for the remainder of the period, after which it snaps back to the positive peak again to begin the next cycle.

TYPES OF WAVE-FORMS

For many applications, explanations of circuit action are simplified by assuming the wave-form of Figure 1B. However, in practical circuits, rectangular or pulse type voltages do not rise to maximum and fall to zero instantaneously. Often, the term "square wave" is employed to designate these voltage wave-forms, but it does not mean that when applied to an oscilloscope, the voltage will produce a traced curve with equal vertical and horizontal dimensions. Actually, these dimensions cannot be compared, because the vertical dimension represents voltage magnitude while the horizontal dimension represents elapsed time.

In Figure 1B, the curve indicates a voltage wave in which the positive and negative alternations have equal duration, or width. However, some signals require either positive or negative alternations of considerably less duration or width.

In this case, the term positive or negative pulse is employed to designate the narrower alternation. When pulses are spaced equally in time, they have a constant REPETITION FREQUENCY. In other conditions, the repetition frequency varies in some definite manner or else the pulse recurrence is RANDOM in nature.

Illustrated in Figure 1C, the **sawtooth wave** changes voltage at a constant rate from its peak of one polarity to its opposite peak, and then snaps back to the first polarity peak again to complete the cycle. The gradual change may occur in the direction from negative to positive, or from positive to negative.

In Figure 1C, the first cycle begins at zero, increases rapidly to the negative peak from which the voltage decreases at a steady rate with time until it returns to zero, continues at the same rate to its positive peak, and then rapidly changes to zero again.

As with rectangular waves, no practical sawtooth voltage can change in zero time, and therefore, the rapid change at the end of each cycle occupies a short but definite period. Thus, this portion of the curve must be drawn with a slight slant. Generally, it is desirable that this voltage change occurs in as short a time as possible and therefore, the theoretically ideal sawtooth voltage has an absolutely constant rate of change over the cycle until the last instant when it snaps back to the beginning value again.

A fourth signal employed in electron equipment is the TRIANGULAR WAVE of Figure 1D. To emphasize the wave-form the curve indicates a negative peak at the beginning of the first cycle. The voltage decreases at a steady rate to zero, and then increases at the same rate to its positive peak. Still at the same rate, the voltage decreases to zero and increases to the negative peak for a complete cycle.

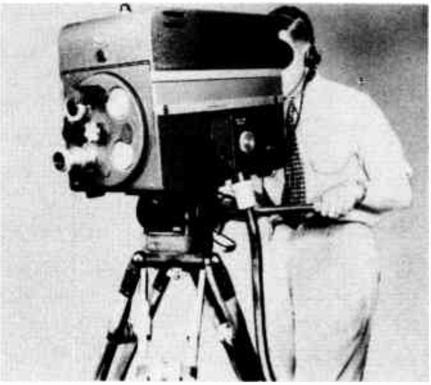

Pulse shaping networks are required in the sync. generator to supply a television camera with the proper wave forms.

Courtesy Allen B. DuMont Labs., Inc.

If the change from positive to negative is reduced in duration, so as to take less time than negative to positive change, the wave-form of Figure 1D becomes the practical sawtooth voltage described for Figure 1C. In fact, the perfect triangular voltage itself may be considered a special form of the sawtooth wave in which the two changes occupy equal time intervals. Although signal voltages may have an infinite number of different wave-forms, most shapes can be classed as one, or a combination, of those shown in Figure 1.

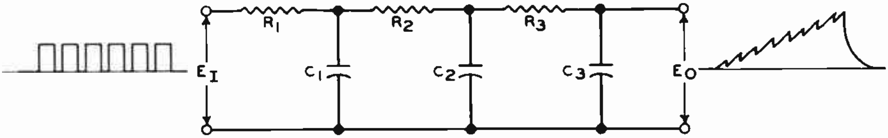

The type of integrator network used in television receivers to shape the vertical synchronizing pulse for proper control of the vertical oscillator.

WAVE SHAPING BY DIFFERENTIATION

For various circuit applications, sometimes it is desirable to modify a given input voltage wave-form in some specified manner, or to effect a complete change such that an entirely different output waveform results. When employed for this purpose, a high pass filter, explained in a previous lesson, is called a **differentiating network.** As illustrated in Figure 2, circuit A is an RC and circuit B an RL form of differentiating network.

In both cases the input voltage E_I is applied to the input terminals, and produces a current in the two components in series. For the RC circuit of Figure 2A, the instantaneous voltage drop across resistor R forms the output wave E_o, while in the case of the RL circuit of Figure 2B, the output E_o is developed across coil L.

Briefly reviewing the action of the RC differentiating circuit, the applied voltage causes the capacitor to charge and discharge alternately through the resistor, and a voltage E_o is produced across the resistor by these charge and discharge currents. Except when the input is a pure sine wave, some change of wave-form is produced, depending upon the t/T ratio of the network. Reviewing briefly, for this ratio, t is the period of the input voltage, in seconds and $T = RC$. When T is the time in seconds, R is the resistance in ohms, and C is the capacitance in farads.

When the input voltage is applied to the RL differentiating circuit, the resulting current in the coil develops a back emf which affects the instantaneous current amplitude and results in a waveform change. Again this change depends upon the t/T ratio, where t is the period of the input wave, and the time constant is $T = L/R$ seconds, when L is the inductance in henrys and R is the resistance in ohms.

For different t/T ratios, Figure 3 shows the wave-form changes which occur when the input voltage E_I for Figure 2 is a rectangular wave. To evaluate the changes of amplitude the curves are started in the negative alternation of the cycle. In each case, Figures 3A, 3B, and 3C, the input wave is indicated by the dashed line curve E_I, and the solid line curve E_o shows the output wave-form appearing across R in Figure 2A or L in Figure 2B.

For Figure 3A, the t/T ratio is 0.1, and as shown, E_o is changed only slightly from the original rectangular wave-form of E_I. When $t = T$, that is $t/T = 1$, the output has the form shown by curve E_o in Figure 3B. Finally, when t is ten times T, such that $t/T = 10$, an extreme change is produced as shown in Figure 3C. Here, E_o has the form of sharp peaks which rise to approximately twice the height of E_I, and then rapidly drop to zero within the time of a single alternation of E_I.

When a sawtooth input voltage E_I is applied to a differentiating circuit the wave-form changes which occur for different t/T ratios are shown in Figure 4. As before, the input E_I is indicated by the dashed line curves, and the solid line curves indicate the output voltage E_o for Figures 2A or 2B.

For Figure 4A, $t/T = 0.1$ and E_o follows the input wave so closely that the two curves cannot be separated. When $t/T = 1$, there is some curvature produced in the sloping portion of the E_o output wave of Figure 4B. For Figure 4C, $t/T = 10$, and a considerable curvature is produced in E_o. The negative portion has a shape similar to the sharp peaks of Figure 3C, and the positive portions rise to only about 40% of E_I peak.

When the input voltage E_I has a triangular wave-form, the results of differentiation are shown in Figure 5. Again, the dashed line curves represent E_I and the solid line curves show the wave-form of E_o. When $t/T = 0.1$, the wave shape change cannot be discerned, and E_o has the same form as E_I in Figure 5A. However, some curvature and reduction in amplitude result when $t/T = 1$, as in Figure 5B. Finally, in Figure 5C, when $t/T = 10$ the wave-form is changed considerably, and the amplitude is reduced by more than 50%.

Summarizing the action for the three input wave types shown in Figures 3, 4, and 5: *minimum change occurs in differentiating networks when the t/T ratio is relatively small, while a large t/T ratio results in considerable difference between the wave-forms of E_I and E_o.* When it is necessary to transmit a signal voltage with minimum distortion or attenuation through a differentiating network, circuit components must be chosen to provide a small t/T ratio. On the other hand, a large t/T ratio is used when a change of wave-form is desirable.

For example, this arrangement permits the production of alternate positive and negative pulses, Figure 3C, when the input is a rectangular wave. The same circuit arrangement produces a series of negative pulses, Figure 4C, when E_I is a positive-going sawtooth wave, as in Figure 4A. A negative-going sawtooth input may be used if positive output pulses are desired. Finally, a triangular wave input results in an output having a modified rectangular wave-form as shown in Figure 5C.

When larger t/T ratios than shown in the above examples are used, still narrower and higher pulses are formed from the rectangular and sawtooth input waves, while the triangular wave is converted into a more exact rectangular form, but with lower amplitude than shown in Figure 5C.

WAVE SHAPING BY INTEGRATION

Another device which can be employed to change the wave-forms of signal voltages is the low pass filter, two basic forms of which are the RC circuit of Figure 6A, and the RL circuit of Figure 6B. When used for this purpose, the filter is known as an **integrating network.** In Figure 6A the input voltage E_I is applied to resistor R and capacitor C in series, and the resulting alternating current causes C to charge and discharge alternately through R. Thus, a continually varying difference of potential which is developed across the plates of C is used for the output voltage E_o.

For the circuit of Figure 6B, the applied input voltage produces a current in L and R which are connected in series so far as E_I is concerned. Produced by this current, the voltage variation across R is the output E_o. Like the differentiating circuits, both integrating circuits of Figure 6 produce changes in wave-form except when the input voltage E_I is a pure sine wave.

Figure 7 shows the changes produced by integrating circuits for various t/T ratios when E_I has a rectangular wave-form. When t/T = 10, either circuit of Figure 6 provides an output wave with the form indicated by curve E_o, Figure 7A. As shown, the voltage is changed considerably from its original wave-form, but rises to approximately the E_I peak for each alternation.

Figure 7B shows the changed shape and considerably reduced amplitude of E_o which results when the t/T ratio equals 1. Here, the amplitude is reduced more than 50%, and the wave-form of E_o more closely resembles a triangle than the original rectangular wave E_I. When $t/T = 0.1$, E_o has the very definite triangular wave-form of Figure 7C, but the output is reduced to a very low amplitude; about 1% of E_I.

For the same set of t/T ratios, the changes which occur when a sawtooth wave is applied to the input terminals of an integrating network are shown in Figure 8. With $t/T = 10$, Figure 8A shows the positive portions of E_o to follow the variations of E_I fairly closely, but the negative portions have a rounded shape and very low amplitude. Figure 8B shows the results of the integrating action when $t/T = 1$, where E_o resembles a series of curves called a "parabola." Finally, when $t/T = 0.1$ as indicated in Figure 8C, E_o has a definite "parabolic" wave-form, but the output amplitude is less than 1% of E_I.

When the input signal has triangular wave-form, the transmitted voltage is a curved wave with symmetrical alternations as shown, Figure 9. As before, t/T ratios of 10, 1, and 0.1 give the results shown in Figure 9A, 9B, and 9C, respectively. Thus, as the t/T ratio is reduced, E_o decreases in amplitude and more closely approaches a series of alternate positive and negative parabolic half-cycles.

Unlike the differentiating circuits, *the integrating circuits change the wave-form most when the t/T ratio is relatively small.* Thus, to transmit a signal voltage with minimum change through a network equivalent to either circuit of Figure 6, the selected components must provide a large t/T ratio. Conversely, for a small t/T ratio the integrating circuit causes large changes of wave-form.

The television receiver contains circuits which shape the synchronizing pulses to assure proper operation.
Courtesy Motorola, Inc.

RECTANGULAR WAVE GENERATION

The production of rectangular waves may be accomplished in various ways, one of which uses a multivibrator type relaxation oscillator as described in the lesson on pulse generators. Another common method employs an electron tube circuit known as a **clipper** such as shown in the schematic diagram of Figure 10. In general, a clipper stage passes some desired portion of the signal voltage applied to its input, while the remainder, such as the positive or negative peak, is removed or CLIPPED by the circuit action.

In Figure 10, the clipper circuit is essentially that of a triode resistance coupled amplifier. A differentiating network composed of capacitor C_1 and resistor R_1 serves as the usual input coupling capacitor and grid resistor. The cathode resistor R_3 and capacitor C_3 form an integrating network, R_4 is the plate load resistor, and the alternating component of the plate voltage is coupled by capacitor C_2 to the output terminals. An additional resistor R_2, connected between capacitor C_1 and the grid of tube V_1 forms the main difference between this clipper circuit and the ordinary resistance-coupled amplifier. However, a sine wave voltage applied to the input terminals must have sufficient amplitude to drive the tube grid beyond cutoff in the negative direction, and positive with respect to the cathode during the positive alternations.

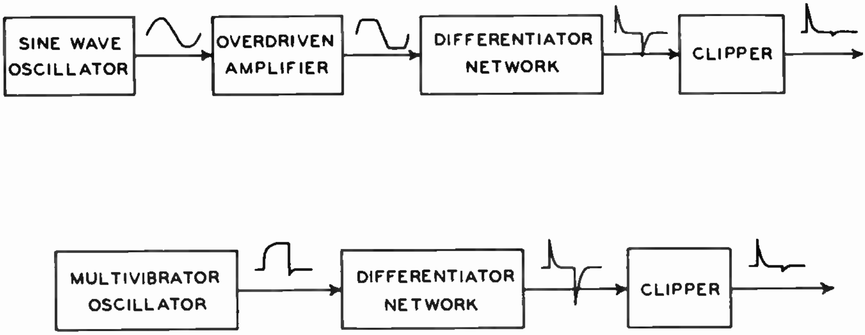

The block diagrams of two types of timing circuits used in radar. Note the output pulse is similar in each system.

In operation, the high amplitude input sine wave is applied as indicated in Figure 10, and coupled through C_1 appears across R_1 in parallel with the series circuit composed of R_2, the grid-cathode circuit of the tube and the R_3C_3 network. Usually, R_2 has a resistance of one or two megohms which is small compared to the input impedance of tube V_1 when the grid is negative with respect to the cathode. Therefore, when the grid is negative, almost all of the signal voltage E_g appears between the grid and cathode of tube V_1, and very little across R_2. When the applied signal voltage increases from zero during the first part of the positive alternation, it reduces the net grid voltage E_c, and plate current increases proportionally.

However, as soon as the positive swing of the input signal exceeds the negative d-c grid bias, the net voltage E_c becomes positive, and electrons are attracted from the cathode to the positive grid. The complete path of these grid circuit electrons is from the cathode of the tube to the grid, through R_2 to the right hand plate of C_1, from the left hand plate through the sine wave source to ground, and from ground through R_3 to the cathode of V_1.

This current produces a voltage drop across R_2 such that its grid end is negative as indicated. Due to this polarity, E_{R_2} opposes the applied voltage E_g, and increases with the grid current as E_g rises. Thus, a varying d-c voltage E_{R_2}, added to the grid circuit during the highly positive portion of the input cycle, prevents the grid of the tube from being driven positive by an excessive amount.

During the positive alternations of the signal voltage E_g, this action causes the net grid voltage E_c to remain practically constant at a low positive value as indicated by curve (1) in Figure 11. Here, the E_c-I_b characteristic of tube V_1 is shown, with the operating point located about midway on the straight portion of the curve. Drawn to illustrate the variations of E_c, curve (1) indicates this voltage to swing in a positive direction until it reaches a point slightly to the right of zero. Continuing to the right, the dashed-line curve indicates the positive swing of E_g. However, due to the bias produced by the grid current in R_2, E_c remains at the low positive value during most of the positive alternation of E_g. Finally E_g and E_c swing negative with respect to zero, and the grid current no longer exists.

During the negative alternation of the input wave, there is no electron flow in R_2 to produce an opposing bias, and E_c swings below cutoff as shown. To provide the desired operating point for the grid of tube V_1, Figure 10, plate current develops a voltage across R_3 and C_3 making the cathode positive with respect to ground, and grid-leak bias is developed across R_1 due to the discharge current of C_1 during the negative alternations of the input wave.

Controlled by the variations of E_g, whenever E_c is above cutoff, the plate current of V_1 has the waveform indicated by curve (2), Figure 11. From the grid operating point, I_b increases rapidly to its maximum determined by the low positive E_c, which is maintained during most of the positive alternation. When E_g swings negative, E_c goes to cutoff and I_b falls to zero where it remains during the entire time that E_c is below cutoff. Finally for the last portion of the cycle, E_c rises above cutoff and I_b rises from zero. Carried by load resistor R_4, this varying plate current produces a voltage drop with a rectangular wave-form as indicated at the output terminals in Figure 10.

SAWTOOTH WAVE GENERATION

A common method for generating sawtooth waves is to alternately charge and discharge a capacitor in such a way that equal changes of voltage across it are produced during unequal time intervals. Thus, if a longer time is taken to charge the capacitor than the relatively short time required to discharge it, the voltage across it will increase slowly with time and then quickly return to its original value, for each sawtooth cycle.

Since the time required to charge or discharge a capacitor depends upon the series resistance which carries the displacement current, the sawtooth generating circuit must contain various resistive elements connected so as to provide the desired control of the charge and discharge rates. That is, the "sawtooth forming capacitor" must be connected in such a way that one RC circuit is used during the charging interval and another while discharging. Also, an external d-c voltage must be connected to supply the charging current, but this voltage should not be directly in series with the capacitor discharge circuit.

To provide for the various periodic changes, some means is required to switch the capacitor from one circuit to the other. At relatively low frequencies, a type of mechanical switch may be satisfactory for this purpose but such an arrangement is not practical for production of the higher frequency sawtooth voltages required in many applications. Therefore, it is common practice to employ an electron tube to perform the desired switching.

In the sawtooth voltage generator circuit shown in Figure 12, the plate circuit of a high-vacuum type triode V_1 is connected across capacitor C, and from B+, a voltage is applied through resistor R to the plate of V_1 and to the upper plate of C. Impressed across the grid circuit of V_1, the rectangular voltage E_I has positive alternations of very short duration as compared to negative alternations. Also, the magnitude of E_I is high enough to hold the grid at plate current cutoff during the longer negative alternations and thus the plate circuit of V_1 is conductive only during the short positive alternations or pulses. By this action, the plate circuit of tube V_1 operates as a switch controlled by the input voltage E_I.

Still returning to the circuit of Figure 12, during the negative alternators of E_I, the plate circuit of tube V_1 is nonconductive and the B or plate supply charges capacitor C in series with resistor R. During this interval, electrons flow from the grounded (B−) to the lower plate of C and from its upper plate through R to (B+). The path is completed externally through the B supply from positive to negative. The rate at which C charges is determined by the time constant RC, and the rise of voltage across the plates of C is indicated by the sloping portions of the output curve E_o.

When a positive alternation or pulse of the control voltage E_I arrives at the grid of V_1, the tube conducts momentarily, and electrons flow from ground, through V_1 from cathode to plate and R to B+ in the usual manner; this current increases the voltage drop across R and thus tends to decrease the voltage on the plate of V_1 to a value lower than that on the upper plate of C.

However, since the capacitor terminals are connected to the cathode and plate of V_1, respectively, any change in the tube plate voltage is accompanied by a like change in the voltage across C. With V_1 conducting, the tube serves as a low-resistance discharge path for C. Therefore, a heavy current from the negative plate of C to the cathode of V_1, and through the tube to the positive plate of C quickly discharges the capacitor as indicated by the nearly vertical portions of the E_o curve.

At the end of the E_I positive pulse, the grid of V_1 is driven negative beyond cutoff, the tube ceases to conduct, and C again charges through R to start the next sawtooth cycle. Thus, the capacitor C charges slowly through the high resistance of R and discharges quickly through the comparatively low resistance of tube V_1. Due to this action the voltage across the plates of C rises slowly and falls rapidly to provide the sawtooth wave-form E_o at the output terminals.

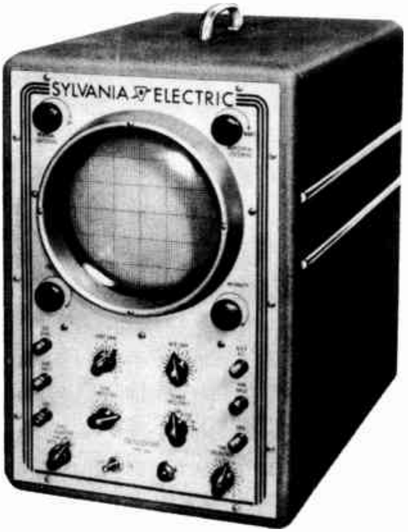

In an oscilloscope the switch labeled "course frequency" selects the RC combination which determines the frequency and wave shape of the saw tooth sweep voltages.

Courtesy Sylvania Electric Co.

When a capacitor charges or discharges through series resistance, the rate varies in an exponential manner, and therefore, the complete charge or discharge curve is not a straight line. However, the curve is very linear near the beginning of the charge or discharge action. Hence, to obtain a sawtooth voltage wave with minimum curvature, a circuit like that of Figure 12 must be operated so that the sawtooth forming capacitor charges to only a small part of the applied B+ voltage, and then discharges an equally small amount.

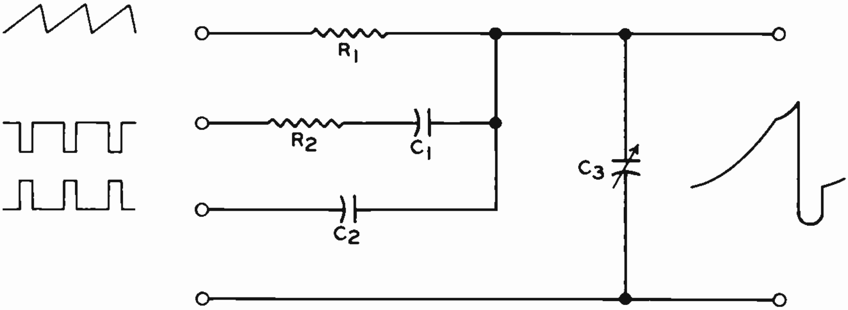

A special type pulse shaping network used in some television receivers. Capacitor C3 is made variable to control the output pulse-amplitude.

Due to this manner of operation, the capacitor never becomes either fully charged or completely discharged, it always retains some voltage such that its plates have the indicated polarities. Thus, in the above explanation of Figure 12, the terms "charge" and "discharge" do not refer to the complete charging and discharging of the capacitor, but designate the partial charge and discharge actions necessary for the desired linear sawtooth voltage wave-form.

Since one cycle of sawtooth output is produced by each cycle of E_I, the control voltage applied to the grid of V_1 determines the frequency of the sawtooth waves produced by the circuit of Figure 12. The amplitude of E_o depends upon the applied B+ voltage, the frequency and wave-form of E_I, the values of R and C, and the resistance r_p of tube V_1 when it is conductive.

With a given E_I and time constant RC, the capacitor charges to a fixed percentage of the B+ voltage. Therefore, an increase in B+ will increase the voltage to which C charges during each cycle. With a given B+ and RC time constant, C charges higher during each cycle when the frequency of E_I is low, since then there is more time between the positive pulses of E_I. Also, the same conditions exist when these pulses are very narrow compared to the negative alternations of E_I. For specific B+ and E_I, the time constant RC determines how quickly, and therefore how much, the capacitor can charge while the tube is cutoff, and the time constant r_pC determines how much C can discharge when V_1 is conductive.

Hence the wave-form of E_o depends upon the relationship between E_I and the time constants RC and r_pC. To provide a sawtooth wave with minimum curvature, the E_I wave-form and the circuit time constants must be such that the negative alternations of the control voltage are short compared to RC, and the positive pulses are short compared to r_pC. Also, the narrower the positive pulses, the steeper the "vertical" portions of the sawtooth wave, since a smaller portion of the discharge curve is employed.

TRIANGULAR WAVE GENERATION

As explained for Figure 7C, a voltage with triangular wave-form may be produced by applying a rectangular wave to an integrating circuit, if the time constant T of the integrating circuit is large compared to the period t of the applied wave. That is, to obtain a linear wave, the t/T ratio must be on the order of 0.2 or less.

Using an RC integrating circuit, the triangular wave forming action is illustrated in Figure 13. Here, the rectangular wave E_I is applied to the input terminals of the circuit, and thus produces an alternating current which causes the capacitor C to charge and discharge through the resistor R. Indicated along curve E_o, points (1), (2), and (3) correspond to the same instants of time as the points (1), (2), and (3) along curve E_I.

At point (1), voltage E_I changes suddenly from its negative to its positive peak. At the same instant, having been charged previously with its upper plate negative with respect to ground, capacitor C begins to discharge. E_I remains at its positive value during the time interval between points (1) and (2), and during this period, C discharges to zero and then charges positive as indicated at point (2) of curve E_o.

At point (2), E_I returns suddenly to its negative peak where it remains until point (3). During the interval between points (2) and (3), the capacitor discharges to zero and then charges to the negative voltage indicated at point (3) of curve E_o to complete the cycle. Since the time constant, RC, is long compared to the total period occupied by one cycle of E_I, the capacitor is permitted to charge and discharge only a small amount during successive alternations of E_I. Thus, only small parts of the charge and discharge curves are employed, resulting in the linear triangular waves shown.

Unlike a sawtooth forming capacitor, in Figure 13 capacitor C charges and discharges through the same series resistance provided by R. In fact, to form each complete sloping portion of the triangular voltage wave, C discharges through R and then charges through R, as explained above. Since, the same time constant is used for both the charge and discharge actions in this circuit, the wave slopes remain constant throughout their lengths.

Thus, it is unnecessary to change the series resistance from one value to another, for the single RC circuit of Figure 13 produces the desired triangular wave. To obtain good linearity, the required t/T ratio makes E_0 very small in amplitude as compared with E_I; therefore, the applied rectangular wave must have large amplitude to produce a usable E_o.

WAVE SHAPING BY ADDITION

For some applications, it is necessary to add two or more different signals to obtain the desired form. The required complex wave-forms often can be obtained by the proper combination of the basic wave shapes described above.

The simple resistance circuit of Figure 14 provides one means of adding two voltages, E_1 and E_2, to form a resultant output, E_o. Here, resistors R_1 and R_2 in series form the load for the source of voltage E_1, and R_2 alone serves as the load for the E_2 voltage source. Thus, resistor R_1 isolates the two sources so that they do not load each other and produce distortion.

To synchronize the transmission and reception of television images it is customary to combine two voltages to obtain an output voltage of some desired wave-form. Without describing the details of their application, the following explanation illustrates three common

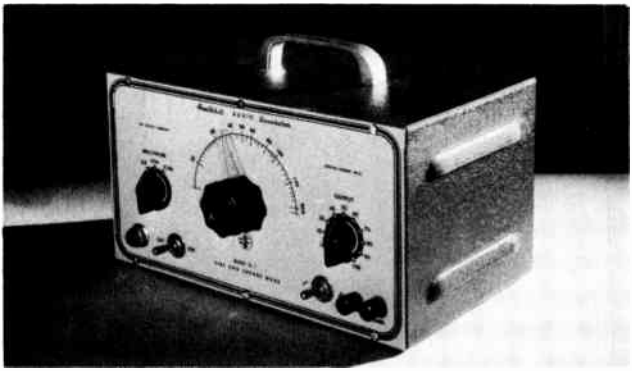

A combination sine and square wave generator. Controlled by a switch, a wave shaping circuit is inserted in the signal circuit to produce square waves.

Courtesy The Heath Company

forms of special control voltage wave-forms.

When the rectangular voltages or pulses E_1 and E_2 of Figure 15 are impressed across the terminals indicated in Figure 14, the output voltage E_o has the wave-form of the lower curve in Figure 15. Here the voltage consists of a series of broad pulses on top of each of which a narrow pulse is superimposed.

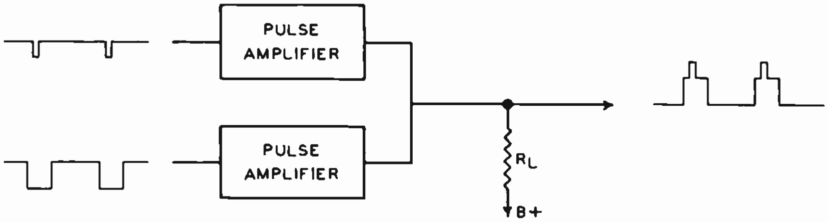

A method of pulse shaping used in television synchronizing pulse generator. The two amplifiers have a common plate load resistor R_L, thus the voltage drop across R_L at any instant depends upon the sum of the instantaneous currents of both amplifiers.

Voltage E_1 has fairly wide positive pulses while those of E_2 are relatively narrow although both have approximately the same magnitude. Also, as indicated by the vertical dashed lines, the leading edges of the E_1 pulses occur slightly ahead of those of E_2. Due to the time difference between the leading edges of these pulses, the first portion of the E_o flat top forms a small step from which the narrow pulse rises.

So far as the output terminals of the circuit of Figure 14 are concerned, resistor R_1 is in series with the application points of E_2. Therefore, part of E_2 is dropped across R_1, tending to make the upper end of R_1 negative and thus reduce the positive voltage existing at this point due to the E_1 pulse. Thus, the narrow pulse portions of E_o have less amplitude than the E_2 pulses applied across R_2.

Figure 16 shows that the addition of a sawtooth voltage E_1 to a rectangular voltage E_2 results in an output E_0 with a **trapezoidal wave** form. The negative alternations of E_2 occupy the same interval of time as the steep portions of the sawtooth wave. E_2 may be considered a series of closely spaced, broad positive pulses upon which E_1 is superimposed to form E_o.

Conversely, E_2 may be considered a series of narrow negative pulses which, at the end of each slowly rising portion of E_1, cause E_o to drop quickly to a low value. The sharply falling portions of E_1

then reduce E_o to its negative peak which occurs at the end of the E_2 pulses. When E_2 returns to its positive value, E_o rises to the value of E_1 at the beginning of the sawtooth cycle. Then E_o rises in the positive direction with E_1 to begin the next cycle.

The nuclear instruments employ wave shaping circuits necessary in high speed counting operation.

Courtesy Tracerlob, Inc.

The result of adding a sine wave voltage E_1 and a positive pulse voltage E_2 is shown in Figure 17. As indicated by the vertical dashed lines, the phase relationship is adjusted so that the pulses arrive at the instant E_1 is changing through zero, from its positive to its negative alternations. Thus, the output E_o consists of a sine wave voltage with the positive pulses superimposed as shown. These pulses may be shifted up or down the sine wave curve by changing the phase of E_1 with respect to E_2. For example, if the phase of E_1 is advanced with respect to that shown, the pulses will be at a lower point on the sine wave curve in E_o, and thus rise to a lower positive value. If the phase of E_1 is retarded, the pulses will fall at a higher point on the sine wave curve, and consequently rise to a higher positive output.

IMPORTANT DEFINITIONS

CLIPPER—An electron tube stage which functions to pass some desired portion only of the signal voltage applied to its input.

DIFFERENTIATING NETWORK—[*dif* er EN shi ayt ing NET werk]—A high pass RC or RL network.

INTEGRATING NETWORK—[*in* ti GRAYT ing NET werk]—A low pass RC or RL network.

RECTANGULAR WAVE—A voltage which changes quickly from one peak to the other and then remains constant until it snaps back to its original peak where it again remains constant to complete the cycle.

SAWTOOTH WAVE—A voltage which changes at a constant rate from its peak at one polarity to its peak of the opposite polarity, and then snaps back to the first polarity peak to complete the cycle.

TRAPEZOIDAL WAVE—[*trap* i ZOY d'l wayv]—A voltage which quickly changes from one peak to an intermediate value, changes steadily from this voltage to the new peak and then snaps back to the original peak.

STUDENT NOTES

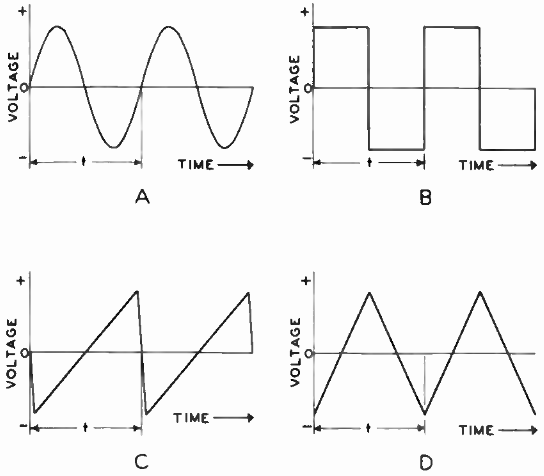

FIGURE 1

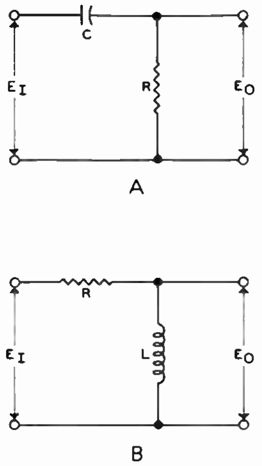

FIGURE 2

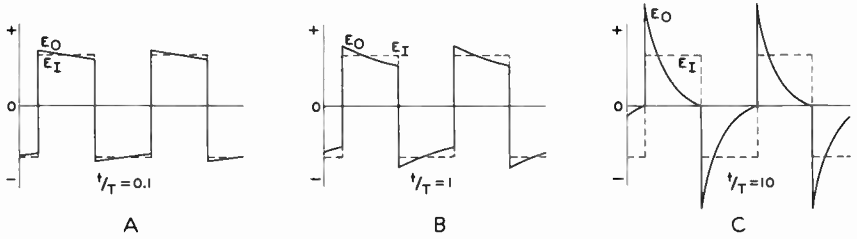

FIGURE 3

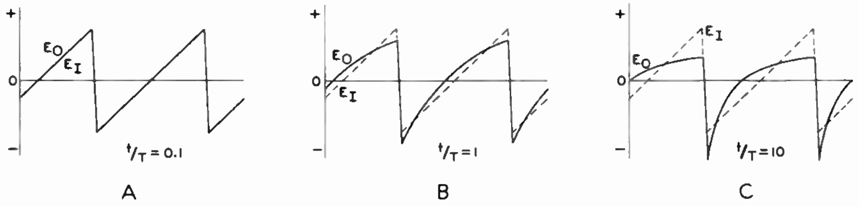

FIGURE 4

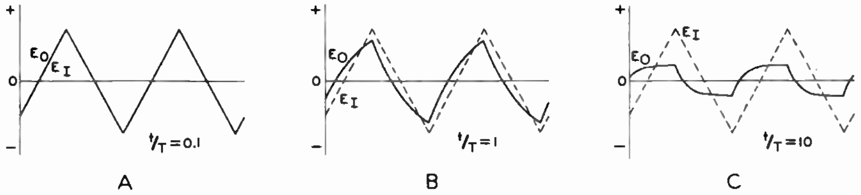

FIGURE 5

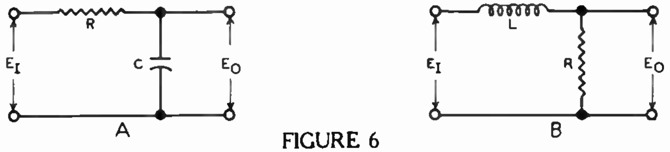

FIGURE 6

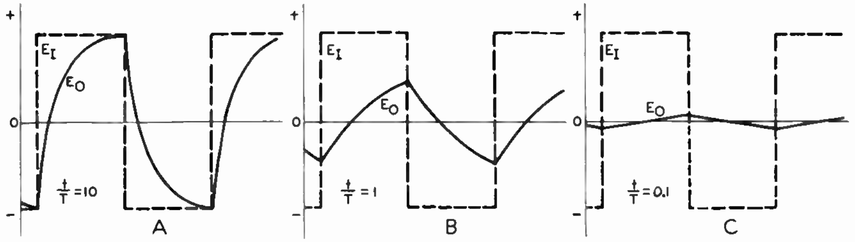

FIGURE 7

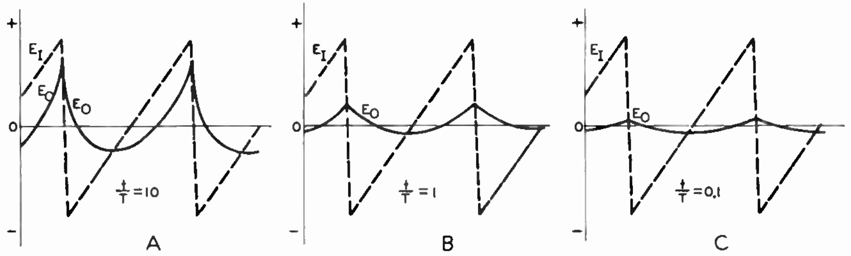

FIGURE 8

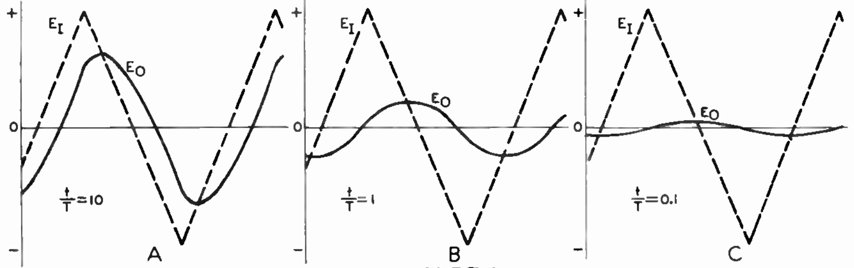

FIGURE 9

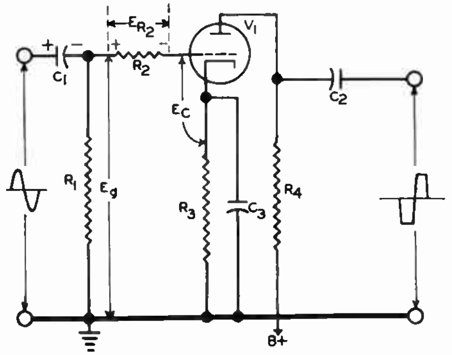

FIGURE 10

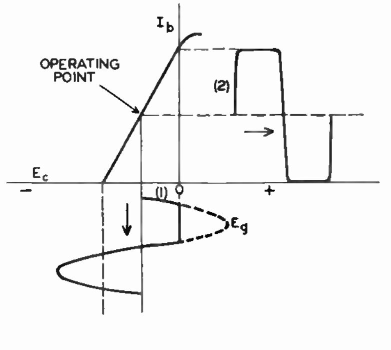

FIGURE 11

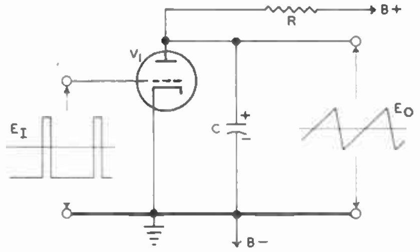

FIGURE 12

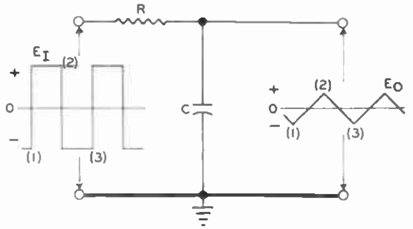

FIGURE 13

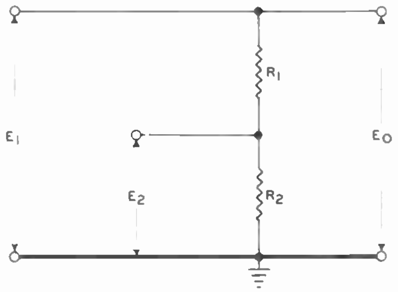

FIGURE 14

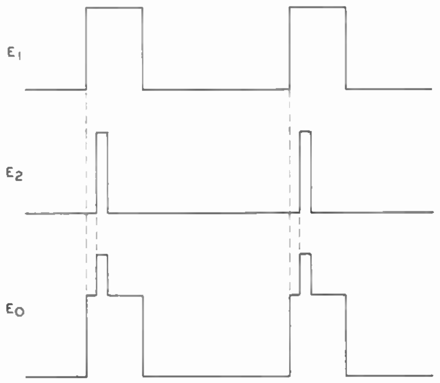

FIGURE 15

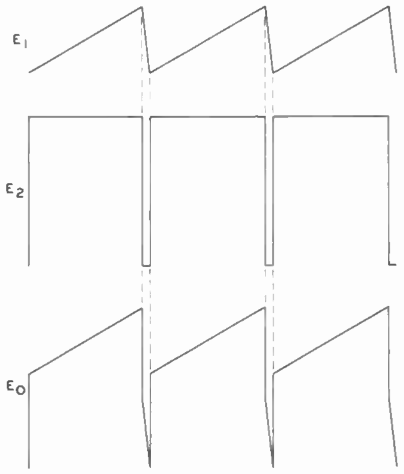

FIGURE 16

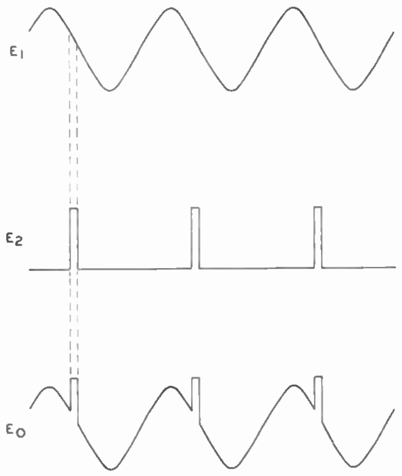

FIGURE 17

Cut along this line and send in for grading.

DeVRY Technical Institute

Affiliated with DeFOREST'S TRAINING, INC.

4141 WEST BELMONT AVENUE CHICAGO 41, ILLINOIS

QUESTIONS

Wave Shaping—Lesson TPC-6A

1

How many advance Lessons have you now on hand? ....

Print or use Rubber Stamp.

Name .... Student No. ....

Street .... Zone .... Grade ....

City .... State .... Instructor ....

Write your answers on the "Ans." line below each question. If more space is needed use reverse side of this page.

1. **What type of wave-form is indicated by (a) Figure 1A, (b) Figure 1B, (c) Figure 1C, and (d) Figure 1D?**

Ans. ....

....

2. **When a rectangular wave is applied to the input of a differentiating circuit, is the output voltage greater or less than the input when t/T = 10?**

Ans. ....

....

3. **When a sawtooth wave is applied to the input of a differentiating circuit, is the output voltage greater or less than the input when t/T = 10?**

Ans. ....

....

4. **What happens to the output voltage and wave-form when a triangular wave is applied to a differentiating circuit if t/T = 10?**

Ans. ....

....

5. **What happens to the output voltage and wave-form when a rectangular wave is applied to an integrating circuit if t/T = 0.1?**

Ans. ....

....

6. **What happens to the output voltage and wave-form when a sawtooth wave is applied to an integrating circuit if t/T = 0.1?**

Ans. ....

....

7. **What is the name of the electron tube circuit which provides a rectangular wave output from a sine wave input signal?**

Ans. ....

....

8. **What is the basic action of the circuit of Figure 12 which produces the sawtooth output voltage E_o?**

Ans. ....

....

9. **In the partial circuit of Figure 12, what controls the frequency of the output voltage E_o?**

Ans. ....

....

10. **When a high amplitude rectangular wave is applied to an RC integrating network with a small t/T ratio, what is the shape of the output wave?**

Ans. ....

....

FROM OUR *President's* NOTEBOOK

HABIT

Habits are like mushrooms. They are either Good—and good for us, or they're Bad—and likely to poison us. In neither family is there a species that is lacking in potency to benefit or to harm.

A Habit, says Webster, is "an inclination acquired by repetition" which either helps us in the performance of given duties, or lowers our resistence to wrong impulses or temptations. However, the points to be made are:

We CAN acquire Good Habits and we CAN mould our careers and our lives around them, thus eliminating the Bad Ones by not having room for them.

Look around you for Good Habits to develop. One can become habitually Accurate, Broadminded, Cleanly, Discriminating, Efficient, Friendly, Generous, Hopeful, Industrious—all the way down the alphabet. And by the time you get just a few of these good habits fixed, you'll find yourself too busy to indulge yourself in even such mild bad Habits as biting your nails or parking gum in ash-trays.

Yours for success,

E. B. DeVry

PRESIDENT

PRINTED IN U.S.A.

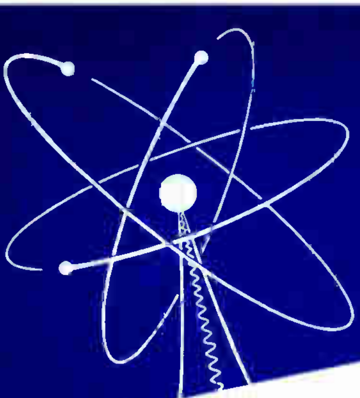

CLIPPERS AND GATES

Lesson TPC-7A

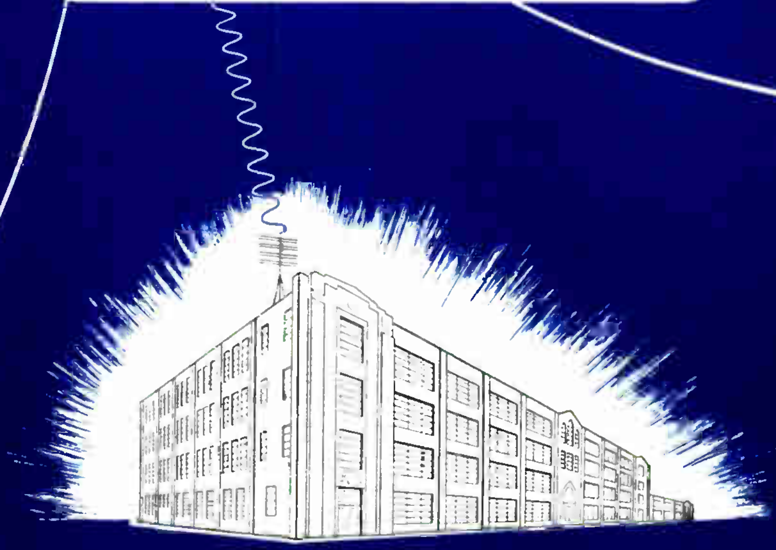

DeVRY Technical Institute

4141 W. Belmont Ave., Chicago 41, Illinois
Affiliated with DeFOREST'S TRAINING, INC.

TPC-7A

CLIPPERS AND GATES

DeVRY Technical Institute

4141 Belmont Ave.
Chicago 41, Illinois

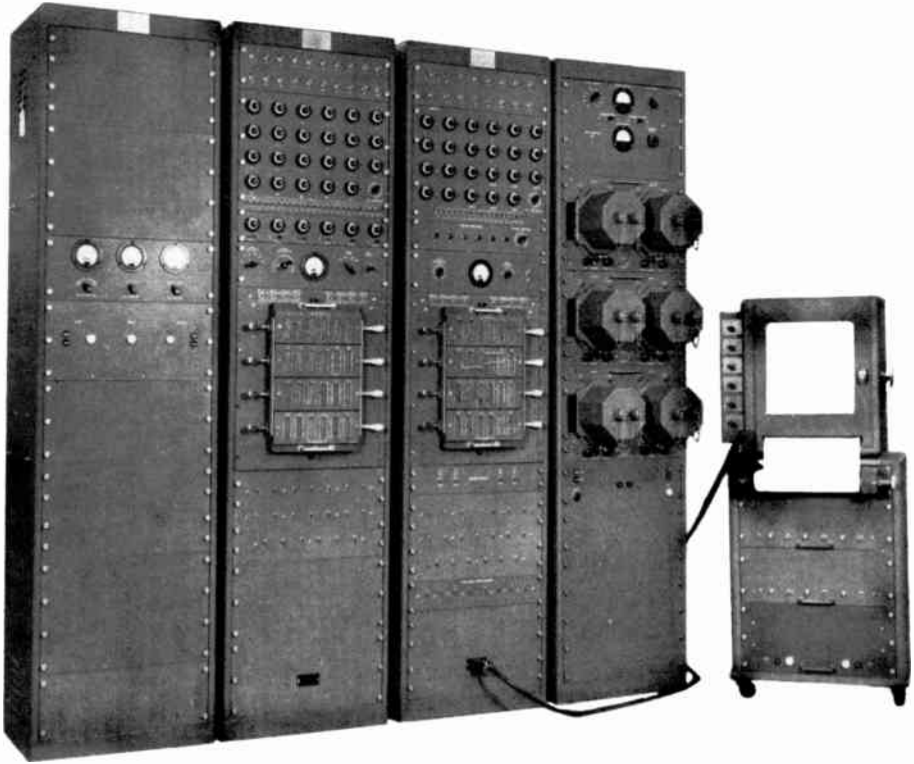

Analog computers, often called "electronic brains," employ a large variety of pulse circuits. Clippers and gates are used frequently.

Courtesy Reeves Instrument Corp.

Pulse Circuits

CLIPPERS AND GATES

Contents

Life is rich with opportunity, and you elect for yourself every morning whether the day will be fruitful of results or not.

—Grenville Kleiser

CLIPPERS AND GATES

PULSE CIRCUITS

To properly "drive" the different circuits employed in various types of electron equipment, it is necessary to generate certain controlling voltages which have a specific wave-form, amplitude, repetition frequency, and timing. For this purpose, a number of circuits which produce rectangular, sawtooth, or pulse type voltages, have been developed. Also employed are circuit elements which emphasize some particular characteristic of a given voltage wave, while others pass only some desired portion of the wave. These various types of units include pulse and rectangular wave generators, integrating and differentiating networks, as well as several other circuits described in this lesson.

RELAXATION OSCILLATORS

A common type of pulse generator, the relaxation oscillator, may be used in combination with an RC circuit to produce a voltage wave which differs in shape from the output of the oscillator. Examples of this method are the production of sawtooth voltages to drive the CRT deflection plates in an oscilloscope, and the production of trapezoid shaped voltages for use in television equipment.

Thyratron Sawtooth Generator

A hot-cathode arc-discharge tube, or THYRATRON, often is employed to produce a sawtooth voltage output when connected to an RC circuit as shown in Figure 1. A positive voltage is applied through resistors R_1 and R_2 to the anode of thyratron tube V_1. Applied to the grid, a negative bias E_c is such that tube V_1 is prevented from firing at relatively low anode potentials. It will become conductive only when the anode potential is raised above a specific positive value. When it does, R_2 limits the anode current to a safe value.

Connected from the junction point (1), between R_1 and R_2 to ground, capacitor C_1 is in parallel with R_2 and plate cathode circuit of V_1. The charge on C_1 determines the potential difference between the anode of V_1 and ground at any instant. With C_1 completely discharged, the anode is at zero voltage, and thus V_1 is nonconductive when the B+ voltage is applied. However, with B+ applied, the capacitor charges through the series resistor R_1, as electrons flow from ground (B−) to the lower plate of the capacitor, and from the upper plate, through R_1 and the power supply to ground. This electron flow causes C_1 to be charged to the polarity indicated.

With tube V_1 nonconductive, it provides an extremely high impedance in parallel with C_1, so that resistor R_1 and capacitor C_1 form a voltage divider from B+ to ground. As C_1 charges, a larger portion of the B+ voltage appears across it and a smaller portion across R_1. Since there is no current in R_2 at this time, the anode of V_1 has the same potential as the positive plate of C_1, thus the increasing capacitor voltage is applied to the tube.

cuit forms a low impedance in parallel with C_1. This action changes the impedance ratio of the voltage divider, to provide a greater portion of the B+ voltage across R_1 and less across C_1. However, to make this change the capacitor must discharge. Electrons flow from the negative plate, through V_1 and R_2, into the positive plate. Since the capacitor does not become completely discharged, the polarity of the plates remains as indicated.

A limiter is employed in the FM radio receiver to reduce noise due to amplitude variation of the FM signal.

Courtesy Motorola Inc.

When the anode reaches a critical positive potential, the tube fires or becomes conductive and permits an electron flow from ground through V_1, R_2, and R_1 to B+. With V_1 conductive, the V_1R_2 cir-

The discharge circuit of C_1 contains the resistance of tube V_1 in series with R_2, and therefore, the discharge action is not instantaneous, but requires a definite time. However, compared to the charging interval, the discharge time is short as indicated by the steep fall of the E_o curve, Figure 1.

As C_1 discharges, the voltage at point (1) is reduced, and the voltage drops across R_2 and V_1 are decreased. Finally, the voltage falls to the low positive value, where deionization occurs, and tube conduction stops. With V_1 nonconductive, the impedance of the R_2V_1 circuit becomes large, and the capacitor charges through R_1 to begin a new cycle. During each cycle, C_1 requires much more time to charge than it does to discharge because the resistance of R_1 is much higher than the total series resistance of R_2 and ionized tube V_1 in the discharge circuit. Thus, due to this difference, the voltage E_o across C_1 has the indicated sawtooth waveform.

The relaxation oscillator used in this generator provides a square wave voltage for test purposes.
Courtesy Reiner Electronics Co.

Blocking Oscillator Sawtooth Generator

The voltage wave produced at the grid of a blocking oscillator tube also may be employed to drive a sawtooth generating circuit. One common circuit arrangement is shown in Figure 2. The BLOCKING OSCILLATOR is composed of tube V_1, transformer T, capacitor C_1, and resistors R_1 and R_2. V_2 serves as the discharge tube for the sawtooth forming circuit of R_3 and C_2.

Essentially, the feedback and oscillatory actions in the blocking oscillator circuit are the same as in the typical oscillators employed to generate sine wave voltages. In the circuit of Figure 2, transformer T couples the feedback energy from the plate circuit to the grid of V_1, causing oscillations at a fundamental frequency mainly determined by the inductance and distributed capacitance of the grid winding of transformer T. However, after each negative swing of the oscillator grid voltage, V_1 is held cut off for a period of time due to the long time constant of grid leak network R_1C_1. Thus, oscillation is "blocked" while C_1 discharges slowly through R_1 and the grid winding of T. Due to this blocking action, the grid voltage has the wave-form indicated by the curve E_g.

As shown, the grid of the discharge tube V_2 is connected directly to the grid of V_1, therefore, the E_g wave is also applied to the V_2 grid circuit. The relatively long duration negative alternations maintain V_2 cut off for long intervals of time compared with the short intervals in which the positive alternations allow this tube to conduct. Thus, the V_2 plate current has the form of short pulses as indicated by the curve I_p.

While V_2 is cut off, the applied B+ voltage charges capacitor C_2 through resistor R_3. Electrons flow from ground to the lower plate of C_2, and from the upper plate, through R_3 to B+, charging C_2 to the indicated polarity. During the short intervals that V_2 is conductive, C_2 discharges through this tube, with electrons flowing from the negative plate of C_2, through V_2 to the positive plate of the capacitor.

When conductive, V_2 has considerably less resistance than R_3. Therefore, C_2 charges slowly through R_3 during the long interval of time that V_2 is cut off, and then discharges rapidly during the short interval that it is conductive. Because of this slow charge and rapid discharge action, the voltage across C_2 has the sawtooth waveform indicated by curve E_o.

In a circuit of this type, the amplitude and wave-form of the sawtooth output E_o depend mainly upon R_3 and C_2, either or both of which may be made variable if desired in a particular application. Since V_2 is driven by the oscillating grid voltage of V_1, the waveform of E_g determines the ratio of the conduction time to the cutoff time of V_2, and thus affects the wave-form of E_o to a limited extent. More important, the frequency of E_g determines the frequency of E_o, and since the interval during which V_1 is blocked depends upon the time constant R_1C_1, the frequency of E_g and of the sawtooth output may be varied over a small range by varying R_1, C_1, or both.

Multivibrator Pulse Generator

The MULTIVIBRATOR circuit shown in Figure 3A employs a double triode tube V_1V_2. Briefly, the action of this circuit is such that triode V_1 is cut off when V_2 is conducting, and is permitted to conduct while V_2 is cut off. Each tube conducts and cuts off alternately, thereby causing its plate voltage to shift between maximum and minimum values abruptly, as indicated by the rectangular plate voltage wave-form E_I.

By proper choice of circuit components, the wave-form may be made symmetrical, with positive and negative alternations of equal duration, or the plate voltage of V_2 may be produced with unequal positive and negative alternations as indicated by curve E_I. The waveform shown with long positive and short negative alternations is produced when V_2 is cut off for a long time relative to the interval in which it conducts. When V_2 is cut off, there is no plate current in or voltage drop across resistor R_5, and therefore, the plate of V_2 is at B+ potential during this time. When V_2 is conductive, the resulting voltage drop across R_5 causes the V_2 plate to drop to the lower voltage indicated by the negative alternation of E_I.

A sawtooth voltage may be developed by connecting the capacitor C_2 of Figure 3B across the output terminals of the multivibrator of Figure 3A. With this arrangement, tube V_2 acts as the discharge tube for the sawtooth forming circuit consisting of resistor R_5 and capacitor C_2. Thus, when V_2 is cut off, the applied B+ voltage causes C_2 to charge slowly through R_5, and when V_2 is conductive, C_2 is permitted to discharge through the tube in the usual manner. This action causes the voltage across C_2 to vary as indicated by the curve E_o in Figure 3B. On the other hand, when the differentiating circuits R_6C_2 of Figure 3C is connected across the multivibrator output terminals, the pulse voltage E_o is produced if the t/T ratio of the R_6C_2 network is sufficiently long.

LIMITERS

An electron tube circuit which passes only some desired portion of the signal applied to its input is known as a **limiter** or **clipper.** That is, the limiter blocks all portions of the signal which either exceed or are lower than some specific amplitude. It is NOT the purpose of the limiter to attenuate signal components in one frequency range more than in another, as is the case with the filter networks.

Diode Clippers

Limiting action can be accomplished by means of the diode circuit of Figure 4 in which an input voltage E_I is applied to the tube V_1 and resistor R_1 in series. The resulting diode current produces a voltage drop across R_1 which forms the output E_o. Since the diode V_1 is connected in series between the input and output terminals of the circuit, this arrangement is called a SERIES DIODE LIMITER.

With the plate of V_1 connected to the input terminal, the positive pulses of E_I drive the plate of V_1 positive with respect to the cathode, and the diode conducts. Forming the diode current, electrons flow from the cathode to the plate of V_1, through the source of E_I, and through resistor R_1 to the cathode. Due to this direction of flow, the upper end of R_1 is made positive with respect to the lower end.

The wave-forms of both the diode current and the voltage drop across R_1 have the same shape as the positive pulses of E_I. Since the negative pulses of E_I cause the plate of V_1 to be negative with respect to the cathode, they cause no diode current. Thus, the limiter circuit of Figure 4 removes the negative pulses of the signal and provides the output voltage E_0 consisting of positive pulses only.

The diode tube V_1 may be considered a variable impedance element which presents a very high impedance to negative input pulses and a low impedance when the input pulses are positive. Also, tube V_1 and resistor R_1 form a voltage dividing network across which the input signal E_I is applied. Due to the low impedance of V_1 when the input signal is positive, almost all of E_I appears across resistor R_1 to provide the indicated positive pulse output. On the other hand, due to the high impedance of V_1 when the input signal is negative, practically all of E_I appears across V_1, and for practical purposes, the drop across R_1 is zero.

As shown in Figure 5, the connections to the plate and cathode of the diode may be reversed when it is desired to block the positive pulses and pass the negative pulses of the applied signal. In this case, the negative pulses cause the cathode of V_1 to become negative with respect to the plate. As this action is equivalent to making the plate positive with respect to the cathode, conduction of the diode results.

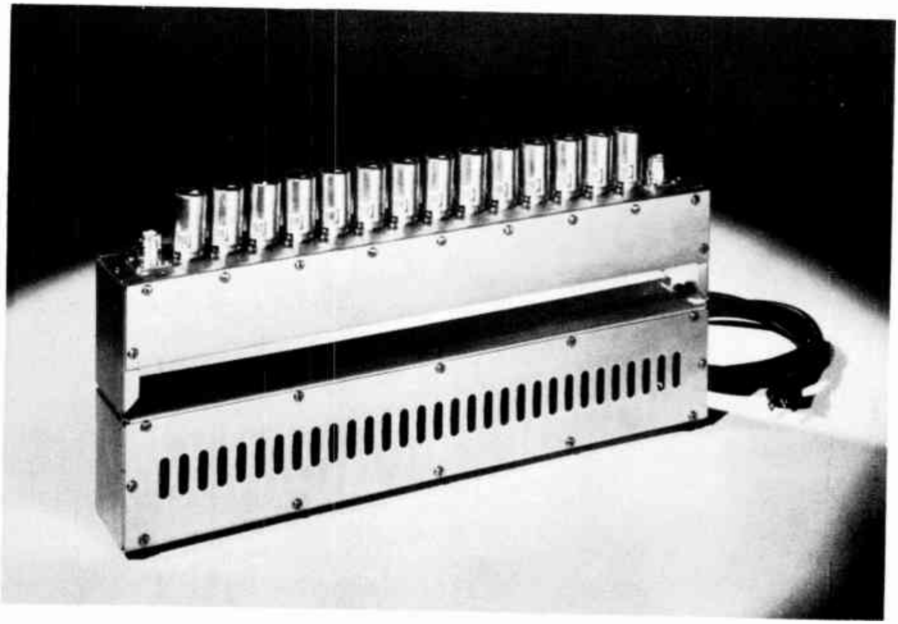

A chain pulse amplifier. This unit is designed to amplify high frequency, pulse voltages with very little change in wave-form.

Courtesy Spencer-Kennedy Laboratories, Inc.

The direction of the diode current is such that electrons flow down through resistor R_1 to make its upper end negative. The voltage drop thus produced across R_1 has the form of the negative pulses indicated by curve E_o. Since the positive pulses of E_I make the cathode of V_1 positve with respect to the plate, they do not produce diode current, and no positive pulses are produced in the circuit output.

The cable is needed to supply power and control pulses to the camera as well as transmitting the picture pulses from the camera to the control console.

Courtesy Polarad Electronics Corp.

Again, considering tube V_1 and resistor R_1 as a voltage divider for the circuit of Figure 5, the low impedance of V_1 causes almost all of E_I to appear across R_1 when the input signal is negative. When the input signal is positive, practically all of E_I appears across V_1 due to the high impedance of the diode and, therefore, this portion of E_o is zero.

Figure 6 shows a series diode limiter circuit in which a voltage source E_{bb} applies a positive bias through resistor R_1 to the cathode of tube V_1. The plate of V_1 is connected to the input terminal as in Figure 4, therefore only positive pulses of E_I can produce diode current. In addition, due to the positive voltage on the cathode, the diode current occurs only during the portions of the positive pulses of E_I which make the plate of V_1 more positive than the cathode bias E_{bb}.

As shown in Figure 6, the ungrounded output terminal connects through resistor R_1 to the battery, therefore E_{bb} is present at this terminal at all times. When diode V_1 conducts during the positive peaks of the E_I pulses, the diode current produces a voltage drop across R_1 with the same form as these positive peaks. Thus, the positive pulses across R_1 add to the bias E_{bb} to provide the output indicated by curve E_o in the Figure. Determined by the bias, the **clip level** is that voltage above which the input signal E_I is passed.

If connections to the diode of Figure 6 are reversed, the circuit arrangement of Figure 7 is obtained. In this case, E_{bb} biases the plate positive so that conduction occurs at all times except during the short intervals that the positive peaks of E_I drive the cathode more positive than the bias. Due to the diode current, the upper end of R_1 is negative, and this voltage opposes E_{bb} to produce the output signal indicated by curve E_o. For this circuit, the clip level is that point below which the input signal E_I is reproduced in the output.

A parallel diode limiter circuit is shown in Figure 8. Here, diode V_1 is connected in shunt with the output terminals, and as before, the input signal E_I is applied to resistor R_1 and tube V_1 in series. With no bias in the circuit, V_1 conducts during the entire time of the positive pulses of E_I, and is nonconductive during the negative pulses.

Therefore, during the positive pulses of E_I, the resistance of R_1 is high compared to the impedance of V_1, and the voltage divider action is such that practically all of E_I appears across R. During the negative pulses, practically all of E_I appears across V_1, the impedance of which now is high compared to the resistance of R_1. Dropped across R_1, the positive pulses do not appear in the output of the circuit, leaving the negative pulses across V_1 to provide the output E_o.

With the diode connections reversed as shown in Figure 9, conduction occurs during the negative pulses of E_I, but not during the positive pulses. Therefore, during the positive pulses, the impedance of V_1 is high compared to the resistance of R_1, and these portions of E_I appear across V_1. During the negative pulses, the impedance of V_1 is low compared to the resistance of R_1, and these pulses appear across R_1. Taken across V_1 only, the output E_o has the positive pulses indicated.

As with the series diode limiters, a bias voltage may be applied to the cathode or plate of the diode in either of the circuits of Figure 8 or Figure 9, and will result in the clip level being at some point other than at zero. In fact, in any of the limiters of Figures 4 to 9 inclusive, either a positive or a negative bias may be used to fix the clip level at some desired point above or below zero.

Triode Limiters

In addition to diodes, triode tubes can be employed as limiters or clippers as illustrated by the circuit in Figure 10A. Here, the cathode of tube V_1 is grounded, and in the grid circuit, the components

C_1 and R_1 have a time constant such that the applied signal causes a desired grid leak bias to be developed across resistor R_1. To review briefly, this bias is produced by the "diode action" in the grid-cathode circuit of V_1, when the grid is driven positive by peaks of the input signal E_I.

During these peaks, electrons flow from the cathode to the grid and to the negative plate of C_1. From the positive plate of C_1, the electron path is completed through the signal source to ground, and from ground to the cathode of V_1. During the longer intervals between positive peaks of E_I, capacitor C_1 discharges to some extent. As electrons cannot pass from the grid of V_1 to the cathode, the discharge path is from the negative plate of C_1, through R_1 to ground, and from ground through the signal source to the positive plate of C_1.

Since the resistance of R_1 is much greater than that of the cathode-to-grid of V_1 during the periods of grid current, the charge time constant for C_1 is much shorter than for discharge. Hence, the short duration positive peaks of E_I recharge C_1 by an amount equal to the discharge between peaks.

Thus, maintained across resistor R_1 the bias E_c depends upon E_I, C_1, R_1, and the cathode-to-grid resistance of tube V_1. Since it is the only bias in the grid-cathode circuit, E_c determines the operating point of tube V_1. Plate current can exist only when the grid is less negative than cutoff, and plate voltage variations are produced only when plate current develops a voltage drop across resistor R_2 to make the plate voltage less positive than during tube cutoff.

Hence, the desired clip level can be established by choosing circuit components which provide the proper negative bias E_c with respect to the tube cutoff bias. If E_c is equal to the cutoff bias, the entire positive pulses of E_I cause plate current and are reproduced in the output, while the negative pulses drive the grid more negative than cutoff and thus are not reproduced.

The curves of Figure 10B illustrate operating conditions in which E_c is greater than required for cut off. Therefore, the tube remains nonconductive until the positive portion of E_I reduces the grid voltage below cutoff to produce the plate current pulse I_b. These positive current pulses reduce the plate voltage to produce the negative E_o pulses of Figure 10A, which correspond to the portions of the E_I pulses above the indicated clip level. However, due to the amplification of the triode tube circuit, the E_o pulses have greater amplitude than the corresponding portions of the input signal.

LIMITERS WITH RC CIRCUITS

Often limiters are employed in conjunction with various RC circuits to obtain the exact voltage wave-form required for some particular application, in much the same manner as described for relaxation oscillators. Although the diode limiters provide better fidelity in the output wave, most applications employ triode limiters, because of the amplification which can be obtained. However, with a triode limiter, only the portion of the input wave above the clip level can be reproduced. Hence, a diode must be used when it is necessary to pass the portion of the wave below the clip level and block the portions above this level.

This eloborote communicotion receiver hos provisions for switching the limiter in or out of the signol circuit.

Courtesy Collins Rodio Co.

Pulse Narrowing

A given rectangular pulse can be reduced in width or narrowed by means of the RC differentiating circuit and cascade triode limiters shown in the circuit of Figure 11. The pulse to be narrowed, E_I, is applied to differentiating circuit C_1R_1. Compared to the duration of the E_I pulse, the time constant of the R_1C_1 network is short, thus the voltage developed across R_1 has the wave-form indicated by curve E_g. Tube V_1 is operated at a

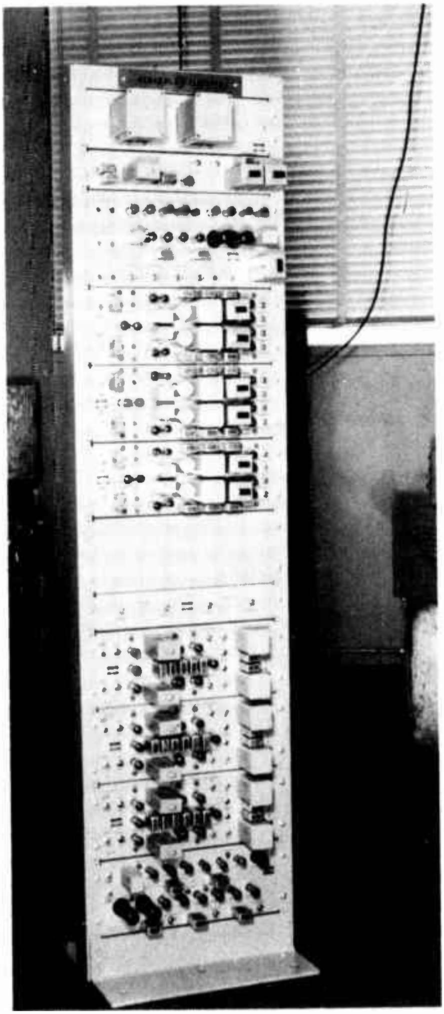

A six channel two way multiplexing terminal used in signal transmission. Limiters, gates, and other pulse control networks are essential in this equipment.
Courtesy General Electric Co.

very low plate voltage so that cut off occurs for a small grid bias. Therefore, the grid leak bias which is developed across R_1 is greater than cutoff and as a result, the clip level occurs at the point indicated.

The portions of E_g above the clip level cause variations of V_1 plate current which produce the negative pulse output voltage E_R. The V_2 limiter clips most of the negative E_R pulses leaving only the portion above the indicated clip level to produce plate current in V_2. Thus, the output voltage E_o consists of positive pulses having the indicated wave-form, and derived from a small portion of E_g, these pulses are considerably narrower than the original signal E_I.

Pulse Delaying

When it is necessary to delay a pulse for some desirable time interval, an integrating circuit and two limiting circuits can be used as pictured in Figure 12. Applied to the integrating circuit R_1C_1, signal E_I charges and discharges C_1 through R_1 in the usual manner, and thus produces the voltage wave-form E_a, across C_1. Due to the grid leak bias across R_2, the V_1 limiter responds only to the portion of E_a above the indicated clip level, and there is no V_2 plate current until a certain delay interval t_d after the leading edge of the E_I pulse.

Beginning at the end of the delay interval, a negative pulse, E_p is clipped at the indicated level to produce the amplified, rectangular output pulse E_o. Since the V_2 plate current begins after the delay interval, the leading edge of the output pulse E_o is delayed by the interval t_d with respect to the original pulse E_I. The interval t_d depends upon the shape of the E_a wave, and upon the clip level employed at this point. The shape of E_a depends upon the time constant R_1C_1 and the amplitude and duration of the E_I pulse.

ECO—LIMITER SAWTOOTH GENERATOR

The circuit of Figure 13 illustrates a method by which a sawtooth voltage is produced by differentiating and clipping the output of an oscillator. The circuit of V_1 is an electron-coupled oscillator, the fundamental frequency of which is determined by the inductance and distributed capacitance of coil L. The control grid voltage variations alternately drive the plate current to saturation and cutoff, causing the plate voltage to have the squared wave shape indicated by curve E_p.

When applied to the differentiating circuit, C_3R_4, E_p changes to the signal form indicated by curve E_g. Appearing across R_4, the voltage E_g is applied to the grid of limiter tube V_2. Hence, V_2 conducts during the short intervals that the positive E_g alternations are above the clip level, and is cut off during the long intervals between. Charging slowly through the high resistance of R_5 when V_2 is cut off, capacitor C_4 discharges rapidly through the low resistance of V_2 when it is conductive, thus forming the indicated sawtooth voltage E_o.

CLAMPING CIRCUITS

When it contains an alternating component only, a signal voltage swings positive and negative with respect to some zero reference such as the ground potential as shown in Figure 14A. In many electronic systems, a signal contains a d-c component, which may be either positive or negative with respect to ground, and when present, it forms a reference above and below which the alternating component varies as shown in Figures 14B and 14C, respectively. In some applications, only the alternating component of the signal is needed, and the d-c component is unimportant, while in others, both the a-c and d-c components are required to provide proper operation of a circuit. In still other cases, it becomes necessary to change the reference voltage to some higher or lower level, or possibly to one of opposite polarity.

Furthermore, for some needs it is desirable to provide a reference such that either the positive or negative peaks of the a-c component are held to some constant value, either above, at, or below ground potential. When employed for this purpose, a circuit is known as a **clamp.**

As an example, if it is desired to "clamp" the negative peaks of the a-c signal component at 5 volts above ground, then the reference must be such that all variations occur in the positive voltage range, while on each "negative" alternation, the signal voltage swings down to but not lower than +5 volts, as pictured in Figure 15A.

For a second example, if it is desirable to clamp the positive peaks of the a-c component at 10 volts above ground, the d-c component provided by the clamp circuit must be such that all signal variations occur in a range below +10 volts. Referring to Figure 15B, the d-c component or reference is negative with respect to ground or zero potential to prevent the positive peaks of the a-c component from exceeding +10 volts. In Figure 15C, with an a-c component of lower magnitude, its positive peaks are clamped at +10 by a positive d-c component or reference.

Also, if desirable, either the positive or negative peaks of the signal may be clamped at ground or zero potential, or at some d-c voltage below ground. The magnitude and polarity of the d-c reference voltage provided by the clamp circuit depends upon the particular clamping conditions required, and for some cases, upon the amplitude of the a-c component of the applied signal. When the a-c amplitude is constant, the d-c component remains constant, but if the a-c amplitude changes, then the d-c component must increase or decrease as required to hold the peaks of the a-c component at the desired clamping level.

When applied to an interstage coupling element such as a transformer or an RC network in which there is no conductive connection between the coupled stages, the a-c component of a signal is coupled but the d-c component is blocked. A clamping circuit may be employed to establish a new d-c reference level which corresponds to that which was lost in the coupling circuit. When used for this purpose, the clamp is referred to as a **d-c restorer.**

In Figure 16, the signal voltage E_I contains a positive d-c component such that at the peaks of its negative swings, E_I just reaches zero with respect to ground. Applied to the coupling circuit, R_1 C_1 the variations of E_I cause C_1 to alternately charge and discharge through R_1. At the same time, the capacitor is charged to the polarity indicated, due to the d-c component of E_I. Equal to the d-c component value, this voltage E_C forms the average voltage above and below which the charge on C_1 varies.

Insofar as the output terminals of the circuit are concerned, the average capacitor voltage E_C and

E_I are in series opposition. At any instant the voltage across R_1 is equal to the algebraic sum of these opposing voltages. When E_I is equal to E_C, the voltage E_O is zero. When E_I rises above E_C, E_O is positive, and when E_I is less than E_C, E_O is negative. At the peaks of the negative alternations, when E_I falls to zero, E_O is maximum negative and equal to E_C. Therefore, as indicated by the curve at the right in Figure 16, the d-c component of the signal is lost and the output voltage E_O varies above and below ground potential.

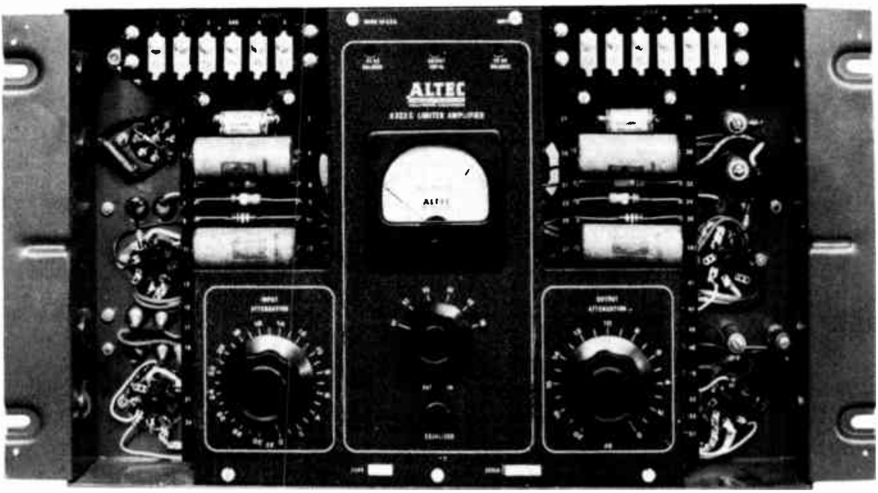

A front view with a part of the cover removed showing controls and circuits of a limiter amplifier.

Courtesy Altec Lansing Corp.

Diode Clamp

Figure 17 shows a diode clamp tube connected across the output terminals of the RC coupling network to form one type of d-c restorer. As before, the d-c component of E_I charges C to the indicated polarity.

To briefly review differentiating networks, in order for R_1 and C_1 in Figures 16 and 17 to transmit the input signal to the output terminals with minimum distortion and attenuation, a small t/T ratio of about 0.1 must be used. Then very little signal voltage is lost across capacitor C_1.

In Figure 16, capacitor C_1 charges and discharges through the same series resistance, R_1. For a short while after E_I is applied, E_c is less than the d-c component of E_I, and C_1 charges for a greater part of each cycle than it discharges. Therefore, E_c gradually increases until it is equal to the d-c component of E_I, after which the capacitor charges and discharges through R_1 by the same small amounts for each a-c cycle.

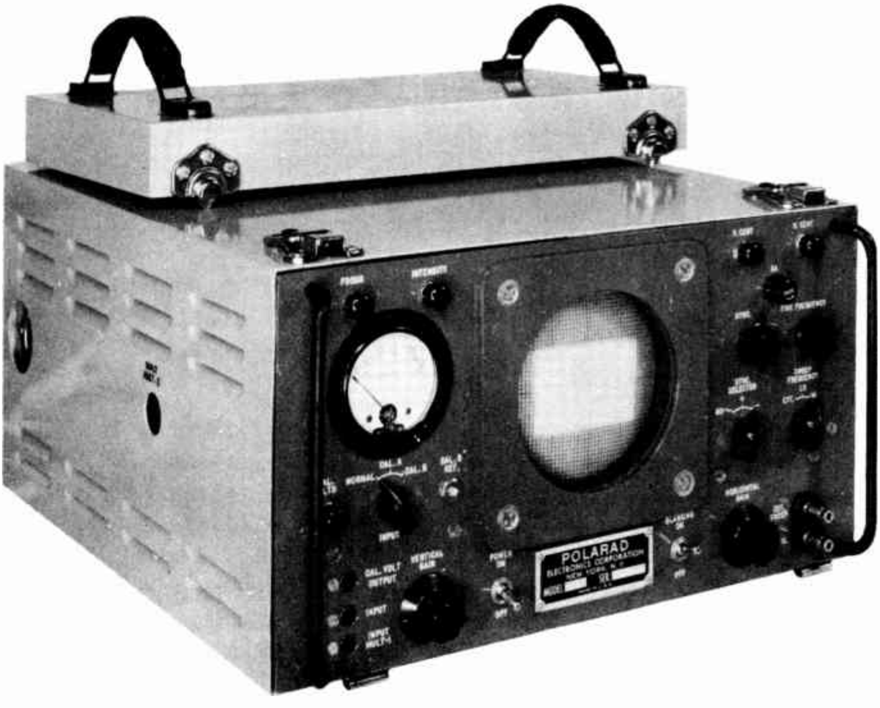

An elaborate oscilloscope with provisions for blanking the electron beam in the CRT during retrace time.

Courtesy Polarad Electronics Corp.

In the circuit of Figure 17, capacitor C_1 must charge through the high resistance of R_1 during the intervals that E_I is greater than E_c, because diode V_1 cannot conduct when its cathode is positive with respect to its plate. However, when E_I is lower than E_c, the algebraic sum of E_I and E_c has a value negative with respect to ground. Applied across R_1 and V_1, this negative voltage makes the cathode of the diode negative with respect to the plate, and V_1 conducts, discharging C_1.

Because of its relatively low resistance when conductive, diode V_1 permits C_1 to discharge almost completely during the short period that E_I is less than E_c. Due to this action, E_c gradually rises to some low value after which the capacitor discharges through V_1 by the same amount that it charges through R_1 for each a-c cycle of E_I. Thus, the average voltage E_C cancels the d-c component of E_I by only a small amount, and as shown in the Figure, the reference level of E_O is slightly less than that of E_I. The difference between these two references is the average voltage E_c on the capacitor.

Triode Clamp

In the clamp circuit of Figure 18, the grid leak bias formed across resistor R_1 forms a means of clamping the negative peaks of the a-c component of E_I to a constant level. With the cathode of triode tube V_1 connected to ground as shown, the peaks of the positive alternations of E_I drive the grid positive with respect to the cathode. The resulting cathode-to-grid electron flow charges capacitor C_1, and during the intervals between the positive peaks of E_I, this charge leaks off through R_1 to form a grid leak bias in the usual manner. In any circuit of this type, the magnitude of the bias voltage is directly proportional to the amplitude of the a-c component of the input signal. Thus, the higher the positive peaks of E_I, the greater the grid current, and the higher the bias.

For the tube of Figure 18 the E_c-I_b characteristic curve is given in Figure 19A. As indicated, the operating point is determined by bias E_C at any instant. Furthermore, when variations of grid signal E_g increase in amplitude, the resulting increase in E_C moves the operating point left on the graph. Because of this displacement of the operating point, the grid voltage swings only slightly more positive than before, and considerably less than it would be if E_c had not increased.

Corresponding to the variations in grid voltage, the variations of plate current are shown by the curve at the upper right in the graph of Figure 19A. Drawn along the upper peaks of this curve, the dashed line indicates that the plate current rises to almost the same peak for each cycle, regardless of variations in the individual cycles.

Finally, the curve of Figure 19B shows the plate voltage variations which form the output E_O of the circuit of Figure 18. The upper dashed line shows that, due to the shift in the operating point of the clamp tube V_1, the average plate voltage, which forms the d-c component of E_O, rises to a higher level when the a-c amplitude is greater. Because of the variations in the d-c reference level, the negative peaks of E_O are maintained at an almost constant level above ground, as indicated by the lower dashed line.

GATE CIRCUITS

A **gate** is a circuit which either passes or blocks the passage of an applied signal, depending upon the instantaneous control voltage; that is, the gate circuit is an electron switch. In some applications, the gating or switching action is referred to as KEYING. To provide a means of "opening" and "closing" the gate circuit, usually the control voltage has a rectangular waveform. Since the term GATE is employed to designate this control voltage as well as the circuit to which it is applied, to prevent confusion, the term is not used by itself in the following explanations; either the expression GATE CIRCUIT or GATE VOLTAGE is employed.

One type of gate circuit is illustrated in Figure 20. Coupled through capacitor C_1, the input signal E_I which is to be gated, is applied across resistor R_1 and triode V_1 in series. The gate voltage E_g is applied to the grid of the tube. The instantaneous plate voltage of V_1 forms the output voltage E_O.

Drawn to the right of the circuit in Figure 20, curves of E_I, E_g, and E_O illustrate the gating action. As shown, E_I consists of a series of positive pulses, and E_g has rectangular wave-form, the positive portions of which have longer duration than the negative portions. Since tube V_1 is operated at zero bias, E_g is the only voltage applied to the grid-cathode circuit of the tube. During the positive alternations of E_g the grid is positive with respect to the cathode, and because a very low B+ voltage is employed, the plate current reaches saturation. Due to the voltage drop caused by the plate current in R_1 at this time, the plate voltage, E_O, has the indicated low value. With the tube conducting heavily, its impedance is very low compared to the resistance of R_1. Therefore, practically the entire amplitude of E_I appears across resistor R_1, and therefore the output voltage E_O is low.

During its negative alternations, E_g drives the grid below cutoff. With tube V_1 cutoff, its impedance is high compared to the resistance of R_1, and so during this time, practically all of the applied E_I pulse appears across the tube, and is reproduced in the output. In addition, during the cutoff interval no voltage drop exists across R_1 other than that produced by E_I, and so the plate rises to the B+ voltage, thus forming the PEDESTAL portions of E_O.

Disabling Gates

Instead of being applied to a separate gate circuit, a gate voltage may be applied directly to some point in one of the regular stages in an electron unit to make it inoperative during certain desired time intervals. That is, the circuit conditions are such the stage is operative except when the gating pulse is applied. When used in this manner, the pulse is known as a **disabling gate.**

A typical example of the use of a disabling gate voltage is illustrated in Figure 21. A CRT is used as the indicating device for some type of electron unit such as an oscilloscope. Only the No. 1 grid and cathode circuits of the CRT are shown, and as indicated, the sawtooth time base voltage E_{ST} is applied to the horizontal deflection plates. The rectangular gate voltage is coupled by capacitor C_1 to the grid. At the lower right, the vertical dashed lines show that E_g is zero during the rising or forward sweep portions of E_{ST}, but is quite negative during the return sweep intervals. In this case, the purpose of the disabling gate voltage is to prevent the electron beam from producing visible traces on the CRT screen during the short intervals between its desired left-to-right sweeps. During these intervals, the negative gating pulses of E_g drive the grid to cut off, and thus an undesirable trace is prevented since no electron beam ex-

The dynamic noise suppressor in this amplifier is a gate circuit which passes the high frequency audio notes when enabled by a signal but otherwise blocks the needle scratch.

Courtesy Herman Hosmer Scott, Inc.

ists during the time that the time base voltage E_{ST} is changing rapidly from positive to negative peaks.

Enabling Gates

In other applications, gate pulses are employed to produce temporary operation of a stage which is otherwise inoperative, and when used in this way, the pulse is called an **enabling gate.** Such a circuit often is employed to provide a signal which consists of a group of pulses. By adjusting the duration or width of the gating pulses, the "bursts" of signal may be made to contain any specified number of pulses.

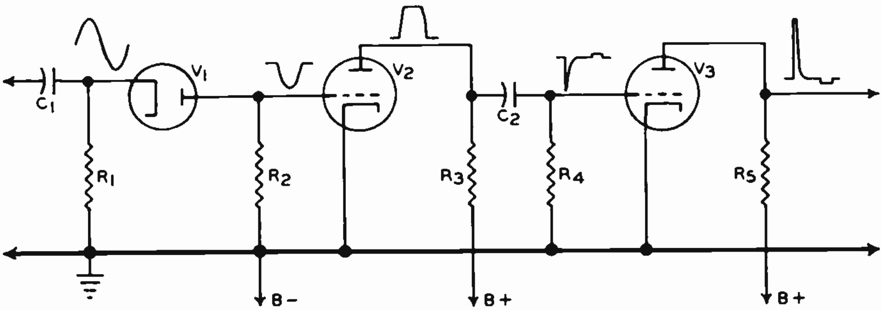

A wave shaping circuit found in radar equipment. It uses diode and triode clippers to provide "gates" of proper wave-form.

An example of a pentode gate circuit used for this purpose is shown in Figure 22. Indicated in block form, the pulse generator produces the voltage E_I which, for this example, consists of closely spaced positive pulses as shown at the upper right. The gate voltage generator produces the positive pulse, E_G, which has a width determined by the number of E_I pulses to be included in each group or burst of the output signal E_O.

In the gate circuit, the E_I pulses are applied to the control grid and cause corresponding variations of plate current whenever the circuit is operative. The E_G pulses form the only voltage applied to the screen grid of V_1, while the cathode is biased positive with respect to ground due to the charge maintained on C_2 by the cathode circuit current. Therefore, when E_G is zero, the screen grid of V_1 is negative with respect to the cathode, and plate current is reduced to zero. During this time, the plate has a high positive voltage because with no plate current no drop occurs across R_4. With V_1 nonconductive, the low amplitude E_I pulses cannot produce plate current to cause variations of plate voltage.

When the positive gating pulse E_G is applied, the positive screen grid permits a small plate current, and the drop across R_4 reduces the plate voltage slightly to produce the indicated pedestal.

During the period of the E_G pulse, the E_I pulses are able to vary the plate current in the usual manner. Since the E_I pulses are positive in this case, each one increases the plate current, thus reducing the plate voltage below the pedestal level to produce the negative-going E_O pulses.

Each pulse circuit has a multitude of possible applications. Naturally, there is space for only one of the more common applications for each circuit in this lesson. However, since these are typical, very little difficulty should be experienced when these basic circuits are encountered elsewhere.

* * *

IMPORTANT DEFINITIONS

CLAMP—A circuit designed to hold either the positive or negative voltage peaks at some fixed value above or below the ground potential.

CLIP LEVEL—That voltage above or below which the signal is passed.

CLIPPER—A circuit designed to remove all portions of a signal above or below some fixed amplitude.

D-C RESTORER—A clamp circuit designed to reinsert the direct current component of the signal which was lost in the coupling device.

DISABLING GATE—A pulse applied to make a circuit inoperative for the pulse duration.

ENABLING GATE—A pulse applied to an inoperative circuit to make it operative for the pulse duration.

GATE—A circuit or voltage pulse used to determine whether or not a signal is passed or blocked.

LIMITER—See Clipper.

STUDENT NOTES

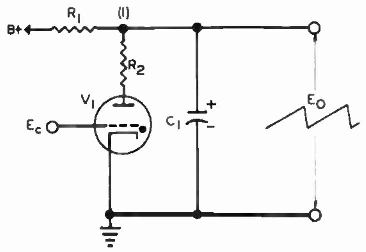

FIGURE 1

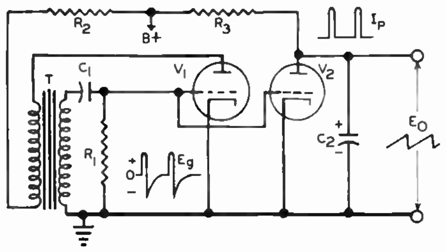

FIGURE 2

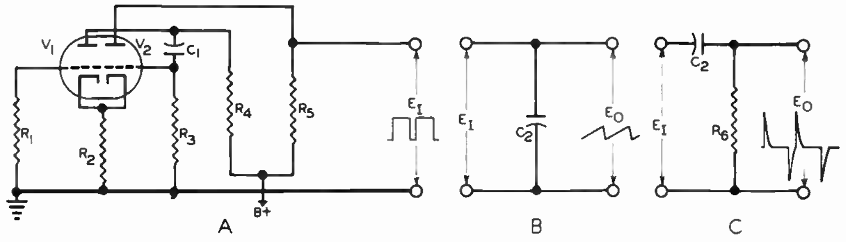

FIGURE 3

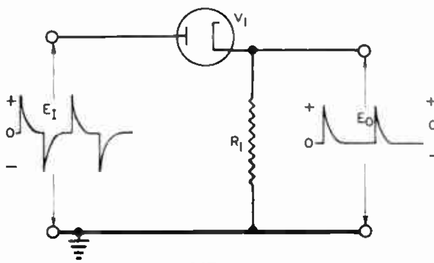

FIGURE 4

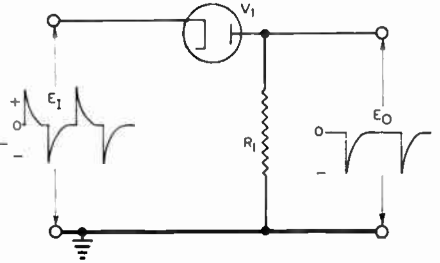

FIGURE 5

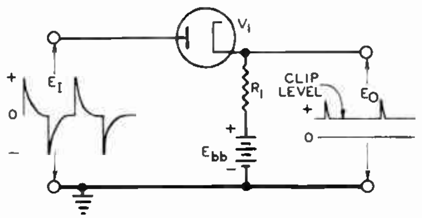

FIGURE 6

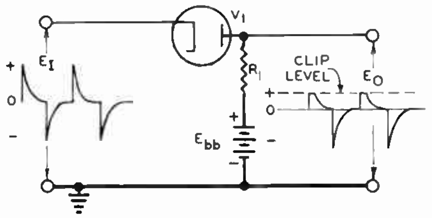

FIGURE 7

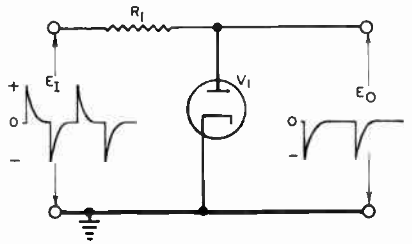

FIGURE 8

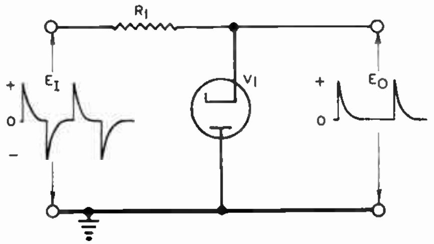

FIGURE 9

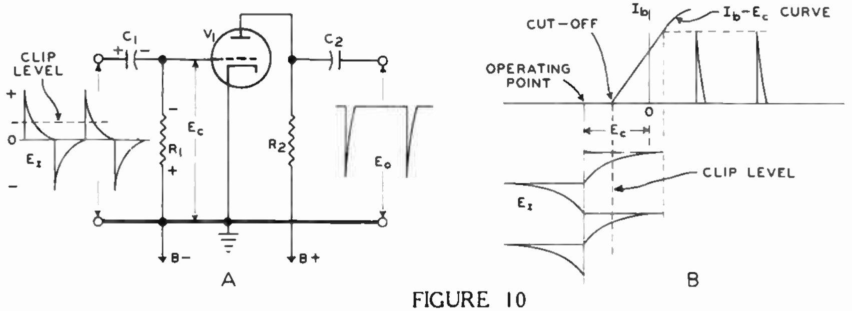

FIGURE 10

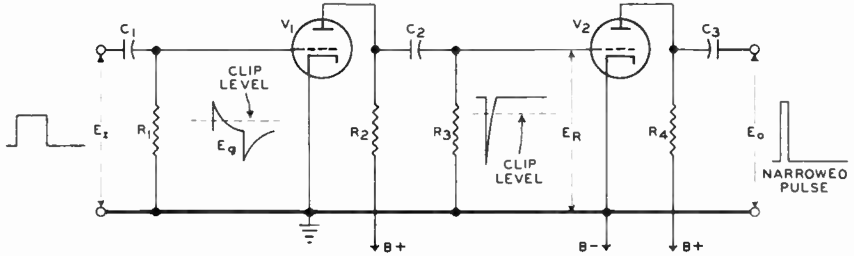

FIGURE 11

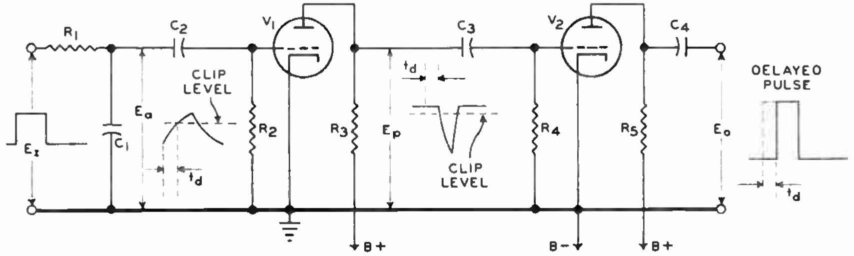

FIGURE 12

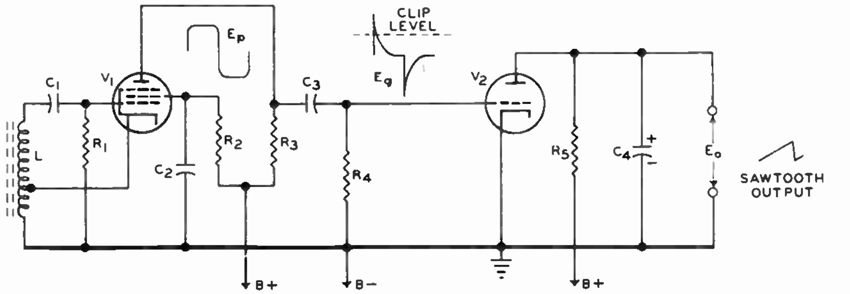

FIGURE 13

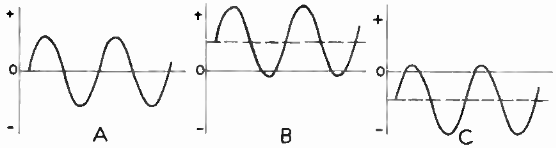

FIGURE 14

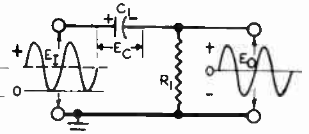

FIGURE 16

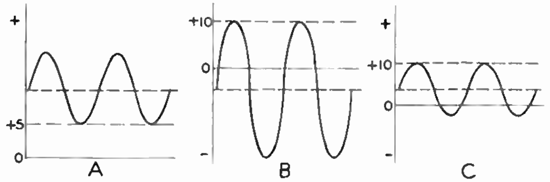

FIGURE 15

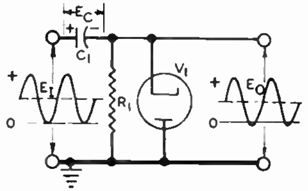

FIGURE 17

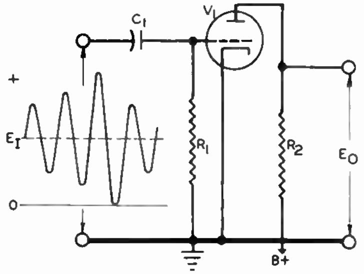

FIGURE 18

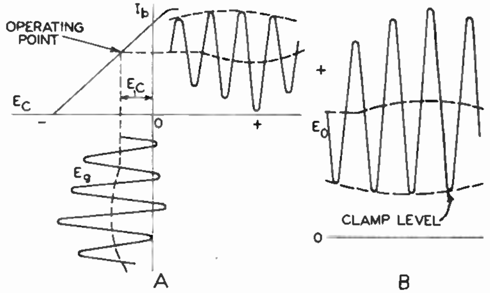

FIGURE 19

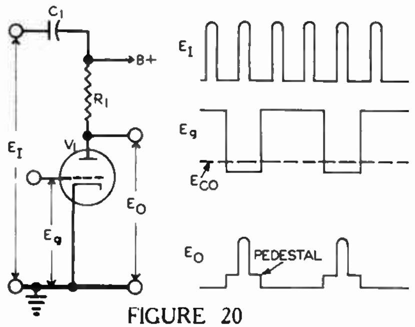

FIGURE 20

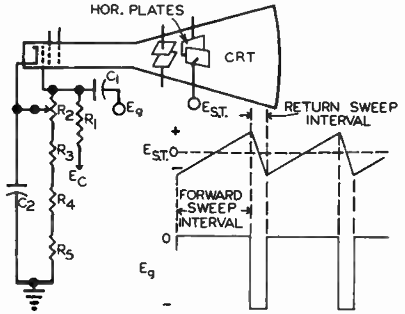

FIGURE 21

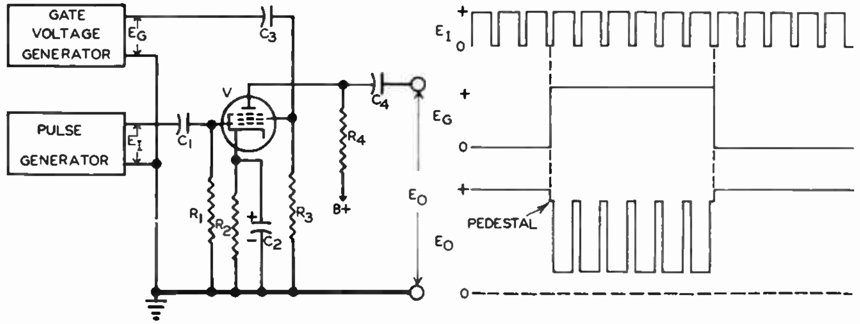

FIGURE 22

Cut along this line and send in for grading

DeVRY Technical Institute

Affiliated with DeFOREST'S TRAINING, INC.

4141 WEST BELMONT AVENUE CHICAGO 41, ILLINOIS

QUESTIONS

Clippers and Gates—Lesson TPC-7A

1

How many advance Lessons have you on hand?..............................

Print or use Rubber Stamp.

Name.. Student No...............................

Street..Zone........................ Grade...............................

City...State........................ Instructor...............................

Write your answers on the "Ans." line below each question. If more space is needed use reverse side of this page.

1. What are the three common types of relaxation oscillators?

Ans...

2. In the circuit of Figure 2, how can the frequency of the sawtooth output be varied?

Ans...

3. What is a limiter or clipper?

Ans...

4. What is the basic difference between the diode limiter action of Figures 4 and 5 compared to the action of Figures 8 and 9?

Ans...

5. In the circuit of Figure 10A, how is the desired clip level established?

Ans...

6. What is done to the input signal E_i, (a) in the circuit of Figure 11, (b) in the circuit of Figure 12?

Ans...

7. What is the purpose of a clamp circuit?

Ans...

8. In a triode clamp circuit like that of Figure 18, what variations maintain the negative peaks of the output at an almost constant level above ground when the input signal varies in amplitude?

Ans...

9. What is meant by a gate circuit?

Ans...

10. What is the purpose of the disabling gate voltage applied to the partial circuit of Figure 21?

Ans...

FROM OUR *President's* NOTEBOOK

JUDGMENT

Experience is acquired only by DOING THINGS.

In Doing Things, we Make Mistakes.

In Making Mistakes we learn to avoid or correct them.

In avoiding them and in correcting them we gain that great and valued asset of the Old and the Experienced—Judgment.

Judgment, it might appear then, is to be gained by the simple process of making a lot of mistakes. But that is not the formula. It is in making mistakes—possibly many of them—that we learn to read the danger signals that our experience has placed there to prevent our making any one of them twice.

The more quickly we learn to recognize and interpret those signals, the sooner do we acquire the ability to choose paths that skirt the wrecks of yesterday's errors and forge ahead toward tomorrow's Achievement.

To have lived long without attaining Judgment is to have lived with but little Purpose.

Yours for success,

E.B. DeVry

PRESIDENT

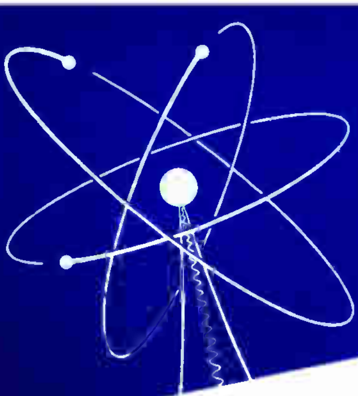

DEFLECTION CIRCUITS

Lesson TPC-8A

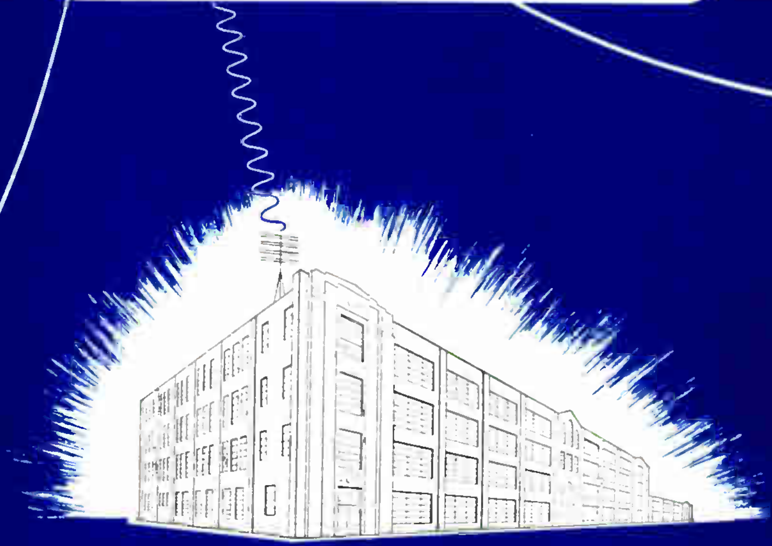

DeVRY Technical Institute
4141 W. Belmont Ave., Chicago 41, Illinois
Affiliated with DeFOREST'S TRAINING, INC.

-8

TPC-8A

DEFLECTION CIRCUITS

ELECTRONICS TELEVISION
DTI
DeVRY Technical Institute

4141 Belmont Ave.
Chicago 41, Illinois

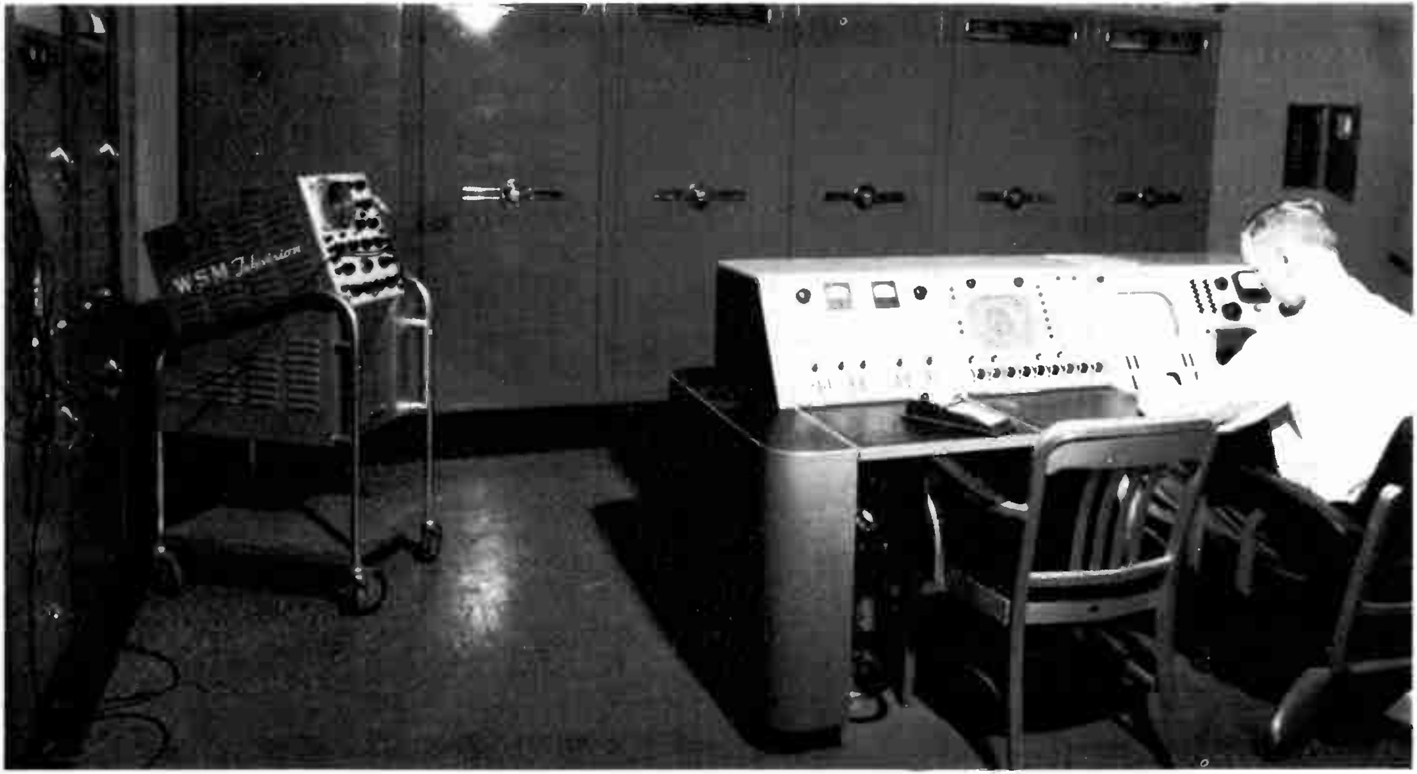

The transmitter room of television broadcast station WSM-TV. The control console monitor, the two network monitors on the extreme left, and the elaborate research oscilloscope mounted on the cart all use deflection circuits.

Courtesy Federal Telecommunication Labs., Inc.

Pulse Circuits

DEFLECTION CIRCUITS

Contents

They do me wrong who say I come no more,
When once I knock and fail to find you in;
For every day I stand outside your door
And bid you wake, and rise to fight to win.
—Judge Walter Malone

DEFLECTION CIRCUITS

Employed in television and electronic instrumentation, the cathode ray tube provides a rapid and efficient means of displaying visually all types of electrical information. However, for the tube to perform these desired functions, the electron beam must be moved or deflected back and forth, and up and down in accordance with the information being displayed.

In many cases, the beam must be deflected continuously in either a horizontal or vertical direction, the desired movement being a relatively slow sweep in one direction and a somewhat faster movement in the opposite direction. The necessary movement of the beam is imparted by applying voltages of suitable wave-form to the cathode ray tube deflection plates or coils, the voltage being generated by special types of oscillators and increased in magnitude by suitable amplifiers.

As explained in a preceding lesson on cathode ray tubes, the deflection plates or coils are named for the direction in which they move the electron beam. The deflection circuits are named in like manner. Hence vertical deflection circuits generate the wave-form necessary for the vertical deflection, and the horizontal circuits generate the horizontal deflection waveforms.

Still reviewing the earlier explanations, the electrostatic type of deflection circuit must produce a linear sawtooth voltage while the electromagnetic type must produce a voltage wave-form that will cause a sawtooth current through the deflection coils. Because of these requirements, there are important differences in the corresponding deflection circuits. In any one application, these circuits are of the same general type but due to the great difference in the horizontal and vertical scanning frequencies makes other variations necessary. Hence, there are distinct HORIZONTAL and VERTICAL DEFLECTION CIRCUITS for ELECTROSTATIC and ELECTROMAGNETIC systems.

ELECTROSTATIC DEFLECTION CIRCUITS

The electrostatic deflection circuit must provide an alternating voltage of sawtooth wave-form and relatively high amplitude. This may be accomplished with a comparatively simple circuit and, for the smaller cathode ray tubes, the deflection circuit components may be small, low in cost, and light in weight. Because the deflecting plates require little power, the deflection circuit components do not have to carry heavy current.

Multivibrator

The schematic diagram of a typical vertical electrostatic deflection circuit is shown in Figure 1. This circuit contains two double triodes, of which V_1 and V_2 function as the sawtooth generator and V_3 and V_4 serve as an amplifier providing push-pull sawtooth voltage to the cathode ray tube deflection plates. At the extreme left of the diagram, synchronizing pulse signals from a sync pulse clipper are applied to the coupling circuit C_1R_1. Appearing across R_1, the signals are applied to the two stage integrating circuit, R_2C_2 and R_3C_3, which is designed to pass only the low frequency vertical sweep sync pulses to the grid of V_1.

Together with V_2, this tube functions as a cathode-coupled multivibrator, V_2 serving as the discharge tube for sawtooth forming capacitor C_5 which charges through R_8 and potentiometer P_1, when V_2 is cut off, and discharges through V_2 and R_4 when the tube conducts. The oscillator frequency is adjusted by means of variable resistor R_6.

It is common practice to vary the sawtooth generator output amplitude by changing the resistance through which the sawtooth forming capacitor charges. However, a secondary and undesirable effect of this arrangement is that a slight change in oscillator frequency occurs also. To avoid this interaction in the circuit of Figure 1 the total series resistance, P_1+R_8, remains constant at all times. Potentiometer P_1 carries the sawtooth charging current of capacitor C_5, and the sawtooth voltage drop which appears across P_1 is coupled through C_6 to the grid of V_3. With this arrangement, potentiometer P_1 may be adjusted to apply the desired amplitude of sawtooth voltage to V_3 without affecting the oscillator frequency. Therefore, the control is known as the vertical **height control.** Varied to change the oscillator frequency, R_6 is the vertical **hold control.**

V_3 and V_4 function as the familiar phase inverting amplifier, with the V_3 output coupled through C_7 to one of the vertical deflection plates. In series between $B+_2$ and $B-$, R_{15} and R_{16} form a voltage divider, with the junction between them connected to the V_3 plate load resistor R_{11}. Since neither section of the voltage divider is bypassed, any variation in the V_3 plate current will result in a change in the voltages developed across R_{11}, R_{15}, and R_{16}. Thus, a part of the V_3 output voltage appears across R_{16} and is coupled through C_8 to the grid of V_4, the output of which is coupled through C_{10} to the other vertical deflection plate.

To improve the wave shape or "linearity" of the sawtooth output of the circuit, positive feedback is obtained by coupling through C_{11} and R_{14} from the V_4 plate to the V_2 plate of the oscillator. In addition, some negative feedback is introduced by supplying the C_5 charging current and the V_2 plate current through R_8 from the tap between R_{15} and R_{16}.

An electrostatic horizontal deflection circuit is shown in Figure 2. Again a cathode-coupled multivibrator, V_1 and V_2, is used for the sawtooth generator. The sync pulse signal is applied to the grid of V_1 through a two stage differentiating circuit, C_1, R_1, C_2, and R_2, which is designed to pass only the horizontal sync. pulses. The oscillator frequency is controlled by variable resistor R_4 which is known as the HORIZONTAL HOLD CONTROL. In the circuit of Figure 2, sawtooth forming capacitor C_4 charges through the series resistors R_7 and R_8, and discharges through V_2 and R_3. The sawtooth voltage amplitude is determined by the setting of R_8, which is known as the horizontal **width control.**

A compact oscilloscope which has two electron guns and corresponding deflection plates to generate two wave-forms on the screen at the same time when comparison is desired.

Courtesy Waterman Products Co., Inc.

The sawtooth voltage is coupled through C_5 to the grid of amplifier tube V_3. The V_3 sawtooth plate current is carried by the center section of auto transformer T_1, thereby inducing a sawtooth voltage across the entire winding. The center section acts as the primary and the entire winding as the secondary. Thus, a voltage step-up is accomplished with the polarity at one end of the winding 180° out of phase with that at the other end.

A push-pull action is obtained by coupling the voltage across the entire winding through capacitors C_8 and C_9 to the horizontal deflection plates. This push-pull application of the sawtooth voltage permits the cathode ray tube plates to have equal voltages with respect to the second anode, and therefore, prevents defocusing of the electron beam due to distortion of the electric field. The linearity of the output is improved by applying positive feedback through R_{11} and C_7 from the lower end of transformer T_1 to the V_3 grid.

Blocking Oscillator

To illustrate the application of a blocking oscillator, a vertical deflection circuit is given in Figure 3. Here, the synchronizing signal is applied to the integrating circuit R_1, C_1, R_2, and C_2 and, appearing across C_2, the vertical sync pulses are coupled through C_3 and applied across R_3 in the oscillator grid circuit. The single tube, V_1, performs the functions of both blocking oscillator and discharge tube. The sawtooth voltage is formed across C_6 which charges through R_6 and R_7 and discharges through V_1 and the plate winding of transformer T_1. The oscillator frequency is controlled by variable resistor R_5, while variable resistor R_7 controls the sawtooth voltage output which is coupled through C_7 to the grid of amplifier V_2.

Tubes V_2 and V_3 form a phase inverting amplifier of the same general type explained for Figure 1. That is, in Figure 3, the V_2 output is coupled through C_{10} to one vertical plate and through C_8 to the voltage divider R_9 and R_{10}, from the junction of which a fraction of this voltage is applied to the grid of V_3. The V_3 output is coupled through C_{11} to the opposite vertical plate. To improve the waveform, positive feedback is coupled from the V_3 plate to the oscillator by means of R_{13} and R_{14}.

The horizontal deflection circuit in Figure 4 contains a single tube that performs the functions of blocking oscillator, discharge tube, and output tube. In connection with transformer T_1, tube V_1 operates as a blocking oscillator with the sync pulse input coupled through capacitor C_1 to the grid circuit. The negative grid bias is developed across C_4, this capacitor charging when V_1 grid current flows and discharging through R_3 and R_4 when V_1 is cut off. By varying the grid bias, variable resistor R_4 controls the oscillator frequency over a narrow range.

When V_1 is cut off, C_5 charges, with electrons flowing from B− to the C_5 negative plate. Other electrons leave the positive plate and flow through the upper winding of T_2 and through the used part of R_5 to B+. As in any RC circuit, C_5 charges rapidly at first, but the charging current gradually dies down. In the upper winding of T_2, this changing current produces a flux which induces a voltage in the lower winding. As C_6 is connected across this lower winding, the induced voltage causes a current which charges C_6 to the polarity indicated.

When V_1 conducts, both C_5 and C_6 discharge in series with the tube and the plate winding of T_1. During discharge, the electron flow is from the negative plate of C_6 to the cathode of V_1, through the tube and the plate winding of T_1, then to the positive plate of C_5. From the negative plate of C_5, electrons flow to the positive plate of C_6.

As shown, the upper plate of C_5 is positive with respect to B− and the sawtooth voltage E_{C_5} is coupled through C_7 to one horizontal deflection plate. The upper plate of C_6 is negative with respect to B –, and the sawtooth voltage E_{C_6} is coupled through C_8 to the other horizontal plate. Thus, push-pull output is obtained by means of the unusual circuit arrangement of Figure 4, in which part of the sawtooth output is formed in the oscillator plate circuit and the other part in the cathode circuit. The output wave-form is improved by means of resistors R_1 and R_2 and capacitors C_2 and C_3 connected across the T_1 windings.

ELECTROMAGNETIC DEFLECTION CIRCUITS

In order to produce linear deflection of the cathode ray beam, the magnetic flux about the coils of the deflection yoke must have sawtooth variation. To produce a flux of this type, it is necessary that the deflection coil current has a sawtooth wave-form. Although the ELECTROSTATIC DEFLECTION SYSTEM REQUIRES A SAWTOOTH VOLTAGE for the deflection plates, the ELECTROMAGNETIC SYSTEM REQUIRES A SAWTOOTH CURRENT for the deflection coils.

Production of Sawtooth Current

If the magnetic deflection coil circuit consisted of resistance only, a sawtooth current could be produced in it simply by applying a sawtooth voltage. This is illustrated in Figure 5A, where, applied to resistor R, sawtooth voltage e_a results in current I_R having sawtooth wave-form. However, due to the inductance of the deflection coils, an applied sawtooth voltage does not cause a sawtooth current. If the magnetic deflection coil circuit consisted of inductance only, with no resistance, a sawtooth current I_L could be produced by applying a rectangular voltage as shown in Figure 5B.

However, in a practical magnetic deflection circuit, the coil inductance L and resistance R_L are effectively in series with the amplifier tube plate resistance R_p as shown in the simplified circuit of Figure 5C. Therefore, as the circuit contains both resistance and inductance, neither a sawtooth nor a square wave of applied voltage will produce sawtooth current. To provide sawtooth current in a circuit of this type, the impressed voltage must have a **trapezoidal** wave-form, that is it must have both square and sawtooth components as shown by voltage e_a of Figure 5C.

One method of producing a trapezoid voltage is illustrated in Figure 6A, where tube V_1 represents the discharge tube of the deflection voltage generator, and R_1 the high resistance through which sawtooth-forming capacitor C_1 charges. A second resistor, R_2, is connected in series with capacitor C_1 so that both the charge and discharge currents of C_1 are carried by it. Since the resistance is relatively small, it has little effect on the charging and discharging rates of the capacitor. When V_1 is cut off and C_1 is charging, electrons flow from ground through R_2 to the negative plate of C_1, and from the positive plate through R_1 to B+. When V_1 conducts, electrons leave the negative plate of C_1, flow through R_2 to ground, and from ground through V_1 to the positive plate of C_1. In Figure 6B the sawtooth voltage that is developed across C_1 is indicated by e_C.

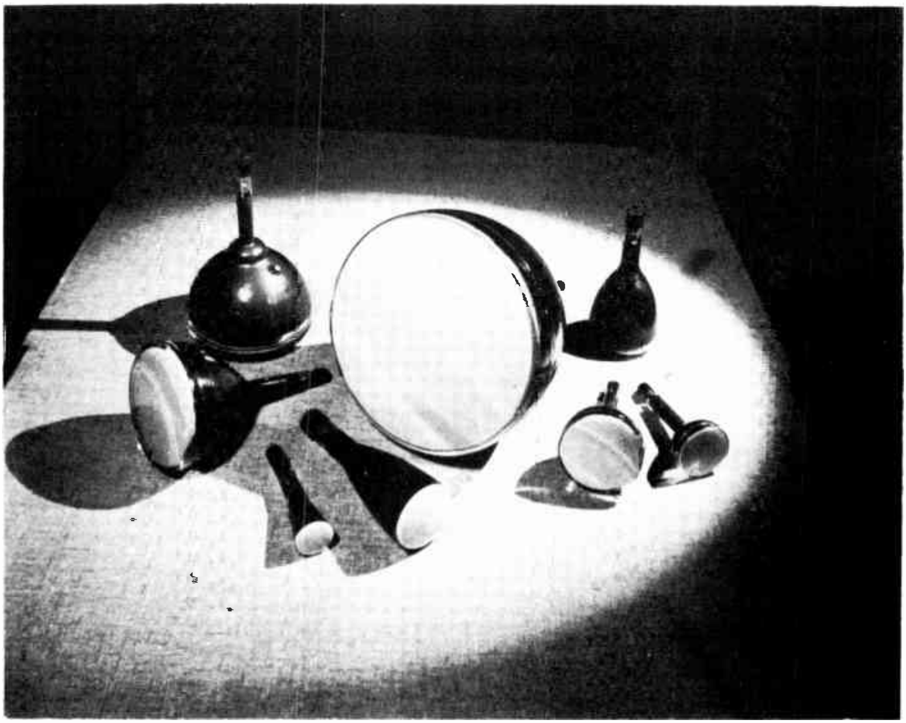

All cathode ray tubes require either electrostatic, electromagnetic, or a combination of the two deflection systems to trace patterns on the screens.

Courtesy Allen B. DuMont Labs., Inc.

Having the wave-form shown as e_{R_2} in Figure 6B, an alternating voltage is developed across R_2 by the charge and discharge currents of C_1. Referring to Figure 6A, when C_1 is charging, the direction of electron flow is such that the upper end of R_2 is positive with respect to ground, and when C_1 is discharging, the electron flow reverses to make the upper end of R_2 negative with respect to ground. At the beginning of the cycle, the charging current is maximum and e_{R_2} has a maximum positive value as shown in Figure 6B. As C_1 charges, the current decreases and e_{R_2} falls toward zero. At the beginning of the discharge interval, the discharge current has a high value and a high negative voltage drop is produced across R_2, but as the discharge current dies down, the negative value of e_{R_2} is reduced. The instant V_1 stops conducting, C_1 again begins to charge and the polarity of e_{R_2} becomes maximum positive immediately, thus completing the cycle.

As indicated in Figure 6A, the output voltage e_o is developed across C_1 and R_2 in series, and therefore, at every instant, will be equal to the sum of e_C and e_{R_2}. This addition is shown graphically in Figure 6B where the addition of the e_C and e_{R_2} provides the trapezoidal wave-form e_o. When used for this purpose, R_2 of Figure 6A is called a PEAKING RESISTOR.

An example of a vertical electromagnetic deflection circuit is given in Figure 7. Here, integrating circuit R_2, C_1, R_3, C_2, R_4, and C_4 is in the grid circuit. V_1, T_1, C_5, R_6, and R_7 form a blocking oscillator. The grid of tube V_1 is connected directly to the grid of V_2 which serves as the discharge tube for sawtooth forming capacitor C_6. The peaking resistor R_8 and the variable resistor R_{10} are in series with C_6. Thus, during the C_6 charging period, electrons flow from ground through the used part of R_{10}, and through R_8 to one plate of C_6. Leaving the other plate, electrons flow to height control potentiometer P_1 and through this unit to B+.

During the discharge period, electrons flow from C_6 through R_8 and R_{10} to ground and back through V_2 to the other plate of C_6. This results in a trapezoid voltage being formed across C_6 and R_8 in series, and this voltage is coupled through C_7 to the grids of V_3 and V_4.

As shown, V_3 and V_4 are operated in parallel, with their respective elements tied together. Therefore, R_9 forms the grid resistor for both grids and R_{10} the common resistor for both cathode circuits. In like manner, the plate currents of both tubes pass through the primary of transformer T_2, by means of which the output is coupled to the vertical coils of the deflection yoke. Resistors R_{12} and R_{13}, each connected in parallel with one of the deflection coils, reduce the magnitude of the voltage that is induced across the coils during the rapid changes of current, while capacitor C_{10} absorbs the energy from the T_2 secondary at the same time, thus preventing any tendency toward oscillation.

To decrease distortion of the amplifier plate current wave-form, the charge and discharge currents of C_6 are passed through the used portion of variable resistor R_{10}. As shown in Figure 7, the upper plate of C_6 becomes more and more positive as this capacitor charges, and this positive increase is applied to the grids of V_3 and V_4. The positive swinging grids cause the plate currents of these tubes to increase and, carried by R_{10}, these currents tend to cause an increase of voltage drop across this resistor. Although C_8 is employed to maintain the bias, E_{R10}, constant, its filtering action is not completely effective because the voltage variations occur at such a low rate.

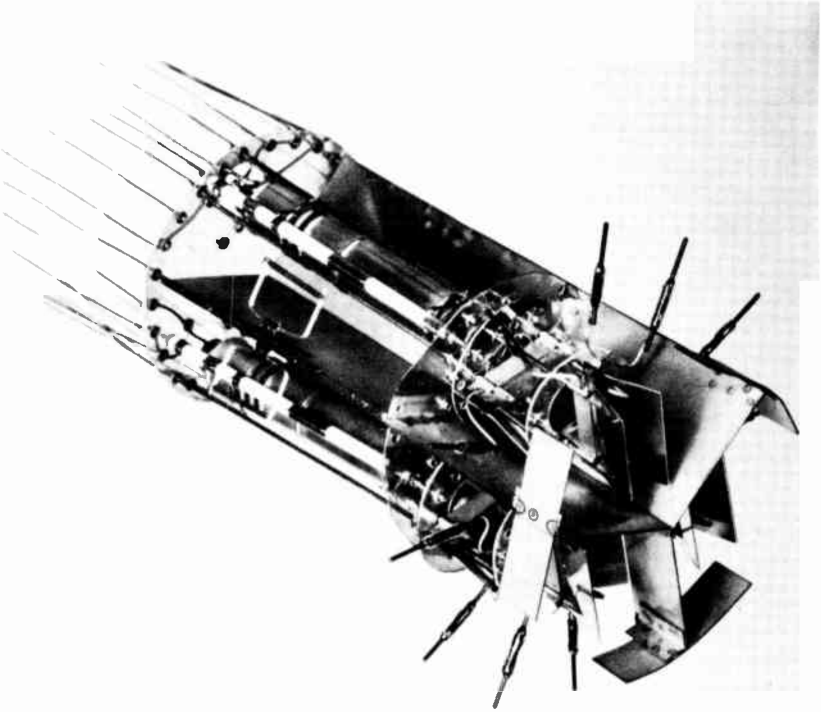

These three guns and six pairs of deflection plates are included in the neck of a special purpose cathode ray tube. Hence, three individual curves can be traced on the screen at the same time.
Courtesy Electronic Tube Corporation

When charging, the charging current of C_6 is decreasing, while at the same time, the plate currents of V_3 and V_4 are increasing. As all of these currents pass in the same direction through R_{10}, the decreasing capacitor charging current counteracts the effects of the increasing plate currents, thus tending to maintain $E_{R_{10}}$ constant.

During the discharge of C_6, electrons leave this capacitor, flow through R_8 and into C_8. Also, leaving the lower plate of C_8, electrons flow to ground, then through V_2 to the upper plate of C_6. This would seem to discharge C_8 as well as C_6, and, to some extent, it does. However, the capacitance of C_8 is many times as great as that of C_6, and a discharge current of sufficient amplitude to discharge C_6 results in only a very slight change in the potential across C_8. This is true because the voltage across a capacitor is directly proportional to the quantity of electrons stored by it, but inversely proportional to its capacitance.

The slider on R_{10} permits varying the bias voltage so that the amplifier tubes operate at the point on their characteristic curve which results in the most linear output wave-form. For this reason, R_{10} is called a **linearity control.**

A horizontal electromagnetic deflection circuit is shown in Figure 8. Here, V_1, T_1, C_3, R_1, R_3, and R_4, constitute a blocking oscillator which controls the conduction and cutoff periods of discharge tube V_2. The frequency is controlled by variable resistor R_4, and the trapezoid voltage is formed across capacitor C_6 and variable peaking resistor R_6.

Between the V_2 plate and the C_6R_6 combination, coupling capacitor C_5 has a capacitance many times that of C_6 and has very little effect on the charging and discharging of C_6. In this way, a trapezoid voltage is developed across the C_6R_6 combination, even though it is not connected directly to the V_2 plate.

The linearity of the output waveform is determined by the setting of R_6, upon which depends the magnitude of the negative "spike" of the trapezoid wave. As shown, transformer T_2 couples the output from amplifier tube V_3 to the horizontal coils of the deflection yoke.

Damping Tube

To provide for the rapid return or **flyback** of the electron beam from the end of one sweep to the start of the next, it is necessary that the current decline very rapidly in the deflection coil and in the coupling transformer primary and secondary. Induced in these coils by the rapid change of current during the return sweep period, high voltage pulses tend to throw this tuned circuit into momentary oscillation at its resonant frequency, which is generally between 75 and 100 kilocycles.

Called a **damping tube,** V_4 is employed to prevent or damp undesired oscillations by drawing a heavy current during the portions of the oscillation which makes the damping tube plate positive with respect to its cathode, so that the energy of these oscillations is absorbed by the V_4 circuit. Thus, the induced voltage wave-form is damped very rapidly so far as oscillations are concerned and the coil current has the desired linear sawtooth shape.

Deflection coil circuit oscillations which are detrimental to the image occur at the beginning of the scanning interval, immediately after the end of the flyback period. As explained, these oscillations are due to the high voltages induced by the rapid change in magnetic flux at the instant the circuit current reverses direction.

At this instant, the upper end of the T_2 secondary winding becomes highly positive and causes heavy conduction of damping tube V_4. The V_4 conduction is not harmful to the scanning motion of the cathode ray tube beam because very little deflection coil current is required at the beginning of the scanning period. The heavier the conduction of the damping tube, the greater its effect and the shorter the duration of the oscillation.

Even after oscillations have ceased, the damper continues to draw a small current for the remainder of the trace. During conduction, the damping tube forms a resistance path in series with the inductance of the deflection coil, and this circuit may be represented by the simplified arrangement shown in Figure 5C.

In a series LR circuit, the rate of current change depends upon the inductance and resistance. The time T, in seconds, required for the current to decay to 36.8% of its initial value is given by the formula $T = L/R$, where L represents the inductance in henrys and R the resistance in ohms. This value, L/R is called the time constant, and the formula shows that the time required for a given amount of current change in an LR circuit is inversely proportional to the circuit resistance.

The damping tube may be considered as a low resistance during conduction and infinite resistance during cutoff. Although it is permissible for the damping diode to conduct during the longer time interval for the trace, in order that a rapid decay of current may occur during the flyback interval, the damping tube must be cut off to provide a high resistance and a small circuit time constant. This requirement is satisfied when tube V_4 is so connected that the induced secondary voltage in T_2 makes the V_4 plate negative during the flyback time.

Power Feedback

Diode V_4 has the primary function of damping the deflection coil circuit to prevent oscillation, however, in the circuit arrangement of Figure 8, the energy thus acquired by the V_4 circuit is stored, and subsequently used, instead of being dissipated in the form of heat. This arrangement is known as a POWER FEEDBACK or VOLTAGE BOOSTER circuit and the magnetic energy in the fields of the T_2 secondary and the deflection coils is stored in capacitor C_{12}.

As explained for the damping tube, the sudden reversal of current at the end of the retrace or flyback period induces a high voltage surge in the secondary of transformer T_2. This surge is applied to the plates of tube V_4 in series with the $B+_2$ supply voltage connected to the tap on the secondary winding. This increased voltage causes a current surge through V_4 to charge capacitor C_{12} to the indicated polarity. The electron path is from the positive plate of C_{12} through V_4 from cathode to plate, through the secondary winding to the tap, through the plate supply from $B+_2$ to the grounded $B-$ and back to the negative plate of C_{12}.

Tracing the circuit from the plate of V_3, there is a path through the T_2 primary and coil L_1 to the positive plate of C_{12}, and a second path from the V_3 screen grid through R_{10} and R_{11} to the same plate of C_{12}. Furthermore, since the V_3 cathode connects through R_9 to ground and the negative plate of C_{12} connects to ground, this capacitor serves as a d-c voltage source for V_3. Therefore, by rectifying the voltage produced across the T_2 secondary, tube V_4 and capacitor C_{12} utilize energy that otherwise would be lost.

For the purpose of attaining the satisfactory sawtooth current wave-form, the circuit of Figure 8 contains two linearity controls, coil L_1 and potentiometer P_1. Varying the adjustable iron core of L_1 results in changing the inductive reactance in the V_3 plate circuit, while, from the slider on P_1, feedback energy is coupled through R_7 and C_7 to the V_3 grid, and through C_4 to the plate circuit of V_2.

Another vertical electromagnetic deflection circuit is shown in Figure 9. Including tubes V_1 and V_2, the deflection voltage generator is of the conventional multivibrator type. That is, the cathodes are grounded, the V_2 plate is coupled through capacitor C_3 to the V_1 grid, and the V_1 plate is coupled through capacitor C_4 to the grid of V_2. The sync input is impressed across R_1, while the oscillator frequency is controlled by potentiometer P_1 in the V_2 grid circuit. The deflection voltage is formed across parallel capacitors C_7 and C_8 which are charged in series with resistor R_5, height control potentiometer P_3, resistor R_4 and linearity control potentiometer P_2.

Similar to the arrangement explained for Figure 7, in Figure 9 capacitors C_7 and C_8 discharge through tube V_2, resistor R_4, and potentiometer P_2 which provides a linearity control. The V_3 output is coupled by transformer T_1 to the vertical deflection coils. Since the very short flyback time required for most horizontal deflection circuits is not needed, a damping tube isn't necessary, and R_6 and C_{12} will prevent the oscillations in the transformer circuits.

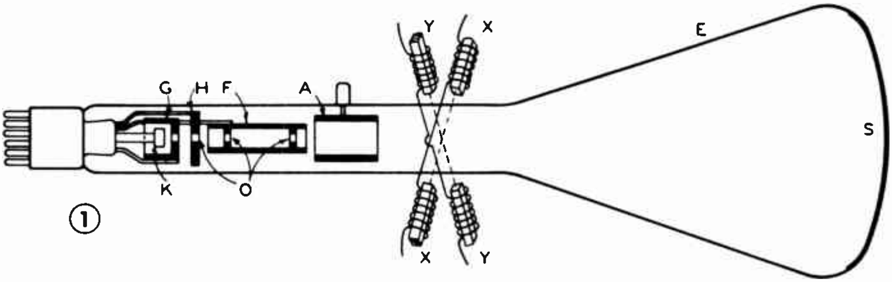

①

A = HIGH-VOLTAGE ELECTRODE (ANODE No. 2)
B = INNER SET OF DEFLECTING ELECTRODES
C = OUTER SET OF DEFLECTING ELECTRODES
E = GLASS ENVELOPE
F = FOCUSING ELECTRODE (ANODE No. 1)
G = CONTROL ELECTRODE (GRID No. 1)
H = ACCELERATING ELECTRODE (GRID No. 2)
K = CATHODE
O = APERTURES
S = FLUORESCENT SCREEN
XX = PAIR OF COILS FOR PRODUCING MAGNETIC FIELD
YY = PAIR OF COILS FOR PRODUCING MAGNETIC FIELD AT RIGHT ANGLES TO THAT PRODUCED BY THE PAIR OF COILS XX

NOTE: ELECTRODES K, G, H, F, AND A CONSTITUTE AN "ELECTRON GUN".

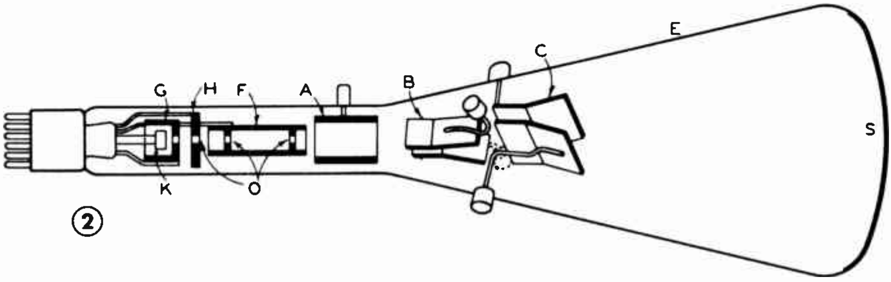

②

SCHEMATIC ARRANGEMENT OF ELECTRODES IN A CATHODE-RAY TUBE:

1. Electromagnetic-Deflection, Electrostatic-Focus Type
2. Electrostatic-Deflection, Electrostatic-Focus Type

Courtesy Radio Corporation of America

Figure 10 shows a horizontal deflection circuit in which tubes V_1 and V_2 form a cathode coupled multivibrator, the circuit of which is slightly modified from those which have been explained previously. As usual, energy is fed back through C_2 from the V_2 plate to the grid of V_1. However, the V_1 grid circuit is completed through an automatic frequency control circuit (not shown), the operation of which is explained in a later lesson.

Another variation is that the oscillator frequency determining components are not in the V_2 grid circuit and, as shown, this grid is connected directly to ground. Rather, the frequency is determined by the setting of L_1 which, together with C_1, forms a parallel resonant circuit in the oscillator cathode circuit. As in the case of any multivibrator, tubes V_1 and V_2 alternately conduct and are cut off, with one being conductive while the other is cut off, and vice versa.

The deflection voltage is formed across series-connected C_3 and R_4, with the capacitor charging while V_1 is cut off and discharging when this tube conducts. The C_4 capacitance is small in comparison to that of C_3 so that its effect on the trapezoid voltage is negligible. The resulting trapezoid voltage is coupled through C_5 and R_5 to the grid of amplifier tube V_3, the output of which is coupled through transformer T_1 to the horizontal deflection coils shown at the extreme right.

In series with the deflection coils, variable inductance L_3 controls the amplitude of the sawtooth current and thus functions as the width control. Required by the frequency control circuit for its proper operation, a portion of the deflection voltage is fed back through the filter composed of R_{10}, R_{11}, and C_7.

As shown, a double triode tube, V_4, is employed to damp the oscillations in the deflection coil circuit. Similar to the damping tube of Figure 8, V_4 is connected so that it is conductive during the cathode ray tube electron beam forward scanning intervals and cut off during the flyback periods.

During the forward scanning interval, the upper end of the secondary on transformer T_1 is highly positive and C_8 charges to the polarity indicated, with electrons leaving the upper positive plate and flowing through the transformer secondary to the tap near its lower end, and then down through L_3 to ground. From ground the electron path is to the lower, positive plate of C_9. Other electrons leave the upper, negative plate of this capacitor and flow through potentiometer P_1 and resistor R_{12} to the C_8 negative plate.

The direction of electron flow in C_9 would seem to discharge it and charge it to the opposite polarity, but because the capacitance of C_8 is much smaller than that of C_9

and because most of the C_8 charge is supplied by cathode-to-grid electron flow in V_4, the effect on the C_9 charge is negligible.

In parallel with C_9, series connected resistors R_{14} and R_{16} also carry a small part of the C_8 charging current. Carried by R_{14}, P_1, and R_{12}, this current develops a voltage drop that makes the upper end of R_{12} positive with respect to the $R_{14}R_{16}$ junction. Applied through R_{13} and R_{15} respectively, this voltage makes the V_4 grids positive to their cathodes and results in the heavy tube conduction that provides good damping action in the deflection coil circuit.

With the grids positive, there is cathode-to-grid electron flow in V_4. Passing through R_{13} and R_{15} respectively, this current causes the grid ends of these resistors to be negative with respect to the upper end of R_{12} and thus limits the positive swings of the grids to prevent excessive plate current, with possible damage to the tube. Due to the relatively low-resistance of R_{16} and R_{13} and R_{15} in parallel, the cathode-to-grid electron flow charges C_8 very quickly and reduces the charging current to zero. The C_9 discharge current through P_1, R_{12}, and C_8 is reduced also to zero. Now, C_9 discharges through R_{14} and the parallel combination of R_{16} and C_{10}, but because R_{14} has a large resistance, C_9 discharges slowly and the negative voltage developed across R_{14} is sufficient to maintain V_4 cut off for the remainder of the forward sweep interval.

At the end of the sweep, the voltage at the upper end of the transformer secondary suddenly reverses polarity and becomes highly negative. This high negative voltage causes C_8 to discharge rapidly, with electrons leaving its lower, negative plate and flowing through R_{12} and P_1 to the C_9 negative plate. Other electrons leave the positive plate of C_9 and flow to ground and then through L_3 and the transformer secondary to the C_8 positive plate. Flowing in this direction, the electrons replace the C_9 charge that was lost during the forward sweep interval. As the capacitance of C_9 is much greater than that of C_8, after an initial series of cycles, the C_9 charge remains practically constant while

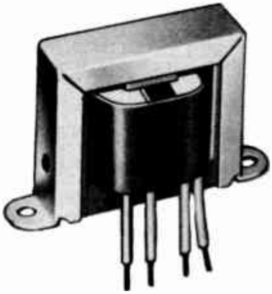

A transformer of the type used as vertical output transformers.

Courtesy Standard Transformer Corp.

the C_8 charge varies appreciably during each cycle.

Thus, V_4 conducts only during the short period of oscillation at the beginning of the scanning and is cut off during the remainder of the interval. The conduction period of V_4, and thus the shape of the sawtooth current at the start of the sweep, may be varied through changing the resistance in the C_8 charge path by adjusting the slider on potentiometer P_1, which thereby serves as a linearity control.

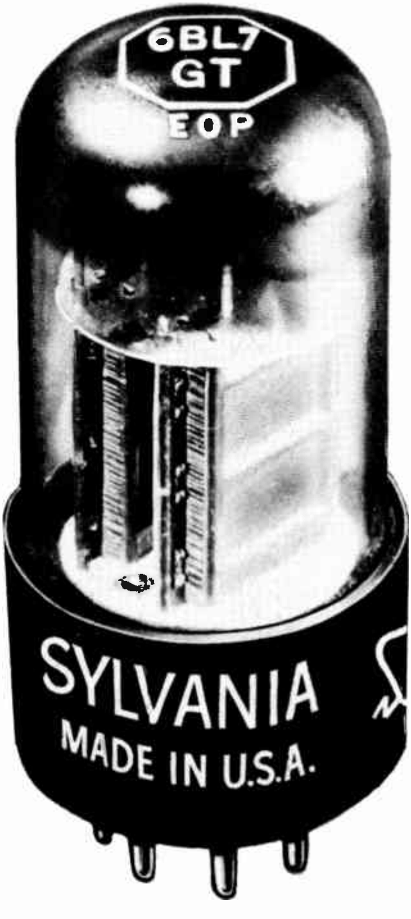

The 6BL7G is a duo-triode. This tube is used in the oscillator and power output stages of the vertical electromagnetic deflection circuits such as TV receivers.

Courtesy Sylvania Electric Products, Inc.

The vertical electromagnetic deflection circuit of Figure 11 illustrates a method of frequency stabilization that may be employed with any blocking oscillator. Here, the sync input is applied through the three stage integrating circuit, R_2, C_1, R_3, C_2, R_4, and C_3 to the grid circuit of blocking oscillator V_1 which also serves as the discharge tube for the sawtooth forming capacitor C_5.

The oscillator frequency is determined by the setting of the hold control, R_6, while in series with the C_5 charging circuit, R_{17} functions as the height control. Also in series with C_5 are the peaking resistor R_{10} and resistors R_{12} and R_{13} of the V_2 cathode circuit. By permitting adjustment of the operating point of the amplifier tube, R_{13} serves as the linearity control. The V_2 output is coupled through transformer T_2 to the vertical deflection coils, the d-c circuit of which includes VERTICAL POSITION CONTROL P_1.

Frequency Stabilization

To prevent oscillator frequency variations, a special circuit arrangement is employed in the deflection circuit of Figure 11. The stabilizing action is achieved by virtue of the fact that the V_1 hold control R_6 is connected to the junction between voltage divider resistors R_7 and R_8 instead of to ground in the usual manner. The grid-leak bias voltage is developed across R_5 and R_6, the grid end of R_5 being negative with respect to the voltage divider end of R_6. The complete divider includes R_7, R_8, R_{17}, and R_{18} and is connected from $B-$ to point "X," which is positive with respect to $B-$. Carried by R_7, the divider current causes the voltage drop E_{R7} to have the polarity indicated. Thus, in the V_1 grid-cathode circuit, E_{R7} is in series opposition to the grid-leak bias, E_{R5R6}, therefore the net negative grid bias is equal to $E_{R5R6} - E_{R7}$.

To illustrate the stabilizing action, suppose the supply voltage at point "X" increases. This will raise the V_1 plate voltage, causing the pulses of plate current to have greater amplitude. Supplied through T_1 to the grid circuit, the feedback energy will be increased, causing an increase in the developed grid-leak bias voltage.

A higher negative bias, E_{R5R6}, tends to decrease the frequency of oscillation. However, with point "X" more positive, the divider current will increase causing E_{R7} to increase also, thus counteracting the increase of E_{R5R6} so that the net negative bias, and the frequency, will remain constant. In a similar manner, any decrease in the supply potential at point "X" results in a decrease in both E_{R5R6} and E_{R7}, and again the net negative bias remains unchanged.

For improved performance, the horizontal deflection circuit shown in Figure 12 employs an electron-coupled sine wave oscillator and automatic frequency control, the circuit of which is not shown. Although the oscillator generates a sine wave voltage across the resonant circuits of transformer T_1, the tube operating conditions are such that the V_1 output is nearly square wave. Applied to the differentiating circuit C_3R_5, the square wave voltage is changed into a series of alternate narrow positive and negative pulses.

A horizontal deflection transformer of the air core type found in TV receivers.

Courtesy Merit Coil and Transformer Corp.

These pulses are coupled through capacitor C_4 to the V_2 grid, where the positive peaks cause cathode-to-grid electron flow which produces a high value of grid-leak bias across resistor R_6. This high negative bias maintains V_2 at cutoff except during the very short positive peaks of the input wave. Therefore, sawtooth forming capacitor C_5 charges during the long period when V_2 is cut off and discharges in the short intervals when the tube conducts.

The 25W4GT, a half-wave, high-vacuum rectifier, may be used as a damping diode in horizontal sweep circuits.

Courtesy General Electric Co.

Peaking resistors R_8 and R_9 result in a trapezoidal output, the amplitude of which can be controlled by adjustment of R_9. As explained above, distortion of the wave-form is reduced due to the fact that the C_5 charge and discharge currents pass through the V_3 cathode resistor R_{11}. The amplifier output is coupled through transformer T_2 to the horizontal coils, and oscillations are damped by the double diode, V_4.

As in the circuit of Figure 8, here the damping tube V_4 is connected so that the alternating voltage across the T_2 secondary is converted to a stored charge on capacitors C_9 and C_{10}. The charge on C_9 is employed to supply the plate circuit of amplifier tube V_3. Also, point "X" in this circuit is connected to point "X" in the circuit of Figure 11. Thus, the d-c charge on C_9 also provides the high voltage supplied to plate circuit of the vertical deflection oscillator.

Deflection Voltage Failure Protection

In order to prevent damage to the cathode ray tube screen in the event of the failure of any tube or part, some deflection circuits employ what is known as a "deflection failure circuit." Such an arrangement is shown in the circuit of Figure 13. The deflection voltage generator portion of this circuit is the same as that employed in the circuit of Figure 12, and consists of the electron coupled oscillator V_1, differentiating circuit C_1R_2, discharge tube V_2 and series connected sawtooth forming capacitors C_3 and C_4.

The deflection voltage generator output is coupled through C_5, R_8, and R_7 to the control grids of parallel connected pentode amplifier tubes V_3 and V_4. These tubes are operated in parallel to provide the high amplitude sawtooth current required for the horizontal deflection coils. As indicated, the secondary of transformer T_1 is connected to the horizontal coils of the deflection yoke. Also, connected across this winding is the circuit of the double triode damping tube V_5, which is employed in the same type of circuit as shown in Figure 10.

In Figure 13, variable resistor R_{14} functions as the linearity control, while potentiometer P_1 is the horizontal positioning control. Connected between ground and a tap near the lower end of the transformer secondary, potentiometer P_2 has a small portion of the output voltage wave-form appearing across it.

During the flyback period, the output is a short negative voltage pulse. Taken from the P_2 slider, a small portion of the negative pulse is fed into the sawtooth forming circuit of C_3 and C_4, where it is added in series with C_3 sawtooth to form the required trapezoidal voltage. The amplitude of this voltage, and the resulting sawtooth current wave-forms can be controlled by means of the slider on P_2.

In Figure 13 tubes V_6, V_7, and V_8 and their associated circuits protect the screen of the cathode ray tube in the event of deflection voltage failure. Briefly, this circuit is arranged to operate so that so long as both horizontal and vertical deflection voltages are present, tube V_7 is conductive and the contacts of relay K are maintained in the closed position, thus permitting the normal bias to be applied to the cathode ray tube. If either the horizontal or vertical deflection circuit becomes inoperative, V_7 cuts off, the contacts of relay K open, and a high negative bias is applied to the cathode ray tube grid so that the intensity of the spot is greatly reduced.

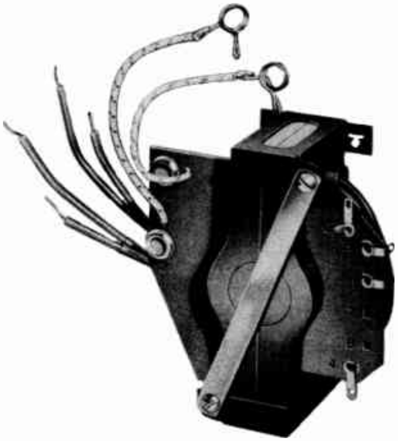

A horizontal output transformer of the type used in television electromagnetic deflection systems.
Courtesy Standard Transformer Corp.

The double triode tube V_7V_8 is operated so that normally the V_7 section is conductive while the V_8 section is cut off. The winding of relay K is in series in the V_7 plate circuit so that the plate current energizes the relay, thus keeping its contacts closed. Potentiometer P_3 is the brightness control and from the slider on this unit, a positive voltage is applied through the contacts of K to the cathode ray tube cathode. Note that, when closed, the relay contacts short out resistor R_{22}.

If for any reason V_7 is cut off, the relay is de-energized and its contacts open. This places R_{22} in series between the slider on P_3 and the cathode ray tube cathode. R_{22} has a high resistance, therefore the tube electron beam current develops a high voltage drop across R_{22} such that the cathode end is positive with respect to the end which connects to P_3. This positive cathode voltage is equivalent to a high negative grid bias, and therefore, the intensity of the spot is reduced to a very low level.

A view of a deflection yoke with the cover removed. Due to the high voltage supplied to the coils, the vertical and horizontal coils must be well insulated from each other by the plastic material shown between them.

Courtesy Merit Coil and Transformer Corp.

As shown, tubes V_7 and V_8 employ a common cathode resistor R_{20}. The V_7 grid is returned through resistor R_{19} to B− which, with respect to ground, has a sufficiently high negative value to cut off this tube. However, operating as an inverted diode, V_6 employs the output of the horizontal deflection circuit to develop a positive voltage across R_{19}. The voltage divider R_{17} and R_{18}, is connected to the tap near the lower end of the secondary of transformer T_1. Thus, a part of the deflection circuit output is coupled through C_{11} to the V_6 cathode.

The negative peaks of the output wave causes conduction of V_6, thereby charging C_{11} to the polarity indicated. During the intervals between the peaks of the applied voltage, C_{11} discharges through R_{19} to produce a voltage drop of the indicated polarity. The electron flow here is from the C_{11} negative plate through R_{18} to ground, and from ground through P_1, R_{23}, and R_{19} to the positive plate of C_{11}. As the voltage drop E_{R19} is in opposition to that applied from B −, the total bias between the V_7 grid and cathode is reduced so that sufficient plate current is permitted to energize relay K.

However, should the horizontal sweep circuits fail for any reason, no signal is applied to V_6, and voltage E_{R19} drops to zero. With no positive bias voltage across R_{19}, the V_7 grid is reduced to the B − potential, thus cutting off this tube. As mentioned, this opens the contacts of K, and R_{22} is inserted in the cathode ray tube cathode circuit.

Coupled to the grid of V_8 through capacitor C_{12}, the vertical deflection output voltage produces sufficient voltage drop across R_{21} to bias the tube to cutoff. Should the vertical deflection circuit fail, there will be no drop across R_{21} and the V_8 grid potential will be the same as that of the cathode. The resulting heavy conduction in this tube will produce a very high voltage drop across cathode resistor R_{20}. Since this resistor is in the grid-cathode circuit of V_7 also, the high voltage across R_{20}, acting in series with $E_{R_{19}}$ and the B − potential, is enough to cut off V_7. Thus, failure of either deflection circuit results in V_7 being cut off, and as explained, a high bias is applied to the cathode ray tube grid so that the beam intensity is reduced to a level which does not damage the screen.

* * *

IMPORTANT DEFINITIONS

DAMPING TUBE—An electron tube connected across the deflection coils of a cathode ray tube to prevent or damp the oscillations produced by the rapid decay of the current.

FLYBACK—The rapid return of the electron beam from the end of one sweep to the start of the next.

HEIGHT CONTROL—In a cathode ray tube deflection circuit, the control by which the vertical amplitude of the screen pattern is varied.

HOLD CONTROL—In a cathode ray tube deflection circuit, the control by which the oscillator frequency may be varied.

LINEARITY CONTROL—[*lin* ee AIR i ti k'n TROHL]—In a deflection circuit, the control used for improving the wave-form so as to produce a linear sawtooth output.

TRAPEZOIDAL—[*trap* e ZOY d'l]—A wave-form containing both square and sawtooth components.

WIDTH CONTROL—The control by which the horizontal length of the cathode ray tube pattern is changed.

STUDENT NOTES

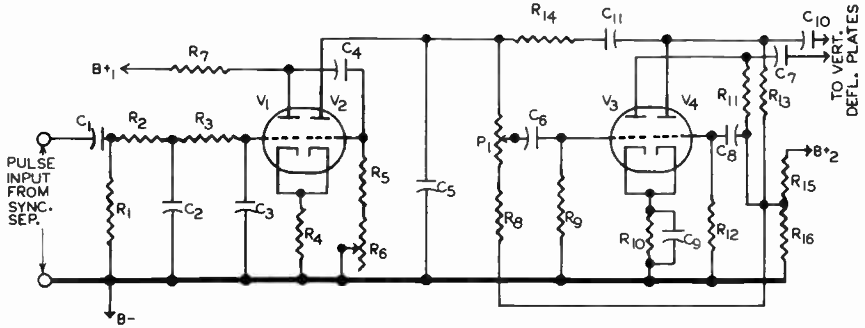

FIGURE 1

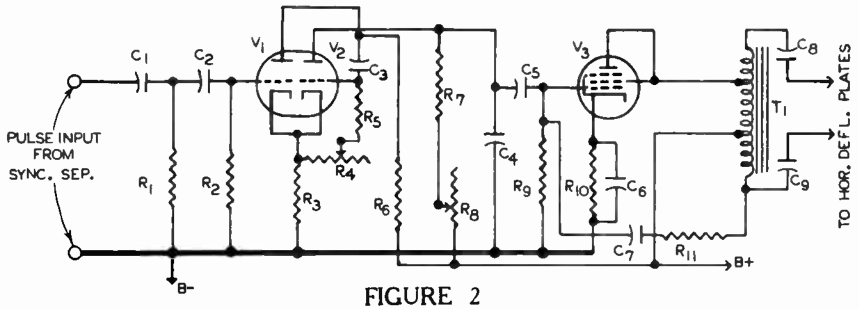

FIGURE 2

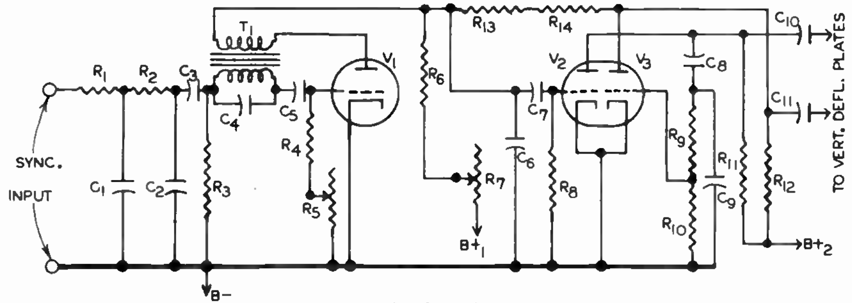

FIGURE 3

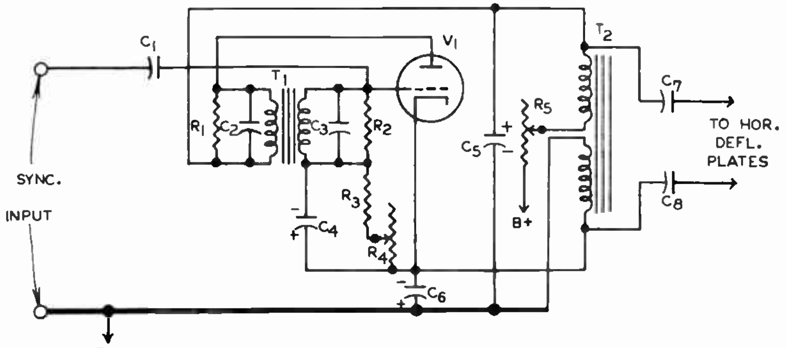

FIGURE 4

TPC-8

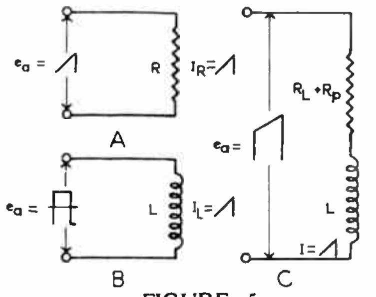

FIGURE 5

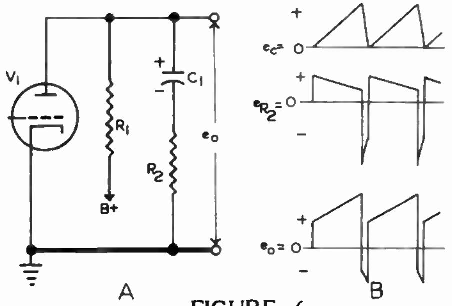

FIGURE 6

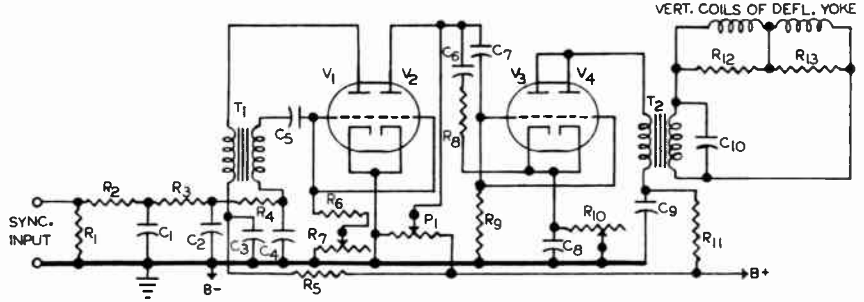

FIGURE 7

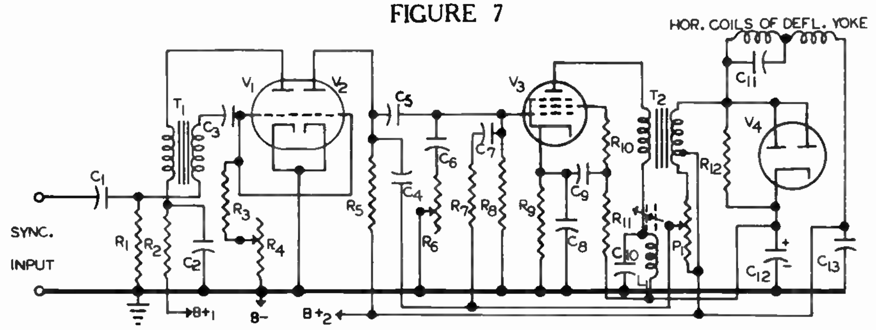

FIGURE 8

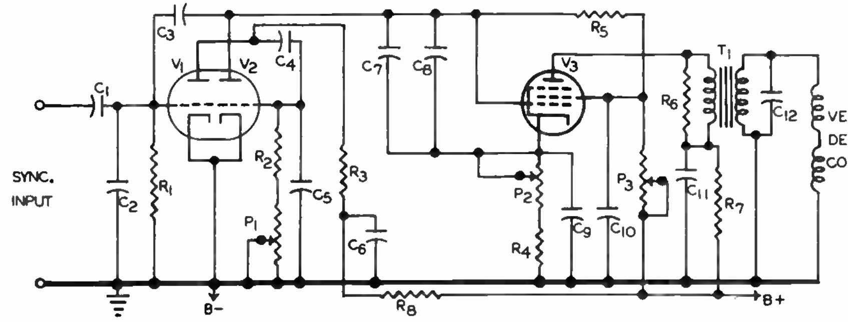

FIGURE 9

TPC-8

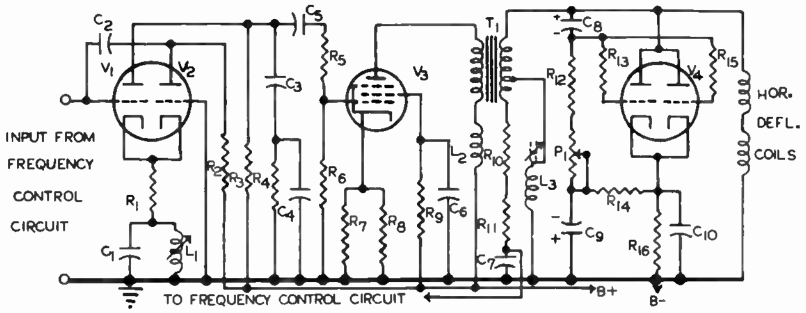

FIGURE 10

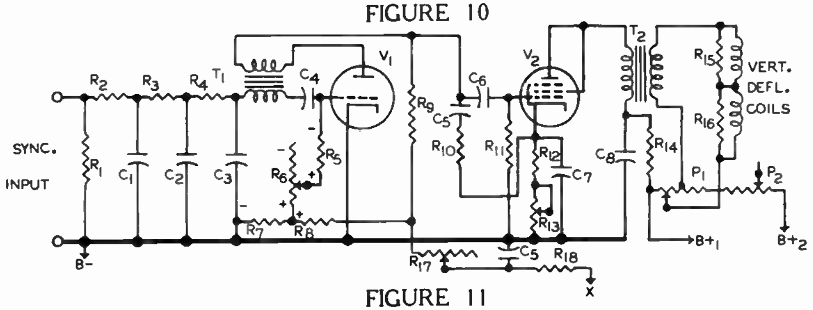

FIGURE 11

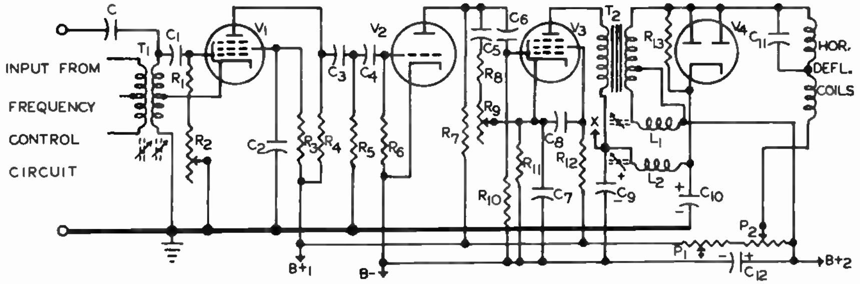

FIGURE 12

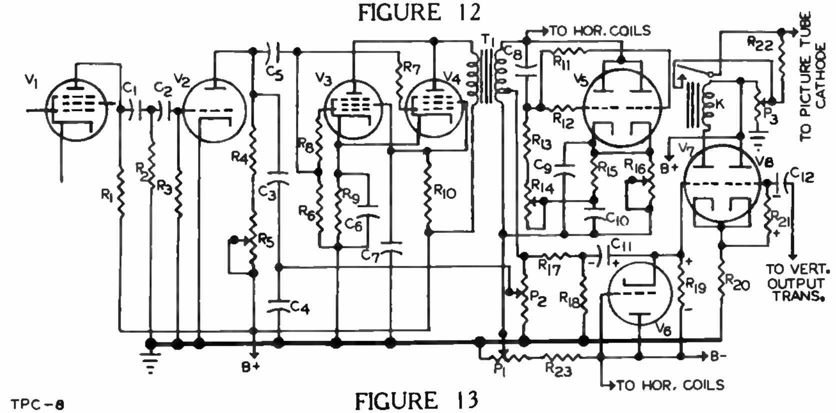

TPC-8

FIGURE 13

Cut along this line and send in for grading

DeVRY Technical Institute

Affiliated with DeFOREST'S TRAINING, INC.

4141 WEST BELMONT AVENUE CHICAGO 41, ILLINOIS

QUESTIONS

1

How many advance Lessons have you on hand?..................................

Print or use Rubber Stamp.

Name.. Student No......................................

Street...Zone......................... Grade...............................

City...State................................ Instructor.........................

Write your answers on the "Ans." line below each question. If more space is needed use reverse side of this page.

1. **What is an advantage of electrostatic deflection circuit arrangements?**

Ans...

2. **In the circuit of Figure 1, what unit controls the frequency of the sawtooth generator?**

Ans...

3. **What is the purpose of the "feedback circuits" of Figures 1, 2, and 3?**

Ans...

4. **In the circuit of Figure 3, what is the function of variable resistor R_7?**

Ans...

5. **In most electromagnetic deflection circuits, what is the wave-form of the applied voltage?**

Ans...

6. **What name is applied to resistor R_8 in Figure 7, and what is its purpose?**

Ans...

7. **Why is a damping tube required in circuit arrangements like those of Figures 8, 10, and 12?**

Ans...

8. **Why is a damping tube made non-conductive during the flyback interval of a scanning cycle?**

Ans...

9. **Assuming actual operation, what use is made of the energy stored in capacitor C_{12} of Figure 8?**

Ans...

10. **Why is relay K employed in the circuit arrangement of Figure 13?**

Ans...

FROM OUR *President's* NOTEBOOK

MEMORY

How embarrassing it is to ask someone—"now how do you spell your last name?" to learn that his or her last name is spelled as MOST Smiths spell it—S-M-I-T-H.

The facilities Providence gave us for storing away the impressions received through our eyes and ears, were intended for a wider use than for things that might be filed away under "FUN", "THRILLS" or "ROMANTIC ADVENTURES."

The deep recesses of our minds were provided us to safely keep ALL the memories and Impressions of People, Things and Events which at some future date might be tremendously important to us.

To get names, dates or material of whatever nature into that "file" is not a matter of "finding room" for it. There's always plenty of room—even for trivia. It's a matter of deep and sincere Attention, Concentration and Undivided Interest in what we See, Hear, Read or Discover for Ourselves.

Using that formula "A+C+I"—Memory seldom **Fails.**

Yours for success,

E. B. DeVry

PRESIDENT

PRINTED IN U.S.A.

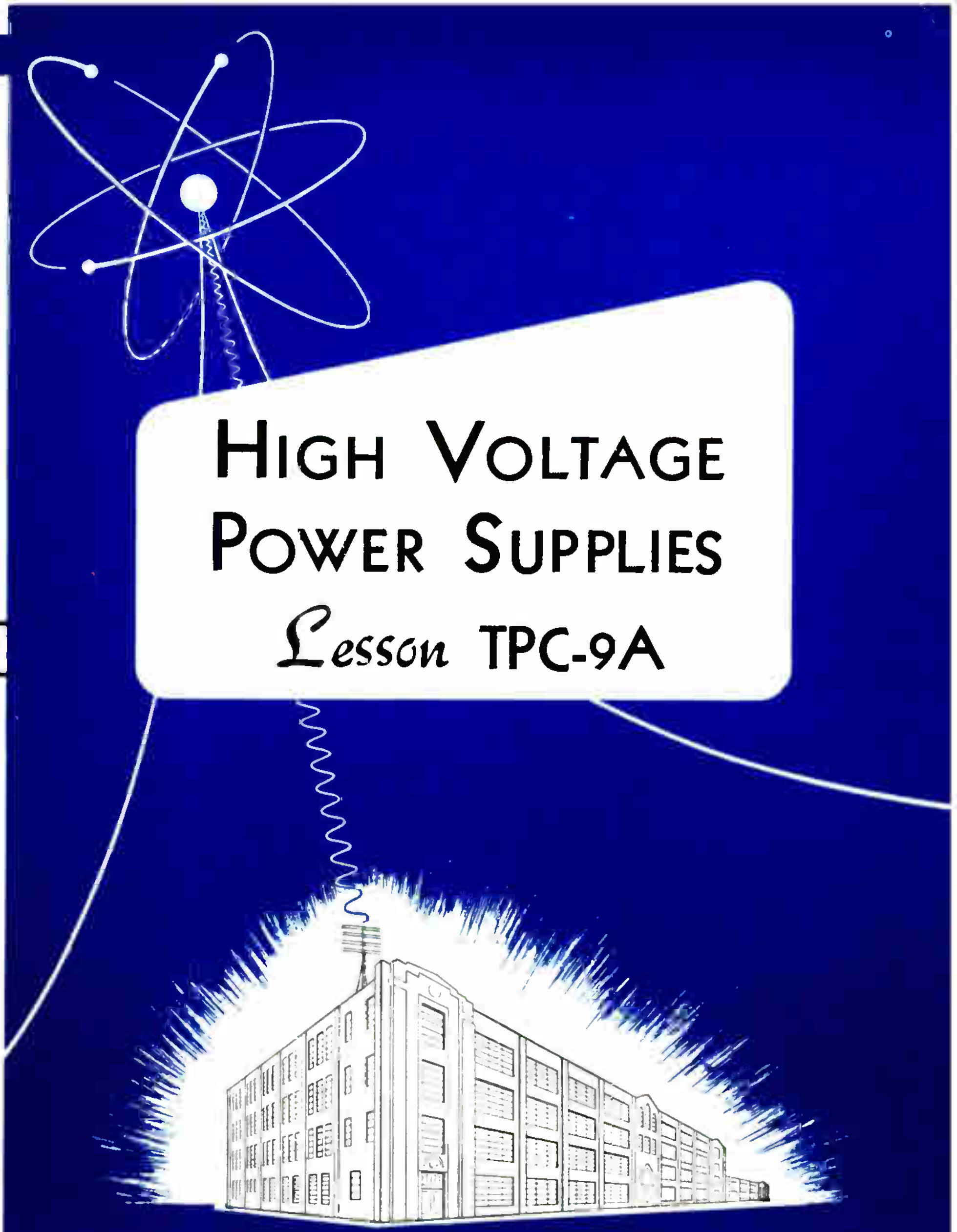

HIGH VOLTAGE POWER SUPPLIES

Lesson TPC-9A

DeVRY Technical Institute
4141 W. Belmont Ave., Chicago 41, Illinois
Affiliated with DeFOREST'S TRAINING, INC.

TPC-9A

HIGH VOLTAGE POWER SUPPLIES

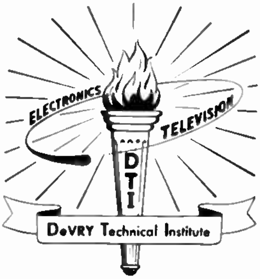

4141 Belmont Ave.
Chicago 41, Illinois

The monitor console for a television studio. The home type receiver (under clock) may be used to monitor the transmitted program. Each of the monitoring units contains its own high voltage supply.

Courtesy WMAR-TV

Pulse Circuits

HIGH VOLTAGE POWER SUPPLIES

Contents

PAGE

A fool beholds only the beginning of his works, but a wise man takes heed to the end.

The test of a first-rate work, and of your sincerity in calling it a first-rate work, is that you finish it.
—Arnold Bennett

HIGH VOLTAGE POWER SUPPLIES

In an earlier lesson we explained that the grid, plate, screen grid, and heater voltages for most tubes employed in electron apparatus are obtained from a "low voltage" power supply which may be operated from the common 117 volt house lighting supply or from batteries by employing a suitable vibrator or interrupter. A typical supply of this type provides an output of from 100 to 400 volts with current up to 200 or 300 milliamperes. However, to produce an acceptably bright image on the screen of a cathode ray tube, or to permit satisfactory operation of a Geiger-Mueller radiation detector, potential differences on the order of a thousand or more volts are required, although the current drain is low, seldom exceeding a few milliamperes.

To meet the requirements of high voltage-low current circuits, five general types of power supplies have been developed. Known generally as 60 cycle, flyback, pulse, r-f, and vibrator, each type is slightly different in design and operation, and therefore, these are described separately in this lesson.

Although shown connected to cathode ray tubes in many of the Figures for illustrative purposes, these supplies may be employed with any apparatus requiring a high voltage at a relatively low current.

60 CYCLE SUPPLIES

Except that its power transformer, rectifier tube, and filter components are designed for operation at higher voltages, the 60 cycle, high voltage power supply is similar in design and operation to the low voltage types described in a previous lesson. Because of the low current required, high voltage supplies usually employ half wave rectification, and the usual filter chokes are replaced by resistors of such resistance that the filter capacitors need a capacitance of only .05 μfd or less for the proper t/T ratio.

Oscilloscope Power Supply

To illustrate these similarities and differences, the schematic diagram of a combined high and low voltage power supply as employed in a cathode ray oscilloscope is given in Figure 1. Shown in the lower part of the diagram, the low voltage supply consists of full-wave rectifier tube V_3, and a number of output filter components. One low voltage transformer secondary is connected across the V_3 filament while taps on the larger secondary supply equal voltages between each of the V_3 plates and ground. Three output voltages are available: one of 350 volts is filtered by C_6, L_1, and C_7, one of 250 volts, obtained across C_8 with R_{10} and C_8 serving as an additional filter, and a third output of 395 volts, filtered by C_9, L_2, and C_{10}.

The high voltage supply includes the portion of the power transformer secondary between the ground tap and the upper end, half wave rectifier tube V_2, filter capacitors C_3, C_4, and C_5, filter resistors R_4 and R_5, and voltage divider R_6, P_2, R_7, R_8, and R_9. V_2 is connected so that the high voltage output is negative with respect to ground. Electron flow is from the V_2 filament, through the tube and through R_4, R_5, R_6, P_2, R_7, R_8, and R_9 to ground, and from ground, the path is completed through the transformer secondary winding to the rectifier filament. As indicated, filter capacitors C_3, C_4, and C_5 are charged with their ungrounded plates negative.

Connected to the junction between resistors R_5 and R_6, the cathode of the electrostatic type cathode ray tube, V_1, is at a potential of −2900 volts. The cathode ray tube control grid connects through R_1 and R_2 to the junction between R_4 and R_5, and therefore, is negative with respect to the cathode. Providing a means of controlling the brightness of the image, the V_1 negative grid bias may be varied by adjustment of the brightness or intensity control P_1.

Connected to the slider of P_2, the V_1 focusing electrode is positive with respect to the cathode. Internally connected together, the pre-accelerating electrode and the second anode are supplied from the +250 volt output of the low voltage supply, and therefore, these elements are $250 + 2900$ or 3150 volts positive with respect to the cathode. With this circuit the high and low voltage supplies are connected series-aiding to provide the high voltage needed for the cathode ray tube second anode.

To prevent arc-over due to a high difference of potential between the V_1 heater and cathode, the heater is isolated from the other tube heaters by a separate winding. As a protection against high voltage shock, interlock plug PL is included in the line which connects the 117 volt a-c power source to the primary of transformer T_1. This plug is arranged mechanically to open when the oscilloscope cover is removed.

Voltage Doubler

A second application of the 60 cycle type supply is illustrated in Figure 2. Here, tubes V_1 and V_2 and capacitors C_1 and C_2 form a voltage doubling circuit. Applied to the primary of transformer T_1, the 117 volt a-c is stepped up to about 4400 volts rms across L_1. During the alternations that the upper end of L_1 is negative with respect to the grounded end, V_1 conducts and charges C_1 to approximately the peak applied voltage, which is 1.4 x 4400 or about 6000 volts, and to the polarity indicated. During the alternations that the upper end of L_1 is positive with respect to the grounded end, its voltage is applied series-aiding with E_{C1}, causing V_2 to conduct, thus charging C_2 to approximately twice the peak or about 12,000 volts. Abbreviated as kv, the term kilovolts often is used to represent thousands of volts when referring to the output potential of high voltage power supplies. Thus, in Figure 2 the 12,000 volt output is shown as 12 kv, and as indicated, it is applied through filter resistor R_4 to the anode of the cathode ray tube. In this case, the cathode ray tube cathode operates at or near d-c ground potential, however, because of their circuit connections, the V_1 and V_2 heaters are operated at high potentials above ground, and therefore, each employs a separate secondary winding.

The 60 cycle type supply has high power handling capabilities which are not needed, however, in many applications because of the low circuit current requirements. In some applications, the advantage of this type of supply is its ability to supply heavy current without excessive drop of its output voltage. However, because of the extremely high voltages employed, in many circuits this factor is a disadvantage due to the shock hazard pres-

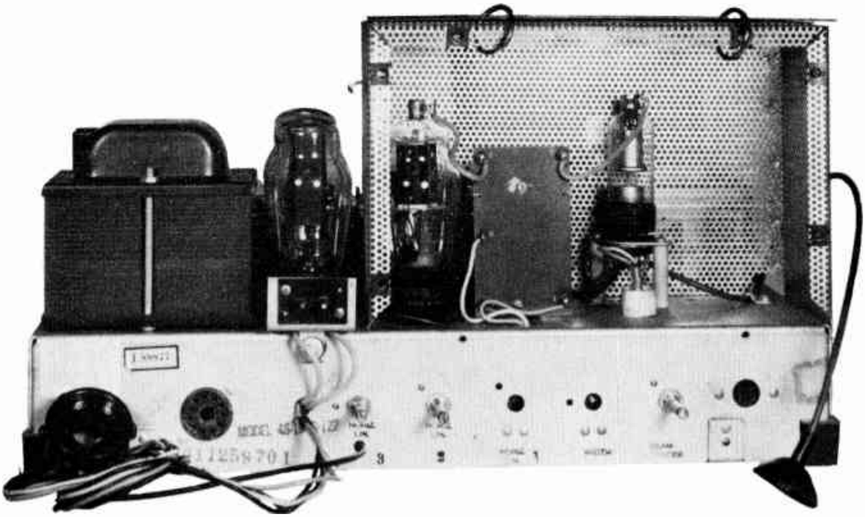

A view of the power supplies on a television receiver chassis. The low voltage transformer and rectifier are visible on the left and in the cage is the horizontal deflection circuit amplifier tube, transformer, and high voltage rectifier.

Courtesy Philco Corp.

ent when the equipment is being serviced. Also, most of the 60 cycle type power supply components are larger, heavier, and more costly than those used in the other types. It is for these reasons, that the 60 cycle type high voltage supply often is replaced with other types.

FLYBACK POWER SUPPLY

In the lesson on deflection circuits, it was explained that a sawtooth current is employed in the deflection yoke of the electromagnetic types of cathode ray tube and that during the flyback portion of the sawtooth cycle, this current decreases rapidly from a high to a very low value. When the deflection frequency is sufficiently high, the high-voltage pulse developed across the output transformer by the rapidly decreasing current may be rectified to provide the d-c voltage required for the cathode ray tube second anode.

To illustrate this type of supply, a partial circuit is shown in Figure 3. V_1 is the horizontal deflection circuit output amplifier, V_2 the high voltage rectifier, V_3 the dual diode damping tube, and V_4 the cathode ray tube. The output transformer contains the tapped primary L_1 with secondaries L_2 and L_3. L_2 supplies sawtooth current through L_4 and C_4 to the deflection yoke, the horizontal coils, while damping tube V_3 prevents oscillation in this circuit. The filter composed of C_2, L_5, and C_3, and tube V_3 form the "power feedback" circuit. Briefly reviewing the power feedback action, when the upper end of winding L_2 is positive, voltage E_{L_2} is applied series-aiding with the low-voltage supply output, causing conduction of V_3 so that C_3 is charged to the sum of these applied voltages. Through L_5, the voltage E_{C_3} charges C_2 and, as shown, E_{C_2} is used to supply the plate circuit of amplifier tube V_1.

The flyback power supply includes the winding L_1, rectifier tube V_2, and the filter consisting of C_6, R_4, and C_7. The output filter capacitor, indicated as C_7, is formed by the capacitance between the inner and outer conductive coatings of cathode ray tube V_4. As shown, R_4 connects to the internal coating which is joined to the anode inside of the tube. Thus, this coating serves as the positive plate, the glass envelope as the dielectric, and the grounded external coating as the negative plate of the output filter capacitor.

During the horizontal sweep period, the positive sawtooth voltage on the V_1 control grid causes the plate current of this tube to increase, thus building up a strong magnetic field around the transformer. At the end of the sweep interval, the V_1 grid sawtooth voltage drops rapidly, driving the grid negative to plate current cutoff.

Collapsing rapidly, the magnetic lines of force cut the L_1 winding, inducing in it a large voltage that shock excites the output transformer into oscillation at its natural resonant frequency, which for typical coil inductance and distributed capacitance, is between 75 and 100 kc. Damped by V_3 at the end of the first half cycle, these oscillations cause the voltage induced in L_1 to have a narrow positive alternation that reaches up to 5,000 volts on the V_1 plate and up to 9,000 volts on the V_2 plate.

An air core type, flyback, high voltage transformer. Note the three turns, below the main winding, which supplies filament voltage to the high voltage rectifier.

Courtesy Standard Transformer Corp.

Thus, the wave-form of the V_1 a-c plate voltage e_p, consists of a series of short, highly positive pulses which are separated by longer duration low amplitude, negative pulses. Capacitor C_2 is connected between the lower end of L_1 and ground so that, whenever the upper end of L_1 is positive, the voltages E_{L_1} and E_{C_2} are applied series-aiding to the circuit of rectifier tube V_2. The resulting conduction of V_2 causes input filter capacitor C_6 to charge to the polarity indicated.

At this time, electron flow is from the filament to the plate of V_2, down through L_1 to the C_2 positive plate, and from the negative plate of this capacitor to ground. From ground the electrons flow to the C_6 negative plate and from its positive plate to the filament of V_2. This action causes C_6 to be charged to the sum of the peak voltage across L_1 and E_{C_2}. Capacitor C_7 charges through R_4 to the same potential as C_6, and thus the +9,000 volt output is applied directly to the V_4 anode.

Ordinary types of high voltage rectifier tubes require a comparatively high filament power and are not designed otherwise for high frequency operation. Requiring only one-quarter watt of heater power, special rectifier tubes have been developed, such as the 1B3GT, the 1X2, and the 1V2 for use in circuits where limited power is available. Any one of these may be used as V_2 in the circuit of Figure 3.

Filament voltage for the V_2 diode is obtained by means of a one or two turn winding L_3 placed in the magnetic field of the deflection transformer. The location of this loop is somewhat critical because it must be placed so that it will develop a voltage which lies within the rated tolerance range of the V_2 filament. Series resistor R_2 serves to limit the current and prevent excessive filament heating.

Because of the high operating potentials on the V_2 electrodes, its socket must be placed on an insulated mounting that will prevent "arc-over", and all leads and connections must be kept at least 1 inch away from any grounded point. Also to avoid "corona" discharges into the atmosphere, the conductors must have large diameters, and the edges of the various components must not be sharp, but have rounded corners.

Cascade Voltage Multiplier

In some applications the required voltages are higher than the output of a circuit like that of Figure 3, and voltage multiplier systems employing two or more rectifiers are needed to furnish voltages of 10,000 to 30,000 volts or more. Figure 4 shows an arrangement in which three diodes, V_2, V_3, and V_4 are connected as a voltage tripler. V_1 is the horizontal sweep amplifier with its plate connected to the primary, L_1, of output transformer T_1. As indicated, secondary L_5 is connected to the horizontal deflection coils, while individual filament windings L_2, L_3, and L_4 are used for the rectifier tubes.

As in the circuit of Figure 3, here the V_1 plate voltage wave-form consists of high amplitude positive pulses with low amplitude negative alternations. Therefore, since only the positive alternations are used to produce a rectified high voltage, a modified voltage multiplier circuit is required.

As explained for Figure 2, in conventional type voltage multipliers, both alternations of the applied voltage are employed, with one capacitor charging during the positive alternation and then adding its voltage in series with the negative alternation to charge the second capacitor, etc. However, in the circuit of Figure 4, all the rectifier tubes conduct during the positive pulses and none conduct during the negative alternations across L_1.

The low voltage power supply is in series between the lower end of L_1 and ground, and during the positive pulse across L_1, rectifier V_2 conducts, charging C_1 to the polarity indicated. For this action, electron flow is from the filament to the plate of V_2, through L_1 to B+, and through the low voltage supply to ground. From ground electrons flow to the negative plate of C_1 and from its positive plate to the V_2 filament. The positive pulses occur at the horizontal scanning frequency, therefore, C_1 discharges only slightly between pulses and is recharged by each succeeding pulse so that its charge is maintained practically constant and approximately equal to the sum of the B+ and pulse voltages.

Between pulses, capacitor C_1 slowly discharges into C_4 through the high resistance R_1. The simplified diagram of Figure 5A shows the C_1 discharge circuit which includes the low voltage power supply, transformer winding L_1, capacitor C_4, and resistor R_1. To charge C_4, electrons flow from the C_1 negative plate to ground, and from ground to the negative terminal of the low voltage supply. From the positive terminal of this supply they travel through L_1 to the C_4 negative plate, and from the positive plate of C_4 the path is completed through R_1 to the positive plate of C_1.

The 1B3GT, a high vacuum, half-wave rectifier is designed for use in high voltage power supply circuits.

Courtesy General Electric Co.

Although the low voltage supply output, E_{LV}, is in series opposition to the charge on C_1, the magnitude of E_{C_1} is much greater than E_{LV}. Therefore, the electron flow takes place as described, and C_4 is charged to the polarity indicated and to a voltage equal to E_{C_1} minus E_{LV}. E_{C_1} is equal to the L_1 pulse voltage plus E_{LV}, therefore, the charge voltage E_{C_4} will be equal to the peak of the L_1 positive pulses. Due to the high resistance in the C_1 discharge path, C_4 charges over a relatively long period of time during which the charge on C_1 is maintained by the succeeding L_1 pulses as explained.

With C_4 charged to the polarity indicated in Figure 4, its voltage adds in series with the L_1 pulses to produce conduction of diode V_3, and this causes capacitor C_2 to charge to the polarity shown. For this action, electron flow is from the filament to the plate of V_3, to the positive plate of C_4, and from the negative plate through L_1 to B+. The path is continued through the low voltage supply to ground, from ground to the negative plate of C_1, and from the positive plate of C_1 to the negative plate of C_2. From the positive plate of C_2 the path is completed to the V_3 filament.

For simplicity, the various components included in the C_2 charging circuit are shown in the simplified diagram of Figure 5B. Here, the voltage E_{C_4}, the pulse e_{L_1}, and the output of the low voltage supply are applied series-aiding to the V_3 circuit and the rectified current causes capacitors C_1 and C_2 to be charged in series to E′ which is equal to the total of the applied voltages. However, since C_1 has been charged already to a voltage equal to $e_{L_1}+E_{LV}$, the net voltage causing conduction of V_3 is the charge on C_4. Therefore, C_2 is charged to a voltage equal to E_{C_4}.

During the intervals between the e_{L_1} positive pulses, C_2 discharges through R_1 and R_2 into C_5 as shown in the circuit of Figure 5C. Here, electrons leave the C_2 negative plate and flow through R_1 to the C_5 negative plate. From the C_5 positive plate the flow is through R_2 to the C_2 positive plate. As this action continues for a series of cycles, the charge on C_5 becomes approximately equal to that of C_2.

Referring to the connections and polarities of Figure 4, the L_1 positive pulses, the charge of C_4 and the charge of C_5 are series-aiding to cause conduction of V_4 and thus charge capacitor C_3 to the indicated polarity. As shown in the circuit of Figure 5D, the series aiding voltages, E_{C_5}, E_{C_4}, e_{L_1} and the low voltage supply output are applied to diode V_4 and capacitors C_1, C_2, and C_3 which are charged so that their total voltage, designated in the Figure as E″, is equal to the sum of the four applied voltages. Since the charges already existing on C_2 and C_1 are equal to the total of E_{C_4}, e_{L_1}, and E_{LV}, the charge, E_{C_5}, is the net voltage causing current in the V_4 circuit. Therefore, C_3 is charged to a voltage equal to E_{C_5}.

In Figure 4, the high voltage supply output is taken from series-connected capacitors C_1, C_2, and C_3 so that the voltage applied to the cathode ray tube anode is approximately equal to three times the pulse peak plus that of the low voltage power supply. Due to the cathode ray tube electron beam only, the current drain on the high voltage supply is extremely low, and the charges on these capacitors are maintained practically constant by the recharging action of the positive pulses across L_1.

PULSE TYPE SUPPLY

The third type of high voltage power supply operates on a principle similar to that of the flyback circuit. However, instead of employing the high voltage pulse that is developed across the primary of the horizontal output transformer, the pulse type supply employs a separate pulse generating circuit. The generator output is amplified and coupled through a step-up transformer to a rectifier, the conduction of which charges a capacitor to a d-c voltage approximately equal to the peak applied pulse. When employed with an electromagnetically deflected cathode ray tube, the pulse generator operates at the frequency at which the lines are being traced and the pulses are produced during the scanning beam retrace interval so that power supply interference will not be visible on the cathode ray tube screen.

Except that its output transformer has no deflection coil circuit secondary winding, the pulse type power supply is much like the horizontal deflection circuit. However, another difference is that the blocking oscillator employed is operated so that it does not oscillate unless a triggering voltage is applied to its grid circuit. This triggering signal is obtained from the output of the horizontal deflection circuit. Therefore, if for any reason the deflection circuit fails, no triggering voltage is applied to the grid of the power supply blocking oscillator. Hence no high voltage is generated, thus protecting the cathode ray tube screen from burns.

A flyback type, high voltage power supply. To reduce high voltage arc-over, the rectifier tubes and filter capacitor are mounted on an insulating fiber board.

Courtesy Allen B. DuMont Labs., Inc.

Figure 6 shows the circuit diagram of a pulse type high voltage power supply. Here, tube V_1 serves as a blocking oscillator pulse generator, the output of which is obtained from the grid and coupled through capacitor C_4 to the V_3 grid. The pulse amplifier output appears across a portion of the large winding of transformer T_2, while the entire winding serves as the secondary, and the stepped up voltage is applied to the circuit of rectifier tube V_4, and the filter composed of R_{10}, C_{10}, R_{11}, and C_{11}. As indicated, filter capacitor C_{11} consists of the capacitance between the high tension lead and its grounded shielding which with the high resistance of R_{11} form a t/T ratio sufficiently small for good filtering.

Connected between low voltage B+ and ground, the voltage divider R_2 and R_3 provides the V_1 cathode with a positive voltage that biases the tube slightly beyond plate current cutoff. The deflection coil sawtooth current is carried by resistor R_1 and capacitor C_2 which are connected in series with the horizontal deflection coils shown in the upper left of the diagram. During the horizontal flyback interval electrons flow in a direction which makes the upper end of R_1 negative with respect to ground, and this negative signal is coupled through C_3 to the cathode of the blocking oscillator.

The negative signal on the blocking oscillator cathode is equivalent to a positive signal on its grid, and thus initiates a cycle of oscillation. Blocking oscillator transformer T_1

and the R_4 and C_5 values are chosen so that oscillation takes place at the horizontal sweep frequency. Thus, triggered by the negative pulses from the horizontal deflection coil circuit, the frequency of the power supply blocking oscillator is synchronized with the receiver horizontal deflection circuit.

Generated at the grid of V_1, the pulse wave-form is shown as e_g in Figure 6. Coupled through C_4 to the grid of V_3, this voltage causes the plate current to have similar wave-form. That is, the V_3 plate current first increases and then very quickly falls until very low, after which it gradually rises once more to its original value. This plate current variation produces the V_3 plate voltage wave-form indicated as e_o. By the action of the autotransformer T_2, the positive peak of voltage e_o is stepped up to approximately 10,000 volts across the entire winding.

This high positive pulse is applied to the plate of rectifier tube V_4, causing conduction of the tube. Electron flow is from the filament to the plate of V_4, through T_2 to low voltage B+, and through this supply to ground. From ground, the path is completed to the negative plate of C_{10}, and from the positive plate through R_{10} to the V_4 filament. Thus, the T_2 pulse and the B+ voltage are applied in series-aiding to the rectifier circuit. As a result, C_{10} charges to approximately 10,000 volts with the indicated polarity. This voltage is supplied to the cathode ray tube anode through filter resistor R_{11} and the high tension lead.

Tubes V_2 and V_5 function as an electron voltage regulator to stabilize the high voltage output. Connected in series between B+ and ground, the gaseous type voltage regulator tube V_5 and resistor R_5 form a voltage divider that supplies a positive voltage to the V_2 cathode. With current in V_5, the voltage drop across this tube remains constant within very narrow limits, thus the V_2 cathode potential remains substantially unchanged regardless of variations in the low voltage power supply output. Due to this condition, the V_2 plate current is controlled entirely by the voltage on the control grid of this tube.

The V_2 control grid voltage is obtained from potentiometer P_1 which is a part of the voltage divider that is connected across capacitor C_{10}. In this circuit, R_{13} is much greater than the total of R_{12} and P_1 so that the positive voltage applied to the grid of V_2 is slightly less than that on the cathode. However, any variations in the high voltage across C_{10} will result in proportionate changes in the voltage applied to the V_2 grid.

The series components R_8, V_2, and V_5 form a voltage divider across the low voltage power supply output, with the V_3 screen grid connected to the junction between the V_2 plate and R_8. Any changes in V_2 plate current will cause corresponding changes in the IR drop across R_8, and in turn, this will result in variations of the V_2 plate and the V_3 screen potentials. Since the average plate current of a pentode tube is determined largely by its screen grid potential, any changes in the V_3 screen grid voltage affects the plate current and, therefore, the amplitude of the voltage pulses across T_2.

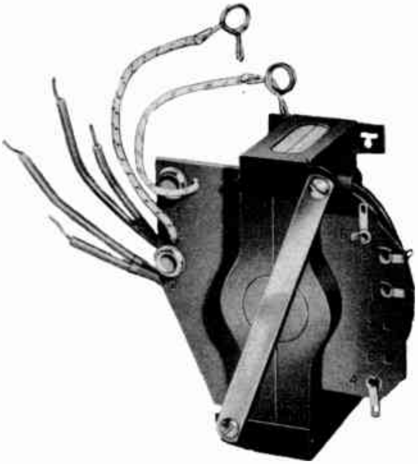

A powdered iron core type of high voltage transformer for "flyback" power supplies.
Courtesy Standard Transformer Corp.

For example, suppose an increase in the high voltage supply current drain causes a decrease in the potentials across C_{10}, thus causing the positive potential to decrease at the slider of potentiometer P_1. When the grid is made less positive, the V_2 plate current decreases and, due to the smaller drop across R_8, the V_2 plate and the V_3 screen voltages rise. This results in an increase in V_3 plate current so that the pulses across the T_2 winding rise to a higher positive voltage, thus causing heavier conduction of V_4 and charging C_{10} higher.

In a like manner, with less current taken by the load, any increase in the voltage across C_{10} results in the V_2 grid being more positive, and the increase in the plate current of this tube makes its plate, and the screen of V_3, less positive. The resulting decrease in V_3 plate current causes the pulses across T_2 to have lower amplitude, the conduction of V_4 is less, and the charge on C_{10} decreases.

1 KC POWER SUPPLY

Instead of being synchronized by a voltage pulse from an external source, the oscillator of a pulse type high voltage power supply may be permitted to operate continuously at a frequency determined only by the circuit constants. The circuit diagram of such a power supply is shown in Figure 7. Here, the triode section of tube V_1 functions as a free-running blocking oscillator, the frequency of which is approximately 1000 cycles per second.

From the oscillator grid circuit, the pulse is coupled through capacitor C_4 to the control grid of amplifier tube V_2. The amplifier pulses are stepped up across the winding of transformer T_2 and applied to the voltage tripler circuit consisting of rectifiers V_3, V_4, V_5, and capacitors C_8, C_9, and C_{10}.

This circuit utilizes both the positive and negative alternations of the voltage across the primary of transformer T_2, and when the upper end of the winding is positive, V_3 conducts, charging C_8 to the polarity indicated. During the negative alternations, the voltage E_{C8} is applied in series-aiding with the T_2 voltage to cause conduction of V_4 so that C_9 is charged as shown. C_9 is charged to the total of the two applied voltages, about 20,000 volts, and on the next positive alternation, C_9 discharges in series with the voltage across T_2, thereby causing conduction of V_5 which charges C_{10} to 20,000 volts. The total output of the circuit is equal to the sum of E_{C8} and E_{C10}, 10,000 +20,000, or 30,000 volts.

As indicated in the diagram, separate windings furnish current to the filaments of the high voltage rectifier tubes V_3, V_4, and V_5. To provide automatic voltage regulation, the a-c voltage from a fifth winding is rectified by the diode section of V_1 and applied as a negative bias on the V_2 control grid. During the induced voltage alternation when the V_1 diode plates are positive, C_7 charges to the peak applied voltage, with electrons flowing through the tube from cathode to plate, then through the transformer winding to the negative plate of C_7. From the positive plate, electrons flow to ground, then through R_2 back to the cathode.

C_7, R_7, and C_6 form a pi-type RC filter that removes the pulsations so that a constant negative voltage is applied to the junction between the V_2 grid resistors R_4 and R_5. In series-aiding, the voltages across R_5 and R_6 determine the V_2 grid bias, which in turn controls the amplitude of the plate current variations.

To illustrate the automatic voltage regulation, assume an increase in the high voltage supply output current. The increased load on the T_2 primary results in a decrease in the induced voltages in all of the T_2 windings, thus reducing the charge on capacitors C_7 and C_6 and lowering the V_2 grid bias. The resulting increase of V_2 plate current causes a greater induction, thus increasing the voltages of all the T_2 windings to compensate for the increased load.

On the other hand, when the load current is reduced, the automatic bias circuit reduces the plate current so that the induced voltages are reduced also. In a similar manner, the voltage regulator circuit compensates for changes in the low voltage supply output.

Although the V_1 grid is connected through R_3, to low voltage B+, the drop across this resistor is sufficiently high so that the grid is less positive than the cathode, which is connected to the junction between voltage divider resistors R_1 and R_2, across the low voltage supply output. So far as the pulse frequencies are concerned, the B+ end of R_3 is maintained at ground potential by capacitor C_3; therefore, R_3 serves as the oscillator output load resistor and, appearing across this resistor, the pulses are coupled by C_4 to the amplifier grid.

A high voltage type filter capacitor. Note the capacitor surface is corrugated to reduce high voltage arc-over.

Courtesy Erie Resistor Corp.

R-F POWER SUPPLIES

The r-f type high voltage power supply employs an oscillator to generate a high frequency voltage which is stepped up by a transformer and then rectified. Using this method, high voltage supplies which are capable of delivering up to 1 milliampere of current at from 1,000 to 50,000 volts have been designed.

The circuit diagram of an r-f type of high voltage supply is shown in Figure 8 where tube V_1 is a high transconductance pentode connected in a tuned-plate-grid-tickler type oscillator circuit. The tuned-plate circuit consists of coil L_1 and variable capacitor C_1, while the feedback to the grid circuit is supplied by the tickler coil L_3. Class C bias is developed by grid leak resistor R_1 and capacitor C_4.

L_1 is the primary and L_2 the secondary of a voltage step-up transformer. Applied to the rectifier, V_2, the secondary high voltage causes diode current which charges capacitors C_2 and C_3 to a high d-c potential. The voltage E_{C3} is applied to the voltage divider R_3, R_4, R_5, R_6, R_7, and R_8, from which there are connections to the anodes and to the horizontal and vertical deflection plates of the cathode ray tube as indicated.

Coupled to L_1, coil L_4 provides the V_2 filament current and eliminates the need for a separate, high voltage insulated filament transformer. Connected to B+ of the low voltage supply, the RFC aids bypass capacitor C_5 in preventing the high frequency from being coupled to the other sections of the receiver.

Employing self excitation with feedback from the primary winding, conventional oscillator circuits have an unstable tuning characteristic. Therefore, for greater stability, the oscillator of Figure 8 has the grid tickler, L_3, coupled to the secondary L_2. For the best compromise between stability, physical size and high voltage requirements, the oscillator frequencies range from about 50 to 500 kc and L_2 is

The 1X2 is a miniature half-wave rectifier tube designed for high voltage power supply applications.
Courtesy Hytron Radio and Electronics Corp.

designed to resonate with its distributed coil capacitance plus the V_2 interelectrode capacitance to a frequency within this range. The higher voltage supplies operate at the lower frequencies to prevent "arc-over" and to reduce power loss.

The transformer primary and secondary coils, L_1 and L_2, are tightly over-coupled in order to improve the stability of the d-c output voltage. To maintain good voltage regulation and efficiency under full load conditions, at least 20 times critical coupling is necessary, although this arrangement reduces the voltage step-up to about half of the maximum obtainable.

In the power supply circuit of Figure 8, the high voltage output can be varied by means of the tuning capacitor C_1. To obtain the most stable operation of the oscillator, C_1 is first adjusted to the maximum output voltage, after which the capacitor is adjusted to a slightly lower capacitance.

The maximum power output of the oscillator is very limited; therefore, to supply filament current as shown, a rectifier tube which requires a very small filament power such as a 1B3GT, 1X2, or 1V2 must be used as V_2.

Because of the high frequencies employed, adequate filtering is afforded by relatively low filter capacitance. Typical values for C_2

and C_3 in Figure 8 are from .01 μfd in the lower voltage circuits to about 300 μμfd in the supplies designed for highest voltage outputs. Also, due to the high frequencies used, coupling through the low voltage power supply to the other receiver circuits is negligible because bypass capacitor C_5 provides a low reactance r-f path to ground.

An advantage possessed by the r-f high voltage power supply is that body contact with any high voltage point lowers the Q of the tuned circuits to such a value that oscillation ceases immediately. The only charge then available is that which is stored in the filter capacitors. Because of the low capacitance, this stored charge is small, and therefore, the circuit is considered a "safe" high voltage supply.

Many variations of the basic circuit of Figure 8 are used in commercial applications, and Figure 9 shows one of these variations. Here, the two oscillator tubes, V_1 and V_2, are operated in parallel, coil L_1 and capacitor C_{12} form the tuned-plate circuit, and feedback is obtained by means of the grid circuit tickler coil L_2. Coils L_1 and L_3 form the primary and secondary, respectively, of the voltage step-up transformer. The r-f voltage across L_3 is applied to a voltage tripler circuit containing rectifiers V_3, V_4, and V_5 and capacitors C_6, C_7, and C_8.

From the positive plate of C_8, the supply output is applied through filter resistor R_8 to the second anode of the receiver picture tube. Coils L_6, L_7, and L_8 are low voltage secondaries for supplying the required rectifier tube heater currents, and also to provide a slight increase in the voltage applied to the rectifier circuits. These coils are coupled to L_3 so that when the ungrounded end of L_3 is positive, the ends farthest from the tube filaments are positive also, thus making the voltages series-aiding.

Since the voltage across L_3 has symmetrical wave-form, a conventional voltage multiplier circuit is employed. During the alternations that the ungrounded end of L_3 is positive V_3 is conductive and C_6 charges to the polarity indicated and to the peak value of E_{L3} plus E_{L6}, about 10,000 volts. Electron flow is from the filament to the plate of V_3 and through L_3 to ground. From ground, electrons flow to the negative plate of C_6 and from its positive plate through L_6 to the V_3 filament.

During the alternations that the ungrounded end of L_3 is negative, voltages E_{L3} and E_{L6} in series with E_{C6} cause conduction of V_4, which charges C_7 to the polarity indicated, and to the sum of E_{C6} and the peak of E_{L3} and E_{L6}, or about 20,000 volts. Electron flow here, is from the filament to the plate of V_4, through L_6 to the positive plate of C_6, and from its negative plate to ground. The path is completed from ground through L_3 to the negative plate of C_7 and from its positive plate to the V_4 filament.

When C_7 is charged and the ungrounded end of L_3 becomes positive again, E_{L3}, E_{L7}, E_{L8}, and E_{C7} are applied series-aiding to the V_5 circuit, and cause electron flow from the filament to the plate of V_5, through L_7 to the positive plate of C_7, and from its negative plate through L_3 to ground. From ground, electrons flow to the negative plate of C_6, from its positive plate to the negative plate of C_8, and from the positive plate of C_8 through L_8 to the V_5 filament. This charges C_8 to the polarity indicated, and although E_{C7} plus E_{L3}, E_{L7}, and E_{L8} equals 30,000 volts, the already existing charge of 10,000 volts on C_6 is series-opposed to E_{C7} and E_{L3}. Thus there is a net voltage equal to 20,000 + 10,000 − 10,000, or 20,000 volts to cause conduction in the V_5 circuit, and C_8 charges to this value. For the supply output, the charges of E_{C8} and E_{C6} are series-aiding, to provide a total output voltage of 20,000 + 10,000 or 30,000 volts.

The high voltage capacitors come with several types of connection to fit the design features of various power supplies

Courtesy Centralab Div. Globe Union, Inc.

At first thought, it might seem as though the charging action of C_8 would be short circuited by the conduction of V_3, since both V_3 and V_5 conduct on the positive alternation of E_{L3}. However, as explained previously, once capacitors C_6, C_7, and C_8 are charged, each rectifier conducts only for the extremely short interval necessary to restore the corresponding capacitor charge lost due to current through the load.

For example, E_{C6} places a positive bias on the V_3 filament so that this tube can conduct only during the instant that E_{L3} plus E_{L6} is greater than E_{C6}. In like manner, V_4 can conduct only when E_{L3} plus E_{L6} plus E_{C6} is greater than E_{C7}, and V_5 conducts only when E_{L3} plus E_{L7} plus E_{L8} plus E_{C7} is greater than E_{C6} plus E_{C8}.

A projection type television receiver requires a 20 to 30 KV power supply, therefore a doubler or tripler is used in the high voltage supply circuit.
Courtesy Emerson Radio & Phonograph Corp.

To provide a lower potential for the first anode of the cathode ray tube, a voltage divider consisting of resistors R_9 to R_{20} inclusive is connected across capacitor C_6. The first anode is connected to the slider on focus control potentiometer P_1 which, as shown, is connected across resistors R_{14} and R_{15} of the divider. This voltage is filtered by capacitors C_{10} and C_{11}, which are series connected to provide twice the working voltage of a single capacitor.

VIBRATOR POWER SUPPLY

Operating from a self-contained battery composed of two standard 1.5-volt flashlight cells, the high voltage power supply of Figure 10 permits portable operation of nuclear radiation survey instruments, the detector tubes of which require a potential of 900 volts at a current of approximately .2 microampere.

Since a transformer will not operate on direct current, the primary current must be interrupted at a relatively high rate by vibrator B_1. With switch SW open and no power applied to the circuit, the vibrator reed is in its normal resting position with the contacts closed. Under this condition, there is a complete path from the right side of the switch through the vibrator contacts and coil, the transformer primary, and the battery to the left side of the switch.

When the switch is closed, this circuit carries a current that magnetizes the vibrator core so that it attracts the reed. This action opens the circuit, thus interrupting the current and permitting the magnetic field to collapse. The reed springs back to its normal position. This movement closes the contacts, and the coil is re-energized to give another pull to the reed. In this manner, the reed is set into vibration, usually at a frequency of from 100 to 135 cycles per second.

A highly portable nuclear survey instrument. A vibrator type of power supply generates high voltages from a few dry cells.

Courtesy Beckman Instruments, Inc.

As the reed vibrates, the opening and closing of the contacts interrupts the current at the vibration frequency. In the transformer primary, the pulsating direct current has the same effect as would be produced by an alternating current, and therefore, an a-c voltage is induced into the secondary winding.

The high voltage across the transformer secondary is rectified by cold-cathode gas-filled rectifier tube V_1, with capacitor C_2 being charged approximately to the peak of the impressed a-c voltage. Resistors R_1 and R_2, and capacitor C_2 function as a filter to remove all a-c ripple from the output d-c voltage. In addition, the output potential is stabilized at 900 volts by voltage regulator tube V_2.

As explained earlier in the lesson, the characteristics of a gas-filled, glow-discharge tube are such that the potential difference between the electrodes does not change appreciably although the current varies over a rather wide range. Utilizing this principle, V_2 is a gas-filled, glow-discharge tube that is designed to maintain a constant potential difference of 900 volts between its electrodes when the current varies between the approximate limits of 5 and 20 microampere.

In series across capacitor C_2 the circuit composed of resistor R_1 and tube V_2 carries a current which is determined mainly by the impressed voltage and the total resistance of R_1 and V_2, the load current being disregarded since it is very small with respect to that through the regulator tube. As in any series circuit, the sum of the voltage drops developed by the current is equal to the applied voltage. Thus, the voltage across R_1 is equal to the difference between the C_2 and the V_2 voltages.

When the power supply is in use, the battery is slowly discharged so that the rectified voltage across capacitor C_2 gradually decreases. Due to the lower applied voltage, there is less current in the R_1V_2 circuit. However the V_2 characteristics prevent the potential difference between the tube electrodes from changing so long as the tube current is within the regulating range; therefore, the lower current develops a lower voltage drop across R_1 while the tube voltage is unchanged.

Continued use of the power supply results in the battery being discharged to the point where the rectified voltage across capacitor C_2 is too low to produce the required regulator tube current, and therefore, this tube ceases to stabilize the voltage, and the output decreases below 900 volts. In order to restore proper operation, the battery must be replaced.

* * *

STUDENT NOTES

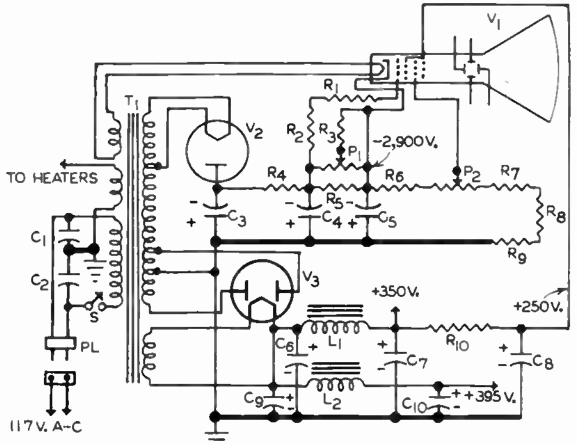

FIGURE 1

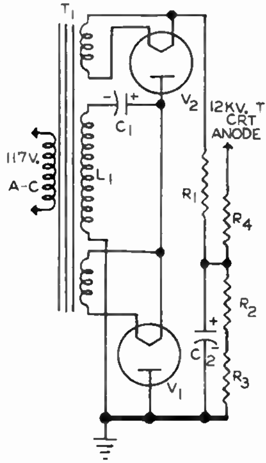

FIGURE 2

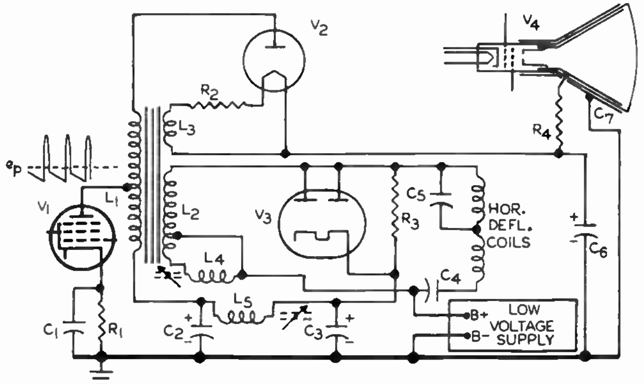

FIGURE 3

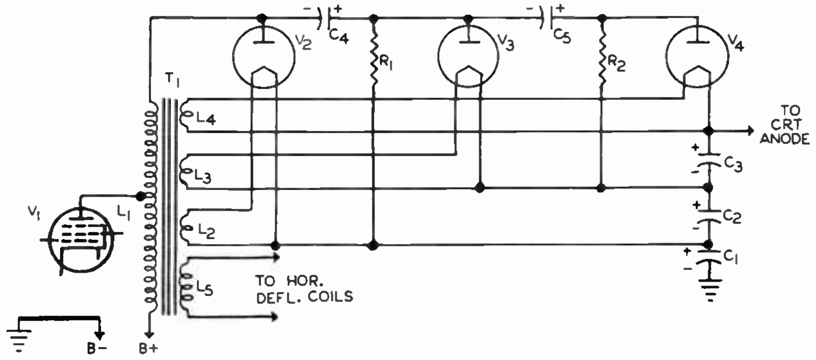

FIGURE 4

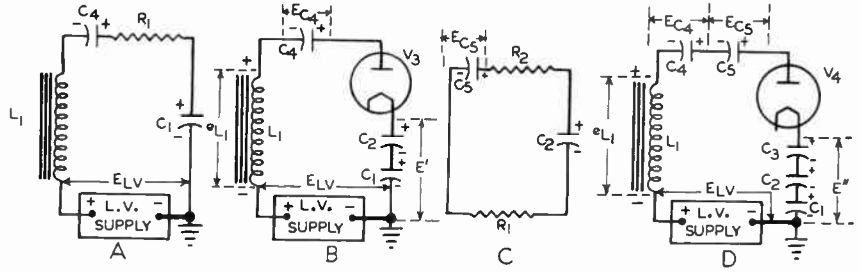

FIGURE 5

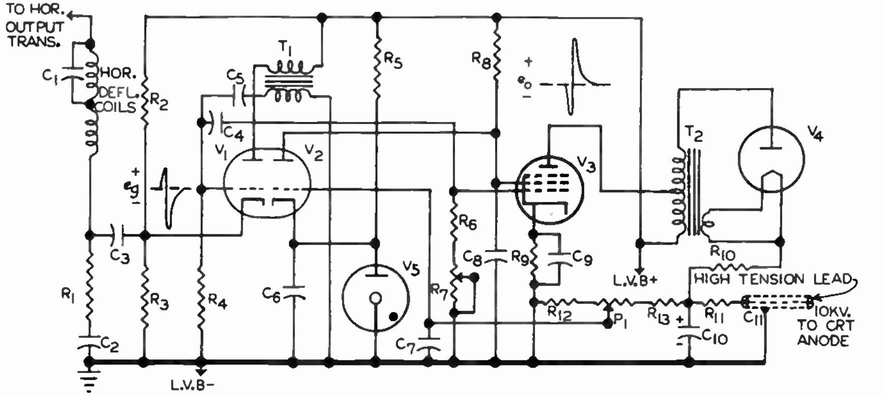

FIGURE 6

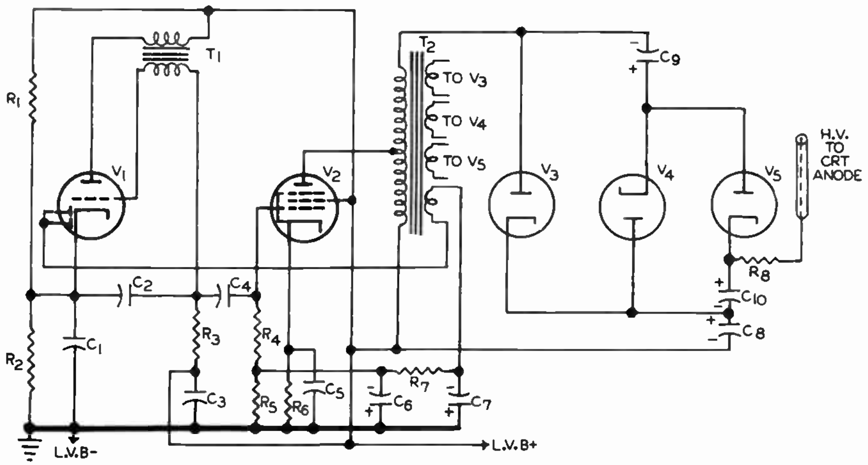

FIGURE 7

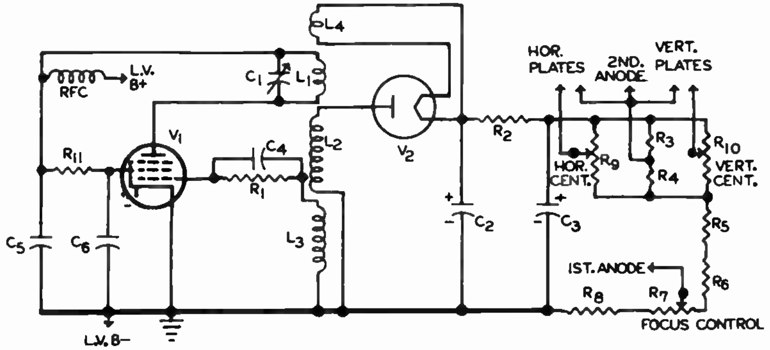

FIGURE 8

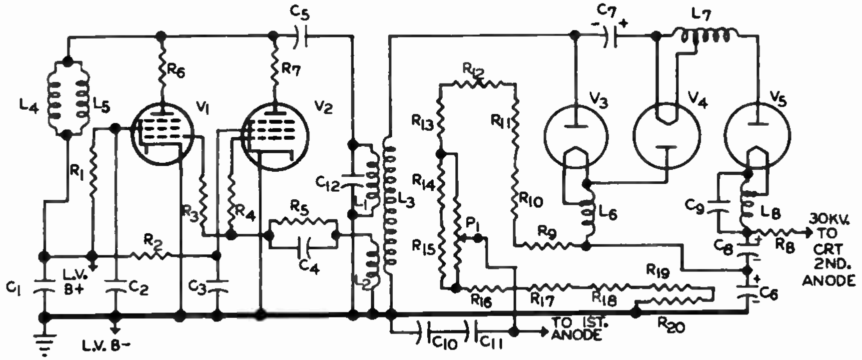

FIGURE 9

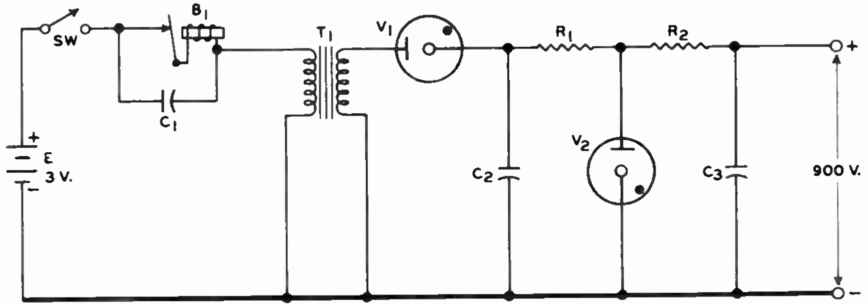

FIGURE 10

Cut along this line and send in for grading

DeVRY Technical Institute

Affiliated with DeFOREST'S TRAINING, INC.

4141 WEST BELMONT AVENUE CHICAGO 41, ILLINOIS

QUESTIONS

High Voltage Power Supplies—Lesson TPC-9A

1

How many advance Lessons have you on hand?..................................

Print or use Rubber Stamp.

Name.. Student No..

Street...Zone.......................... Grade.................................

City..State................................ Instructor.........................

Write your answers on the "Ans." line below each question. If more space is needed use reverse side of this page.

1. What are the five common types of "high voltage" power supplies?

Ans...

2. In comparison with low voltage power supplies, is high or low current supplied by the high voltage power supply?

Ans...

3. In the circuit of Figure 1, why is the filament winding of tube V_1 separate from the filament windings of tubes V_2 or V_3?

Ans...

4. In the power supply arrangement of Figure 3, what components are included in the "power feed back" circuit?

Ans...

5. In the circuit of Figure 4, and in terms of the B+ voltage and peak pulse voltage across coil L_1, what is the high voltage output?

Ans...

6. In power supply circuits like that of Figure 6, what is the advantage of operating the pulse generator at the line scanning frequency?

Ans...

7. In the circuit of Figure 6, what is the polarity of the cathode triggering signal required to start a cycle of the blocking oscillator?

Ans...

8. In the power supply circuit arrangement of Figure 7, what is the purpose of applying a rectified voltage to the control grid of tube V_2?

Ans...

9. What type of oscillator circuit is employed in the power supply arrangement of Figure 8?

Ans...

10. Why are power supply arrangements like that of Figure 8 considered "safe"?

Ans...

FROM OUR *President's* NOTEBOOK

ORIGINALITY

To a great many people, "Originality" is a synonym for Great Cleverness, Inventive Genius, Inspiration.

Actually, it could mean ALL of these things except that none of them mean much more than finding a new "angle" from which to approach an OLD Problem, Thought, Theory, Custom, Process or Belief.

"There is no new thing under the sun," said one of the prophets who'd doubtless be astonished to see what has happened to a LOT of things since he lived and prophesied.

His statement, nevertheless, still stands. It is as true a statement as it was five thousand years ago. For in truth, all that is new is the New Approach—the new application of old principles. And there are still plenty of "Angles" from which we have yet to view the wonders of our existence.

Don't try to be Clever. Seek not to be thought a "Genius". AND DON'T WAIT FOR INSPIRATION. Merely Study and Work—and keep on the lookout for NEW ANGLES.

Yours for success,

E. B. DeVry

PRESIDENT

PRINTED IN U.S.A.

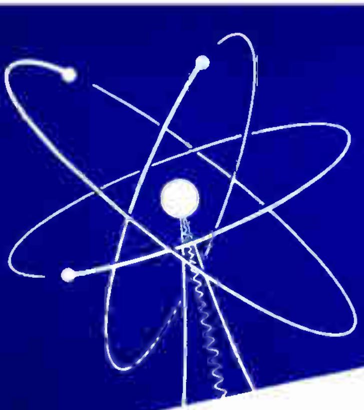

PARTS QUALITY AND LEAD PLACEMENT

Lesson TPC-10A

-10

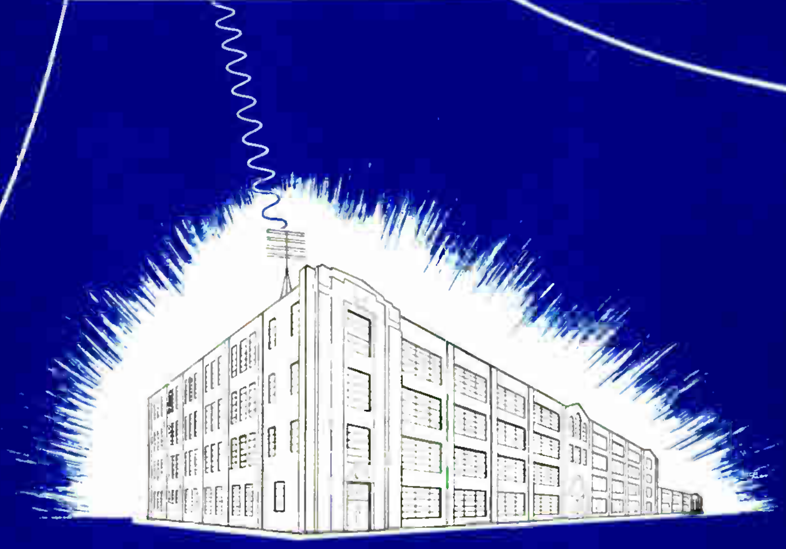

DeVRY Technical Institute

4141 W. Belmont Ave., Chicago 41, Illinois

Affiliated with DeFOREST'S TRAINING, INC.

TPC-10A

PARTS QUALITY AND LEAD PLACEMENT

ELECTRONICS TELEVISION
DTI
DeVRY Technical Institute

4141 Belmont Ave.
Chicago 41, Illinois

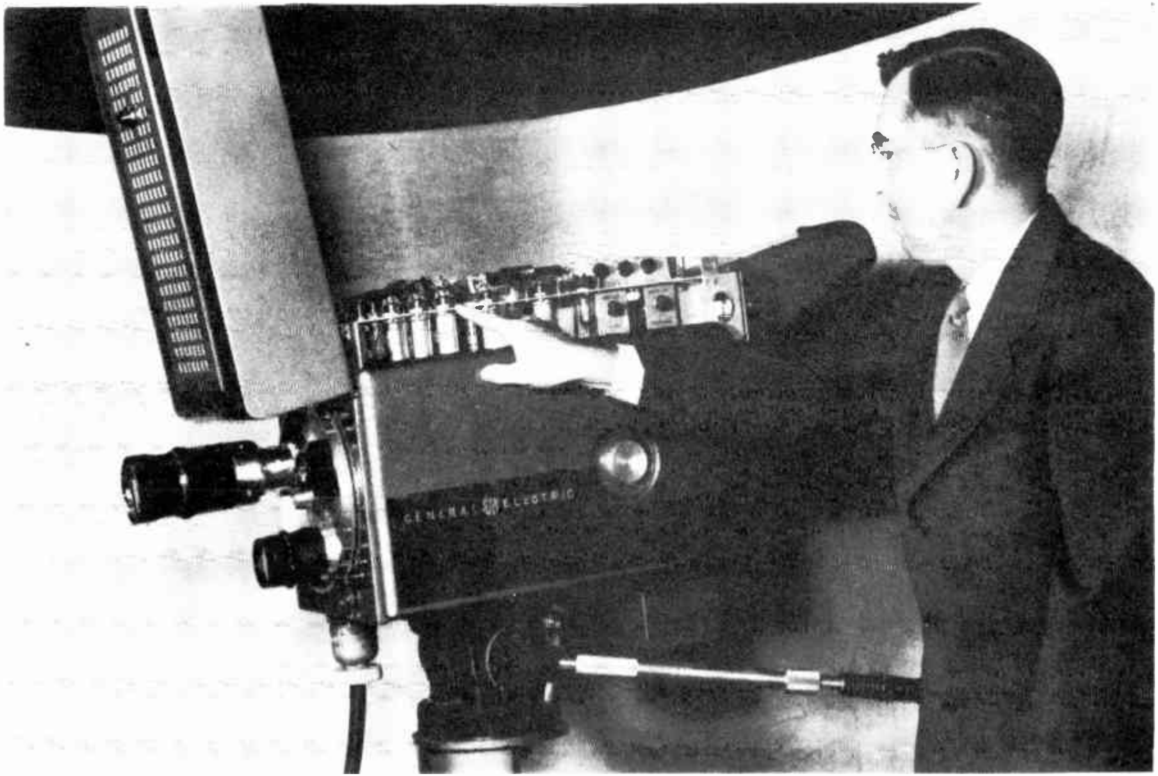

The television camera is carefully designed to amplify frequencies equally well over a wide range. The raised top cover shows some of the components.

Courtesy General Electric Co.

Pulse Circuits

PARTS QUALITY AND LEAD PLACEMENT

Contents

Success doesn't happen. It is organized, pre-empted, captured by concentrated common sense.
—Frances E. Willard

PARTS QUALITY AND LEAD PLACEMENT

In order to amplify the picture signals, the video amplifiers of both the television transmitter and receiver must pass a band of frequencies lying within the range of 30 to 4,000,000 cycles per second, and they must do so while maintaining an almost constant gain through this range. For transmission, carrier frequencies in excess of 50 megacycles are employed because of the channel width required for the picture signal, with its accompanying sound signal. In the receiver, the radio frequency signals are amplified at the signal frequency and then further amplified in intermediate frequency amplifiers operating at frequencies between 20 and 50 megacycles.

To detect the presence of charged particles due to cosmic rays or radioactive radiation, the Geiger-Mueller tube produces a voltage pulse for each charged particle entering it. For recording purposes, the magnitude of the pulse must be increased by an amplifier whose characteristics are such that its output reproduces the rapid rise and fall of the pulse. Also, other types of energy converting devices are employed for registering the occurrence of random or recurring events, and the amplifiers associated with them must be capable of passing the produced voltage pulses with no change of wave-form.

As explained in a preceding lesson, all wave-forms other than a pure sine wave are composed of numerous harmonically related sine waves of the proper amplitude and phase relation. In order to amplify the wave without changing its shape, the circuits must provide equal amplification for all of these frequency components. For instance, in one particular oscilloscope designed for use in nuclear research laboratories, the amplifiers provide essentially constant amplification over a frequency range extending from 0, or d-c, to 12 mc.

Thus, it may be seen that in television and nuclear instrumentation, amplifiers, detectors, and oscillators may be required to operate over an extremely wide frequency range. Due to the high frequencies involved in much of this apparatus, the resistance, capacitance, and inductance effects become appreciable quantities and have to be reckoned with in the proper design and maintenance of the electron equipment. Consequently, the construction, quality, and ratings of many of the components are quite critical.

For example, the rolled paper capacitor that may be used as a coupling device with no trouble in a low frequency amplifier cannot be used for the same purpose in an amplifier operating at 50 kc, for then the inductive effect of the rolled plates become so great as to destroy the desired performance of the capacitor.

Although these factors were pointed out in a previous lesson, since they are so important, it is the purpose of this lesson to describe those factors which determine the high frequency performance of resistors, capacitors, inductors, and electron tubes, and then consider certain chassis layout details and parts placement which also affect the high frequency operation.

The nuclear radiation counting instruments operate over a wide frequency range. The quality and placement of components is very important in these precision instruments.
Courtesy Tracerlab, Inc.

RESISTORS

From a pulse viewpoint, the fundamental faults in a resistor are due to the inductance and capacitance associated with it because of its physical construction. Composed of a strip of conducting material, the resistor has some self-inductance for, as it was pointed out in a previous lesson, every conductor has self-inductance, even when it is a straight piece of wire.

Inductance

A resistor has an inductance due to the pigtails which connect it to the associated circuit and due to the resistive element itself. So long as it has a finite resistance, it functions as a conductor even though a poor one. The inductance of such a conductor is proportional to its length. Hence, for low inductance, resistors must have short resistive elements and must be so connected that minimum length of pigtail is used.

Capacitance

Basically, a capacitor is two conductors separated by an insulating material called the dielectric. The capacitance is proportional to the area of the conductor surface and inversely proportional to the distance separating these surfaces. Hence, any two points separated by an insulator, however imperfect, have a capacitance between them. A resistor has a capacitance between its two end connections, since they are separated by the resistance element. To minimize this capacitance, the resistor should be long to increase the distance between conductors or the conductors should be small to reduce their effective surface area.

The equivalent circuit of resistor R_1 of Figure 1A is shown in Figure 1B. It may be seen that the inductance component L_R is considered to be in series with the resistance, the capacitance C_R is in parallel with the LR combination. Thus, the entire arrangement constitutes a parallel tuned circuit which is resonant at some frequency determined by the inductance and capacitance present.

Resonance

If the resistor is self-resonant within the band of frequencies impressed across it, the resonant impedance will produce a greater voltage drop than at frequencies above and below that value. Depending upon the resistor application, this condition usually will cause the response of the equipment in which the resistor is used to have an undesired hump or dip. In either case, since the result distorts the output wave-form, it is to be avoided as much as possible. Consequently, the desirable resistor is one with an extremely small inductance and capacitance, so that it resonates at some very high frequency, thus eliminating to a great extent the resonance effect within the operating frequency range.

As we pointed out, the physical size of a resistor has an effect on the inherent capacitance and inductance of a resistor; the longer resistors having greater inductance and less capacitance. However, since the resistor exhibits inductive effects at all frequencies below resonance, usually the lowest reactance is obtained when the inductive reactance is minimized by using short resistors.

For various applications, resistors are manufactured in two general types: carbon and wire-wound. Carbon resistors are made of a mix composed of carbon or graphite, and clay or bakelite. After the ingredients are combined in proper proportion, the mix is molded under pressure into a solid rod of rather small diameter which is baked and then cut into appropriate lengths and affixed with leads. Wire-wound resistors usually are composed of porcelain or ceramic tubes on which are wound suitable lengths of special resistance wire, the ends of which are attached to lugs affixed to the ends of the tubes.

Wire-wound resistors are of two types: inductive and non-inductive. In the non-inductive type, the inductance is kept very low by first doubling the wire and then winding it on the insulating tube with the two conductors parallel and close together. With this construction the magnetic field surrounding one half of the wire is canceled almost completely by the magnetic

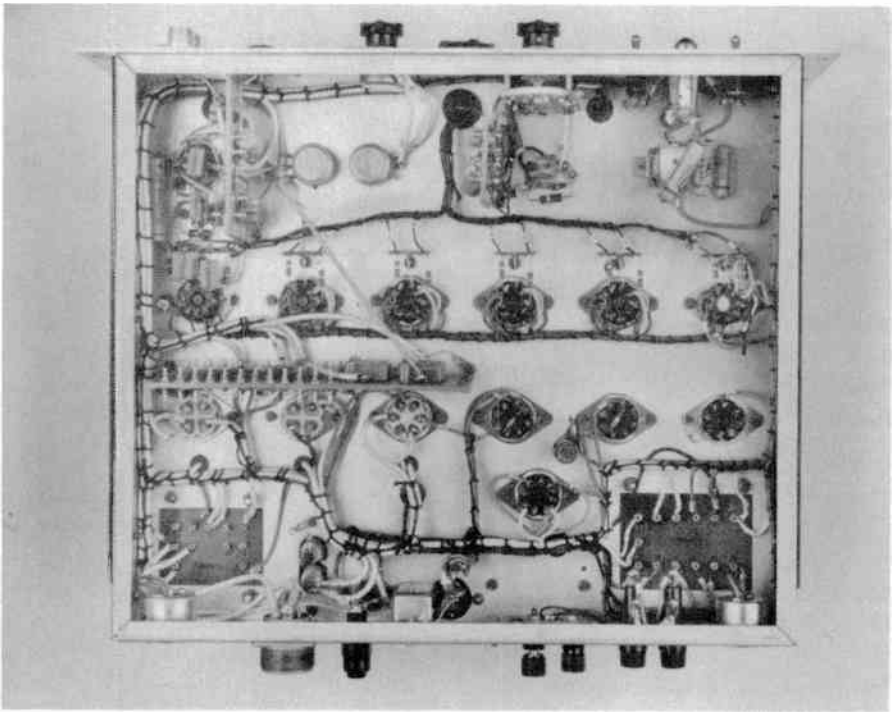

The chassis view of the nuclear instrument shown in the preceding illustration. Note the wiring and placement of components.

Courtesy Tracerlab, Inc.

field around the other half, thus reducing the self-inductance to a minimum. Hence, in circuits where the inductive effect must be kept small, the most desirable resistors are these non-inductive, wire-wound types.

Noise

All electric conductors contain free electrons that are in continuous random motion. At any instant, it may be expected that by pure chance more electrons will be moving in one direction than in another, with the result that a voltage is developed across the terminals of the conductor. This voltage varies in a random manner and thus represents noise energy distributed throughout the entire frequency spectrum.

Since the motion of the electrons results from thermal action, this effect is called the THERMAL-AGITATION NOISE. The magnitude of the thermal-agitation noise is proportional to the resistance across which the noise is developed, and the temperature of the resistor. Thus, resistors in electron circuits develop noise voltages which add to the desired signals.

Composed of a mixture of conducting and insulating materials, a carbon resistor contains many high resistance contact points between adjacent granules of conducting material. At each of these point contacts, the random motion of the electrons produce relatively large noise voltages which combine to produce the total noise output. Hence, since carbon resistors generate greater noise voltages than do wire-wound resistors, carbon types are to be avoided in those circuits where such noise cannot be tolerated.

Stability

Although most electron circuits are not too critical as to the resistance used and will function satisfactorily over a wide range, there are circuits which require fairly exact resistances which must remain fixed during operation. As resistors heat in operation, the resulting structural changes produce resistance variations that affect the operation of the circuit in which they are located.

From a stability viewpoint, carbon resistors are notoriously bad, and should not be employed in those critical circuits where an appreciable resistance variation cannot be tolerated. Also, the resistance of carbon resistors often changes with the application of pulse voltages with rapid rise and decay times. Although this effect is usually quite small, on occasion it does cause troubles.

CAPACITORS

Like resistors, capacitors also must be considered in connection with their associated characteristics. Due to their construction, capacitors have inductive and resistive components which become important quantities under certain operating conditions. The inductive component is due to the connecting leads and the size and shape of plates employed, while the resistive component is due to the resistance of lead, plate resistance, and a current leakage through the dielectric.

Resonance

The equivalent circuit of capacitor C_1 in Figure 2A is shown in Figure 2B by the series arrangement of L_C, C_C, and R_C. A series tuned circuit, this arrangement is resonant at some frequency determined by the inductance and capacitance present. If the capacitor is self-resonant within the band of frequencies impressed across it, its very low impedance may result in a greater or lesser circuit output voltage at the resonant frequency than at others above and below, a condition that may cause unsatisfactory operation of the apparatus. Hence, the desired capacitor is one that is self-resonant at a frequency well above the highest frequency to be utilized.

Because of the many conflicting characteristics which they must have, capacitors are manufactured in a wide variety of sizes and shapes, with paper, mica, ceramic, and air dielectric types being the most popular for use outside of the power supply.

In paper capacitors, the plates consist of long strips of tinfoil, separated by waxed paper, and rolled into a compact unit. Due to this construction, the capacitor possesses a relatively large inductive component that makes it unsatisfactory for use in high frequency circuits. However, these capacitors do provide a large capacitance in compact form which are entirely satisfactory for use in circuits where only direct or low-frequency alternating currents are present.

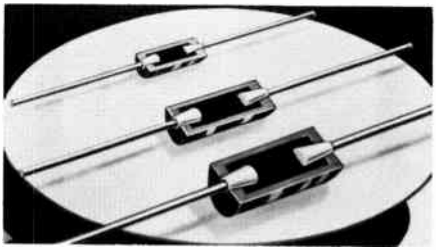

A cross section view showing the construction of carbon resistors. At high frequencies the resistor may act as a parallel resonant circuit due to the inductance and capacitance of the leads and resistance element.

Courtesy Allen-Bradley Co.

To reduce the inductive component to a minimum, ceramic, mica, and air dielectric capacitors employ flat plates and layer construction. Ceramic capacitors often consist of a flat ceramic disk, both sides of which are coated with a layer of silver, the connections to which are provided by short, wire leads. A variation of this type uses a ceramic tube about an inch long with a silver coating on both the inner and outer surfaces. Because of the extremely high dielectric constant and the dielectric strength of the ceramic, capacitances as high as 10,000 $\mu\mu$fd (.01 μfd) may be obtained without making the capacitor bulky.

Mica capacitors are composed of alternate layers of metal foil and thin mica sheets, and for units of comparable capacitance, are much larger than the ceramic type. Air capacitors consist of thin, rigid, sheet metal plates, and are larger still. As pointed out in an earlier lesson on capacitors, each type has certain desirable characteristics, and the choice of which one to use depends upon the operating conditions and the results desired.

Stability

Temperature variations and atmospheric changes have less effect on the ceramic than on the mica, and therefore, they are much more stable. Except for those used in tuned circuits, capacitors of electron equipment usually need not be of extreme accuracy or stability so far as the capacitance is concerned. For example, a coupling or bypass capacitor provides satisfactory operation where its capacitance is not the value called for in the design of the equipment, or even though the capacitance changes considerably while the unit is warming up.

However, for tuning purposes, the capacitance, stability, and accuracy are of extreme importance. The capacitance must remain unchanged throughout the entire temperature range encountered by the equipment. To provide the proper characteristics, ceramic capacitors are constructed so that the capacitance remains constant, or increases or decreases a definite amount for each degree of temperature rise. In this way, by employing the proper capacitor, any inductance variation may be counteracted by a corresponding capacitance change so that the resonant frequency of the tuned circuit is not affected by the temperature.

Voltage Rating

One additional factor that must be considered in the design of any electron equipment is the voltage rating of the capacitors employed. Depending on its thickness and the dielectric strength of the material used, each dielectric is capable of withstanding safely a certain maximum voltage, which is called the working voltage. The potential difference between its plates never should exceed the working voltage, if satisfactory capacitor life is to be realized.

INDUCTORS

With respect to the operation of high frequency circuits, inductors also must be examined in relation to their associated capacitance and resistance. Composed of one or more turns of wire, inductor L_1 of Figure 3A has internal resistance, as well as distributed capacitance between the turns, and therefore, it may be represented by the equivalent circuit of Figure 3B.

Self Resonance

Like the resistor of Figure 1, it may be seen that the inductor of Figure 3, is equivalent to a parallel tuned circuit, the resonant frequency of which is determined by the inductance and capacitance present. Care must be exercised in the choice of an inductor so that spurious effects are not introduced by this resonance. For example, if the inductor is used as a radio frequency choke and is self-resonant within the frequency band impressed across the unit, the resonant rise of impedance will cause a greater voltage to be developed across the choke at the resonant frequency than at others, the result being improper operation of the equipment.

Except for specialized applications, the distributed capacitance must be reduced to a minimum by different winding methods so that the self-resonant frequency is greatly in excess of the highest frequency to be impressed across the inductor. When this is done, the inductive component predominates and the desired circuit characteristics are obtained.

Since the capacitance between the coil turns, and the coil self-inductance, depend upon the turn spacing, and the coil length and diameter, changing any one of these factors will not only alter the inductance, it also will change the self-resonant frequency.

To meet the many requirements of electron equipment, inductors are manufactured with three different core types: air, powdered iron, and laminated iron. Air core coils are wound on tubes or rods of some insulating material, or are wound to be self-supporting. In either case, the very low magnetic permeability of the air core results

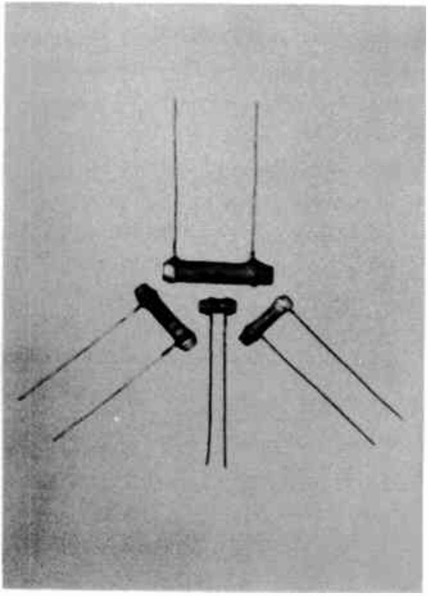

A group of small ceramic capacitors used in high frequency coupling and bypass circuits.
Courtesy Centralab, Div. of Globe-Union Inc.

in a coil of relatively low inductance. Hence, air core inductors are suitable for use in high frequency circuits, but not in low frequency circuits where the required inductances usually are quite high.

To increase its inductance, an inductor may be provided with a cylindrical core of powdered iron. Composed of a mixture of a bonding material and minute granules of high quality iron, this type of core increases the magnetic permeability greatly without a serious increase of losses. Thus, coils with powdered iron cores may be manufactured with considerably higher inductances than are possible with air cores.

By changing the position of the iron core within the coil, the inductance may be varied. This added feature is employed widely for tuning high frequency resonant circuits in which the capacitance must be kept to a minimum which does not greatly exceed the circuit stray capacitance.

For low frequency and power circuits, laminated iron cores are used because they may be arranged to provide the maximum of inductance with a minimum of wire in the coil. However, the losses caused by the laminated core increases greatly as the frequency is raised, and therefore, inductors of this type are unsuited for use in high frequency circuits.

Stability

Inductance stability often is of extreme importance, especially in circuits operating at very high frequencies, and therefore, great care should be exercised in the construction of the coil and its placement in the equipment. The inductor should be so constructed that the wire turns do not shift with respect to each other, and, if a core is used, it should be so arranged that once it is set to the proper place, it will not move accidentally.

As the equipment warms up and the inductor is heated, the metal expands so that there is a physical change in the coil dimensions, the result being an inductance variation that may cause improper operation of the circuit in which the coil is connected. Careful placement of the inductor will keep it from the source of heat and thus will reduce inductance variations due to this cause.

ELECTRON TUBES

The features of electron tubes that are of major importance in high frequency and pulse amplifier circuits are the transconductance, the interelectrode capacitance, the physical size, and the noise generated within the tube.

Transconductance

The transconductance of an electron tube is the ratio of a small change of plate current to the small change of grid voltage producing it, under the condition that all other electrode voltages remain constant. As such, the transconductance may be taken as a measure of the ability of a given tube to function as an amplifier, tubes with large transconductance being more suited for this application.

Often improved performance of electron equipment may be achieved by substituting new high transconductance tubes for older types of the same general class. However, indiscriminate substitution should not be resorted to because the increased amplification often leads to instability and unsatisfactory operation.

Interelectrode Capacitance

Because of their size, shape, and spacing, the various electrodes of an electron tube have a capacitance between them, as shown in Figure 4. These interelectrode capacitances become part of the total capacitance of the circuit in which the tube is connected, and therefore, have a distinct bearing on the circuit operation.

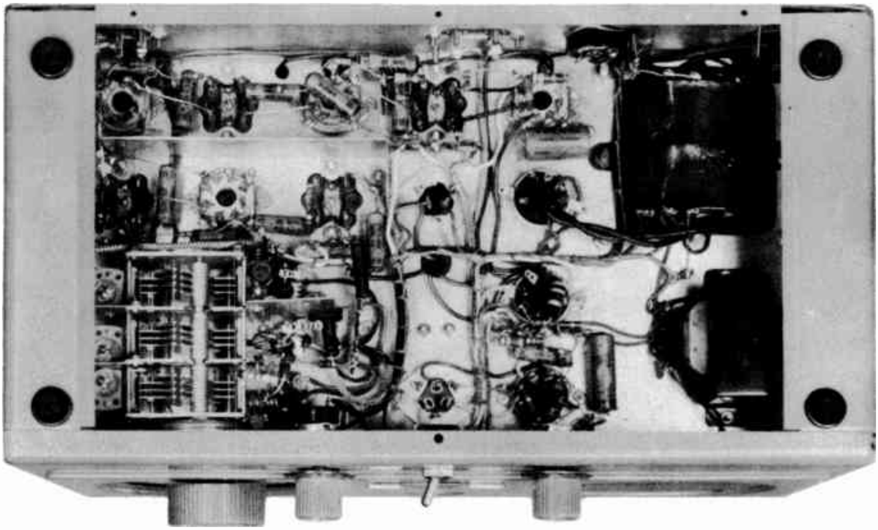

The under chassis view of a communication type receiver. Shielding, short leads, and placement of parts reduce signal losses due to stray inductances and capacitance of the wires and components.

Courtesy National Co., Inc.

In many cases, especially in low frequency circuits, the interelectrode capacitance is such a small part of the total that it may be ignored completely, and only the transconductance considered. On the other hand, in high frequency and pulse type amplifiers, this tube capacitance becomes an appreciable part of the total and cannot be neglected.

For example, in many high frequency amplifiers, no capacitor is connected across a resonant circuit, the circuit stray and tube capacitances being the only ones present. When replacing the tube of such a circuit, the new tube must have exactly the same interelectrode capacitances as the old. If it does not, the total capacitances across the tuned circuit is changed so that the resonant frequency is no longer the specified value, and improper amplifier operation results.

Lead Inductance

Composed of lengths of wire, the internal leads going to the tube electrodes from the socket pins contain an inductive component, and therefore, the tube may be represented by the equivalent circuit shown in Figure 5, where the small inductors in series with the electrodes represent the lead inductances, and the dotted capacitors represent the interelectrode capacitances. Due to the comparatively short lead lengths, the inductances may be ignored safely for all applications except those involving the extreme high frequencies.

At these frequencies, the lead inductances resonate with the interelectrode capacitances to produce undesired results. Thus, if the series arrangement of L_g, C_{gk}, and L_k is resonant within the band of frequencies impressed across the tube, the resonant frequency grid to cathode voltage E_{gk} may be considerably greater than that applied to the G and K terminals, the result being improper amplification of the input signal.

Lead inductance also may provide coupling between two electrodes. In particular, the cathode lead inductance, L_k in Figure 5, is common to both the grid and plate circuits, and therefore, any signal voltage developed across it is impressed on the grid circuit so as to cause degeneration. Again, because of the short lead length and low inductance, the coupling provided by the cathode lead inductance does not become important until very high frequencies are reached.

Lead inductance and interelectrode capacitance effects may be minimized by reducing the lead lengths and electrode areas, a condition achieved by decreasing the physical size of the tube, and arranging the connections so that they are extensions of the internal electrodes. For this reason, tubes designed exclusively for high frequency operation sometimes have peculiar shapes in an effort to reduce these effects to a minimum.

Noise

Random noise similar in nature to that produced in a resistance also is generated in an electron tube as a result of irregularities in the plate current. Although the cathode temperature remains relatively constant, the electrons are not emitted in a continuous stream, but seem to be expelled in bunches, and these bunches of electrons cause plate current variations that are reproduced as noise signals. This source of noise is common to all electron tubes.

The second noise source is the chance variation in the division of the current between two or more positive electrodes. When a tube contains two or more positive electrodes, the current divides between them in accordance with their voltage, area, and location. However, this current division is not constant, random variations of division occurring because the paths traveled by the electrons cause more of them to be intercepted by intervening positive electrodes at one instant than at another. Hence, tetrodes, pentodes, and other multigrid tubes are more noisy than triodes because they contain two or more positive electrodes.

A group of plug in type high frequency transformers. The resistance and distributed capacitance of these coils are determined by the size wire and spacing between turns.

Courtesy National Co., Inc.

Since the noise generated within the tube is amplified to the same degree as the signal applied to the tube input terminals, there is some definite minimum signal strength below which satisfactory performance can not be achieved with a particular tube. Because they generate less noise, triodes may be operated with lower signal strengths than may other tubes, and several unique circuits have been developed to permit satisfactory performance of these tubes in the high frequency range without the need to neutralize them.

A transmitter type amplifier tube. The interelectrode capacitances depend upon the size, shape, and spacing of the electrodes. Note the glass bulb is made large to dissipate heat.

Courtesy Sylvania Electric Products, Inc.

LEAD PLACEMENT

Because of the high frequencies involved in the generation and amplification of pulses, not only is the use of high quality parts of great importance, but equally so is their placement. Extreme care must be exercised when laying out the chassis and mounting the parts to arrange them so that a minimum of undesired interaction occurs between the various circuits. If this is not done, energy from one circuit may be fed into another in such a way as to cause oscillation or other improper operation of the equipment.

Grounds

One common source of instability in high frequency or pulse circuits is the use of more than one ground connection for each complete stage as shown in Figure 6. Here, components R_1 and C_1 represent respectively the cathode bias resistor and bypass capacitor, the ground connections of which are made at lug G_1. Inductor L_1 represents the grid tuning coil, the ground connection of which is made at lug G_2.

Referring to a previous lesson on electron tubes, it may be remembered that the grid circuit includes all of the parts between the tube grid and cathode terminals. Thus, in Figure 6, the grid circuit contains not only components L_1, C_1, and R_1 but also that portion of the chassis between ground lugs G_1 and G_2. In series with the coil, the chassis adds resistance and inductance and thus has an effect on the circuit tuning. In addition, any voltage drops appearing across the two ground points is lost insofar as the circuit is concerned.

But more important than this is the effect of the currents circulating in the chassis. As shown by the dotted lines of Figure 7, the radio frequency currents circulating between lugs G_1 and G_2 are not restricted to the area between the lugs but spread out to either side of these paths.

As a result of these currents, signal voltages appear in the chassis due to the inductance and resistance of the chassis. For example, if a voltage drop of 1.2 volts appears between ground lugs G_1 and G_2 of Figure 7 then each one of the vertical lines represent points on the chassis which are .2 volt potential difference with respect to adjacent lines. Thus, between lugs G_3 and G_4 exists .6 volt of the signal appearing between lugs G_1 and G_2. Consequently the voltage between lugs G_3 and G_4 varies not only at the rate of the signal impressed between them, but also at the rate of the signal applied across lugs G_1 and G_2. This coupling between the two circuits may result in a serious impairment of the circuit operation, such as degeneration, oscillations, or unwanted signals.

Short Leads

Another defect to be noted in Figure 6 is the use of long leads for connecting the resistor, capacitor, and the inductor into the circuit. These connections actually are extensions of the tube electrode; therefore they add to the tube lead inductance so that its effect becomes an appreciable quantity at a frequency considerably below that determined by the tube alone.

A much better arrangement of the components of Figure 6 is shown in Figure 8. Here, all of the ground connections are made at one point, thus reducing the possibility of coupling between stages through the common chassis. Also, this arrangement permits much

Due to its low interelectrode capacitances this twin triode, 12AT7, often is used in grounded grid amplifier circuits.

Courtesy General Electric Co.

shorter leads on resistor R_1 and capacitor C_1, and allows operation at higher frequencies before the inductive effect of the leads becomes detrimental.

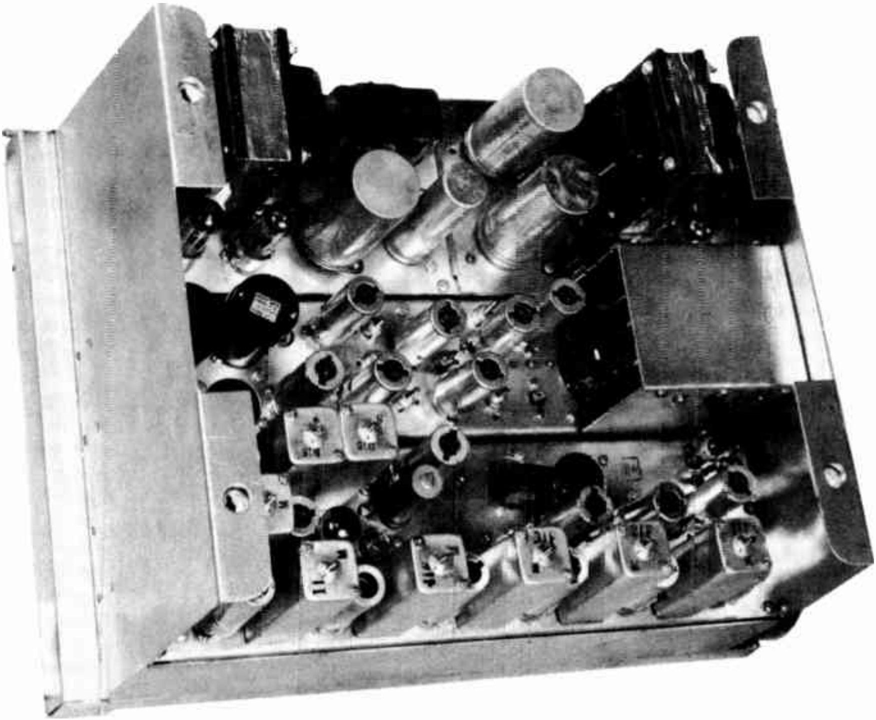

In high frequency communication equipment tube shielding is used due to close spacing.
Courtesy Mobile Communications Co.

Unwanted Coupling

Leads from two different circuits should not be run close together, otherwise the inductive or capacitive coupling between adjacent leads becomes sufficient to produce improper operation. When leads must cross they should be laid nearly at right angles to minimize both inductive and capacitive coupling.

Although shields can be used in many cases to stop unwanted coupling between parts or leads, it should be avoided whenever possible. In the first place, most coupling can be better prevented by careful placement of parts and leads. Second, the shield always introduces losses such as lowered Q for coils and added shunt capacitance for tubes, other components, and leads.

Also care should be exercised with all connections. A poor connection may produce erratic or noisy operation due to size or variation of resistance it introduces, or it may cause detuning effects due to the capacitance across the resistance thus introduced. Moreover, such a connection often is in more than one circuit. In such cases, the common impedance provides coupling between the two circuits in a manner similar to the coupling which occurs in the chassis situation of Figure 7.

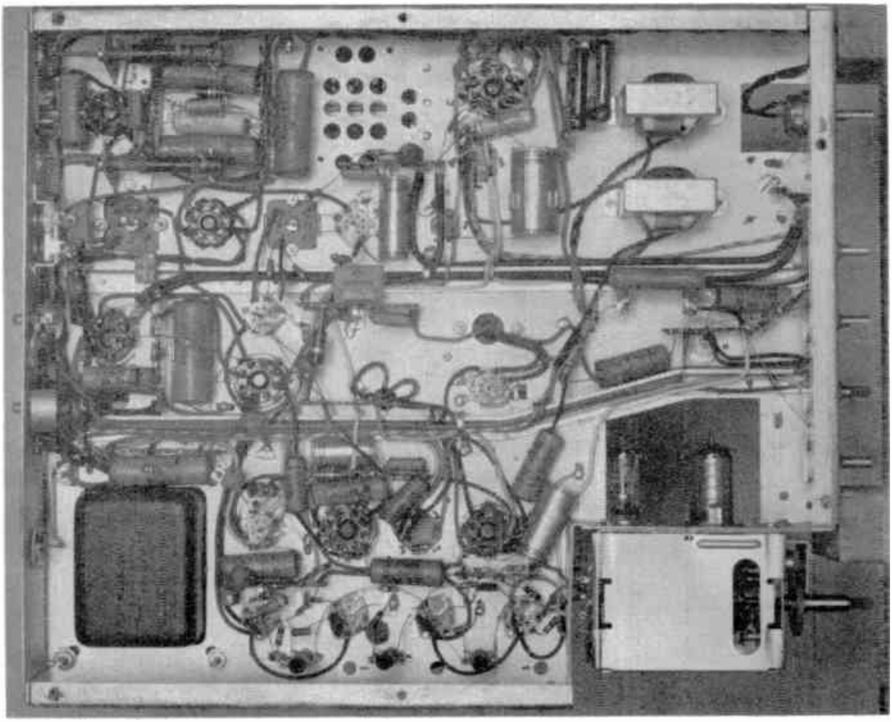

The under chassis view of a television receiver. By placing the h-f circuits in the lower part and the deflection circuits in the upper part of the chassis, interaction between these circuits is reduced to a minimum.

Courtesy The Magnavox Co.

PARTS PLACEMENT

When assembling high frequency electron equipment, considerable care must be exercised in the placement of the parts with respect to the chassis. For example, signal circuit components should be kept well clear of the chassis, while the power and heater circuit conductors should be kept close to it.

In Figure 9A, capacitor C_1 represents the signal coupling unit between the V_1 plate and the V_2 grid terminals. Because of the capacitor connections and location, there is a capacitance between it and the chassis as shown by dotted capacitor C_s in the Figure. In shunt with the V_1 plate to cathode and the V_2 grid to cathode capacitances, this capacitor tends to bypass signal energy so that it does not reach the V_2 grid. To prevent the energy loss this shunt capacitance can be reduced by keeping the spacing between the chassis and the coupling capacitor as large as consistent with short lead length.

On the other hand, this shunt capacitance between the circuit components and the metal chassis may be used to good advantage in the heater and power supply circuits where signals are unwanted. By placing the connecting wires close to the chassis as shown in Figure 9B, the shunt capacitance between the conductor and the chassis may be increased to the point where in conjunction with the lead inductance it filters most of the r-f energy and thus prevents such signals from reaching circuits where it may cause erratic operation.

From this lesson it may be seen that improper choice of parts and careless layout or wiring can create problems for which there is no cure better than correcting the faults thus introduced.

STUDENT NOTES

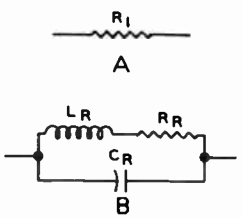

FIGURE 1

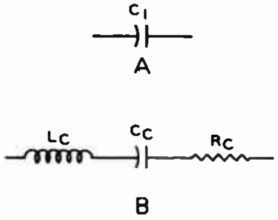

FIGURE 2

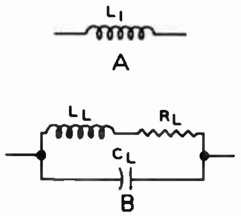

FIGURE 3

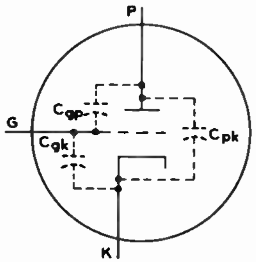

FIGURE 4

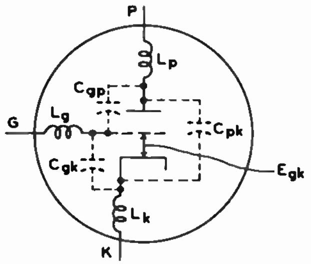

FIGURE 5

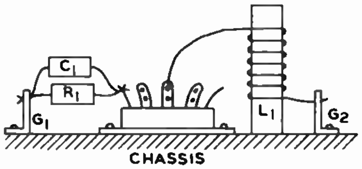

FIGURE 6

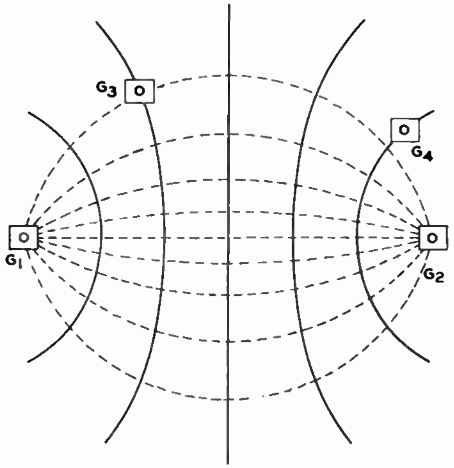

FIGURE 7

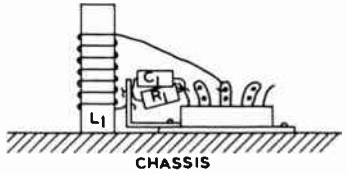

FIGURE 8

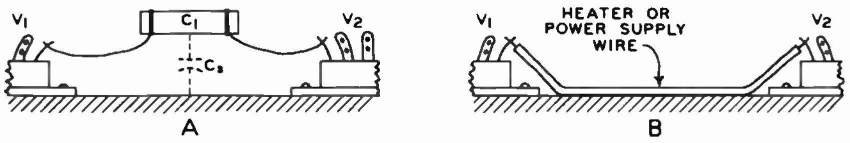

TPC-10

FIGURE 9

Cut along this line and send in for grading

DeVRY Technical Institute

Affiliated with DeFOREST'S TRAINING, INC.

4141 WEST BELMONT AVENUE CHICAGO 41, ILLINOIS

QUESTIONS

Parts Quality and Lead Placement—Lesson TPC-10A

1

How many advance Lessons have you now on hand? ....

Print or use Rubber Stamp.

Name.. Student No.................................

Street.............................Zone.................. Grade...............................

City...............................State.................. Instructor..........................

Write your answers on the "Ans." line below each question. If more space is needed use reverse side of this page.

1. **In addition to resistance, what other electric characteristics does a resistor have?**

Ans...

2. **What arrangement represents an equivalent circuit for a resistor?**

Ans...

3. **What two means minimize the inductance in a resistor?**

Ans...

4. **What type of circuit is equivalent to a capacitor?**

Ans...

5. **Why are paper capacitors generally unsatisfactory for use in high frequency circuits?**

Ans...

6. **Why are laminated iron cores unsatisfactory for high frequency applications?**

Ans...

7. **List four important features of an electron tube when used in pulse amplifier circuits.**

Ans...

8. **What two types of coupling result from incorrect lead or part placement?**

Ans...

9. **Why must signal leads and parts of high frequency equipment be kept clear of chassis?**

Ans...

10. **How is unwanted coupling through the chassis eliminated?**

Ans...

FROM OUR *President's* NOTEBOOK

PATIENCE

There are two kinds of Patience—that which is born of hopelessness, and the Patience that sustains those of Great Faith and Firm Determination.

Columbus was a patient man who spent years in search of someone to share his belief in a round world.

Madame Curie had Patience—endless patience—and along with it Complete Faith in the theories she shared with her husband. Working patiently side by side for years, they gave the world a great boon—Radium.

Ann Sullivan, Helen Keller's beloved "Teacher", had sufficient Patience to spend a lifetime developing a blind and deaf child into a Great Scholar—and a National Figure.

The other kind of patience is that of the mule which spends it's dreary lifetime in the deep, dark tunnels of the mine—without the faintest hope of ever seeing light.

Cultivate Patience—and with it, Hope. To the two, add your greatest effort—and your Reward will be Great.

Yours for success,

E. B. DeVry

PRESIDENT

PRINTED IN U.S.A.

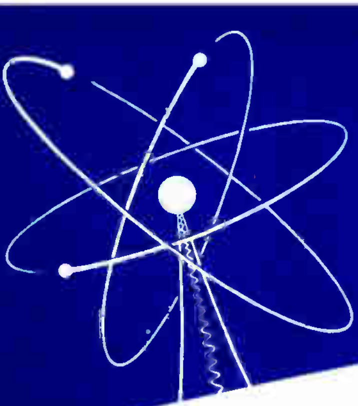

TELEVISION SYSTEM REQUIREMENTS

Lesson TPC-11B

-11

DeVRY Technical Institute
4141 W. Belmont Ave., Chicago 41, Illinois
Formerly DeFOREST'S TRAINING, INC.

TPC-11B

TELEVISION SYSTEM REQUIREMENTS

4141 Belmont Ave.

ELECTRONICS TELEVISION

DTI

DeVRY Technical Institute

Chicago 41, Illinois

Network television is made possible by microwave relay. The signals are beamed from one tower to another spaced about 35 miles apart.

Courtesy Federal Telecommunication Labs., Inc.

Television

TELEVISION SYSTEM REQUIREMENTS

Contents

> **It is remarkable to what lengths people will go to avoid thought.**
>
> **—Thomas A. Edison**

TELEVISION SYSTEM REQUIREMENTS

In an earlier lesson, we pointed out how impractical it would be to produce a television system which transmitted an entire picture simultaneously. The multitude of circuits required would make it economically impossible even over short distances. Consequently, all present day television systems use the sequential method of transmission. The brightness of the picture is transmitted a spot at a time, line by line, until the entire scene is covered, whereupon the whole procedure is repeated. When the spot is small enough and the scanning progresses rapidly, a picture of satisfactory quality is reproduced by economical, modern television systems.

In order to understand what factors do limit the quality of the picture by this sequential system, it is necessary to consider very carefully how the picture details are scanned.

SCANNING LINES

Hitherto, it has been assumed that in the vertical direction, a scanning pattern consisting of 500 lines will contain one picture element per line for a total of 500 elementary areas. However, this is not always true. When the smallest details of the picture are larger than the height of the scanning spot, the system reproduces substantially all of the detail present. Thus, in the vertical direction, the maximum number of elements is determined directly by the number scanned.

However, when the small details in the scene are the same or less than the height of the scanning spot, then the possible maximum number of elements, in the vertical direction, is determined by the number of scanning lines. In practice this value is reduced somewhat by the fact that all of the small picture details do not necessarily fall on, or coincide with, the position of the scanning lines.

Some possible variations between relative size and position of the picture details, with respect to the scanning lines, are illustrated in Figure 1. The groups A, C, E, and G on the left represent small details of the picture to be televised, and show their relative positions to the lines of the scanning pattern of the studio camera tube. Groups B, D, F, and H on the right represent the manner in which the corresponding picture information is reproduced on a receiver picture tube screen. For simplicity, only eleven scanning lines are shown, but, of course, they represent the action which occurs over the entire scanning area.

The two dark and two white areas, located between the two vertical lines near the center of Figure 1A, represent small details, or elements, of the scene to be televised. As the spot moves from left to right across scanning line 1, during the time it passes over the dark detail, the information transmitted to the receiver causes its scanning spot to be reduced in brilliance and reproduce a dark area on the picture tube screen. Therefore, in Figure 1B, the small dark area in the center of scanning line 1 corresponds to the area covered by the dark picture detail on scanning line 1 of the camera tube in Figure 1A. This action is repeated as the spot moves across scanning lines 2 and 3.

For scanning lines 4, 5, and 6, the picture detail is white, and this information, transmitted to the receiver, causes its scanning spot to remain at maximum brilliance and produce a corresponding white area at the center of the screen.

So far, the image on the receiver screen corresponds exactly to the scanned object at the transmitter, because the division between the dark detail at the top and the white detail immediately below falls exactly on the boundary between the third and fourth scanning lines.

However, the division between this white detail and the lower dark detail falls in the middle of the seventh scanning line, while the lower limit of this dark detail falls in the middle of the tenth scanning line. Under these conditions, areas a and b in lines 7 and 10 of Figure 1A, contain exactly half the light of a completely white area. At the receiver, the corresponding information causes the screen to have some intermediate brilliance between black and white, or grey, at the instant the receiver tube scanning spot passes these points, as shown in Figure 1B by areas a′ and b′ on the seventh and tenth scanning lines.

Because the edges of the picture details do not coincide with the edges of the scanning lines there is a blurred or indistinct boundary between the elements of the reproduced image on the receiver screen. That is, the white and dark areas appear to overlap to an extent equal to the width of a scanning line.

The seriousness of this effect is inversely proportional to the size of the picture details, since the overlap region will be equal to the width of one scanning line whether the picture "detail" covers several hundred scanning lines, or but two or three as shown in Figure 1A.

For larger areas which cover many scanning lines, a "fringe" with the width of one line is not very evident, but if the details are small, as in Figures 1A and 1B, then the comparatively wide "fuzzy" region is very noticeable, giving that part of the image an out-of-focus appearance when viewed at close range. In practice, some of the picture element edges coin-

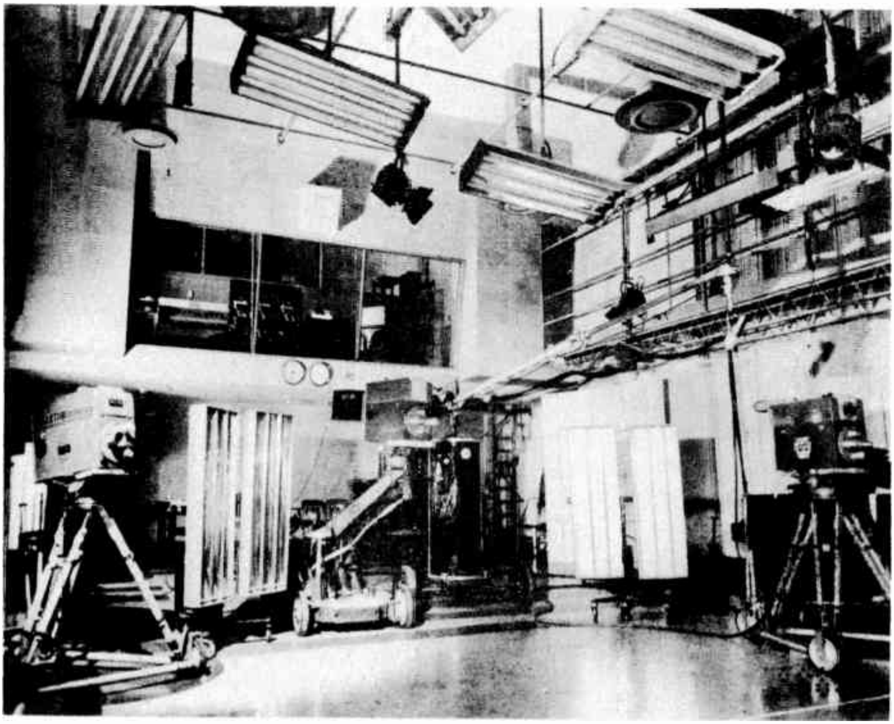

The cameras, microphones, and some lighting units are mounted on dollies, thus the equipment can be moved to the desired stage location quickly and easily. The control room is located in the balcony above the clocks.

Courtesy WCAU-TV Philadelphia

cide with the scanning lines and no fringes are produced, while others overlap the scanning lines. Many take intermediate positions, that is, they overlap, but not to the extent of covering half a scanning line. Therefore, the intensity of the fringes varies all the way from nearly white to black, depending upon whether a white or black picture element covers most of the overlapped scanning line.

Since only the edges of picture elements can produce these fringes, IMAGES CONTAINING MOSTLY LARGE OBJECTS ARE LESS LIKELY TO HAVE A FUZZY OR OUT-OF-FOCUS APPEARANCE THAN THOSE MADE UP OF MANY SMALL OBJECTS with a correspondingly larger number of edges.

The ideal conditions for transmission of maximum picture detail in the vertical direction are illustrated in Figure 1C and 1D where the vertical dimensions of picture detail are equal to the width of the scanning lines, and in addition, the elements are spaced and located so that they fall exactly on the scanning lines with no overlap. No grey areas are produced on the receiver screen, and with the black and white picture details immediately adjacent to each other, maximum image contrast is obtained. On the receiver screen, the reproduced image contains the same number of vertical elements as the object at the transmitter, which in this case is equal to the number of scanning lines. Therefore, if 500 scanning lines are used, then 500 vertical elements can be reproduced on the receiver screen.

The extreme opposite of this condition is shown in Figure 1E, where again, the picture details are equal in height to the width of the scanning lines. However, instead of falling exactly on the scanning lines, as in Figure 1C, the details straddle the lines. Therefore, as described for the seventh and tenth lines in Figures 1A and 1B, grey areas are produced on all the lines of the receiver image to form the pattern of Figure 1F. As neither black nor white areas are created, the reproduced image is simply a uniformly shaded vertical line, which is entirely different from the object scanned by the camera. No contrast and no detail is obtained, and if all of the details of the scene at the studio were so proportioned and positioned, the entire image would be lost. Figures 1C and 1D represent the best condition, while the worst possible case is represented in Figures 1E and 1F.

In actual practice, some of the picture elements will fall on the scanning lines as in Figure 1C, some will straddle the scanning lines as in Figure 1E, but most of them will occupy some intermediate position so that, although every reproduced line will not be completely white or black, as in Figure 1D, neither will they all be the same shade of grey, as in Figure 1F. Therefore, in the parts of the scene where the size of the picture elements is about equal to the width of the scanning lines, the average number of vertical picture elements reproduced on the receiver screen will be somewhat less than the number of scanning lines.

A third possible set of conditions is represented in Figure 1G where the height of the picture elements in the scanned pattern is only one-third the width of the scanning lines. At the top, the black and white elements are evenly spaced and do not straddle the boundaries between lines, but, at the bottom, the black elements, still equal to one-third the scanning line width, are randomly spaced so that the white elements vary in height.

As one-third of scanning line 1 is occupied by a black element and two-thirds by a white element, the transmitted information causes a light grey, closer to white than to black, area on the corresponding scanning line at the receiver. The shading covers the entire width of the line and the respective white and black picture elements are combined into one light grey element with a height equal to the width of the scanning line.

At the camera tube, scanning line 2 covers one white and two black picture elements, which combine to give a dark grey element in the corresponding area on the receiver screen. The scanning device responds only to the total light in the areas covered by the scanning spot at any instant, therefore, again, the individual picture details are lost, being merged into one, dark grey in shade and equal in height to the width of the receiver scanning line.

On scanning line 3, the action is the same as on line 1 to reproduce a light grey element and, like line 2, line 4 produces a dark grey element on the receiver screen. The height of each reproduced vertical element is equal to the total height of three elements in the original scene. Thus, for the top four scanning lines, the twelve original picture elements of Figure 1G are reduced to four in the reproduced image of Figure 1H. Although varying in shade, none of the reproduced elements are totally black or totally white like the elements scanned by the camera.

Summarizing this action: *the maximum number of vertical elements which can be transmitted is limited by the number of scanning lines, even though the original scene may contain more elements than there are lines in the scanning pattern.* Scanned by the lines of Figure 1G, the reproduced image of Figure 1H is only an approximation of the original object, being darker in the regions where the dark picture elements are concentrated and brighter in the regions where the white picture elements are concentrated.

The lower part of Figure 1G more closely resembles the conditions in an actual scene, and checking here, scanning lines 5 and 6 each cover the same amount of light as lines 1 and 3, consequently, grey areas of the same intensity are produced on the receiver screen. The white picture elements in scanning line 7 are very narrow, and therefore, a very dark, almost black element is produced on the picture tube screen. Continuing on down in Figure 1G, similar actions occur for all except line 10, which crosses an all white region and produces a white element on the pattern of Figure 1H.

Although the details in the scanned scene of Figure 1G are not reproduced exactly, the image of Figure 1H corresponds to the original in a general way because it is darkest where the dark elements are concentrated and lightest where the light elements are concentrated. The scanning pattern of Figure 1G reduces the thirty original vertical elements of the scene to eleven. In Figure 1H, adjacent lines 5 and 6 have identical shading and appear as a single element to reduce the total of the reproduced image to ten vertical elements.

Due to this action, it has been found that the average maximum number of reproduced vertical elements is equal to about 80% of the total number of scanning lines. Thus, in a system with 500 scanning lines, the maximum number of reproduced vertical elements is 80% of 500, or 400.

PICTURE ELEMENTS

In a television image, the total elements are equal to the number of reproduced vertical elements multiplied by the number of horizontal elements in each scanning line. It may be well to point out at this time, that since the scanning spot moves across the image at a uniform speed, there is no definite width or number of horizontal elements as explained for the vertical elements, the minimum vertical height of which is determined by the width of the scanning lines.

However, to compare the relative vertical and horizontal detail or definition in the reproduced images, it is convenient to think of the scanning lines of the reproduced image on the receiver screen as being divided into horizontal elements. Then the number of these assumed horizontal elements is a direct indication of the frequency response of the equipment. The larger the number of elements observed in the reproduced image, the higher the frequency response of the system.

Square elements with equal horizontal and vertical spacing are shown in Figure 2A, and, since in this drawing only 18 scanning lines are shown, 18 is the theoretical maximum number of vertical elements that can be produced. However, as mentioned above, the number of vertical elements actually produced is only eighty per cent of the number of lines used. Therefore, for this example, the number of vertical elements is equal to 80% of 18, or approximately 14½.

One of the main requirements of the television receiver is to produce a consistently good picture. Pictured is a large screen console type receiver.
Courtesy The Magnavox Co.

The number of horizontal elements that it is possible to reproduce is not limited by the number of scanning lines, but only by the frequency response characteristics of the equipment. The height of the standard scanning pattern, or picture area, is equal to three fourths its width, and assuming the frequency response of the equipment to be adequate, 4/3 as many square picture elements may be produced in the horizontal direction as is theoretically possible in the vertical direction. That is, for this example, the possible number of elements per line is equal to 4/3×18, or 24.

Thus, the total number of elements actually produced in the entire pattern of Figure 2A is equal to 14½ (vertical elements) × 24 (horizontal elements), or 348. Proceeding in the same way for a 500 line picture, the actual number of vertical elements is 80% of 500, or 400, which multiplied by the number of horizontal elements, 4/3× 500=667, gives a total of 400×667 =266,800 elements per image.

Although it is possible to operate so that the reproduced elementary areas are as wide as they are high, equal horizontal and vertical spacing, actually the picture is improved if their horizontal dimension is reduced, thus allowing a greater number of elements per line and a greater total number of elements per image. If the frequency response of the pickup-transmission-reproduction system is extended, it is possible to have more elements per scanning line than are needed for equal horizontal-vertical spacing. This condition is shown in Figure 2B which has 18 scanning lines, as in Figure 2A, but the number of elements per line has been increased to 36 so that the individual elements are only two-thirds as wide as those in Figure 2A.

In Figure 2B, with 36 per line, the total number of elements per image is equal to 36×(80% of 18) =36×14½ =522. If the horizontal elements in a 500 line pattern were increased to the same extent as in the example of Figure 2B, the number per line would be 1.5×500= 750. The total elements produced per picture would be 750×(80% of 500)=750×400=300,000.

In some television receivers, especially those with smaller screens, the horizontal definition may not exceed the equivalent of 400 horizontal elements per line. Also, for simplicity in the explanations, 500 scanning lines have been assumed, but in practice, the actual number is about 485. On this basis, the number of vertical elements will be equal to 80% of 485=388 which, multiplied by 400, gives a total of 155,200 elements for a complete image or frame.

When it is remembered that, within certain limits, picture quality increases with the number of elements, in this way the quality of television pictures can be compared with that found in motion picture films. In 16 mm film there are about 125,000 picture elements per frame, and in 35 mm film about 500,000 elements per frame.

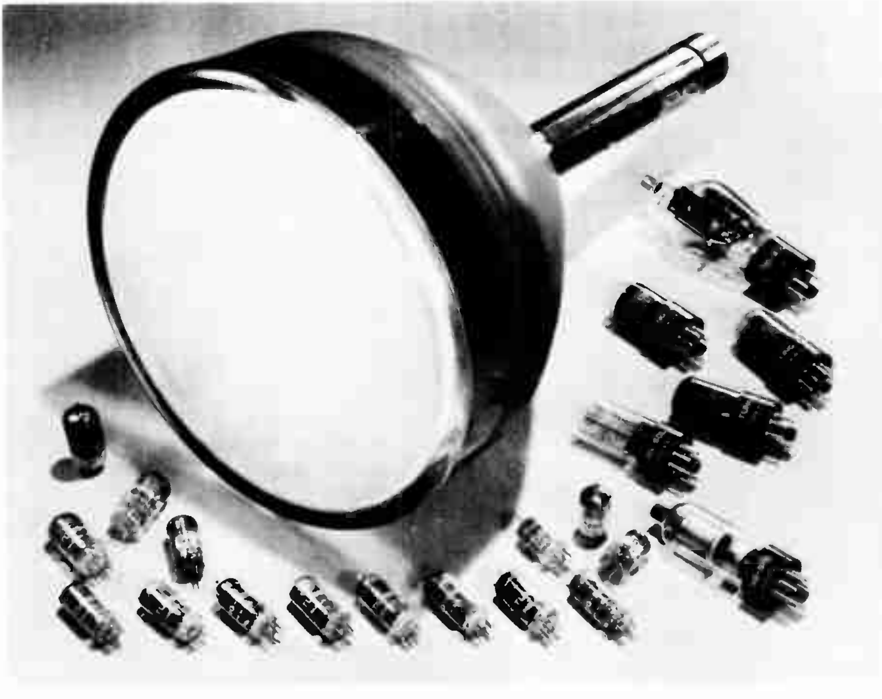

These tubes are required in a typical television receiver.

Courtesy Tung-Sol Electric Inc.

PICTURE TRANSMISSION RATE

To reduce flicker, sound movies are projected on the screen at the rate of 24 frames per second and, for satisfactory viewing, television images must be projected at this rate, at least. In the present television systems, which operate at the rate of 30 images or frames per second, the scanning spots, or electron beams of the camera and picture tubes scan the entire image twice during the transmission of each single picture. That is, to transmit 30 frames per second, the image must be scanned 60 times per second.

This method of scanning will be explained in greater detail later, but is mentioned here because it is the reason that the deflection voltage generators, which control the vertical movement of the beam, must operate at a frequency of 60 cycles per second. This scanning frequency has been chosen to correspond to the power line frequency used in most parts of the United States so that the small amount of 60 or 120 cycle ripple, which usually remains in the output of the power supply in spite of good filters, will not produce a moving pattern on the receiver screen.

A television antenna of the indoor type must be used where outdoor antennas are not expedient.
Courtesy Tricraft Products Co.

Any interference, such as "static" or hum, will cause variations of light to appear on the screens of television receivers, but, with a scanning frequency of 60, any variation of light caused by hum voltage will occur at the fundamental or harmonic of the scanning frequency and remain stationary on the screen. With fractional differences between scanning and hum frequencies, variations of light, caused by hum, will produce a moving pattern which is much more noticeable and objectionable.

VIEWING DISTANCE

In order to determine the most satisfactory viewing distance of a receiver screen, it is important to consider the characteristics of the human eye. A theoretical approach to this problem may be made from the standpoint of the "acuity of vision" which is the ability of the eye to distinguish details, or objects, of small dimensions.

To illustrate this characteristic, Figure 3A consists of two heavy black horizontal lines separated by a thin white line, each of which can be considered as an element of a scene. At ordinary reading distance, the white line can be seen, but by increasing the distance between the lines and your eye, the white line becomes harder and harder to see until, at a distance of ten or twelve feet, the separation between the two black lines is no longer visible and they apparently merge into one heavy line. Therefore, at a given distance, there is a limit to the detail, or size of small images, that the human eye can distinguish.

To illustrate this action further, in Figure 3B, let "h" represent the height of a small object or picture detail. Then, for normal vision, the greatest distance, d, at which the eye is able to "see" the object, is that distance at which the angle Θ is equal to about one minute of arc, or one sixtieth of one degree. Stating this fact in another way, the least height, "h," which an object can have and still be seen by the normal eye, at a given distance, d, is that height at which the angle Θ is equal to about one minute of arc.

Persons of more acute vision are able to distinguish objects when the angle Θ is only ½ minute, while persons with less acute vision may not be able to resolve objects unless the angle Θ is equal to 2 minutes or more.

If the height of the object is increased to that of line "h_1", then without changing the angle, the distance may be increased to d_1, as shown. On the other hand, if the distance is increased to d_1, the smallest height a visible object can have is the dimension h_1.

Expressed mathematically:

$$\tan \Theta = \frac{h}{d} = \frac{h_1}{d_1} = \text{etc.}$$

when "h" and "d" are measured in the same units such as inches or feet. This equation shows that the ratio of the object height to the viewing distance is a constant value.

In television, it is usually more convenient to measure the height, "h" in inches and the distance "d" in feet, therefore, the equation can be changed to:

$$\tan \Theta = \frac{h \text{ (inches)}}{12d \text{ (feet)}}$$

and transposing terms:

$$d \text{ (feet)} = \frac{h \text{ (inches)}}{12 \tan \Theta}.$$

Trigonometric tables give values for the tan Θ as:

$$\tan \tfrac{1}{2}' = .000145$$
$$\tan 1' = .00029$$
$$\tan 2' = .00058$$

and by substituting the desired value of tan Θ together with various values of element heights, the equation can be used to calculate the corresponding viewing distances.

Following this plan for different angles and heights, sufficient values have been calculated to plot the curves of Figure 3C. If the size of the smallest details which a particular system can produce is known, these curves can be used to find the maximum distance from the screen at which an observer will be able to see the smallest picture details.

It has been explained that, theoretically, the smallest picture details which can be produced are equal in height to the width of one scanning line. As an example, suppose that on the face of a twenty-one inch picture tube, the viewing area of 485 lines is 14 inches in height. The width of one line and therefore, the height of the smallest possible reproduced picture element is $14 \div 485 = .029$ inch. According to the "$\theta = 1'$" curve of Figure 3C, the maximum distance at which a viewer with normal vision can be from the screen and still see the smallest picture detail, is about 8⅓ feet.

A complete studio and transmitter. Mobile television units are used to cover sport events, parades, and other news events for transmission to television audiences.

Courtesy General Electric Co.

So far, the explanations hold true if the images are perfectly stationary and the scanning beam traces have uniform distribution of light across their width. In practice, neither of these conditions are completely true, therefore, the actual ability of the eye to distinguish picture elements is less than that indicated by the above example which represents the best possible case.

With movement occurring in the scene, the resolving power of the normal eye is such that the angle θ, produced by the smallest visible detail, is equal to about 2 minutes. This represents an intermediate condition, and in worse cases, the angle θ may be equal to as much as 5 minutes or more. According to curve $\theta = 2'$, Figure 3C, a picture detail of .029 inch, as assumed in the former example, must be viewed from a distance not greater than about 4¼ feet in order to be seen. However, 4¼ feet, or 51 inches, is only 3.6 times the 14 inch height of the picture.

Experience with television and movie audiences has shown that watching the picture from a distance less than 4 or 5 times its height causes tiring of the viewer's eyes, because, at close range, the eye must move excessively to cover the picture area. This movement of the eye is necessary because only the region at the center of the retina is capable of distinguishing details to the extent indicated in the graphs of Figure 3C. Therefore, in order to "see" details over the entire picture area, the eye muscles must be in action constantly so that all the regions of the picture area may affect this sensitive center portion of the retina.

Experience shows also that freedom from strain of eye muscles is more important than the ability to see the tiniest picture details, therefore, a viewing distance somewhat greater than that which allows maximum discernment of picture elements is desirable. On the other hand, if the viewing distance is too great, the picture occupies an extremely small field of view, and again considerable eyestrain is produced.

Experiments with various audiences has indicated that the optimum viewing distance ranges from about 4 to 10 times the picture height. The distance of 8⅓ feet for a .029 inch minimum detail in an image 14 inches in height, as indicated by the curve $\theta = 1'$, in Figure 3C, gives a d/h ratio of 100 inches to 14 inches, or $100/14 = 7.1$, which falls midway between the limits of 4 and 10. Therefore, although incorrect from the theoretical point of view of visual acuity (when moving images are assumed) the curves of Figure 3C are still useful for the determination of approximate viewing distances because of the modifying consideration of eyestrain.

BANDWIDTH REQUIREMENTS

Like radio transmission, when the television video carrier is modulated, sidebands are produced and those farthest removed from the carrier correspond to the highest modulation frequency. The maximum number of picture elements transmitted by the television system result in video frequencies as high as 4 megacycles. Thus, if the various v-f voltages are sine wave in shape, the sidebands produced by modulation of the carrier cover a frequency range up to 4 mc above and below the carrier frequency.

However, in the actual transmission of picture information, the various r-f voltages involved may have a large variety of wave-forms. In Figure 4, for example, if the black and white vertical bars are a part of the transmitted scene, there are abrupt changes from white to black and black to white as the scanning beam moves across them. These sudden changes with uniform color in between will produce a square wave voltage like that drawn below the bars. Notice here, each pair of bars, one white and one black, produces one complete square wave cycle.

All radio and television circuits are composed of various combinations of resistance, inductance, and capacitance or their equivalents and, with the application of some definite voltage, the resulting current is determined by the impedance of the circuit components and by their manner of connection. Also, in the case of capacitive and inductive components, the effective impedance depends upon the frequency of the alternating current. In addition, the inductance or capacitance in a circuit will change the wave-form of all except sine wave currents. For this reason, a-c circuit theory is often based on sine wave currents and voltages.

Then, in order to study the action of other wave-forms in circuits of this type, it is customary to consider the applied voltage as consisting of a combination of various frequency sine waves which, when added, produce an equivalent wave-form.

By means of a mathematical process known as "Fourier Analysis," it has been shown that a square wave, such as that in Figure 4, is equivalent to a sine wave of fundamental frequency equal to that of the square wave, plus an infinite number of odd harmonics. For example, sine waves of 40 cps, 120 cps, 200 cps, 360 cps, 440 cps, etc. indefinitely, if added in proper phase and relative amplitudes, are the equivalent of a square wave of 40 cps.

The bandpass response of a given circuit is the frequency range over which the circuit provides essentially uniform response. However, this definition assumes that the applied voltages are sine waves and, in order for a circuit to transmit a voltage square wave with absolutely no distortion, it would be necessary to extend the upper frequency limit of its bandpass to infinity. Of course, this is impossible from a practical standpoint, but it has been found that television circuits which pass frequencies as high as the thirteenth harmonic of a given square wave permit the reproduction of sufficiently sharp edges on black or white objects in the image.

In the event the vertical bars of Figure 4 were each equal to the width of one picture element, then, with 450 elements per scanning line, 500 scanning lines per frame and a frame transmission rate of 30 per second, the total number of picture elements transmitted in one second is 450×500×30 or 6,750,000. Assuming two picture elements correspond to one electric cycle, the fundamental frequency of the square wave voltage produced would be 6,750,000/2 or approximately 3.4 mc and the thirteenth harmonic would be equal to 13×3.4 or 44.2 mc. Thus, to reproduce these bars with sharp edges, the television transmitter and receiver circuits would have to pass a frequency band up to 44.2 mc.

However, on the screen of a 16 inch picture tube, the horizontal dimension of the scanned area or raster is approximately 13½ inches so that with 450 elements per line each one has a width of only 0.03 inch. Assuming the acuity of the observer's eye is equal to from 1′ to 2′ of arc, with a viewing distance of 7 times the picture height of 10 inches, or 70 inches, the smallest discernible detail will be about from 0.02 to 0.04 inch wide.

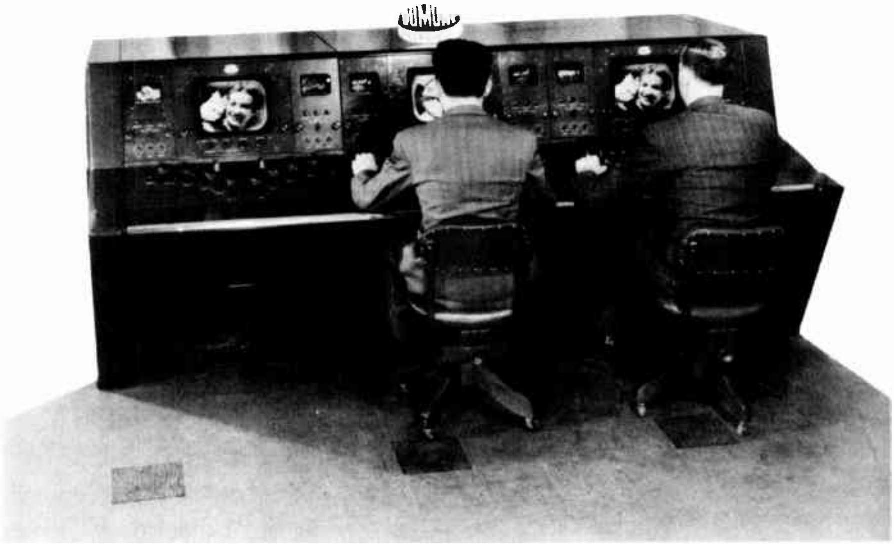

To provide a consistently good picture for transmission, each camera picture is monitored by engineers at all times.

Courtesy Allen B. DuMont Labs. Inc.

Thus, with the bars of Figure 4 equal in width to one element, it is just barely possible to see them, and an observer is not able to tell whether or not the edges are sharp. Therefore, in this case, the harmonics are not necessary and instead, a sine wave at the fundamental frequency is transmitted. Having the same frequency as the square wave of Figure 4, this sine wave is illustrated in Figure 5 together with the resulting image which is produced on the receiver screen. As seen here, no well-defined edges actually exist in the reproduced image as the changes from black to white and from white to black are quite gradual.

However, Figure 5 shows that it is possible to produce a change from white to black, or vice versa, in the space of one picture element. Therefore, with vertical bars 15 to 20 times as wide as one element, the ratio of the bar width to that of the transition space is sufficiently high to produce the appearance of sharp edges.

If the widths of the vertical bars of Figure 4 were each equal to that of 15 picture elements, then, with 450 elements per scanning line, there would be 30 bars in the Figure and the ratio of bar width to transition space would be very high. Transmitted at the rate of 500 lines per frame and 30 frames per second, the 30 bar image would produce a voltage square wave having a fundamental frequency of 225,000 cycles per second. To reproduce the vertical bars with reasonably sharp edges requires frequencies as high as the thirteenth harmonic of the fundamental and therefore, the transmitter and receiver circuits must be capable of passing a frequency band up to 13 × 225,000 or 2,925,000 cycles (2.925 mc).

To illustrate this action in greater detail, in Figure 6A a wave-form containing the fundamental and odd harmonics up to the 13th is superimposed on a square wave of the same fundamental frequency. Note that the resultant wave, which was produced by combining the fundamental, 3rd, 5th, 7th, 9th, 11th, and 13th harmonics, very closely approximates the shape of the ideal square wave.

In Figure 6B, a similar wave containing the odd harmonics up to the 21st is superimposed upon a square wave of the same fundamental frequency. Note that this wave approximates the ideal square wave-form even more closely than that of Figure 6A. The 21st harmonic of 225,000 cps is equal to 21 × 225,000 = 4,725,000 cps. Therefore, to transmit the wave of Figure 6B, the circuits require a pass bandwidth with an upper limit of about 4.7 mc. Usually the television studio equipment is designed to handle a maximum video frequency of 6 mc or higher, but as the signal passes through the transmitter, the sidebands are restricted so that frequencies no higher than 4 mc can be transmitted.

Therefore, 4 mc is the theoretical maximum frequency for which the receiver circuits need be designed. However, in many practical cases, the receiver circuits cause further attenuation of the higher frequencies, so that a maximum video frequency of about 3.5 mc is usual when the video signal finally arrives at the control grid of the picture tube. Note that this value is adequate to pass a sufficient number of harmonics for the reproduction of sharp edges on large objects, such as explained for the vertical black and white lines of Figure 4.

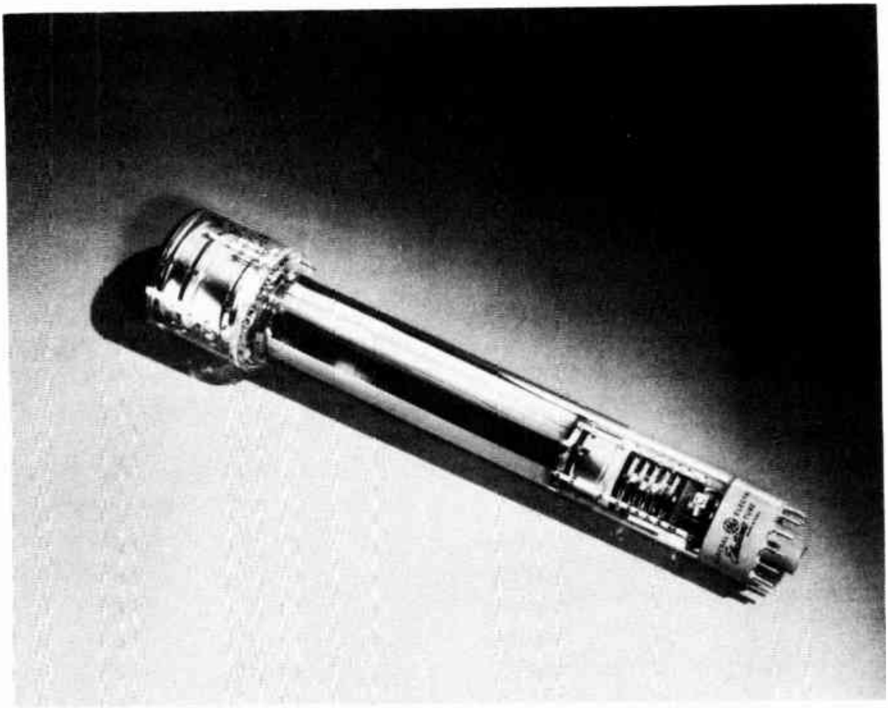

The image orthicon camera tube. The sensitivity of this tube is increased by employing electron multipliers shown near the base of the tube.

Courtesy General Electric Co.

A comparison of the reproduced wave of Figure 6B with that of Figure 6A shows that the larger the number of harmonics included, the flatter the top of the wave becomes, while reference to Figures 4 and 5 shows that the flatter the top of the wave, the more uniform the shading of the various black and white lines. Summarizing the over-all action, the higher the maximum video frequency of the television system: (1) the finer the degree of the reproduced detail, (2) the sharper the edges of the larger objects in the image, and (3) the more uniform the tone of these larger objects.

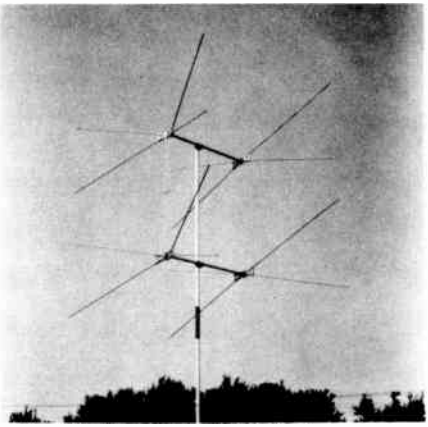

In order to receive a satisfactory signal in "fringe" areas a good outdoor antenna is needed.

Courtesy Telrex, Inc.

VESTIGIAL SIDEBAND TRANSMISSION

When both the upper and lower sidebands are transmitted with the carrier, as in AM radio broadcasting, the total bandwidth required by any one station is equal to twice the highest modulation frequency. With this method, the bandwidth required by a television station picture transmitter employing a maximum modulation frequency of 4 mc is a minimum of 8 mc, as shown in Figure 7A. Here, f_c represents the carrier frequency, the lower sideband extends down to f_1 which is equal to $f_c - 4$ mc, and the upper sideband extends up to f_2 which is equal to $f_c + 4$ mc.

For commercial television, the FCC has allocated 6 mc channels each of which must accommodate both the picture and sound carriers, with their respective sidebands. Using double-sideband transmission and allowing space for the sound signals also, to operate within a 6 mc channel, a television station would have to limit the maximum modulation frequency to less than 3 mc. Rather than operate in this manner and transmit picture signals of reduced quality, it has become standard practice to transmit the entire upper sideband but only a part of the lower sideband, as shown in Figure 7B. This arrangement, known as vestigial sideband transmission, allows the use of a maximum modulation frequency of 4 mc and at the same time leaves space for the sound signals (not shown) in a 6 mc channel.

Attenuation of the lower sideband may be accomplished by means of a high-pass filter located between the transmitter and the radiating antenna, as shown in Figure 8. Referring to Figure 7B, this filter passes all frequencies higher than about $f_c - 1$ mc and attenuates all lower than this value.

Although minimum channel width would be realized by attenuating the entire lower sideband — all frequencies lower than f_c — in practice, this action produces phase distortion in the reproduced image.

Therefore a part of the lower sideband must be retained to avoid this distortion.

CHANNEL ARRANGEMENTS

With a 6 mc channel width there are a number of possible arrangements of sound carrier and picture carrier with space on each side to act as a guard band. Using but one sideband of the video transmission; (1) the sound carrier might be placed either higher or lower in frequency than the picture carrier, (2) the sound carrier might be placed close to the picture carrier with the attenuated picture sideband between them, or (3) the carriers might have wider spacing with the unattenuated sideband between them.

The arrangement which is employed in television broadcasting in the U.S.A. is illustrated in Figure 9. The horizontal base line, drawn to a length which represents the 6 mc width of one channel, is marked in 1 mc divisions. At the extreme left, point 0 represents the lower frequency limit of the channel, while point 6, at the extreme right, represents the upper frequency limit. The vertical dimension indicates the amplitude of the modulating signals relative to that of the r-f carrier signal.

The picture carrier is located 1.25 mc above the lower frequency limit and the sound carrier is located 0.25 mc below the upper limit of the channel. Therefore, as indicated, the sound carrier is exactly 4.5 mc higher in frequency than the picture carrier. The video sidebands have uniform amplitude from 0.75 mc below the picture carrier to 4 mc above it, and are then attenuated sharply so as not to cause interference with the sound signals or an adjacent channel. Except for the comparatively small space occupied by the sound sidebands, the 0.25 mc region between the sound carrier and the upper limit of the channel acts as a guard band to prevent interference between adjacent channels.

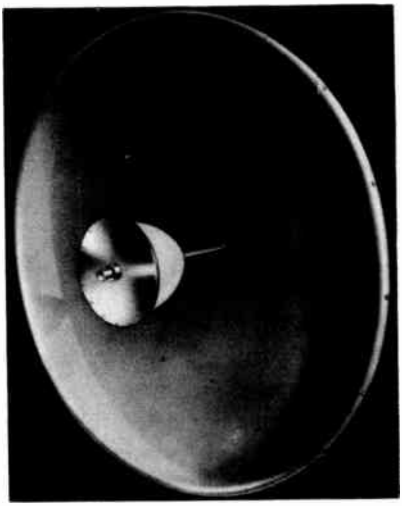

A microwave antenna designed to operate at 940 mc. The parabolic reflector beams the signal from one relay tower to the next.

Courtesy Workshop Associates
Div. of the Gabriel Co.

A channel arrangement using double-sideband video transmission is shown in the simplified sketch of Figure 10A and although the channel width is 6 mc, the highest possible video modulation signal is only 2.25 mc. For comparison, Figure 9 is simplified in Figure 10B, where the possible increase of video modulation frequency to 4 mc is readily apparent.

Two other possible dispositions of the carriers and sidebands are shown in Figures 10C and 10D. In Figure 10C, the sound carrier is near the lower end of the channel with the picture carrier 1.25 mc higher and the attenuated lower video sideband between them. In Figure 10D, the sound carrier is near the upper end of the channel with the picture 1.25 mc lower and the attenuated upper video sideband between them. As shown, both have the advantage of an increase in possible video modulation frequency to 4.25 mc. However, in both cases, the sound and picture carriers themselves are separated by only 1.25 mc. This narrow spacing of the carriers allows them to produce a beat note of 1.25 mc which, being within the band passed by the video amplifier of the receiver, produces an interference pattern on the picture tube screen. With the wide spacing of the carriers of Figure 9 and Figure 10B, the carrier beat note has a frequency of 4.5 mc which falls outside of the normal video band and thus does not interfere with the picture.

Although not illustrated, a fourth possible arrangement is to locate the sound carrier at the lower end of the channel with the picture carrier 4.5 mc higher and the unattenuated lower video sideband between them. This system would provide 4.5 mc spacing of the carriers, but since it has no advantages over that of Figure 9, which has been used by many existing transmitters, the latter was selected by the committee on television standards as the best choice and later adopted by the FCC.

* * *

STUDENT NOTES

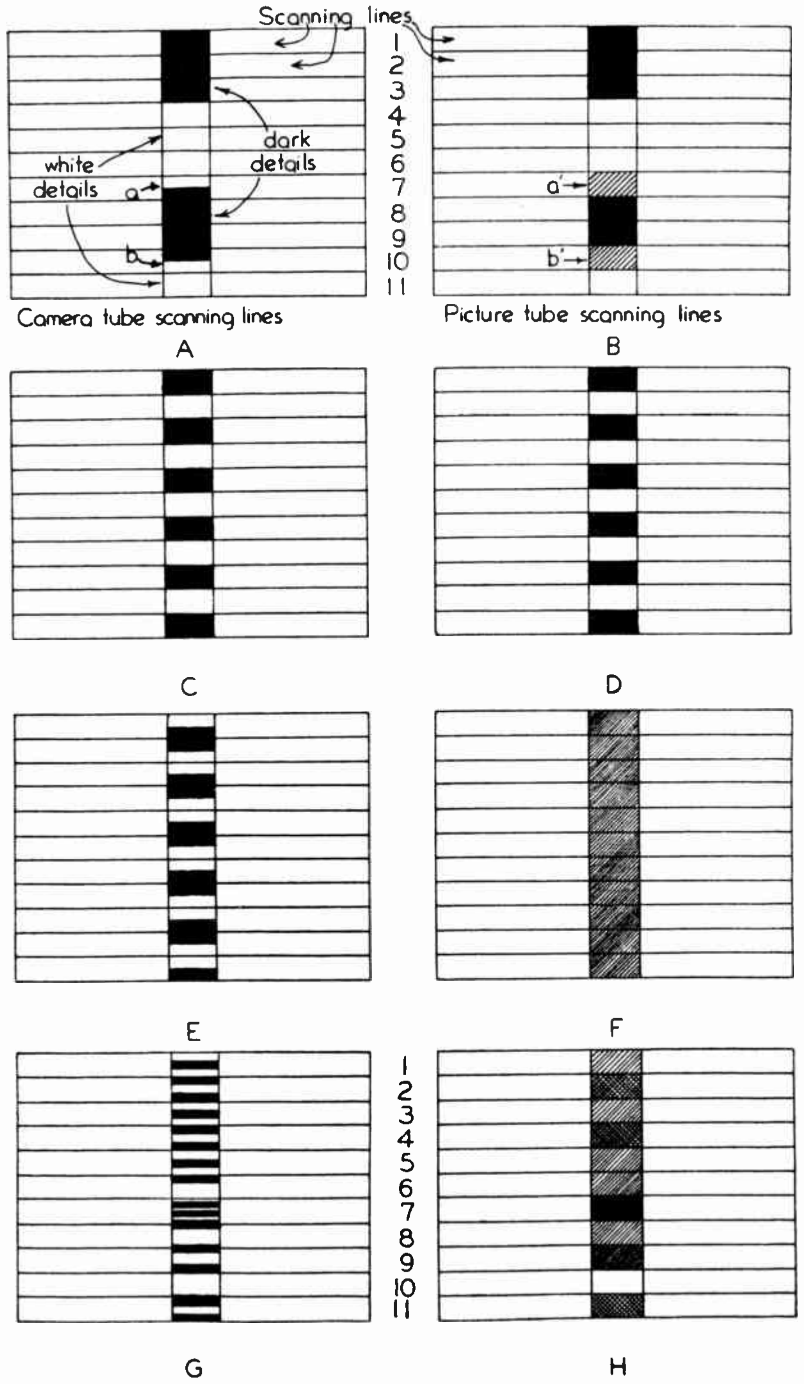

FIGURE 1

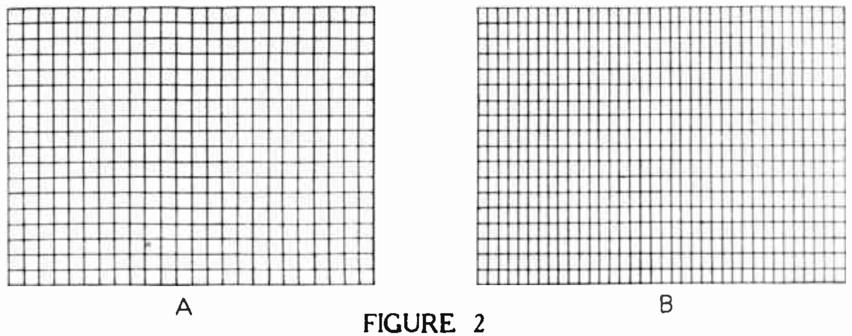

FIGURE 2

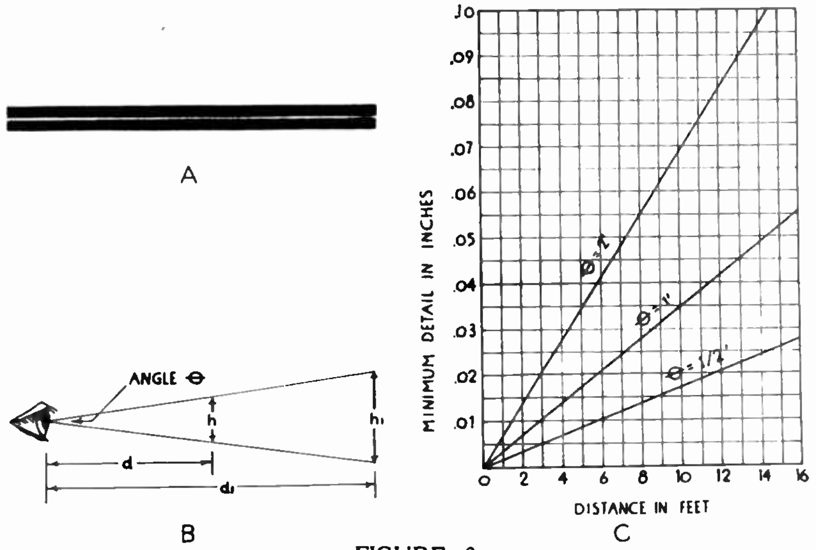

FIGURE 3

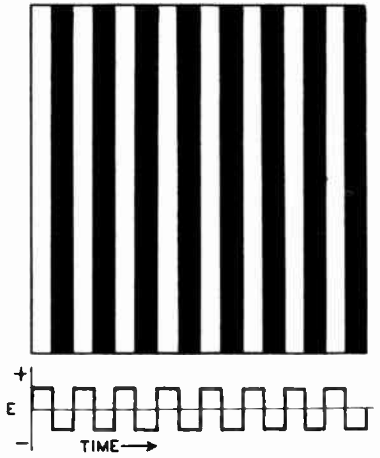

FIGURE 4

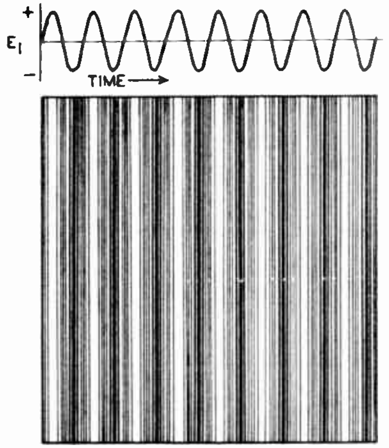

FIGURE 5

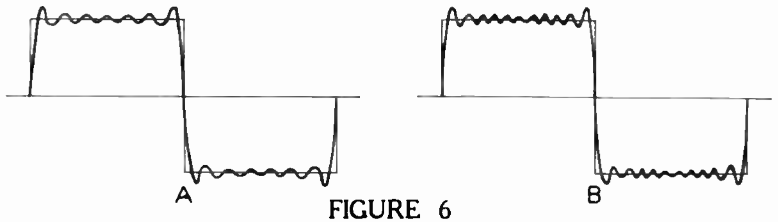

FIGURE 6

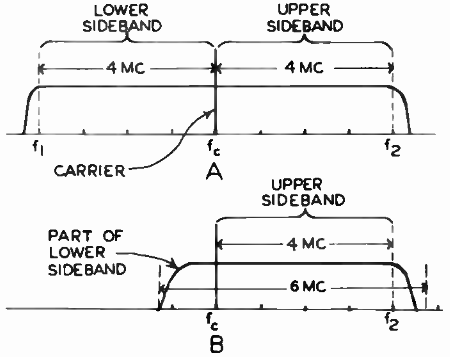

FIGURE 7

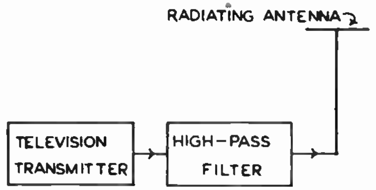

FIGURE 8

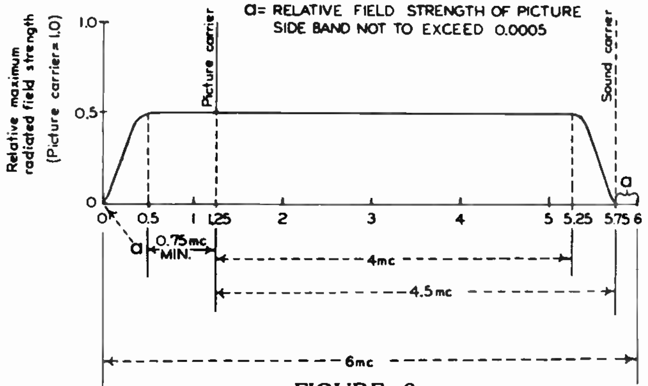

FIGURE 9

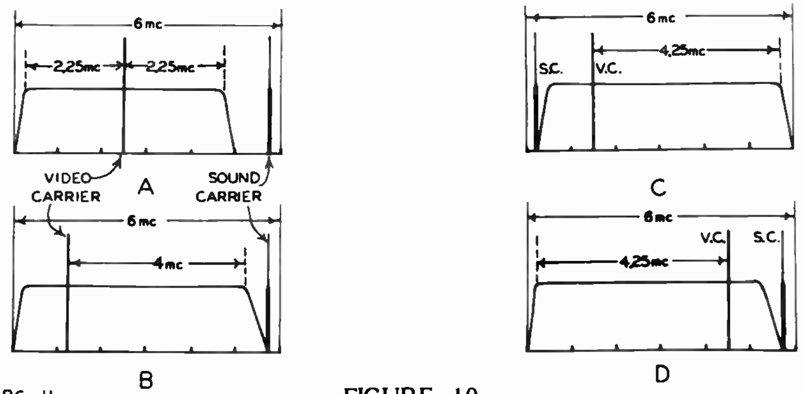

FIGURE 10

QUESTIONS

3

How many advance Lessons have you now on hand?..................................

Print or use Rubber Stamp.

Name.. Student No......................................

Street..Zone......................... Grade...............................

City...State................................ Instructor.........................

Write your answers on the "Ans." line below each question. If more space is needed use reverse side of this page.

1. **Do relatively large or small objects produce the greatest fuzzy or out-of-focus appearance?**

Ans...

2. **As explained for possible conditions of Fig. 1, what percentage (approx.) of the total number of scanning lines provides the maximum number of reproduced vertical elements?**

Ans...

3. **What limits the number of horizontal elements that can be reproduced?**

Ans...

4. **Assume a standard scanning pattern similar to that of Figure 2 has been developed: (a) On the basis of 485 scanning lines and 350 elements per line, what is the total number of elements actually reproduced? (b) How does the "quality" of the assumed image compare with the detail of a 16 mm film?**

Ans...

5. **What is meant by the acuity of vision?**

Ans...

6. **In relation to the picture height, what is the optimum viewing distance?**

Ans...

7. **What is meant by "bandpass response" of a given circuit?**

Ans...

8. **What are three advantages of employing high video frequencies in a television system?**

Ans...

9. **Why is "vestigial sideband transmission" employed in present day television practice?**

Ans...

10. **What is the purpose of a guard band?**

Ans...

FROM OUR *Director's* NOTEBOOK

BREVITY

Years ago I reached the conclusion that Everybody Talks Too Much, and every day that passes finds me more strongly confirmed in that belief.

We talk too much about our neighbors and we talk too much about ourselves. We talk too much about our accomplishments—our plans—and about nothing at all.

In talking too much, we Promise too much, Complain too much, Ask too much, Tell too much, Imply too much—and by so doing, get ourselves Involved too much.

We waste too much time in talking and we accomplish too little in the scant time for speechless effort.

Brevity is more than "the soul of wit"—it is a praise-worthy Virtue, greatly to be desired.

We can exhaust our knowledge of most subjects in a surprisingly small amount of conversation. Beyond that point we are forced to talk about what we merely suspect or to cease talking.

The essence of wisdom is to be Brief and/or then Silent.

Yours for success,

W. C. DeVry

DIRECTOR

PRINTED IN U.S.A.

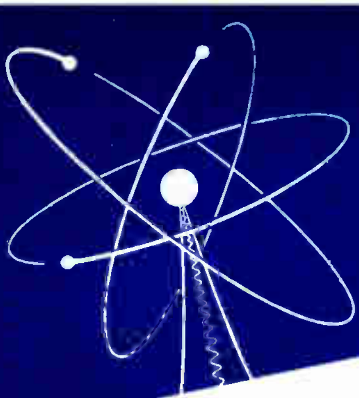

TELEVISION STANDARDS

Lesson TPC-12B

12

DeVRY Technical Institute

4141 W. Belmont Ave., Chicago 41, Illinois

Formerly DeFOREST'S TRAINING, INC.

TPC-12B

FCC TELEVISION STANDARDS

ELECTRONICS TELEVISION
DTI
DeVRY Technical Institute

4141 Belmont Ave.
Chicago 41, Illinois

The mobile television unit, a complete studio on wheels, is used to pick up field events and relay the program to the main studio.

Courtesy Federal Telecommunication Labs., Inc.

Television

FCC TELEVISION STANDARDS

Contents

It is not the going out of port, but the coming in, that determines the success of a voyage.

—Henry Ward Beecher

FCC TELEVISION STANDARDS

Standardization of the television system is necessary in order to provide for reception of the image sent from any transmitter by any receiver within range. Produced by different manufacturers, all television transmitters and receivers must operate with the same scanning process, the same number of pictures per second, the same number of scanning lines per picture, etc., etc. Until these important items were agreed upon by the members of the industry, the FCC could not permit television broadcasting on a commercial basis.

In 1940, a group of engineers and other qualified persons, called the National Television System Committee (NTSC), formulated a set of television standards suitable for a national system of television broadcasting. Officially adopted by the FCC, the "National Television System Standards" went into effect allowing commercial monochrome television broadcasting on and after July 1, 1941. More recently NTSC has formulated a color system. Adopted by FCC on December 17, 1953 this system provides the standards for all color television broadcasts.

Most of the following standards apply to color as well as to monochrome or black-and-white television broadcasting. In addition, those standards that apply only to color broadcasting are included under the heading of Color Standards.

Although some of the standards are practically self-explanatory, others require a certain amount of interpretation. This is given in the paragraphs following the official wording of each standard.

Depending upon their applications, the monochrome standards are divided into the following group headings: (1) the television channel, (2) scanning specifications, (3) picture signal modulation, (4) sound signal modulation, (5) synchronizing signals, and (6) transmitter ratings.

THE TELEVISION CHANNEL

The width of the standard television broadcast channel shall be six megacycles per second.

Because of the large number of elements required to transmit images with a reasonable amount of detail, the video frequencies produced may be as high as four megacycles, thereby developing sidebands 4 mc removed from the video carrier signal. To allow room for the transmission of all of at least one of these sidebands (upper or lower), and for the accompanying sound carrier with its sidebands, plus guard bands to prevent interference with adjacent channels, a channel width of 6 mc was adopted.

The visual carrier shall be normally 1.25 mc above the lower boundary of the channel.

The reason for the arrangement and location of the picture and sound signals in the television channel have been explained previously and, for convenience, the diagram showing this arrangement has been redrawn for Figure 1 of this lesson.

The aural center frequency shall be 4.5 mc higher than the visual carrier frequency.

This location of the sound carrier, 4.5 mc above the visual carrier or 250 kc below the upper limit of the channel, is shown in Figure 1. With a maximum 75 kc deviation of the FM sound carrier, this arrangement allows a space of 250 –75 or 175 kc, between the highest sound modulation sideband and the top limit of the channel. Thus, there is a guard band of 175 kc between the signals of adjacent channels. Present day transmitting equipment often does not take full advantage of the allowable sound carrier deviation of 75 kc, a value of 25 kc being commonly used. Under these circumstances, the width of the guard band is 250 –25 or 225 kc.

The visual transmission amplitude characteristic shall be in accordance with the Chart designated as Appendix III. Figure 3.

The "Figure 3" referred to in this standard is the drawing shown as Figure 1 of this lesson. With the picture carrier located at 1.25 mc above the lower limit of the channel, its unattenuated upper sideband extends flat up to 4 mc above the carrier. After the 5.25 mc point, the signal is sharply attenuated so that, at the frequency of the sound carrier, the video signal is only 0.05% of the maximum carrier field strength. The lower video sideband extends flat down to at least 0.75 mc below the carrier and then is sharply attenuated so that, at the lower limit of the channel, its amplitude is only 0.05% of the maximum carrier strength. This method of transmission is known commonly as vestigial sideband transmission.

The respective carrier locations are the same in all of the television channels and thus, Figure 1 may represent any one of them. For example, in the 60 or 66 mc channel, the picture carrier, spaced 1.25 mc above the lower limit has a frequency of 61.25 mc and the sound carrier 4.5 mc higher, has a frequency of 65.75 mc. Checking these values, it will be found that, as in Figure 1, the sound carrier is 0.25 mc below the 66 mc upper frequency limit of the channel. As another example, in the 66 mc to 72 mc channel, the picture carrier is located at 67.25 mc and the sound carrier at 71.75 mc.

SCANNING SPECIFICATIONS

For monochrome and color transmissions the number of scanning lines per frame shall be 525, interlaced two to one in successive fields.

Before considering the choice of the number of lines, the term INTERLACE should be explained. Mention of this subject has been made although, so far, the explanations have been on the basis of non-interlaced scanning.

A large screen, floor model monochrome television receiver. Standardization of the television broadcast signals assures good picture quality.

Courtesy Admiral Corp.

When non-interlaced linear scanning is employed, the path followed by the cathode ray tube beam is illustrated in Figure 2, where, to simplify the explanation, only a few widely spaced lines are drawn. During the relatively slow scanning period from left to right, the path of the spot is shown by the heavy slanted lines, while during the rapid retrace periods from right to left, the path is indicated by the light, almost horizontal lines. The vertical retrace path is shown by the dashed line between the lower right-hand and upper left-hand corners.

The wide spacing of the heavy lines shows that the spot moves downward at the same time that it is moving from side to side. Compared to the left-to-right movement, the horizontal return period of the spot is of very short duration, therefore, very little vertical distance is covered, as indicated by the almost horizontal direction of the light retrace lines.

To prevent dark spaces between the scanning pattern lines, they should be adjacent or touch as shown in Figure 3. Although this requirement is not adhered to in practice, we will assume here that there are no spaces between the lines and they do not overlap. For the lines to be adjacent, the scanning spot must move downward a distance equal to its diameter during each complete left-to-right-and-back motion.

To illustrate this condition, in Figure 3, the scanning spot is greatly enlarged in diameter in comparison with the size of the screen. With no vertical deflection, the spot would travel straight across the screen from position A to A′, as indicated by the dotted lines. However, with the right vertical movement, the spot actually follows the path from position A to position B, as indicated by the solid lines. From position B, the spot snaps back quickly to position C at the left side of the screen and then scans diagonally across to position D.

With the respective deflection voltages adjusted to the correct frequencies, during the horizontal scanning of each line, the spot will move downward a distance equal to its diameter. As shown in Figure 3, lines A to B and C to D are immediately adjacent to each other with no spaces between them. On arriving at the bottom of the screen, the spot moves over and up to the upper left-hand corner, where, to provide simple, non-interlaced scanning, it begins tracing again the path illustrated in Figure 2.

Somewhat like motion pictures, to produce the illusion of motion, successive images must be scanned rapidly on the screen of the television picture tube. Therefore, each elementary area of the screen glows for but a very short interval after the scanning beam passes over it. Because of this action, with the scanning pattern of Figure 2, the upper lines are losing their brilliance by the time the scanning spot reaches the lower lines of the image. This periodic change of brilliance produces an annoying flicker similar to that found in old time movies.

To reduce this flicker, the vertical speed of the scanning spot is doubled so that, in Figure 3, adjacent lines will be separated by a distance equal to their width. In effect, the spot scans every second line of the image in one half of the former time to produce what is known as a FIELD. Then it returns to the top and, still traveling down at double speed, it scans the lines that were omitted in the first field. Thus, the lines of the fields are interlaced and two fields complete one image or FRAME.

A simplified sketch of the interlaced scanning path is shown in Figure 4. Here, as in Figure 3, the spot is drawn with a greatly exaggerated diameter. Various positions of the spot are indicated by the circles marked 1, 15, 3, etc., at the left and 14, 2, 16, etc., at the right, while the scanning lines are numbered in sequence from top to bottom along each edge of the screen. The shaded "T" areas are the parts of the screen not covered by the scanning spot.

Starting at position (1) in the upper left-hand corner, the spot moves to position (2), tracing out the top scanning line number 1. During this left-to-right movement, the spot travels downward also, for a distance equal to twice its diameter. Consequently, after moving rapidly from position 2 to position (3), it is ready to trace scanning line number 3, from position (3) to position (4), having skipped scanning line number 2. After moving to position (5), it scans lines 5, 7, 9, and the first half of 11 in order, having skipped lines 4, 6, 8, and 10.

At the middle of line number 11 (position 12), the spot has reached the bottom of the screen, and is returned suddenly to position (13), at the top, where it completes the tracing of the eleventh scanning line. From position (13) to position (14), the spot moves only halfway across the screen, and travels downward a distance equal only to its diameter. Therefore, returning to the left side of the screen, it arrives in position (15), to begin scanning line number 2.

From position (15) to position (16), the spot traces line number 2 and again moves downward a distance equal to twice its diameter, so that returning to position (17), it is ready to scan line 4. In similar manner, lines 6, 8, and 10 are scanned with lines 3, 5, 7, and 9 being skipped. Reaching the end of line 10, at position (24), the spot is returned to position (1) in the upper left-hand corner of the screen, ready to begin another frame.

In order to trace all of the scanning lines, the spot completes two vertical cycles of movement. Each complete scan of either the odd or the even numbered lines is called a field, and two fields are required to complete one frame. This is what is meant by the wording of standard "—interlaced two to one."

In Figure 4, each field contains 5½ lines, to make a total of 11 lines for the complete frame and, regardless of the total number, the half line is necessary to obtain the interlaced scanning pattern. Therefore, to provide the half line relationship for the fields, there must be an odd number of lines per frame such as the 11 illustrated in the Figure, and the 525 used in actual practice.

With 525 lines per frame, their width is considerably less than that shown in the simplified drawing of Figure 4. Therefore, the distance of vertical travel is so slight that their slant is not apparent. Likewise, the darkened triangular areas, "T," are too small to be noticed on an actual television receiver screen. However, this simplified sketch serves to illustrate basically the method of scanning specified.

The choice of 525 scanning lines per frame, in preference to several other suggested numbers, is based on conclusions derived from a great deal of research. The width of the communication channel is the most basic factor affecting picture quality, and with the video bandwidth set at 4 mc by standard number 4, the highest video modulation frequency and therefore the maximum number of picture elements is defined.

Choosing the desired number of lines per frame then consists of deciding whether there should be fewer lines, each containing many elements, or many lines containing fewer elements. The number of elements per line determines the degree of image detail or quality in the horizontal direction while the number of lines determines the quality in the vertical direction. Thus, the question is mainly that of vertical versus horizontal quality.

Assuming that it takes one electric cycle to produce two image elements, the standard video bandwidth of 4 mc allows the transmission of a theoretical maximum of 8,000,000 elements per second. In practice, this maximum is about 7,500,000 elements and with 30 frames per second, each may contain a maximum of 7,500,000 ÷ 30 or 250,000 elements. For a square image, 500 scanning lines with 500 elements in each would give a total of 500 × 500 or 250,000 elements per frame.

However, since the standardized television frames are wider than they are high, there must be fewer lines than there are elements in each line in order to provide equal horizontal and vertical image detail or quality. Thus, on the basis of equal horizontal and vertical quality, the required number of scanning lines should be somewhere between 400 and 500.

The desired number of lines per image has been determined also in a practical manner by Engstrom. He projected motion pictures through a multiple-lens system of embossed celluloid in such a way that they appeared to have a line structure similar to that of television images. By this method he found that at least 400 to 500 lines are required to give the same apparent quality as the original film projected directly.

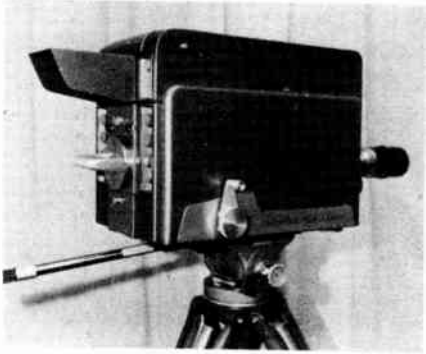

A modern television camera. The camera controls are shown mounted in slots to protect them against accidental changes in setting during operation.
Courtesy General Electric Co.

It is interesting to note that the experimental findings of Engstrom are in agreement with the theoretical calculations given above. Both place the required number of scanning lines roughly between four and five hundred.

The quality of the image is reduced if the individual scanning lines are visible to the observer. The greater the number of lines, the closer they must be spaced, and the less the likelihood of them being seen. Because of the annoyance caused by visible scanning lines, the required number of lines is greater than that needed to obtain equal horizontal and vertical detail. Also, the relative horizontal and vertical detail in an image may be varied over rather wide limits without degrading the picture quality. Therefore, the preferred total number of scanning lines is in the neighborhood of 500, while the reason for an odd number was mentioned in the explanation of interlaced scanning.

Finally, to simplify the design of the transmitter synchronizing circuits, the chosen value should contain a minimum of odd whole number factors. The value 525 has the simple factors of 3×5×5×7, and meets this requirement.

To summarize, *the selection of the number of scanning lines per frame has been based upon the factors of (1) image quality, (2) utilization of the available bandwidth, and (3) circuit design limitations.*

The horizontal scanning frequency shall be 2/455 times the chrominance subcarrier frequency; this corresponds nominally to 15,750 cycles per second (with an actual value of 15,734.264±0.044 cycles per second). The vertical scanning frequency is 2/525 times the horizontal scanning frequency: this corresponds nominally to 60 cycles per second (the actual value is 59.94 cycles per second). For monochrome transmission only, the nominal values of line and field frequencies may be used.

The sweep frequencies for color television are slightly lower than those used for monochrome, due to the method of modulation of the color signal. Color signals are used to modulate a low frequency carrier while the signals corresponding to black-and-white modulate the main carrier. To complete the color video carrier, the sidebands of the low frequency carrier modulate the main carrier, also.

The low carrier frequency has been selected by tests as 3.579545 mc, and is called the COLOR SUBCARRIER. This subcarrier provides the best color picture with the greatest compatibility. Also, beat frequency interference is reduced between the subcarrier and sound carrier. To prevent interference between the sidebands of the main carrier and the color subcarrier, the subcarrier frequency must be equal to a harmonic of the half-line scanning frequency. In this case, it is the 455 harmonic of the half-line frequency.

Therefore, as stated in this color standard, the horizontal scanning frequency must be 2/455 times 3.579545 mc or 15734 cps. Although the color horizontal frequency is slightly lower than the 15750 cps. previously given for the standard black-and-white transmission, black-and-white receivers readily operate at this new frequency without any manual adjustment.

In order to provide interlace scanning, the vertical sync frequency must be reduced, also. As indicated in this standard, the vertical scanning frequency is equal to 2/525 times the horizontal scanning frequency. The black-and-white receivers readily operate at this new vertical frequency without manual adjustments, also.

When a station is transmitting a standard monochrome signal, the nominal values (vertical 60 cps, horizontal 15750 cps) may be used.

Color pictures can be received in monochrome by black-and-white receivers and monochrome pictures are received in black-and-white by the color receiver. Thus, this system is completely compatible.

The aspect ratio of the transmitted television picture shall be 4 units horizontally to 3 units vertically.

The aspect ratio is the ratio of the width to the height of the picture. Thus, a picture 6 inches in height is 4/3×6, or 8 inches wide. Though it would be possible to use almost any shape, the selection of a rectangular frame simplifies the design of deflection circuits. Also, since most scenes contain more horizontal than vertical motion, it is most suitable that the picture area be wider than it is high.

The aspect ratio of 4:3 is in use in the motion picture film industry, therefore, standard motion picture film can be transmitted by television without waste of picture area. Moreover, this particular ratio is practically the same as that which has been found to have particular artistic merit in the design of radio cabinets. Therefore, in addition to its technical advantages, the width to height ratio of 4:3 is the one most pleasing to the eye.

During active scanning intervals, the scene shall be scanned from left to right horizontally and from top to bottom vertically, at uniform velocities.

Preceding explanations have described the movement of the cathode ray beam in conformity with the specifications of this standard.

Only unidirectional linear scanning produces an even distribution of detail, is easy to synchronize, and makes full use of the video bandwidth. All other possible methods,

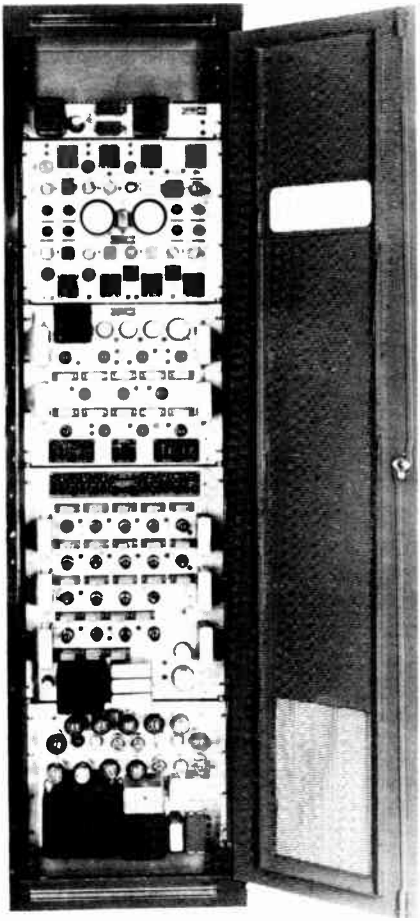

To develop the standard monochrome synchronizing voltages, a sync generator of this or similar types is required in each television station.

Courtesy Allen B. Du Mont Labs. Inc.

such as bi-directional, sinusoidal, and spiral scanning, are each characterized by a lack of one or more of these desirable qualities.

PICTURE SIGNAL MODULATION

The radio frequency signal, as radiated, shall have an envelope as would be produced by a modulating signal in conformity with Appendix III, Figure 4, as modified by vestigial sideband operation specified by Appendix III, Figure 3.

The Figure 3 referred to is Figure 1 of this text.

A decrease in initial light intensity shall cause an increase in radiated power (negative transmission).

To comply with this standard, the television system must operate so that the brighter parts of the scene cause a reduction in the transmitter's radiated output power, while the dark parts of the scene cause an increase in the radiated power. At the receiver, a reduction of incoming signal strength must result in an increase of screen brightness, while an increase of incoming signal must cause a reduction in screen brightness. This system is called NEGATIVE TRANSMISSION.

So far as the transmission of video signals is concerned, the opposite method, "positive transmission," might be employed, but negative transmission was selected as the result of tests of the effects of "noise" voltages on the receiver screen. Any undesired r-f energy (such as automobile ignition interference) adds itself to the signal from the transmitting station, and causes an increase in total signal strength at the receiver.

With positive transmission, this increase in signal would cause light spots, flashes, or streaks on the screen, but, with negative transmission, the increase in signal results in dark spots. When the pick-up of interference voltages cannot be eliminated, experience has shown that the resulting dark spots are hardly noticeable, whereas light flashes or streaks are decidedly annoying.

On the other hand, with positive transmission, noise voltages cause much less interference with the synchronizing signals. However, with negative transmission, a very simple and effective automatic gain control circuit may be incorporated into the receiver, and, finally, a given transmitter can radiate 30% more power than with positive transmission. Because the balance of the advantages lie on the side of negative transmission, it has been adopted as standard in the United States.

The reference black level shall be represented by a definite carrier level, independent of light and shade in the picture.

On the television receiver screen, it is important that all objects or areas of any particular light or shade be reproduced with the same relative values of light intensity each time they appear. The intensity of the light produced by the scanning spot depends upon the signal voltage applied to the control grid of the picture tube, therefore, a definite level of signal amplitude must be established. As the relative illumination of various parts of a reproduced image can be evaluated only by comparison, the reference level has been set at that value of signal which "cuts off" the electron beam.

With the beam cut off, the scanning spot does not illuminate the screen and thus produces a BLACK element or area. To cause this condition, the signal output of the transmitter must rise to the same definite level each time a black area is scanned. This is known as the BLACK LEVEL and must be independent of other values of light and shade in the picture.

The blanking level shall be transmitted at 75 per cent ±2.5 per cent of the peak carrier level.

The reference black level shall be separated from the blanking level by the setup interval, which shall be (7.5±2.5) per cent of the video range from the blanking level to the reference white level.

The amplitude difference between the blanking level and the black level corresponding to black in the reproduced picture, is known as the setup interval. In the monochrome standard, to provide the maximum possible amplitude range for the scale of grays, states that "the black level shall be made as nearly equal to the (blanking) pedestal as the state of the art will permit." This implies a setup of zero but this is difficult to achieve as proved by monochrome network operation.

The absence of a definite setup, or black level, makes d-c restoration relatively ineffective, since these circuits depend upon a signal which is under reasonably tight control. In color receivers d-c restoration is a must, therefore, the black level and its tolerances are established in this standard.

The reference white level of the luminance signal shall be 12.5±2.5 per cent of the peak carrier level.

The minimum amplitude level for maximum white is 10 per cent 12.5± 2.5 per cent of the carrier peak amplitude. This limit was put into effect in most monochrome stations before this particular standard was adopted since it protects the quality of sound reception in intercarrier receivers.

SOUND SIGNAL MODULATION

Frequency modulation shall be used for the television sound transmission.

Because of the tremendous improvement in the signal-to-noise ratio of FM over AM sound transmission, it has been decided to use frequency modulation for the television sound transmission.

Pre-emphasis shall be employed in accordance with the impedance frequency characteristic of a series inductance-resistance network having a time constant of 75 microseconds.

In general, the higher frequency components of speech and music have less amplitude than the lower frequencies, but noise voltages increase with frequency. Therefore, the normal signal-to-noise ratio would be lower at higher frequencies. To improve this ratio, at the transmitter the high audio frequencies are over amplified or pre-emphasized so their amplitude will be high compared to that of any noise voltages picked up by the receiver. Then, at the receiver, the high frequencies are attenuated to their normal level. Since this attenuation reduces the noise amplitude also, an improved signal-to-noise ratio is obtained.

SYNCHRONIZING SIGNALS

A carrier shall be modulated within a single television channel for both picture and synchronizing signals. For monochrome transmission, the two signals comprise different modulation ranges in amplitude, in

accordance with the charts designated as Appendix III, Figures 3 and 4 (b).

The "Figures 3 and 4" referred to in the official wording of this standard is shown here as Figures 1 and 5, respectively. Including the PICTURE SIGNAL, BLANKING PULSES, and SYNCHRONIZING PULSES: this is the wave-form of the complete video signal which modulates the video carrier at the transmitter. Neglecting any distortion, this same wave-form is reproduced in the receiver video amplifier stages which follow the video 2nd detector.

As shown in Figure 5, in addition to the picture signals, the video carrier is modulated by the synchronizing signals and this standard specifies that the synchronizing signals must differ from the picture signals in amplitude. This arrangement makes it possible for the receiver to separate the synchronizing and picture signals and pass them on to the proper circuits. The exact nature of the synchronizing signal is specified in a later standard.

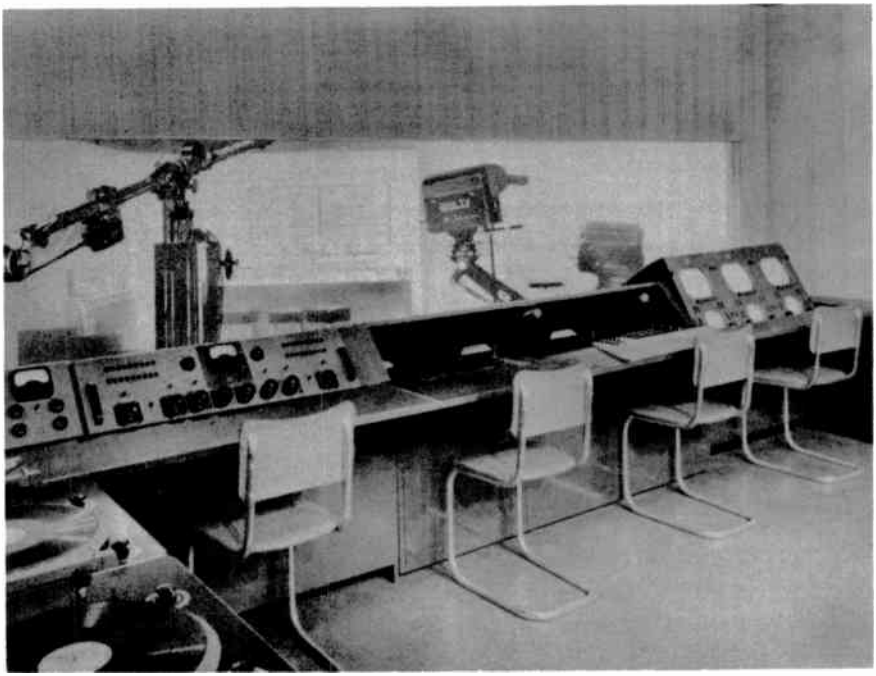

A view of a TV control studio. The audio console and turn tables are shown at the left and the program director's console and camera control units are shown at the right.

Courtesy RCA Victor

Starting at the left, the curves of Figure 5 represent a few lines at the end of one field, the vertical retrace time, and a few lines at the beginning of the next field. The larger central portion of the curves represent the video wave-form during the time that the electron beam is returning from the bottom to the top of the screen. This is the portion labeled VERTICAL BLANKING PULSE in Figure 5A and, although not labeled, it occupies a similar portion of Figure 5B.

The vertical blanking pulse of the signal is really a relatively long, rectangular or "square" pulse, on top of which are superimposed the various shaped synchronizing pulses. Though only a few lines are shown preceding and following the vertical blanking pulses, actually there are approximately 240 of them in each field.

Occurring during the line scanning periods, the picture signal is shown between the HORIZONTAL BLANKING PULSES at each side of the drawing. The horizontal blanking pulses occur during the horizontal retrace movement of the beam to reduce the spot brilliance to the black level so that the retrace lines are not seen on the screen. The narrow horizontal synchronizing pulses which control the frequency of the horizontal deflection generator are superimposed on top of these blanking pulses.

Insofar as the curves are concerned, each of the scanning line periods is about the same, therefore only a few are shown. To include all 240 or so of a complete field would require either a very long sheet of paper, or a curve such as Figure 6A in which the line periods are squeezed together so closely that they cannot be distinguished.

In Figure 6A, the curve between points a and b represents the picture signals, horizontal blanking and synchronizing signals for all the lines of one field, while the part between points b and c represents the period during which the beam returns from the bottom to the top of the picture. Compared with Figure 5A, section b to c of Figure 6A represents the vertical blanking pulse and shows its relationship to the total time (a to c) of one field.

In Figure 5, the curves represent the amplitude variations of the video carrier with time. With a rise in signal amplitude, the control grid of the receiver picture tube swings negative, decreasing the intensity of the beam and reducing the light on the screen. Therefore, the lowest signal amplitude, indicated as MAXIMUM WHITE in the figure, causes the receiver screen to be brightest. As the signal increases, the screen becomes darker until, at the amplitude labeled BLACK LEVEL, it is totally dark. Then, so far as the eye is concerned, any further increase in signal amplitude has no effect on the screen.

The synchronizing pulses have amplitudes greater than that of the black level, and rise to what is called the ULTRA BLACK or BLACKER-THAN-BLACK region. Since they occur during the horizontal and vertical blanking periods only, at which time the cathode ray beam is cut off, they have no effect on the image and need not be filtered from the video signal applied to the picture tube.

However, it is important to prevent the blanking and picture signals from affecting the deflection circuits and, to make their separation possible, the synchronizing pulses have greater amplitude than the remainder of the complete video signal.

The curve of Figure 6A represents the video signal during the period of two fields, or one complete frame, while the curve of Figure 6B represents the sawtooth current in the vertical deflection coils. This current causes the spot to move at uniform speed from the top to the bottom of the screen and then fly back to the top, repeating the cycle 60 times per second.

Near the end of the vertical blanking interval, the sawtooth alternating current reaches its maximum negative value, indicated at point 1, to move the scanning spot to the top of the screen. Then, at a steady rate, the current reduces to zero, reverses and increases to maximum positive, indicated at point 2, near the start of the vertical blanking interval. As indicated by the straight portion of the curve between points 1 and 2, this overall change of current causes the scanning spot to move at a uniform speed from the top to the bottom of the screen.

During the vertical blanking interval, between curve points 2 and 3, the current changes rapidly from maximum positive to maximum negative causing the scanning spot to return rapidly to the top of the screen. After point 3, which corresponds to point 1, the cycle is repeated through points 4 and 5. The rapid return or "flyback" of the scanning spot always occurs during the vertical blanking interval when the picture tube control grid is biased to beam cutoff.

The portion of the curve between points Y-Y of Figure 6A is expanded in Figure 6C to show the details of several horizontal sweep cycles with part of the vertical blanking pulses. Drawn to the same scale, the curve of Figure 6D represents the sawtooth current in the horizontal deflection coils. Except for the difference in frequency the horizontal and vertical sawtooth currents are essentially the same.

Referring to the curve of Figure 6D, the uniform change of current between points 1 and 2 causes the scanning spot to move at a steady speed from the left to the right side of the screen. During this interval

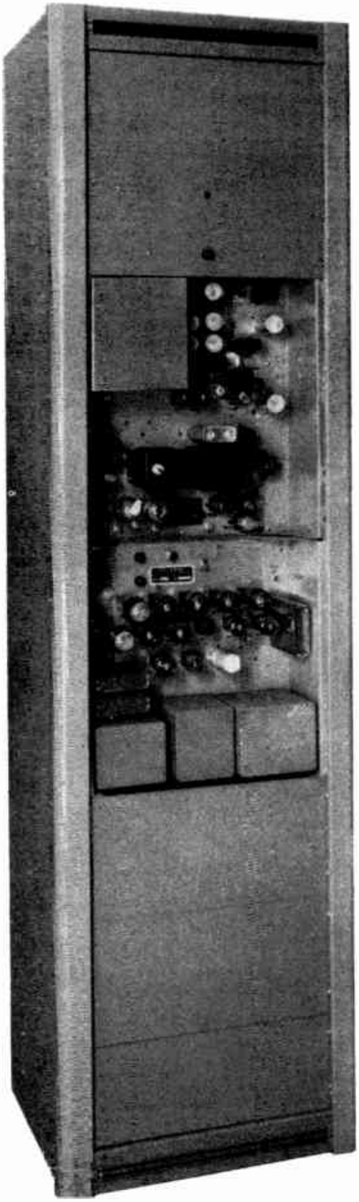

The monoscope is used by many stations to transmit a test pattern. The camera tube has the desired pattern etched on the photo cathode. Thus, the signal source is contained with the unit.

Courtesy Polarad Electronics Corp.

the picture signal is applied to the picture tube control grid and the image elements of one horizontal line are reproduced on the screen.

During the horizontal blanking pulse interval, between points 2 and 3 on the curve, the sawtooth current changes rapidly from maximum positive to maximum negative thereby causing the scanning spot to flyback to the left side of the screen. During this interval the picture tube control grid is biased to beam cutoff. Therefore, the scanning spot is not visible.

Applied to the horizontal sweep generator, the horizontal sync pulses cause the flyback portion of the sawtooth current to begin at the instant the wave front of each sync pulse arrives. Since a blanking pulse precedes each sync pulse, the scanning spot is extinguished a short instant before the sawtooth flyback, thereby preventing any part of the return traces being visible.

Similar conditions are true in the case of the vertical blanking and sync pulses with the flyback of the vertical sawtooth current occurring at the end of the SERRATED VERTICAL SYNC PULSE, point x in Figure 6C, sometime after the vertical blanking pulse has darkened the screen.

During the vertical retrace interval, the horizontal sawtooth generator is kept in constant synchronism by the wave fronts of the serrated vertical sync pulse as shown by cycles labeled m to s of Figure 6D. Although, for this purpose, the equalizing pulses serve as horizontal synchronizing pulses, their primary function is to help maintain a properly interlaced scanning pattern, an action which will be taken up later in the detailed explanations of the receiver synchronizing circuits.

The actions represented by the curves of Figure 6 are combined in the drawing of Figure 7, to show the path of the scanning spot on the picture tube screen during the interval between points a and z on the curve of Figure 5B. In Figure 7, the solid lines represent the "active" periods when the picture signal is modulating the light intensity of the scanning spot, and the dashed lines represent the flyback or retrace periods when either the horizontal or vertical blanking pulses have extinguished the spot.

Starting at point a, near the lower left-hand corner of Figure 7, the scanning spot moves to point b. The modulating picture voltage, applied to the picture tube control grid during this period is designated as "picture" by small arrows in Figure 5A. At point b of Figure 7, the horizontal blanking pulse extinguishes the spot and, an instant later, at point c, the horizontal sync pulse initiates the flyback portion of the horizontal sawtooth current.

During flyback, the invisible spot moves to point d, Figure 7, after which it again begins to travel to the right. At point e, the horizontal blanking voltage is removed, the spot becomes visible and again its intensity is varied by the picture modulation applied to the control grid of the tube.

In the same manner as explained above, the spot moves across the screen to point f, back to point g, and to the right to point h. Here, the vertical blanking pulse makes the spot invisible but it continues to the right to point i. Although not shown in the simplified drawing of Figure 7, several horizontal traces occur between points i and j, during which time the control grid is held at beam cutoff potential by the blanking pulse.

At point j, the vertical sync pulse initiates the flyback portion of the vertical sawtooth current and the beam starts up toward the top of the screen. Due to the continued application of the horizontal deflection current, the frequency of which is much higher than that of the vertical deflection current, the beam is swept back and forth across the screen several times while it is moving from the bottom to the top.

For simplicity, part of the horizontal cycles have been omitted in Figure 5B where the blanking level is shown with a break between two horizontal pulses points. These invisible horizontal sweeps which occur during the interval of the vertical blanking pulse are known as "inactive" scanning lines. In practice there are about 20 inactive lines in each field or 20×2=40 in each frame so that, in a standard raster there are approximately 525—40=485 active or useful lines.

Point 0, Figure 7, corresponds to point 3 on the curve of Figure 6B. Therefore the vertical motion of the invisible beam reverses and it starts down the screen through points p and q to r. Here, the vertical blanking voltage is removed, the scanning spot becomes visible and with the picture signal applied to the control grid, it traces one half of an active line between points r and s. At point s, the spot is extinguished by the horizontal blanking pulse but continues to point t where its direction is reversed by the horizontal sync pulse.

Following the indicated path, there is a horizontal flyback to point u, an "active" scanning sweep to point v, flyback to w, and so on through points x and y to z.

Here, at point z, the spot is tracing the third line of the second field and, after completing this field and all but three lines of the one following, will be at point a on the third line from the bottom, as at the beginning of this explanation.

Except for the omitted horizontal sweep cycles, the curves of Figures 5A and 5B represent the two fields of one complete frame. In the simplified sketch of Figure 4, the field containing lines 1, 3, 5, etc., corresponds to that of Figure 5A, while the field containing lines 2, 4, 6, etc., corresponds to that of Figure 5B which has been explained with the aid of Figure 7. Therefore, for a similar explanation of Figure 5A, a drawing like that of Figure 7 would have to be modified only to the extent of shifting the vertical blanking pulse to extend from the end of the last active scanning line at the bottom to the beginning of the first active scanning line at the top of the raster.

The following six standards apply to details of the synchronizing waveform, the ratings of the transmitter, and the frequency deviation of the FM sound carrier. Their fulfillment is a matter of transmitter design and their purpose is to obtain uniformity of operation with a minimum of deviation of the synchronizing signals.

The time interval between leading edges of successive horizontal pulses shall vary less than one-half of 1 per cent of the average interval.

The rate of change of the frequency of recurrence of the leading edges of the horizontal

synchronizing signals shall not be greater than 0.15 per cent per second, the frequency to be determined by an averaging process carried out over a period of not less than 20, nor more than 100 lines, such lines not to include any portion of the blanking interval.

TRANSMITTER RATINGS

The picture transmitter shall be rated in terms of its peak power when transmitting a standard television signal.

A radiated power of the aural transmitter not less than 50 per cent nor more than 70 per cent of the peak radiated power of the video transmitter shall be employed.

The aural transmitter shall operate satisfactorily with a frequency swing of ±25 kilocycles, which is considered 100 per cent modulation.

The signals radiated shall have horizontal polarization.

Radio waves are generally considered to be made up of electric and magnetic components, which exist at right angles to each other. By agreement, the position of the electric component is taken to be the position of "polarization" of the whole wave. Thus, a radio wave in which the electric component is in a horizontal direction, is said to be HORIZONTALLY POLARIZED. This is the type used in commercial FM radio broadcasting, while commercial AM radio broadcasting employs vertically polarized waves.

The rectangular type CRT is designed to reproduce a picture with the standard aspect ratio of 4 to 3 without wasting screen space.

Courtesy Raytheon Mfg. Co.

Receiver antennas have maximum pickup when their polarization is the same as that of the signals they are to receive, and it is difficult to design a receiving antenna that can be changed easily from one plane of polarization to another. Therefore, it was imperative that either vertical or horizontal polarization be decided upon as standard so that all transmitting and receiving antennas can be positioned alike.

Since most of the advantages lie with HORIZONTAL POLARIZATION, it is the method selected for commercial television broadcasting in the United States.

The field strength or voltage of the lower sideband, as radiated or dissipated and measured as described in subparagraph (4) of this paragraph, shall not be greater than —20 db for a modulating frequency of 1.25 mc or greater and in addition, for color, shall not be greater than —42 db for a modulating frequency of 3.579545 mc (the color subcarrier frequency). For both monochrome and color, the field strength or voltage of the upper sideband as radiated or dissipated and measured as described in subparagraph (4) of this paragraph shall not be greater than —20 db for a modulating frequency of 4.75 mc or greater.

(4) The attenuation characteristics of a visual transmitter shall be measured by application of a modulating signal to the transmitter input terminals in place of the normal composite television video signal. The signal applied shall be a composite signal composed of a synchronizing signal to establish peak output voltage plus a variable frequency sine wave voltage occupying the interval between synchronizing pulses. The axis of the sine wave in the composite signal observed in the output monitor shall be maintained at an amplitude 0.5 of the voltage at synchronizing peaks. The amplitude of the sine wave input shall be held at a constant value. This constant value should be such that at no modulating frequency does the maximum excursion of the sine wave, observed in the composite output signal monitor, exceed the value 0.75 of peak output voltage. The amplitude of the 200 kilocycle sideband shall be measured and designated zero db as a basis for comparison. The modulation signal frequency shall then be varied over the desired range and the field strength or signal voltage of the corresponding sidebands measured. As an alternate method of measuring, in those cases in which the automatic d-c insertion can be replaced by manual control, the above characteristic may be taken by the use of a video sweep generator and without the use of pedestal synchronizing pulses. The d-c level shall be set for midcharacteristic operation.

For monochrome transmission only, the over-all attenuation characteristics of the transmitter, measured in the antenna transmission line after the vestigial sideband filter (if used), shall not be greater than the following amounts below the ideal demodulated curve. (See Appendix III, Figure 7.)

2 db at 0.5 mc
2 db at 1.25 mc
3 db at 2.0 mc
6 db at 3.0 mc
12 db at 3.5 mc

The curve shall be substantially smooth between these specified points, exclusive of the region from 0.75 to 1.25 mc.

The Figure 7 referred to is Figure 9B of this text.

The peak-to-peak variation of transmitter output within one frame of video signal due to all causes, including hum, noise, and low-frequency response, measured at both scanning synchronizing peak and blanking level, shall not exceed 5 percent of the average scanning synchronizing peak signal amplitude.

An earlier standard specifies that the synchronizing signals must differ from the picture signal in amplitude. This difference in amplitude makes it possible for the television receiver to separate the synchronizing and picture signals and apply them to the proper circuits.

To comply with the above standard, the peak voltage of the signal, hum, noise, etc. should not exceed the average amplitude of the sync pulses. When signal or noise voltages are allowed to exceed the average amplitude of the sync pulses improper synchronization occurs in the receiver. However, proper synchronization between the transmitter and receiver is maintained when the average amplitude of the signal and noise voltages do not exceed the sync pulse average amplitude for one frame.

For monochrome transmission, the transmitter output shall vary in substantially inverse logarithmic relation to the brightness of the subject. No tolerances are set at this time.

The light output of the picture tube does not vary linearly with the electric input. To properly reproduce black and white tone gradations in the picture, it is necessary to make allowances for the non-linearity of the light-control characteristic of the picture tube. The correction is made by employing compensating non-linear devices called GAMMA-CORRECTING AMPLIFIERS.

Normally, the picture tube light-control characteristic approximates a power law. The light output varies at something between the square and the cube of the applied video signal voltage. Therefore, GAMMA CORRECTION requires that the output from the amplifier should vary at something between the square and cube root of the light input to the camera. Gamma corrected signals produce an excellent black-and-white picture on the receiver screen.

The last three standards are subject to change, but are considered the best practice under the present state of the art. They will not be enforced pending further determination of transmission.

COLOR STANDARDS

As mentioned earlier, the NTSC standards for color transmission have been proposed to and adopted by the FCC. The signals transmitted by this system can be received by existing white-and-black receivers. Also, black-and-white telecasts may be received by the color receiver. Therefore, this system is completely compatible.

The color picture carrier consists of two signals, the monochrome, or black-and-white signal, and the color signals. Although two signals are required in the color system, the monochrome signal is the same in both the NTSC and black-and-white system. Hence, most of the monochrome standards are required for color transmission. Therefore, the standards that follow are either changes or added requirements needed for color transmission.

A carrier shall be modulated within a single television channel for both picture and synchronizing signals. For color transmission the two signals comprise different modulation ranges in amplitude except where the chrominance penetrates the synchronizing region and the burst penetrates the picture region, in accordance with the charts designated as Appendix III, Figures 3 and 4(a).

The Figures 3 and 4(a) referred to are Figures 1 and 8 of this text.

The color burst is located on the blanking pulse as illustrated in Figure 8C. These portions of the burst below the blanking level causes brightness of the screen but under ordinary viewing conditions it is not noticeable. Since this brightening of the screen occurs during horizontal retrace which is ten times as great as the active scan, in effect it is reduced by a factor of ten.

The portion of the color burst extending below the blanking level is not great, only about 10 percent of the peak signal amplitude. Due to the setup interval described in these standards, a portion of its amplitude is blanked out and only about 8 percent occurs in the range reserved for the gray scale. Finally, the picture tube characteristics compress the darkest grays. The net brightness is a small fraction of one percent of the peak brightness and, therefore, is undetectable for all practicable purposes.

Where the chrominance signal penetrates the sync pulse region, no harmful effects occur. In the receiver, the sync channel bandwidth is very narrow and thus accepts very little of the picture signal. That is, when any of the chrominance signal enters the sync system, these circuits treat it like noise and prevent it from affecting sync timing.

The chrominance signals which extend above the blanking level have no effects on the picture, since they extend into the infrablack region. Also, any signals which extend too far into the white region are clipped, or cut off.

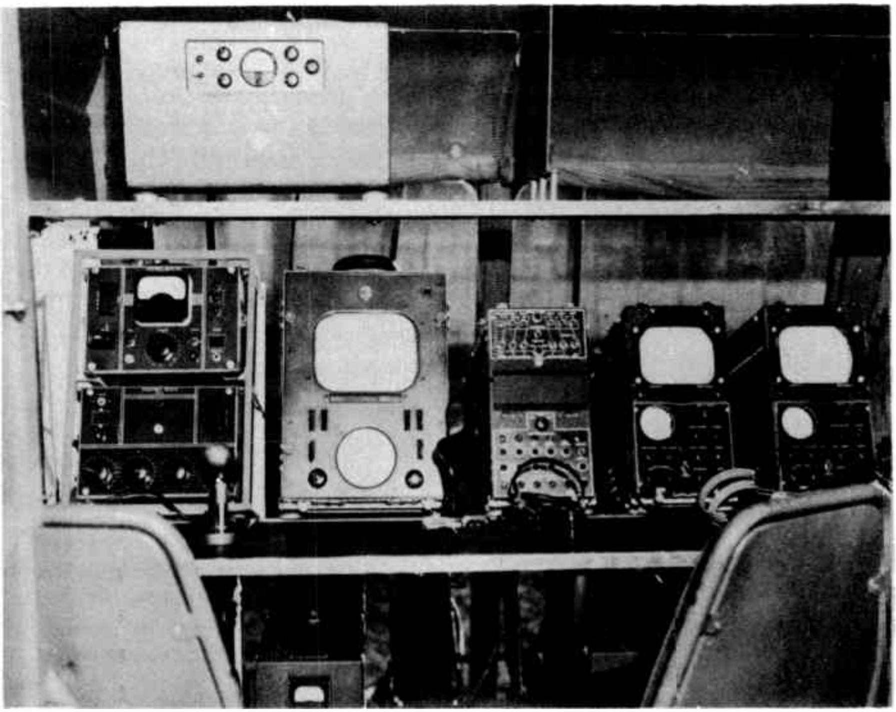

Mobile equipment mounted in o special truck permits "on the scene" monitoring of sports events, news events, etc.

Courtesy Radio Corporation of America

The radio frequency signal, as radiated, shall have an envelope as would be produced by a modulating signal in conformity with Appendix III, Figure 4 (a) or (b), as modified by vestigial sideband operations specified by Appendix III, Figure 3.

The "Figures 4 (a) or (b)" referred to in this standard are shown as Figures 8 and 5 and "Figure 3" is that of Figure 1. Figure 8A shows the picture signal, vertical, equalizing, and horizontal pulses with the color bursts on the trailing edge of the horizontal blanking pulse. The bursts are omitted during monochrome transmission. Therefore, with the exception of the color bursts, this signal is the same as the monochrome signal previously described and shown in Figure 5.

The Figure 8A wave-form represents the last few lines of a field, the vertical retrace time, and the first few lines of the next field. At the end of this second field, the wave-form will look like the one shown in Figure 5B. However, the color burst appears after the horizontal sync pulses for color transmission.

As shown in Figures 8A and 8B, the color bursts follow the horizontal sync pulses and are omitted during the equalizing and vertical pulse time. Figure 8B shows the color bursts are shown located on the back porch of the blanking pulse. Figure 8C shows an enlarged view of the horizontal sync pulse, blanking pulse, and the color burst.

This color burst, or sync signal, is transmitted at the frequency of the horizontal sync pulses. The burst consists of approximately 9 cycles of the subcarrier frequency. This burst frequency synchronizes the color oscillator in the receiver to that of the subcarrier oscillator in the transmitter. Thus, the received colors are reproduced in step with those transmitted.

The frequency of the horizontal sync pulses and the color burst is 2/455 times the subcarrier frequency.

In Figure 8A, the dimension P represents the peak-to-peak excursion of the luminance signal, but does not include the chrominance signal. The dimension S is the amplitude of the horizontal sync pulse. The peak-to-peak amplitude of the burst frequency equals .9 to 1.1 times the sync pulse amplitude, as shown in Figure 8C. Dimension C is the maximum amplitude of the complete color signal.

The field strength measured at any frequency beyond the limits of the assigned channel shall be at least 60 decibels below the peak picture level.

This standard specifies that amplitude of any frequencies transmitted beyond the limits of the assigned channel, as illustrated in Figure 9, should be low to prevent interference in adjacent channels.

COLOR PICTURE MODULATION

The color picture signal shall correspond to a luminance (brightness) **component transmitted as amplitude modulation of the picture carrier and a simultaneous pair of chrominance** (color) **components transmitted as the amplitude modulation sidebands of a pair of suppressed subcarriers in quadrature.**

The chrominance subcarrier frequency shall be 3.579545 mc ±10 cycles per second with a maximum rate of change not to exceed 1/10 cycle per second per second.

The color picture signal consists of black-and-white elements which determine the brightness and the color components transmitted simultaneously. As in standard black-and-white transmission, the monochrome in the color signal covers a frequency range of 5.25 mc. The chrominance signal covers a frequency range of 2.1 mc. This channel arrangement is illustrated in Figure 9A.

As shown in this Figure, the monochrome and color signals are transmitted in a 6 mc channel. To prevent interaction between the black-and-white and the color carriers, a method is used by which the signals are combined without interference. This method, known as frequency-interlace, permits the two signals to be combined and transmitted simultaneously.

Extensive field testing with color receivers indicated that a low subcarrier frequency produced better color pictures with greater stability. The subcarrier frequencies selected for test were 3.898125 mc, 3.740625 mc, and 3.583125 mc. The lowest of these subcarrier frequencies produced the best color pictures.

Also, a large number of compatibility tests were made to select the subcarrier which provided best black-and-white receiver performance. Since the lowest subcarrier provides the best color picture, the frequency was shifted to 3.579545 mc which produced the greatest compatibility.

In some black-and-white receivers, a beat between the color subcarrier and the sound carrier (4.5 mc) appeared as a series of wavy lines on the screen. This effect was improved by the slight decrease in the subcarrier frequency and applying the frequency-interlace method of modulation.

Frequency-interlace permits the monochrome and the color signals to be transmitted in a 6 mc channel without interference. It is fortunate that the monochrome sidebands do not completely fill the 5.25 mc band. Instead the sidebands are bunched in evenly spaced groups above and below the picture carrier.

This spacing of sidebands is illustrated in Figure 10. As each vertical element is scanned, such as A in Figure 10A, it is crossed at the line frequency. Scanning line 102 crosses A 1/15,734 of a second later than line 101. In the same manner lines 103, 104, etc. cross element A at 1/15,734 of a second intervals. As a result the video frequencies related to element A are at the fundamental or harmonic of the scanning frequency.

A color television receiver. Standardization of the television signal permits this receiver to reproduce pictures in either color or monochrome.

Courtesy Columbia Broadcasting System, Inc.

When a tilted element is scanned, such as line B in Figure 10A, each successive horizontal scan crosses it slightly sooner. Therefore, the video signal contains slightly higher frequencies than those of line A. On the other hand line C is tilted in the opposite direction and lower video frequencies are developed.

Hence,the sidebands transmitted by the monochrome signal occur in bunches in the manner shown in Figure 10B. Frequency-interlace uses the space left between the monochrome sidebands.

This interlace is accomplished by modulating the 3.579545 mc subcarrier with color signals and then modulating the monochrome carrier with the color sidebands. Since the subcarrier frequency is the 455 harmonic of the half-line frequency (7867 cps), the subcarrier and its sidebands fall midway between the monochrome sidebands as shown in Figure 10C. Therefore, much more information is transmitted in the 6 mc channel without one appreciably affecting the other.

A sine wave, introduced at those terminals of the transmitter which are normally fed the color picture signal, shall produce a radiated signal having an envelope delay, relative to the average envelope delay between 0.05 and 0.20 mc, of zero microseconds up to a frequency of 3.0 mc; and then linearly decreasing to 4.18 mc so as to be equal to $-0.17\,\mu$sec

at 3.58 mc. The tolerance on the envelope delay shall be ±0.05μsec at 3.58 mc. The tolerance shall increase linearly to ±0.1 μsec, down to 2.1 mc, and remain at ±0.1 μsec down to 0.2 mc. The tolerance shall also increase linearly to ±0.1 μsec at 4.18 mc.

To comply with this standard, the color transmitter system must operate so that the color signals are not shifted with respect to the average envelope delay between .05 and .2 mc. Should these color frequencies be delayed in time, the reproduced colors on the receiver screen are shifted from their correct position. However, the higher color frequencies are allowed some time delay. These higher frequencies represent the small color detail which is not easily detected by the eye.

COLOR SIGNAL

The color picture signal has the following composition:

$E_m = E_y' + \{E_Q' \sin (\omega t + 33°) + E_I' \cos (\omega t + 33°)\}$ where,

$E'_Q = 0.41(E_B' - E_Y') + 0.48(E_R' - E_Y')$,

$E_I' = -0.27(E_B' - E_Y') + 0.74(E_R' - E_Y')$,

$E_Y' = 0.30E_R' + 0.59E_G' + 0.11\ E_B'$,

The phase reference in the E_m equation is the phase of the (color burst + 180°). The burst corresponds to amplitude modulation of a continuous sine wave.

For color-difference frequencies below 500 kc the signal can be represented by:

$$E_m = E_y' + \left\{\frac{1}{1.14}\left[\frac{1}{1.78}(E_B' - E_y') \sin \omega t + (E_R' - E_y') \cos \omega t.\right]\right\}$$

The symbols in these expressions have the following significance:

(a) E_m is the total video voltage, corresponding to the scanning of a particular picture element, applied to the modulator of the picture transmitter.

(b) E_y' is the gamma-corrected voltage of the monochrome (black-and-white) portion of the color picture signal, corresponding to the given picture element.

(c) E_R', E_G', and E_B' are the gamma-corrected voltages corresponding to red, green, and blue signals during the scanning of the given picture element.

(d) E_Q' and E_I' are the amplitudes of two orthogonal components of the chrominance signal corresponding respectively to narrow-band and wide-band axes.

(e) The angular frequency ω is 2π times the frequency of the chrominance subcarrier, and t is the time.

(f) The portion of each expression between brackets represents the chrominance subcarrier signal which carries the chrominance information.

In the color signal, E_Q' and E_I' are products of the color-difference frequencies. The color-difference system is used because less color distortion (color fringes on picture elements) is produced.

The block diagram of Figure 11 illustrates the operation of the color-

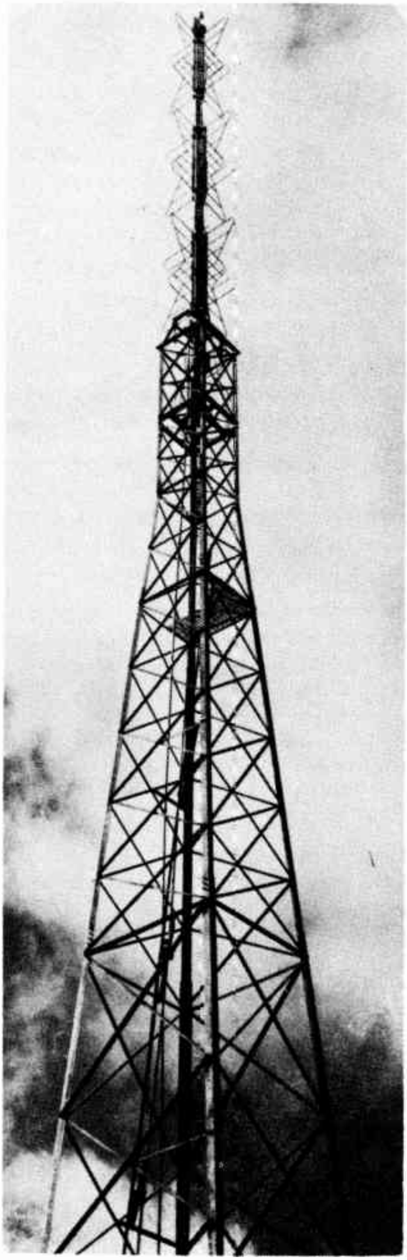

The television transmitting antenna is horizontally polarized to comply with the television standards.
Courtesy Radio Corporation of America

difference system. Picked up by the camera, the various color signals are applied to the attenuation matrix. The attenuation pads in the matrix are set to the specified gain to provide the color signals E_I and E_Q as well as a monochrome signal E_y.

After passing through a low pass filter, the E_y signal is applied directly to amplifiers in the video transmitter. However, the color signals do not modulate the transmitter directly. Instead, the E_Q and E_I signals modulate subcarriers and the resulting sidebands are combined and used to modulate the transmitter.

The gamma-corrected voltages E_G', E_R', and E_B' are suitable for a color picture tube having primary colors with the following chromaticities in the CIE system of specification:

	x	y
Red (R)	**0.67**	**0.33**
Green (G)	**0.21**	**0.71**
Blue (B)	**0.14**	**0.08**

and having a transfer gradient (gamma exponent) of 2.2 associated with each primary color. The voltages E_R', E_G', and E_B' may be respectively of the form $E_R^{1/\gamma}$, $E_G^{1/\gamma}$, and $E_B^{1/\gamma}$ although other forms may be used with advances in the state of the art.

The red, blue, and green color values referred to in the preceding standard are taken from the chart shown in Figure 12. This chart is based on the "super-saturated" colors chosen as standard primaries by the International Committee on Illumination (CIE).

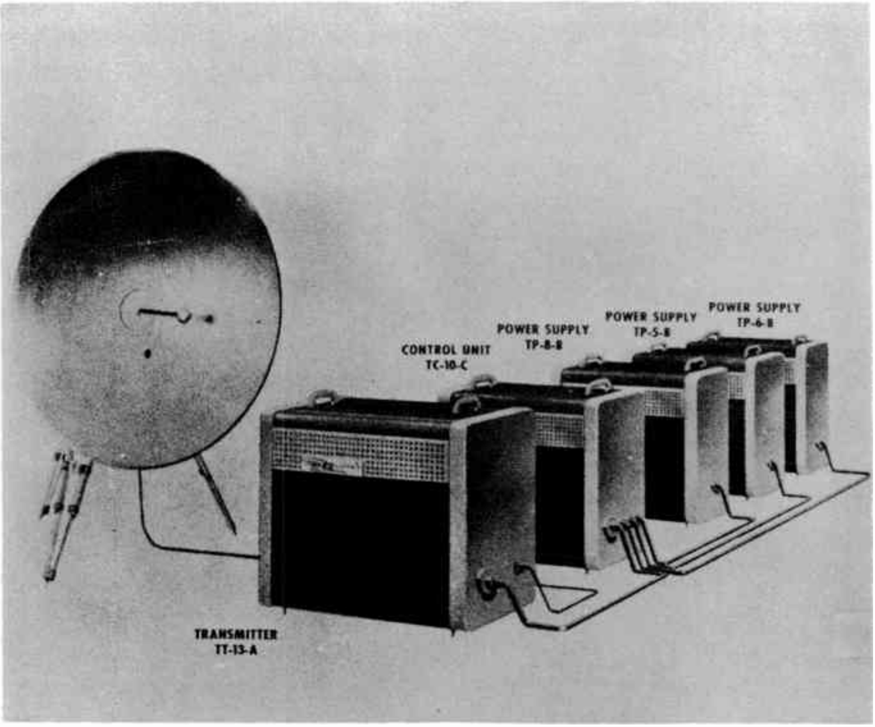

Semi-portable television equipment designed to relay the program to the main studios on a 2000 mc channel.

Courtesy General Electric Co.

With axes at right angles, the CIE super-green or y primary is plotted against those of super-crimson or x primary. Divided into values less than unity or 1, the points on the x and y axes are called mixing fractions. All mixing fractions must be positive to reproduce a real color. Therefore, any color plots as one point in this diagram; the location of this point specifies the chromaticity of the color.

In Figure 12, the most saturated colors occurring in nature are represented by the horse-shoe shaped curve. The points along the curve represent the wavelengths of the colors located in the light spectrum. The open end of the curve is closed by non-spectral purples.

The color points, indicated by G, B, and R, have been chosen as standard reproducer primaries by the National Television System Committee. The selected white point at C represents CIE Illuminant C.

Any color which is representable by a point within the triangle GRB, Figure 12, is reproduceable by a mixture of these primaries in the NTSC system.

In the color transmission system, to obtain the desired picture on the screen, the chromaticity signals require gamma correction. The voltages E_R', E_G', and E_B' in the expressions of the above specifications refer to the gamma-corrected signals.

In the cathode ray tube, the light-control characteristics are quite non-linear. To correct for the non-linear characteristics of the CRT, gamma-corrected signals are transmitted. The NTSC signal specification makes such allowance by requiring compensating non-linear devices, or gamma-correcting amplifiers.

Usually, the CRT light-control characteristics approximate a power law. Light output varies between the square and the cube of the applied video signal voltage. Therefore, gamma correction requires the signal output of each gamma amplifier to vary between the square and the cube root of the light input to the camera that feeds it.

The over-all result is that the color CRT light output varies linearly with the corresponding color camera light input. The NTSC signal specifications assume a 2.2 (gamma exponent) power CRT control law and thus, require a gamma compensator which combines with the camera to provide the required response. The gain settings given in the attenuator matrix of Figure 11 apply with the gamma compensation in place.

The radiated chrominance subcarrier shall vanish on the reference white of the scene.

The numerical values of the signal specifications assume that this condition will be produced as CIE Illuminant C($x=0.310$, $y=0.316$).

The point C shown in Figure 12 corresponds to white in the CIE system. When the light and shade in the scene is so proportioned that the result is illuminant C, only monochrome signals are contained in the transmitted carrier.

E_Y', E_Q', E_I' and the components of these signals shall match each other in time to 0.05 μsec.

To comply with this standard, the two modulated color subcarriers and the monochrome signal must retain the same time relations in the various stages of transmission. That is, the combined output of the modulators shall remain identical to the corresponding ones at the input terminals. Only then are the signals recovered in the receiver accurate and independent reproductions of the original signals.

COLOR TV CHANNEL

A sine wave of 3.58 mc introduced at those terminals of the transmitter which are normally fed the composite color picture signal shall produce a radiated signal having an amplitude (as measured with a diode on the r-f transmission line supplying power to the antenna) which is down 6 ± 2 db with respect to a signal produced by a sine wave of 200 kc. In addition, the amplitude of the radiated signal shall not vary by more than ±2 db between the modulating frequencies of 2.1 and 4.18 mc.

At the transmitter, the 3.58 mc and 200 kc sine waves are fed to the color and monochrome input terminals, respectively, and thus modulate the main carrier. The amplitude of the sidebands produced by the 3.58 mc sine wave is down 6 db with respect to the 200 kc sidebands. In addition, the sidebands produced by signals fed to the color terminals should not vary by more than ±2 db between the frequencies of 2.1 and 4.18 mc. Therefore, as indicated by the shaded area in Figure 9, the color sidebands have a flat response over a frequency range of about 2.08 mc.

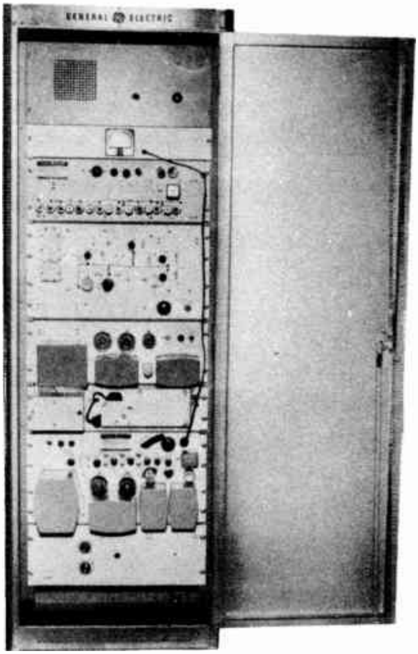

Microwave equipment (front view, door open) for 920 to 960 mc fixed point-to-point relay application.
Courtesy General Electric Co.

The equivalent bandwidths assigned prior to modulation to the color-difference signals E_Q' and E_I' are as follows:

Q—Channel Bandwidth
at 400 kc less than 2 db down
at 500 kc less than 6 db down

at 600 kc at least 6 db down

I—Channel Bandwidth

at 1.3 mc less than 2 db down

at 3.6 mc at least 20 db down

The eye cannot see color in small detail and this property of vision is used to advantage in the color television system. As pointed out before, the picture detail in the horizontal direction is determined by the frequency. The higher frequencies reproduce the small detail.

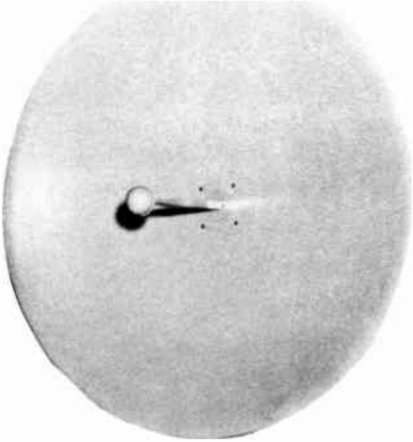

A parabolic antenna of the type used in microwave applications.

Courtesy Workshop Associates, Div. of The Gabriel Co.

Since the eye cannot determine the color of small picture detail, a high frequency chromaticity signal is not necessary. Referring to Figure 11, low-pass filters placed between the attenuator matrix and the modulator block pass only the frequencies required to reproduce a good color picture.

As indicated in Figure 11, the frequencies up to .6 mc or 600 kc of the E_Q color signal are passed to the sine modulator. From the modulator, only the sidebands between 3 and 4.2 mc are passed by the band-pass filter and applied to the transmitter. The E_Q sidebands modulate the main carrier and are shown as the cross-hatched curve in Figure 9.

In like manner, the E_I color signal frequencies from 0 to 1.5 mc modulate the color subcarrier in Figure 11. From the cos modulator, the E_I sidebands between 2 and 4.2 mc are carried by the band-pass filter to the transmitter. These color sidebands modulate the main carrier and are shown by the shaded area between 2 and 4.2 mc in Figure 9A.

As illustrated in Figure 9A, with 3.58 mc subcarrier, the two signals can be transmitted in quadrature phase shift (90°) without crosstalk up to a frequency of .6 mc. Beyond this frequency, the single sideband causes the carrier phase to shift. With two such single sidebands in quadrature, this phase shift introduces spurious signals into each color channel from the other. These spurious signals appear as incorrect color on the edge of objects. In order to prevent this crosstalk between the two color signals, one of the signals is limited to .6 mc.

The angles of the subcarrier measured with respect to the burst phase, when reproducing saturated primaries and their complements at 75 percent of full amplitude, shall be within ±10° and their amplitudes shall be within ±20 percent of the values specified above. The ratios of the measured amplitudes of the subcarrier to the luminance signal for the same saturated primaries and their complements shall fall between the limits of 0.8 and 1.2 of the values specified for their ratios. Closer tolerances may prove to be practicable and desirable with advances in the art.

This standard gives the tolerances on the sub-carrier phase and amplitude. Under the load condition of transmitting saturated primary and complementary colors at 75 percent amplitude, the phase is allowed to vary ± 10 degrees while the amplitude tolerance is ±20 percent. This phase tolerance is somewhat greater than the 5 degree given for the phase of the color sync burst frequency. However, this standard mentions that closer tolerances on the subcarrier phase may be required as equipment and techniques improve.

For color transmission the transfer characteristics (that is the relationship between the transmitter r-f output and video signal input) shall be substantially linear between the reference black and reference white levels.

TELEVISION FREQUENCY ALLOCATIONS

The Federal Communications Commission has allocated eighty-two six-megacycle channels for television broadcasting. The twelve VHF channels are between 54 and 216 mc, and the seventy UHF channels extend from 470 to 890 mc. Channel 1 is no longer available for television, but has been reallocated for other services.

Automatic means shall be provided in the visual transmitter to maintain the carrier frequency within one kilocycle of the authorized frequency; automatic means shall be provided in the aural transmitter to maintain the carrier frequency within four kilocycles of the assigned aural carrier frequency or, alternatively, 4.5 megacycles above the actual visual carrier frequency within five kilocycles. For color transmission the aural carrier shall be maintained 4.5 megacycles above the visual carrier within

±1 kilocycle. When required by §3.606, the visual and aural carrier frequencies are to be offset in frequency by 10 kilocycles (plus or minus, as indicated) from the normal carrier frequencies.

Normally the carrier frequencies are assigned within the channel according to the diagram shown in Figure 1. However, when interference is likely to exist in a fringe area between stations on adjacent channels, the transmitter frequencies are assigned OFFSET above or below the standard by 10 kc. Whether offset or not, the station must remain within 1 kc of the assigned carrier frequencies.

In addition to the eighty-two broadcast channels, listed in this chart, the FCC also assigns auxiliary channels for remote pickups, studio to transmitter (STL), and for intercity television relay. These allocations occur between 1990 and 2120 mc, 6875 to 7050, and from 13025 to 13200 megacycles. Finally, sound channels are provided between 890.5 to 910.5 for relaying the sound portion of a television program or communications relating thereto.

TELEVISION BROADCAST CHANNELS

Channel	Frequency in MC	Channel	Frequency in MC	Channel	Frequency in MC	Channel	Frequency in MC
2	54–60	23	524–530	44	650–656	65	776–782
3	60–66	24	530–536	45	656–662	66	782–788
4	66–72	25	536–542	46	662–668	67	788–794
5	76–82	26	542–548	47	668–674	68	794–800
6	82–88	27	548–554	48	674–680	69	800–806
7	174–180	28	554–560	49	680–686	70	806–812
8	180–186	29	560–566	50	686–692	71	812–818
9	186–192	30	566–572	51	692–698	72	818–824
10	192–198	31	572–578	52	698–704	73	824–830
11	198–204	32	578–584	53	704–710	74	830–836
12	204–210	33	584–590	54	710–716	75	836–842
13	210–216	34	590–596	55	716–722	76	842–848
14	470–476	35	596–602	56	722–728	77	848–854
15	476–482	36	602–608	57	728–734	78	854–860
16	482–488	37	608–614	58	734–740	79	860–866
17	488–494	38	614–620	59	740–746	80	866–872
18	494–500	39	620–626	60	746–752	81	872–878
19	500–506	40	626–632	61	752–758	82	878–884
20	506–512	41	632–638	62	758–764	83	884–890
21	512–518	42	638–644	63	764–770		
22	518–524	43	644–650	64	770–776		

APPENDIX A

FCC STANDARD DEFINITIONS

The following definitions are those given by the FCC and apply to their standards for both color and monochrome signals.

(a) **Amplitude modulation** (AM). A system of modulation in which the envelope of the transmitted wave contains a component similar to the wave form of the signal to be transmitted.

(b) **Antenna height above average terrain.** The average of the antenna heights above the terrain from two to ten miles from the antenna for the eight directions spaced evenly for each 45 degrees of azimuth starting with True North. (In general, a different antenna height will be determined in each direction from the antenna. The average of these various heights is considered the antenna height above the average terrain. In some cases less than 8 directions may be used. See §3.684 (d)).

(c) **Antenna power gain.** The square of the ratio of the root-mean-square free space field intensity produced at one mile in the horizontal plane, in millivolts per meter for one kilowatt antenna input power to 137.6 mv/m. This ratio should be expressed in decibels (db). (If specified for a particular direction, antenna power gain is based on the field strength in that direction only.)

(d) **Aspect ratio.** The ratio of picture width to picture height as transmitted.

(e) **Aural transmitter.** The radio equipment for the transmission of the aural signal only.

(f) **Aural center frequency.** (1) The average frequency of the emitted wave when modulated by a sinusoidal signal; (2) the frequency of the emitted wave without modulation.

(g) **Blanking level.** The level of the signal during the blanking interval, except the interval during the scanning synchronizing pulse and the chrominance subcarrier synchronizing burst.

(h) **Chrominance.** The colorimetric difference between any color and a reference color of equal luminance, the reference color having a specific chromaticity.

(i) **Chrominance subcarrier.** The carrier which is modulated by the chrominance information.

(j) **Color transmission.** The transmission of color television signals which can be reproduced with different values of hue, saturation, and luminance.

(k) **Effective radiated power.** The product of the antenna input power and the antenna power gain. This product should be expressed in kilowatts and in decibels above one kilowatt (dbk). (If specified for a particular direction, effective radiated power is based on the antenna power gain in that direction only. The licensed effective radiated power is based on the average antenna power gain for each horizontal plane direction.)

(l) **Field.** Scanning through the picture area once in the chosen scanning pattern. In the line interlaced scanning pattern of two to one, the scanning of the alternate lines of the picture area once.

(m) **Frame.** Scanning all of the picture area once. In the line interlaced scanning pattern of two to one, a frame consists of two fields.

(n) **Free space field intensity.** The field intensity that would exist at a point in the absence of waves reflected from the earth or other reflecting objects.

(o) **Frequency modulation (FM).** A system of modulation where the instantaneous radio frequency varies in proportion to the instantaneous amplitude of the modulating signal (amplitude of modulating signal to be measured after preemphasis, if used) and the instantaneous radio frequency is independent of the frequency of the modulating signal.

(p) **Frequency swing.** The instantaneous departure of the frequency of the emitted wave from the center frequency resulting from modulation.

(q) **Interlaced scanning.** A scanning process in which successively scanned lines are spaced an integral number of line widths, and in which the adjacent lines are scanned during successive cycles of the field frequency.

(r) **Luminance.** Luminous flux emitted, reflected, or transmitted per unit solid angle per unit projected area of the source.

(s) **Monochrome transmission.** The transmission of television signals which can be reproduced in gradations of a single color only.

(t) **Negative transmission.** Where a decrease in initial light intensity causes an increase in the transmitted power.

(u) **Peak power.** The power over a radio frequency cycle corresponding in amplitude to synchronizing peaks.

(v) **Percentage modulation.** As applied to frequency modulation, the ratio of the actual frequency swing to the frequency swing defined as 100 percent modulation, expressed in percentage. For the aural transmitter of television broadcast stations, a frequency swing of ±25 kilocycles is defined as 100 percent modulation.

(w) **Polarization.** The direction of the electric field as radiated from the transmitting antenna.

(x) **Reference black level.** The level corresponding to the specified maximum excursion of the luminance signal in the black direction.

(y) **Reference white level of the luminance signal.** The level corresponding to the specified maximum excursion of the luminance signal in the white direction.

(z) **Scanning.** The process of analyzing successively, according to a predetermined method, the light values of picture elements constituting the total picture area.

(aa) **Scanning line.** A single continuous narrow strip of the picture area containing highlights, shadows, and half-tones, determined by the process of scanning.

(bb) **Standard television signal.** A signal which conforms to the television transmission standards.

(cc) **Synchronization.** The maintenance of one operation in step with another.

(dd) **Television broadcast band.** The frequencies in the band extending from 54 to 890 megacycles which are assignable to television broadcast stations. These frequencies are 54 to 72 megacycles (channels 2 through 4), 76 to 88 megacycles (channels 5 and 6). 174 to 216 megacycles (channels 7 through 13), and 470 to 890 megacycles (channels 14 through 83).

(ee) **Television broadcast station.** A station in the television broadcast band transmitting simultaneous visual and aural signals intended to be received by the general public.

(ff) **Television channel.** A band of frequencies 6 megacycles wide in the television broadcast band and designated either by number or by the extreme lower and upper frequencies.

(gg) **Television transmission standards.** The standards which determine the characteristics of a television signal as radiated by a television broadcast station.

(hh) **Television transmitter.** The radio transmitter or transmitters for the transmission of both visual and aural signals.

(ii) **Vestigial sideband transmission.** A system of transmission wherein one of the generated sidebands is partially attenuated at the transmitter and radiated only in part.

(jj) **Visual carrier frequency.** The frequency of the carrier which is modulated by the picture information.

(kk) **Visual transmitter.** The radio equipment for the transmission of the visual signal only.

(ll) **Visual transmitter power.** The peak power output when transmitting a standard television signal.

IMPORTANT DEFINITIONS

In addition to the definitions given by the FCC as listed in Appendix A, the following terms are important to know:

BLACK LEVEL—The reference level of a video signal amplitude which cuts off the electron beam and causes the picture tube screen to become dark.

EQUALIZING PULSES—Narrow pulses occurring during vertical blanking interval to provide good interlace.

GUARD BAND—The band between two adjacent channels in which no transmission takes place to prevent interference.

HORIZONTAL BLANKING PULSE—The pulse which blanks out the camera and picture tube screens during the horizontal retrace interval.

HORIZONTAL SYNC PULSE—The pulse which triggers the horizontal deflection generators at the transmitter and receiver to keep them synchronized.

RASTER— [RAS ter] —The pattern formed on the picture tube screen without modulation.

ULTRA BLACK—That portion of the modulation signal above the black level which has no effect on the receiver image.

VERTICAL BLANKING PULSE—The pulse which blanks out the camera and picture tube screens during the vertical retrace interval.

VERTICAL SYNC PULSE—The pulse which triggers the vertical deflection generators at the transmitter and receiver to keep them synchronized.

STUDENT NOTES

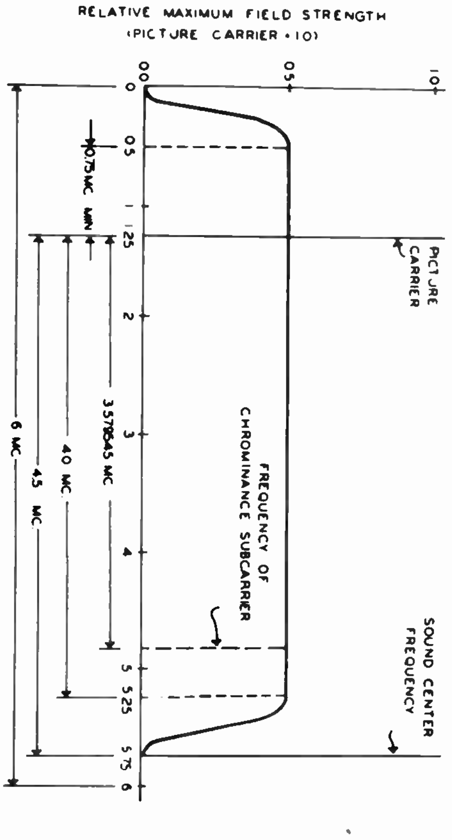

FIGURE 1

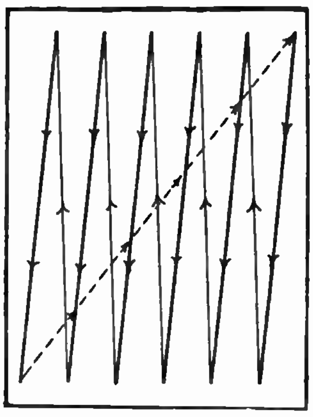

FIGURE 2

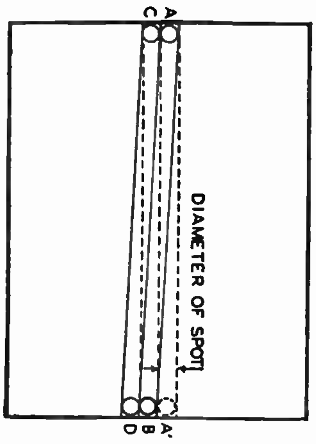

FIGURE 3

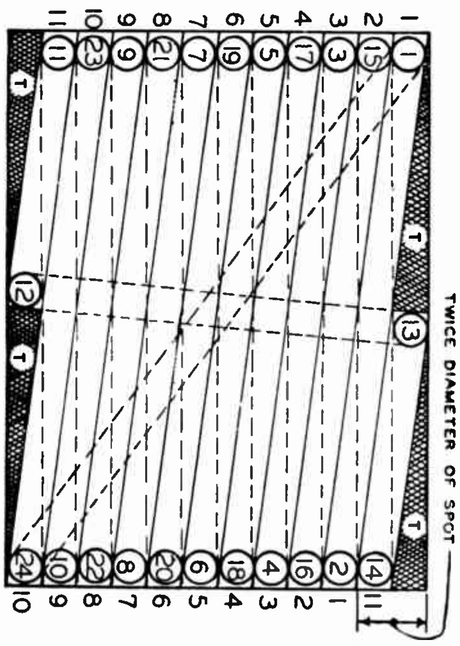

FIGURE 4

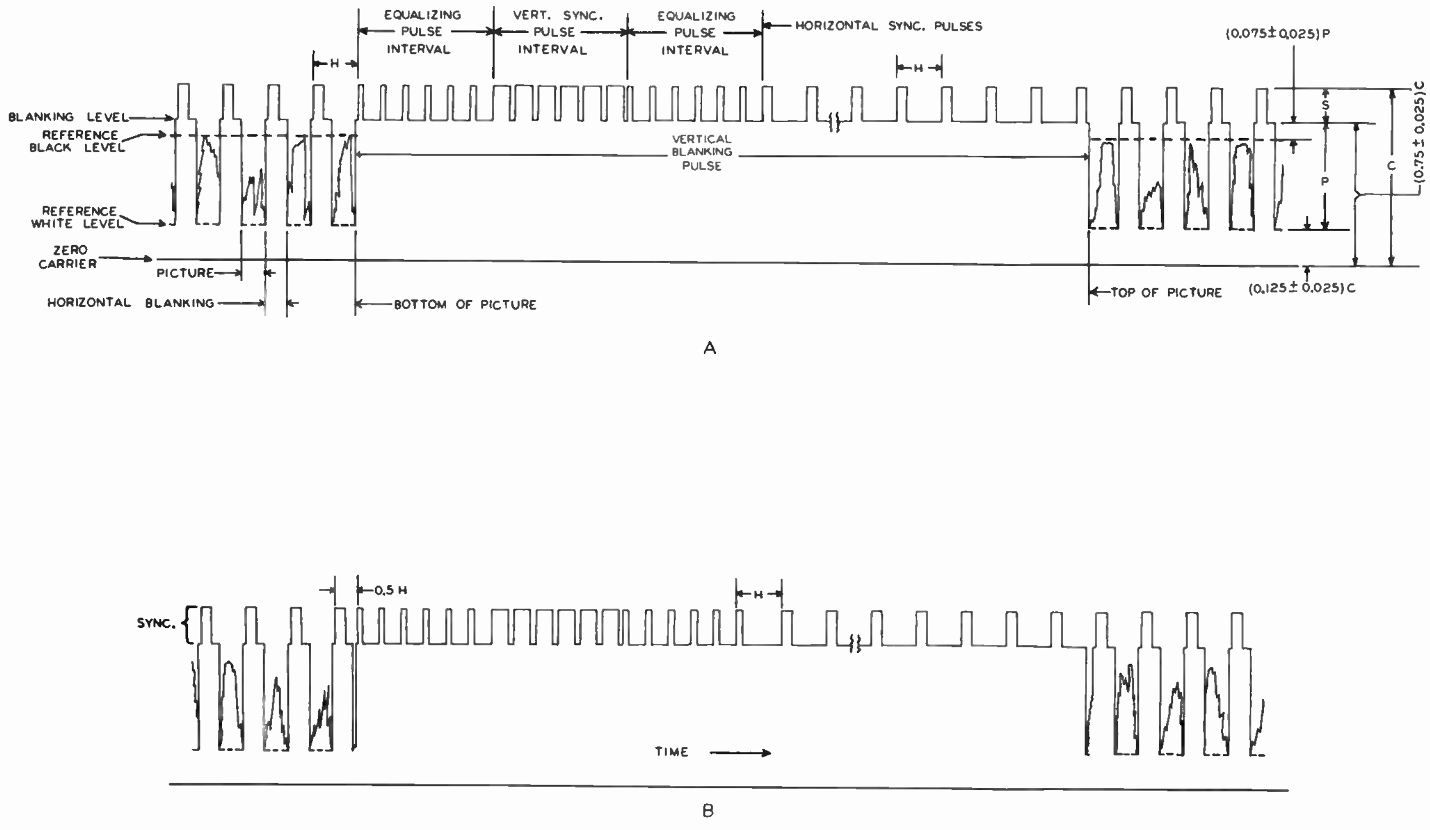

A

B

FIGURE 5

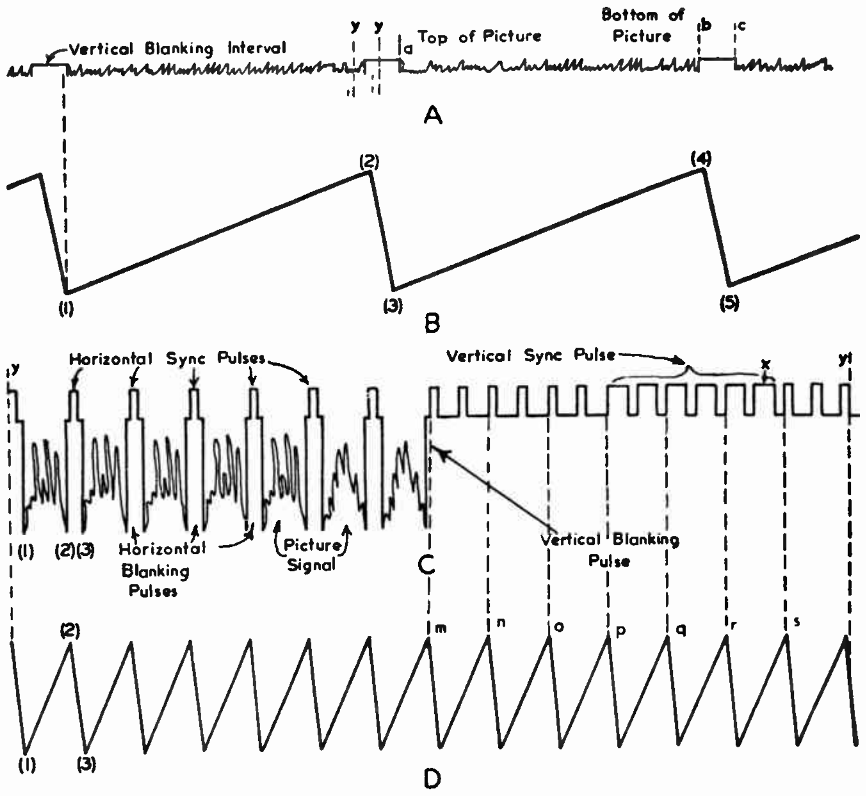

FIGURE 6

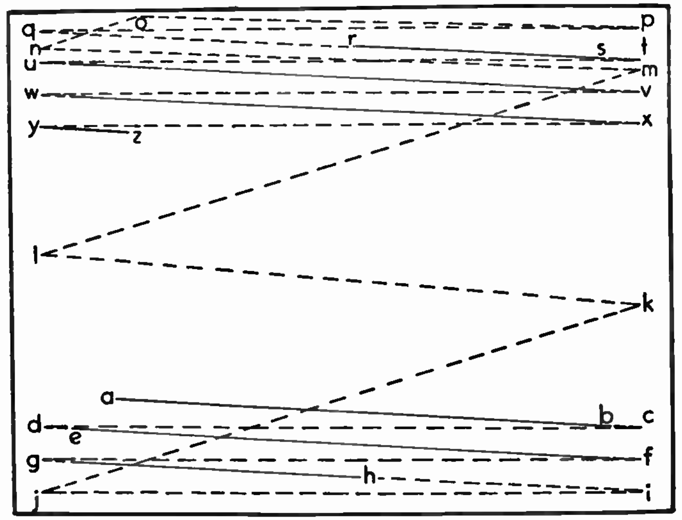

FIGURE 7

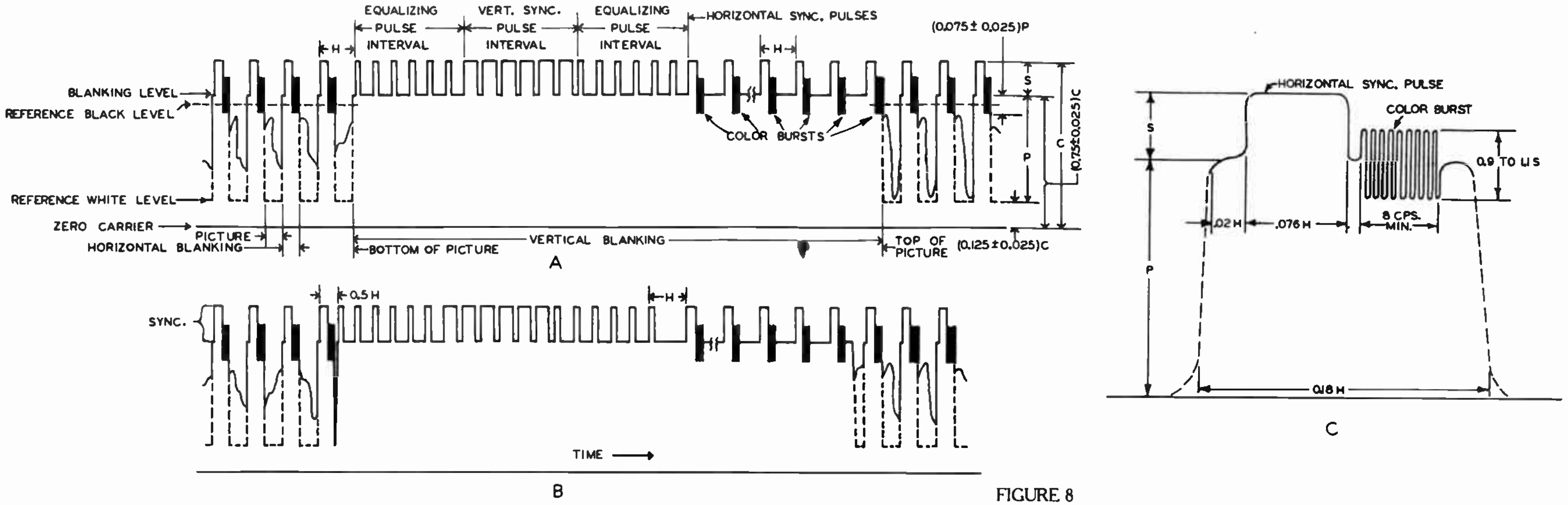

FIGURE 8

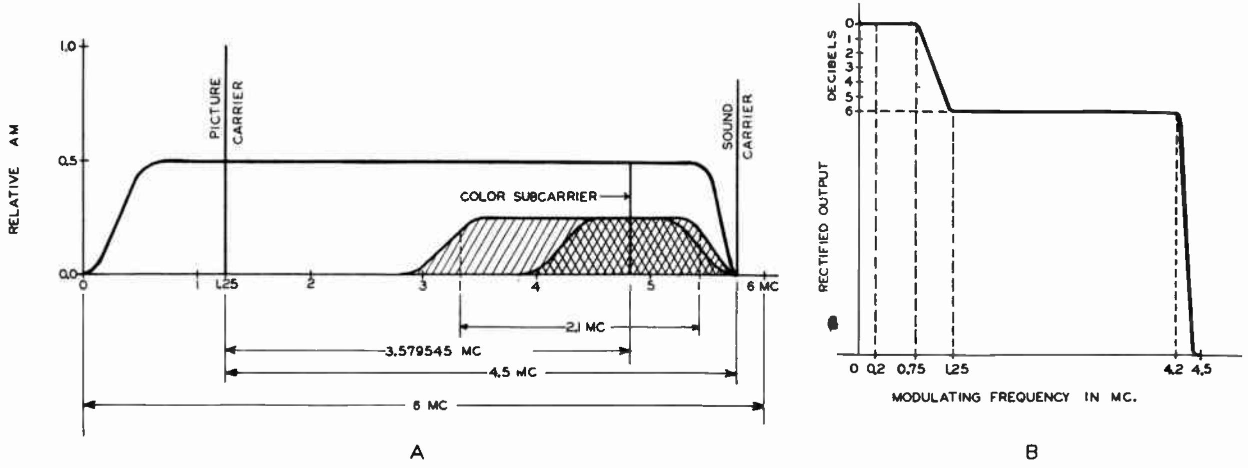

FIGURE 9

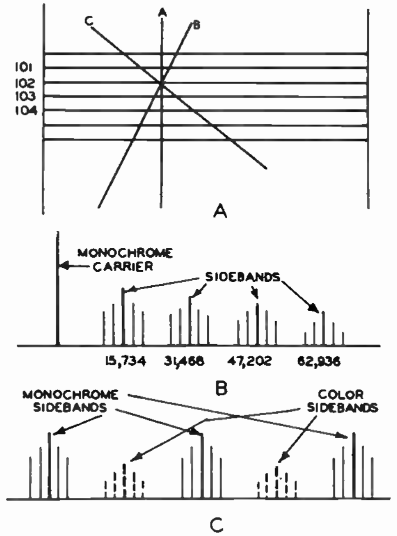

FIGURE 10

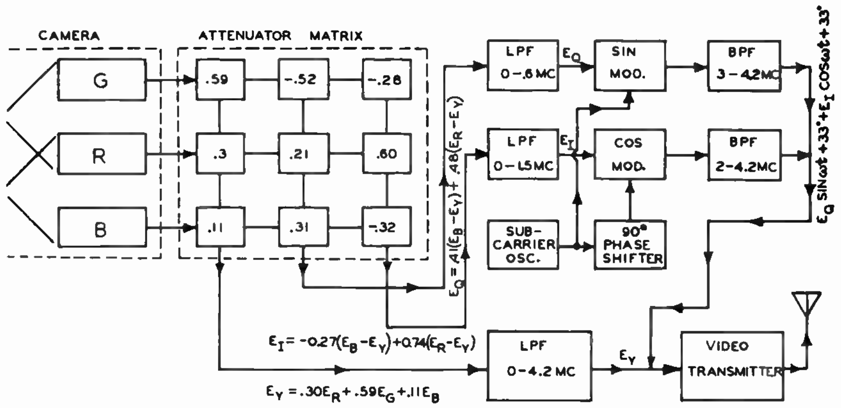

FIGURE 11

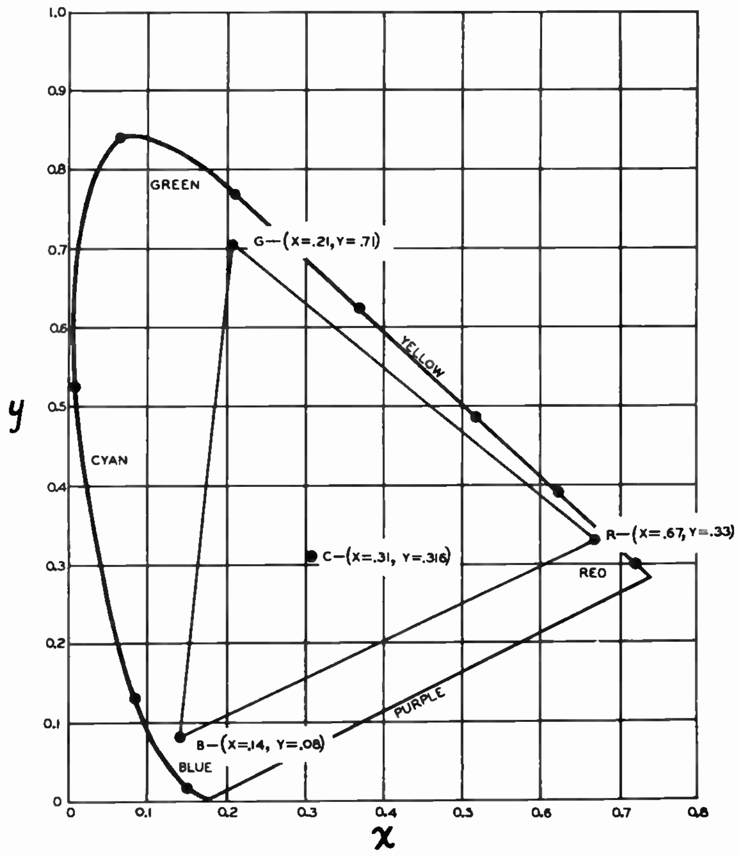

FIGURE 12

DeVRY Technical Institute

Formerly DeFOREST'S TRAINING, INC.

4141 WEST BELMONT AVENUE CHICAGO 41, ILLINOIS

QUESTIONS

FCC Television Standards—Lesson TPC-12B

4

How many advance Lessons have you now on hand?..........................

Print or use Rubber Stamp.

Name.. Student No. ....

Street...Zone......................... Grade...............................

City...State............................... Instructor.........................

Write your answers on the "Ans." line below each question. If more space is needed use reverse side of this page.

1. **Why are television standards necessary?**

Ans...

2. **What is the width of the standard television broadcast channel?**

Ans...

3. **If a television broadcast station transmits the video signals in channel 9, (186-192 mc), what is the center frequency of the aural (sound) transmitter?**

Ans...

4. **What is the standard number of scanning lines per frame?**

Ans...

5. **What is meant by the term "aspect ratio"?**

Ans...

6. **In the standard television system, does an increase in initial light intensity cause an increase or decrease in radiated power?**

Ans...

7. **What is the purpose of blanking pulses in a television broadcast and receiver system?**

Ans...

8. **Are horizontally or vertically polarized waves employed in standard television broadcasting?**

Ans...

9. **In a color television signal, where are the color synchronizing bursts located?**

Ans...

10. **How many channels are allocated for television broadcasting?**

Ans...

FROM OUR *Director's* NOTEBOOK

SINCERITY

I invariably start toward the door when a salesman, whom I've never seen before in my life, begins with:

"Now for YOU, I think I can shade that price—"

My wife tells me that she never buys a hat about which some saleswoman practically swoons in synthetic admiration and gushes—"my DEAR, it's PERfectly GORgeous—it's MADE for you—it's SIMply OUT of this WORLD!"

Why, oh WHY can't people whose jobs keep them in constant contact with the public, learn that the rarest and most valuable asset they may have is plain, Unaffected and Unadulterated Sincerity?

IN-sincerity fools no one but the Dull-witted.

I would greatly dislike to think that the Stupid and the Gullible are in the majority among us.

Why, then, not create the impression we most want to make by speaking and acting with True and Believable Sincerity?

Yours for success,

W. C. DeVry

DIRECTOR

PRINTED IN U.S.A.

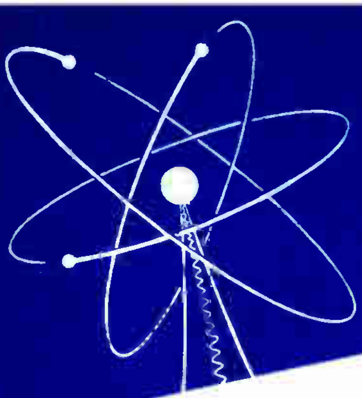

SYNCHRONIZATION

Lesson TPC-13A

-13

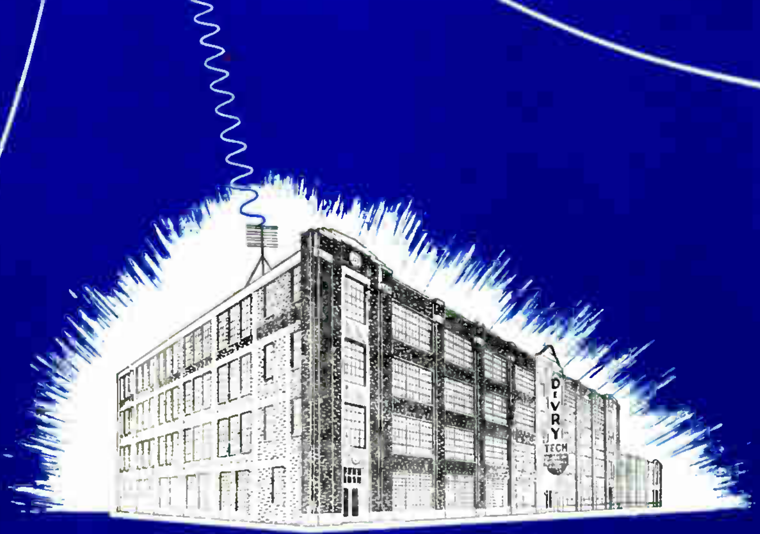

DeVRY Technical Institute

4141 W. Belmont Ave., Chicago 41, Illinois
Formerly DeFOREST'S TRAINING, INC.

TPC-13A

SYNCHRONIZATION

ELECTRONICS TELEVISION
DTI
DeVRY Technical Institute

4141 Belmont Ave.
Chicago 41, Illinois

Due to the effective AFC circuits used in modern television receivers only two pairs of knobs are needed on the front panel. The hold controls are so rarely used that they are placed in back or recessed behind the name plate.

Courtesy Stewart Warner Corp.

Television

SYNCHRONIZATION

Contents

MEN ARE FOUR

He who knows not and knows not he knows not,
is a fool—shun him;
He who knows not and knows he knows not,
is simple—teach him;
He who knows and knows not he knows,
is asleep—wake him;
He who knows and knows he knows,
is wise—follow him.

—Ancient Proverb

SYNCHRONIZATION

In many cathode ray tube applications, the sweep of the electron beam across the screen must be held in step or **synchronized** with the electric variation being observed. To achieve this synchronization, a part of the input signal is applied to the deflection voltage generator in such a way as to initiate the sweep cycle. Often, the voltage pulse that is to be used for synchronizing the deflection generator is a part of a rather complex wave, and must be removed from the rest of the wave to secure proper operation of the synchronizing circuits.

In television, synchronization is needed because the horizontal and vertical motions of the receiver cathode ray tube electron beam must be exactly in step with the television camera tube electron beam, if the transmitted image is to be reproduced on the receiver screen.

To achieve this synchronization, pulses are transmitted along with the picture or video signals as shown in Figure 1A. Here, the jagged line along the bottom represents the picture detail, the wide rectangular pulses extending upward from the axis represent blanking pulses that extinguish the spot of light on the screen during the retrace interval, and the narrow pulses on top of the blanking pulses represent the sync pulses.

SYNC PULSE CLIPPERS

Circuits designed for the purpose of removing the sync pulses from the complex wave are known variously as SYNC DETECTORS or **sync pulse clippers.** However, to prevent confusion with conventional detectors or the filter circuits that may later separate sync pulses of different lengths, only the term "sync pulse clipper" is employed in this text. Two general types of sync pulse clippers are in present use: (1) the grid leak (triodes or pentodes) and (2) the diode.

Grid Leak Sync Clippers

The schematic diagram of a grid leak type triode sync clipper shown in Figure 1B is a limiter circuit with the cathode at ground potential, grid leak bias, and a comparatively low positive plate voltage. Applied to the grid, input signal e_I must have the polarity shown in Figure 1A. That is, the sync pulses must be the most positive part of the wave-form. As in all grid leak bias arrangements, the positive peaks of input signal e_I drive the grid positive with respect to the cathode to allow short pulses of cathode-to-grid electron flow.

These pulses of electron flow charge capacitor C_1 to the polarity shown, then during the comparatively long intervals between the input signal positive peaks, C_1 discharges through grid leak resistor R_1. This discharge current develops a d-c voltage drop E_{R_1} such that the grid end of R_1 is negative with respect to the cathode or ground. Since the intervals between the positive peaks of the signal are long compared to the peak duration, most of the time the grid end of R_1 is negative with respect to ground. Thus, the average E_{R_1} is negative, its exact value depending upon the time constant of R_1C_1 and the amplitude of the signal voltage e_I.

As shown by the curve of Figure 1A, the signal voltage e_I varies about an axis or zero voltage and, as it is applied in series with C_1 and R_1, it alternately adds to and subtracts from the capacitor voltage to cause variations of the discharge current in grid resistor R_1. As a result, the wave-form of the instantaneous voltage drop e_g across R_1 will be applied to the tube grid as shown by e_I of Figure 2.

The d-c bias voltage E_{R_1} does not exist in the same form as a d-c battery voltage but rather represents the average of all the instantaneous values of e_g, thus the axis of the input signal e_I coincides with the operating point of the tube.

With values of R_1 and C_1 that produce a comparatively long time constant, the capacitor discharge maintains a relatively constant voltage across resistor R_1 for a period equal to several cycles of the input signal. In order that a voltage corresponding to slightly less than the peak value will drive the grid negative to plate current cutoff, the tube is operated at a low plate voltage. Under these conditions, only the synchronizing pulses reduce the negative grid bias sufficiently to permit pulses of plate current.

As illustrated in Figure 2, this arrangement provides plate current pulses of the same wave-form as the incoming synchronizing pulses. In any resistance coupled stage the plate voltage is 180 degrees out of phase with the plate current, therefore, as shown in the right of Figure 1C, the output voltage e_o will consist of the inverted synchronizing pulses.

Thus, the grid leak type of sync pulse clipper consists of a limiting tube with the circuit and input signal adjusted so that the "clip-level" falls near the base of the sync pulses of the complete wave. Consequently, only the most positive portions of the complete signal, the synchronizing pulses, are able to produce plate current and appear in the output circuit.

Diode Sync Pulse Clipper

Figure 3 is a schematic diagram of the diode type sync pulse clipper arranged to emphasize the likeness between it and the grid leak circuit of Figure 1B. When grid current occurs in a triode or pentode tube circuit, the effect often is referred to as the "diode action" between cathode and grid. Considering the circuit of Figure 3, the diode current develops a "bias" voltage across the resistor R in the same way that the voltage E_{R_1} is produced in Figure 1B.

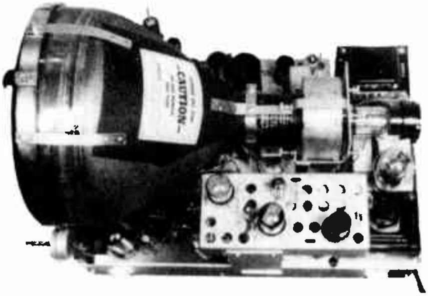

The top view of a television receiver chassis. A small chassis mounted near the lower edge of the main chassis contains the "sync amp," the "sync osc," and the "sync disc."

Courtesy Farnsworth Television & Radio Corp.

To review the diode action, during the positive alternations of the input voltage e_I in Figure 3, the cathode-to-plate electron flow charges capacitor C to the polarity shown. Between these positive peaks, the charge on C leaks through resistor R to produce a voltage drop which causes the plate end of R to be negative with respect to ground.

In order to pass only the synchronizing pulses of the input voltage e_I, the circuit must function as a diode limiter with a clip level at the point indicated by the dotted line. As in the circuit of Figure 1B, the bias E_R in Figure 3 is dependent upon the amplitude of the input signal e_I and the time constant of R and C. Thus, by using relatively large values of R and C, and properly adjusting the amplitude of e_I, the voltage E_R can be made such that the diode plate is biased to or above the clip level.

Because of the negative bias E_R, the diode is nonconductive except during the intervals of the highly positive sync pulses and thus only these pulses cause diode current. During these synchronizing intervals, the electron flow through the low resistance of the diode and load resistor R_L is sufficiently large to recharge capacitor C by an amount equal to that which leaks off through R between pulses.

Developed by the diode current through the load resistor R_L, the output signal voltage e_o has the shape of the sync pulses. However, neither inversion nor amplification takes place. As in any diode circuit, part of the input signal is dropped across the tube, consequently the amplitude of the sync pulses in the diode clipper output is somewhat less than in the input. When the input to the circuit is sufficiently high, the diode clipper often is preferred since its output voltage wave-form contains less distortion than that of the triode or pentode types.

SYNC PULSE SEPARATION

For simplicity sake, the drawings of Figures 1A, 2, and 3 indicate that the complete input wave contains but one type of sync pulse. However, in television such is not the case.

Three distinct types of synchronizing pulses are transmitted along with the picture signals and blanking pulses.

Although these sync pulses are of the same magnitude, they are of different durations. Therefore, when applied to an RC filter circuit known as a **sync pulse separator,** the pulses are segregated according to their duration and applied to the proper deflection generator to maintain a constant frequency relation between the generator output and the appropriate sync pulses.

In a standard television signal, a 5 microsecond long pulse is used for synchronizing the horizontal deflection generator, the oscillation frequency of which is 15,750 cycles per second, and a 190 microsecond long pulse is employed for synchronizing the vertical deflection generator, the oscillation frequency of which is 60 cycles per second. Groups of six 2.5 microsecond long pulses placed before and after the vertical sync pulses, insure proper synchronization of the vertical oscillator.

Differentiating Circuit

To separate or segregate the higher frequency horizontal sync pulses from the lower frequency vertical sync pulses, it is customary to employ a high pass or DIFFERENTIATING NETWORK like Figure 4A. With this arrangement, the composite wave containing all three kinds of sync pulses is impressed across the series RC circuit, with the output appearing across the resistor. Figure 4B represents the narrow horizontal sync pulses, while Figure 4C represents the long vertical sync pulse. To maintain synchronization of the horizontal oscillator during the vertical sync pulse interval, this long pulse is broken up by SERRATIONS into a number of closely spaced pulses which are longer than the horizontal sync pulses.

For proper operation of the differentiating network, the resistance and capacitance are chosen so that the time constant is relatively short in comparison with the duration of horizontal pulses. That is, the t/T ratio is large. Hence, the capacitor can charge and discharge rapidly so that, appearing across the resistor, output voltage E_R has a wave-form of the sharp pointed pulses illustrated in Figures 4D and 4E.

Due to the short RC time constant, the action of the filter circuit is the same for the widely spaced, narrow pulses of Figure 4B, and the closely spaced, wider pulses of Figure 4C. In either case, the output waves are about alike and of the proper shape to control the horizontal deflection voltage generator circuits which, in television receivers, operate in such a way that their oscillations take place only at, or very near the frequency to which they are "tuned."

The horizontal deflection oscillator is adjusted to operate at the frequency of the horizontal sync pulses of Figure 4B, but as the pulses of Figure 4E occur at twice this frequency, only every other "pip" controls the horizontal oscillator. Known as EQUALIZING PULSES, the 2.5 microsecond pulses which occur immediately before and after the vertical sync pulses also have twice the frequency of the horizontal pulses.

At the output of the filter their wave-form is similar to those of Figure 4D, but, occurring at twice the sweep frequency. Only every other pulse "trips" the horizontal oscillator. Thus, although several sync signals are being received, the output of the filter of Figure 4A provides continuous control of the horizontal deflection voltage generator.

As it was pointed out earlier, in order for the differentiating circuit to function as explained for Figure 4, it is necessary that its RC time constant be relatively short, a recommended value being one-half of one percent of the interval between pulses. Because of the loading effect on the tube circuits to which they are connected, some receiver designs employ more than one such RC circuit, each of which has a somewhat longer time constant so that the differentiation of the synchronizing pulses is accomplished by the combined action of the several filters.

Insofar as the time constant alone is concerned, it can be obtained by the use of small R and C, a medium R with a very small C, or a medium C with a very small R. The final choice depends to some extent upon the circuits in which the differentiating network is contained.

Integrating Circuit

For separating the low frequency vertical sync pulses from the high frequency horizontal sync pulses, the low pass or integrating network shown in Figure 5A may be employed. With this arrangement, the composite sync signal is impressed across the series RC circuit, and the output appears across the capacitor. As in the case of the differentiating circuit, the desired operating characteristics are obtained by using the correct t/T ratio.

In order to separate the horizontal sync pulses shown in Figure 5B from the vertical pulse of Figure 5C, this t/T ratio should be about five by making the time constant approximately one-fifth of the vertical pulse duration.

The sync signal input to the integrating circuit contains both the horizontal pulses, Figure 5B, and the vertical pulses, Figure 5C. When a narrow horizontal pulse is applied to the filter, the capacitor begins to charge through the resistor, as shown in Figure 5D. However, before the charge becomes very high, the trailing edge of the input pulse arrives and the capacitor discharges completely before the next pulse arrives.

On the other hand, when a wide vertical pulse is applied to the RC network, the capacitor is charged for a longer period of time and therefore to a higher potential, as shown from points 1 to 2, Figure 5E. During the short gap or **serration** between the first and second parts of the vertical pulse, the capacitor discharges to a slightly lower potential, points 2 to 3, but the following pulse causes it to charge from point 3 up to point 4.

Again it discharges slightly between pulses and is then charged further by each succeeding segment of the vertical pulse. Because of the relatively long duration and close spacing of these segments of the vertical sync pulse, during the vertical synchronizing pulse interval the capacitor is charged more than it is allowed to discharge. As a result the capacitor voltage builds up until it reaches a maximum, such as point X in Figure 5E, just at the end of the vertical sync pulse. Between pulses it is allowed to discharge to the zero level.

A control on the front panel of the oscilloscope provides selection between three sources of voltage to synchronize the horizontal sweep oscillator.

Courtesy Allen B. DuMont Labs., Inc.

In television, the group of six segments which constitute the vertical sync pulse occur once every 60th of a second, thus the wave of Figure 5E is produced every 60th of a second and, in the form of one large pulse, may be used to synchronize the vertical deflection voltage generator. As shown by the curve of Figure 5D, the voltages produced across the capacitor by the horizontal synchronizing pulses are of relatively low amplitude and, therefore, have little or no effect on the vertical oscillator.

So far as vertical synchronization is concerned, the separate pulses of Figure 5C could be combined into one long pulse which would eliminate the serrations of Figure 5E. However, while they have no function in the vertical deflection circuit, these interruptions are necessary to maintain synchronization of the horizontal oscillator during the vertical synchronizing interval, as explained for Figure 4C.

CLIPPER AND SEPARATOR CIRCUITS

The schematic diagram of Figure 6 is a practical circuit employed to clip and separate sync pulses in a television receiver. V_1 is the video detector which is connected so as to deliver a negative signal to the grid of tube V_2 as shown by the wave-form at the lower left of the Figure. Connected between V_1 and its load resistor R_1, the low-pass filter L_1, C_1, L_2, and C_2 maintains the detector frequency response constant up to about 4 mc.

Series compensated by L_3 and R_3, and shunt compensated by L_4, V_2 amplifies the complete or composite video signal and applies it through capacitor C_6 to the cathode of the picture tube as indicated at the upper center of Figure 6. Appearing at the junction of L_4 and R_4 as well as on the V_2 plate and picture tube cathode, the V_2 output has the wave-form shown above V_2.

From the L_4R_4 junction, the composite video signal is applied through isolation resistor R_8 and coupling capacitor C_7 to the V_3 control grid. In this control grid circuit, C_7 and R_9 form a differentiating network similar to the one of Figure 4A. However, the RC time constant must be very long so that the shape of the composite video wave-form is not changed. Operated with very low plate and screen grid voltages because of voltage divider $R_{10}R_{12}$, and with grid leak bias developed across R_9, V_3 functions as a grid leak type clipper to remove the sync pulses from the applied signal.

During the synchronizing intervals, the sync pulses drive the V_3 control grid positive, causing a grid current that quickly charges C_7 to the input peak value. Between sync pulses, the long R_9C_7 time constant keeps the capacitor from discharging appreciably and the negative d-c voltage developed across R_9 remains essentially constant nearly equal to the peak value of the pulse.

Due to the very low plate and screen grid potentials, plate current cutoff is reached with a low negative grid bias. Thus, V_3 is biased well beyond cutoff so that only the sync pulse tips can overcome the bias and cause plate current. The resulting plate voltage wave-form consists of negative pulses as shown by the wave-form at the upper right. Although not shown in Figure 6, the vertical sync and equalizing pulses, as well as the horizontal sync pulses are present in the composite video wave. All three are clipped and amplified by V_3, appear in its plate circuit as negative pulses. Applied to RC circuits where they are separated, these horizontal and vertical pulses are applied to the respective deflection generators. Resembling the circuit of Figure 4A, the short RC time constant differentiating network, $C_{10}R_{13}$ in the grid circuit of V_4, changes the rectangular pulses into peaked pulses or "pips" which then are amplified by V_4, the output wave-form of which is indicated.

The amplitude difference between the positive and negative pips of the output is due to the fact that V_4 is operated without fixed bias. At the beginning of the sync pulse, the sudden drop of V_3 plate potential causes C_{10} to discharge rapidly through R_{13}, producing a large negative "pip" on the V_4 grid. When the V_3 plate voltage rises suddenly at the end of the sync pulse, the grid of V_4 is driven positive and grid current rapidly charges C_{10}. However, due to the very low cathode to grid resistance when there is grid current, the positive pip is of very small amplitude. Amplified and inverted by tube V_4, the differentiated sync pulse consists of a large amplitude positive pip and a low amplitude negative pip as shown.

Coupled through the d-c blocking capacitor C_9, the composite sync signal is applied also to the input of the three section RC integration network $R_{14}C_{11}$, $R_{15}C_{12}$ and $R_{16}C_{13}$. The output of this network is amplified by V_5 and applied to the vertical deflection generator. By using three of the Figure 5A networks connected end to end, the integration network of Figure 6 filters out all traces of the horizontal sync and equalizing pulses as well as most noise signals that could cause improper operation of the vertical deflection generator.

Completing the V_5 grid circuit, R_{17} is returned to the plate supply source so as to provide a path for discharging the network capacitors quickly. At first glance it might seem that the V_5 control grid is at the plate supply potential. However, with the grid positive to the cathode there is grid current and the resulting voltage drop across R_{17} reduces the grid voltage. In practice, R_{17} is large and the drop across it almost neutralizes the plate supply voltage so that the grid is only slightly positive to the cathode.

The horizontal sync pulses that are applied to the first section of the Figure 6 integration network cause C_{11} to charge slightly as explained for the circuit of Figure 5A and illustrated in Figures 5B and 5D. However, in this case, the pulses are negative and Figures 5B and 5D should be inverted to show the true C_{11} wave-form. The C_{11} voltage is applied to the second section, charging C_{12} to a small portion of the C_{11} voltage. Applied to the third section, the C_{12} voltage charges C_{13} slightly. In practice, the input pulse amplitude is kept relatively small, so that the horizontal sync pulses have practically no effect on the C_{13} charge.

This signal generator provides a horizontal syn voltage for synchronizing the sweep generators of the oscilloscope used with it during receiver alignment.

Courtesy Triplett Electrical Instrument Co.

During the vertical synchronizing interval, the six comparatively long pulses applied to the network input charge C_{11} as explained for Figure 5A and illustrated by Figures 5C and 5E. Here again, the curves of Figures 5C and 5E must be inverted to show the true waveforms of Figure 6. Applied to the second section, the C_{11} voltage charges C_{12} and, in turn, C_{13}. Because of the RC time constants, the charge on C_{13} is considerably lower than on C_{11} but the unevenness due to the serrations has been almost completely removed.

To insure proper synchronizing of the vertical deflection oscillator, the trailing edge of the C_{13} voltage pulse is steepened through the action of R_{17}. At the end of the vertical sync interval, the excess electrons on the ungrounded plates of C_{11}, C_{12}, and C_{13}, flow through R_{17}, R_{12} and the low B+ supply to ground and from ground to the lower capacitor plates, thus discharging the capacitors very rapidly. The integrated vertical sync pulse is amplified by V_5, then with the wave-form shown above C_{14}, the pulse is applied to the grid of a blocking oscillator type of deflection generator.

AUTOMATIC FREQUENCY CONTROL

In the operation of many types of electron apparatus employing cathode ray tubes, the horizontal and vertical deflection generators are adjusted to natural or free-running frequencies that are slightly lower than the frequency of the signal being displayed. Then, the synchronizing pulses initiate or "trigger" each generator cycle slightly before it would occur naturally, and thus, increase the deflection generator frequencies to the exact synchronous value. Often, the sync pulses are wiped out either by an excess of noise signal or by the complete loss of the desired signal. In either event, the deflection generators will drop out of synchronism with the signal being observed.

Employing a new principle of synchronization, a number of circuits have been developed to maintain the correct sweep frequency by averaging several regularly recurring sync pulses. Known by such names as **automatic frequency-phase control, automatic sync control,** and **horizontal afc,** their use results in greatly improved performance especially in locations where severe noise interference exists or where the signal strength is weak.

With circuits of this type, the received sync pulses and either a sine or sawtooth wave-form from the deflection generator are applied to a sync discriminator, the output of which is connected to an oscillator frequency control circuit. When the oscillator frequency and phase depart slightly from those of the sync pulses, a resulting d-c voltage varies the oscillator frequency until the proper phase relations are re-established.

SINE WAVE AFC SYSTEM

Figure 7 is a block diagram of the essential elements of the sine wave type automatic frequency control (afc) system. After removing the sync pulses from the complete video signal, the sync clipper passes them on to one input of the sync discriminator. As shown, the second input of the sync discriminator receives a voltage from the horizontal sweep oscillator.

Operating in a manner similar to that of the discriminator used in FM radio receivers, the sync discriminator employs two diodes connected so that when the applied sync pulses and the oscillator voltage have the correct phase relations, there is no d-c output, but when the oscillator frequency changes, a d-c voltage is produced and applied to the reactance tube.

Connected across the horizontal sweep oscillator tuned circuit, the reactance tube functions as an inductance, which varies in value over a narrow range with a change in bias voltage. Thus, by changing the d-c voltage on the reactance tube grid, the horizontal sweep oscillator frequency may be altered. When the circuit is connected properly, this action tends to bring the oscillator frequency back to the proper phase relation with the sync pulses and thus automatically reduces the discriminator d-c output to zero.

The Sync Discriminator

A schematic diagram of the circuit represented by the sync discriminator block of Figure 7 is shown in Figure 8A. The sync clipper output is applied across resistor R_3 which is indicated as the "sync input." The sine wave output of the horizontal sweep oscillator is applied across resistors R_1 and R_2 in series which are indicated as the sine wave input. The output of the discriminator, developed across resistors R_4 and R_5 in series and indicated as e_o, is applied to the reactance tube circuit.

The sync input develops corresponding pulses of voltage across R_3 which, when negative at the point (2) end causes a flow of electrons. There are two electron paths, one through R_4, V_1, and R_1 and the other through R_5, V_2, and R_2. In practice, V_1 is the same type of tube as V_2, R_4 equals R_5, and R_1 equals R_2, so that the electron flow in both paths will be equal.

Under these conditions the drop across R_4 equals the drop across R_5 but the polarities are opposite. For R_4, point (1) will be positive with respect to point (2), while for R_5, point (3) will be positive with respect to point (2). Measured between points (1)—(3), these equal voltages oppose each other so that e_o is zero.

In cases of this kind, the total voltage is the algebraic sum of the separate voltages. If the separate voltages are series opposing, the algebraic sum is equal to the arithmetical difference, and as explained for Figure 8A, the algebraic sum of the voltage drops across R_4 and R_5 is zero. This action occurs for all input voltages which cause the point (2) end of R_3 to be negative with respect to its other end. Input pulses which cause the point (2) end of R_3 to be positive have no effect as electrons cannot flow through the diodes V_1 and V_2 from plate to cathode.

Neglecting for the moment the voltage across R_3, the sine wave of the oscillator is applied across resistors R_1 and R_2 in series to develop a corresponding a-c voltage drop across them. During one alternation the V_1 plate is positive with respect to the V_2 plate. During the following alternation, the V_2 plate is positive with respect to the V_1 plate. This complete reversal of polarity occurs for each alternation of the input voltage.

During the alternations that the V_1 plate is positive, electrons flow from the junction of R_1 and R_2, through R_3 to point (2), through R_4 to point (1) and through V_1 from cathode to plate, back to R_1. At this time, the V_2 plate is negative with respect to its cathode, therefore it is nonconductive. With nothing but resistance in the circuit, the current will vary directly with the applied voltage, therefore, the drop across R_4 has the same wave-form as one alternation of the input voltage. With no current in R_5, and therefore no voltage drop across it, the output voltage e_o is essentially the same as that across R_4.

Reviewing the action for a complete cycle, while V_1 is conductive, points (2) and (3) are at the same potential and negative with respect to point (1). While V_2 is conducting, points (1) and (2) are at the same potential and negative with respect to point (3). Thus the wave-form of the output voltage e_o is a replica of the a-c input voltage applied across resistors R_1 and R_2.

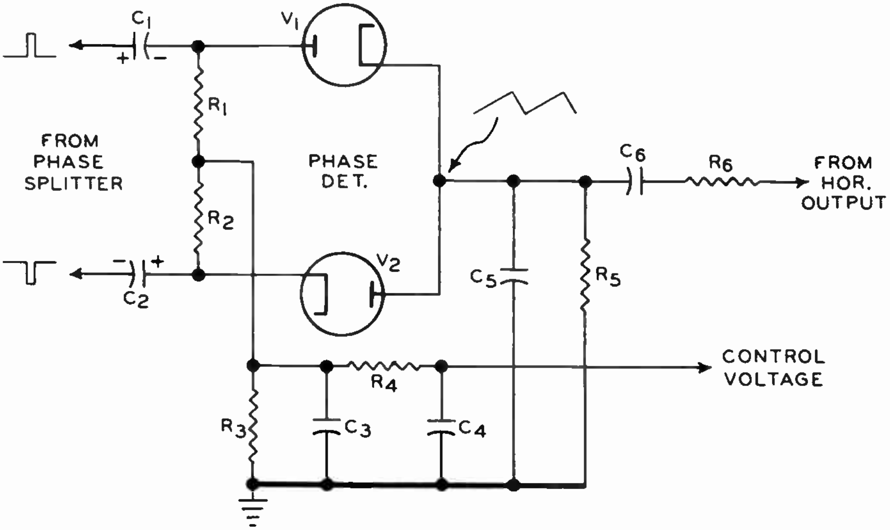

A variation of the phase detector shown in Figure 11. The sync pulses are obtained from a phase splitter amplifier and the sawtooth voltage is applied directly to the V_1 cathode and the V_2 plate. The control voltage is developed across R_3 and filtered by $C_3R_4C_4$.

During the alternations that the V_2 plate is positive, electrons flow from the junction of R_1 and R_2 through R_3 to point (2), through R_5 to point (3), and through V_2 from cathode to plate, back to R_2. At this time the V_1 plate is negative with respect to its cathode and, therefore, is nonconductive. As explained for R_4, during these alternations the drop across R_5 has the same wave-form as the input voltage but there is no drop across R_4.

Earlier in this explanation, it was stated that the discriminator output was d-c and to obtain this result, capacitors are connected across resistors R_4 and R_5 as shown in Figure 8B. Due to the rectifying action of the diodes, the polarity of the voltage drop across each resistor does not change. Therefore, after a few cycles of the sine wave input, the conduction of the diodes charges C_1 and C_2 to the polarity indicated.

To charge C_1, electrons flow from the lower input terminal through R_2 and R_3 to the negative plate of capacitor C_1. Leaving the positive plate, the electrons flow through V_1 to the upper input terminal. In a like manner, when V_2 conducts, the electron flow is from the upper terminal through R_1 and R_3 to the negative plate of capacitor C_2, then from the positive plate through V_2 to the lower terminal.

The total resistance in each charging circuit is relatively low, therefore C_1 and C_2 charge quickly to approximately the sine wave peak. The C_1 discharge path is through R_4, while R_5 forms the discharge path for C_2. R_4 and R_5 have relatively high resistances, therefore, once charged, each capacitor discharges only slightly during the intervals when its diode is not conducting.

Thus, the output e_o is equal to the algebraic sum of the two practically constant voltages E_{C_1} and E_{C_2}, and consequently, it is a d-c rather than a-c voltage as in the case of Figure 8A. However, with only the sine wave input applied, each diode conducts equally, E_{C_1} is equal to E_{C_2}, and these two opposing voltages add to make e_o, Figure 8B, equal to zero. Likewise, with only the sync pulses applied, C_1 charges to the same voltage as C_2, and their sum, e_o, is zero.

During actual operation, the sine wave and sync pulse inputs are applied simultaneously and while individually they produce zero output voltage, when combined, there will be zero output only when they are of equal frequencies and proper phase. No matter how carefully it is constructed and tuned, variations of supply voltage or changes of component values due to the differences of temperature cause the frequency of the horizontal sweep oscillator to vary slightly. The purpose of the discriminator is to compare the oscillator output with the sync pulses and convert any variations of frequency or phase into a d-c output voltage of corresponding polarity and amplitude.

To explain this action, the curves of Figure 9 have been drawn to indicate the combined input voltages applied across point (2) of Figure 8 and the plate of each diode. The solid line portions of each curve indicate the alternations during which the diode is conductive while the broken line portions indicate the nonconductive alternations.

In Figure 9A, the oscillator output has drifted in frequency so that the sync pulse is applied at the positive peak of the conductive alternation of diode V_1. Referring to Figure 8B, this added voltage charges capacitor C_1 to a higher potential than is possible with the sine wave alone. For the following alternation of the input cycle, diode V_1 is nonconductive while diode V_2 conducts causing C_2 to be charged by the sine wave only. With C_1 charged to a higher potential than C_2, the output voltage e_o is equal to the difference of potential and point (1) is positive with respect to point (3).

Assume now that the oscillator frequency has drifted so that the sync pulse is applied at the peak of the conductive alternation of diode V_2 as shown in Figure 9B. During the first alternation of this input cycle, capacitor C_1 of Figure 8 charges to the normal sine wave potential but during the second alternation, the added voltage of the sync pulse charges C_2 to a higher potential. The output voltage, e_o, is equal to the difference of these potentials and point (1) is negative with respect to point (3).

When the oscillator frequency is correct in frequency and phase, as shown in Figure 9C, the sync pulse occurs when the sine wave voltage is passing through zero. Under these conditions, equal voltages are applied to the diodes during conductive alternation, capacitors C_1 and C_2 are charged equally and the output voltage remains zero.

Thus, as the oscillator frequency drifts from the correct phase of Figure 9C, toward the extremes of Figures 9A and 9B, there is a corresponding change in the amplitude and polarity of the output voltage e_o. Applied to a reactance tube, this output voltage controls the frequency of the horizontal oscillator and thus maintains the proper synchronism between the sync pulses and the oscillator output.

Figure 10A is the diagram of a practical sine wave sweep frequency control system in which V_1 and V_2 are the sync discriminator tubes, V_3 a reactance tube and V_4 an electron coupled oscillator. As described in an earlier lesson, the V_4 cathode, control grid, and screen grid function as a Hartley oscillator. The plate current pulses develop a square wave voltage across R_{11}. Differentiated by C_{10} and R_{12}, this voltage is applied to the control grid of the discharge tube.

The oscillator frequency may be varied over a narrow range by adjusting R_{13} to change the grid leak bias voltage developed across series connected R_9 and R_{13}. Therefore R_{13} is operated manually as the HORIZONTAL HOLD CONTROL.

Although the oscillator output at the V_4 plate has square waveform, the flywheel action in the grid tank circuit causes a sine wave oscillatory current in L_2. Receiving its sine wave from center-tapped winding L_1 which is inductively coupled to oscillator coil L_2, and its sync pulses through capacitor C_7 into the L_1 center tap, the sync discriminator of Figure 10A operates in about the same manner as the basic circuit of Figure 8A.

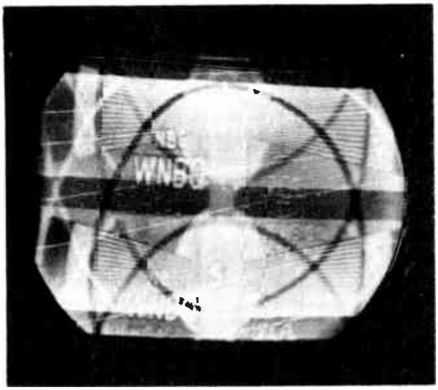

These multiple images overlapping each other indicate that the vertical sync is inoperative in this TV receiver.

Reactance tube V_3 requires a grid bias of approximately —3 volts for proper operation. However, to provide the desired cathode-plate voltage phase relationships, R_5 is only about 10 ohms. Thus, V_3 plate current in R_5 develops a very small voltage drop, and to obtain the needed bias, the lower end of R_2 and the V_2 cathode are connected to a —3 volt source as indicated. This places a bias on the V_3 grid, because the grid d-c return circuit is through R_4, R_1, R_2, and the —3 volt source to ground.

Connected from the grid to ground, C_3 charges through R_2, R_1, and R_4 until its upper plate is 3 volts negative with respect to ground, and will maintain this charge so long as the discriminator output is zero. When the sine wave input shifts in phase with respect to the sync pulses, the discriminator output adds to or subtracts from the —3 volts and C_3 charges or discharges to the new value.

Although the sync discriminator readily responds to any noise pulses reaching it, the rapid output variations are not passed by filter C_2R_4 and, therefore, these noise "spikes" have little effect on the C_3 charge. Applied to the control grid, the voltage across C_3 provides a variable d-c bias for controlling V_3.

The Reactance Tube Circuit

Functioning as a variable inductance connected in parallel with L_2, the reactance tube V_3 varies the oscillator frequency as its bias is changed. In Figure 10A, the V_3 plate receives an a-c voltage from oscillator coil L_2 through capacitor C_4, while the normal d-c voltage is applied through R_8. Also connected across L_2, C_5 and R_5 form a phase shifting circuit that supplies an a-c voltage to the V_3 cathode. C_5 is chosen so its capacitive reactance is much greater than the resistance of R_5, causing a current through R_5 that leads the applied voltage by nearly 90°.

In phase with the current, the voltage drop E_{R5} also leads the L_2

voltage by nearly 90° as shown by the curves of Figure 10B. The V_3 plate current indicated as I_{V_3} is 180° out of phase with the cathode voltage, E_{R_5}, and lags the applied voltage, E_{L_2} by 90°.

In a perfect inductor the current lags the voltage by 90° therefore, insofar as the oscillator inductor L_2 is concerned, the reactance tube plate current has the same effect as a parallel connected inductor. A decrease of plate current corresponds to an increase of inductance while an increase of plate current corresponds to a decrease of inductance.

To illustrate the operation of the complete circuit, assume that with the connections shown in Figure 10A, an increase in oscillator frequency causes V_2 to conduct more than V_1. Under these conditions, voltage E_{R_2} is greater than E_{R_1} and the negative voltage applied to C_3 and the V_3 grid is increased. The resulting decrease in the reactance tube plate current is equivalent to increasing the inductance represented by the tube, thus increasing the total inductance in the oscillator tuned circuit. By this action, the oscillator frequency decreases until the phase relations in the sync discriminator return to the normal condition as shown in Figure 9C and no further correction voltage is applied to the reactance tube grid circuit.

On the other hand, should the oscillator frequency decrease below the correct value, the sine wave-sync pulse phase relations is such that V_1 conducts more than V_2, the voltage drop E_{R_1} is greater than E_{R_2} and the sync discriminator produces a positive d-c output. The resulting decrease in the net negative bias on the V_3 grid increases its plate current. This is equivalent to a decrease in the inductance represented by V_3, thus causing the oscillator frequency to increase. Again, when the correct frequency is reached, the discriminator output reduces to zero.

In practice, the response of the sine wave type control circuit is immediate and quite effective and, although numerous variations are employed, their basic principles of operation remain the same.

SAWTOOTH AFC SYSTEM

Figure 11A shows the basic circuit of a HORIZONTAL SAWTOOTH TYPE AFC SYSTEM in which the frequency and phase of the sync pulses are compared with those of a sawtooth voltage that is obtained from the horizontal output amplifier. The sync discriminator produces a d-c voltage the magnitude of which is increased by the d-c amplifier and applied to the multivibrator to control the frequency.

Multivibrator Frequency Control

In all multivibrators, the oscillation frequency is determined primarily by the resistance and capacitance of the circuit, but small frequency changes may be obtained by varying the bias on one of the tubes. As the multivibrator frequency changes, the phase relations of the sync discriminator input wave change and the discriminator d-c output varies the multivibrator grid bias to return it to the proper frequency. However, the direction of frequency change depends upon the polarity of the control voltage and the multivibrator grid circuit to which it is applied.

In the partial multivibrator of Figure 11A the control voltage is applied to the grid of the discharge tube V_5. The cutoff time of V_5 is determined by the C_8R_9 network in the grid circuit. A positive voltage applied to the V_5 grid opposes the negative voltage across R_9 causing the tube to conduct sooner while an applied negative voltage aids the bias across R_9 so that V_5 remains cut off longer. Thus, WITH THE D-C CONTROL VOLTAGE APPLIED TO THE DISCHARGE TUBE A POSITIVE CONTROL VOLTAGE INCREASES THE FREQUENCY, WHILE A NEGATIVE VOLTAGE DECREASES THE FREQUENCY.

When the control voltage is applied to the grid of tube V_6, as shown in Figure 12, the effect is reversed. The cutoff period of V_5 is determined by the time required for C_8 to discharge through R_9 due to a change in V_6 plate voltage. With a relatively high plate voltage on V_6 the C_8 discharge is less, a small voltage drop across R_9 aids the cutoff bias, and permits V_5 to conduct sooner. Conversely, a decrease in V_6 plate voltage causes V_5 to remain cutoff longer due to longer time required for C_8 to discharge. Hence, WITH THE D-C CONTROL VOLTAGE APPLIED TO THE CONTROL TUBE A POSITIVE VOLTAGE DECREASES THE FREQUENCY OF THE MULTIVIBRATOR AND A NEGATIVE VOLTAGE INCREASES THE FREQUENCY.

The Diode Sync Discriminator

As shown in Figure 11A, the sync pulses are amplified by V_1 and coupled into the sync discriminator by transformer T_1. Positive pulses are applied through C_2 to the V_2 plate and negative pulses through C_3 to the V_3 cathode, thus the diodes conduct in series, charging C_2 and C_3 to the polarities shown.

During this charging interval, electrons flow from the C_2 positive plate, through the T_1 secondary to the C_3 negative plate. From the C_3 positive plate, electrons flow through V_3 and V_2 to the negative plate of C_2, thereby charging the capacitors to the peak value of the applied pulses. Throughout the intervals between sync pulses, C_2 and C_3 discharge slightly through the T_1 secondary and the high resistances of R_2 and R_3. The charge voltages E_{C2} and E_{C3} serve to bias the V_2 plate negative and the V_3 cathode positive.

To understand how these biases are applied to the diodes, note that, in series with each other, V_2 and V_3 are connected in parallel with R_2 and R_3. Resistor R_2 is equal to R_3, and V_2 offers the same resistance to current as V_3. During sync pulses, when the diodes are conducting equally, the voltage drop across V_2 is equal to that across V_3, so that the junction between the V_2 cathode and V_3 plate has the same potential (zero with respect to ground) as the grounded junction between R_2 and R_3.

However, in the intervals between sync pulses, the diodes are nonconductive because the charges on C_2 and C_3 have greater magnitude than the applied sawtooth voltage with which they are in series. That is, in the series circuit consisting of the T_1 secondary, C_3, V_3, V_2, and C_2, the voltages E_{C_2} and E_{C_3} have polarity which opposes conduction of the diodes, and only the sync pulses have sufficient amplitude to overcome these d-c voltages and cause V_2 and V_3 to conduct. Thus, the diodes conduct only at the sync pulse peak and are cut off at all other times. Operating in this manner, diodes V_2 and V_3 serve as an electronic switch through which the sawtooth voltage present at the T_1 center tap can be applied to C_4 during the sync pulse interval.

Although not shown in Figure 11A, the horizontal multivibrator output is amplified by an output tube that is transformer coupled to the deflection coils. A voltage pulse, obtained from the transformer secondary, is fed back through an RC integrating circuit and the resulting sawtooth is applied to the T_1 centertap as shown.

The picture becomes a meaningless blur when the TV receiver lacks horizontal sync.

Not having sufficient amplitude to overcome the bias provided by the charged capacitors C_2 and C_3, the sawtooth voltage is unable to cause diode conduction between sync pulses. However, during the synchronizing intervals the diodes are driven into conduction by the sync pulses, allowing small portions of the sawtooth voltage to be impressed across the discriminator output. As a result of this action, C_4 charges or discharges to a voltage determined by the polarity and magnitude of the sawtooth voltage during the interval of diode conduction.

To illustrate this sync discriminator action more completely, the wave-forms indicated in the circuit of Figure 11A have been aligned in Figures 11B, 11D, and 11C to show their phase relationships. In Figure 11B, the sync pulses are applied to the V_2 plate and the V_3 cathode when the sawtooth voltage is crossing its zero axis in the center of its "flyback" period. Although the sync pulses cause the diodes to conduct, the sawtooth voltage is zero at these instants, therefore the charge on capacitor C_4 remains at zero.

A slight increase in multivibrator frequency results in the phase relation of Figure 11C, where the sync pulses occur slightly past the center of the sawtooth flyback interval. Here, the voltage applied to the T_1 center tap has attained a small positive value. Therefore, when the pulses cause conduction of the diodes, this positive voltage is applied to C_4, causing the upper plate of this capacitor to become positive with respect to the grounded plate.

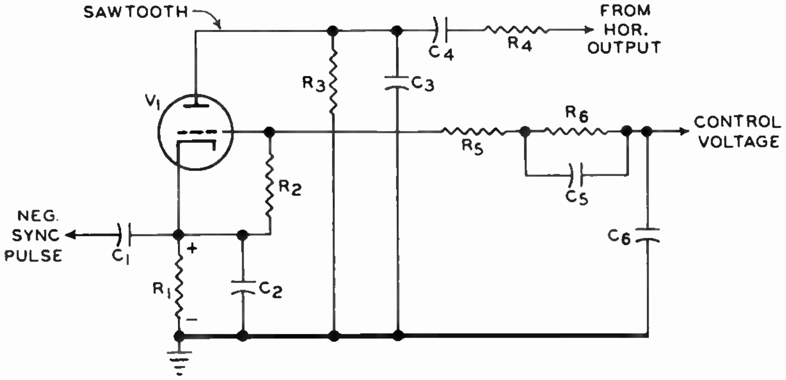

This triode phase detector develops a positive voltage across R_1 which is the reference for the multivibrator adjustment. The grid is connected through R_2 to the cathode and no bias is used. The control voltage varies with a change of phase in the sync and sawtooth voltages due to the increase or decrease in the conduction of the tube.

Thus, the sawtooth voltage adds to the positive pulse applied to the plate of V_2 and subtracts from the negative pulse applied to the cathode of V_3, thus causing V_2 to conduct more than V_3. The additional current for V_2 is supplied by the charging current of C_4.

Electrons flow from the upper ungrounded C_4 plate through V_2 to the C_2 negative plate. Other electrons leave the C_2 positive plate and pass through the upper half of the T_1 winding to the center tap. From the center tap, electrons flow to ground through the circuit from which the sawtooth is obtained, then to the lower, grounded C_4 plate. Charging through the path just mentioned, C_4 gradually assumes a potential difference equal to the voltage applied to the T_1 center tap.

On the other hand, should the multivibrator frequency decrease slightly, as shown in Figure 11D, the flyback portions of the sawtooth do not quite reach zero before the sync pulses arrive. The voltage applied to the T_1 center tap is slightly negative and, following the previous reasoning, the sawtooth applied to the V_2 plate and V_3 cathode also is slightly negative, causing V_3 to conduct more than V_2.

Electrons flow from the T_1 center tap through the lower half of the T_1 winding to the C_3 negative plate. Other electrons leave the C_3 positive plate and pass through V_3 to the upper, ungrounded C_4 plate. Leaving the lower C_4 plate, electrons flow to ground, then through the circuit from which the sawtooth is obtained to the T_1 center tap. Charging through this circuit, C_4 acquires a negative charge equal to the voltage applied to the T_1 center tap

Thus, as in the sine wave type afc, the sync discriminator develops a d-c output, the polarity and magnitude of which is dependent upon the phase relations of the sync pulses and horizontal output sawtooth.

The D-C Amplifier

In the circuit of Figure 11A, a d-c amplifier, V_4, is connected between the sync discriminator and the horizontal multivibrator, V_5. During the sync pulse intervals when the discriminator diodes are conductive, there is a d-c path from the V_4 grid through V_2 and R_2 to ground, and from ground through R_3 and V_3 to the grid.

However, during the intervals between pulses, the diodes are not conductive, and the d-c voltage between the V_4 grid and ground consists of the charge on C_4. Thus, this capacitor may be thought of as a bias source, the output of which may be positive, negative, or zero, depending upon the relative phase relationship between the sawtooth wave and sync pulses.

Biased by the drop across R_5 and the varying charge of C_4, the V_4 grid voltage determines the V_4 plate current and, in turn, the plate voltage. Applied through the horizontal hold control R_7, the V_4 plate voltage adds algebraically with the drop across R_9 to determine the net bias on the multivibrator grid.

With the horizontal hold control adjusted properly, the sync pulse-sawtooth phase relations are as shown in Figure 11B, the C_4 charge is zero, and the V_4 bias is determined solely by the drop across R_5. The resulting positive V_4 plate voltage adds to the negative voltage across R_9 and provides the correct V_5 grid bias.

A slight increase in multivibrator frequency produces the phase relations shown in Figure 11C and, as explained previously, C_4 assumes a small positive charge that reduces the net bias on V_4. The resulting decrease of V_4 plate voltage is added to the negative voltage across R_9 to increase the net negative V_5 grid bias, thereby lowering the oscillation frequency until the phase relations are correct and no further control voltage is developed.

On the other hand, a decrease in multivibrator frequency causes the phase relations shown in Figure 11D and C_4 acquires a small negative charge that increases the V_4 grid bias. This bias increase reduces the plate current and causes a rise of plate voltage which decreases the multivibrator bias. The resulting increase in frequency brings the phase relations back to normal.

The sync discriminator is responsive to noise voltages, but any such voltages in its output are removed by filter C_4, R_4, and C_5 so that they are not applied to the d-c amplifier. In series with the multivibrator cathode bias resistor, R_8, resonant circuit L_1C_7 is tuned to the oscillator frequency to improve the basic frequency stability of the system.

The Triode Phase Detector

The circuit diagram of a TRIODE PHASE DETECTOR is shown in Figure 12. In this afc system the frequency and phase of the sync pulses are compared with the sawtooth voltage obtained from the output of the horizontal amplifier. The output of the phase detector provides the necessary control of the horizontal oscillator.

The principle of operation is based on the manner in which the tube operates with grid current. The flow depends directly on the potential applied to the plate of the tube. With the plate voltage dropped to zero, a maximum electron flow occurs in the grid circuit. Conversely, with an increase of plate voltage, there is a corresponding decrease in grid current.

As shown in Figure 12, negative sync pulses are applied to the V_1 cathode. C_4 has a bypassing effect on the sync pulses and, therefore, effectively grounds the grid. The pulses make the cathode negative with respect to grid. Since this is equivalent to making the grid positive, grid current flows and charges C_4 to the polarity shown.

Between pulses, C_4 slowly discharges through R_4 and R_5, keeping the grid negative with respect to ground. At the same time the sawtooth voltage applied to the plate causes cathode to plate conduction and develops a voltage across R_5 which is positive with respect to ground. This cathode bias opposes the C_4 discharge voltage drop across R_5. As a result, the voltage on the V_1 grid which is applied as a correction voltage to the multivibrator, is determined by both wave-forms. The R_6C_5 network is placed in the oscillator grid circuit to remove noise or other signals which otherwise would cause erratic operation of the oscillator.

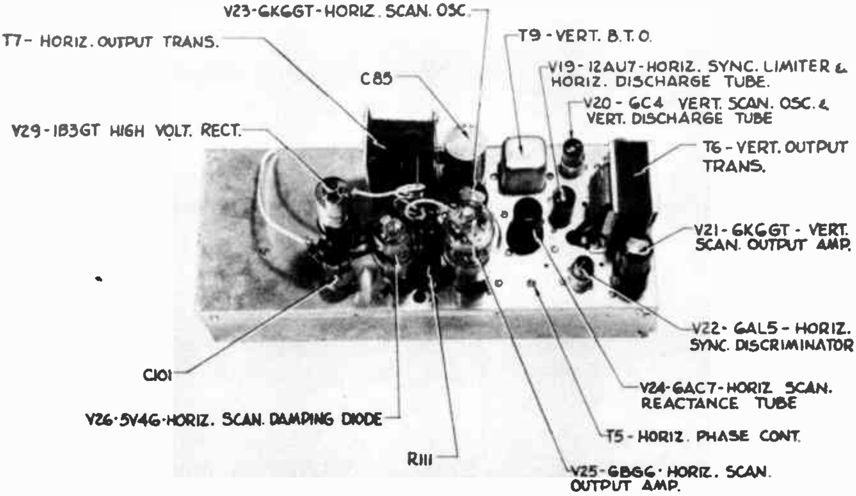

A top chassis view of vertical and horizontal deflection circuits. The circuits necessary for oscillator frequency control are also included in this unit.

Courtesy Scott Radio Lab.

The relationship between the sync pulses at the cathode and the sawtooth at the plate determine the polarity and magnitude of the correction voltage. A slight increase in the multivibrator frequency produces the phase relations shown in Figure 13B. The sync pulses occur at the cathode when the sawtooth is increasing in a positive direction. This causes an increase in plate current and a decrease in grid current. The plate current through R_5 develops a voltage positive with respect to ground, which overcomes the negative voltage across C_4. Thus a positive correction voltage is applied to the multivibrator grid which decreases the frequency.

With a decrease in frequency, the phase relations of the sync pulses and sawtooth voltage are as shown in Figure 13C. The sync pulses occur at the cathode when the sawtooth voltage at the plate is negative permitting a greater current flow in the grid circuit. This develops a higher negative voltage across C_4 which is applied to the multivibrator grid to increase the frequency.

Although the response of the sawtooth type control systems are usually not as rapid as that of the sine wave type, it is sufficiently effective for many applications.

PULSE-TIME AFC SYSTEM

Another type of afc is the PULSE-TIME CIRCUIT shown in Figure 14. The three input wave-forms at the left are combined into a resultant pulse, the width of which is determined by the sync pulse-sweep voltage phase relationship. The resultant pulse is applied to the V_1 control grid, and its width determines the average plate current of this tube. Proportional to the current, a d-c voltage is developed across R_7 and impressed on the V_2 grid circuit, thereby controlling the blocking oscillator frequency.

Replacing the usual two-winding transformer, autotransformer T_1 provides the necessary feedback and, in addition, has an adjustable iron core to permit control of the oscillation frequency. Performing the dual function of blocking oscillator and discharge tube, V_2 controls the charging and discharging of capacitor C_{11}, thus producing the desired sawtooth voltage.

From the V_2 grid, there is a d-c path through R_9 and R_7 to ground, therefore the total bias on V_2 is equal to the algebraic sum of the drop across R_9 due to the C_9 discharge current and the drop across R_7 due to the discharge current of cathode circuit capacitor C_6. During the time that the V_2 grid is negative, C_9 discharges through R_9 and R_6, and also through R_4 and R_5 into the upper plate of C_6. However, C_6 is very large compared to C_9, and therefore, it is discharged only slightly by this current.

The V_1 plate is operated at a fairly low positive potential, thus permitting a small negative grid bias to cut off its plate current. Therefore, with its control grid connected to the junction between R_4 and R_5 and biased by a portion of the blocking oscillator grid leak bias developed across these resistors, V_1 is maintained at cutoff except during the sync pulse intervals.

Obtained from the junction between R_{10} and C_{10}, the sawtooth voltage, $E_{C_{11}}$ is fed back to point number (1) in the V_1 grid circuit. In order to increase the effectiveness of this voltage, it is integrated by resistor R_1 and capacitor C_3 into a wave-form having the shape of a parabola, as shown by the number (1) curves of Figure 15. Obtained from the horizontal deflection output transformer, sharp negative pulses are impressed at input number (2), as indicated in Figure 14, and partially integrated by R_2, C_1, and C_3 into the wave-form shown by the number (2) curves of Figure 15.

Voltage waves (1) and (2) originate from the same source, and therefore, their phase with respect to each other never changes at the control tube input, though their shapes are quite different. The third voltage applied to the circuit is the horizontal sync pulse. As indicated, it is applied with positive polarity at point number (3) in Figure 14. Capacitors C_2 and C_3 only attenuate the pulse.

When the blocking oscillator frequency changes with respect to that of the sync pulses, the phase of voltages (1) and (2) of Figure 15 are shifted with respect to that of the sync pulses. As indicated in Figure 15A, when the oscillator frequency decreases, the most positive points of waves (1) and (2) lag the sync pulse, wave (3), and at point P of Figure 14, the resultant of these three voltages will have the wave-form of curve (4).

As shown in Figure 15B, when the oscillator is operating at the correct frequency, the most positive points of all three applied voltages occur at the same instant, producing the resultant voltage wave-form of curve (4). Finally, as shown in Figure 15C, if the oscillator frequency increases, the positive peaks of waves (1) and (2) lead that of the sync pulse, and the wave-form of curve (4) is produced.

The entire action of this control circuit is based upon the fact that oscillator frequency variations change the phase relationships between the applied voltages, and produce resultant voltage wave-forms, the positive alternations of which vary in width, as shown by curves (4) of Figures 15A, 15B, and 15C.

In Figure 15, the horizontal dashed line represents the grid voltage level below which the V_1 plate current is cut off. As mentioned, V_1 is biased beyond cutoff by the negative voltage across resistor R_5. Therefore, this tube is conductive only during the short intervals when the resultant waves (curves 4 of Figure 15) are able to overcome this negative bias and drive the grid positive with respect to the cutoff level.

With the same wave-forms as the portions of the grid voltage above the dashed line in the Figure, the V_1 plate current pulses will be of relatively long duration when the oscillator frequency is low, Figure 15A; of medium duration for the correct oscillator frequency, Figure 15B; and of short duration when the oscillator frequency is high, Figure 15C.

Referring again to Figure 14, during the conductive intervals of

V_1, the pulses of plate current in R_7 and R_6 produce voltage drops which makes the cathode positive with respect to ground. To obtain a d-c voltage proportional to the average of these pulses, the large capacitor C_6, connected from cathode to ground, becomes charged to the polarity indicated.

During the intervals between pulses, C_6 discharges through R_7 and R_6, to maintain the upper ends of these resistors positive with respect to ground. Because the time constant $C_6R_6R_7$ is relatively long, practically constant voltage drops are produced across R_6 and R_7.

As the V_2 grid resistor, R_9, is connected to the junction between R_6 and R_7, the positive d-c voltage E_{R7} is in series with the negative grid leak bias E_{R9}. Since E_{R9} is much greater than the positive bias E_{R7}, the normal operation of the blocking oscillator is maintained. However, the total bias on the grid of V_2 is equal to E_{R9} less E_{R7}, therefore, E_{R7} determines how negative the grid of the tube is driven during each cycle.

That is, with the oscillator grid return connected to a positive bias point rather than directly to the cathode, the grid is not driven as far negative and it requires less time for the tube to become conductive again after the plate current has been cut off. Thus the decrease of total negative grid bias increases the frequency of oscillation.

The charge on C_6, and therefore the bias E_{R7}, is directly proportional to the duration of the V_1 plate current pulses. These, in turn, are determined by the width of the input pulses illustrated by curves (4) of Figure 15. Therefore, when the oscillator frequency is correct, the input pulse of curve (4), Figure 15B, is applied to the V_1 grid, and plate current pulses charge C_6 to a voltage corresponding to this optimum pulse width. Under these conditions, the algebraic total of E_{R9} and E_{R7} maintains the oscillator at the desired 15,750 cps.

As explained above, should the oscillator frequency decrease, the wider pulse of curve (4), Figure 15A, causes the V_1 plate current pulses to have longer duration, thereby increasing the charge on C_6. This action decreases the net negative bias on V_2, thus increasing the oscillator frequency until 15,750 cps is attained. On the other hand, should the oscillator frequency increase above 15,750 cps, the resulting narrow pulses of curve (4), Figure 15C, produce shorter duration plate current pulses of V_1 and result in a decrease in the charge on C_6. Hence, the net V_2 grid bias becomes more negative and decreases the oscillator frequency.

At the beginning of this lesson it was pointed out that the purpose of an afc circuit is to maintain correct sweep oscillator frequency by averaging many regularly recurring sync pulses, but to prevent noise or picture signal components from affecting the oscillator. These averaging and undesirable-voltage-elimination functions are provided in the circuit of Figure 14 by the large cathode capacitor, C_6.

However, to obtain better synchronization of the oscillator, a small component of the sync pulse is superimposed on the d-c control voltage and applied to the oscillator tube grid. A design difficulty here is that, when a large capacitor C_6 is employed alone, it will remove this desired sync-pulse component as well as the various undesired signal and noise components.

To provide the proper action, the V_1 cathode circuit consists of two parts, one with a long time constant and the other with a short time constant. This arrangement is obtained by making C_6 just large enough to provide the desired pulse averaging action, but small enough so that it does not filter the sync pulses completely. To filter the undesired components, a larger capacitor, C_5, in series with the low value resistor R_3, is connected across C_6.

For the relatively low frequency signal and noise components, R_3 has little effect, and C_5, R_6, and R_7 provide a relatively long time constant. However, at the frequency of the sync pulses, C_5 is practically a short circuit, and R_3 is electrically in parallel with C_6 to provide the needed short time constant for response to the pulses. Thus, at the instant of the sync pulse arrival, a small positive pulse is produced across R_6 and R_7, and the portion across R_7 is applied through R_9 to the oscillator grid.

Governing the plate current, the V_1 plate voltage may be varied to alter the blocking oscillator grid bias, and thus potentiometer R_8 serves as a hold control. Capacitor C_3 is variable to permit increasing the pulse voltage input to the V_1 grid when the noise level is high or the received video signal is weak. Capacitor C_7 serves to stabilize the positive bias voltage E_{R7}, but has relatively small capacitance so it will not remove the desired sync pulse component.

The oscillator plate current pulses tend to shock-excite the resonant circuit and causes a series of damped oscillations at the frequency to which the coil T_1 is tuned by its distributed capacitance. Such oscillation cause the scanning spot to trace a corresponding pattern on the cathode ray tube screen. Therefore resistor R_{10} is connected across one section of T_1 to damp out these oscillations.

GRUEN AFC

The schematic diagram of an afc system known as the GRUEN CIRCUIT is shown in Figure 16. The sweep oscillator is a series-fed Hartley controlled by a variable resistance tube. This system is very stable in the presence of noise.

A portion of the sweep output is fed back to the phase detector where it is compared to the sync pulses. The output of the phase detector is a d-c voltage fed to the reactance tube to control the bias. A change in the reactance tube bias, caused by a change in the frequency, returns the oscillator to the correct frequency.

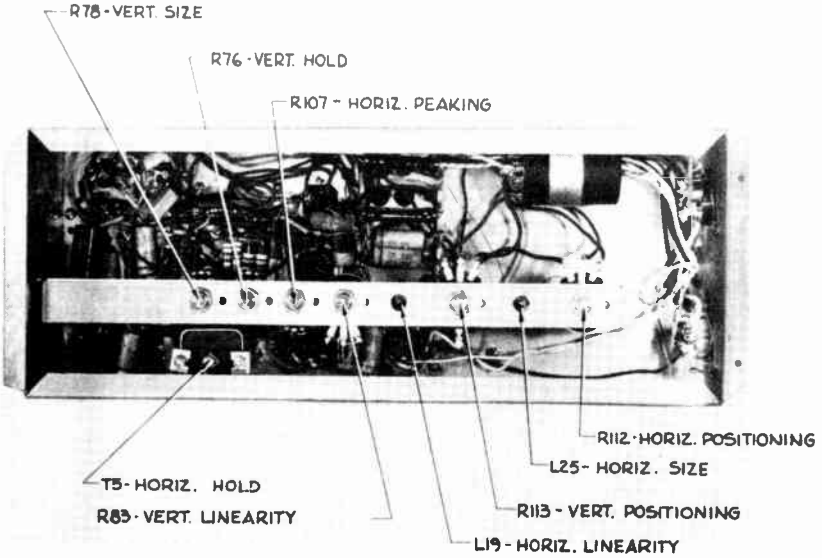

The under chassis view of the unit shown in the preceding illustration.

Courtesy Scott Radio Lab.

Referring to tube V_1 of Figure 16, diodes D_1 and D_2 are connected in a balanced discriminator circuit. Resistors R_1 and R_3 of equal value are connected across D_2 and D_1 respectively. The cathodes of D_1 and D_2 are connected together while D_2 plate is connected to ground.

When negative sync pulses are applied to the cathode, both diodes conduct charging capacitor C_1 to the indicated polarity.

Tracing the electron paths, from D_1 cathode to plate to the lower plate of C_{13}, from C_{13} upper plate to ground, through the sync pulse source to the C_1 negative plate, and from the lower C_1 plate to cathode. For D_2, electrons flow from cathode to plate, to ground, through the sync source to C_1 negative plate, and from the lower C_1 plate to cathode.

During the interval between sync pulses, C_1 discharge equally through R_1 and R_3 developing voltages which are equal and opposite with respect to ground. With equal and opposite voltages developed across resistors R_1 and R_3, the output is determined by the C_{13} charge. In order to develop a correction voltage, negative pulses are fed back from the sweep output through a low pass network. The sawtooth voltage developed by this $R_9R_8C_{13}$ network is applied to the discriminator and compared with the sync pulses.

The phase of the sync pulses and sawtooth for three operating conditions are shown in Figures 17A, 17B, and 17C. In Figure 17A, the applied signals are in phase and the detector output is the C_{13} charge voltage. A condition where the oscillator is too fast is shown in Figure 17B. At the moment that the sync pulse occurs, the sawtooth voltage is going negative, placing a negative voltage on the plate D_1 and a positive voltage on the D_2 plate. This results in more conduction of D_2 and less conduction of D_1 and C_{13} charges to a lower voltage. Hence, the control voltage is less negative, and, applied to the reactance tube V_2, this positive voltage decreases the frequency of the oscillator.

In Figure 17C, the phase of the sync pulse and sawtooth voltages are shown when the oscillator is low in frequency. The sawtooth voltage is positive at the D_1 plate and negative at D_2 plate. This results in greater conduction of D_1 and a decrease in conduction of D_2. The net d-c output is more negative due to the larger voltage on C_{13}. A more negative control voltage applied to the reactance tube V_2 increases the frequency.

The REACTANCE TUBE V_2 serves as a variable resistance in series with C_6 and R_7 across the oscillator tank circuit. The plate of V_2 connects to B+ through R_6 which limits the current through the tube, and resistor R_5, bypassed by C_5, carries the combined plate current of the horizontal oscillator and V_2. The voltage drop across it sets the operating point for V_2.

With a positive voltage applied to the grid of V_2, the plate current increases and the plate to cathode resistance is decreased. In series with C_6 across the tank inductance, the reduced resistance allows C_6 to have greater shunting effect on the tank inductance, thus resulting in a lower frequency.

With a decrease in V_2 plate current, due to a negative voltage at the grid, the plate resistance will be high. This higher resistance reduces the shunting effect of C_6 on the tank circuit, thus resulting in an increase of frequency.

Summarizing these Gruen circuit actions: *an increase in the oscillator frequency causes the phase detector to apply a positive control voltage to the* V_2 *grid, this positive voltage decreases the plate resistance, thereby increasing the shunting effect of* C_6*. As a result the oscillator frequency decreases. On the other hand, the phase detector output is negative when the oscillator frequency decreases. The negative voltage applied to the* V_2 *grid increases the plate resistance which decreases the shunting effect of* C_6*, and therefore increases the oscillator frequency.*

The oscillator remains cut off except for the positive peak of the sine wave, and so only a positive pulse is developed across R_7. Coupled by C_{10} to the V_4 grid, this pulse causes a flow of grid current which charges C_{10} negative at the grid end. Between pulses C_{10} discharges slowly through R_{11} holding V_4 plate current at cutoff.

The capacitor C_{12} charges through R_{12} and R_{13} during the interval V_4 is cut off, but the next positive pulse causes V_4 to conduct and C_{12} discharges through the low resistance of the tube. Thus, tube V_4 conducts during the pulse and is cut off between pulses to produce the necessary deflection wave-form.

IMPORTANT DEFINITIONS

AUTOMATIC FREQUENCY-PHASE CONTROL—A circuit designed to maintain automatically the correct sweep or deflection frequency by comparing the phase of the sync pulses with the oscillator frequency.

AUTOMATIC SYNC CONTROL—See Automatic Frequency-Phase Control.

HORIZONTAL AFC—See Automatic Frequency-Phase Control.

SERRATION—[si RAY sh'n]—In television the narrow slots in the vertical sync pulse for maintaining horizontal sync.

SYNCHRONIZED—[SIN kroh nighzd]—Occurring in step, one with the other.

SYNC PULSE CLIPPER—An electron circuit designed for removing the sync pulses from a complex wave.

SYNC PULSE SEPARATOR—An RC filter for segregating sync pulses according to their time durations.

STUDENT NOTES

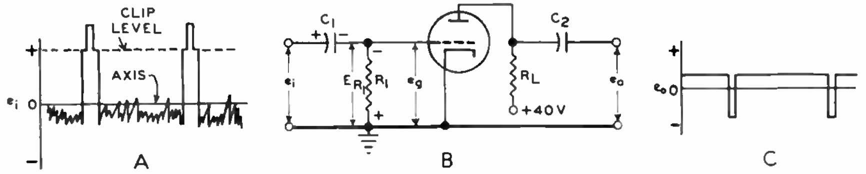

FIGURE 1

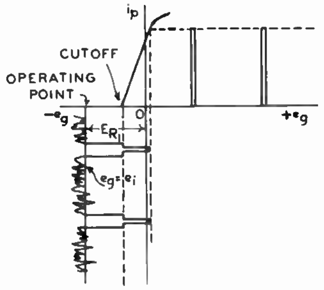

FIGURE 2

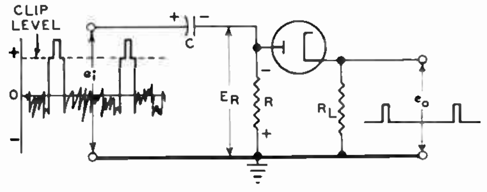

FIGURE 3

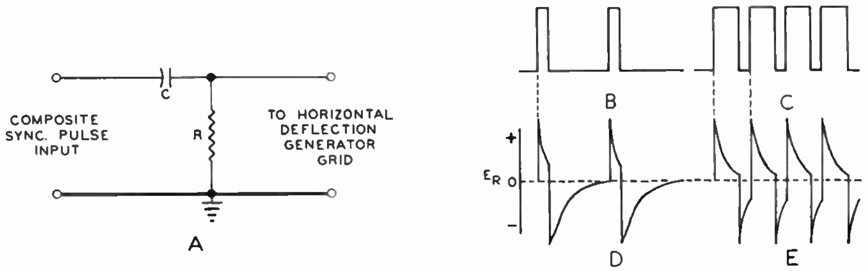

FIGURE 4

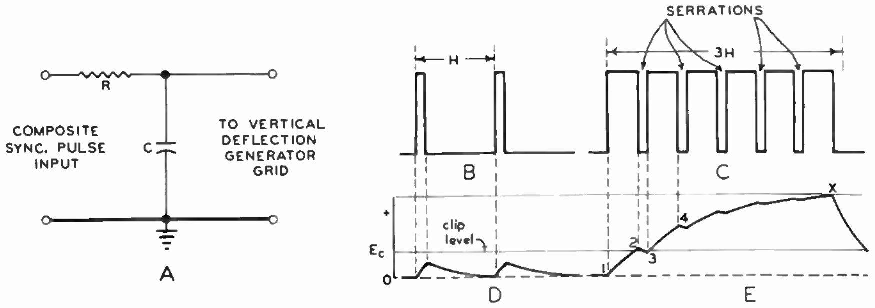

FIGURE 5

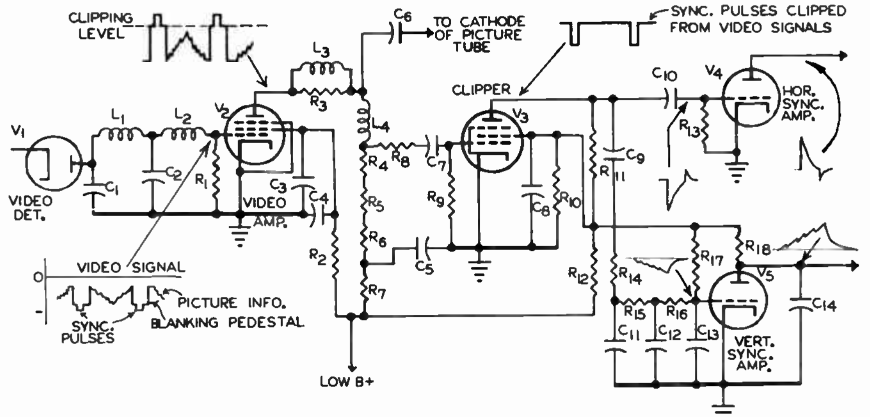

FIGURE 6

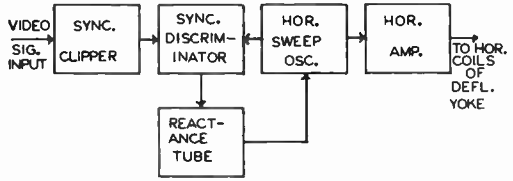

FIGURE 7

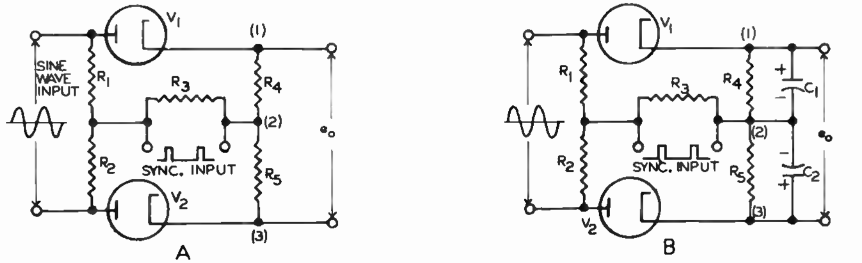

FIGURE 8

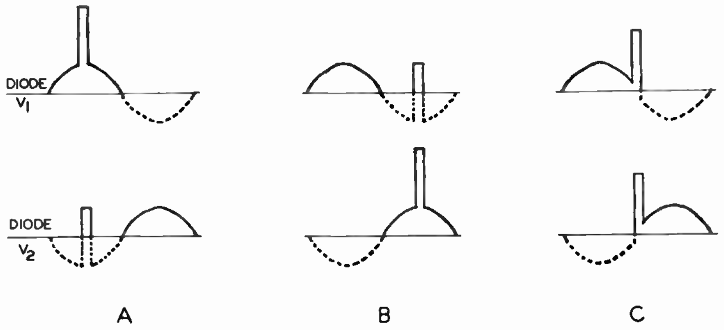

FIGURE 9

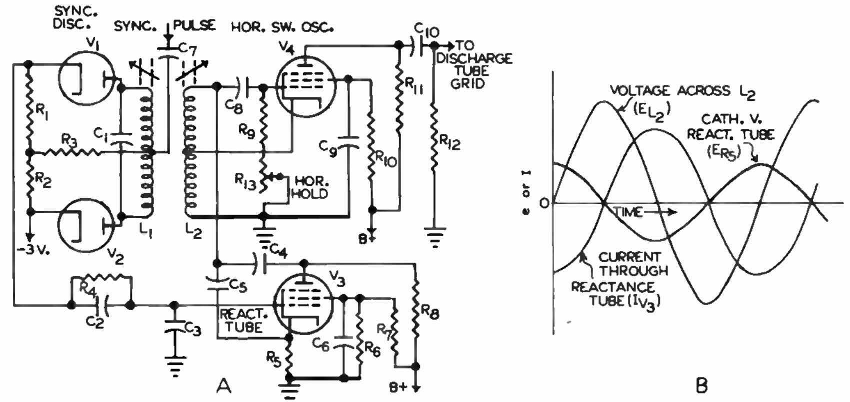

FIGURE 10

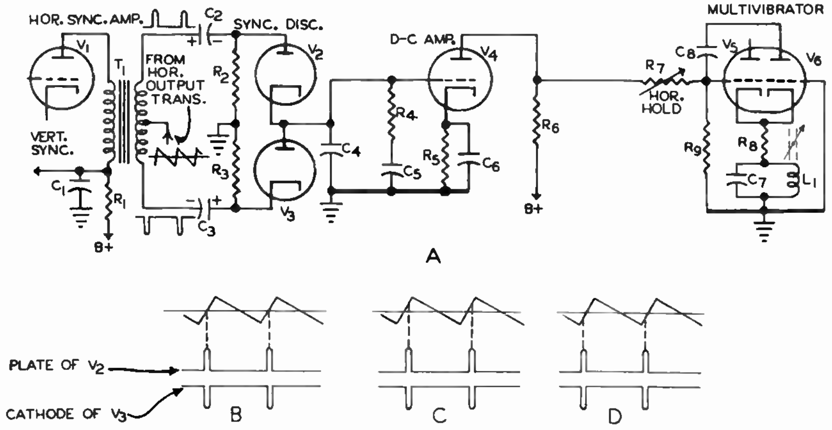

FIGURE 11

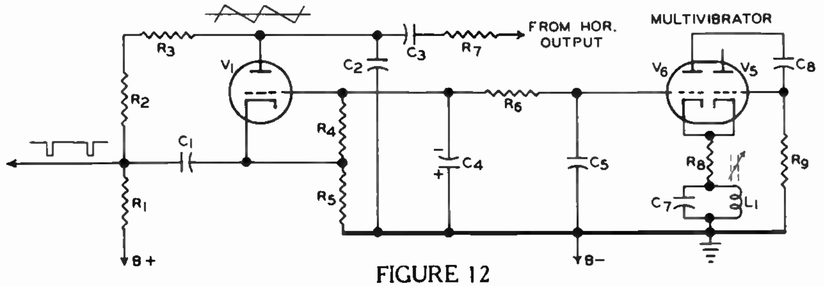

FIGURE 12

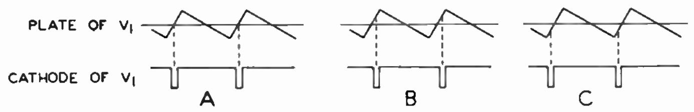

FIGURE 13

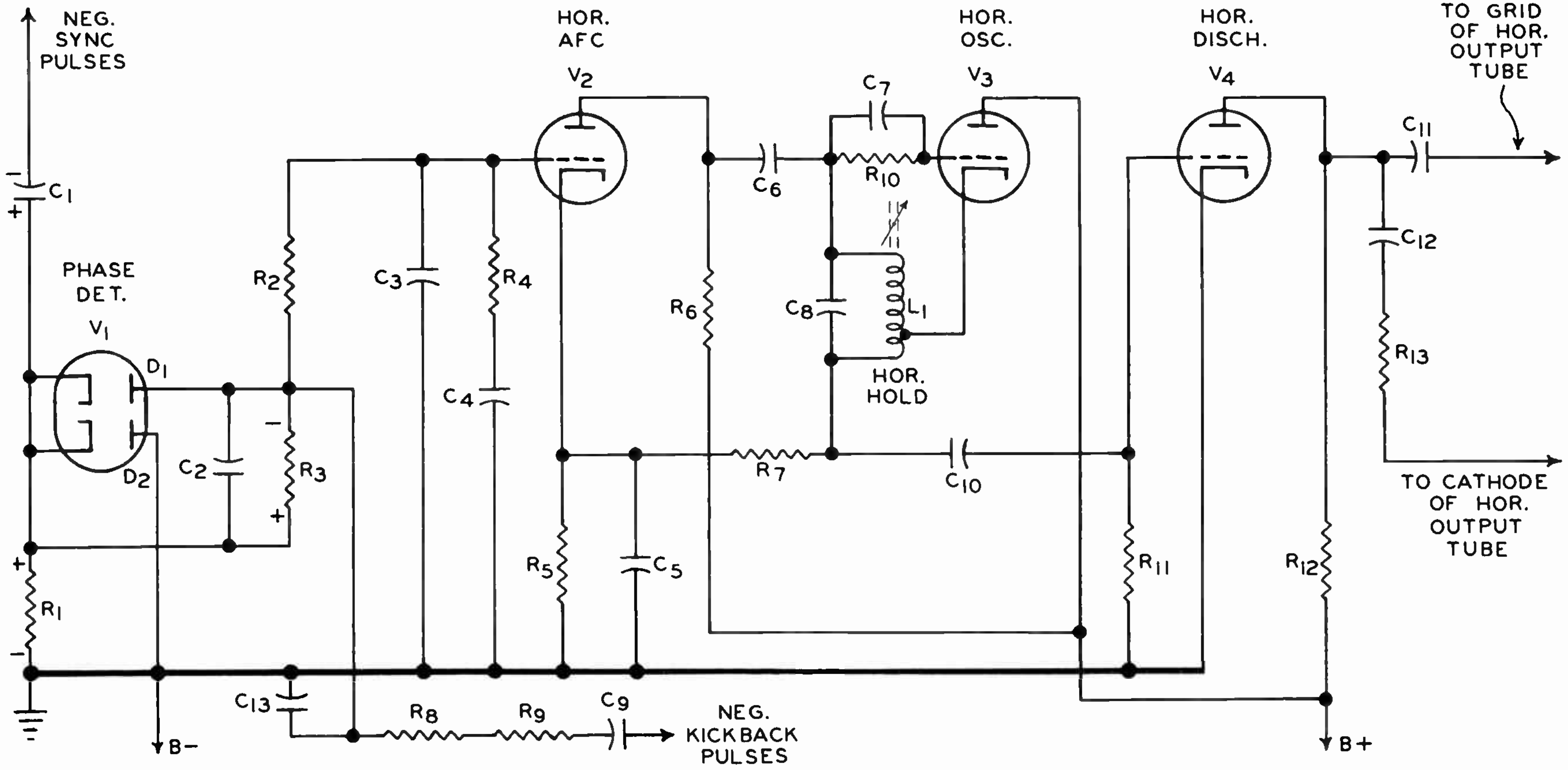

FIGURE 16

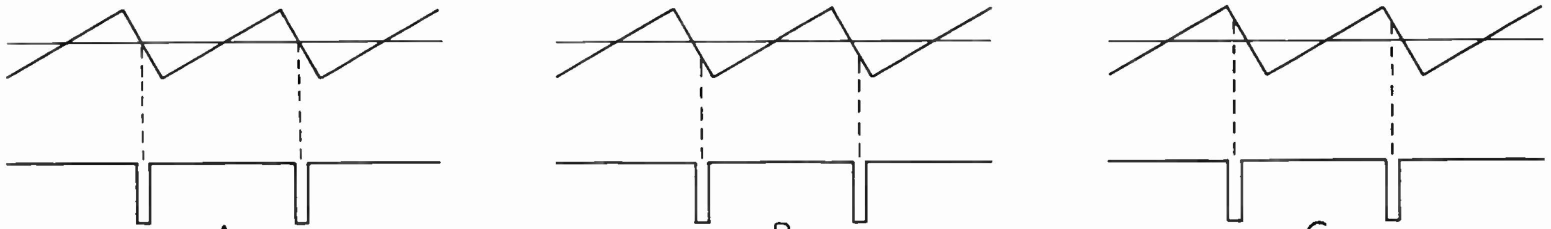
A

B

C

FIGURE 17

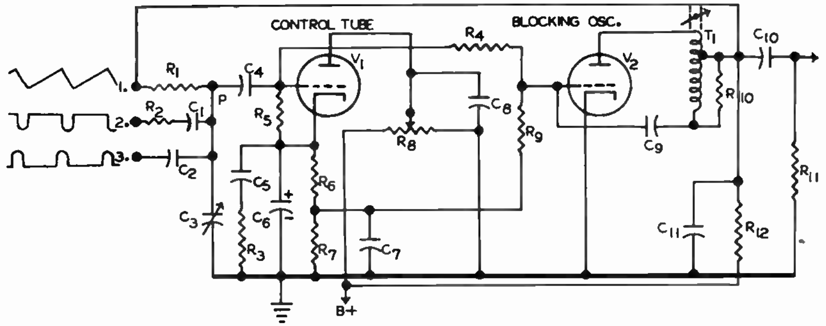

FIGURE 14

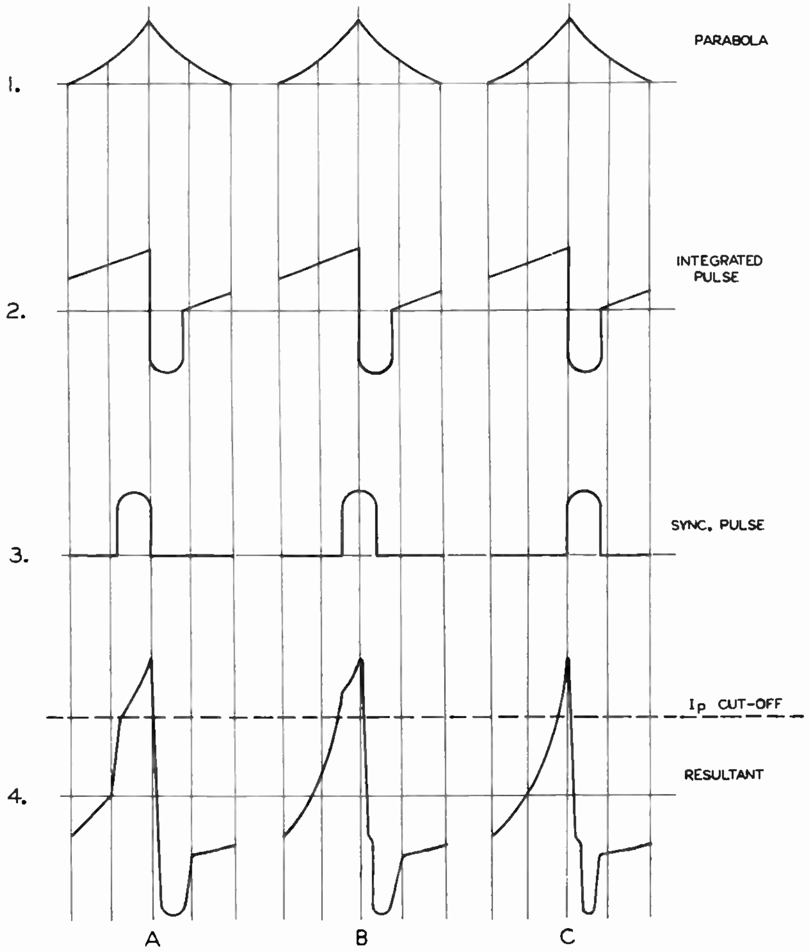

FIGURE 15

DeVRY Technical Institute

Formerly DeFOREST'S TRAINING, INC.

4141 WEST BELMONT AVENUE CHICAGO 41, ILLINOIS

QUESTIONS

Synchronization—Lesson TPC-13A

3

How many advance Lessons have you on hand?

Print or use Rubber Stamp.

Name

Student No.

Street

Zone

Grade

City

State

Instructor

Write your answers on the "Ans." line below each question. If more space is needed use reverse side of this page.

1. What two types of synchronizing pulse clippers are in common use?

Ans.

2. How do the various sync pulses of the same magnitude vary?

Ans.

3. When applied to the input, what type of circuit is employed to separate high frequency pulses from low frequency pulses?

Ans.

4. When applied to the input, what type of circuit is employed to separate low frequency pulses from high frequency ones?

Ans.

5. In the circuit of Figure 6, what is the purpose of the three section filter $R_{14}C_{11}$, $R_{15}C_{12}$, and $R_{16}C_{13}$?

Ans.

6. What is the purpose of a "horizontal afc" circuit?

Ans.

7. Name three common types of automatic frequency control systems.

Ans.

8. What is the purpose of the discriminator in afc arrangements?

Ans.

9. In the circuit of Figure 10A, what is the purpose of the capacitor C_2 and resistor R_4 combination?

Ans.

10. When the multivibrator frequency is too high, the phase relationship of Figure 11C is produced. As a result, the circuit of Figure 11A causes an increase or a decrease of multivibrator frequency?

Ans.

FROM OUR *Director's* NOTEBOOK

NEGLECT

I'm inclined to hold "Procrastinators" in slightly higher esteem than Negligent individuals because the former do give enough thought to their Responsibilities to postpone their performance. The Negligent simply IGNORE them.

That grand old philosopher, Doctor Johnson, declared that "those who think they can afford to be Negligent are not far from Poverty"—and who can contradict him?

Whatever we aim to achieve in any walk of life is to be had only by paying the price that has been placed upon it—the Full List Price. There are no "Discounts". We can't get what we want by paying only the part we want to pay.

The gardener who likes to plant the Seeds—who enjoys Watering the Plants and Plucking the Flowers will have but few flowers to pluck if there has been no Weeding or "Soil-stirring".

There's nothing in the world that will grow or increase with Neglect save Weeds, Mould, Rust, Ignorance and Poverty.

Plan no harvest that you may have to Neglect.

Yours for success,

W. C. DeVry

DIRECTOR

PRINTED IN U.S.A.

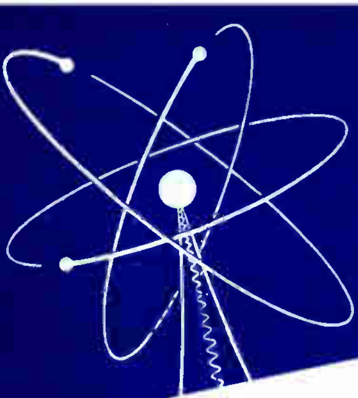

VIDEO FREQUENCY AMPLIFIERS

Lesson TPC-14A

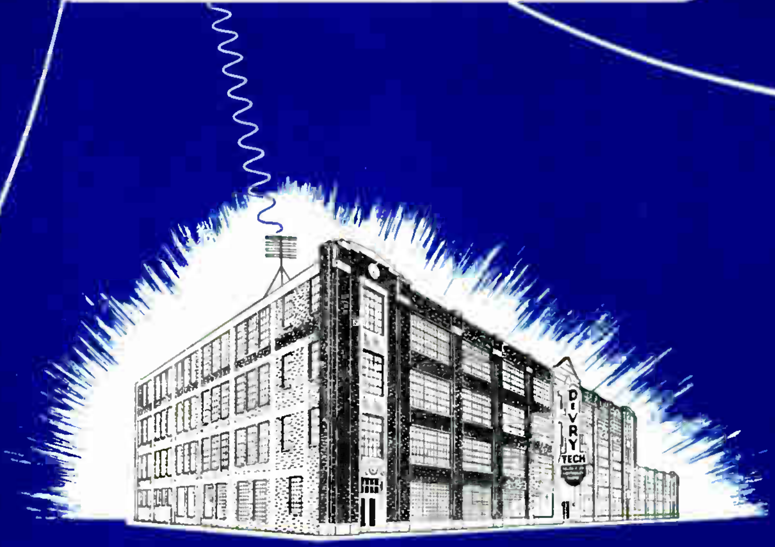

DeVRY Technical Institute
4141 W. Belmont Ave., Chicago 41, Illinois
Formerly DeFOREST'S TRAINING, INC.

VIDEO FREQUENCY AMPLIFIERS

ELECTRONICS
TELEVISION
DTI
DeVRY Technical Institute

4141 Belmont Ave.
Chicago 41, Illinois

In order to reproduce good, sharp pictures, low frequency compensation networks and peaking coils are needed in the television receiver video amplifier stages.

Courtesy Zenith Radio Corp.

Television

VIDEO FREQUENCY AMPLIFIERS

Contents

Do not delay; the golden moments fly.
—Longfellow

VIDEO FREQUENCY AMPLIFIERS

In a standard radio broadcast station, a microphone converts sound waves to corresponding changes of electric energy which then are amplified sufficiently to modulate the radio frequency carrier that is radiated from the antenna. In a superheterodyne type of receiver, the modulated carrier is amplified and then mixed with the output of an oscillator to produce a modulated intermediate frequency which again is amplified.

The i-f amplifier output is demodulated by a detector and the remaining changes, which correspond to those leaving the microphone, are increased in intensity by an audio amplifier. Finally, a speaker converts the changes to sound waves which closely duplicate those entering the microphone.

Television systems operate on exactly the same principles but are designed for light instead of sound. At the broadcast station, the television camera converts the light and dark areas of a scene into corresponding changes of electric energy. For sound, the frequencies of these variations go up to approximately 5000 cycles per second but for television they cover the sound frequencies and extend up to approximately 4 megacycles. This range is known as VIDEO FREQUENCIES. Like the sound or audio, the video frequencies are amplified sufficiently to modulate the radio frequency carrier that is radiated from the broadcast antenna.

The television receiver operates on the same plan as those designed for broadcast radio except that the r-f, i-f, and v-f amplifier stages must respond to a much wider band of frequencies. This is especially true of the video amplifier which, like the audio amplifier in a radio receiver, is connected between the detector and output circuits. Thus, the video amplifier increases the intensity of the video frequencies from the detector output to the level required on the picture tube control grid.

Because the video frequencies cover a range from less than 30 cycles per second to approximately 4 megacycles, the circuit must be designed to provide uniform gain over this wide band. Since it is impractical to design an inductance which permits acceptable frequency response at both high and low frequency ends of the video band, transformer and impedance coupled circuits are not employed in video amplifiers. Although resistance-capacitance coupling is not ideal, certain corrective measures enable the resistance coupled circuit to provide satisfactory v-f amplification.

EQUIVALENT AMPLIFIER CIRCUITS

In electron tube amplifiers, the various circuit components provide either a path for the signal currents; a means of applying the proper d-c operating voltages to the tube elements; or both. When considering the frequency response, only the signal paths are of concern, therefore in some schematic diagrams it is helpful to omit the components which do not directly affect the amplification of the signal voltages. To further help in understanding how the circuit works, the plate resistance r_p of the electron tube may be represented by a resistor symbol. Such a circuit diagram is called an EQUIVALENT CIRCUIT.

To show that this circuit diagram actually is equivalent to the more conventional schematic, several steps of the conversion process are given in Figure 1. Figure 1A shows a conventional schematic of a resistance coupled amplifier in which tube V_1 is coupled to tube V_2 by plate load resistor R_L, coupling and d-c blocking capacitor C_c, and grid resistor R_g. Also included in this diagram are the cathode circuit components of both tubes, the low voltage power supply, and its bypass capacitor C_f.

In any single amplifier stage, frequency response considerations concern the nature of the variations in output voltage with constant input voltage over the desired frequency band. Thus, as the V_1 output is the signal voltage appearing across the grid resistor of V_2, only this much of the circuit need be shown in an equivalent circuit diagram. This simplification is illustrated in Figure 1B where e_g represents the input voltage, and e_o the output.

In the cathode circuit, resistor R_k is bypassed by capacitor C_k. Therefore, except at the lowest frequencies, C_k serves as the signal path, while R_k is needed merely to maintain the proper d-c potential on the cathode. Likewise, in the plate circuit, capacitor C_f forms a path for the signal currents which are thus bypassed around the plate d-c supply.

To emphasize the importance of capacitors C_k and C_f insofar as the signal paths are concerned, the diagram of Figure 1B has been rearranged in Figure 1C to give them a more prominent position. Also, the plate resistance of V_1 is represented by resistor r_p. The a-c plate voltage is of greater magnitude than the input voltage e_g. To represent this process the tube is considered as an a-c generator as indicated by the letter "G" inside the tube symbol.

At the very low frequencies, the reactances of capacitors C_k, C_f, and C_c are relatively high and their effects on the output of the amplifier will be explained later in this lesson. However, at all other frequencies, the reactances of these capacitors are so low that they can be neglected, with the cathode of the tube and the B+ end of R_L being considered at ground potential so far as the signal voltages are concerned. In other words, R_k and the B supply are thought of as being "shorted" by the bypass capacitors.

Medium Frequencies

These conditions are indicated in the arrangement of Figure 1D which represents the "equivalent circuit" of the amplifier at medium frequencies. Since the "shorted" components have no effect on the signal voltages, they are omitted and the tube, simplified to the symbol of an a-c generator "G," together with the B+ end of resistor R_L are grounded directly through the low reactance paths provided by the bypass capacitors as explained. Therefore, since they have no effect on the signal, R_k and the B supply are omitted in Figure 1D. Also having negligible reactance at medium frequencies, coupling capacitor C_c is omitted, with R_L and R_g connected directly to r_p. Thus, insofar as the signal is concerned at medium frequencies, R_L and R_g are actually in parallel across the output of the amplifier stage.

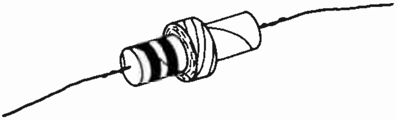

Small coils wound directly on the resistor which shunts them are used for frequency compensation in television receivers.

In Figure 2A, the circuit of Figure 1D is redrawn with R_{eq} representing the equivalent resistance of R_L and R_g in parallel. The voltage applied by generator G is equal to the a-c grid voltage e_g multiplied by the amplification factor μ of the tube and, therefore, it is shown as μe_g. To clarify the conditions in the output circuit the symbols are rearranged again in Figure 2B to show that the alternating plate current I_p is determined by the amplitude of the applied voltage μe_g and the total resistance of r_p and R_{eq} in series.

For a triode amplifier tube, with its comparatively low plate resistance, I_p may be stated in terms of Ohm's Law as:

$$I_p = \frac{\mu e_g}{r_p + R_{eq}}.$$

Solving the equation for e_g gives:

$$e_g = \frac{I_p\,(r_p + R_{eq})}{\mu}.$$

Also, using Ohm's Law, the output voltage e_o may be calculated from:

$$e_o = I_p R_{eq}.$$

The voltage gain or amplification of any stage is the ratio of the output signal voltage e_o, to the input grid voltage e_g. Written as an equation, the amplification A_v is:

$$A_v = \frac{e_o}{e_g}.$$

That is, with a signal output, e_o, of 100 volts and input, e_g of 4 volts, an amplifier has a gain A_v equal to 100÷4, or 25.

By substituting the right members of the equations for e_g and e_o, in the preceding equation, the stage gain of the resistance coupled triode amplifier can be expressed in convenient terms as follows:

$$A_v = \frac{I_p R_{eq}}{\dfrac{I_p (r_p + R_{eq})}{\mu}}$$

which can be rearranged to:

$$A_v = \frac{\mu R_{eq}}{r_p + R_{eq}}.$$

Expressed in words, this equation states that AT MID FREQUENCIES THE AMPLIFICATION A_v IS DIRECTLY PROPORTIONAL TO THE MU OF THE TUBE AND THE EQUIVALENT RESISTANCE OF THE PLATE LOAD R_{eq}, AND INVERSELY PROPORTIONAL TO THE SUM OF R_p AND R_{eq}.

For a pentode amplifier tube, the plate resistance is so high compared to the load resistance that the alternating plate current is determined almost entirely by μe_g and r_p. In this case, the equation for I_p may be written as:

$$I_p = \frac{\mu e_g}{r_p}.$$

Solving for e_g:

$$e_g = \frac{r_p I_p}{\mu}.$$

Therefore, substituting the right members of the equations for e_o and e_g in the gain equation states the stage gain of the resistance coupled pentode amplifier as:

$$A_v = \frac{I_p R_{eq}}{\dfrac{r_p I_p}{\mu}},$$

which reduces to:

$$A_v = \frac{\mu R_{eq}}{r_p},$$

and can be written as:

$$A_v = \frac{\mu}{r_p} \times R_{eq}.$$

Since the grid-plate mutual conductance of a tube is equal to:

$$G_m = \frac{\mu}{r_p}$$

G_m can be substituted for μ/r_p in the equation to give:

$$A_v = G_m R_{eq}$$

as a simple expression for the gain of a pentode stage.

This equation states that THE VOLTAGE AMPLIFICATION A_v IS DIRECTLY PROPORTIONAL TO THE MUTUAL CONDUCTANCE G_m OF THE TUBE AND THE EQUIVALENT RESISTANCE OF THE PLATE LOAD R_{eq}.

Low Frequencies

As mentioned, capacitors C_k, C_f, and C_c of Figure 1A affect the amplifier response at low frequencies, therefore all of these could be included in a diagram of the equivalent amplifier circuit at low frequencies. However, the effects of C_k and C_f are so slight compared to that of coupling capacitor C_c that usually it is the only one included as shown in Figure 3A. Under these conditions, resistors R_L and R_g no longer can be considered in the simple parallel relationship that they have at medium frequencies.

To make a comparison with the circuit of Figure 2B, the equivalent circuit of Figure 3A has been rearranged as shown in Figure 3B. Here, the output voltage e_o is not equal to the I_pR_{eq} given for medium frequencies but is equal to the drop across R_L minus the drop across coupling capacitor C_c. Thus, at low frequencies, the increased reactance of the coupling capacitor reduces the output voltage e_o. How much reduction occurs depends upon the ratio of the coupling capacitor reactance to the resistance of the grid resistor R_g in series with the parallel combination of R_L and r_p. As a general ratio, the low frequency output may be expressed as:

$$\frac{A_v \text{ at low frequencies}}{A_v \text{ at medium frequencies}} = \frac{1}{\sqrt{1+(X_{C_C}/R_s)^2}}$$

when—

$X_{C_C} = 1/\ (2\pi fC_c)$ = reactance of coupling capacitor C_c

$R_s = R_g + \dfrac{R_L\, r_p}{R_L + R_p}$ = equivalent resistance of R_g, R_L, and r_p.

For example, if $X_c = R_s$, then the low frequency output voltage is 70.7% of the medium frequency value.

Tube Capacitances

A small but definite capacitance exists between the various elements of an electron tube, since each element functions as a single plate of a simple capacitor. Other capacitances and capacitance effects also are associated with a tube in a circuit. The total for all of these may be divided into two general classifications: (1) INPUT CAPACITANCE C_I, and (2) OUTPUT CAPACITANCE C_O.

The input capacitance C_I may be divided into four components: (1) the cold input capacitance C_{cd}, (2) the hot input capacitance C_{ht}, (3) the effect of the grid-to-plate capacitance C_{gp}, and (4) the stray capacitance C_s.

The COLD INPUT CAPACITANCE consists of the grid-to-cathode capacitance plus that of the control grid to any other grounded elements such as the suppressor and screen grids. This is the value obtained when measurements are taken with the tube biased to cutoff.

The HOT INPUT CAPACITANCE is actually a grid circuit condition due to the effect of the normal flow of emitted electrons from the cathode to the plate of the tube. Approaching the grid they repel other electrons already in it, causing them to move through the external circuit in a direction toward the cathode. After the emitted electrons pass the grid and are moving away from it towards the plate, the displaced electrons return through the external circuit to their original position. This movement of electrons in the external grid circuit is called a DISPLACEMENT CURRENT.

With the control grid maintained at a constant potential, there is no variation in the number of emitted electrons which leave the cathode and pass through the grid on their way to the plate. Thus, with an equal number of electrons moving toward and away from the grid, there is no displacement current in the grid circuit.

Repeating the explanations of the earlier lessons, the flow of electrons between the cathode and plate is controlled by the grid potential. As the grid is made more positive, the flow is increased and as the grid is made more negative the flow is decreased. Thus, while a signal voltage is driving the control grid more positive and the flow of emitted electrons is increasing, there will be more of them moving toward the grid than away from it. Under these conditions, the displacement flow of electrons in the grid circuit will be toward the cathode.

When the signal voltage reverses polarity and is driving the control grid more negative, the flow of emitted electrons will decrease and there will be more of them moving away from the grid than toward it. Under these conditions, the flow of displacement electrons in the external circuit will be toward the grid. Thus, when an a-c signal voltage is applied to the control grid circuit, variations in the instan-

The 6AR5 has a G_m of 2400 µmhos which makes it suitable as the video amplifier output stage.
Courtesy Hytron Radio and Electronics Corp.

taneous numbers of emitted electrons moving toward and away from the region of the grid cause an alternating displacement current in the external grid circuit.

This displacement current leads the applied grid voltage, e_g, by 90°, and therefore, it produces the equivalent of the condition in a capacitive circuit. Since this condition exists only when a signal voltage is applied, the final result is the same as though a capacitance, which would permit the same displacement, was physically added to the grid circuit.

The GRID TO PLATE CAPACITANCE may be expressed by the term $C_{gp}(1+A_v)$, where A_v equals the stage gain. For a triode tube having grid-to-plate capacitance of 4 micromicrofarads and a gain of 24, this component of C_I is $4(1+24) = 4 \times 25 = 100$ micromicrofarads, a large enough capacitance to be of considerable importance. Pentode tubes have comparatively small values of C_{gp}, therefore the added capacitance due to this effect is much less important.

The fourth source of C_I is the STRAY CIRCUIT CAPACITANCE between the socket connections, grid leads, and chassis, etc. In the form of an equation, the total input capacitance of an electron tube may be stated as:

$$C_I = C_{cd} + C_{ht} + C_{gp}(1 + A_v) + C_s.$$

The OUTPUT CAPACITANCE C_O consists of the tube plate-to-cathode capacitance plus all others in shunt with the output circuit, such as capacitance between the plate and suppressor grid, the plate and screen grid, the plate leads and the chassis.

High Frequencies

At high frequencies, the tube capacitances have an important effect on the amplifier gain. In Figure 4A, capacitors C_O and C_I represent the V_1 output and V_2 input capacitances, respectively. Considering the B+ at signal ground potential, C_O is in parallel with R_L, and C_I is in parallel with R_g. Following the plan of Figure 1, the components of Figure 4A have been rearranged into Figure 4B and then to Figure 4C where C_T represents the total capacitance of C_O and C_I in parallel and R_{eq} represents the total resistance of R_g and R_L in parallel.

In Figure 4C, the total load impedance Z_L consists of R_{eq} in parallel with C_T and, in the form of an equation, its value may be stated as:

$$Z_L = \frac{R_{eq} \times X_{CT}}{\sqrt{R_{eq}^2 + X_{CT}^2}}$$

where $R_{eq} = (R_L R_g)/(R_L + R_g)$
$X_{CT} = 1/(2\pi f C_T)$
$C_T = C_I + C_O$

Substituting Z_L for R_{eq} in equation $A_v = G_m R_{eq}$:

$$A_v = G_m Z_L$$

which is the expression for the high frequency amplification of a resistance coupled pentode stage. However, the load impedance Z_L depends upon the reactance X_{CT} which, in turn, varies inversely with frequency. Therefore the higher the frequency, the lower the gain.

As a general ratio, the high frequency response may be expressed as:

$$\frac{A_v \text{ at high frequencies}}{A_v \text{ at medium frequencies}} = \frac{1}{\sqrt{1 + (R_T/X_{CT})^2}}$$

where $X_{CT} = 1/(2\pi f C_T)$ = reactance of total shunting capacitance C_T

R_T = equivalent resistance of R_g, R_L, and r_p all in parallel.

For example, when $X_{CT} = R_T$, the high frequency output is 70.7% of its medium frequency value.

FREQUENCY DISTORTION

In general, r-f, i-f, a-f, and v-f amplifiers are designed to operate with uniform amplification over definite bands of frequencies to provide "flat top" response. Any variation in the gain of an amplifier, within its desired pass band, is called frequency distortion. The frequency range or width of the required pass band varies widely in the different services. For example, standard AM broadcast stations are allocated a 10 kc channel, FM broadcast stations a 200 kc channel, and television broadcast stations a 6 mc channel. The common forms of r-f and i-f amplifiers include tuned circuits designed to provide an approximately even response over the required band pass, the range which is but a comparatively small percentage of their mean operating frequency.

For example, the common 455 kc i-f amplifier in a superheterodyne broadcast radio receiver has a 10 kc pass band from 450 kc to 460 kc. Thus it requires only a 1.1% increase and decrease of 455 kc to cover the band. In this same type of receiver, the audio amplifier has a pass band of about 50 cycles to 5000 cycles which is approximately half the frequency range of the i-f amplifier. However, the highest frequency is 100 times as great as the lowest frequency. For a high fidelity audio amplifier, with a pass band of 30 to 15,000 cycles per second, the highest frequency is 500 times as great as the lowest frequency.

As explained previously, the video amplifier of a television receiver should have a pass band of 30 cycles to 4,000,000 cycles per second in which the highest frequency is 133,000 times as great as the lowest frequency. To provide a pass band of this width, the resistance-capacitance coupling circuits of the amplifier must be compensated to offset the inherent capacitance effect which reduce the gain at the higher and lower frequencies. As the causes of low frequency attenuation differ from those of high frequency attenuation, they are explained separately in the following paragraphs.

Low Frequency Attenuation

In the video amplifier circuit of Figure 5A, the input e_I is applied through capacitor C_c to the grid of tube V_1, the output of which is coupled through choke L_2 and capacitor C_b. In a circuit of this type, there are four main causes for reduced amplifier output at the low frequencies. The first cause is that a PORTION OF THE APPLIED VOLTAGE E_I IS DROPPED ACROSS THE INPUT COUPLING CAPACITOR C_c and the remainder across the grid resistor R_g. That is, C_c and R_g make up a voltage divider so that e_I is divided into the two parts, e_{C_c} and e_{R_g} as indicated. Thus, the signal voltage across the grid resistor is somewhat less than the total applied voltage e_I.

Many nuclear instruments also require wide range amplifiers to amplify the short pulses encountered during normal application. This particular instrument measures the time required for a predetermined number of particles to ionize a Geiger tube.

Courtesy Tracerlab Inc.

At medium and high frequencies, the reactance of C_c is so low that the voltage drop e_{C_c} is negligible and practically all of the input e_I appears across R_g. However, AT THE LOW FREQUENCIES, THE REACTANCE OF C_c is greater and the voltage drop e_{C_c} is a considerable fraction of the input signal e_I.

The second cause is due to the fact that THE CATHODE CIRCUIT IMPEDANCE INCREASES AS FREQUENCY DECREASES. The cathode circuit impedance Z_k may be expressed mathematically as follows:

$$Z_k = \frac{R_k X_{C_k}}{\sqrt{R_k^2 + X_{C_k}^2}}$$

in which X_{C_k} is the reactance of C_k. Since X_{C_k} equals $\frac{1}{2\pi f C_k}$, this reactance rises with decreasing frequency and, therefore, Z_k increases when the frequency decreases.

So far as the signal voltage e_{R_g} is concerned, the grid-cathode part of the tube is in series with the parallel cathode circuit components, R_kC_k. This results in e_{R_g} being divided into the fractions e_g and e_{R_k} as indicated. That is, the voltage divider action occurs again, and the fraction e_{R_k} is lost as far as amplification is concerned.

Therefore e_g is the only part of the input signal voltage actually applied between the grid and cathode of the tube, and it is desirable that the cathode circuit impedance have a low value so that e_{R_k} is small and e_g is a large fraction of e_{R_g}.

The third cause is due to THE INCREASE IN THE SCREEN GRID CIRCUIT IMPEDANCE WITH DECREASE IN FREQUENCY. Capacitor C_p should maintain the B+ end of resistor R_s at signal ground potential so that R_s and screen bypass C_s are effectively in parallel for signal currents. This is indicated by the dashed line connecting R_s and C_s. Therefore, the screen grid circuit impedance Z_{g_2} can be stated mathematically as follows:

$$Z_{g_2}. = \frac{R_s\, X_{C_s}}{\sqrt{R_s^2 + X_{C_s}^2}}$$

in which X_{C_s} is the reactance of capacitor C_s. Also, as in the cathode circuit, impedance Z_{g_2} becomes higher with decreasing frequencies.

The increase of Z_{g_2} at low frequencies causes fluctuations of the screen direct voltage, and the resulting variations of current cause the screen potential to swing toward negative when the control grid is swinging toward positive, and vice versa. This action reduces the effect of the control grid on the plate current, and therefore, it is a type of degeneration.

The fourth cause of low frequency attenuation is THE VARIATION OF THE REACTANCE OF THE POWER SUPPLY FILTER COMPONENTS. This reactance increases with decreasing frequency, resulting in degeneration like that explained for the screen grid circuit. However, the power supply affects both the screen and plate voltages.

Low Frequency Compensation

Still referring to Figure 5A, with proper choice of components, the voltage divider action of C_cR_g can be reduced. The capacitance of C_c is made large so that its reactance is small, and the lost voltage e_{C_c} is as low as possible. Also, to cause most of e_I to appear across R_g, a large grid resistance is used.

The attenuation due to the cathode circuit impedance is minimized in one of the following ways:

1. Eliminating R_k and C_k and grounding the cathode—either grid leak or fixed bias then being used.

2. Eliminating C_k. This results in a loss in stage gain due to the degeneration effect of the unbypassed cathode resistor, but the loss is constant over the frequency band.

3. Making the capacitance of C_k very large and accepting the small low frequency attenuation which still occurs.

The screen grid circuit of the video amplifier may be corrected by employing a bypass capacitor C_s with a large capacitance. A fourth measure employed for correction of low frequency response is the compensation network R_fC_f. For signal frequencies, capacitor C_p effectively grounds the B+ end of R_f so that this resistor and C_f are in parallel as indicated by the connecting dashed line.

As in the cathode and screen grid circuits, the parallel combination R_fC_f has an impedance Z_f which rises with decreasing frequencies. However, Z_f is in series in the plate circuit and therefore results in an increase in total plate load impedance with decreasing frequencies. Being proportional to the plate load impedance, the gain of the amplifier is higher at low frequencies than at medium frequencies. Thus, R_f and C_f compensate for the low frequency attenuation in the grid, cathode, and screen circuits of the video amplifier tube, and for that due to the power supply filter components also.

High Frequency Attenuation

In Figure 5A, C_o represents the output capacitance of V_1, and C_i the input capacitance of the following stage. As explained, the reactance X_{CT} of C_o and C_i in parallel is a component of the total load impedance Z_L in the plate circuit of the tube. The total impedance of a parallel circuit is determined mainly by the impedance of its smallest branch. Therefore, at the high frequencies, Z_L is approximately equal to X_{CT}. Since X_{CT} decreases with rising frequency, Z_L and the stage gain are reduced as the frequency increases. Thus, the output capacitance C_o and the input capacitance C_i cause the greatest high frequency attenuation.

High Frequency Compensation

For a given amplifier circuit, there is a certain high frequency f_s at which X_{CT} is equal to R_T and the output is 70.7% of its medium frequency voltage. However, since X_{CT} is inversely proportional to frequency, the higher the desired value of f_s, the lower the reactance of X_{CT} and the lower must be the resistance of R_T if the output is not to drop below the 70.7% value.

Since r_p and R_g are determined by the tubes employed, R_T may be reduced only be decreasing R_L. In fact, in order to obtain wide band amplification, R_T must be made so low that the tube plate resistance r_p and the grid leak resistance R_g may be disregarded and the equation reduces to:

$$A_v = G_mR_L,$$

which is the expression for the medium frequency gain of a wideband amplifier.

Thus, in Figure 5A, if V_1 has a transconductance of 1650 micromhos (.00165 mho) and R_L has a value of 100,000 ohms, the medium frequency gain will be: $A_v = .00165 \times 100{,}000$ or 165.

Assuming a total shunt capacitance of 16 micromicrofarads, at 100 kc X_{C_T} is approximately equal to R_L and the output is 70.7% of its medium frequency voltage. For higher frequencies, X_{C_T} will decrease and there will be a corresponding decrease in the amplifier output.

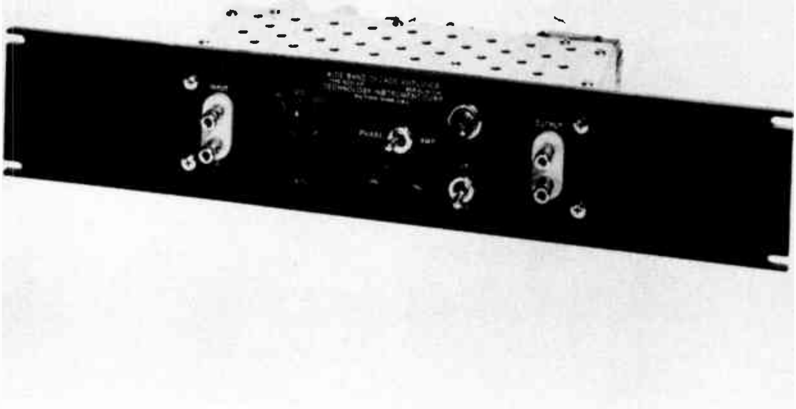

A wide band amplifier designed for rack mounted equipment.

Courtesy Technology Instrument Corp.

At 4 mc, X_{C_T} will be equal to approximately 2500 ohms and in order to obtain an output equal to 70.7% of the medium frequency value at this frequency, R_L must be made the same value. However, then the stage gain is $A_v = .00165 \times 2500$ or 4.1, which is only 1/40 of that obtained when R_L was 100,000 ohms.

As this equation shows, stage gain is proportional to transconductance as well as plate load resistance. With this in mind, tubes such as the type 6AC7 have been specially designed for television use. Indicating the grid control over plate current, the transconductance of the 6AC7 is very high with a G_m of 9000 micromhos or .009 mho.

In Figure 4A, if the total shunting capacitance is 25 $\mu\mu$fd, the reactance at 4 mc is 1600 ohms. With a 6AC7 type tube for V_1 and a 1600 ohm resistor as R_L, the gain is $.009 \times 1600$ or 14.4, with a 4 mc output equal to 70.7% of the medium frequency value. Thus, although it is low compared to the gain of audio amplifiers, video stage amplification must be sacrificed because of the wide band frequencies to be passed.

Due to its very high G_m, 9000 micromhos, the 6AC7 can provide sufficient TV receiver video gain as a single stage amplifier.

Courtesy Sylvania Electric Products Co.

Besides low resistance plate load resistors and high transconductance tubes, special methods of interstage coupling are used to compensate for the attenuation of high frequencies. One method is to connect coil L_1, Figure 5A, in series with R_L, as shown. The reactance of L_1 rises with frequency, causing an increase in total load impedance Z_L and, therefore, stage gain.

In circuits in which coil L_2 is not employed, capacitance C_I adds to C_o to give a total shunt capacitance C_T. Neglecting R_L, C_T forms a parallel circuit with L_1 the inductance of which is so chosen that this parallel circuit is resonant at a frequency f_r, somewhat above the band over which uniform response is desired. Thus, as shown by the curve of Figure 5B, the amplifier response will reach a maximum at f_r and will be flat over the desired range of high frequencies. Because of the rise in the response at f_r, coil L_1 is called a PEAKING COIL, and since L_1 is in shunt with C_o and C_I, this method of high frequency compensation is called SHUNT PEAKING.

Known as SERIES PEAKING, another system employs the coil L_2 connected as shown in Figure 5A. In circuits where L_1 is not employed, the lower end of R_L is maintained at signal ground potential by capacitor C_f. L_2 isolates C_I and C_o, and therefore, only C_o is directly in parallel with R_L.

Here the resistance of R_L may be chosen with reference to the reactance of C_o and, as this reactance is higher than that of $C_o + C_I$, R_L may have more resistance, resulting in a higher stage gain. At the high frequencies, the reactance of coupling capacitor C_b, is negligible, and the inductance of L_2 is chosen so that this coil and capacitance C_I form a series resonant circuit from the plate of V_1 to ground. L_2 and C_I are made resonant to some frequency f_r above the video band and thus the voltage across C_I is maximum at f_r, as indicated by the output-vs-frequency curve of Figure 5B.

Still greater amplification may be obtained by using both coils L_1 and L_2, in which case the system is termed SERIES-SHUNT PEAKING. As before, coil L_2 forms a series resonant circuit with C_I, while L_1 forms a parallel resonant circuit with C_O, both circuits being tuned to a frequency somewhat above the video band. This arrangement permits the resistance of R_L to be as much as 1.8 times that used in simple shunt peaking, with the stage gain being increased in like proportion. A disadvantage is that this system is critical with respect to the component values and the ratio of C_O to C_I. Unless this ratio and the various components are exact, the high gain is not obtained.

As an example of the use of frequency compensating components in commercial equipment, Figure 6 shows the video frequency amplifier circuits of a typical model television receiver. Operating as a diode detector, the V_1 section of a double triode tube functions as the video detector having the load resistor R_1 and shunt peaking coil L_1. The output of the detector is taken from the plate end of L_1 and coupled directly through series peaking coil L_2 to the grid of the first v-f amplifier V_2.

Although it is not indicated in the diagram, the output capacitance of tube V_1, in parallel with the load L_1R_1, forms the i-f filter. To eliminate low frequency attenuation in its circuit the cathode of V_2 is grounded directly. Due to the direction of current in V_1, the tube end of L_1 is negative with respect to ground and the grid bias for V_2 is obtained from this point through L_2.

The plate circuit of V_2 contains shunt peaking coil L_3, load resistor R_2, a low frequency compensating network R_3C_1. The output from this stage is coupled through series peaking coil L_4 and capacitor C_2 to the grid of the second v-f amplifier stage, V_3. The plate circuit of V_3 includes shunt peaking coil L_5 in series with load resistor R_5, and direct coupling through series peaking coil L_6 to the grid of picture tube V_4.

From the cathode of V_4, the signal circuit is completed through capacitor C_3 to ground. With direct coupling from the plate of V_3, the grid of V_4 is at a positive potential with respect to ground. Therefore, to secure the proper operating conditions for the picture tube, the cathode is made more positive than the grid by supplying the cathode with a higher d-c potential from the slider on potentiometer P_1.

Up to this point, methods of high frequency compensation have been described in terms of what is known as "circuit network theory." However, design engineers also may approach the problem from the standpoint of "electric wave filter theory," in which case the video amplifier coupling circuit is considered a low pass filter. Although it may seem strange to deal with the problem of high frequency compensation by utilizing a low pass filter, it must be remembered that the video coupling circuit must provide uniform response to all frequencies below the "cutoff" at approximately 4 mc, and attenuate all higher frequencies.

Although the details of wave filter theory are not taken up here, Figure 7A shows the basic circuit of the type of filter designed from this theory for video amplifier coupling circuits. Known as a PI-TYPE, LOW-PASS FILTER, this arrangement may be designated also as a MID-SHUNT, CONSTANT K LOW-PASS FILTER. Briefly, the action is that, as frequency rises, the reactance of coil L_1 increases and the reactance of capacitors C_1 and C_2 decrease in such a way that the total impedance of the filter remains constant up to a point called the "cutoff frequency." All signals higher than the cutoff frequency are greatly attenuated. Mathematical equations have been derived which permit engineers to calculate the respective values of L_1, C_1, and C_2 for any desired cutoff frequency.

When a sharper cutoff characteristic is desired, the circuit of Figure 7A may be extended to include two or more sections connected in series or cascade. Known as a TWO SECTION CONSTANT K FILTER, Figure 7B, is employed commonly in video amplifier coupling circuits. In practical receiver circuits, the tube input, tube output, and stray circuit capacitances replace the capacitors indicated as C_1, C_2, and C_3.

A simplified drawing of this arrangement is given in Figure 7C, where C_1 indicates the output capacitance of the video amplifier tube, C_2 the input capacitance of the cathode ray tube, and C_3 the stray circuit capacitance. To obtain constant output, it is necessary that the impedance of the filter remain constant over the desired frequency band. However, it is characteristic of this type of filter to have a rising impedance as the signal frequencies approach the cutoff value. To reduce this rise of impedance near the cutoff frequency, resistor R_1 is shunted across L_1 and resistor R_L is placed in the load circuit with L_2. As negligible changes of frequency are caused by changes of resistance, the presence of the resistors limits the rise of impedance.

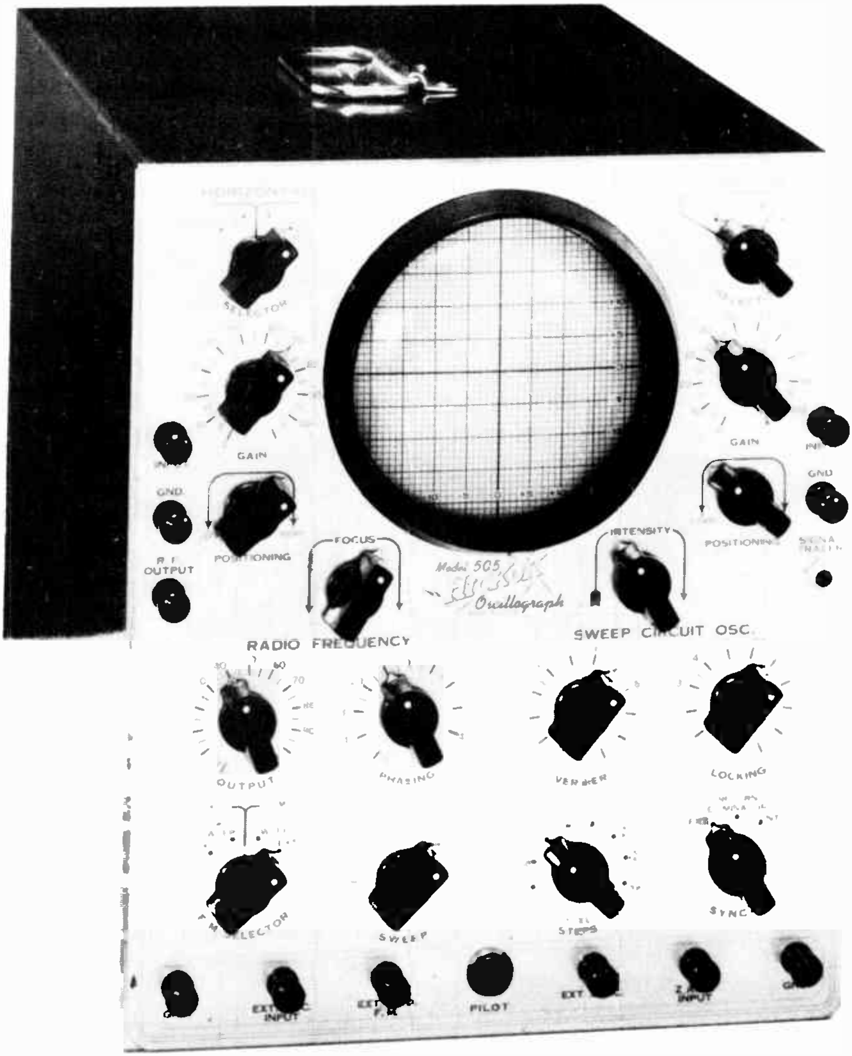

Many oscilloscopes use extended range amplifiers in the vertical circuit in order to amplify equally well most frequencies encountered in the use of the instrument.

Courtesy Hickock Electrical Instrument Co.

Figure 7C has been arranged to show how the various filter components correspond to their respective counterparts in the basic circuit of Figure 7B. However, in actual schematic diagrams of video amplifier coupling circuits, the arrangement of Figure 7C will seldom be found, as these diagrams are drawn on the plan of Figure 7D. Here, the filter capacitances are not indicated, and with the other components rearranged, there appears to be little likeness between this coupling circuit and the filter of Figure 7B. However, close inspection of both shows them to be electrically equivalent. In Figure 7D, L_1 and L_2 are in series with their junction coupled by capacitor C_4 to the grid of tube V_2. The output capacitance of V_1 forms the first capacitor of the filter, the input capacitance of V_2 forms the second capacitor, while stray capacitance between the supply end of L_2 and chassis form the third capacitor. R_1 is connected in parallel with L_1 as in Figure 7C, and for signal frequencies, the B+ end of R_L is grounded through C_5, therefore the electric location of R_L is the same in both circuits.

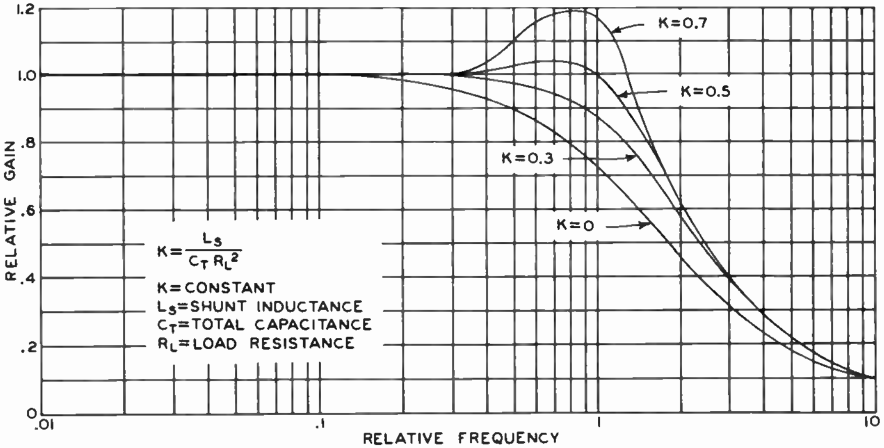

The gain curves of a shunt compensated amplifier for three different inductances.

Two-section, constant K filters are employed in the v-f amplifier section of the typical receiver of Figure 8. This receiver has two stages of v-f amplification between the diode detector V_1 and the picture tube V_4. Between V_1 and the first v-f amplifier tube V_2, the filter consists of coils L_2 and L_3, the output capacitance of V_1 plus that of capacitor C_1, the input capacitance of V_2 and the stray capacitances between the supply end of L_3 and the chassis. Resistors R_1 and R_2 correspond respectively to R_1 and R_L of Figure 7D. In Figure 8, R_2 serves also as the load resistor for the detector.

A second filter, used as the coupling circuit between V_2 and the video output amplifier, V_3, consists of L_4, L_5, aud the various tube and stray circuit capacitances. As explained above, resistor R_3 prevents the impedance of the first filter section rising near cut off. In like manner, R_4 prevents rising of the impedance of the second filter section and also serves as the plate load resistor for V_2. Resistor R_5 and capacitor C_4 function as a low frequency compensating network.

The frequency response of the V_3 stage is somewhat adjustable by means of the terminal strip and jumper arrangement which permits capacitor C_5 to be connected into or omitted from the circuit, as desired. With the jumper across terminals 1 and 2 of the terminal strip, C_5 is connected in parallel with cathode resistor R_8. With the jumper across terminals 2 and 3, C_5 is disconnected from the circuit.

Between V_3 and the picture tube, a third two-section constant K filter consists of tube and circuit capacitances, coils L_6 and L_7 and loading resistors R_9 and R_{10}. In this receiver, the cathode of the picture tube is connected directly to ground, and the grid is made negative with respect to the cathode by its connection through R_{11}, R_{12}, R_{13}, and R_{14} to the slider on potentiometer P_1.

CATHODE COUPLING

In the various types of circuits explained up to this time, the input signal has been applied to the grid circuits of the tubes and the output signal taken from their plate circuits. However, it is possible to apply the input signal to, or take the output signal from the cathode circuit of a tube. Such an arrangement is known as cathode coupling. It is used where it is desired to connect the tube to a low impedance input or output circuit when the frequency range of the signal is so great that the ordinary type matching transformer is impractical. Thus, the basic function of a cathode coupled electron tube is a matching transformer. A circuit in which the output is taken from the cathode is called a CATHODE FOLLOWER.

Both the grid and plate circuits of a tube have high impedance, while the cathode circuit has low impedance. Therefore, in order that a stage provide the desired impedance matching action, its cathode circuit must be employed for either input or output coupling.

For example, the output of a high impedance unit is coupled to the grid circuit of a follower stage, the cathode circuit of which is coupled to a low impedance unit. Working the other way, the output of a low impedance unit is coupled to the cathode circuit of an electron tube stage, the plate circuit of which is coupled to the input of a high impedance unit. With either arrangement, the cathode of the tube must "follow" the signal voltage variations and consequently a cathode bypass capacitor is not employed.

When the output is taken from the cathode circuit of the follower, although supplied its normal B+ voltage, the plate of the tube is operated at signal ground potential by means of a plate bypass capacitor. With this arrangement, the cathode follower does not amplify the signal voltage, the amplitude of the output being slightly less than that of the input.

When the input is applied to the cathode circuit, the control grid of the follower is connected directly to ground. Such an arrangement is known as a **GROUNDED GRID AMPLIFIER.**

In the more common types of amplifier circuits the input signal is impressed across a resistor connected between grid and ground while the negative bias voltage is developed across a resistor connected between cathode and ground, but the total or effective voltage is that which appears between grid and cathode. In this case, grounding the grid would eliminate the signal voltage but would not affect the bias voltage. However, if the input signal is impressed across the cathode resistor, both signal and bias voltages appear between the grounded grid and cathode.

Comparing the two arrangements, in the conventional circuit, the bias voltage maintains the cathode at some fixed positive potential above ground while the signal voltage impressed across the grid resistor, causes the grid potential to vary above and below that of the cathode and ground. In the grounded grid amplifier circuit, the grid is held at ground potential while the signal voltage causes the cathode potential to vary above and below its fixed bias value. As far as the total or effective grid-cathode voltage is concerned, the action is similar in both types of circuits and the signal is amplified by the tube.

When the cathode of a tube is used as the input element, the input capacitance is much lower than when the grid is used for this purpose. Therefore, frequently cathode coupling is employed for interstage coupling in television receiver v-f amplifiers to minimize the attenuation of high frequencies due to the shunting effects of input capacitance.

As an example, in the video amplifier circuit in Figure 9, video detector V_1 is coupled by a two-section filter to the grid of v-f amplifier V_2. Resistor R_2 forms the load resistor for V_1 and also functions as the grid resistor for V_2. The diode current causes the upper end of R_2 to be negative with respect to ground and this negative voltage is employed as the grid bias for V_2.

A filter, like those used in the circuit of Figure 8, couples the plate of V_2 to picture tube V_3. The output of V_2 is applied to the cathode of V_3, the control grid being maintained at signal ground potential by capacitor C_6. However, cathode circuit resistor R_7 is not bypassed, and therefore the cathode follows the signal voltage variations. To provide proper d-c voltage relations, the cathode is connected through R_7 to B+, while the control grid is made negative with respect to B+ by being connected to the slider on potentiometer P_1.

In the video amplifier circuit shown in Figure 10, the output is taken from the cathode circuit of the cathode follower stage. The first video frequency amplifier V_1 has a shunt peaking coil L_1 in series with its load resistor R_2. However, L_2 is not a series peaking coil, but is tuned to resonance with

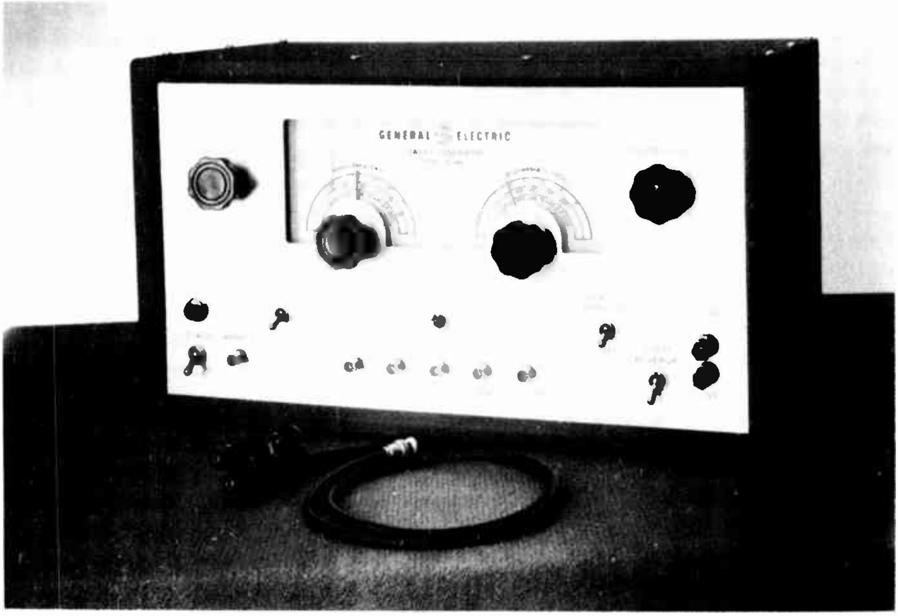

When used with an oscilloscope and a detector probe, a sweep generator determines the frequency response characteristics of a video amplifier.

Courtesy General Electric Co.

C_2 at 4.5 megacycles, thus forming a rejector circuit which prevents the passage of this frequency through the video amplifier. In any television receiver, when energy at the sound i-f reaches the video detector, it heterodynes with the picture i-f to form a 4.5 mc beat. If the 4.5 mc energy passes through the video amplifier and is applied to the picture tube control grid, it causes closely spaced vertical lines in the raster and gives the image the appearance of being observed through a screen.

The second v-f stage is the cathode follower, with the input signal applied to the grid of V_2, and the output taken from the slider on the cathode circuit potentiometer P_1. The plate is supplied with d-c voltage through R_5 but bypass capacitor C_4 maintains it at signal ground potential. This stage does not function as an amplifier since the magnitude of the signal voltage across potentiometer P_1 actually being somewhat lower than that of the input signal across grid resistor R_4.

As explained, the high frequency response of a video amplifier depends upon a low resistance plate load resistor, while a relatively good low frequency response requires a high resistance grid resistor. However, to permit the viewer to adjust the contrast of the reproduced image, receivers must include a means of varying the signal amplitude. A potentiometer employed for this purpose corresponds to the volume control in a sound receiver.

If this CONTRAST CONTROL were located in the grid or plate circuit of a video amplifier stage, the frequency response of the amplifier varies with its adjustment. In the circuit of Figure 10, the contrast control is in the cathode circuit and consists of the comparatively low resistance potentiometer P_1. The slider can be adjusted to provide the desired signal level without affecting the frequency response. Having the usual frequency-compensating units in its plate circuit, tube V_3 operates as the v-f output amplifier.

A third example of cathode coupling is shown in the video amplifier circuit of Figure 11. The first two stages are of conventional design, with detector V_1, 1st v-f amplifier V_2, and v-f output tube V_3 coupled by two-section constant K filters. In the cathode circuit of V_2, rheostat R_5 functions as the contrast control.

In this receiver, all of the v-f amplification is obtained in the V_2 stage, the output stage being operated as a cathode follower. The plate of V_3 is maintained at signal ground potential by capacitor C_4, and the output, taken from the cathode, is coupled through C_5 to the cathode of the picture tube, the control grid of which is maintained at signal ground potential by capacitor C_6. In this circuit, cathode follower V_3 provides a better impedance match between the high impedance plate circuit of V_2 and the lower impedance cathode circuit of V_4.

PHASE DISTORTION

In addition to providing uniform gain for all frequencies in its pass band, the video amplifier should cause equal phase shifts. Reviewing basic tube action, the a-c components of the plate current is in phase with the control grid voltage but 180° out of phase with the plate voltage. Therefore, in passing through an amplifier tube, the signal voltage has a theoretical phase shift of 180°. However, due to the capacitances associated with the circuits of a video amplifier, the signal current-voltage phase angles are not the same for all frequencies, therefore the angle of phase shift varies.

Due to this action, the amplifier delays some signal frequencies, with respect to others so that in the output, the phase angles differ from those of the input. This time delay in amplifying a signal frequency in respect to other signal frequencies is known as PHASE DISTORTION. In the amplification of sound signals, phase distortion is not so important but, in television it causes very noticeable and undesirable distortion of the reproduced image.

To illustrate this image distortion, the sine wave curves of Figure 12 represent video amplifier output signal voltages impressed across the control grid circuit of the picture tube. As explained previously, variations of control grid voltage cause corresponding changes of brightness along the scanned lines of the image on the screen. For simplicity it is assumed that signal between 0 and +10 volts produce light grey areas, above +10 volts white areas, between 0 and −10 volts dark grey areas and below −10 volts black areas.

Thus, in Figure 12A, signal voltage e_{g_1} produces the areas shown along scanning line 1. In the same way, with no phase distortion, signal voltage e_{g_2}, with a frequency twice that of e_{g_1}, produces the areas shown along scanning line 2. However, circuit capacitance effects may cause the higher frequency signal e_{g_2} to be delayed more than e_{g_1}, in which case the respective areas or elements along line 2 occur a definite small interval of time later than when no phase distortion exists. When the video signals pass through several stages of amplification a total phase difference of as much as 45 degrees may be produced as shown in Figure 12B.

The effects in the image are shown by a comparison of the respective pairs of scanning lines. The elements of scanning line 2, Figure 12B, are shifted horizontally to the right with respect to their normal positions shown in Figure 12A. If, as in practice, this effect is produced over the entire screen area, the picture is changed, or distorted.

For simplicity, only two scanning lines have been shown with a single sine wave signal applied to each. Actually, the television video signal consists of many components supplied to the picture tube control grid simultaneously during every scanning line. The intensity of each picture area is proportional to the resultant of all these signal components. Similar to the action of Figure 12, if the higher frequency components are delayed a longer period of time than the medium frequency components, the signal voltage and resulting reproduced image are distorted. Phase distortion is also a result of excessive lead angles of the low frequency signal components. This produces uneven shading of the background and false contrast effects between light and dark areas of the image.

As with frequency distortion, phase distortion at the high frequencies is a result of the effects of the circuit shunt capacitance, C_O and C_I, Figure 5A. At the low frequencies, it is a result of the effects of the coupling, cathode bypass, screen bypass, and power supply filter capacitors, C_c, C_k, C_s, and C_p, respectively.

Fortunately, the methods employed to obtain wide frequency response are effective in minimizing phase distortion also. As mentioned, these include the use of tubes having low interelectrode capacitances, low value plate load resistors, high value coupling and bypass capacitors and grid resistors, as well as the various compensating components and filters described. Although minor variations in peaking coils, etc., can be made to favor the phase response over the frequency response, or vice versa, a compromise of values does give good performance for both.

STUDENT NOTES

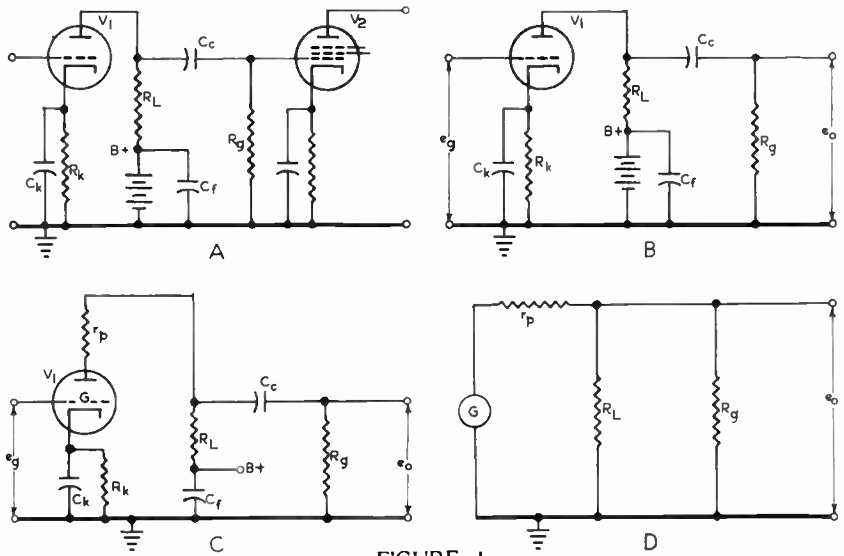

FIGURE 1

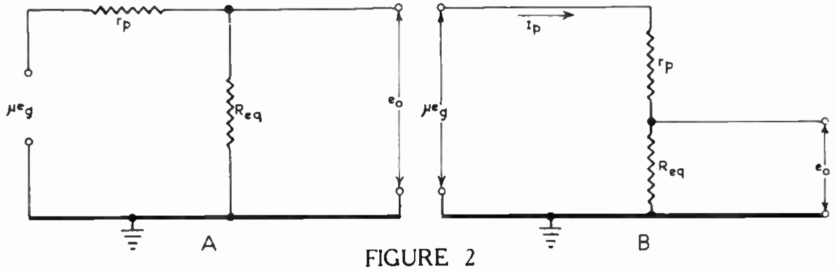

FIGURE 2

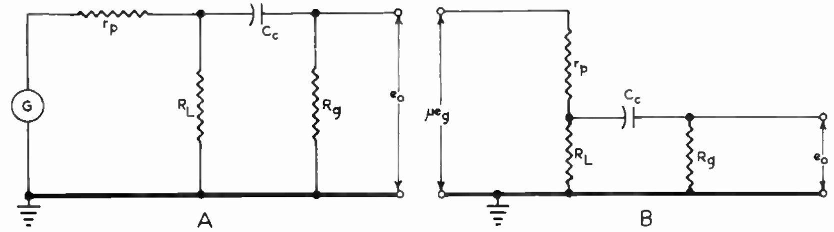

FIGURE 3

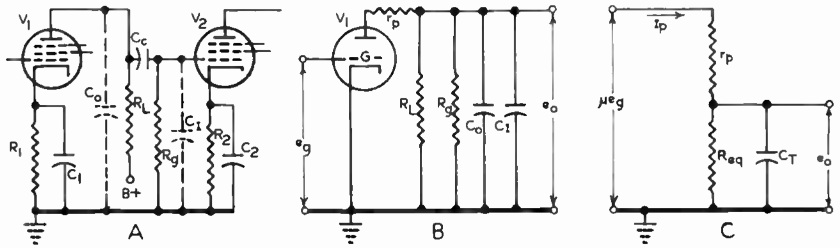

FIGURE 4

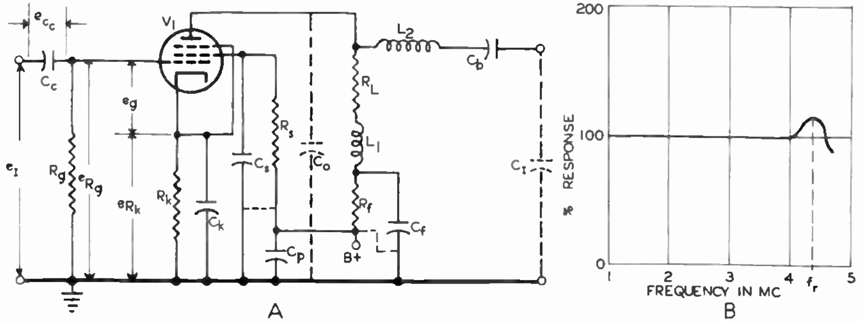

FIGURE 5

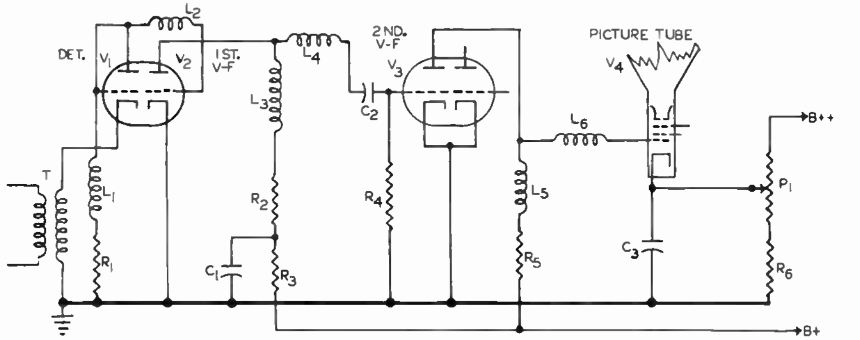

FIGURE 6

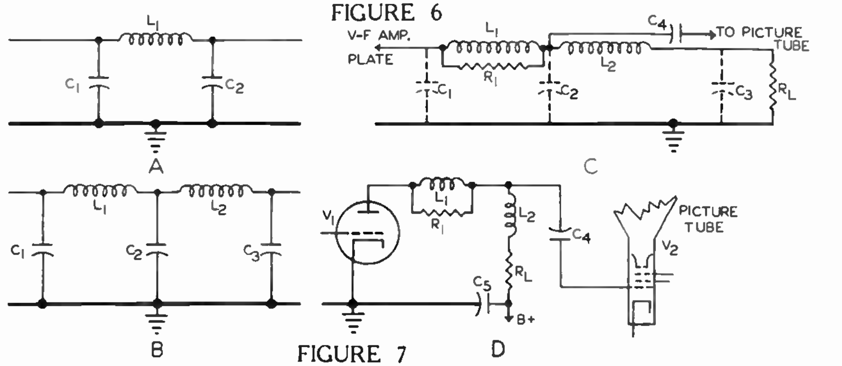

FIGURE 7

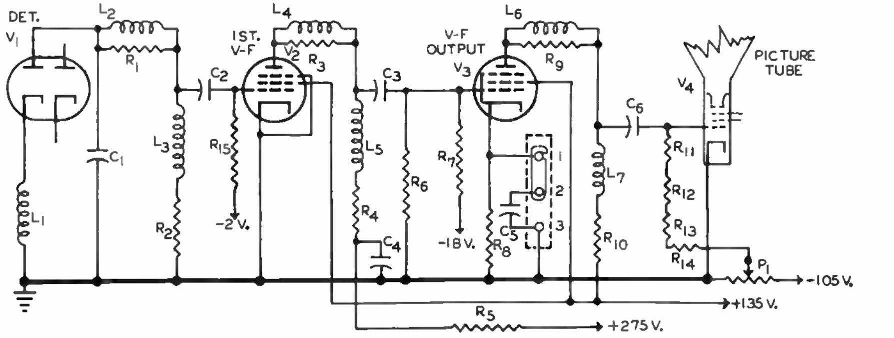

FIGURE 8

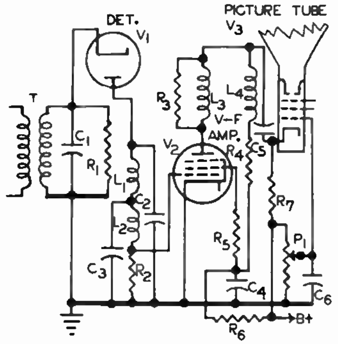

FIGURE 9

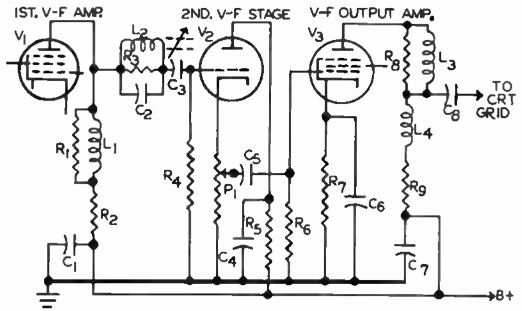

FIGURE 10

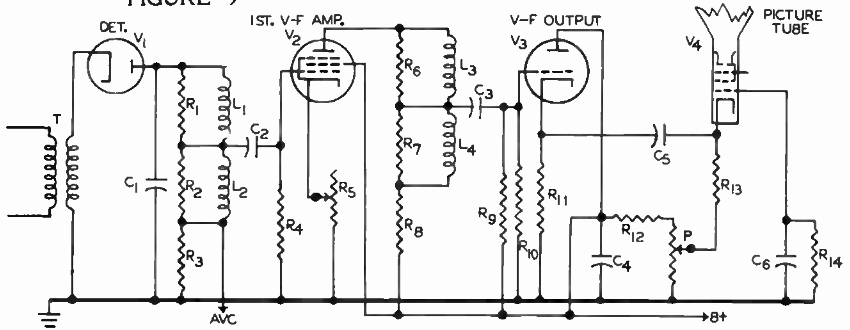

FIGURE 11

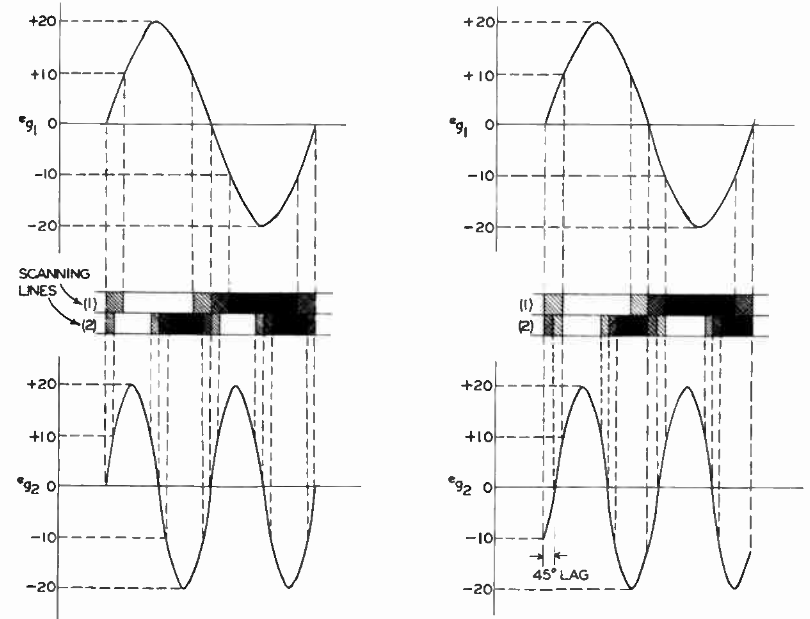

A

B

FIGURE 12

DeVRY Technical Institute

Formerly DeFOREST'S TRAINING, INC.

4141 WEST BELMONT AVENUE CHICAGO 41, ILLINOIS

QUESTIONS

3

How many advance Lessons have you now on hand?..............................

Print or use Rubber Stamp.

Name.. Student No.....................................

Street...Zone........................ Grade...................................

City...State.................................. Instructor...........................

Write your answers on the "Ans." line below each question. If more space is needed use reverse side of this page.

1. Over what approximate range of frequencies must the video amplifier provide uniform response?

Ans...

2. What are the two general classifications of the capacitances of a tube in a circuit?

Ans...

3. Within the desired bandpass of an amplifier, what is meant by frequency distortion?

Ans...

4. In a conventional circuit like that of Figure 5A, what are four causes of attentuation (reduced amplifier output) at low frequencies?

Ans...

5. In the circuit of Figure 5, what capacitances cause the greatest high frequency attenuation?

Ans...

6. Why must video stage amplification be sacrificed?

Ans...

7. Peaking coils compensate for the attenuation of the low or of the high frequencies?

Ans...

8. What is the basic function of a cathode coupled electron tube circuit arrangement?

Ans...

9. What is the disadvantage of locating the contrast control in the grid or plate circuit of a video amplifier stage?

Ans...

10. What is meant by phase distortion?

Ans...

FROM OUR *Director's* NOTEBOOK

WISHING

So much has already been written and printed about "Wish-bones and Back-bones" that it would seem futile for me or anyone else to try to add anything of value. Still I believe a short page from my own history may offer a lesson.

As a very small boy, living in a very small community, I wished most ardently for a Pony. I never Asked for a Pony and I never tried to do anything about getting one by my own efforts. I never went beyond WISHING.

In my wishing, I came to regard myself with great PITY for my not having a Pony. I spent a whole summer's vacation sadly moping about—and Wishing. I missed a Lot of fun.

TODAY, I'm not so sure that I really WANTED that Pony, after all. None of my play-mates had one. It wasn't ENVY.

It was no more than IDLE WISHING. For, if I'd really been keen about it, I'd have Said and DONE something about it.

When I wanted a BIKE—I GOT it. I got it in the way we can get most anything we want badly enough—I WORKED for—and EARNED it.

Yours for success,

W. C. DeVry

DIRECTOR

PRINTED IN U.S.A.

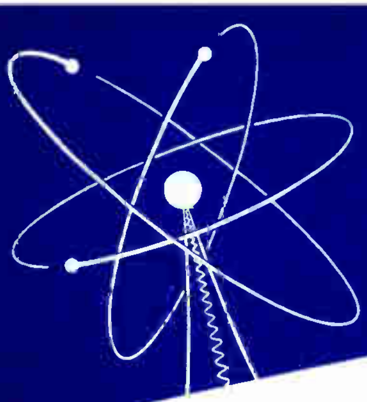

AUTOMATIC BRIGHTNESS CONTROL

Lesson TPC-15A

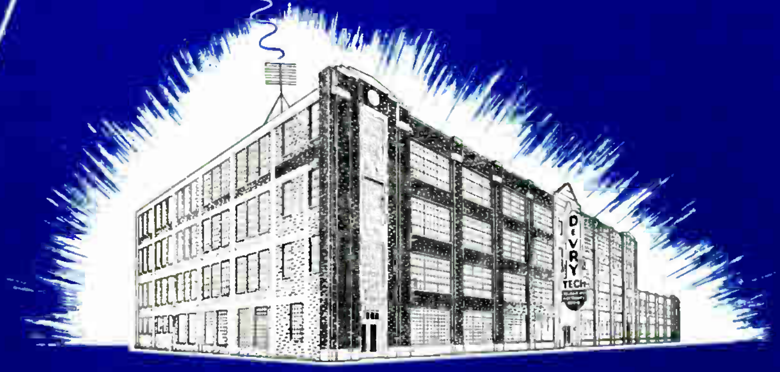

DeVRY Technical Institute
4141 W. Belmont Ave., Chicago 41, Illinois
Formerly DeFOREST'S TRAINING, INC.

5

TPC-15A

AUTOMATIC BRIGHTNESS CONTROL

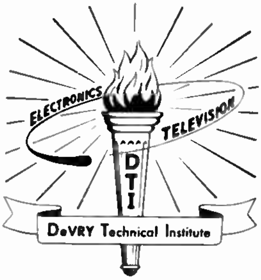

4141 Belmont Ave.

Chicago 41, Illinois

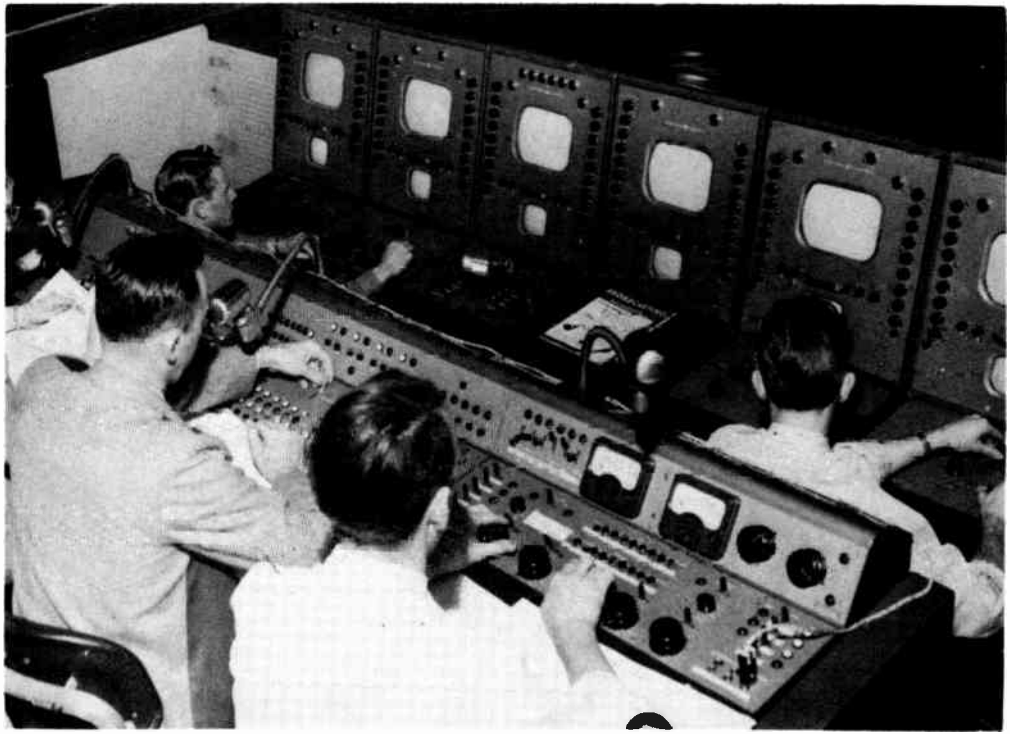

Since the brightness level is lost when the signal from the camera tube passes through a coupling network, the engineer in the foreground reinserts a d-c voltage just before the signal modulates the transmitter. He determines the proper level by comparing the monitor picture to the studio scene.

Courtesy General Electric Co.

Television

AUTOMATIC BRIGHTNESS CONTROL

Contents

> **A desire for knowledge is a natural feeling of mankind, and every human being whose mind is not debauched, will be willing to give all that he has to get knowledge.**
>
> **—Samuel Johnson**

AUTOMATIC BRIGHTNESS CONTROL

Except for the added components employed to extend the pass band, the video amplifier of a television receiver is similar to the voltage amplifier stages employed in the audio section of a radio. Both video and audio signals consist of complex mixtures of a-c voltages and, neglecting their respective frequency ranges, are much the same. However, the video signals also must include information concerning the average or background illumination of the transmitted scene so that the various elements or details are reproduced on the receiver screen with the original respective degrees of brightness or shading.

SCREEN BRIGHTNESS LEVELS

On the receiver screen, the brightness of the scanning line pattern, or raster, is determined by the bias of the picture tube control grid. The more negative the grid with respect to the cathode, the fewer the electrons which reach the screen, and the lower the brightness level. If the grid bias is decreased, more electrons reach the screen and a higher level of brightness is obtained.

Called a **brightness** or **brilliance control,** a potentiometer is included in the picture tube cathode or control grid circuit to provide a means of adjusting the grid bias, and thus determine the operating point of the tube. The signal voltage is applied to the grid and causes its instantaneous potential to vary about the operating point.

Although these signal variations produce picture elements which are respectively darker and brighter than the average level of screen brightness, they do not give any information regarding the average brightness of the scene scanned at the studio. Therefore, if this potentiometer were the only brightness control in the receiver, the viewer could adjust it for some desired level of average brightness, but he would not know whether a generally dark or bright scene was being viewed by the TV camera.

REFERENCE LEVEL

To provide a basis for the proper adjustment of the brightness controls of the receivers tuned to any particular station, the transmitted signal contains a brightness reference level. This reference could be the zero signal level which produces maximum white on the screen, or a level corresponding to some definite shade of gray, between maximum white and black.

Since the various degrees of screen brilliance vary with different picture tubes and receiver circuits, the only practical reference is the signal level which causes zero brightness or a "black" screen. Known as the **black level,** this is the reference used in modern television systems.

For uniform reception, all transmitters must employ the same system, therefore one FCC ruling states: "The black level shall be represented by a definite carrier level which is independent of light and shade in the picture," and "The black level shall be at 75 percent (±2.5 percent) of the peak carrier amplitude."

NATURE OF THE TELEVISION SIGNAL

For any particular picture tube, the cutoff grid voltage is always the same. Therefore, the grid bias must be controlled in such a way that the blanking pulses are able to reduce the scanning spot intensity to zero, regardless of the average brightness of the picture being received.

To provide this condition, the blanking pulses are transmitted at the black level, that is, they are equal to 75 percent of the peak carrier amplitude, and the viewer may use them as a reference. To cause the picture details to have their correct respective brightness levels, with respect to black, it is simply necessary to adjust the receiver brightness control until the blanking pulses just reduce the screen brightness to zero.

As explained, the black level is transmitted at a fixed signal amplitude, while the modulation corresponding to the details of the scene causes the signal level to vary from instant to instant in accordance with the relative intensities of the picture elements scanned by the camera. For proper reproduction of a television scene, not only the picture details, but also the background must have the proper brightness with respect to black. The background brightness level may be thought of as a zero axis with the instantaneous intensities of the picture details varying above and below.

This zero axis, or background brightness level, may remain constant for a comparatively long period of time, or it may change slowly, or more rapidly. However, even the relatively rapid changes are quite slow compared to the video frequencies corresponding to the details of the scene. Whether constant or changing, the background brightness seldom decreases to zero or black level.

Hence, there is a d-c difference of potential between the zero axis and the black level of the picture signal. If the background of the reproduced image is to have the proper level with respect to black, the transmitted signal must retain this d-c component. Furthermore, the receiver must operate in such a way that the d-c component

Due to the effective operation of the automatic brightness control, modern receivers require only an occasional adjustment of the manual control. Therefore, it is concealed behind a panel or mounted in back.
Courtesy Stewart Warner Corp.

controls the grid bias of the picture tube. For this reason, the television receiver contains an **automatic brightness control** circuit which, together with the brightness control potentiometer, determines the actual negative bias on the picture tube grid. The automatic brightness control circuit must be responsive to changes in the d-c component so that any variations of the background illumination are reproduced.

D-C INSERTION AT THE TRANSMITTER

In the process of building the complete video signal at the transmitter, the picture signal a-c axis may be adjusted to its proper value with respect to the black level by the addition of a d-c voltage, the magnitude of which is determined by the average brightness of the scene. This d-c voltage usually is inserted in the grid circuit of one of the tubes in the transmitter mixing circuit, and its amplitude adjusted by an engineer seated in the control booth where he can observe the scene being televised.

For example, when a generally dark scene is being scanned in the studio, a low d-c voltage is inserted so that the signal a-c axis is not far below the level of the blanking pulses, as indicated by E_{d-c} in Figure 1E. When a bright scene is being scanned, a higher voltage is inserted, and the a-c axis falls well below the black level, as indicated by E_{d-c} in Figure 1F.

Modulated by the video signals of Figures 1E and 1F, the television r-f carrier can be represented by the curves of Figures 1A and 1B, respectively. Note that, regardless of the nature of the transmitted scene, the carrier increases to 75% of its peak amplitude for the blanking pulses and to 100% for the sync pulses. However, the average amplitude, above or below zero axis, is greater in the case of the dark picture of Figure 1E than it is for the bright scene of Figure 1F.

D-C REINSERTION IN THE RECEIVER

In the mixer stage of the receiver, modulated carriers like those of Figures 1A and 1B are heterodyned with the output of a local oscillator and the modulation is transferred to a lower or intermediate frequency. The action is the same as that of a superheterodyne radio receiver and the modulated i-f is increased in magnitude as it passes through the i-f amplifier. Except for its lower frequency and greater amplitude, the output of the i-f amplifier is a replica of the incoming signal with an envelope like those of Figures 1A or 1B.

Acting as the video detector, a diode with the envelope of Figure 1A impressed across it has an output of the form shown in Figure 1C. Or, with an input envelope like Figure 1B, the output is like Figure 1D. However, in practice, the detector load resistor is shunted by the capacitances of the tube and circuit which filters the intermediate frequency so that the actual usable output has a form which more closely resembles those shown in Figures 1E and 1F. Thus, the detector demodulates the i-f and its output wave-form is a replica of the original video signals produced at the transmitter.

The video amplifier increases the magnitude of the detector output voltage, without causing any change of frequencies therefore, the curves of Figures 1E and 1F can represent the video signal voltage impressed across the control grid circuit of the picture tube.

A conventional type of resistance-capacitance coupling is shown in the circuit of Figure 2A where "e_{v-f}" represents the applied signal voltage, e_g represents the portion of e_{v-f} which appears across R_1, C_1 is the coupling capacitor and R_1 is the grid resistor. The cathode is grounded through a portion of potentiometer P_1 which is part of a voltage divider between the "+" of the plate supply voltage and ground.

The grid bias is controlled by the position of the sliding contact of P_1 and the portion in series with the cathode is bypassed by capacitor C_2. By regulating the bias supply voltage E_{cc}, potentiometer P_1 serves as the manually operated "brilliance" or "brightness" control.

In television, the polarity of the signal voltage is important because the blanking pulses must drive the picture tube grid negative in order to produce a "black" screen. These pulses are indicated as positive in the curves of Figures 1E and 1F but must be inverted and impressed on the grid with negative polarity as indicated in the simplified curves of Figure 2B.

In the normal action of an amplifier stage, the input grid voltage is 180° out of phase with the output plate voltage. Therefore, with a detector output as shown in Figure 1, an odd number of video amplifier stages will provide the inverted output voltage of Figure 2B.

With a signal voltage like that of Figure 1E inverted and applied across the e_{v-f} terminals of Figure 2A, the coupling capacitor C_1 blocks the d-c component and only the variations or a-c component appear across grid resistor R_1. This a-c component e_g is indicated by the dark picture curve of Figure 2B and the average level is indicated by the reference line or axis located so that the wave forms equal areas above and below it. To emphasize the action in the curves of Figure 2B, the sync and blanking pulses have been enlarged and the actual picture signals reduced.

With a signal like that of Figure 1F inverted and applied across the e_{v-f} terminals of Figure 2A, the resulting voltage e_g is indicated by the bright picture curve of Figure 2B. Although both curves of Figure 2B are drawn on the same average level or base line, the pulses of the dark picture are less negative than those of the bright picture, while the other parts of the bright picture are more positive than those of the dark picture. Thus, the d-c blocking action of the coupling capacitor has changed the fixed reference for the signal from the transmitted black level to the average signal level.

To transfer these changes of grid voltage to corresponding variations of screen brightness, the E_cI_b characteristic curve of the picture tube of Figure 2 is shown in Figure 3.

The e_g voltages of Figure 2B are added to the d-c bias E_{cc} and, for this explanation, assume that control P_1 has been set so that the negative blanking pulses of the bright picture drive the grid negative to cutoff or the black level.

To illustrate this action, the d-c voltage applied to the grid is indicated by the broken vertical line in Figure 3. The a-c grid voltage is shown by superimposing the e_g curves of Figure 2B on this line. Then, assuming this voltage moves upward to the characteristic curve, the resulting instantaneous changes of screen brightness are plotted to the right. These brightness curves indicate the reproduction of the bright picture would be satisfactory as the image details are between gray and white while the blanking pulses drive the grid negative to cutoff and cause a black screen.

D-C RESTORERS

However, for the dark picture, the image details are too bright and the blanking pulses are not sufficiently negative to cause a black screen. By increasing the negative bias until the dark picture pulses drive the grid to cutoff, correct reproduction could be obtained, but then the bright pictures would be too dark. Thus, to reproduce pictures with proper average brightness and blanking pulses sufficiently negative to reach the black level, it would be neces-

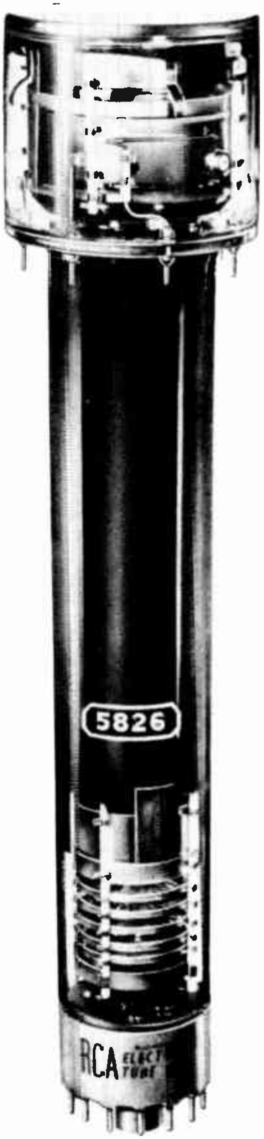

Like other camera tubes, the image orthicon produces a d-c voltage which corresponds to the scene brightness. However, it is lost during transmission and must be reinserted at the receiver picture tube.

Courtesy Radio Corporation of America

sary to adjust the bias voltage for each change of scene.

While this is possible, it is not practical as almost constant adjustment would be necessary. Therefore, circuits have been developed to make the required changes automatically. Since in effect, the automatic change of bias restores the d-c component of the original signal, the circuit is known as a **d-c restorer.**

Like other electronic developments, there are a number of types of d-c restorers. The more common types are described and explained in the remainder of this lesson.

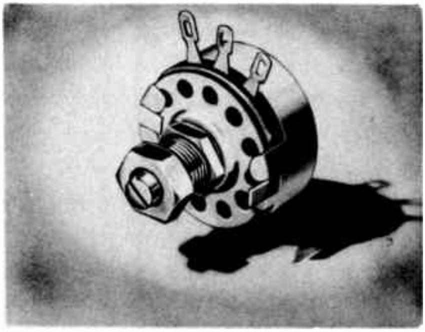

Many television receivers employ screwdriver adjustment on the manual brightness control. Usually the potentiometer with a slotted shaft is mounted in back.

Courtesy Ohmite Mfg. Co.

Diode D-C Restorer

One d-c restorer employs the coupling circuit of Figure 2A with the addition of a diode as shown in Figure 4A. For simplicity, all frequency compensating and decoupling units are omitted and only the basic coupling units between the video amplifier tube V_1 and picture tube V_3 are indicated. The diode tube V_2 is connected directly across, in parallel with, grid resistor R_1.

The parallel combination of R_1 and V_2 is in series with coupling capacitor C_1 between the plate of V_1 and ground and also in series with the d-c bias voltage E_c in the V_3 grid-cathode circuit. The coupling capacitor C_1 blocks the d-c plate voltage of tube V_1 but as the incoming signals cause variations of plate voltage, the resulting charge and discharge currents of C_1 are carried by the R_1V_2 combination.

When the receiver power is turned on, the plate voltage of tube V_1 is impressed across capacitor C_1 which charges through grid resistor R_1. During the interval of this action, electrons flow from ground through resistor R_1 to one capacitor plate which becomes negative, thereby forcing electrons from the other plate, through V_1 plate load resistor R_L to B+ and through the plate supply to ground. This flow of electrons through R_1 causes a voltage drop which is positive toward the grid as indicated.

With capacitor C_1 charged and no change of tube V_1 control grid voltage, there is no electron flow through, or voltage drop across, R_1, therefore the negative plate of C_1, the grid end of R_1, the cathode of diode V_2 and the control grid of picture tube V_3 are at ground potential. However, the cathode of tube V_3 is maintained at a positive potential, in respect to ground, by the voltage drop across the included portion of potentiometer P_1. With the cathode as the reference point, the control grid of V_3 is E_C volts negative.

With signal voltages like those of Figures 1E and 1F impressed on the control grid of tube V_1, Figure 4, the plate voltage varies according to the curves of Figure 2B and these changes are impressed on coupling capacitor C_1. However, in the circuit of Figure 4A, the plate is never negative with respect to ground. Therefore, the curves of Figure 2B represent the variations of positive voltage. By considering the horizontal line as the normal or "no-signal" plate voltage the "+" parts of the curve represent increases while the "—" parts represent decreases of plate voltage.

Connected between the plate of V_1 and ground, capacitor C_1 charges as the plate voltage increases and discharges as the voltage decreases. During the capacitor charge, the electron flow follows the path explained previously and the resulting voltage drop across R_1 has the indicated polarity. While the capacitor discharges, the electron flow is from the negative plate through R_1 to ground and through the tube V_1 from cathode to plate to positive capacitor plate. During intervals of capacitor discharge, the polarity of the voltage drop across R_1 is reversed so that its grounded end is positive. Thus, variations in the positive voltage on the plate of tube V_1 cause an a-c voltage drop across resistor R_1.

Diode V_2 is connected with its plate to ground in parallel with resistor R_1, therefore any voltage across the resistor is impressed across V_2 also. While capacitor C_1 is charging, the polarity of the drop across R_1 drives the cathode of V_2 positive with respect to the plate, therefore the tube is nonconductive. However, with capacitor C_1 discharging, the polarity across R_1 reverses, the cathode of V_2 is negative with respect to the plate, and the tube becomes conductive. Because of this action, C_1 charges through the comparatively high resistance of R_1 and discharges through the low resistance of R_1 and conductive V_2 in parallel.

C_1 and R_1 are so chosen that the RC time constant of the charging circuit is equal to the interval of about 10 horizontal lines, therefore, for each individual line of the image, the charging current is fairly constant. Carried by resistor R_1, the charging current causes a voltage drop which is impressed on the grid-cathode circuit of the picture tube.

Still referring to the circuit of Figure 4A, there are two sources of voltage. First, the drop E_C across the included portion of potentiometer P_1. Due to the action of bypass capacitor C_2, this voltage is considered as d-c and its polarity maintains the grid negative with respect to the cathode. Second, the drop across resistor R_1, which is proportional to the charging current of capacitor C_1, with a polarity that tends to drive the grid positive with respect to the cathode. Thus. the total grid bias is equal to the difference of these two voltages.

While capacitor C_1 discharges, tube V_2 becomes conductive and the resulting low resistance of the parallel combination reduces the drop across R_1 to a negligible voltage. Under these conditions E_C is the only effective voltage in the grid-cathode circuit and the potentiometer P_1 is adjusted so that with no signal input, the picture tube grid is biased to beam cutoff or the black level of screen brightness. Also, with the receiver in operating condition, with no signal input, coupling capacitor C_1 is charged to the average plate voltage of tube V_1 and there is no voltage drop across R_1.

To illustrate the action with signal voltages like those of Figure 2B, the plan of Figure 3 has been used for Figure 4B. Again, the signal voltages on the grid are shown at the lower left and assumed to be moving up toward the characteristic curve, but the bias voltage E_C is adjusted to slightly beyond cutoff. As the first negative blanking pulse causes a sudden drop in the plate voltage of V_1, capacitor C_1 discharges rapidly to the lower value. As diode V_2 is conductive during this action, the discharge has no appreciable effect on the grid voltage of V_3.

At the expiration of the blanking pulse, the plate voltage of V_1 rises suddenly to its former average and capacitor C_1 starts to charge immediately. As diode V_2 is nonconductive during this action, the charging current is carried by resistor R_1 and the resulting voltage drop across it drives the grid of V_3 more positive or less negative. The drop across R_1 is proportional to the difference between the average plate voltage of V_1 and the lower value caused by the blanking pulse. The magnitude of this difference is shown by arrow E_{R_1} in the bright picture curves of Figure 4B.

The plate voltage variations that correspond to the transmitted picture are mainly positive with respect to the average plate voltage and cause instantaneous variations in the average charging current. As indicated at the right of Figure 4B, these signals cause corresponding variations of screen brightness.

As the picture portions are the most positive part, the video signal has "positive picture phase" when applied to the grid of the picture tube. For this signal, the average brightness is indicated by the upper horizontal broken line.

For a dark picture the general action is exactly the same but the difference between the average signal level and the negative blanking pulses is much less than for the bright picture. Therefore, the blanking pulses cause a smaller reduction of V_1 plate voltage and reduce the capacitor discharge. After the expiration of the blanking pulse the plate voltage rises to its average value and the capacitor starts to charge. However, as this voltage increase is comparatively small, the charging current is correspondingly low and the resulting drop across R_1 is indicated by arrow E_{R_1} at the lower left of Figure 4B. As a result, the average brightness of the scene is reduced to its proper value.

This arrangement automatically varies the picture tube screen brightness to correspond to the difference between the dark level and average level of the transmitted signal. Thus, in effect, it restores the d-c component indicated as E_{d-c} in Figures 1E and 1F.

In the upper right section of Figure 3, the screen brightness varies above and below the average level of the signals and the blanking pulses of the dark picture do not reach the black level. In the upper right section of Figure 4B, all blanking pulses extend to the black level which is the reference and the average level is at the proper distance above the reference.

To simplify the explanations of Figure 4, it was assumed that each blanking pulse caused diode V_2 to become conductive. In actual operation, a state of equilibrium is reached after which only the extremely negative sync pulses overcome the voltage across E_{R_1} and cause conduction of V_2. The diode current during these pulses is indicated by curve I_d of Figure 4B. Due to these short current pulses, the voltage across R_1 varies with scenes of different average brightness to provide the action as explained.

To prevent any interaction with the normal signal coupling circuits, in practice, the diode d-c restorer may be isolated, as shown in Figure 5. Here, the signal coupling capacitor C_3 is connected from the junction between peaking coils L_1 and L_2 in the plate circuit of the video amplifier output tube V_1 to the control grid of picture tube V_3.

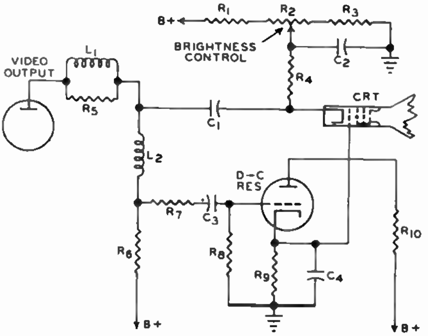

A triode d-c restorer. It is used in the circuit where the video signal is applied to the CRT cathode to reinsert the brightness level.

Compared with the circuit of Figure 4A, R_2 and L_2 replace R_L; R_5, R_6, and R_7 replace R_1, and C_5 replaces C_2. So far as the video signals are concerned, the coupling action is the same in both circuits. The d-c restoration is obtained by means of resistor R_4, capacitor C_4, and diode V_2 connected across resistor R_6. The action of these components is as explained for C_1, R_1, and V_2 of Figure 4A.

Even mobile equipment must monually control the brightness level before reloying the signol to the studio.

Courtesy Rodio Corporotion of Americo

Resistor R_4 limits the current in the circuit of C_4 when diode V_2 is conductive. As the restorer circuit is connected to the junction between L_2 and R_2, its capacitances are isolated from the plate-cathode circuit of the video output tube V_1. In much the same way, resistor R_5 provides a conductive path for the grid of picture tube V_3 but isolates the capacitance of the diode.

Grid-Leak D-C Restorer

A second type of d-c restorer circuit is shown in Figure 6A. The output of video amplifier V_1 is direct coupled to the grid of picture tube V_2. C_1 and R_1 provide grid leak bias for V_1 while R_L serves as the plate load resistor for V_1 and as the grid resistor for V_2. Potentiometer P_1 is the manual brightness control.

Reviewing briefly, the grid leak bias is produced as a result of cathode-to-grid electron flow in V_1. The positive peaks of input signal e_I drive the amplifier grid positive with respect to the grounded cathode and, captured by the grid, electrons travel to C_1 which thus becomes charged to the peak value of e_I and to the polarity indicated. During the interval between positive signal peaks, C_1 discharges slightly through R_1, the electrons leaving the negative plate of the capacitor and flowing down through R_1 to ground so that the voltage drop E_{R1} has the polarity indicated.

The capacitance of C_1 and the resistance of R_1 are relatively large, therefore C_1 is not permitted to discharge to a very great extent between positive signal peaks, but is recharged fully by each peak. Because of this, the discharge current of C_1 maintains the grid bias, E_{R1}, at a value only slightly less than the peak applied signal voltage, and only the positive sync pulses are able to overcome this bias and cause cathode-to-grid conduction of V_1.

The bias E_{R1} is directly proportional to the peak amplitude of the applied signal, and therefore, it is greater for a bright-picture signal having high amplitude blanking pulses than for a dark-picture signal having low amplitude blanking pulses. In other words, tube V_1 operates with a variable grid bias which is determined by the amplitude of the blanking pulses of the video signal.

The V_1 E_cI_b characteristic is represented by the curve of Figure 6B. The wave-forms in the lower left show that a bright-picture signal develops a large bias, E_{R1}, causing the tube to operate at a low point on the curve. In contrast, dark-picture signal develops a small bias, E'_{R1}, causing the tube to operate at a high point on the curve.

In the upper right of the Figure, the horizontal dashed lines represent the average plate current for the respective types of pictures and, as shown, the difference in these values results in the tops of the blanking pulses being lined up again. That is, the d-c component has been restored by the action of the V_1 grid leak bias circuit so that the tops of the blanking pulses may be used as the reference level for picture brightness.

To retain the reinserted d-c component, it is necessary to employ direct coupling between the output of the video amplifier and the picture tube. Therefore, no blocking capacitor is used between the plate of V_1 and the grid of V_2 in Figure 6A.

As explained for Figures 4 and 5, the d-c component of the video signal is employed to automatically vary the bias of the picture tube so that the average brightness level of the screen corresponds to that of the transmitted scene. In the circuit of Figure 6A, the picture tube grid-cathode d-c circuit includes R_L and the portion of potentiometer P_1 between B+ and the slider. Since it is connected through R_L to B+, the picture tube grid would be positive with respect to the cathode by an amount equal to E_C if there were no voltage drop across R_L. However, V_1 plate current develops a voltage drop, E_{RL}, having the polarity indicated, so that the V_2 grid-cathode circuit contains the two series-opposing d-c voltages, E_{RL} and E_{cc}. Determined by the setting of brightness control P_1, E_{cc} has a fixed value, while the average of E_{RL} varies directly with that of the V_1 plate current, as indicated at the extreme right of Figure 6B.

Figure 6C shows the E_cI_b characteristic curve of the picture tube of Figure 6A and, with the cathode potential as a reference, voltage E_{cc} is shown as a positive value. However, the series opposing voltage drop E_{RL} is greater than E_{cc}, so that the net grid bias E_c is negative. For a bright-picture signal, the average value of E_{RL} is low, and the difference between it and E_{cc} is small, causing the tube to operate at a relatively high point on the curve. For a dark-picture signal, the heavier average video amplifier plate current produces the higher voltage drop, E'_{RL}, and the large difference between this and E_{cc} provides a high net negative bias E_C so tube V_2 operates nearer cutoff as indicated.

Figure 6C shows that the screen brightness level is high in the case of the bright-picture signal and low when the dark-picture signal is being received, while all blanking pulses reduce the brightness to the black level. These, of course, are the desired picture tube operating conditions and correspond to those shown in Figure 4B.

In the circuit of Figure 6A, failure of the input signal will result in V_1 operating at zero bias, and thus permit a heavy plate current. A high E_{RL} is produced to bias the V_2 grid to cutoff. In like manner, in the circuit of Figure 4A, failure of the signal results in loss of the d-c voltage, E_{R1}, allowing the negative bias to cut off the picture tube beam. Thus, both of these circuits automatically reduce the spot intensity to the black level. Therefore, the fluorescent coating of the picture tube screen is not damaged by excessive electron bombardment when, for any reason, there is no signal input to the video amplifier.

The grid-leak type d-c restorer is used in the video amplifier circuit of Figure 7. Operated with its cathode at ground potential, video amplifier V_1 has its bias developed across grid resistor R_1. No d-c blocking capacitor is employed in the output coupling circuit, the V_1 plate being connected directly through coil L_1 to the grid of picture tube V_2. The cathode of V_2 obtains its positive voltage from the slider on potentiometer P_1, while the grid is connected through L_2 and R_5 to the +190 volt terminal of the power supply. Thus, the grid potential is equal to 190 volts minus the drop, E_{R5}, produced by the V_1 plate current.

The slider on P_1 is set so that the cathode is more positive than the grid, thus providing the proper operating conditions for the picture tube. The action of this circuit is like that explained for the simplified circuit of Figure 6A. Briefly, in Figure 7, the V_1 grid-leak bias is proportional to the amplitude of the blanking pulses of the applied video signal. Thus, the high amplitude pulses of a bright-picture signal result in low plate current and voltage drop, E_{R5}, permitting V_2 to operate with small negative bias and high average beam current, while the low amplitude pulses of a dark-picture signal result in a high E_{R5} so that V_2 operates with reduced average beam current.

Dual Purpose Triode

In Figure 8 are shown the circuits of the v-f amplifier V_1, d-c restorer and sync pulse separator V_2, and picture tube V_3 as used in one model television receiver. Though the dual purpose tube, V_2, is a triode, its d-c restoring function employs the same principle as in the diode system explained above.

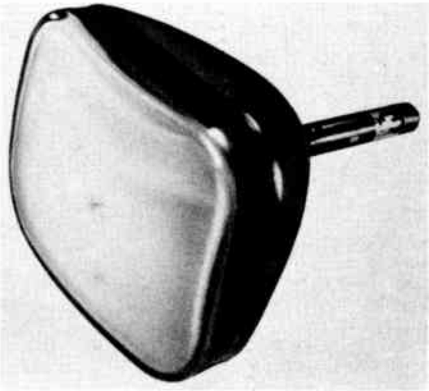

The brightness of the scene on a picture tube is determined by the average grid bias. This bias is supplied by the d-c restorer circuit.

Courtesy Sylvania Electric Co.

During negative peaks of the V_1 output signal, the V_2 cathode is made negative with respect to its grid, and the tube conducts permitting C_3 to discharge to some extent. During the remaining portion of the video signal cycle, C_3 recharges through R_7 producing a voltage drop E_{R7} having the polarity indicated, and V_2 is nonconductive.

The magnitude of E_{R7} varies directly with the amplitude of the blanking pulses, thus providing the desired automatically varying d-c voltage. In the grid-cathode circuit of V_3, this voltage E_{R7} is in series with the fixed cathode bias obtained from potentiometer P_1.

The second function of V_2, sync pulse separation, was covered in detail in an earlier lesson. Briefly, the action is that each time V_2 conducts, electrons flow from the cathode through the tube to the plate and then through R_{11} to B+. Since only the sync pulse portions of the signal are sufficiently negative to cause conduction of V_2, the voltage pulses produced across R_8 have the frequency and wave-form of the sync pulses, and are coupled to the input of the receiver sync circuits as indicated.

DIRECT COUPLING

As mentioned earlier, the d-c component is lost when the signal is passed through the common types of v-f amplifiers because of the d-c blocking capacitors used in the interstage coupling circuits. This loss of the d-c component is prevented, and the need for a d-c restorer eliminated, by the employment of "direct coupled" v-f amplifiers.

Projection tubes employ an added automatic brightness control circuit to protect the screen from immediate damage if the sweep circuits fail. The tube is biased to cutoff until sweep voltages applied to the control tube reduce the bias.

Courtesy North American Philips Co. Inc.

This arrangement is used in the circuit of Figure 9 which includes the video detector, the 1st v-f amplifier, the v-f output stage, and the picture tube grid-cathode circuits of a well known television receiver. Detector V_1 is coupled directly through L_2 to the grid of first v-f amplifier V_2, the plate of which is coupled directly through L_4 and L_5 to the grid of V_3. The plate of the v-f output tube is coupled directly through R_{13} to the grid of picture tube V_4. Thus, with direct coupling from the output of the detector to the grid of the picture tube, the signal d-c component is retained at all times.

When direct-coupled amplifier stages are employed, the grid of each tube obtains its d-c operating voltage from the same source as the plate of the preceding tube and yet, at the same time, the proper d-c voltage relations must be provided for the various elements of each tube. This circuit requires a voltage divider system like that shown along the lower portion of Figure 9. Extending from the —125 v to the +120 v terminals of the power supply, this divider consists of potentiometer P_1 and resistors R_{15}, R_{16}, R_{17}, and R_{18}. Operating at the same d-c potential, the plate of V_1 and grid of V_2 are supplied —125 volts through R_3, R_2, L_3, and L_2.

To permit proper operation of V_1, its cathode circuit is connected to the junction between R_2 and R_3, this junction being held at signal ground potential by C_2. The V_2 cathode is connected through R_4 to the slider on potentiometer P_1, which is connected from the —125 v terminal to the —80 v terminal. Hence, the cathode is less negative, or more positive, than the grid. In a like manner, the V_2 plate is connected through L_4, L_5, R_6, and L_6 to the —50 volt terminal and, therefore, it is less negative (or more positive) than either the cathode or the grid. Connected to the +25 v terminal, the screen grid is operated at higher potential than the plate.

Disregarding the very small drop across coils L_4 and L_5, the V_3 control grid is at the same operating potential as the V_2 plate. With respect to the —50 v power supply terminal, both the V_2 plate and V_3 grid are negative by the amount of the IR drop in R_6. Connected from the —50 v to the —125 v terminals, is the voltage divider R_9, R_8, R_7, and L_7. The V_3 cathode connects to the junction between R_7 and R_8, and the various resistances are proportioned so that the cathode is positive with respect to the grid.

The V_3 screen grid is connected directly to the +120 v terminal, while the voltage divider consisting of R_{12} and L_8, R_{11}, R_{10}, R_{13}, and R_{21} in series is connected between this point and the —125 v terminal. As one end of this divider is positive with respect to ground, while the other end is negative with respect to ground, a point of zero potential must exist somewhere along the divider. In this receiver, R_{13} and R_{21} are each greater than 2 megohms, while the resistance total of the remaining sections of the divider is less than 10,000 ohms. Therefore, the point of zero potential actually lies somewhere along R_{13}. Connected to the junction between R_{10} and R_{13}, the V_3 plate therefore is positive with respect to ground.

The V_4 grid is connected to the junction between R_{13} and R_{21}, which is a few volts negative with respect to ground, while the cathode is connected to the slider on potentiometer P_2 which forms a part of a voltage divider connected from the +120 v to the —50 v power supply terminals. In the coupling circuit between V_3 and V_4, the signal d-c component is coupled through R_{13}, while the a-c components are coupled through C_8, C_9, L_9, and R_{14}.

* * *

IMPORTANT DEFINITIONS

AUTOMATIC BRIGHTNESS CONTROL—A circuit which automatically controls the background illumination of a scene to the proper brightness level with respect to black.

BRIGHTNESS CONTROL—A potentiometer placed in the cathode ray tube grid-cathode circuit to provide manual adjustment of the tube operating point.

BRILLIANCE CONTROL—See Brightness Control.

BLACK LEVEL—The reference used in present television systems signal level which causes zero brightness of the CRT screen. 75% of peak carrier amplitude.

D-C RESTORER—The stage which restores the d-c component, lost due to d-c blocking capacitors between the video detector and the CRT, to the original signal.

STUDENT NOTES

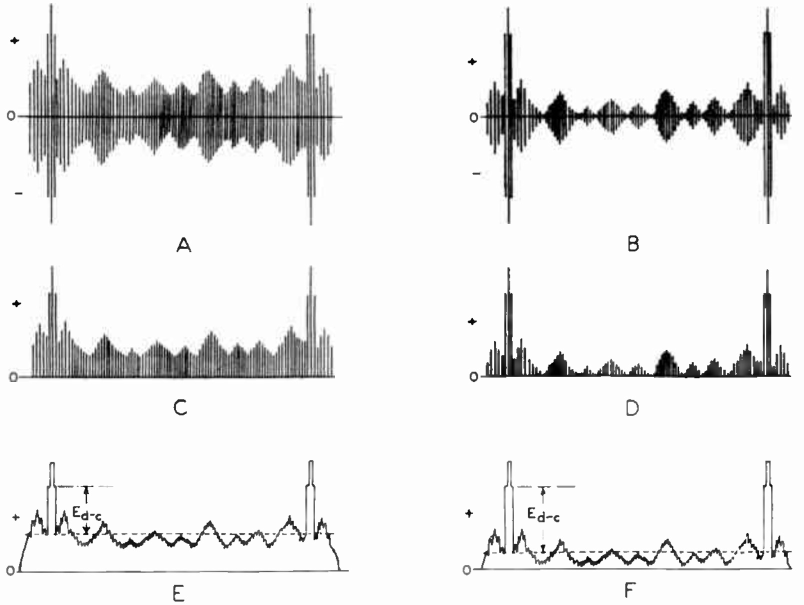

FIGURE 1

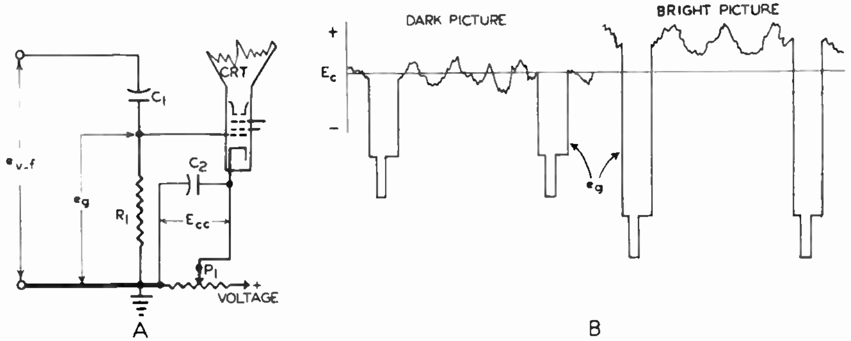

FIGURE 2

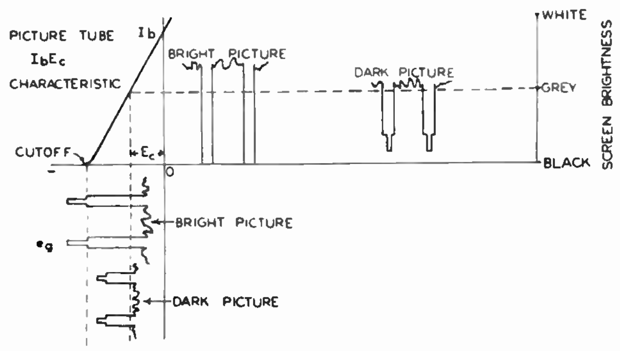

FIGURE 3

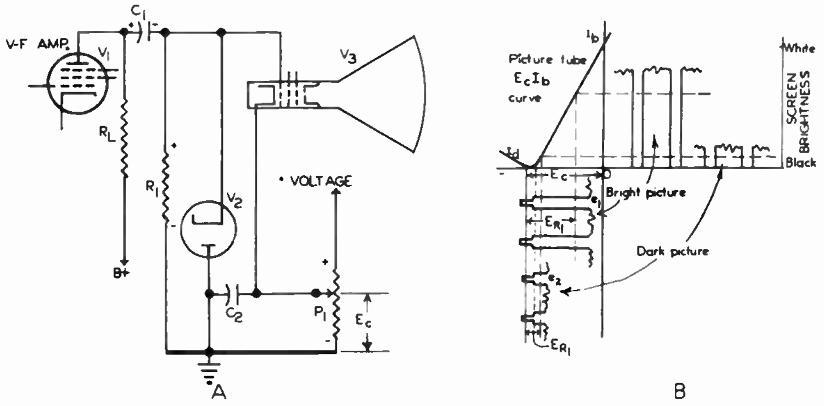

FIGURE 4

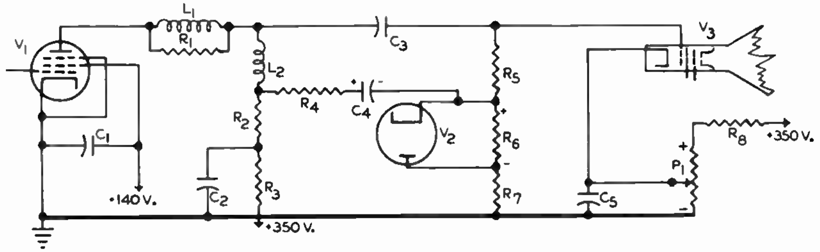

FIGURE 5

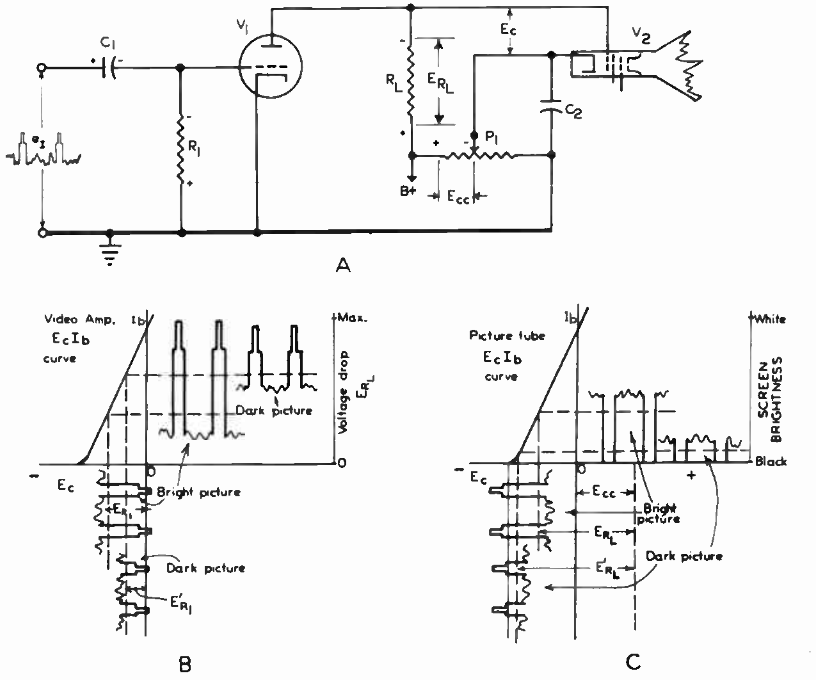

FIGURE 6

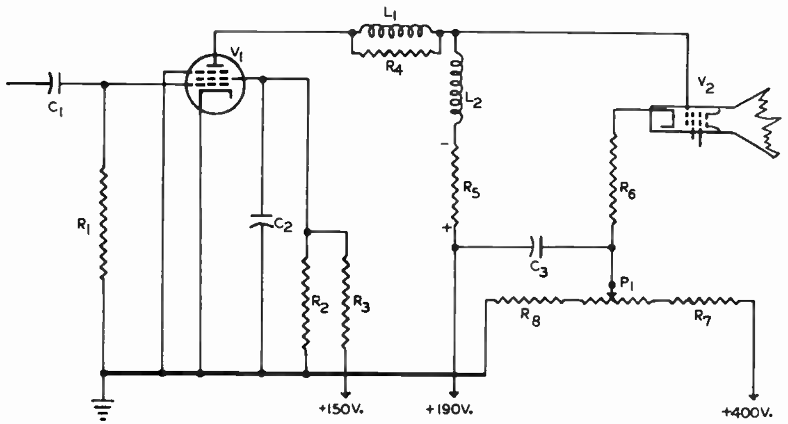

FIGURE 7

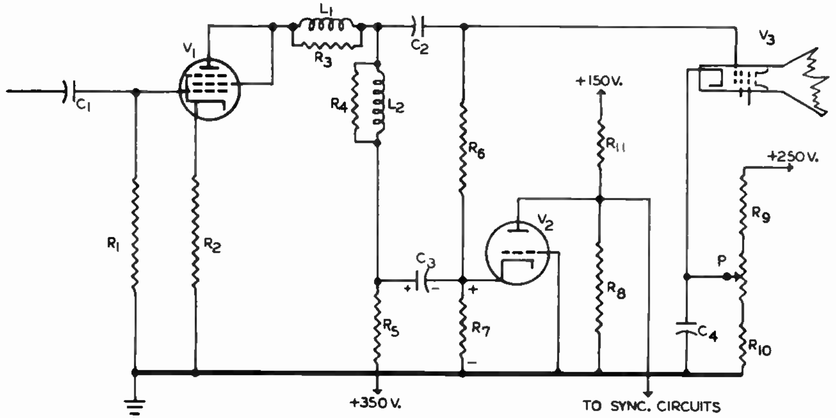

FIGURE 8

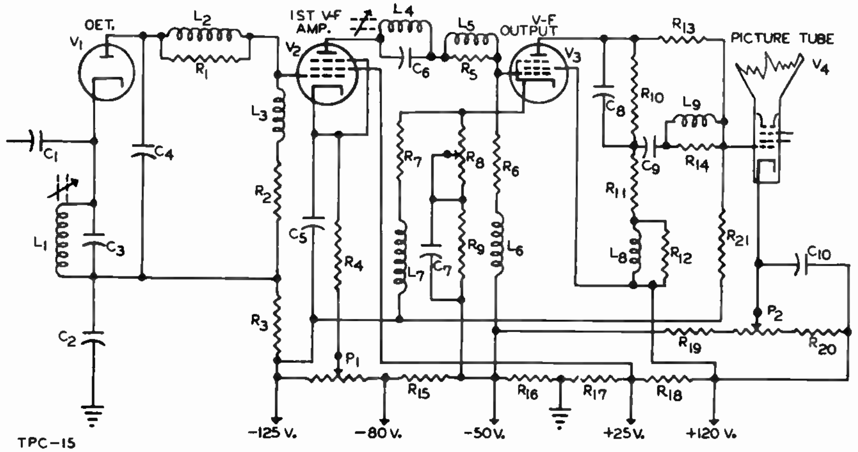

FIGURE 9

DeVRY Technical Institute

Formerly DeFOREST'S TRAINING, INC.

4141 WEST BELMONT AVENUE CHICAGO 41, ILLINOIS

QUESTIONS

3

How many advance Lessons have you now on hand? ....

Print or use Rubber Stamp.

Name .... Student No. ....

Street .... Zone .... Grade ....

City .... State .... Instructor ....

Write your answers on the "Ans." line below each question. If more space is needed use reverse side of this page.

1. **What determines the brightness of the scanning line on a picture tube screen?**

Ans. ....

2. **In present day television systems, what portion of the signal provides a uniform reference?**

Ans. ....

3. **Why must the transmitted television signal contain a d-c component?**

Ans. ....

4. **In the partial circuits of Figures 2A, 4A, 5, 6A, 7, and 8, what is the purpose of potentiometer P_1?**

Ans. ....

5. **If a detector provides an output with signal polarity like that shown in Figures 1E and 1F, is an odd or even number of video amplifier stages required for proper operation of the picture tube?**

Ans. ....

6. **In common video amplifier circuits, what circuit component causes the loss of the d-c component of the signal?**

Ans. ....

7. **In the circuit of Figure 4A, to what is the voltage drop across R_1 proportional?**

Ans. ....

8. **What are the two common types of d-c restorer circuits?**

Ans. ....

9. **When applied to the grid of the picture tube, should the video signal (e_{v-f}) have a positive or negative picture phase?**

Ans. ....

10. **In the partial circuit of Figure 6A, why is the output of tube V_1 direct coupled to the input of the picture tube V_2?**

Ans. ....

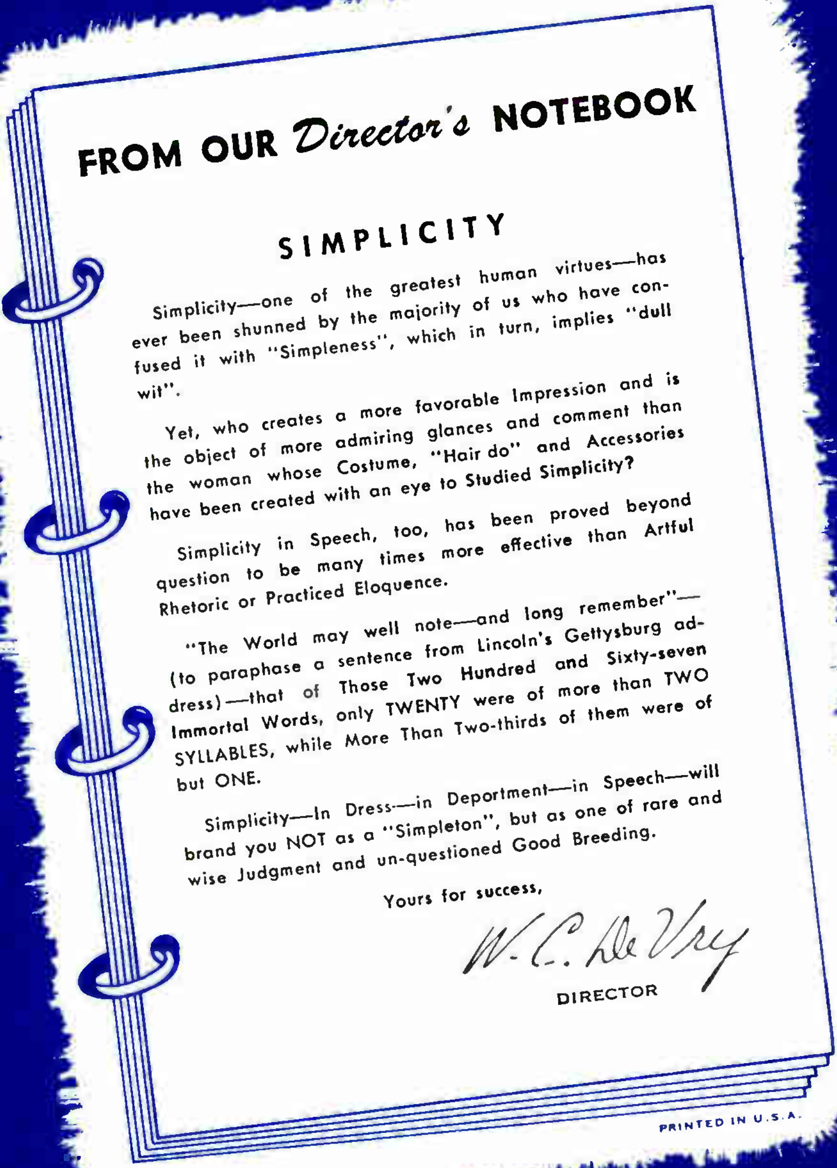

FROM OUR *Director's* NOTEBOOK

SIMPLICITY

Simplicity—one of the greatest human virtues—has ever been shunned by the majority of us who have confused it with "Simpleness", which in turn, implies "dull wit".

Yet, who creates a more favorable Impression and is the object of more admiring glances and comment than the woman whose Costume, "Hair do" and Accessories have been created with an eye to Studied Simplicity?

Simplicity in Speech, too, has been proved beyond question to be many times more effective than Artful Rhetoric or Practiced Eloquence.

"The World may well note—and long remember"—(to paraphase a sentence from Lincoln's Gettysburg address)—that of Those Two Hundred and Sixty-seven Immortal Words, only TWENTY were of more than TWO SYLLABLES, while More Than Two-thirds of them were of but ONE.

Simplicity—In Dress—in Deportment—in Speech—will brand you NOT as a "Simpleton", but as one of rare and wise Judgment and un-questioned Good Breeding.

Yours for success,

W. C. DeVry

DIRECTOR

PRINTED IN U.S.A.

TPC-1

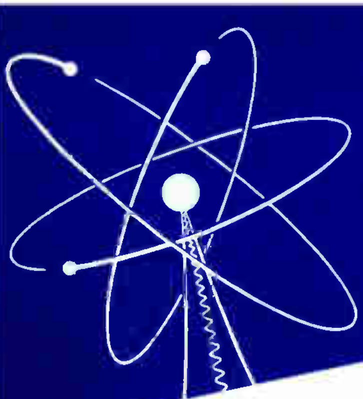

ANTENNAS AND TRANSMISSION LINES

Lesson TPC-16A

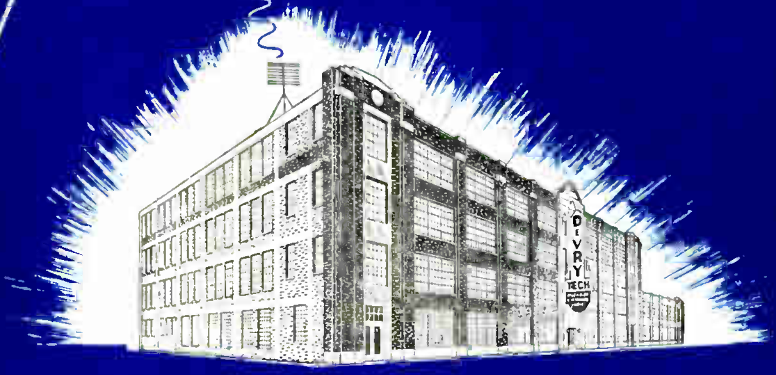

DeVRY Technical Institute
4141 W. Belmont Ave., Chicago 41, Illinois
Formerly DeFOREST'S TRAINING, INC.

16

TPC-16A

ANTENNAS AND TRANSMISSION LINES

4141 Belmont Ave.

DeVRY Technical Institute

Chicago 41, Illinois

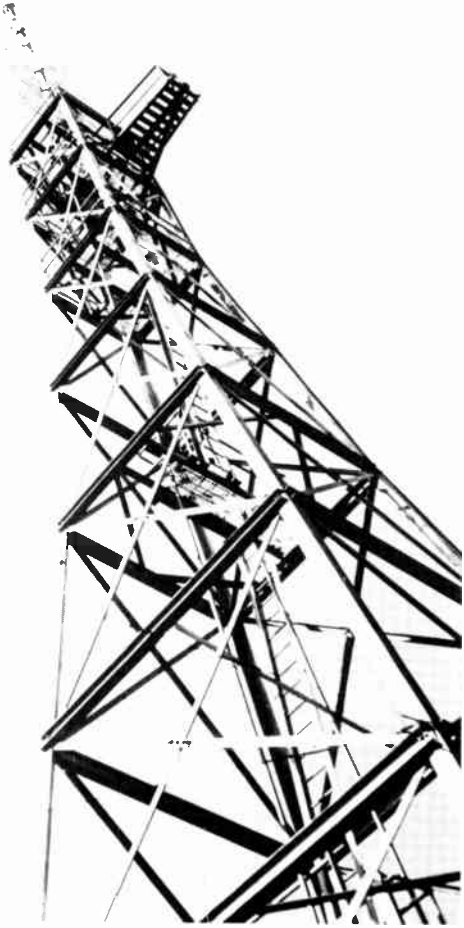

The electromagnetic waves radiated from this "bat-wing" antenna are horizontally polarized. Hence, it is suitable for radiating broadcast television signals.

Courtesy Allen B. DuMont Labs., Inc.

Television

ANTENNAS AND TRANSMISSION LINES

Contents

Twelve Things to Remember—

1. **The value of time.**
2. **The success of perseverance.**
3. **The pleasure of working.**
4. **The dignity of simplicity.**
5. **The worth of character.**
6. **The power of kindness.**
7. **The influence of example.**
8. **The obligation of duty.**
9. **The wisdom of economy.**
10. **The virtue of patience.**
11. **The improvement of talent.**
12. **The joy of originating.**

—Marshall Field

ANTENNAS AND TRANSMISSION LINES

WHY TELEVISION ANTENNAS ARE NEEDED

Due to the nature of television transmission, a good antenna system is much more important for television reception than for the reception of standard AM broadcast radio waves. The wide band of frequencies required for television transmission have made it necessary to use carrier waves which are located in the VERY HIGH FREQUENCY (VHF) and ULTRA HIGH FREQUENCY (UHF) regions of the frequency spectrum. Five channels of the VHF television band extend from 54 to 88 megacycles, while seven channels cover the region from 174 to 216 megacycles. The remaining seventy channels are in the UHF region and extend from 470 to 890 mc.

At these VHF and UHF frequencies, transmission and reception are on a line-of-sight basis, which means that intervening buildings or other objects may obstruct the path of the carrier waves and thus impair reception. Other factors directly affecting reception quality are the strength of the desired signal relative to that of any interfering signals or noise energy at the receiver location, and the fact that multiple images, known as GHOSTS, may be produced if the desired carrier wave is reflected from the sides of buildings or other objects. Because of their high frequencies these television carriers act much like light waves, and such reflection is a common occurrence.

Thus, at any particular receiver location, the signal strength and relative freedom from reflected waves and interference are the principal factors determining the type of antenna system which will provide satisfactory reception. Generally speaking, the electric characteristics or specifications of the receiver make or model are considerably less important.

Although many television receiver manufacturers advertise satisfactory reception with an antenna which is built into the receiver cabinet, the majority favor an external antenna, and preferably one which is installed at a high elevation out-of-doors. Because of the many factors which can interfere with television reception, the built-in type of antenna is restricted to the rather small number of receiver locations in which ideal reception conditions exist.

For example, objects such as metal conduit, water pipes, metal venetian blinds, and metal used in the construction of the building may have a shielding effect or cause reflections, so that it is desirable to locate the antenna at some point other than that most suitable for the receiver. Many times an improvement can be obtained by employing an indoor-type antenna situated at some other point in the room, in another room, or in the attic. However, the height at which the antenna is mounted is an important factor in overcoming these various difficulties. This is especially true for UHF. Therefore, in many cases, an outdoor antenna is the only type which can be installed high enough to clear certain obstructions or be far enough away from local sources of interference to provide a good quality of reception.

TRANSFERRING ENERGY FROM ANTENNA TO RECEIVER

Picked up by the antenna, the radio frequency energy must be transferred to the receiver input. The quality of reception depends upon the efficiency with which this energy is transferred, as well as upon the design of the antenna and the receiver. A very important link in the system is the transmission line which is used to carry the energy from the antenna to the receiver.

Because many of the same fundamental principles are involved in the operation of both antennas and transmission lines, a knowledge of transmission line theory will aid in the understanding of antennas. Therefore, for the first part of this lesson, the various types of transmission lines and the theory of their operation are described.

Transmission Line Theory

At low frequencies, the use of conductors for the transmission of electric energy over short distances is not a difficult problem. However, the higher the frequencies involved, the more complex the transmission problem becomes. In fact, when the frequencies are so high that the transmission distance is an appreciable portion of one wavelength or more, the conventional circuit theory is no longer sufficient to solve the problem.

For example, in a problem involving a line carrying 60 cycle current, we normally divide the voltage by the impedance of the load to obtain the current. This method assumes that the line itself has negligible impedance. At 60 cycles the wavelength is approximately 3100 miles, therefore a line 100 feet long is very short compared to one wavelength.

When the frequency is increased to 60 megacycles, entirely different conditions prevail, and the load current can no longer be computed by the simple relation $I = E/Z$. To compare with the 100 foot line at 60 cycles, at 60 megacycles the corresponding wavelength is approximately 16.4 feet and a transmission line would be but .0012 inch long. At this frequency, transmission lines of even a very few feet are long electrically and their impedance is no longer negligible. That is, in addition to the load, the transmission line inductance, resistance, leakage resistance, and capacitance are important. These factors are not in the form of LUMPED quantities such as are presented by coils, resistors, and capacitors; but are DISTRIBUTED along the line. Every unit of length, no matter how small, adds some resistance, inductance, and capacitance.

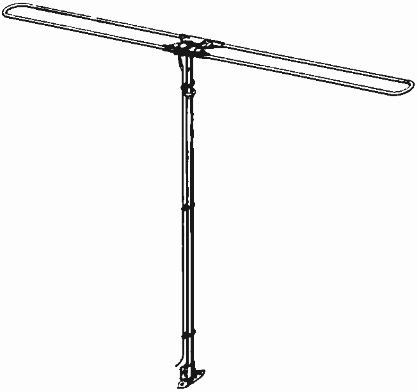

The folded dipole is the basic "driven" element in most television receiving antenna arrays.
Courtesy The Ward Products Corp.

One method of illustrating these line characteristics is shown in Figure 1, where R represents the resistance added by each element of length, and L represents the corresponding added inductance. The leakage resistance is represented by R′ and the capacitance by C. However, even this is not an entirely true representation, since each extremely small element of length adds something to the line. Nevertheless, Figure 1 does show the factors which must be considered in transmission line problems.

It is customary to express the leakage between wires in terms of conductance, such as so many micromicromhos per foot. The capacitance is expressed in micromicrofarads per foot, the inductance in microhenrys per foot, and the resistance in ohms per foot. In practice, the leakage conductance is usually quite small and can be neglected. This is true also of the resistance of the conductor, leaving L and C as the chief factors to consider in addition to the load. In many cases, L and C are actually more important than the load itself.

It is convenient to rate transmission lines in terms of the impedance which they would have if they were of infinite length. Of course, an infinitely long line cannot be obtained in practice, but by making measurements on a line of finite length, data can be obtained which will permit calculation to a very close approximation of the infinite line impedance. This value is known as the CHARACTERISTIC IMPEDANCE OF SURGE IMPEDANCE of the line, and is designated by the symbol Z_o. The magnitude of the characteristic impedance depends upon the size and kind of wire, the inductance and capacitance

tance per unit length, the nature of the medium separating the two wires, and the distance between them. Changes in any of these factors will change the characteristic impedance.

Assuming the wires of the transmission line are separated by air, the characteristic impedance can be expressed mathematically as:

$$Z_o = \sqrt{\frac{L}{C}},$$

when Z_o = characteristic impedance in ohms
L = inductance in henrys per unit length
C = capacitance in farads per unit length.

For other dielectrics, Z_o is reduced by the factor $\sqrt{1/K}$, in which K represents the dielectric constant of the material. The general effect of solid dielectrics is to increase the unit length value of "C." Because no "frequency" term appears in the formula, Z_o is constant for a wide range of frequencies, and therefore, it is like a pure resistance.

Nonresonant Lines

If an a-c voltage is impressed upon the input to a line theoretically extending to infinity, voltage and current waves start along the line and continue indefinitely, remaining in phase all along the line. However, with a line of finite length, which is open or shorted at the receiving end (the end opposite the input or sending end), the waves come to the end of the line and are reflected back to the sending end, an action which is similar to the reflection of water waves after they strike the bank of a pool. The reflected electric waves interfere with the oncoming waves and cause the current and voltage no longer to be in phase with each other as they were in the infinitely long line.

On the other hand, when a line of finite length has a resistance equal to its characteristic impedance connected across its receiving end, all the energy traveling down the line is dissipated in the resistance, there is no reflection, the voltage and current remain in phase, and the line appears to have an infinite length. Terminated in this manner, the line is described as NONRESONANT and operates at maximum transmission efficiency.

The curves of Figure 2 illustrate the instantaneous current and voltage relations along a line terminated by a resistance R equal to its characteristic impedance Z_o. There is, of course, some loss in the line, causing each succeeding peak of current and voltage to have slightly less magnitude than the preceding peak. The waves can be thought of as moving rapidly along the line from the generator E with the drawing showing how the waves would look if they could be stopped at some particular instant.

Resonant Lines

A line which is not terminated by resistance equal to its characteristic impedance, reflects part of the electric energy, and these reflections produce STANDING WAVES of current and voltage. Such a line is said to be RESONANT for the particular frequency under consideration. The characteristics of such a line depends upon its length when compared to one wavelength of the transmitted signal.

In order to see how the characteristics depend upon the line length, consider a generator which produces a signal of frequency f, and a two-wire line which has variable length and is short-circuited at the receiving end, as illustrated in Figure 3. Here, the wavelength is designated by the Greek letter Lambda (λ).

As the shorted line is increased in length from zero to λ/4, to the generator it acts, or "looks" like an inductive reactance of increasing magnitude. This is illustrated by the symbol for a coil between 0 and λ/4 in the lower left in the figure. At exactly one quarter wavelength, the line acts like a very high resistance, or a parallel resonant circuit, as indicated above the line at λ/4. Between one-quarter and one-half wavelength, the line acts like a capacitive reactance of decreasing magnitude until, at exactly λ/2, it acts like a series resonant circuit or a low resistance.

Between λ/2 and 3λ/4 it again acts like an inductance and presents an increasing inductive reactance to the generator. At exactly 3λ/4 it again behaves like a parallel resonant circuit, and from 3λ/4 to λ, presents a decreasing capacitive reactance. At λ it is again equivalent to a series resonant circuit, presenting a very low resistance to the generator.

In Figure 4 the generator is connected to a line which is open at the receiving end and its characteristics differ from those of the shorted line of the same length. As this line is increased from zero to λ/4, it presents a decreasing capacitive reactance to the generator. At exactly λ/4 the generator is presented a very low resistance, and from λ/4 to λ/2 the impedance consists of inductive reactance which increases as the line is lengthened until at exactly λ/2, a very high resistance such as would be presented by a parallel resonant circuit is "seen" by the generator.

A decreasing capacitive reactance is presented from λ/2 to 3λ/4, and the low resistance of a series resonant circuit at exactly 3λ/4. From 3λ/4 to λ, the line presents an increasing inductive reactance, and at λ, the very high resistance equivalent to a parallel resonant circuit is presented to the generator.

As in the case of the line shorted at the receiving end, to the generator the open-end line presents an impedance which varies with the length of the line. Note that, at even multiples of a quarter wavelength, the shorted line acts like a low resistance or a series resonant circuit, while the open line acts like the very high resistance of a parallel resonant circuit.

In the study of transmission lines, often it is convenient to think of a given line in terms of degrees rather than linear length. With this system, a distance representing one wavelength is considered as 360°, a half wavelength 180° and a quarter wavelength 90°. With the length given in degrees and the corresponding values and nature of the impedance given by the curves, the manner in which the impedance varies with the length of a transmission line is shown in Figure 5. Above the horizontal axis the reactance is inductive and is represented by X_L. Below the axis the reactance is capacitive and is represented by X_C.

The curves of Figure 5A are for a short-circuited line, and starting from zero, the reactance is inductive and becomes equal to the characteristic impedance of the line at point P, which represents λ/8, or 45°. As the line length approaches 90° (one-quarter wavelength), the impedance rises rapidly to a very high value. This is shown in Figure 3 also, where at λ/4 the impedance is equivalent to the high resistance presented by a parallel resonant circuit.

Above 90°, the reactance is still high but is now capacitive. It is equal to the characteristic impedance (Z_o) at 135° (3λ/8), and drops to zero at 180° (λ/2). In Figure 3, the impedance is indicated as a Low R at this point, and as mentioned, is equivalent to a series resonant circuit. From earlier explanations it is known that, in a series resonant circuit, the impedance depends upon the resistance of the wire in the circuit. If the wire is large and is a very good conductor, the resistance is negligible. For this reason it is shown as zero at 180° in Figure 5A. Continuing beyond 180°, the line reactance varies the same as for the first 180°, and, at 360°, again drops to zero.

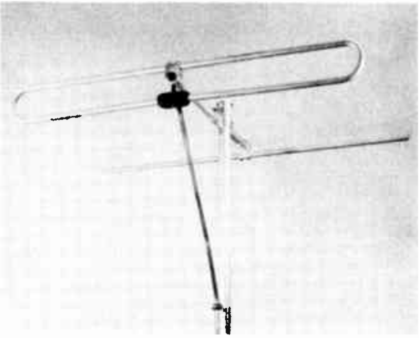

A folded dipole with a reflector. A twin lead transmission line is shown passing from the folded element over to and down the mast.

Courtesy The Radiart Corp.

Interpreted in the same manner, Figure 5B gives corresponding reactances for the open-circuited line of Figure 4. A comparison of Figures 5A and 5B shows the important differences in the impedances of open and shorted lines.

The current and voltage relations in both the shorted or closed-end and the open-end lines are shown in Figure 6. Here, the solid-line curves give the voltages along the lines, and the dashed-line curves the currents. With the receiving end as the reference point, the graph of Figure 6A is marked off in quarter-wave units and, although the line is 5λ/4 in length, the voltage-current relations are the same for any length of line. Over a distance of one wavelength from the closed end of this line, the impedance variations may be determined by applying the graph of Figure 5A so that 0° and 360° correspond to the 0 and λ points, respectively, on the graph of Figure 6A.

Thus, at the shorted receiving end, the impedance is minimum and, therefore, the current is maximum and the voltage is minimum. Progressing from point 0 to point λ/4, the impedance and voltage increase and the current decreases until, at λ/4 (90°, Figure 5A), the impedance and voltage are maximum and the current is minimum. Beyond λ/4, the impedance and voltage decrease and the current increases until, at λ/2 (180°), the current is maximum and the impedance and voltage minimum.

A similar cycle of variations occurs over each succeeding half-wavelength of the line until the generator is reached. Note that points of maximum voltage, E_m, and points of maximum current, I_m, are spaced at alternate quarter-wave intervals from the receiving end, and that points of maximum voltage correspond to points of

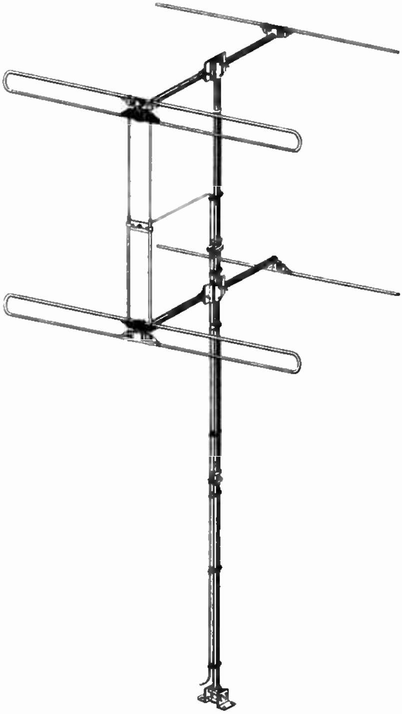

Stacked dipoles with reflectors. Note the manner in which the transmission line connects half way between the two arrays.

Courtesy The Ward Products Corp.

minimum current, and points of maximum current correspond to points of minimum voltage.

In a similar way, the graphs of Figure 5B and Figure 6B show the impedance, voltage, and current variations for the open-end type line. Here, the high impedance of the open receiving end causes the current to be minimum at point 0, Figure 6B, while the voltage is at maximum. Again a complete cycle of variations occurs over each succeeding half-wavelength, and for both the open and shorted types of lines, the voltage maximum and current minimum points correspond to points of high impedance, while the voltage minimum and current maximum points correspond to points of low impedance.

Regardless of line length with respect to signal wavelength, standing waves are always produced if the line is not terminated by a resistance equal to its characteristic, or surge impedance. The maximum voltage and current in Figure 6, are called LOOPS, while the minimum values are called NODES.

If, instead of being shorted or open, the transmission line is terminated by pure inductance or pure capacitance, the loops and nodes are shifted along the line, but retain their respective quarter-wave spacing. The first voltage loop and current node is less than a quarter wavelength from the end of the line if the termination is inductive, while the first current loop and voltage node is less than a quarter wavelength from the end if the termination is capacitive. In each case, the displacement is proportional to the terminating inductance or capacitance.

When the terminating load is purely resistive but not equal to Z_o, some power is consumed by the load, and some is reflected to cause standing waves. Again, the distribution of current and voltage loops and nodes is the same as shown in Figures 6A or 6B. However, the node values are no longer zero but have a value proportional to the power delivered to the load.

For example, in Figure 7 the line is terminated by resistance $R = 3Z_o$, and there is a voltage loop and current node at the receiving end of the line as indicated by the graph. In Figure 8, the load resistance is equal to one-third of Z_o, and the receiving end of the line has a current loop and a voltage node. In both figures, the maximum and minimum levels are indicated by dashed horizontal lines, and as the resistance of R is made closer and closer to Z_o, these horizontal lines approach each other until, as shown in Figure 9, when $R = Z_o$, they form a single line and no standing waves exist.

On the other hand, the greater the difference between R and Z_o, the greater the spacing between the horizontal dashed lines of Figures 7 and 8. That is, the greater the impedance mismatch between the transmission line and the load, the greater the amplitude of the standing waves. When the load contains inductive or capacitive reactance as well as resistance, the nodes are greater than zero as in Figures 7 and 8, but the waves are shifted along the line as explained for pure reactive terminations.

Standing Wave Ratio

Representing the measure of mismatch between the transmission line and its load, the ratio of the voltage or current at the loops to the values at the nodes is known as the STANDING WAVE RATIO, which is abbreviated SWR and stated mathematically by:

$$\text{SWR} = \frac{E_{\text{max}}}{E_{\text{min}}}, \text{ or } \frac{I_{\text{max}}}{I_{\text{min}}}.$$

The ratio of mismatch also may be expressed in terms of the impedances by:

$$\text{SWR} = \frac{Z_o}{R}, \text{ or } \frac{R}{Z_o}.$$

Two forms of this equation are given so that the common practice of stating standing wave ratios in whole numbers always may be employed.

On a transmission line carrying considerable r-f power, such as that connecting a transmitter to the radiating antenna, the voltage loops and nodes are of sufficient magnitude to permit their being measured by moving an r-f indicator along the line, after which the SWR may be computed, using the formulas already given. For example, in Figure 7 the line is terminated with a resistance greater than the characteristic impedance so that the voltage and current vary as shown in the graph. Assuming that 3 volts maximum and 1 volt minimum are measured, the standing wave ratio is:

$$\text{SWR} = \frac{3}{1} = 3.$$

Terminated with a resistance lower than the characteristic resistance, the line of Figure 8 also has standing waves on it. If measuring the voltages results in readings of 3 volts maximum and 1 volt minimum,

$$\text{SWR} = \frac{3}{1} = 3.$$

The load resistance of Figure 9 is the same as the characteristic impedance, and therefore, the meter indicates a constant voltage along the line as shown by the graph. In this case the SWR is 1, the line is said to be "flat," and maximum energy is delivered to the load.

In a receiving transmission line there is not enough r-f energy to make possible the measurement of voltage and current. However, the standing wave ratio may be determined when the load resistance and characteristic impedance are known. In Figure 7, $R = 3Z_0$, hence:

$$SWR = \frac{R}{Z_0} = \frac{3}{1} = 3,$$

which is the same as previously calculated.

In like manner, in Figure 8, $R = Z_0/3$ and:

$$SWR = \frac{Z_0}{R} = \frac{1}{1/3} = 3.$$

The line of Figure 9 is terminated with a load resistance equal to the characteristic impedance, and:

$$SWR = \frac{R}{Z_0} = 1.$$

In Figures 7, 8, and 9 the generators may represent the television receiving antenna, the transmission lines the lead-in from antenna to receiver, and R the receiver input impedance. If R is much greater or less than the line characteristic impedance Z_0, the transmission line and the receiver input are not properly matched; therefore the standing wave ratio will be high and reception unsatisfactory.

The relationship between voltage losses in db and power efficiency in percent to the standing wave ratio are shown by the curve of Figure 10. For example, with a ratio of 2, the voltage loss is .5 db with a 10% loss in power efficiency but, with a ratio of 4, the voltage loss is about 1.8 db with a 35% loss in efficiency. As this chart indicates the rapid increase of the losses makes it very important to keep the standing wave ratio as low as possible.

TYPES OF TRANSMISSION LINES

Although the only type of transmission line mentioned so far in this lesson is the two-wire parallel conductor, there are several types in frequent use. Illustrated in Figure 11, those particularly adapted to the transfer of r-f signals from antenna to the receiver are designated as follows:

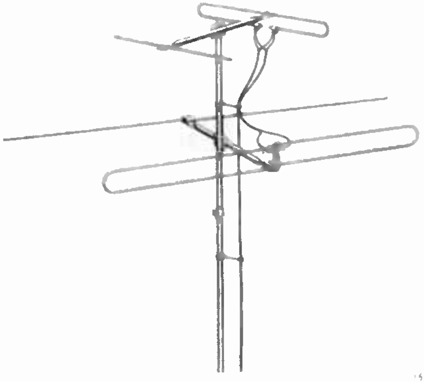

A high band VHF folded dipole and reflector riding "piggy back" on the same mast as the low band VHF array. Each is pointed in the direction which gives optimum reception on its channels.

Courtesy American Phenolic Corp.

(A) Twisted pair
(B) Twin Lead (Two-wire parallel conductor)
(C) Tubular Twin Lead
(D) Concentric or coaxial line
(E) Shielded pair

The chart of Figure 12 lists these five types with several characteristics that are important in the choice of the correct transmission line. The types appear in column 1 while columns 2 and 3 list the obtainable minimum and maximum values of surge impedance.

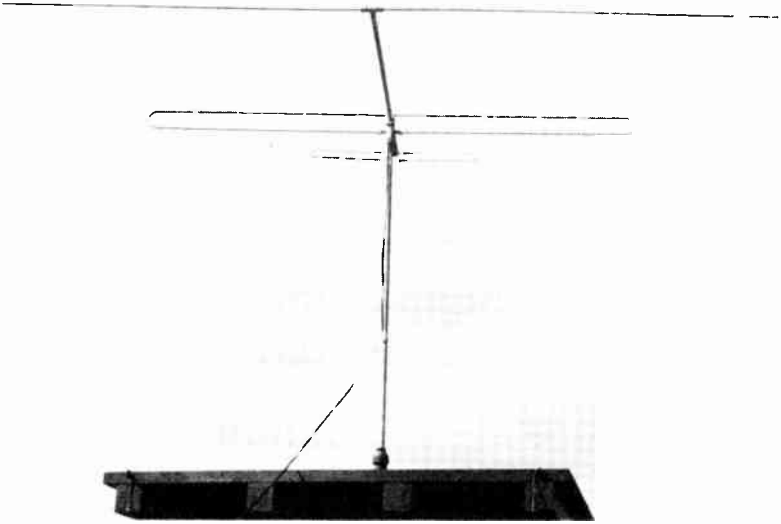

An In-line antenna designed for reception on all VHF channels.
Courtesy American Phenolic Corp.

The attenuation in column 4 is the approximate value at 50 mc and varies with different manufacturers and with the manner in which the line is installed. Column 5 repeats this service for 500 mc. The line efficiency is given in columns 6 and 7 while columns 8 and 9 list the maximum recommended length.

When the capacitance between each conductor and ground is uniform along its entire length, the line is said to be "balanced" to ground and column 10 indicates whether or not the line may be so operated. The last column indicates whether or not the line is shielded by a metal braid that reduces the induction of interfering voltages.

As shown in Figure 11A, the twisted pair consists of two insulated wires, the characteristic impedance of which ranges from 40 to 150 ohms. A feature of this line is its flexibility and comparatively low cost, but it has the disadvantage of a relatively high attenuation loss, as given in Figure 12. Since its losses become appreciably greater at higher frequencies, this type of line is rarely used in television installations.

The lines most commonly employed with television receiving antennas is the two-wire conductors of Figure 11B and 11C. Known as "twin-lead," it has characteristics of low loss and flexibility with impedances ranging from 75 to 300 ohms. For the flat type of Figure 11B, the table of Figure 12 shows an attenuation of .85 db per hundred feet at 50 mc, and a maximum recommended length of 150 feet. The table shows also that this is a balanced, unshielded line; however, to maintain the balanced condition, it must be kept well clear of any conducting objects, such as guy wires, gutters, and down spouts.

The tubular twin lead of Figure 11C is a definite improvement over Figure 11B. As shown in Figure 11F, due to the hollow construction, power losses are reduced by keeping the moisture and dirt which gather on the line surface out of the strong field which exists between the two conductors. This difference is especially important at UHF frequencies. For instance, moisture on ordinary twin lead increases the loss by 23 db per hundred feet at 700 mc while tubular twin lead has an added loss of only 5 db.

Consisting of an insulated center wire enclosed by a concentric metallic outer covering which may be rigid or flexible, the concentric, or coaxial line is shown in Figure 11D. It is not subject to pickup of stray fields and is the most efficient of the four for VHF reception.

The shielded pair of Figure 11E consists of two separate parallel conductors insulated from each other by a low loss dielectric, such as the plastic polyethylene. The actual conductors are contained within a tubing made of copper braid which acts as a shield, and the entire assembly is covered with a rubber or plastic composition to provide weatherproofing.

This type has two outstanding advantages; first, the conductors are shielded against stray pickup and interference, and second, due to the enclosing shield, the line is balanced to ground at all points. Therefore, it can be run close to conducting objects without upsetting the line balance.

ANTENNA REQUIREMENTS

In an earlier lesson it was explained that the FCC has adopted a set of television transmission standards with which all stations must comply. One standard that is particularly related to the receiving antenna states: "It shall be standard in television broadcasting to radiate horizontally polarized waves."

Generally considered to consist of electric and magnetic components that are at right angles to each other, the radio wave is emitted from a transmitting antenna with its electric component parallel to the plane of the antenna. Thus, a transmitting antenna must be horizontal if it is to radiate horizontally polarized waves.

In order to receive maximum energy from the radio wave when its polarization is the same as that of the wave, television receiving antennas are usually mounted in a horizontal position. In addition, the antenna must possess the necessary characteristics to provide adequate signal strength to the receiver input. This assumes, of course, that there is sufficient field strength at the antenna, because beyond a certain distance from the transmitter, the field intensity is too low for reception with the best possible antenna.

In ideal locations a very simple antenna is satisfactory, but since the vast majority of locations are far from ideal insofar as field intensity and interference are concerned, more complex antennas have been developed. Various elements have been added and certain modifications have been made until some of the modern antennas have assumed fairly elaborate shapes.

In addition to good electric characteristics, the antenna must possess satisfactory mechanical characteristics. It must be strong enough so that it will not be bent out of shape by the wind or by the added weight of a coating of ice and snow. It must be of a material that resists corrosion. In many installations, it is desirable that the antenna be constructed of a light material, and aluminum is a very popular metal for this use since it has a low weight and is noncorrosive when compared with many other metals. The mast and other supporting sections often are made of steel tubing which is coated to prevent corrosion.

THE HALF-WAVE DIPOLE ANTENNA

Like a transmission line, an antenna has distributed inductance, capacitance, and resistance, therefore it resonates at some frequency. When a straight wire is suspended in space, its resonant frequency has a wavelength approximately equal to twice that of the wire, and, when used to intercept r-f energy, a wire of this type is known as a half-wave antenna.

At resonance, the voltage and current distribution on this antenna are as shown in Figure 13B.

Indicated by the broken line curve, the current is minimum at the ends but rises to maximum at the center while the solid line curve shows the voltage is maximum at the ends and minimum at the center.

Referring to Figure 13A, a practical antenna of this type consists of two lengths of conductor, placed end to end, with the inner ends connected to a transmission line, which, in turn, is attached to the receiver input. Connected in this manner, the antenna is called a simple DIPOLE and acts very much like a series resonant circuit. Measured at the center, where the voltage is minimum, the impedance is 73 ohms when the antenna is removed sufficiently from nearby objects to prevent them from affecting its characteristics. However, in practice, this impedance varies with antenna height above ground and its proximity to other metal objects. At the ends, the impedance is in the neighborhood of 2500 ohms, while other points along the antenna has intermediate values.

The dipole directional pattern of Figure 14 shows that the induced signal voltage is at maximum when the radio wave comes from a direction at right angles to the antenna axis. When the direction of the received signal is in line with the antenna axis, the induced voltage is at minimum.

Length of Dipole

Radio energy travels through space in the form of waves, each one of which is equivalent to one electric cycle. As the velocity of all radiated radio energy is the same, in the form of a general equation, the relationship between wavelength and frequency is:

A small Yagi antenna. Only one reflector and three directors are used in this array. A six or eight element array is not uncommon for UHF reception.

Courtesy Insuline Corp. of America

$$\text{Wavelength (meters)} = \frac{300}{\text{Frequency (megacycles)}}$$

and as 300 meters equal 984.25 feet, the equation can be changed to:

$$\text{Wavelength (feet)} = \frac{984}{\text{Frequency (megacycles)}}.$$

Physically, the length of the half-wave dipole is made slightly less than one-half wave. This is necessary because of its CAPACITANCE TO GROUND, END EFFECTS, and the fact that the VELOCITY OF RADIO FREQUENCY ENERGY ALONG A CONDUCTOR IS LESS THAN IN FREE SPACE. If the cross-sectional area of the conductor is kept small in comparison to a half wavelength, all of these effects are relatively constant. This makes it possible to use a correction factor and obtain reasonably accurate results in antenna design calculations.

The physical length of a half-wave antenna can be obtained from the equation:

$$L = \frac{492 \times .94}{f},$$

where: L = length in feet
f = frequency in megacycles
492 = a constant
.94 = correction factor for frequencies above 30 mc.

As an example, assume that it is necessary to determine the physical length of a television antenna that is to operate at a frequency of 69 megacycles. Substituting 69 for f in the equation, the dipole length may be computed by:

$$L = \frac{492 \times .94}{69} = 6.7 \text{ ft.},$$

or 6 ft. 8½ in. (approx.)

This is the total length from one end of the antenna to the other, including the spacing between the inner ends to which the transmission line is connected.

As mentioned previously, the half-wave antenna acts like a series resonant circuit, delivering maximum output at the frequency to which it resonates. However, at all other frequencies the output is less than at resonance. This fact must be considered in antenna design and a resonant frequency chosen so the response over the desired band is satisfactory.

For good results, the frequency used should be the geometric center frequency of the desired band, and may be obtained from:

$$f_g = \sqrt{f_a \times f_b},$$

where: f_g = geometric center frequency
f_a and f_b = the desired frequency range limits.

For example, assume that the desired frequency range is from 54 mc to 88 mc, then:

$$f_g = \sqrt{54 \times 88} = \sqrt{4752} = 69 \text{ mc.}$$

This, then is the frequency that should be used when computing the physical length of a dipole antenna which is to be used over this particular frequency range.

Bandwidth of the Dipole

If the frequency response characteristics of a resonant circuit are plotted in the form of a graph, it is found that the sharpness of resonance is determined largely by the Q of the circuit. When the Q is high, the resonance curve is sharp or narrow, and the circuit gives good response to a narrow band of frequencies but attenuates all others. When the Q is low, the response curve is broad and there is less discrimination against the frequencies above and below resonance.

The same principle applies to antenna response. When a wide band of frequencies is to be covered satisfactorily, the antenna must be designed so that the Q is low. Since $Q = X_L/R$, the ratio of the antenna inductive reactance to its resistance must be low. The relationship between the inductance, diameter, and Q of the antenna is such that an increase in diameter results in a decrease in inductance which, in turn, reduces the Q thereby increasing the bandwidth.

It is fortunate that these relationships exist since a larger diameter element is more rugged physically. The greater bandwidth is accompanied by a decrease in gain at the resonant frequency.

In order to overcome this loss, both the antenna and receiver must be designed for high gain performance. Since a high gain antenna becomes more directional and a high gain receiver is limited by noise, there is a definite limit in the band of frequencies that the antenna can be designed to accept and still provide satisfactory reception. Consequently, it is necessary to install more than one dipole on the mast, each tuned to the mean frequency of different frequency bands.

Fortunately satisfactory results can be obtained in most areas by designing one dipole to the mean frequency of the lower VHF television stations (channels 2-6) band, another to the mean frequencies of the upper VHF band (channels 7-13), and a third one to the mean frequency of the UHF channel stations (14-83).

To make only one UHF antenna array necessary for any one locality, the FCC allocates all channels for the area either in the lower third, middle third, or upper third of the band. Hence, since no more than six channels are allocated to one locality and these are spaced every sixth channel the maximum band that the UHF antenna must be designed for is never more than 6×6×6 or 216 mc. Although many UHF antennas are designed to accept the total UHF band, the narrower band is highly important for good reception in some fringe areas.

THE FOLDED DIPOLE

Figure 15 shows a dipole antenna that has been designed to have a wide band response without using large diameter conductors. Known as a FOLDED DIPOLE, this antenna consists of two closely spaced conductors, or elements, the outer ends of which are connected together.

Electrically equivalent to a single conductor of larger diameter, the folded dipole has a low Q and, thus, a wide band response. Retaining the pickup and directional characteristics of the straight, or simple, dipole, the folded dipole is more desirable when signals from several television stations are to be received.

The folded dipole is a half wave antenna and its length may be computed in the same manner as explained for the simple dipole antenna of Figure 13A.

An important difference between the two antennas is that, at the point of transmission line connection, the folded dipole impedance is 4 times that of the simple dipole. The reason for this difference can be explained in terms of antenna current and impedance, by the a-c power formula $P = I^2Z$.

The r-f power of the simple dipole antenna is:

$$P_D = I^2Z_D,$$

where: P_D = Dipole antenna power in watts
I = current in amperes
Z_D = dipole antenna impedance in ohms.

In the case of the folded dipole, each conductor carries half the total current. Using $I/2$ to represent the current in one conductor, the folded dipole r-f power is given by:

$$P_F = \left(\frac{I}{2}\right)^2 Z_F$$

where: P_F = folded dipole antenna power in watts
I = total antenna current in amperes
Z_F = folded dipole antenna impedance in ohms.

Under given conditions, the r-f power is the same for both antennas, therefore:

$$\left(\frac{I}{2}\right)^2 Z_F = I^2Z_D,$$

which can be simplified to:

$$\frac{I^2}{4} Z_F = I^2Z_D.$$

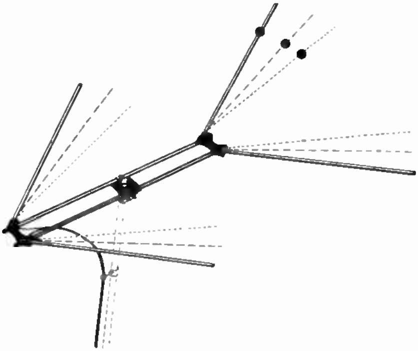

A double vee antenna. These may be designed for all channel reception. Adjusting the elements as indicated by the dotted lines changes the directivity characteristics of the array. Position 3 gives greatest directivity.

Courtesy Hy-Lite Antennae, Inc.

Dividing through by I^2 gives

$$\frac{Z_F}{4} = Z_D, \text{ or } Z_F = 4Z_D.$$

Thus, assuming 73 ohms for Z_D, the impedance Z_F is equal to 4×73 or 292 ohms.

Due to design differences, such as diameter of tubing employed for the conductors and the spacing between elements, there is a wide variation in the impedance of folded dipole antennas made by different manufacturers. For most television installation purposes an impedance of 300 ohms is assumed. Since most television receivers have a 300 ohm input impedance, a length of 300 ohm two-wire parallel transmission line matches the antenna to the receiver and maximum power is delivered to the receiver.

Because the center of the unbroken portion of the antenna is at minimum voltage it may be grounded to a metal supporting structure without affecting the operation. This is an excellent safety feature since it affords lightning protection and also prevents static charges from building up on the antenna.

Some commercial type folded dipoles are constructed from a single piece of tubing which is bent to the shape illustrated in Figure 15, others are made from two separate half-wave lengths of rod or tubing, shorted at the ends, while still others have sliding end-sections which may be adjusted for the desired antenna length.

PARASITIC ELEMENTS

Referring to the pattern of Figure 14, dipole and folded dipole antennas are equally sensitive in two directions and, therefore, receive with equal strength a desired signal from one direction and an undesired signal from an opposite direction. To increase the response to the desired signal and at the same time reduce the response to the undesired signal, many modern antenna systems include additional ELEMENTS mounted close to and parallel with the dipoles of Figures 13A and 15.

To identify the various parts, the dipole connected to the receiver is known as the DRIVEN ELEMENT or antenna, while the additional parts, which have no conductive connection to the dipole, are known as PARASITIC ELEMENTS. The combination of a driven element and its associated parasitic elements is called an ARRAY. With current and voltage distribution as shown in Figure 13B, the midpoints of the parasitic elements may be grounded to the antenna mast.

Known as a DIRECTOR, the parasitic element of Figure 16A is mounted from one-tenth to one-quarter of a wavelength from the driven element in the direction of the desired transmitter. Made slightly shorter, its resonant frequency is higher than that of the driven element, therefore its net reactance is capacitive at the frequency to which the antenna is tuned.

Arriving from the desired transmitter, the r-f wave strikes the director first and induces a voltage that lags the signal field by 90°. Since the director is capacitive at the signal frequency, the director current leads the induced voltage by 90°, and therefore, it is in phase with the signal field. Due to this current, the director radiates an electromagnetic field which functions as a second transmitter. As the radiation from the director is in phase with the signal field, the two add, thereby increasing the field strength at the driven antenna.

On the other hand, when signals arrive from the direction opposite to that of the desired station, the r-f wave strikes the driven antenna first and then the director, where a radiation field is produced in the manner just described. Due to the order in which the elements are cut by the signals, the field radiated by the director reaches the antenna 180° out of phase with the signal field. With this phase relationship the fields oppose each other and thereby reduce the voltage induced in the antenna. Thus, the director increases the antenna sensitivity to signals from the desired direction and reduce its sensitivity to signals from the opposite direction.

Again in Figure 16B, a parasitic element is mounted parallel with and spaced from one tenth to one quarter wavelength from the driven antenna. Here however, the parasitic element is slightly longer than the antenna and placed on the side opposite the desired transmitter. In this position it is known as a REFLECTOR and its greater length causes it to be resonant at a frequency lower than that of the antenna. Due to its lower resonant frequency the reflector is inductive at the frequency to which the antenna is tuned.

With this arrangement, the r-f wave from the desired station strikes the antenna first, then, an instant later, the reflector. Induced by the r-f field, the voltage in the reflector lags behind that in the antenna by an angle that is determined by the spacing between the two elements. In the reflector the induced voltage lags the r-f field by 90° and the resulting inductive current will lag another 90°. In phase with the current, a field is radiated from the reflector and, because of the spacing between them, the portion of this radiation arriving at the antenna is nearly in phase with the r-f wave from the transmitter, thus increasing the field strength at the antenna.

When a signal is received from the opposite direction, the r-f wave strikes the reflector first and induces into it a voltage that lags the field by 90°. The resulting current lags the induced voltage by another 90° and is, therefore, 180° out of phase with the r-f wave. In phase with the current, the field radiated by the reflector is 180° out of phase with the r-f wave and they tend to cancel each other, thus greatly reducing the sensitivity of the antenna to the undesired signal.

Thus, a parasitic element causes the antenna to become directional and, in many installations, it can be oriented so that its sensitivity to a desired signal is increased while its sensitivity to an undesired signal or interfering source of r-f is decreased.

Figure 17 shows an antenna array in which a folded dipole is used with one reflector and two directors. By choosing the proper element spacings, such a combination offers a considerable gain over that of the dipole alone. However, the spacings which provide maximum gain also gives increased selectivity and, for television reception, a highly selective antenna is not always desirable because it may be too selective to receive all the desired channels.

The relation of the directional patterns to the number of elements employed is shown in Figure 18. Curve 1 is the pattern obtained when the antenna (a half-wave dipole) with one parasitic element is used. The pattern is broad near the antenna and approaches a circle in shape.

As shown by curve 2, when the dipole and two parasitic elements are used, the pattern becomes more narrow and the sensitivity increases. Finally, curve 3 shows that a total of 4 elements produces a very narrow pattern with high sensitivity. An antenna system employing four or more elements often is called a YAGI.

Using a simple dipole antenna as a reference, the curves of Figure 19 show the db gain vs. element spacing of an antenna with one parasitic element. The director curve shows that the maximum gain occurs with a spacing equal to one-tenth of a wavelength and that the gain goes down as the spacing is increased or decreased. The other curve shows that the gain is maximum when the reflector is spaced about two-tenths of a wavelength from the antenna.

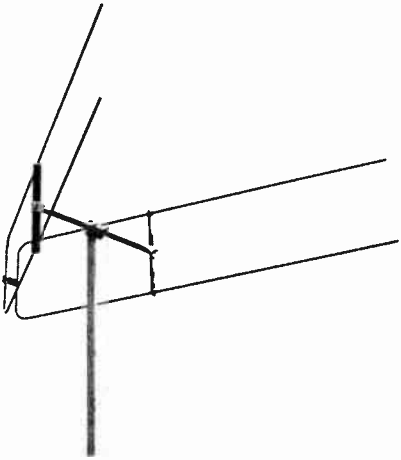

Known as the "Ultra Vee" antenna, this array is particularly suited for UHF reception. The gain varies between 7 and 11db from channels 14 to 83.

Courtesy Channel Master Corporation

The choice of directors or reflectors and the number of each is not one that depends on personal preference in most cases. There are very definite basic reasons which are determined by the characteristics of parasitic elements and the requirements of the particular installation.

The curves of Figure 19 show that a director spaced .1 wavelength will give greater gain than is given by a reflector of any given spacing. However, there are other factors to consider. Although the reflector produces slightly less gain, it makes the tuning broader and since broad tuning is desirable for television, the reflector is the best to use.

The number of parasitic elements to use also will depend upon a number of factors. It would not be advisable to use more than one reflector because the field has been weakened by the first in the region where the second would be placed. Also, the second reflector would be placed about a half wave length from the antenna and at this point the gain will be low even if the first reflector had not weakened the field.

If a second director is used, however, it will be in the path of the incoming signal and more than that, it will be approximately .2 wavelength from the antenna. This means that the gain of the antenna can be increased appreciably by using more than one director. As the curves of Figure 18 show, however, more elements make the array more highly selective and too many elements will make it too selective for television. The choice of the number of parasitic elements will mean a compromise between desired directional characteristics and broadness sufficient for good reception of all TV stations within range.

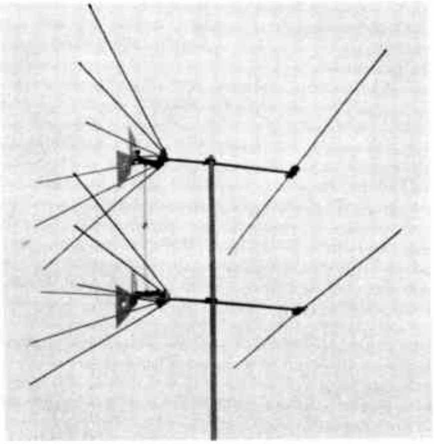

The "Ultra Fan" array is suitable for all channel reception. Shown are two arrays stacked for added gain.

Courtesy Channel Master Corp.

ADJUSTABLE V ANTENNA

In some locations, obstructions prevent good reception of the direct waves from the transmitting antenna, and reflected waves are found to give better results. These reflected signals may not be polarized as they were when they left the transmitter, but instead, may have a tendency toward vertical polarization. For best reception, therefore, the receiving antenna polarization should be changed accordingly.

Shown in Figure 20, the ADJUSTABLE V antenna is similar to the half-wave dipole, but it can be adjusted to permit the two quarter-wave elements being bent up to resemble the letter V. The angle between the quarter-wave elements is determined experimentally since it depends upon the degree of "polarization distortion."

FANNED ANTENNAS

A number of antennas have been specifically developed to cover the extremely wide band of television carrier frequencies. Shown in Figure 21, an antenna of this type has been designed by the Andrew Corporation. Because of its fan-like arrangement it is known as the DI FAN. Its electric characteristics are such that it covers the exceptionally wide range of 44 to 216 mc without serious attenuation. As this band of VHF frequencies includes the FM radio channels, this single antenna is satisfactory for radio-television combination receivers.

The Di Fan antenna broad band characteristics are shown by the horizontal directivity pattern of Figure 22A. The solid line pattern represents the directivity of reception through television channels 2 to 6 and the FM channel, the recorded data having been taken at a frequency of 82 mc. In the Figure, the axis of the Di Fan is represented as being in the horizontal direction along graph line 270° to 90°. Therefore, as with the straight dipole, the reception is greatest in a direction broadside to the axis of the antenna. Determined at a frequency of 204 mc, the dashed-line pattern represents the directivity for television channels 7 to 13, and compared to the 82 mc pattern, the angle of acceptance is enlarged.

The graph of Figure 22B shows that the db loss due to mismatch is relatively low over the range of frequencies from 40 to 110 mc. In general, the straight dipole has low mismatch losses at frequencies close to resonance only, and relatively large losses at other frequencies. However, because the Di Fan antenna is tuned broadly to all VHF television channels, the mismatch losses are low and fairly constant over the entire band indicated.

Fundamentally, the Di Fan antenna is a modified dipole and, because of the arrangement of the elements, has an impedance of approximately 300 ohms. The "arc" of the fan varies with different models but in general is between 30° and 45°.

THE CONE ANTENNA

Called a CONE ANTENNA because of its shape, another broad band unit is shown in Figure 23. It is approximately three-quarters of a wavelength long and has characteristics similar to those of the Di Fan antenna. The cones may be constructed entirely of sheet metal or to reduce wind resistance, of evenly-spaced copper wire rods, soldered to a piece of sheet metal at the apex and to a copper ring at the large end of the cone. Both types of construction result in satisfactory reception. The solid type is simpler to construct and is favored for UHF reception whereas the open type reduces weight and wind resistance which are important for the larger VHF models.

The cone antenna impedance decreases as the diameter at the base of the cone is increased. Thus, the unit can be designed to provide good impedance match with standard transmission lines. Similar to the folded dipole, the cone antenna is electrically equivalent to a conductor of large diameter which results in a low Q, and therefore, broad band characteristics.

The antenna of Figure 24 is a double dipole with the pairs of elements in a reclining V arrangement and is often called a "lazy X." The spacing commonly used between the ends is equivalent to ⅛ wavelength on channel 2 and ½ wavelength on channel 13.

A further design tilts the free ends of the dipoles forward or toward the transmitter, thereby increasing the directivity. This results in an antenna very similar to a cone antenna with all but four of the rods removed. Common names for this type are the CONICAL ANTENNA and the CONICAL V BEAM. Compared to the simple dipole it is broad and provides greater gain and a higher signal-to-noise ratio.

Another modified form of the antenna of Figure 24 uses a three dipole arrangement instead of two. The free ends are usually tilted forward and the three dipole arrangement provides increased gain on the high frequency channels.

VHF TELEVISION AND FM ANTENNA

A well known commercial VHF television and FM antenna is the model shown in Figure 25. It consists of a relatively long thin dipole mounted close to a relatively short thick dipole, the center of which is grounded to the metallic supporting mast. At its ends, the short dipole is connected to the approximate midpoints of the sections of the long dipole by inductive rings which give mechanical support to the thin dipole, while providing a conductive path for the signal energy picked up by the short dipole.

For the low band VHF channels, this antenna functions as a broad band folded dipole resonant at approximately 65 megacycles, while, for the high band VHF channels, the long dipole is 1½ wavelengths long at the center frequency of the band, and the short dipole is one-half wavelength long at the same frequency. The transmission line is connected to the inner ends of the long element and the inductive rings couple the two dipoles so that their respective currents are approximately in phase. Therefore, the energy picked up by the short dipole adds to that in the long one, thus increasing the sensitivity of the complete unit.

As explained, for best efficiency, the antenna impedance should match that of the transmission line as nearly as possible. However, antenna impedance varies with frequency and, to maintain the proper match, this variation should not be excessive over the band for which an antenna is designed. At a given frequency, the standing wave ratio on the line connected to the antenna is an indication of the impedance match.

ARRAYS

In many television receiving installations it is desirable to obtain greater signal pickup than is provided by a single element antenna such as a straight dipole or a folded dipole, etc. Also, usually it is necessary that the antenna receive signals from one direction but reject them from the opposite direction. To accomplish this, antenna systems having two or more properly spaced elements are employed, all of which may or may not be conductively connected to the lead-in.

Any system of two or more elements is an array. Two types, the PARASITIC ARRAY and the STACKED ARRAY are used for television, with some installations employing a combination of both. Regardless of their individual arrangement, all of these systems operate on the same general principles explained above for parasitic elements.

Parasitic Arrays

A parasitic array employing four elements was shown in Figure 17, and Figure 18 shows how the directivity and gain are proportional to the number of elements used. In addition, the parasitic elements have considerable effect on the dipole impedance at the point where the transmission line is connected.

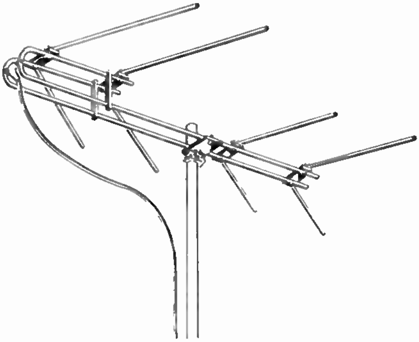

The "Trombone" array is an all channel antenna. Note the use of tubular twin lead in this picture.
Courtesy Hy-Lite Antennae, Inc.

As mentioned earlier in the lesson, the impedance is resistive at this point, and Figure 26 shows how this resistance varies with the spacing between a straight dipole and reflector. With a spacing of .2λ, for example, the resistance is only 40 ohms. When both a reflector and a director are used, the resistance drops to 10 or 15 ohms. In a similar array, the resistance of a folded dipole with parasitic elements are higher than for the straight dipole.

As more parasitic elements are added, the gain and the current are increased. The increase in current did not occur as a result of any increase in the strength of the signal from the transmitter, but as a result of the action of the parasitic elements. When these elements were added, the same transmitted signal produced a greater current in the antenna. The effect, then, of the parasitic elements is to decrease the antenna impedance and the result is an increase in current.

The IN LINE antenna shown in Figure 27 is a Duo-folded dipole parasitic array consisting of two folded dipoles and a reflector. The small folded dipole acts as the antenna and the large dipole as a reflector for the high band VHF channels. On low band channels, the large folded dipole serves as the antenna, and the small one as a director. The third element serves as a reflector on all 12 VHF channels.

Stacked Arrays

By STACKING or mounting antenna elements one above another, the sensitivity can be concentrated at a low vertical angle, thereby rendering it relatively insensitive to noise interference from above and below the antenna. In the stacked array of Figure 28A, the element spacing and connections are such that the signals from the upper and lower dipoles are in phase at the point where the lead-in is connected.

A "bow tie" antenna with a sheet reflector is suitable for all UHF channels. The two holes in the bow reduce wind resistance.

Courtesy of Channel Master Corporation

This condition also can be obtained by the method shown in Figure 28B. Here it is necessary to transpose, or cross over, when the feed point is as shown, in order to preserve the correct polarities on the dipole elements. As the polarity reverses every half wave length, connecting the upper left hand element to the lower right hand element at the transmission line as shown and connecting the remaining elements in a corresponding manner, keeps the elements phased properly.

Consisting of two full-wave dipoles spaced one-half wavelength apart, the unit of Figure 28C is known as a LAZY H antenna. A typical television application of this antenna is shown in Figure 29. It contains four vertically stacked dipoles with a reflector for each, making a total of 8 full-wave elements. The impedance of the system can be varied to match the transmission line by adjusting the spacing between the elements.

Figure 30 shows two stacked folded dipoles with reflector and, as in Figure 28A, the transmission line connects to the terminals provided midway between the folded dipoles. This antenna provides wider bandwidth than is obtained with a similar array employing straight dipoles and reflectors with the sensitivity and directivity being the same for both arrangements.

The CONICAL VEE antenna of Figure 24 often is provided with a parasitic reflector resembling the driven element in design, or it may be a single long rod. Two or four such antennas with reflectors, when stacked, provide reception on all VHF channels with good gain and a high signal-to-noise ratio. When the three dipole design is provided with reflectors as shown in Figure 31A, the characteristics of this FAN antenna make it quite satisfactory for fringe area reception and greater gain on the higher band VHF channels.

By adding triangular elements in front as shown in Figure 31B which also function like Figure 23, this ULTRA FAN antenna provides good reception on all VHF and UHF channels. On the low band VHF channels, the array functions as a conical antenna with a parasitic reflector. On the high band VHF channels, the front elements form a large diameter Vee antenna. For the UHF channels the antenna is a triangular dipole with a "sheet" reflector. That is, the elements behind the dipole reflects the electromagnetic waves in the same manner as a polished surface reflects light rays. Although a solid sheet of metal could be used, to avoid excessive wind resistance an electric equivalent often is formed as shown or by means of this crosshatch of rods welded together as shown in Figure 33A.

UHF ANTENNAS

In those areas where both VHF and UHF channels exist, it is necessary to use either an all channel antenna like the Ultra Fan of Figure 31B to receive all channels or to use separate antennas. Naturally whenever possible only one antenna is used to save costs. Only where high gain antennas are indispensible to attain satisfactory reception, such as fringe areas, are more than one antenna used.

Besides the Ultra Fan, the DOUBLE VEE of Figure 32A and the TROMBONE of Figure 32B are popular antennas. Both of these arrays are modifications of the Vee of Figure 24. Like the Vee, the impedance of the antenna is determined by the angle formed by the elements and the directivity and gain are determined by the reflections used and the degree to which the elements point forward. Also like the Vee, these arrays may be stacked for added gain.

Although certain high gain arrays are entirely too bulky for VHF applications, they prove very practical for the UHF channels. For instance, a Yagi, like Figure 17 but using six or eight directors, would be very expensive for VHF but makes an economical UHF array. In fact, several such arrays can be stacked without becoming too bulky.

The BOW TIE and reflector as pictured in Figure 33A is another good array for UHF. Usually it is designed to accept Channels 14-83 with equal gain and the large sheet reflector makes it almost impossible to receive an interfering signal from the back side and where necessary two such units can be stacked for increased gain.

The CORNER antenna of Figure 33B is also a popular UHF array. Although bulkier than the others, it does provide high gain and good directivity. Parasitic elements, spaced parallel to each other, form two sheet reflectors which reradiates the signal intercepted by them in to the driven element. Although a parabolic surface would provide higher gain, it has to be assembled at the factory and, therefore, is difficult to ship. On the other hand the corner antenna is readily assembled on location and provides almost as much gain as the parabolic array.

IMPEDANCE MATCHING

To provide for proper impedance matching to these antennas, transmission lines are commercially available in various impedances. For example, twin-lead lines may be purchased with either 75, 150, or 300 ohms impedance; while coaxial cables may be obtained having 48, 52, 58, 73, 95, 125, and 150 ohms impedance. Therefore, it is possible to select a line to match almost any antenna system. The table of Figure 34 lists typical values for the common antenna types.

Where the antenna impedance is not near that of any of the lines available, or where a line of different impedance is desirable for some other reason, a "quarter-wave section" of transmission line may be employed as an impedance matching transformer as shown in Figure 35. For example, most television receivers have an input impedance of 300 ohms, and it is common practice to employ 300 ohm twin-lead to obtain the proper impedance match between the transmission line and receiver. However, when a straight dipole antenna is used with this arrangement a mismatch of 300 to 73, or about 4 to 1, exists between the transmission line and antenna.

To provide the required match here, the impedance Z_o, which the quarter-wave section should have, is determined from the equation:

$$Z_o = \sqrt{Z_1 Z_2},$$

where: Z_1 = the antenna impedance
Z_2 = the impedance of the lead-in.

Substituting the values given above in this equation:

$$Z_o = \sqrt{73 \times 300} = \sqrt{21{,}900} = 148 \text{ ohms}$$

Hence, a section of 150 ohm twin-lead provides almost perfect matching.

Due to the fact that a radio wave travels slower along a conductor than it does in free space, the ratio of velocity in a given conductor to that in free space is specified, and is called the "velocity factor." Therefore, the actual physical length of the matching section will depend upon the center frequency, f_g, of the band to be received, and the velocity factor, V, in the particular type of line used.

Typical factors are: 0.82 for 300 ohm twin-lead, 0.77 for 150 ohm twin-lead, 0.71 for 75 ohm twin-lead, and 0.66 for coaxial cable, although these vary somewhat with different manufacturers.

The length, L, of the quarter-wave section may be found from:

$$L = \frac{2952V}{f_g}$$

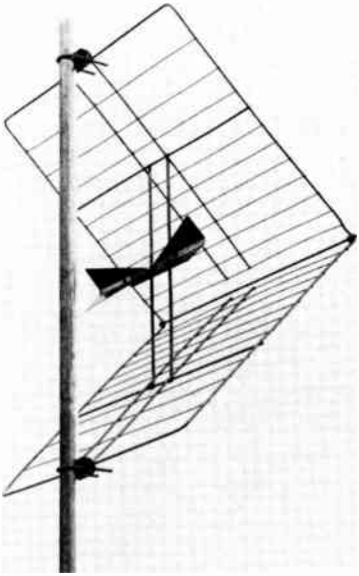

This "corner antenna" is especially suited to UHF reception. When necessary, these are stacked for added gain.

Courtesy of Channel Master Corporation

where: L = length in inches
V = velocity factor
f_g = geometric center frequency of band in megacycles,
2952 = a constant.

Therefore, assuming reception of channels 2, 4, and 5 is desired, covering a band of from 54 to 82 megacycles, the geometric center frequency is given by:

$$f_g = \sqrt{54 \times 82} = \sqrt{4428} = 66.5 \text{ mc.}$$

Substituting $f_g = 66.5$ mc and $V = 0.77$ in the equation, gives:

$$L = \frac{2952 \times 0.77}{66.5} = 34.2 \text{ inches,}$$

as the required physical length of 150 ohm twin-lead matching section. Of course, to this length should be added whatever lengths are needed for splicing. Good soldered joints should be made to reduce losses and prevent deterioration. The antenna, matching section and 300 ohm line are shown in Figure 35.

As the antenna impedance varies with frequency, this arrangement provides perfect matching at the center frequency only, with some mismatch at frequencies above and below f_g. Therefore, it is not absolutely necessary that the impedance Z_o of the matching section used be exactly equal to the value given by the equation above.

To illustrate the leeway permissible in practical installation work, suppose it is desired to insert a quarter-wave matching section between a 300 ohm lead-in and an antenna consisting of a straight dipole with one reflector and one director. Such an antenna has an impedance of about 25 ohms. Therefore, the matching section impedance should be:

$$Z_o = \sqrt{25 \times 300} = \sqrt{7500} = 86.6 \text{ ohms.}$$

However, in practice a quarter-wave section of 75 ohm line provides a match which is sufficiently close.

STUDENT NOTES

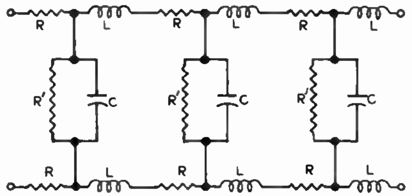

FIGURE 1

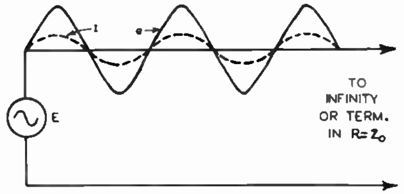

FIGURE 2

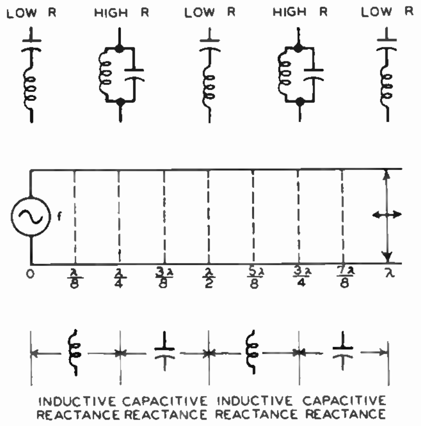

FIGURE 3

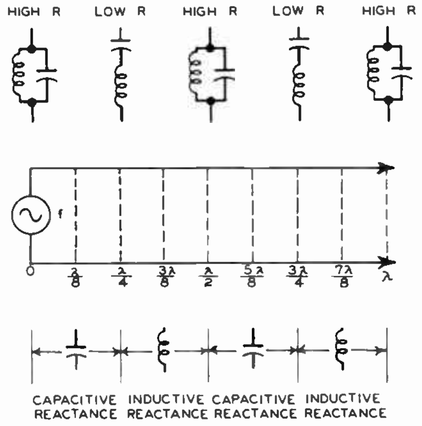

FIGURE 4

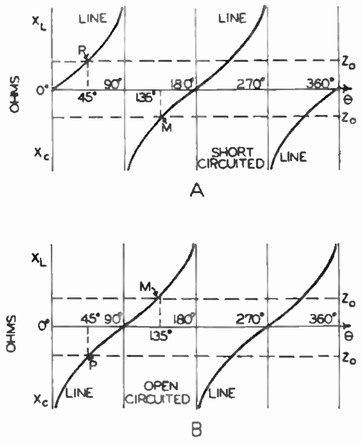

FIGURE 5

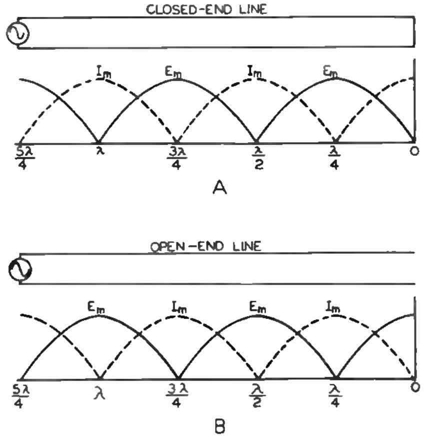

FIGURE 6

TPC-16

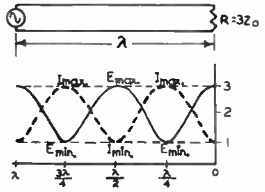

FIGURE 7

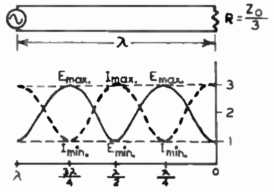

FIGURE 8

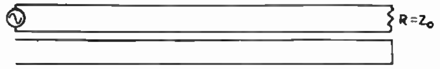

FIGURE 9

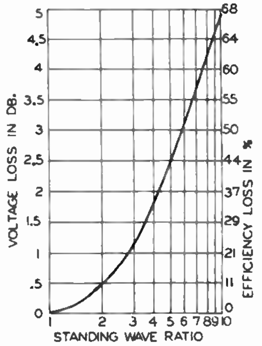

FIGURE 10

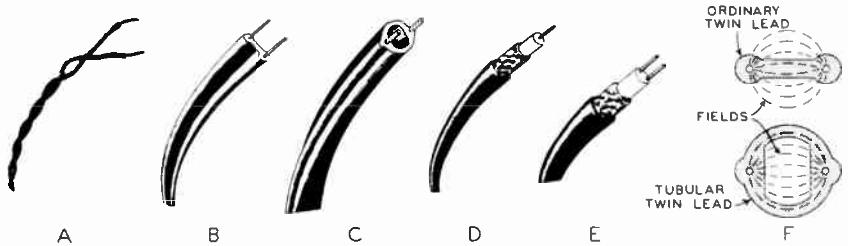

FIGURE 11

TYPE OF LINE	SURGE IMPEDANCE		ATTENUATION IN DB PER 100 FT. AT		EFFICIENCY IN %		MAXIMUM RECOMMENDED LENGTH IN FEET		BALANCED OR UNBAL.	SHIELDED OR UNSH.
	FROM	TO	50 MC	500 MC	VHF	UHF	VHF	UHF		
(A) TWISTED PAIR	40	150	6 50	——	22	——	50	——	BAL	UNSH
(B) TWIN LEAD	75	300	.85	5.7	82	27	150	50	BAL.	UNSH.
(C) TUBULAR TWIN LEAD	75	300	.69	3.4	85	46	200	100	BAL.	UNSH.
(D) COAXIAL	48	150	.40	5 0	92	32	400	50	UNBAL	SH.
(E) SHIELDED PAIR	90	150	3.00	——	50	——	100	——	BAL.	SH.

FIGURE 12

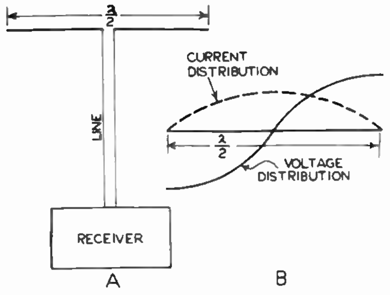

TPC-16

FIGURE 13

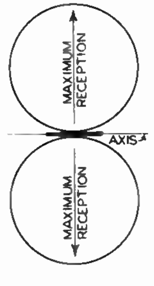

FIGURE 14

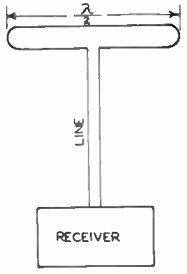

FIGURE 15

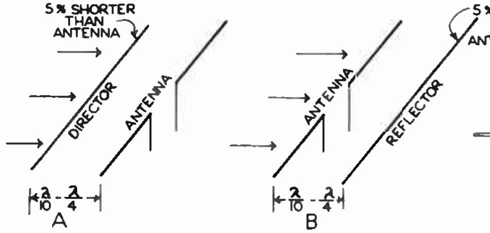

FIGURE 16

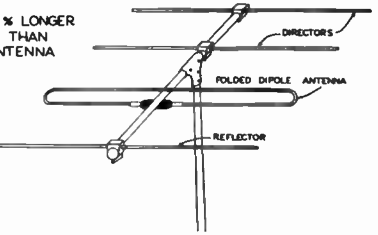

FIGURE 17

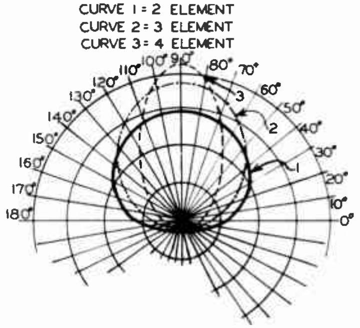

FIGURE 18

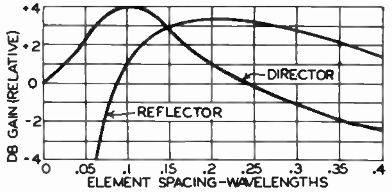

FIGURE 19

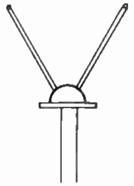

FIGURE 20

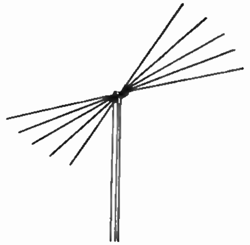

FIGURE 21

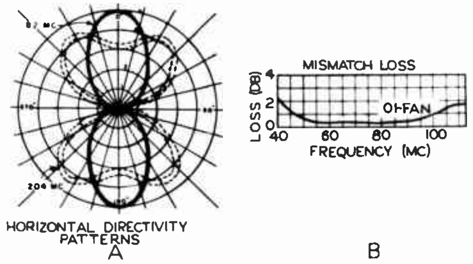

FIGURE 22

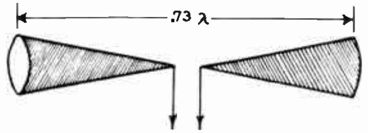

FIGURE 23

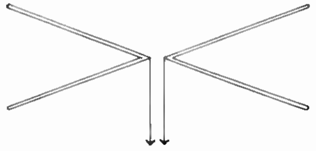

FIGURE 24

STUDENT NOTES

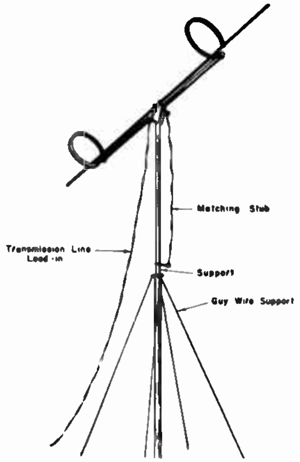

FIGURE 25

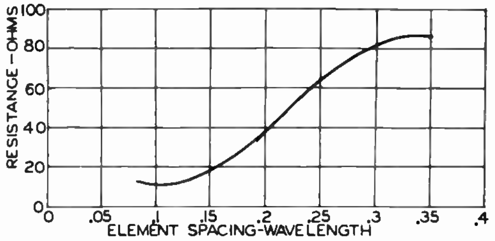

FIGURE 26

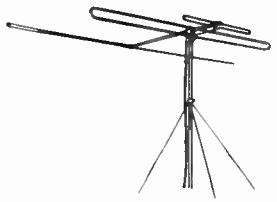

FIGURE 27

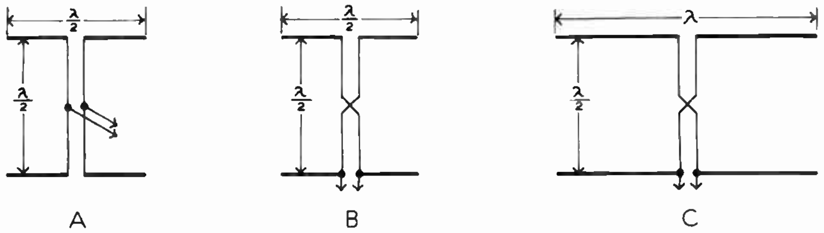

FIGURE 28

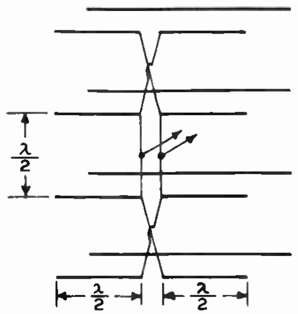

FIGURE 29

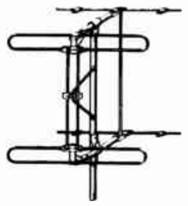

FIGURE 30

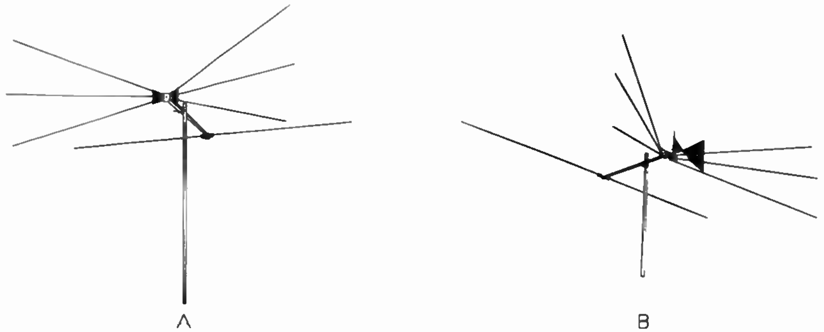

FIGURE 31

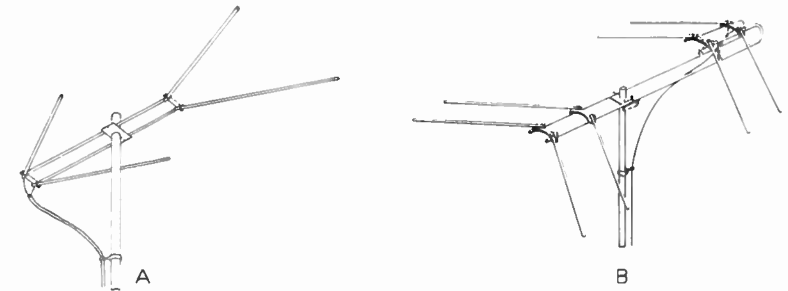

FIGURE 32

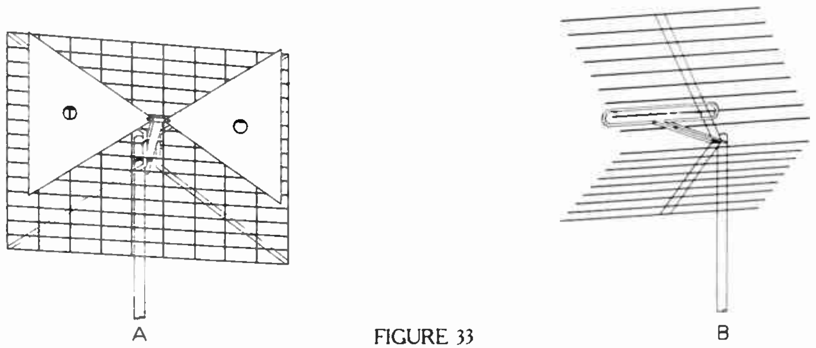

FIGURE 33

ANTENNA	IMPEDANCE IN OHMS	DB GAIN	
		VHF	UHF
DIPOLE	73	0	—
DIPOLE WITH REFLECTOR	60	3–4	—
FOLDED DIPOLE	300	0	—
FOLDED DIPOLE WITH REFLECTOR	250	3–4	—
STACKED DIPOLES WITH REFLECTORS	120	6–7	—
IN LINE	300	2–5	—
CONE	200–600	1	2
ULTRA FAN	200–300	3	6
DOUBLE VEE	300	4	7
TROMBONE	300	6	7
BOW TIE WITH REFLECTOR	300	—	10
CORNER	300	—	8–13

FIGURE 34

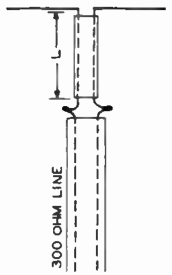

FIGURE 35

DeVRY Technical Institute

Formerly DeFOREST'S TRAINING, INC.

4141 WEST BELMONT AVENUE CHICAGO 41, ILLINOIS

QUESTIONS

Antennas and Transmission Lines—Lesson TPC-16A **Page 39**

4

How many advance Lessons have you now on hand?..........................

Print or use Rubber Stamp.

Name.. Student No......... ....

Street...Zone.......................... Grade...............................

City...State................................ Instructor.. ....

Write your answers on the "Ans." line below each question. If more space is needed use reverse side of this page.

1. Give 6 factors that affect the characteristic impedance of a transmission line.

Ans...

2. How does the impedance of a shorted line at even multiples of a quarter wavelength differ from that of an open line of the same length?

Ans...

3. What is meant by "standing wave ratio?"

Ans...

4. Using the curve of Figure 10, determine the voltage loss in db and the efficiency of a transmission line if the standing wave ratio is 5.8.

Ans...

5. What are 2 advantages of the shielded pair transmission line?

Ans...

6. Why is the physical length of an antenna shorter than the electrical length?

Ans...

7. What effect does increasing the diameter of the antenna element have on the bandwidth?

Ans...

8. What would be the physical length of a half wave antenna based on the geometric center frequency for the range of 174 to 216 mc?

Ans...

9. What is meant by the term "stacking?"

Ans...

10. Calculate the impedance of a quarter wave matching section required to couple an antenna having an impedance of 40 ohms to a 300 ohm transmission line.

Ans...

FROM OUR *Director's* NOTEBOOK

CANDOR

Whenever an individual starts off a statement that he or she is about to make with a "Now Candidly—", I immediately start wondering if ALL that has been said up to that point is to be fully accepted.

Candor is ALL the Truth—spoken without holding back a thing—and that may not always be advisable.

We'd probably have few friends if we made a practice of being perfectly Candid in all our conversations—while continuing to Speak as Often and as Much as we do.

Condor can help us to make friends and to keep them. It can give all we say the guarantee of believability. But to practice Candor we must observe one rule—to speak ONLY when speaking ALL The Truth can help or benefit Some one, while Injuring or Offending None.

Yours for success,

W. C. DeVry

DIRECTOR

PRINTED IN U.S.A.

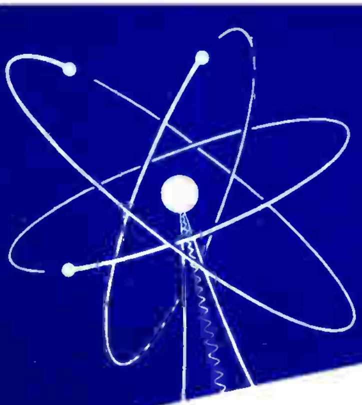

TV RECEIVER
RF SECTION

Lesson TPC-17A

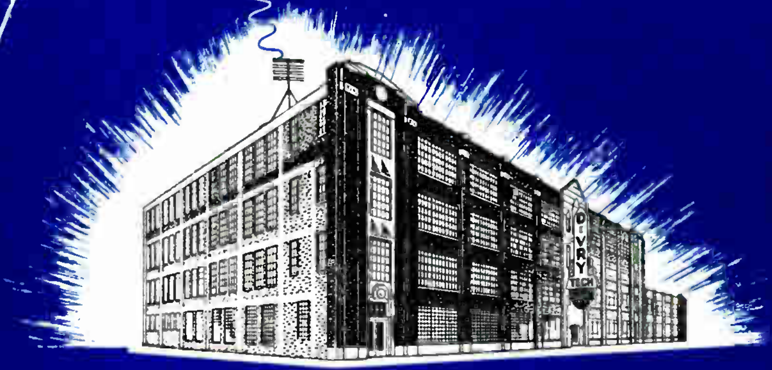

-17

DeVRY Technical Institute

4141 W. Belmont Ave., Chicago 41, Illinois
Formerly DeFOREST'S TRAINING, INC.

TPC-17A

TV RECEIVER
R-F SECTION

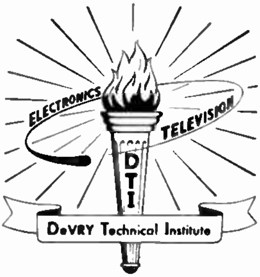

4141 Belmont Ave.

Chicago 41, Illinois

UHF converters are used with existing VHF receivers to adapt them for receiving channels 14 through 83. The unit on top of this receiver is continuous tuning.

Courtesy P. R. Mallory & Co., Inc.

Television

TV RECEIVER R-F SECTION

Contents

The sovereignty of man lies hid in knowledge, wherein many things are reserved that kings with their treasure cannot buy, nor with their force command.

—Bacon

TV RECEIVER R-F SECTION

The preceding lessons of this section of the training have described modern television systems with respect to requirements and present standards and also explained various specialized circuits necessary for the reproduction of satisfactory images on the picture tube screen. Also, comparisons were made to show that basically, the signal circuits of a television receiver are quite similar to those of an all wave superheterodyne type of radio receiver.

Starting with this lesson, the explanations follow the paths of the modulated video and sound carriers through the various receiver sections to their respective detectors, the outputs of which are applied to the video and audio amplifiers and the deflection circuits. In studying these explanations always remember that a television receiver is merely a special form of radio receiver and operates on exactly the same general principles.

R-F SECTION REQUIREMENTS

As shown in the block diagram of Figure 1, the television receiver r-f section may be divided into four general sections, the functions of which are: (1) r-f amplifier, if any, (2) mixer, (3) oscillator, and (4) tuning system. Of these, the first three are electron tube stages while the fourth includes the rotating switch or equivalent arrangement for changing the values of L or C in the tuned circuits, to provide for tuning from channel to channel.

The functions of the television receiver r-f circuits are similar to corresponding circuits in a conventional broadcast or all-wave superheterodyne receiver. The r-f amplifier selects the desired carrier signal and amplifies it while rejecting the undesired signals. In the mixer tube, the amplified signal is combined with a locally generated r-f signal, the frequency of which differs from that of the incoming signal by a fixed amount. When the two signals are mixed, several beats are produced in the mixer output. The beat which is equal to the difference between the two signals is used as the intermediate frequency and is applied to the i-f amplifier.

To tune an "all-wave" type of radio receiver over its frequency ranges, the input stages include some sort of a "band" switch arranged to connect different sets of coils into the active circuits. These bands may be named "Broadcast," "Police," "Aircraft," "FM," and so on, or it may be calibrated directly in kilocycles or megacycles. With the switch set in any position, the controls tune the receiver across the indicated band.

Similar circuit arrangements are necessary in a television receiver but each television broadcast station is allocated an entire six megacycle band known as a CHANNEL. At present 82 channels, numbered consecutively from 2 to 83, are in use. Because of this arrangement, it is customary to refer to television stations by channel number instead of by call letters or carrier frequencies. Thus, the television receiver band switch positions are marked in channel numbers.

Due to the higher frequencies and bandwidth required, great care must be exercised in designing and servicing the r-f section of a television receiver. Usually, these circuits are manufactured as a separate sub-assembly, called a tuner, and mounted on the receiver chassis as a unit.

ELECTRON TUBE PROPERTIES

At the very high (VHF) and ultra high (UHF) carrier frequencies used for television, electron tubes acquire certain capacitive, resistive, and inductive properties which place definite limitations on their operation. As explained in a former lesson, in an electron tube circuit there are capacitances between the various electrodes of the tube as well as stray capacitances between the tube socket connections, tube element leads, and chassis, etc. When a signal is applied to the stage there is an additional HOT INPUT CAPACITANCE, due to the production of displacement current in the grid circuit.

These various inherent capacitances limit the tuned circuit L-to-C ratio and, therefore, tend to decrease the circuit Q. Since this ratio limits the amplifier gain for a specific bandwidth, electron tube capacitances are an undesirable property for high frequency amplification.

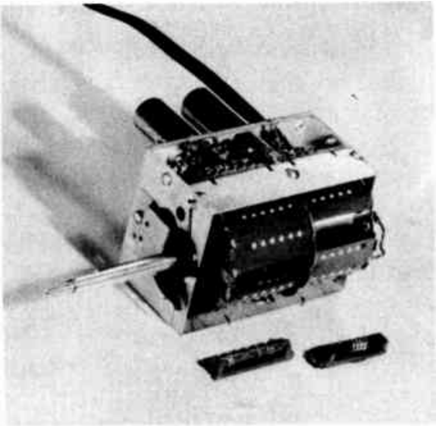

The 300 ohm transmission line input to a turret tuner is shown at upper right. Two "snap in" coils are also shown. At left is the oscillator r-f output, and mixer coils for channel 10 and at right is the r-f input transformer.

Courtesy Standard Coil Products Co.

In electron tube operation at high frequencies, another limiting factor is the conductance between the cathode and grid. Conductance is the inverse of resistance. A high tube input conductance is the equivalent of a low cathode to grid resistance which shunts the grid tuned circuit and lowers its Q.

The tube input conductance is composed of two components: the COLD CONDUCTANCE and the HOT CONDUCTANCE. The cold conductance is due to the dielectric losses in the glass envelope, the insulating supports and the lead wires of the tube. The hot input conductance is due to a change in the grid voltage-displacement current phase relationship at very high frequencies. This phase relationship is equal to 90° at the low, medium, and medium-high frequencies.

However, at very high and ultra high frequencies, the period or time of one cycle becomes comparable to the TRANSIT TIME taken by the electrons in traveling from cathode to plate, inside the tube. This fact causes the displacement current to lead the grid voltage by less than 90° and has the same effect as a resistor placed between the grid and cathode of the tube.

Adding to the difficulties of VHF and UHF amplification, a third electron tube property is the inductance of the cathode lead. This lead is common to both the cathode and grid circuits and the emf developed across it by the plate current causes a small component of displacement current that is in phase with the grid voltage. Similar to that produced by the transit time effects, this in-phase current provides another source of conductance which further decreases the total input resistance of the tube.

In electron tube circuits the random movement of electrons in the conductors and tubes, generates "noise" which is added to the desired signals. All conductors contain free electrons that are in continuous random motion. At any instant, it may be expected that more electrons are moving in one direction than in another, with the result that a voltage will be developed between the ends of the conductor.

This voltage varies in a random manner and thus represents noise energy distributed from the very lowest to the very highest frequencies. Since the motion of the electrons results from thermal action, the name thermal-agitation noise has been given to this effect. Because the magnitude of the noise voltage depends upon the resistance across which it is generated, it sometimes is called resistance noise.

Random noise similar in character to that produced in a resistor is generated in an electron tube as a result of irregularities in the electron flow. Although tube noise may be divided into several classes, those that must be considered in radio and television receivers are shot-effect and current partition noises.

Shot-effect noises are produced as a result of random variations in the plate current. Actually, the cathode-to-plate electron flow in an electron tube is not a perfectly constant stream but varies slightly from instant to instant. In addition to the relatively large variations of plate current caused by signal voltage on the grid, minute plate current variations are produced, apparently due to the fact that the electrons tend to leave the cathode in groups or bunches. These plate current variations cause random plate voltage variations and thus "noise" is produced in the plate circuit.

Current partition noises arise from the chance variation in the division of current between two or more positive electrodes. Because it has only one positive electrode, the plate, a triode type tube does not generate noise of this type. However, a pentode type tube employs two positive electrodes, the plate and screen grid, each of which receives a portion of the total current. At any instant, more or fewer than normal electrons may strike the screen grid and thus cause variations in the plate current and voltage. Because of this random variation in the division of current between the screen grid and plate, the total noise output of a pentode is from three to ten times that of a triode.

In the receiver r-f section, high stage gain is desirable since the more the signal is amplified before the noise produced in the following stages is added, the higher the over-all ratio of signal-to-noise. Stage gain is directly proportional to the plate load impedance, to the amplification factor (mu) of triode tubes, and the transconductance (g_m) of pentode tubes, and is inversely proportional to the total capacitance shunting the circuit. Therefore, to provide high stage gain, an amplifier tube should have high mu or g_m and low capacitance between its elements and between the element leads.

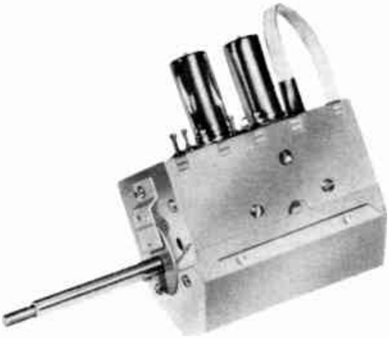

The cascode tuner is provided with complete shielding of tubes and circuits. Note the fine tuning capacitor mounted on the front is operated by the outer shaft.

Courtesy Standard Coil Products

HIGH FREQUENCY TUBES

Developed for use in television circuits and similar equipment operating at high frequencies, miniature tubes have a particularly efficient cathode, close spacing between control grid and cathode, and physically small tube elements. Because of the more efficient cathode, adequate plate current is obtained in spite of the small size of the tube elements. The close grid-cathode spacing gives the grid greater control over the space charge, and results in relatively high values of amplification factor and transconductance. The small physical size of the elements results in lower interelectrode capacitance and, to decrease the total tube capacitance, the various element leads are short and widely spaced.

The input impedance of an electron tube contains a reactive component due to the capacitance between grid and cathode plus a resistive component due to the transit time effect and the cathode lead inductance, as previously explained. At very high frequencies, both the reactive and resistive components are low with ordinary tubes and, therefore, the tube input impedance has a considerable shunting effect on the plate load impedance of the preceding stage, the gain and selectivity of which are reduced thereby.

As the miniature tube has low interelectrode capacitance, its input impedance reactive component is relatively high. Because of the small size of the tube elements, they can be placed closer together, thus providing lower input conductance due to decreased electron transit time. Also, the input conductance is decreased because of the lower inductance of the shorter cathode leads.

Since conductance is the reciprocal of resistance, the low input conductance of the miniature tube results in a high resistive component of the input impedance. Thus, with both reactive and resistive components high, the input impedance of the miniature tube has less shunting effect on the plate load impedance of the preceding stage.

Shown in Figure 2 are the RTMA Standard socket connection diagrams of a number of tubes commonly used in television receiver r-f sections. In the upper left of the Figure the diagrams for the type 6AU6, 6BH6, and 6CB6 are the same except for the connections to the cathode and the suppressor grid. For the 6AU6, the suppressor grid connects to socket terminal 2 and the cathode to socket terminal 7, while the reverse of these connections is made for the 6BH6 and 6CB6. All three are sharp cutoff pentodes of miniature construction, designed for use in r-f and i-f circuits of television receivers. The operational and rating differences between these tubes are given in the chart in Figure 3.

At the lower left of Figure 2, is shown the basing diagram for the miniature types 6AK5, 6AG5, and 6BC5 which have internally connected suppressor grids. Note that, in these tubes, the cathode has two leads, one of which connects to socket terminal 2 and the other to terminal 7. This arrangement permits the grid circuit bypass capacitors to be connected to one cathode terminal and the plate bypass capacitor to be connected to the other. The isolation of the tube input and output circuits thus obtained prevents degeneration and permits greater gain per stage. The various ratings of these pentodes mentioned may be compared with those of the broadcast radio r-f amplifier pentode type 6SK7 shown at the bottom of the chart of Figure 3. The total of the input and output capacitance of this tube, 13 $\mu\mu$fd, is considerably greater than that of any of the miniature type tubes. Also, the miniature tube transconductances are all much higher than that of the 6SK7.

The 6C4 is a miniature type triode used as a high frequency oscillator in television receivers, while the miniature type 6J6 may be operated either as an r-f amplifier, a mixer, or a high frequency oscillator. A common cathode is employed for the two sections of this tube, and when the grids are operated in push-pull and the plates in parallel, it will perform satisfactorily as a mixer at frequencies as high as 800 mc. Figure 3 shows the 6J6 to have an extremely low output capacitance of 0.4 $\mu\mu$fd.

The 7F8 and the 12AT7, 12AU7, and 6BQ7 are dual triodes with separate cathodes for each section, the 7F8 being of the glass lock-in type tube while the rest are of the miniature type. The 7F8 is used as an amplifier or as a high frequency oscillator. The 12AT7 or 12AU7 may be employed as an r-f amplifier, mixer, or oscillator and has a miniature 9 pin base with base pin No. 9 connected to the center of the heater so that the tube may be used in either a parallel or a series type heater circuit. The 6BQ7 does not have the heater center tap. Pin 9 is used for an internal shield.

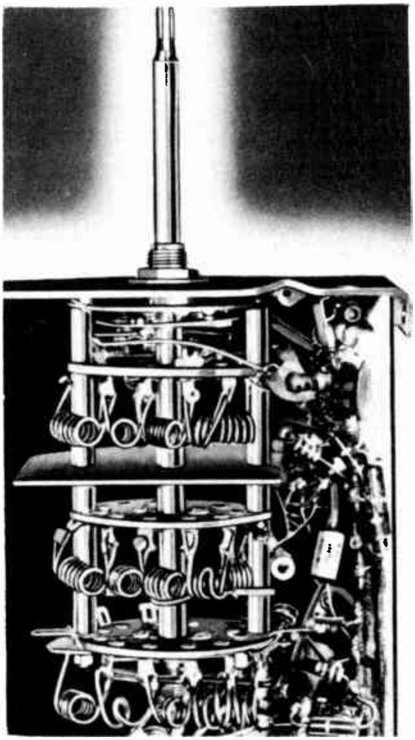

A switch type TV tuner. The coils are stationary and channels are selected by a ganged wafer type switch.

Courtesy Motorola, Inc.

This tube was designed for the cathode driven grounded grid amplifiers found in the CASCODE circuit described later in this lesson.

Although pentode type tubes are universally employed as r-f amplifiers in broadcast radio receivers, either pentode or triode r-f amplifier tubes may be found in r-f stages of television receivers. The principal advantages of a pentode are higher voltage gain and prevention of oscillation due to the shielding effect of the screen grid. However, at the high frequencies of the television carriers, and because of the wide bandpass required, the pentode amplifier in a television receiver has considerably lower voltage gain than the r-f amplifier in the broadcast radio receiver.

Furthermore, the broadcast radio signal strength is generally higher than the carrier strength of the television signal so that the signal-to-noise ratio in the input of the television receiver is of relatively greater importance. Therefore, because the noise generated in a triode tube is considerably less than that generated in a pentode tube, triodes are frequently used in the r-f stages of television receivers. However, to prevent oscillation in a triode r-f amplifier circuit, neutralization may have to be employed, but this is relatively unimportant when the improvement of the signal-to-noise ratio thus obtained is considered.

R-F TUNED CIRCUITS

Before taking up the details of the television receiver r-f section, the operation of tuned circuits is reviewed briefly. Most of these circuits are similar to that of Figure 4. Here, capacitor C is connected in parallel with the series arrangement of L and R. Actually R is not a separate unit but represents the resistance of the wire with which the coil is wound. In many applications, the impedance of this circuit is of importance and, at any frequency, is equal to:

$$Z = X_c\sqrt{\frac{R^2 + X_L^2}{R^2 + (X_L - X_c)^2}}$$

where: Z = impedance at any frequency f
$X_c = 1/(2\pi fC)$
$X_L = 2\pi fL$
R = resistance of the coil.

At the resonant frequency, $X_c = X_L$ and, if R is very small, the equation reduces to:

$$Z_r = \frac{L}{CR}$$

where: Z_r = impedance at the resonant frequency
L = inductance in henrys
C = capacitance in farads
R = resistance in ohms.

A number of conclusions may be drawn from this equation: THE IMPEDANCE OF THE TUNED CIRCUIT IS DIRECTLY PROPORTIONAL TO THE INDUCTANCE AND INVERSELY PROPORTIONAL TO THE CAPACITANCE

AND RESISTANCE; to obtain a large impedance with a given resistance, the inductance should be large and the capacitance small. With the voltage directly proportional to the impedance across which it is produced, a tuned circuit with a large inductance will develop a higher voltage than one with a large capacitance.

Selectivity is a measure of the ability of a tuned circuit to discriminate between signals of different frequencies and may be expressed in terms of circuit quality or Q. With large values of Q, the response curve is relatively sharp, the selectivity is greater, and the voltage that is developed across the circuit is large. On the other hand, with lower values of Q, the response curve is broad, the selectivity is poor, and the voltage developed across the circuit is small. Electrically speaking, circuit Q is the ratio of the total energy in the circuit to that which is dissipated and is an important factor because the dissipated energy must be re-supplied by the source. Mathematically, the Q is equal to the inductive reactance, at resonance, divided by the circuit resistance:

$$Q = \frac{X_L}{R} = \frac{2\pi f_r L}{R}$$

where: f_r = resonant frequency in cycles per second
L = inductance in henrys
R = total resistance in ohms.

Required to pass a 6 mc band of frequencies for each channel, the tuned circuits of the television receiver r-f section must have wide band characteristics and, therefore, a relatively low Q. In the case of the higher frequency television carriers, the natural Q of the tuned circuit is sufficiently low. However, for the lower frequency television carriers it is necessary to reduce the Q of the tuned circuits.

One method of obtaining the required low Q tuning circuits is to increase the resistance in such a way that the selectivity is reduced. By connecting an actual resistor in series with the coil, like R in Figure 4, the X_L to R ratio can be reduced and the Q lowered, but when this is done, the selectivity curve of the circuit, although broadened, becomes unsymmetrical, with greater response at one edge of the band than at the other.

However, by connecting the resistor in shunt with the tuned circuit, as in Figure 5, the selectivity of the circuit is broadened symmetrically, with a bandwidth inversely proportional to the resistance.

The bandwidth of a tuned circuit is commonly defined as THE RANGE OF FREQUENCIES OVER WHICH THE RESPONSE DOES NOT DECREASE BELOW SOME STATED PERCENTAGE OF THE RESONANT FREQUENCY RESPONSE. In television, this value is often taken as

70.7 percent. For the tuned circuit to have the desired bandwidth, the required shunt resistance may be calculated by means of the equation:

$$R = X_r \frac{f_r}{\Delta f}$$

where: X_r = the inductive or capacitive reactance at the resonant frequency
f_r = the resonant frequency (center frequency of the band)
Δf = bandwidth between the 70.7% points.

The arrangement of the terms in this equation shows that for a given center frequency, the wider the bandwidth the lower the required shunt resistance.

The resistance computed from this equation is the maximum impedance that the tuned circuit can have under any condition. Hence, to obtain a large voltage across the tuned circuit, R must be as large as possible. With a given ratio of f_r to Δf, the higher the reactance of X_r, the higher the resistance of R. Large values of X_r are obtained from a large inductance and a small capacitance in the tuned circuit.

In practice, the lower limit of capacitance is the circuit stray capacitance in parallel with the tube capacitance. These capacitances are usually the only ones employed in television circuits, although very small adjustable capacitors may be included for alignment purposes. The inductance is chosen to resonate with the stray and tube capacitances at the desired frequency f_r. The reactance of this inductance at the frequency f_r is the basis for the resistance of the load resistor in the above equation.

When the bandwidth, Δf, is a large percentage of the resonant frequency, the ratio $f_r/\Delta f$ becomes small and the shunt resistance also becomes small. When this is the case, most of the circuit losses are caused by R so that the effective Q is:

$$Q_e = \frac{R}{X_L} = \frac{R}{2\pi f_r L}$$

where: Q_e = the effective Q of a heavily loaded tuned circuit
R = shunt resistance in ohms
f_r = resonant frequency in cycles per second
L = inductance in henrys.

Notice that this equation is the reciprocal of the standard Q formula. It is the low shunt resistance that causes this change.

When two coupled resonant circuits are tuned to the same frequency, the resulting behavior depends largely on the degree of coupling. In Figure 6A, inductively coupled coils L_1 and L_2 are resonated to the same frequency by capacitors C_1 and C_2 respectively.

The curves of Figure 6B show the response as the degree of coupling is increased. Starting with the coils widely spaced, the coupling is small and as shown by curve a, the response is small and sharply peaked.

As the coils are brought closer together, the coupling increases and the response curve becomes larger and broader, with steeper sides, until the secondary voltage reaches a maximum. This condition is known as critical coupling and its curve is shown by b. A further increase in coupling causes the response to take on a double humped appearance as shown by curve c. As the coupling is increased still further, the response humps become more pronounced and spread farther apart.

This method of obtaining a response bandwidth sufficiently wide to provide uniform amplification of the two television carriers and their sidebands often is employed in television receiver r-f and i-f circuits.

R-F AMPLIFIERS

As in the case of broadcast receivers, not all television receivers employ an r-f amplifier before the mixer. However, there are several advantages to be gained by using such a stage.

The receiver selectivity is increased by the r-f amplifier tuned circuits. This results in a greater reduction of unwanted signals, especially those of the image frequencies.

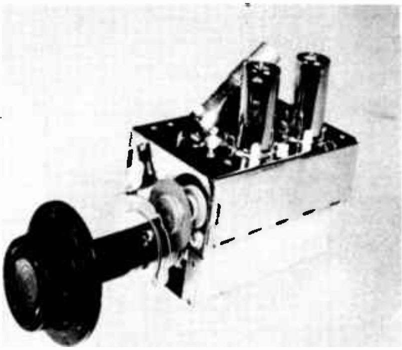

Known as the "inputuner," this unit provides continuous tuning over the VHF TV, and FM Channels.
Courtesy Allen B. DuMont Labs., Inc.

The image frequency is equal to that of the desired carrier plus twice the intermediate frequency, assuming the oscillator frequency is higher than that of the desired signal. If this signal reaches the mixer, it will combine with the locally generated r-f signal to produce a difference frequency that is exactly equal to the intermediate frequency and so appear in the receiver output along with the desired program.

The signal-to-noise ratio is improved. Any noise generated in the first tube receives the same amplification as the received signal. However, any noise generated in the later stages receives less total amplification and generally is relatively weak compared to the signal. Therefore, the maximum signal-to-noise ratio of the receiver is determined largely by the noise generated in the first tube. In general, more noise is produced in a mixer than in an r-f stage. Thus, with the same signal strength at the input, a receiver with an r-f amplifier has a higher signal-to-noise ratio than one that does not.

The r-f stage also serves as a buffer between the local oscillator and the antenna and decreases the possibility of a signal leak through to the antenna. Such signals are radiated by the antenna to cause interference with other receivers in the vicinity.

Generally, the sound and picture signals are not separated before the i-f's are obtained. Therefore, it is necessary that the r-f amplifier and mixer tuned circuits have a bandwidth sufficient to pass the complete television channel of 6 mc.

The Input Circuit

The television receiver input circuit couples the transmission line to the first tube in the receiver and is designed so that at the receiver antenna terminals a nearly constant impedance is provided for all channels. This stability is necessary in order to match the receiver to the antenna system for all channels. Otherwise reflections interfere with the signal and cause duplicate images or ghosts in the reproduced picture. The common input impedances are 300 and 73 ohms, although other values are employed occasionally.

One of the simplest input coupling circuits is shown in Figure 7A and consists of a single tuned transformer L_1L_2, the untuned primary of which is connected to the transmission line and the tuned secondary connected to the V_1 grid circuit. Capacitor C_1 represents the total stray and tube input capacitances as well as that of a tuning capacitor, if one is employed. As in any resonant circuit, L or C is varied to tune the circuit to the desired frequencies.

Either one or both may be a pre-set unit which may be switched into the circuit as desired, or one may be variable for continuous tuning.

There are several general requirements for maximum transfer of signal energy from the transmission line to the receiver. If reflections are to be avoided, the primary impedance must match that of the transmission line. When the primary inductance is small in comparison to that of the tuned secondary, as is usually the case, the effective primary impedance is:

$$Z_p = \frac{(2\pi f_r M)^2}{Z_s}$$

where: Z_p = effective primary impedance

f_r = resonant frequency of the secondary
M = mutual inductance between the primary and secondary
Z_s = secondary impedance.

The secondary circuit is a resonant network, the impedance of which varies with frequency. In order to maintain adequate sensitivity, the circuit constants should be chosen so that the impedance does not fall below about 70.7% of the maximum over the range of frequencies occupied by the carriers and sidebands of the desired television station. Usually the losses in the circuit are sufficient to reduce the Q so that the desired response characteristics are obtained but, if not, additional resistance may be connected across the secondary as described for Figure 5.

The primary should have fewer turns than the secondary so as to provide a signal voltage step-up. The voltage transfer between the primary and secondary is related to the circuit constants and frequency bandwidths as follows:

$$T = \frac{1}{\sqrt{2\pi \Delta f C}}$$

where: T = voltage transfer
Δf = frequency bandwidth in cycles per second
C = total capacitance in farads shunted across L_2.

This equation shows that the maximum voltage transfer which can be obtained for a given frequency bandwidth is limited by the shunt capacitance C. Thus, the tuned circuit, L_2C_1, should have a high L to C ratio so that the highest possible voltage transfer takes place.

The turret tuner is disassembled to show circuit wiring and method of connecting the tuning strips.
Courtesy Standard Coil Products Co.

Referring to Figure 7A, the primary of the input transformer has a grounded centertap to balance the transmission line to ground and cause cancellation of any noise voltages that may be induced on it. Because the two wires of the line are close together, noise signals tend to induce equal voltages in the wires. The resulting currents in each half of the primary are equal and their effects cancel each other so that no noise signal is coupled to the V_1 grid.

On the other hand, the television signal induces an antenna voltage that causes current from one end of the primary to the other, with little or no signal currents leaving at the centertap. Therefore, the grounded primary centertap does not cause any signal cancellation. At this point, it might be well to point out that noise signals which are induced on the antenna itself are not cancelled by grounding the primary centertap. Noise induced on the antenna may be removed only by relocating the antenna.

In the circuit of 7B, greater gain and bandwidth are obtained without resistance loading by placing the tuned link, L_2C_1, between the input transformer primary, L_1 and secondary, L_3. As explained for Figure 6, when two coupled resonant circuits are tuned to the same frequency, the resulting behavior depends largely on the degree of coupling. The transformer primary, L_1, is connected to the transmission line and is inductively coupled to L_2, the degree of coupling determining the primary impedance. With the L_1 centertap grounded, the transmission line is balanced to ground and all interfering signals that are induced on the line will cancel each other so that none appear at the V_1 grid.

Resonant circuits L_2C_1 and L_3C_2 are tuned to the same frequency and the coupling between them is adjusted until the desired response characteristics are obtained. In practice when this type of input is used, the circuits usually are arranged so that different sets of coils and capacitors are switched into the active position for each channel.

Because of the effect of frequency on transformer coupling, the signal energy transferred from the primary to the secondary varies with frequency. Although the energy transfer can be improved by a careful selection of the resonant qualities of the antenna system and permitting an impedance mismatch to the transmission line at some frequencies, the variation of energy transfer is a limitation to the usefulness of the circuit. In an effort to overcome some of the limitations of transformer coupling, several manufacturers have resorted to an untuned r-f input stage, and have employed band filter techniques to obtain proper impedance matching.

Figure 7C shows a very simple untuned input circuit. Here, a 73 ohm co-axial transmission line is used to connect the antenna to the input circuit. At the receiver, the transmission line outer shield is grounded to the chassis and the inner conductor is capacitively coupled to the cathode circuit of a triode type tube V_1, the control grid of which is grounded. Known variously as a grounded grid amplifier, a cathode input amplifier or an inverted amplifier, this arrangement permits a triode type tube to be employed for improved signal-to-noise ratio while removing the necessity for neutralization.

In a conventional triode r-f amplifier circuit, feedback takes place through the grid-plate capacitance and the resulting oscillation may be stopped only by neutralizing the stage, usually by an adjustable, external capacitor. On the other hand, by grounding the grid and applying the signal to the cathode circuit, the capacitive current through the grid-plate capacitance does not enter the input circuit. Thus, feedback is avoided and oscillation does not take place.

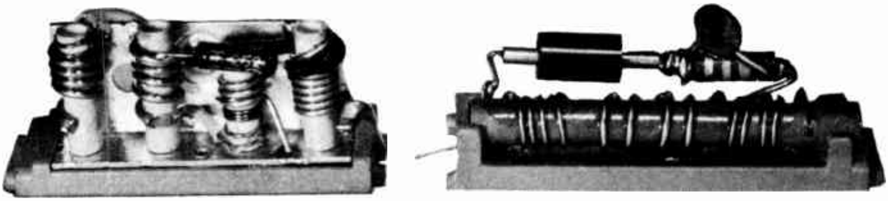

UHF tuning strips. The preselectors, crystal mixer, i-f output transformer, and harmonic selector are mounted on the strip at left. The harmonic generator, bias network, and the VHF mixer and oscillator tuning coils are shown on the strip at right.

D.T.I. Photo

With the control grid connected directly to ground and the signal applied between the cathode and ground, the signal variations cause corresponding changes in the grid-cathode potential. This has the same effect as the signal applied to the grid of a conventional amplifier stage. An advantage of the grounded grid amplifier is that the cathode impedance is comparatively low and usually loads any tuned circuit sufficiently to provide an adequately flat response over the entire television band.

Because the cathode circuit is not bypassed to ground, considerable degeneration occurs and the stage has less gain than a conventional stage employing the same tube.

In Figure 7C, the r-f signals are capacitively coupled to the V_1 cathode and are superimposed on the average d-c bias voltage developed across R_1. The instantaneous grid-cathode voltage variations are amplified by the tube, appear in the plate circuit and are supplied to the mixer. The resistance of R_1 and the V_1 operating voltages are so chosen that the V_1 cathode circuit presents a constant impedance of 73 ohms to the transmission line to prevent reflections.

With the transmission line outer shield grounded and the inner conductor coupled to the V_1 cathode, the transmission line is unbalanced to ground. However, noise pickup by the transmission line is prevented by the grounded outer shield.

Since all of the voltages induced on the antenna are coupled to the V_1 cathode circuit, interference may be caused by lower frequency signals. To remove these undesired signals, a high-pass r-f filter such as L_1 and C_1 in Figure 7D may be employed between the transmission line and the first tube.

At the lower frequencies, the inductive reactance of L_1 is comparatively low and provides an easy path to ground for the signals. At the same time, the capacitive reactance of C_1 is comparatively high and effectively blocks the signal from the V_1 cathode. For high frequency signals, the reactance of L_1 is high, the reactance of C_1 is low and the signal passes readily to the V_1 cathode. As in Figure 7C, the input of this circuit is unbalanced to ground and is designed to match the impedance of a 73 ohm co-axial transmission line.

The grounded grid amplifier circuits of Figures 7C and D are designed to match a 73 ohm co-axial transmission line and are unbalanced to ground. However, with folded dipole antennas and 300 ohm twin-lead transmission lines becoming more popular, a method of coupling the 300 ohm line to the receiver, while retaining the advantages of grounded grid operation of the amplifier tube and balanced input, had to be devised. One circuit that performs this function is shown in Figure 7E.

To obtain a balanced 300 ohm input, the transmission line is connected between the grid and cathode sections of V_1 so that both serve as signal input electrodes. The resistance of bias resistor R_4 and the V_1 operating voltages are chosen so that the cathode circuit presents an impedance of 300 ohms. To maintain a constant d-c bias voltage, capacitor C_3 is connected across R_4. The grid circuit impedance is made equal to 300 ohms by shunting its input with R_3.

With the grid and cathode circuit impedances in series, the total impedance presented by V_1 is 600 ohms. Choke coil L_1 is connected across the V_1 input to reduce the impedance to the desired 300 ohms. The grounded centertap on L_1 provides a path to ground for the noise signals as well as the V_1 cathode current and thus balances the input.

The inductance of L_1 is chosen to resonate broadly with the grid and cathode capacitances so as to provide uniform impedance for all the lower television channels. When tuning to the higher channels, switches S_1 and S_2 close automatically to shunt L_2 and L_3 across L_1 so as to provide uniform impedance for these channels.

In series with the transmission line, capacitors C_1 and C_2 form high-pass filters with L_1, L_2 and L_3

to remove any low frequency interference. As a safety measure to drain static charges from the antenna, resistors R_1 and R_2 are connected in parallel with C_1 and C_2 respectively. Very high resistances are employed so that they have little effect on the operation of the filter.

The circuits of Figures 7C, D, and E have the transmission line capacitively coupled to the tube input and there is no voltage step-up between the line and tube. By employing a transformer, similar to that of Figure 7A, in the cathode circuit of a grounded grid amplifier, additional output may be obtained from the stage. In Figure 7F, L_1 and L_2 constitute the step-up transformer, C_1 represents the total of the stray and tube capacitances as well as that of any tuning capacitor that may be employed, C_2 is the cathode bypass capacitor and R_1 is the cathode bias resistor. The primary centertap is grounded to balance the input and remove any noise signals that may be induced on the transmission line. The secondary circuit is designed to be broadly resonant so that a uniform impedance is presented to the transmission line.

In operation, the r-f voltage that is developed across L_2 is in series with the d-c bias voltage produced across R_1 and causes instantaneous changes in the V_1 grid-cathode voltage. These changes are amplified by the tube, appear in the plate circuit and are applied to the mixer.

THE MIXER

In superheterodyne television receivers, the mixer is employed to change the high frequencies of the video and sound carriers simultaneously to lower, intermediate frequencies where higher gain, selectivity, and circuit stability are more easily obtained. The mixer input is connected to the r-f amplifier through an interstage coupling circuit or, if no r-f amplifier is used, it may be connected to the transmission line through a suitable input circuit which usually is of the type illustrated in Figures 7A or 7B.

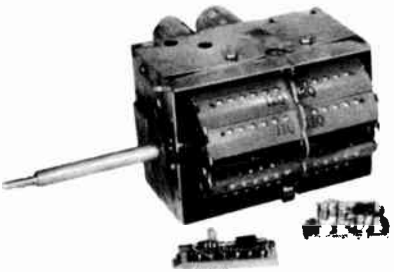

The bottom view of the turret tuner showing tuner strips used for UHF reception.

Courtesy Standord Coil Products Co.

The mixer input signals consist of the video and sound carriers and a locally generated oscillator signal. As a result of the heterodyning of these three signals, the mixer output contains a relatively large number of frequencies, two of which are used as the intermediate frequencies while the rest are rejected by the i-f amplifier tuned circuits. The difference frequency between the video carrier and the oscillator frequency is the video intermediate frequency, while the difference frequency between the sound carrier and the oscillator frequency is the sound intermediate frequency.

Because of several design considerations, the receiver high-frequency oscillator is generally operated at a frequency that is higher than those of the two carriers, although occasionally it may be lower. Thus, when the two carriers are heterodyned with an oscillator signal, the frequency of which is higher than that of either carrier, the higher frequency sound carrier produces the lower intermediate frequency while the lower frequency video carrier produces the higher video intermediate frequency. Since the same oscillator signal is used in both cases, the frequency separation between the two i-f's is the same as that between the two carriers, which is standardized at 4.5 mc.

A channel 3 station has a video carrier of 61.25 mc and a sound carrier of 65.75 mc. When the local oscillator of a receiver tuned to this channel has a frequency of 87 mc the i-f may be found by:

Video i-f $= 87 - 61.25 = 25.75$ mc.
Sound i-f $= 87 - 65.75 = 21.25$ mc.

Notice that the video i-f is higher than the sound when the oscillator operates above the incoming frequency and there is always a difference of 4.5 mc between them.

In a large portion of the television receivers, separate tubes are used for the mixer and local oscillator, as the combination tubes that are available generally are not satisfactory. These tubes do not have high enough conversion gain and do not oscillate readily over the wide range of frequencies that must be covered. Usually the incoming television signals and the oscillator output are applied to the mixer tube control grid, this arrangement providing greater gain and less noise than when the oscillator output is applied to some other element of the tube. Depending on circuit design, either triode or pentode tubes may be used in the mixer stage. Grid leak or cathode bias may be employed, the tube operating in practically the same manner as a plate detector.

Coupling Circuits

In Figure 8A, the r-f amplifier tube, V_1, is coupled to the mixer tube, V_2, through a single-tuned transformer L_1, L_2, and C_1. This circuit is tuned to the same frequency as the r-f amplifier input and the tuning or switching considerations for that circuit also will apply to this coupling circuit. As for the input circuit, the bandwidth of the coupling circuit must be sufficiently broad to provide uniform amplification of the two carriers and their sidebands. Generally the circuit losses are sufficient to lower the Q to that necessary for the desired bandwidth, but if not, additional resistance may be connected across the secondary as described for Figure 5.

The gain of an amplifier stage depends largely upon the plate load impedance and, with the primary L_1, untuned, the V_1 load impedance is comparatively small. To increase the load impedance, a double-tuned transformer may be used as shown in Figure 8B. Here both the primary and secondary are tuned to the same frequency, the load impedance is higher than in Figure 8A and a higher gain may be obtained from the r-f amplifier stage.

Given by $Z_r = L/CR$, the LC circuit resonant frequency impedance is directly proportional to the inductance and inversely proportional to the capacitance and resistance. Therefore, for high gain, the tuned circuit inductance to capacitance ratio should be large. To obtain a large L to C ratio, many television r-f coupling circuits are designed so that the inductance is resonated by the interelectrode capacitance of the tubes, the circuit stray capacitances, and the distributed capacitance of the coil. A small adjustable capacitor may be included for slight adjustment of the circuit resonant frequency. This total constitutes the absolute minimum capacitance shunting the tuned circuits.

Thus, although shown as capacitors in Figure 8B, C_1 may represent the V_1 output capacitance plus the stray capacitance in the V_1 plate circuit plus the distributed capacitance of L_1, while C_2 may represent the V_2 input capacitance, the stray in the V_2 grid circuit and the distributed capacitance of L_2. Because of the importance of stray capacitance as well as stray inductive coupling in such circuits, all parts should be positioned carefully and leads kept short and direct.

To obtain sufficient bandwidth, the coupling between primary L_1 and secondary L_2 may be increased beyond the critical point until the response is double-humped as shown by curve c of Figure 6.

An important modification of the circuit in Figure 8B is shown in Figure 8C. Here L_1 and L_2 function as a double-tuned transformer, the primary and secondary of which are tuned by C_o and C_I respectively. In series between the V_1 plate and L_1, capacitor C_b, isolates L_1 from the V_1 d-c plate voltage, thus removing the high voltage from any coil switching arrangement that might be employed. V_1 plate voltage is applied through R. At the radio frequencies, the reactance of C_t is very low and R is effectively in parallel with the tuned circuit L_1C_o, hence this circuit represents a combination of resistance loading and overcoupling.

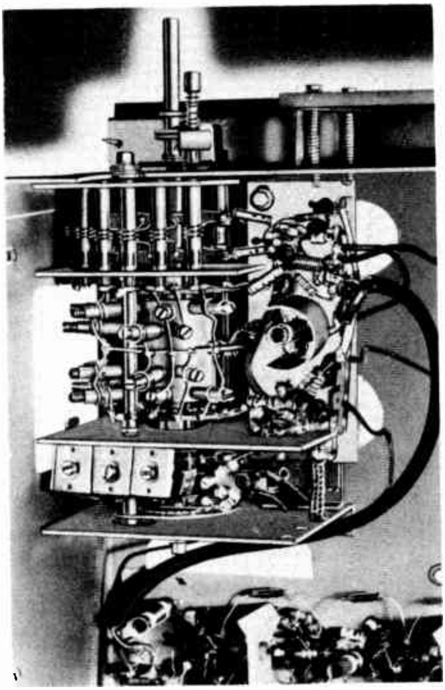

The under chassis view of a switch type tuner employing iron core tuning for the coils. Note the tuner output is applied through a shielded cable to the i-f amplifiers.

Courtesy Motorola, Inc.

HIGH FREQUENCY OSCILLATORS

The high frequency oscillator must supply sufficient r-f voltage to the mixer to produce a strong i-f output and, in addition, the oscillator circuit should be as stable as possible with respect to supply voltage and temperature changes. In general, the merit of any tube is the ratio of its mutual conductance to the sum of its capacitances. Since the grid-to-plate capacitance C_{gp} need not be considered in oscillator circuits, the triode type tube usually exhibits the best figures in this respect and is commonly employed in television receiver oscillator circuits.

Oscillator tuning is extremely critical because the accompanying sound i-f must fall within the pass band of the sound i-f amplifier and the associated and adjacent channel sound i-f's must fall accurately on the rejection frequencies of any trap circuits that may be employed in the video i-f amplifier. As a rule the sound channel can pass the sound signal within the range of plus or minus 100 kc.

Taking an oscillator frequency of 100 mc as an example, the maximum allowable drift is .1 mc, or a change of .1 per cent. Since adjustment of the oscillator frequency to this degree of accuracy is difficult to maintain, it is customary to employ a small variable capacitor as a fine tuning control for the oscillator tuned circuit. This control is usually brought out to the front panel and is adjusted by the viewer to get the oscillator precisely to the correct frequency for each selected channel.

VHF TUNERS

Because of the wide range of frequencies that must be covered, television receivers require more elaborate tuning systems than do broadcast radio receivers. Electrically, tuning in any receiver is accomplished by varying the capacitance, the inductance, or both in the r-f, mixer, and oscillator tuned circuits. Mechanically, the station-to-station and band-to-band selection may be accomplished by some switching arrangement that places different coils or capacitors into the circuits for each channel or by means of a continuous tuning arrangement whereby the inductance or capacitance is varied gradually throughout its range.

Cascode Tuner

The cascode television tuner illustrates several of the features already described in this lesson. Employing the circuit shown in Figure 9, this tuner is a two tube, turret type unit in which V_1V_2 is a type 6BQ7 miniature dual triode r-f amplifier and V_3 is a type 6J6 miniature dual triode. One section of V_3 is used as the mixer and the other as the oscillator.

For tuning from channel to channel, the tuning coils L_1, L_2, L_3, L_4, and L_5 are changed by means of a twelve-position turret that carries twelve sets of antenna r-f snap-in coils and twelve sets of mixer-oscillator snap-in coils. Each set of coils is built as an assembly that may be removed easily for repair or replacement. In the Figure, L_1 and L_2 represent one of the antenna r-f coil assemblies, and L_3, L_4, and L_5 represent one of the mixer-oscillator coil assemblies.

Although the individual coils have different inductances to correspond to the different channel frequencies, each of the twelve sets have the same connections to their respective circuits. Therefore, Figure 9 shows the coils of only one channel. When the turret is rotated the coils shown inside the broken line rectangles are replaced by a new set for each channel.

Physically, when the coil assemblies are in place, the turret has the form of a twelve-sided drum which may be rotated by the station selecting knob so that, for the desired channel, the appropriate coils are brought into contact with a set of stationary contacts which provide connections to the antenna, r-f amplifier, mixer, and oscillator circuits. Due to careful design, the turret mounting provides low stray capacitance and inductance because of the short connections that are provided.

By means of a 300 ohm transmission line, the signal is coupled from the antenna to the V_1 grid by single tuned transformer L_1L_2, the primary of which is centertapped and grounded to balance the input. The transformer secondary, L_2, is resonated by the tube input and the circuit stray capacitances, and loaded by R_8 to broaden its response as described for Figure 5. The V_1 bias voltage is obtained from an automatic gain control agc circuit and applied through R_9 to the low end of L_2.

Tubes V_1 and V_2 are connected as a cascode coupled r-f amplifier. Triode V_1 must be neutralized, and capacitor C_9, connected from the plate to the low end of L_2, provides the neutralization. Tube V_2 is operated as a grounded grid amplifier. The grid of V_2 is effectively at zero potential with respect to the cathode by applying a positive voltage from the voltage divider R_1, R_2, and R_5. The filter R_3C_1 prevents signal variation in the grid of V_2.

Although the cascode amplifier has low gain, it is used because of the very low noise characteristics. The signal is direct coupled from the plate of V_1 to the cathode of V_2, and the required bandwidth is provided by the cascode amplifier input and output circuits.

The coupling between the V_2 plate and the grid of the mixer section of V_3 is by means of a double tuned transformer L_3L_4. The primary L_3, is tuned by the V_2 output capacitance, the circuit stray capacitance and the capacitance of C_3 to obtain the desired response characteristics. L_4 is tuned by the mixer input capacitance plus the circuit stray capacitance and that of C_6 and loaded by series connected R_4 and R_6. Thus, this coupling circuit is a combination of the resistance loading and overcoupling methods of obtaining wideband frequency response.

Capacitor C_5 isolates the tube grid circuit from the low resistance coil and permits grid leak bias to be developed across R_4 and R_6. The mixer i-f output is applied through the coupling capacitor C_{18} to the grid of the i-f amplifier stage. Connected between the mixer plate and ground, bypass capacitor C_7 provides an easy path to ground for the carrier and high frequencies in the mixer output. Mixer plate voltage is applied through L_9, L_{11}, and L_{10}.

Inductively coupled to L_4, oscillator coil L_5 is tuned by C_8 and the FINE TUNING capacitor. Physically, the fine tuning capacitor is composed of two stationary metal plates. One plate is a small metal disc mounted on, but insulated from, the metal subchassis on which the entire tuner is assembled. The other capacitor plate is a small rectangular metal bracket that is mounted on the front of the subchassis so that it is close to, but separated from the disc. Located between the two metal plates, the rotor consists of a fibre disc of constantly changing radius which moves in or out, thus changing the dielectric material between the plates and capacitance of the capacitor. Adjustable from the front panel by screwdriver, small brass screws are partially inserted into each oscillator coil to provide an adjustment of the oscillator coil inductance so that the frequency may be set to the correct value for each channel.

L_6C_2 and L_8C_{21} are filters in the heater circuits of V_1V_2 and V_3 respectively to keep r-f on the heaters from the other tubes in the receiver.

Switch Type Tuner

Employing pre-tuned wide-band transformers for each VHF channel, the switch type tuner used in the television receiver is shown schematically in Figure 10A. Here, each of the transformers, T_2 to T_{10}, couples the output from r-f amplifier V_1 to the grid circuit of the mixer, V_2.

To show the electric circuit for a particular channel, the connections to transformer T_6 are drawn in the conventional manner in Figure 10B. As indicated here, the transformer primary and secondary are magnetically coupled, but are isolated from the d-c circuits by blocking capacitors C_3 and C_9. The V_1 plate connects to B+ through $R_{2,3}$ which represents the total resistance of resistors R_2 and R_3 of Figure 10A.

The primary and secondary windings of each transformer are self-tuned by the distributed and tube capacitances to provide high L-to-C ratio and, therefore, higher stage gain. Trimmer capacitor C_4 is shunted across the primary and C_{12} across the secondary of each transformer to permit compensation for differences of tube capacitances when tube replacement is necessary.

On channel 2, coupling transformer T_2 is triple tuned for better attenuation of the image frequencies in the 88 to 108 mc FM broadcast band. Tuned line $L_5L_6C_{15}$ is inductively coupled to the T_2 primary and secondary and tuned to the correct frequency by adjustable cores in L_5 and L_6. When properly tuned, the coupling circuit provides a response of the required bandwidth with comparatively steep sides as described for Figure 7B.

The tubes employed are a triode connected pentode type 6AU6 r-f amplifier, V_1, and a double triode type 12AT7, one section of which is used as the mixer V_2 and the other as the high frequency oscillator V_3. Its suppressor and screen grids connected to the plate, the 6AU6 operates as a triode in a grounded grid r-f amplifier circuit. The purpose of this arrangement is twofold: it improves the signal-to-noise ratio and removes the necessity of neutralizing the amplifier stage. Although the noise output of a pentode is very high, when the tube is operated as a triode by connecting the screen and suppressor grids to the plate, it exhibits the noise characteristics of a triode while retaining a high transconductance.

To provide a practically constant impedance to the antenna transmission line at all frequencies, the line is connected through transformer T_1 into the V_1 cathode circuit. This arrangement permits optimum transfer of signal from antenna to r-f amplifier for all 12 channels and matches the receiver to the transmission line. As shown, the T_1 primary is balanced to ground, thereby providing cancellation of noise energy picked up by the transmission line. To prevent noise being capacitively coupled from primary to secondary, an electrostatic shield, shown dotted, is incorporated between the windings of this transformer.

R_1 serves as the V_1 cathode bias resistor and is bypassed by capacitor C_2. Coil L_2 is in series with V_1 to prevent the cathode circuit impedance from being lowered by the shunting effect of C_2. When the station selector switch is set for any of the seven higher VHF channels, coil L_3 is connected in parallel with L_2 to reduce the total inductance in the cathode circuit. Tuned by the circuit stray capacitances, peaking coil L_1 is employed to minimize the loss of signal strength at the higher television frequencies. C_1 is a d-c blocking capacitor that prevents the bias voltage from being shorted to ground through L_1 and the T_1 secondary.

From the V_1 plate, signal variations are coupled through capacitor C_3 to the primary of the selected transformer. Three of the r-f transformers, T_8, T_9, and T_{10}, cover the upper 6 channels, each being designed with sufficiently broad bandwidth to accept two channels. From the secondary of the selected transformer, the signal is coupled through C_9 to the grid of mixer tube V_2.

A large amplitude signal from the local oscillator is coupled through C_{10} to the V_2 grid circuit so that grid leak bias is developed across R_6. In the V_2 plate circuit, the upper portion of T_{11} forms the primary of the first i-f transformer and the lower portion, the secondary, with the center tap effectively grounded for the i-f frequency through capacitor C_{14}. Resistor R_7 is connected across the T_{11} primary to provide the necessary bandwidth for the i-f response.

The V_3 circuit operates as a modified Colpitts oscillator with the tapped capacitance formed by capacitor C_6 and the plate-to-cathode capacitance C_p, indicated by dotted lines. The tube plate is grounded for r-f by capacitor C_5 and choke L_4 maintains the cathode above ground for r-f voltages while providing a path to ground for the d-c plate current.

The oscillator section of the station selector switch is ganged to the r-f amplifier and mixer sections and operates to provide a different oscillator coil for each of the six channels, 2 to 7 inclusive. Coil L_{13} is used for channels 8 and 9, L_{14} for channels 10 and 11, and L_{15} for channels 12 and 13.

Variable capacitor C_8 is the fine tuning control and serves to tune the oscillator to the correct frequency for the selected channel. In the case of channels 8 to 13, C_8 tunes the oscillator for one or the other of the two channels covered by each coil.

Continuous Tuner

Developed for television receivers, a unit called the INDUCTUNER employs continuously variable inductance tuning. This is accomplished by a variable inductor with sufficient range to tune continuously over the frequency band of 44 to 216 mc, thereby including all 12 VHF television channels.

One form of Inductuner employs three such coils, all three being mounted on a single ceramic shaft and tunable continuously for ten turns of the shaft over an inductance range of from .02 to 1.0 microhenry. A sliding contact moves along each coil shorting out the unused turns so as to raise their natural resonant frequency to a value far above the operating range of the tuner circuits.

The schematic diagram of a television receiver input section that employs this type of tuner is shown in Figure 11 where the three ganged sections of the inductuner are enclosed by dashed lines. Like most tuners, the unit is constructed on a separate subchassis and contains three tubes: a dual triode type 6J6, V_1, the sections of which are operated in parallel as a grounded grid amplifier; a pentode type 6AK5 mixer, V_2; and another 6J6, one section of which is used as the oscillator, V_3.

The UHF tuner, continuously tunable from Channel 14 through Channel 83, is designed as a separate unit to provide UHF reception with existing VHF receivers.

Courtesy Electro-Voice, Inc.

The r-f signal is fed into the V_1 cathode circuit which is designed to match the impedance of the 73 ohm co-axial transmission line. The r-f amplifier is coupled to the mixer grid through a double tuned circuit that employs two sections of the inductuner. Coils L_1, L_{2A}, L_{2B}, and L_3 are tuned by the shunting capacitances due to the V_1 output capacitance, the V_2 input capacitance and the coupling capacitors C_5, C_6, and C_7. Coils L_1 and L_3 provide the minimum inductance for the high frequency end of the television band.

D-C blocking capacitors C_4 and C_8 are employed to permit isolating the inductuner from the V_1 d-c plate voltage and to permit the use of grid leak bias on V_2 while shunting L_3 and L_{2B} with a comparatively small value of resistance at R_4. Resistors R_2, R_3, R_4, and R_5 load the tuned circuits to provide the desired bandwidth. For proper adjustment of alignment, capacitors C_5 and C_6 are variable.

The oscillator circuit is a modified Colpitts and uses one-half of a 6J6, V_3. The oscillation frequency is determined by the resonant frequency of the tank circuit C_{11}, L_4, L_5, and L_{2C}, which is the third section of the inductuner. Coil L_5 provides the minimum inductance in series with the inductuner at the high end of the television band while L_4 and C_{11} provide for the proper oscillator tracking. Oscillator grid leak bias is developed by C_{12} and R_9 and the oscillator signal is coupled to the mixer grid through C_{13}. To prevent r-f on the tube heaters from reaching other tubes in the receiver, the heaters are bypassed by C_2, C_9, and C_{15}. The i-f output from the mixer is applied to the i-f amplifier for further amplification.

UHF CONVERTERS

To provide for reception of UHF stations requires the extension of VHF receiver tuning range. The present trend is to retain the stable VHF receivers now in use, and by changing the circuits to a double conversion superheterodyne, extend its tuning range to include some or all of the 70 UHF channels.

Two methods are now being used to receive UHF stations on existing VHF receivers. One method is to replace an unused tuner strip with a special UHF tuner strip. The other system is a converter built either in a separate cabinet or as an integral part of the VHF tuner and used ahead of the regular VHF receiver circuits.

The purpose of the converter is to reduce the frequency of the desired UHF carrier to that of an unused VHF channel. At this lower carrier frequency, the program is reproduced by the normal operation of the VHF receiver. To provide this conversion, the UHF carrier and the output of a high frequency oscillator heterodyne in a crystal mixer, the output of which is carried by a tuned, low noise, low gain amplifier. The converter action is the same as that of the VHF tuner except that the frequency of its output is a lower band VHF channel instead of the i-f.

Figure 12 shows the block diagram of a UHF converter designed for use with any VHF receiver. Located between the converter and receiver, switch SW provides a means of selecting the desired VHF or UHF reception. To provide for reception of UHF stations, the converter is connected to the receiver as shown in the diagram.

To prevent VHF interference, the input block is a high pass filter. This filter cuts off at about 300 to 400 mc, passing all signals above and attenuating all below the cutoff frequency. Tuned to the desired carrier, the r-f preselector output is applied to the mixer.

The output of the preselector and local oscillator are heterodyned in the crystal mixer to reduce the frequency of the UHF carrier to that of an unused VHF channel. Amplified by low noise, low gain i-f's, the converter output is carried through a short length transmission line to the VHF receiver tuner. At this lower VHF carrier frequency, the program is reproduced by the normal operation of the VHF receiver.

The converter unit usually contains a separate power supply to simplify installation. These power supplies may use tubes or selenium connected as full or half wave rectifiers and B+ filtering is obtained by conventional RC networks.

Continuous Tuning

The continuously tunable UHF converter may be included as an integral part of a television receiver through the use of individual VHF and UHF tuners. To facilitate and simplify operation, in some receivers the two tuners are ganged together by a pulley arrangement. This provides tuning both the VHF and UHF units with common front panel controls. However, for existing VHF receivers, this converter may be constructed as a separate unit housed in a separate cabinet, and therefore, provided with separate controls.

The schematic diagram of a tuner converter, which may be used as an integral part of the receiver or as a separate unit, is shown in Figure 13. Tuning is provided by a three section concentric line the inductance of which is changed by sliding contacts which short out a part of the line. Mixing is provided by a crystal diode operating with a UHF oscillator. An i-f amplifier is used to compensate for the mixer conversion losses and the absence of an r-f amplifier. A cascode-coupled i-f circuit is used because of its low noise characteristics.

From the UHF antenna, the signal is applied to the tuner through a high pass filter. This filter reduces interference caused by VHF television stations. The signal is then developed across coils L_1 and L_2, the junction of which is grounded to balance the input. Coupled by C_1 and C_2, the signal then is applied to the preselectors.

Preselector L_4, tuned by L_3, C_3, and C_4, and preselector L_5 tuned by L_7, C_7, and C_6 provide a maximum selectivity consistent with the required bandwidth. Resistors R_1 and R_2 provide a path to ground for any static voltages developed across the shorted portion of the preselectors.

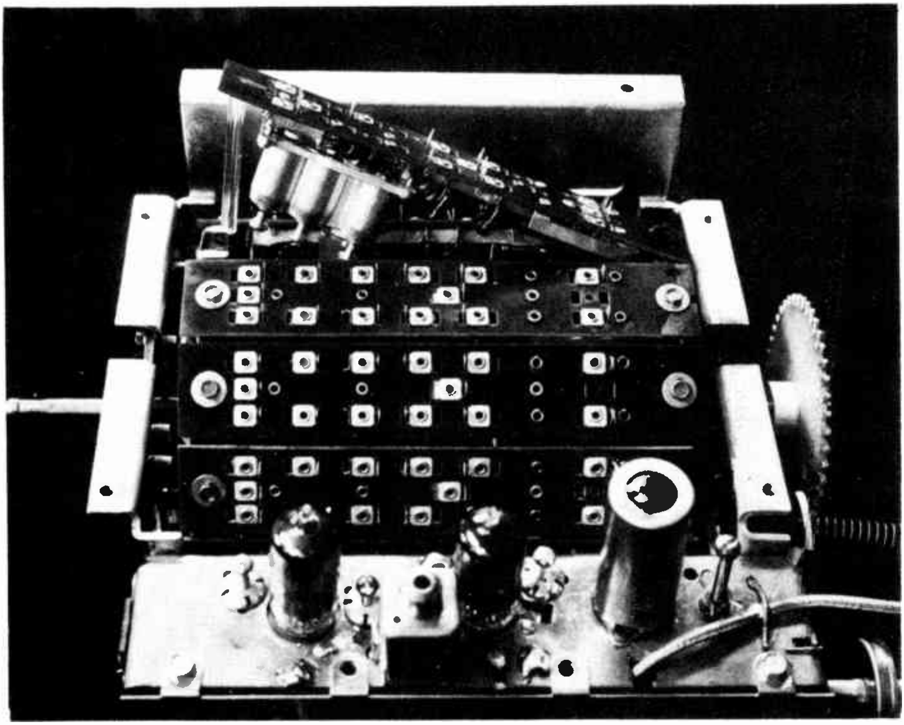

Turret tuner with the UHF tuning strip partially in place. Note the UHF converter circuit is mounted on a single strip.

Courtesy Zenith Radio Corp.

From the preselectors, the signal is coupled through C_8 to the mixer D_1. Also coupled to the mixer is a signal from the oscillator. The i-f output of the mixer is coupled through low pass filter L_9C_{10} to the grid coil L_{14} of tube V_2. Tube V_2 is a conventional triode amplifier which requires neutralization. This neutralization is provided by C_{16} and L_{13}. The output of V_2 is directly coupled to the cathode of V_3 which operates as a grounded grid amplifier.

The V_3 output is coupled by transformer T_1 to the VHF tuner. The T_1 secondary is loaded by R_{10} to provide the required bandwidth and is balanced to prevent noise pickup. A 300 ohm output impedance is provided to match the UHF tuner to the VHF tuner.

The triode V_1 is the UHF oscillator which is tuned by the concentric line section L_6, coil L_{10}, and capacitors C_{11} and C_{12}. Due to the low injection voltage requirements of the crystal mixer, the coupling between the mixer and oscillator is the interelectrode capacity between cathode and filament of V_1 and capacitor C_{13}. The oscillator operates on the low side of the carrier frequency to retain the proper frequency positions for the picture and sound carriers.

Filament voltages are applied through L_{17}, L_{18}, L_{16}, and L_{15} which together with C_{23} and C_{24} provide decoupling of r-f voltages. Decoupling in the V_1 and V_2V_3 B+ circuit is provided by R_4C_{15} and R_7C_{19}, respectively.

Turret Strips

A great many VHF television receivers now in use are equipped with a 12 channel turret tuner, similar to that shown in Figure 9. Two easily replaced strips carry the coils for each channel, the circuit connections being made by a series of contacts on the outer surface of each strip. New strips are now available to convert this tuner for UHF reception.

The block diagram of the two section UHF tuner strip for use in a turret-type tuner is shown in Figure 14. These strips are used in place of unused VHF strips to provide a dual conversion of the desired carrier.

The desired UHF is selected from the antenna by the preselector block and applied to the UHF mixer. To provide heterodyne action in this mixer, the output of the tuner oscillator is coupled to a harmonic generator. The desired harmonic is selected and fed to the crystal mixer along with the carrier.

In the mixer, the two signals combine to produce beat frequencies, and the difference frequency is selected and amplified by the tuner r-f amplifier. In the VHF mixer, the output of the r-f amplifier and tuner oscillator are combined to produce the receiver i-f in the output. Thus, by double conversion, the UHF program is reproduced by the receiver.

Although like the external converters, these strips provide for double conversion, each pair is designed for one particular UHF channel. The turret has space for six VHF and six UHF pairs of tuner strips which exceeds the allocations for any given area. Thus, the UHF strips provide an easy method of converting a VHF receiver for UHF reception without adding any external units or making circuit changes in the existing receiver.

Due to space limitations, it is not practical to install a high frequency oscillator on the strip therefore, the double conversion is obtained by means of harmonic frequencies of the present VHF oscillator. Although not new, the problem of providing double conversion with a single oscillator, presents some interesting details. In this case, the UHF carrier must be reduced in two steps to the present intermediate frequency of the VHF receiver by using only the fundamental and harmonics of the local oscillator.

In the form of an equation, the relationship between these various frequencies can be expressed as:

$$F = \frac{A + B}{K + N}$$

when:

F = the fundamental frequency of the local oscillator.
A = the desired UHF video carrier frequency.
B = the intermediate frequency of the VHF receiver.
K = the harmonic of F for the first conversion.
N = the harmonic of F for the second conversion.

To illustrate, suppose it is desired to receive UHF channel 40 with a VHF receiver which has a 25.75 video i-f. Channel 40 extends from 626-632 mc therefore, the video carrier is 626+1.25 or 627.25 mc.

Also assume the fourth harmonic is selected for the first conversion, and the oscillator fundamental for the second. Thus, the terms of the equation can be listed as:

$A = 627.25$ mc
$B = 25.75$ mc
$K = 4$
$N = 1$

Substituting in the above equation:

$$F = \frac{A + B}{K + N}$$

$$F = \frac{627.25 + 25.75}{4 + 1}$$

$$F = \frac{653}{5} = 130.6 \text{ mc.}$$

As K represents the fourth harmonic, in frequency:

$$K = 4F = 4 \times 130.6 = 522.4 \text{ mc.}$$

To prevent inversion of the video and sound carriers, this frequency is lower than that of the carrier therefore, for the first conversion, the output frequency is:

$$A - K = 627.25 - 522.4 = 104.85 \text{ mc.}$$

Considered as the first i-f, this frequency is impressed across the input of the VHF circuit and heterodynes with the oscillator fundamental.

$$F - (A - K) = 130.6 - 104.85 = 25.75 \text{ mc}$$

to provide the required second i-f.

Changing only the frequency of the second i-f from 25.75 mc to

45.75 mc, the frequencies work out as follows:

$$F = \frac{627.25 + 45.75}{4 + 1}$$

$$F = \frac{673}{5} = 134.6 \text{ mc}$$

$$K = 4F = 4 \times 134.6 \text{ mc} = 538.4 \text{ mc.}$$

For the first i-f,

$$A - K = 627.25 - 538.4 = 88.85 \text{ mc.}$$

For the second i-f,

$$F - (A - K) = 134.60 - 88.85 = 45.75 \text{ mc.}$$

These examples are given not only to illustrate the general action but to emphasize two important points regarding the installation of the UHF strips. (1) Each pair of strips is designed for a definite and single UHF channel. (2) Each pair of strips is designed also to provide a definite second i-f. To simplify proper installation, each strip carries its channel number followed by a letter, such as 12F or 6R. To meet both requirements the new UHF strips must show the same letter as the VHF strips already in the turret as well as the desired channel number.

UHF Strip Circuit

To provide the various steps of the double conversion, the circuit has been simplified to a minimum as shown by the block diagram of Figure 14 and the schematic diagram of Figure 15.

Compared with the VHF types, the UHF antenna strip has been completely redesigned and includes four coil forms mounted at right angles to the base. Starting at the left of Figure 15, coil form T_1 has two windings, L_1 and L_2. L_1 is center tapped and designed to match the impedance of the common 300 ohm antenna lead-in. Winding L_2 on T_1 and L_7 on T_2 operate as a preselector the output of which appears across L_8.

A UHF Converter. By connecting the antenna lead-in to one pair of terminals and the receiver lead-in to another pair, switching from VHF to UHF is accomplished by simply rotating the left hand knob.

Courtesy General Electric Co.

The mixer circuit consists of winding L_8, crystal diode D_1, a part of winding L_6 on T_4, and capacitor C_3. Winding L_9 on coil form T_3 is connected across C_3 and coupled inductively to coil L_{10}.

The UHF oscillator strip is very much like the VHF type and consists of three windings mounted on a common form. As shown in Figure 15, L_3 is the r-f amplifier tube plate coil, L_4 is connected in the VHF mixer tube grid circuit, and L_5 carries the local oscillator output frequency. The main difference is that one end of the oscillator winding connects through a bias network of R_1 and C_5 to the harmonic generator crystal diode D_2. A connector between the strips completes the circuit of D_2 to the tap on winding L_6.

In operation, the UHF carrier is impressed across L_1 and after passing through the preselector appears across UHF mixer coil L_9. The harmonics of the local oscillator frequency, generated by crystal D_2, are carried by winding L_6 which is tuned to the desired harmonic. Thus, both the carrier and oscillator harmonic frequencies are impressed on the mixer circuit and appear together with their sum and difference frequencies across capacitor C_3.

Windings L_9 and L_{10} serve as an output transformer tuned to the difference between the carrier and oscillator harmonic frequencies. This difference is considered as the first i-f and winding L_{10} is in the grid circuit of the r-f amplifier tube of the tuner. From this point, the operation is the same as in the original VHF circuit. Winding L_3 in the r-f amplifier tube plate circuit and is the same as winding L_3 in Figure 9. The inductive coupling between them induces both the first i-f in winding L_3 and the oscillator frequency in winding L_5 in the mixer tube grid coil, L_4. Here, again, the mixer output is tuned to the difference between the first i-f and oscillator frequency which, in this case is the i-f for which the VHF circuit is designed.

These strips provide a simple yet practical method of converting a VHF television receiver to operate on six UHF as well as six VHF channels. Insofar as the operation is concerned, the only change is in the numbers on the channel selector switch.

* * *

STUDENT NOTES

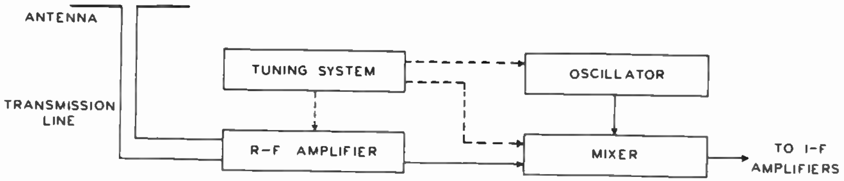

FIGURE 1

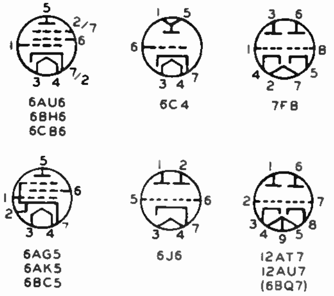

FIGURE 2

TUBE TYPE	INTERELECTRODE CAPACITANCES IN μμFD			Gm μMHOS	μ
	GRID-PLATE	INPUT	OUTPUT		
6AU6	.0035	5.5	5.0	5200	5200
6BH6	.0035	5.4	4.4	4600	6440
6CB6	.0200	6.3	1.9	6200	3700
6AG5	.0250	6.5	1.8	5100	2550
6AK5	.0200	4.0	2.8	5100	3500
6BC5	.0250	6.5	1.8	6100	3050
6C4	1.4	1.8	2.5	3100	19.5
6J6	1.6	2.2	0.4	5300	38
7F8	1.2	2.8	1.4	3300	48
12AT7	1.45	2.5	0.45	6600	62
12AU7	1.5	1.6	0.40	3100	20
6BQ7	1.15	2.85	1.35	6000	35
6SK7	.003	6.0	7.0	2350	282

FIGURE 3

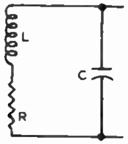

FIGURE 4

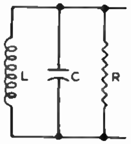

FIGURE 5

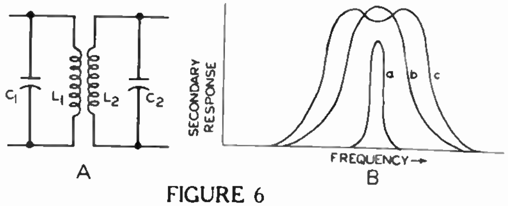

FIGURE 6

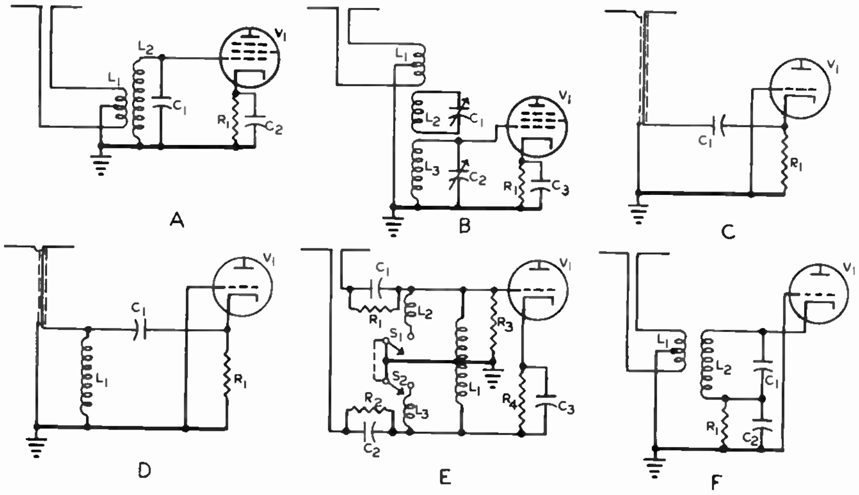

TPC-17

FIGURE 7

STUDENT NOTES

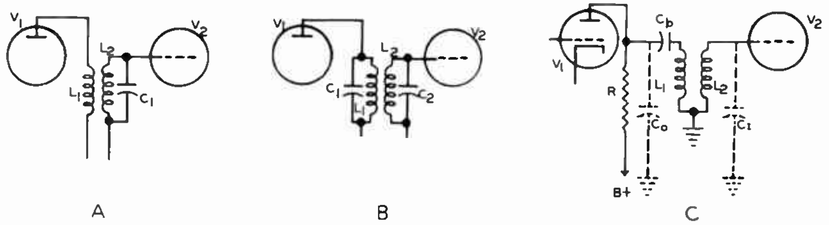

FIGURE 8

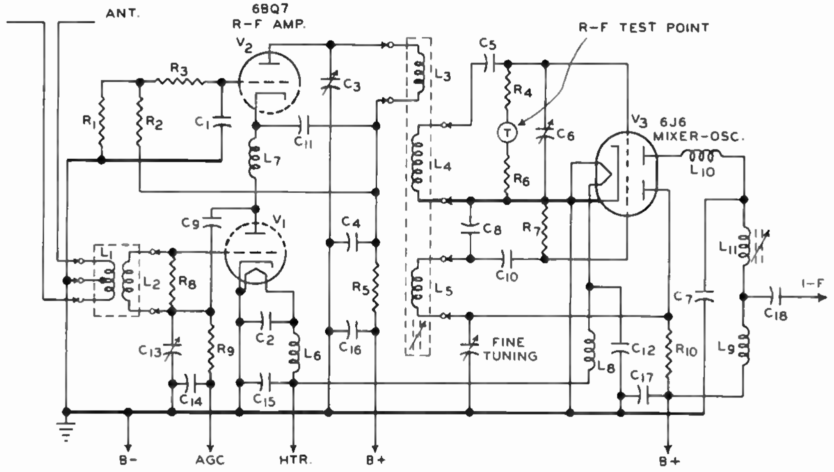

FIGURE 9

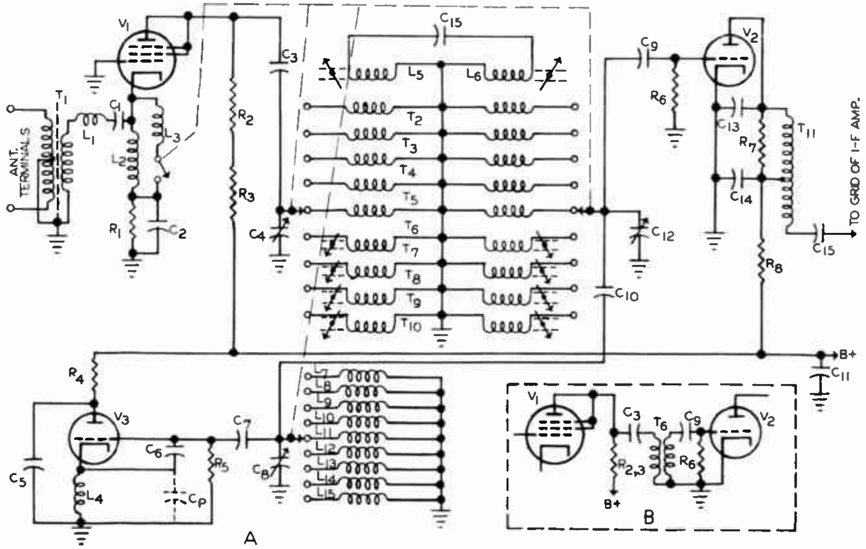

TPC-17

FIGURE 10

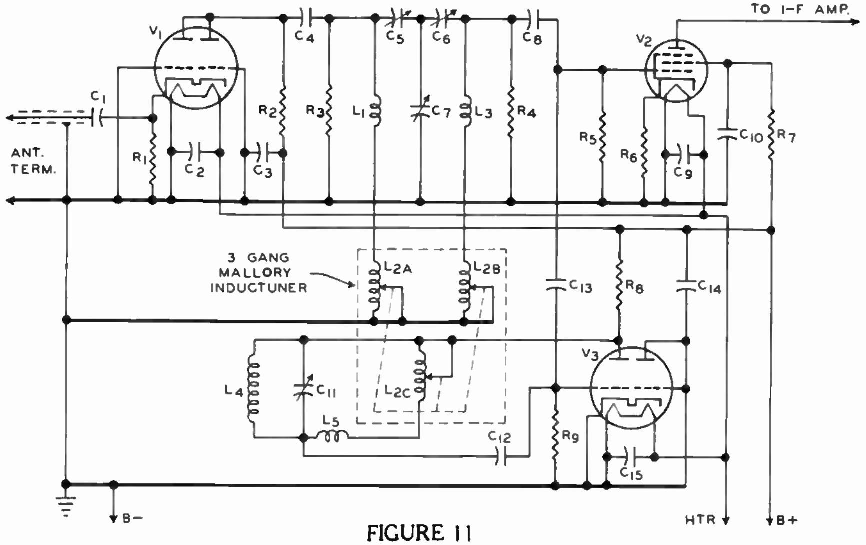

FIGURE 11

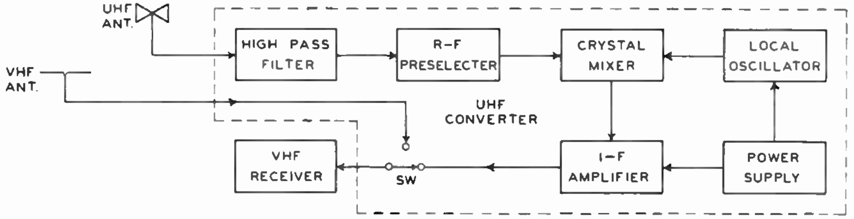

FIGURE 12

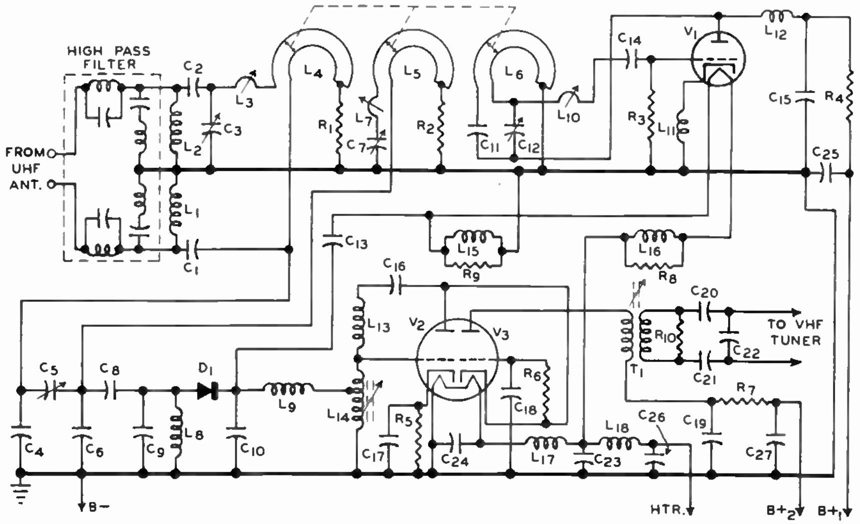

TPC-17

FIGURE 13

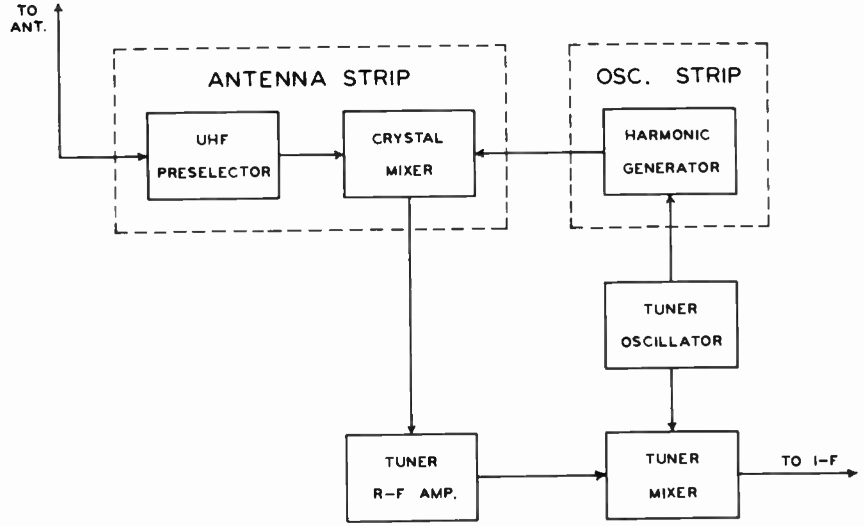

FIGURE 14

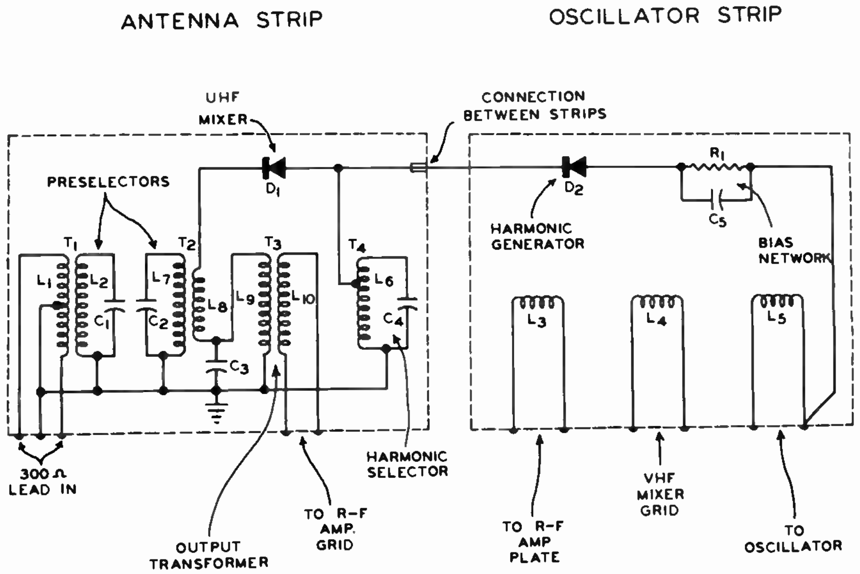

FIGURE 15

DeVRY Technical Institute

Formerly DeFOREST'S TRAINING, INC.

4141 WEST BELMONT AVENUE CHICAGO 41, ILLINOIS

QUESTIONS

TV Receiver R-F Section—Lesson TPC-17A

4

How many advance Lessons have you now on hand? ....

Print or use Rubber Stamp.

Name .... Student No. ....

Street .... Zone .... Grade ....

City .... State .... Instructor ....

Write your answers on the "Ans." line below each question. If more space is needed use reverse side of this page.

1. **Why is great care required in designing and servicing the radio frequency section of a television receiver?**

Ans. ....

2. **In an electron tube, what is meant by the "transit time"?**

Ans. ....

3. **In television receivers, what two classes of tube noises are important considerations?**

Ans. ....

4. **What is the requirement of an amplifier tube in order to provide a high gain receiver r-f section?**

Ans. ....

5. **Electrically speaking, what is the "Q" of a circuit?**

Ans. ....

6. **How is the bandwidth of a tuned circuit commonly defined?**

Ans. ....

7. **What are three advantages of employing an r-f amplifier stage before the mixer in a television receiver?**

Ans. ....

8. **What two advantages are provided by the use of a grounded grid r-f amplifier triode tube?**

Ans. ....

9. **Calculate the desired video i-f and sound i-f if a channel 5 station has a video carrier frequency of 77.25 mc, a sound carrier frequency of 81.75 and the TV receiver tuned to this station has its oscillator tuned to 103.85 mc.**

Ans. ....

10. **Mechanically, what two principal methods of station-to-station tuning are employed in present day TV receivers?**

Ans. ....

FROM OUR *Director's* NOTEBOOK

JEALOUSY

Strictly speaking, Jealousy is a state of mind or an attitude toward what we possess, while Envy has to do more with our desires for the possessions of others.

However, in common usage, the two words become synonymous and Mrs. Jones is said to be "Jealous of Mrs. Smith" because the latter has acquired a new mink coat or a carat-and-a-half diamond. Really, it isn't Jealousy at all. Mrs. Jones Envies Mrs. Smith, and hides it so poorly that in her manner and in the things she says she conveys the impression of thoroughly Disliking her.

Neither Jealousy nor Envy have any excuse for being.

If we EXERT ourselves sufficiently we can have most of the things for which we Envy Others.

Likewise, in EXERTING ourselves, we can Keep the Love, the Affection, the Regard, the Job or the Material possessions we Jealously Fear we are about to lose to another.

Yours for success,

W. C. DeVry

DIRECTOR

PRINTED IN U.S.A.

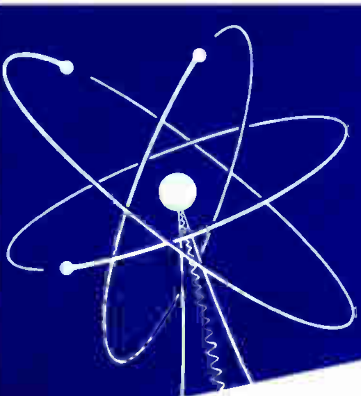

TV RECEIVER VIDEO CHANNEL

Lesson TPC-18A

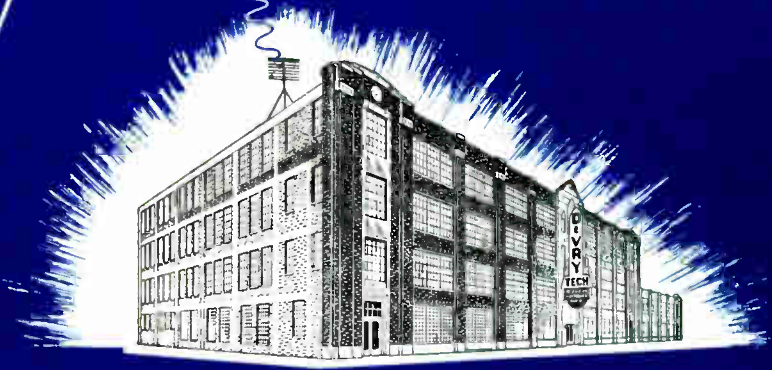

-18

DeVRY Technical Institute
4141 W. Belmont Ave., Chicago 41, Illinois
Formerly DeFOREST'S TRAINING, INC.

TPC-18A

TV RECEIVER VIDEO CHANNEL

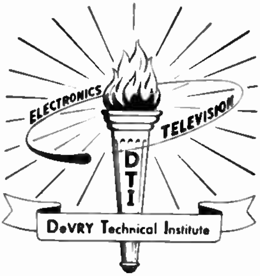

4141 Belmont Ave.
Chicago 41, Illinois

Due to the wide-band requirements of the video signal, microwave equipment is used to relay the remote programs from the mobile unit to the main transmitter.

Courtesy Allen B. DuMont Labs.

Television

TV RECEIVER VIDEO CHANNEL

Contents

To make the world believe in you, you've got to have self-confidence shining in your eyes . . . that certain something which will make people say, "He looks like a successful person."

—Selected

VIDEO CHANNEL

With the modulated video carrier, modulated sound carrier, and local oscillator inputs; the output circuit of the television receiver mixer stage carries a number of heterodyne frequencies. By means of tuned LC circuits, which are described later in this lesson, all except two of these frequencies are attenuated. Known as the "video i-f" and "audio i-f" the two remaining frequencies, together with their sidebands, are increased in magnitude by the following i-f amplifier stages.

At the present time, it is standard practice to employ video intermediate frequencies of 25.75 mc or 45.75 mc with the sound i-f 4.5 mc lower, either 21.25 mc or 41.25 mc. In any receiver, the lower the intermediate frequency employed, the closer the local oscillator frequency to that of the r-f tuning circuits. If these circuits couple the oscillator output through the r-f stage into the antenna circuit, its frequency will be radiated and cause interference in other receivers. It is to reduce this radiation, some receivers employ intermediate frequencies in the 40 to 45 mc range, thereby increasing the separation between the oscillator and r-f circuit resonant frequencies. On the other hand, the lower i-f values provide the advantages of higher amplifier stage gain and stability.

In the television receiver, the series of circuits or stages through which the video signal passes from the mixer to the picture tube is called the VIDEO CHANNEL, while the SOUND CHANNEL includes the various stages through which the sound signal passes from the mixer to the loudspeaker. As described in detail in this lesson, the video channel includes a three to five stage video i-f amplifier, the video detector, and one or more stages of v-f amplification. In addition, many receivers contain circuits for the automatic control of gain, picture brightness, and noise limiting.

THE I-F AMPLIFIER

The receiver i-f amplifier serves to select the desired frequency bands and reject all undesired components of the mixer output, as well as amplify the desired signals to the proper level for application to the respective video and audio detectors. Depending upon the type of receiver, the i-f amplifier may consist of a single or a double series of stages, or a combination of both.

In the dual channel type receivers, the video i-f and sound i-f signals are separated at some point ahead of the video detector. In some cases, this separation occurs at the mixer output before the

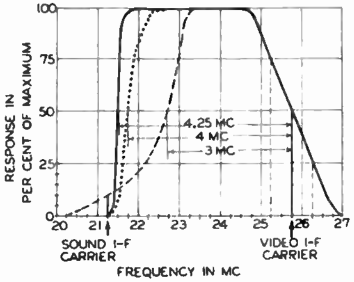

FIGURE 1

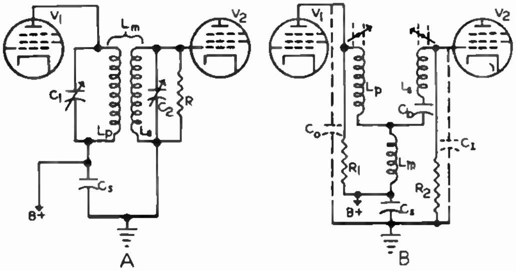

FIGURE 2

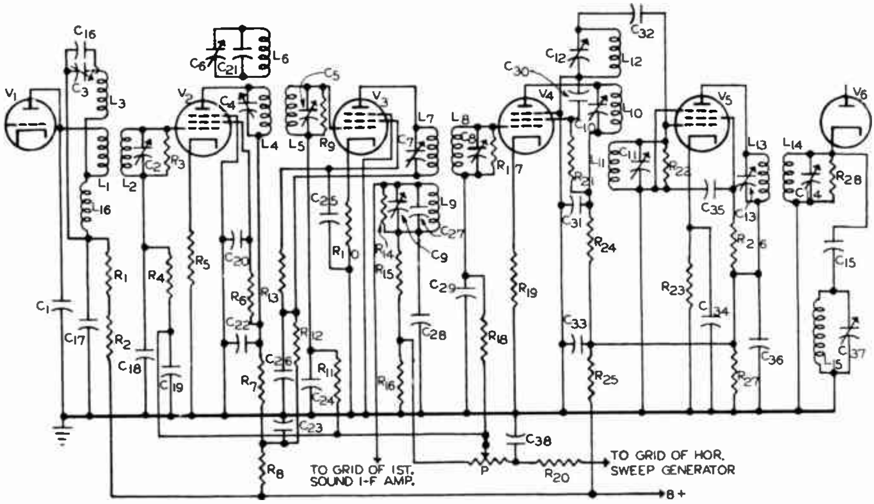

FIGURE 3

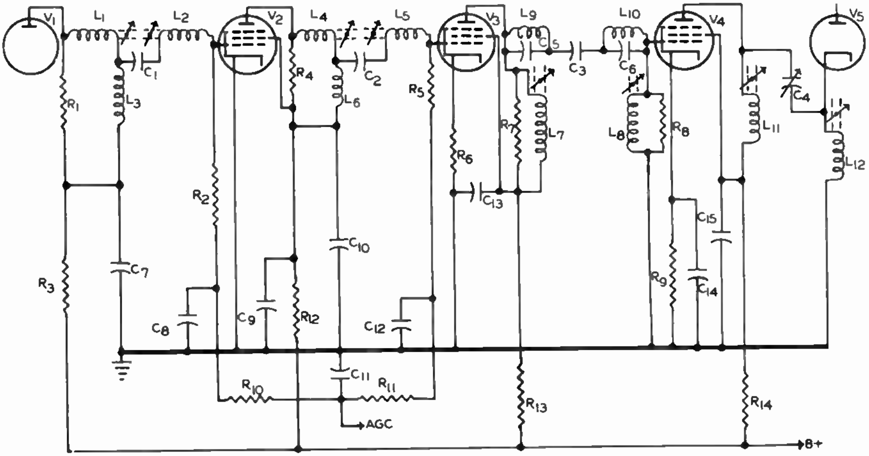

TPC—18

FIGURE 4

signals pass through any i-f amplifiers. In other cases, the two i-f signals are both amplified by one or more common stages before being separated.

After separation, each signal is amplified by separate picture and sound i-f stages, respectively. Thus, the picture and sound i-f amplifiers may be entirely separate, or partly common and partly separate, but so long as the video i-f is the only signal applied to the video detector, the receiver is classed as a dual-channel type.

In the intercarrier type receivers, the two i-f signals are passed through a common i-f amplifier, from the output of which both are applied to the video detector. The video detector causes the i-f carriers to heterodyne and produce the difference frequency of 4.5 mc. Since it carries the audio and video modulation, this difference frequency may be thought of as a second intermediate frequency, which is applied to a sound i-f amplifier tuned to a center frequency of 4.5 mc after passing through the video amplifier. By proper filter action of the v-f amplifier the 4.5 mc signal does not reach the picture tube.

In the sound channel the video amplitude modulation is removed from the 4.5 mc carrier by limiter action after which the a-f signal is recovered by the FM detector, amplified to the proper level, and applied to the loudspeaker.

Bandwidth

To provide the desired detail in the transmitted picture, video modulation frequencies extending up to 4 mc are employed. In the television receiver mixer output, the video i-f contains sidebands corresponding to those associated with the r-f carrier, and which, therefore, extend as much as 4 mc from the i-f carrier. Thus, the video i-f amplifier response must provide for amplification of these sidebands as well as for the i-f carrier.

A Dual Channel TV receiver sound and video i-f strips. The coils are mounted inside the shield cans between the tubes in order to reduce interaction through unwanted magnetic coupling.

Courtesy Allen B. DuMont Labs., Inc.

As you may remember, the received r-f signal consists of the carrier, the upper sideband, and a portion of the lower sideband. Because the local oscillator operates at a higher frequency than that of the incoming carrier, the upper sideband frequencies mix with the local oscillator signal to produce intermediate frequencies which are lower than the i-f carrier, while the lower r-f sideband frequencies result in intermediate frequencies higher than the i-f carrier. Thus, the complete video i-f signal consists of the carrier, a lower sideband extending to 4 mc below the carrier, and a partial upper sideband.

To illustrate this action, in Figure 1, the solid line curve represents the ideal i-f response of a dual-channel type receiver employing a video i-f of 25.75 mc. Here, the horizontal scale along the bottom represents frequency in mc and the vertical scale at the left represents response in per cent of maximum. It is common practice to consider amplifier band-pass as the frequency difference between the points where the response curve crosses the 50% line on the graph. In Figure 1, the solid line curve crosses the 50% line at the 21.5 and 25.75 points. Therefore, this curve represents the maximum practical band-pass of 25.75 – 21.5, or 4.25 mc, as indicated.

A wide band-pass in the video i-f amplifier provides the advantage of greater detail in the reproduced picture, but tends to lower the signal-to-noise ratio because noise energy is distributed evenly over the frequency band. On the other hand, a reduced band-pass results in less fine detail, but a higher signal-to-noise ratio and greater gain per stage are obtained. In consideration of these factors, commercial television receivers generally are designed to have a band-pass of anywhere from 3 to 4 mc as indicated by the dashed line and dotted line curves.

Video I-F Gain

In the television receiver, most of the video signal amplification is provided by the i-f amplifier, the gain of which may be anywhere from 1000 to 10,000 or more. Like the r-f section requirements, the tube and circuit capacitances must be kept as small as possible as they tend to reduce stage gain at the higher frequencies.

The tuned circuit inductors are made variable to permit adjustment of the resonant frequency and generally are overcoupled or resistance loaded to obtain the desired bandwidth. The resulting low impedance of the tuned circuits accounts for the relatively low gain per stage of approximately 20 or less.

As explained earlier, to provide the desired detail in the transmitted television picture, modulation frequencies extending up to 4 mc are employed. For double sideband transmission, this would require an 8 mc band for the carrier and both sidebands. However, each allocated channel is only 6 mc wide and, in addition to the modulated video carrier, must include the modulated carrier for the accompanying sound. To meet this condition, the major portion of the lower video sideband is suppressed in the transmitter antenna system by means of a filter designed to attenuate all frequencies which are more than .75 mc below the carrier.

I-f coils designed for simple impedance coupling. The metal clips are used to mount the coil in chassis holes and to hold the powdered iron cores in position. These cores are screwed up or down from the top side of the chassis until the proper inductances are obtained.

D.T.I. Photo

This type of transmission in which the carrier, one complete and one partial sideband are radiated from the antenna, is called vestigial sideband transmission. With this arrangement, video modulation frequencies of less than .75 mc receive double sideband transmission, while video signal components with frequencies greater than .75 mc receive only single sideband transmission.

The receiver must compensate for this to prevent distortion. Otherwise the video detector output is twice as great for signals below .75 mc as for the higher frequencies. To equalize the output the receiver circuits are adjusted so that, as shown in Figure 1, the response is 50% at the video i-f as compared to the sidebands of the higher signal components. However, both sidebands corresponding to the lower modulation frequencies add to equal the amplitude of the unattenuated sideband. SO THE SLOPE OF THE HIGH FREQUENCY END OF THE VIDEO I-F RESPONSE CURVE COMPENSATES FOR VESTIGIAL SIDEBAND TRANSMISSION AND REDUCES DISTORTION in the picture.

For example, assume the 25.75 mc video i-f carrier is modulated with a 500 kc (.5 mc) signal. The corresponding sidebands are 25.75 $-.5 = 25.25$ mc, and $25.75 + .5 = 26.25$. As indicated by the broken vertical lines in Figure 1, at 25.25 mc the i-f amplifier response is 75% of maximum, and is 25% of maximum at 26.25 mc. Thus, the total response to the two sidebands is 75% +25%, or 100%, and therefore the output of the video detector is the same for the 500 kc signal as it would be if this signal were represented by a single sideband with 100% response. In the same way, all the sideband components between 25.75 mc and 27 mc add to those between 25.75 mc and 24.5 mc, so that the video detector output remains constant from the video i-f carrier down to the desired lower i-f limit.

Video I-F Selectivity

A large part of the television receiver selectivity is furnished by the video i-f amplifier, the tuned circuits of which must be designed to provide a constant gain passband up to 3 or 4 megacycles in width and, at the same time, provide sufficient attenuation beyond the limits of the passband so that the signals modulating the adjacent sound and video carriers do not reach the video channel output. The various signals which must be attenuated are:

1. The sound signal which is accompanying the picture.
2. The sound signal in the channel just below that to which the receiver is tuned.
3. The video signal in the channel just above that to which the receiver is tuned.

In the dual-channel type receiver, it is desirable that an absolute minimum of energy at the sound i-f carrier frequency be applied to the video detector, therefore a sharp cutoff in response is necessary at the low frequency end of the video i-f response curve. This response is illustrated by the solid and dotted-line curves of Figure 1.

In this generalized graph, the response at the sound i-f carrier frequency of 21.25 mc is represented as 0%. Actually, however, the response of a tuned circuit to an a-c voltage can never be reduced to absolute zero. There always is some definite percentage, however small, of the maximum response. For example, if a voltage ratio of 100-to-1 for the video i-f sideband components to the sound i-f carrier will produce satisfactory results in a particular receiver, then a similar graph for this receiver would specify 1% response at the frequency of the sound i-f carrier.

As explained, in the intercarrier type receiver, the 4.5 mc sound carrier is produced in the video detector circuit to which both the video and sound i-f signals are applied. Thus, in this type receiver, the i-f amplifier selectivity must be reduced somewhat at the low frequency end of the passband in order to admit a greater energy at the frequency of the sound i-f carrier. The actual ratio of video i-f amplitude to sound i-f amplitude employed varies with different receiver makes and models, but the sound i-f is never greater than 10% of maximum, as illustrated by the dashed-line curve of Figure 1. The exact reason for the relatively low response to the sound i-f carrier is explained in detail in a later lesson on the sound channel.

To avoid confusion, only a few curves are shown in Figure 1, but this is not intended to indicate that all receivers with a 3 mc i-f bandwidth are of the intercarrier type, nor that all dual-channel receivers employ a 4 mc bandwidth. Both dual-channel and intercarrier types are designed with bandwidths from 3 to 4 megacycles but, in all dual-channel receivers the sound i-f carrier is attenuated to the extent shown by the dotted-line curve. However, in various intercarrier receivers, the sound i-f carrier attenuation may vary from approximately that shown by the dotted-line curve to that shown by the dashed-line curve.

Passed by the relatively broad selectivity of the receiver r-f tuned circuits, the r-f sound carrier of the lower adjacent channel heterodynes with the local oscillator signal to produce an i-f signal which is only 1.5 mc above the desired video i-f carrier.

The production of this undesired i-f signal is as follows: Assume a receiver employing a video i-f of 25.75 mc is tuned to the 60 to 66 mc channel. In this channel, the video r-f carrier frequency is 61.25 mc and, to produce the proper video i-f, the local oscillator operates at a frequency of 61.25 + 25.75 = 87 mc. If some energy from a transmitter operating in the 54 to 60 mc channel is picked up, its r-f sound carrier frequency of 59.75 mc will mix with the oscillator signal to produce a difference frequency of 87 − 59.75 = 27.25 mc.

The i-f strips of a typical television receiver. Notice the clips and core screws for the video i-f coils in the foreground between the tubes.

Courtesy Wilcox-Gay Corp.

Since this undesired sound i-f is not far removed from the desired video i-f, the receiver i-f amplifier tuned circuits must provide strong rejection of the frequency of 27.25 mc. To reduce adjacent channel interference, the FCC does not assign adjacent channels to transmitters operating in the same area. However, in certain fringe area receiver locations, there may be overlapping of signals from transmitters, located in different areas and on adjacent channels, in which case the receiver video i-f amplifier must reject the adjacent channel sound i-f signal.

In similar manner, when received, the video r-f carrier in the upper adjacent channel heterodynes with the local oscillator signal to produce an undesired i-f signal which is 1.5 mc below the desired sound i-f. For instance, the receiver of the above example has a sound i-f of 21.25 mc and, when tuned to the 60 to 66 mc channel, a local oscillator frequency of 87 mc as before. In the 66 to 72 mc channel, the video r-f carrier has a frequency of 67.25 mc, and therefore it mixes with the local oscillator signal to produce an i-f of $87 - 67.25 = 19.75$ mc. Thus, the receiver i-f amplifier response must be very low at this undesired frequency.

Wave Traps

To attenuate or reject these various i-f signals the desired amount, many television receivers employ special series or parallel tuned circuits associated with the i-f amplifier interstage coupling or tube cathode circuits. Known as TRAPS, each of these sharply tuned LC circuits either rejects or provides a low impedance path to ground for the particular signal to which it is tuned.

Such traps are used for the maximum attenuation of the adjacent channel i-f signals, to reduce the "used" channel sound i-f to 10% or less of maximum response, and occasionally to place the used channel video i-f at the 50% response level as explained for Figure 1.

INTERSTAGE COUPLING CIRCUITS

The i-f amplifier coupling circuits must be designed to satisfy the above mentioned requirements of band-pass, gain and selectivity. Usually, either these circuits are designed in terms of BAND-PASS FILTER theory, or a system of STAGGER-TUNED single coil i-f stages is employed. In some cases, a combination of both methods is used.

Band-Pass Filters

A simple band-pass filter consists of a number of tuned circuits and a terminating resistor. The L and C of the tuned circuits are determined by the resistance of the terminating resistor, the frequency limits of the passband and by some particular frequency outside the band at which great attenuation is desired. In this type of filter, there is no coupling of any kind between the various components.

The type of band-pass filter employed in video i-f circuits is known as a coupled filter, and consists of two tuned circuits which are coupled in such a way that the circuit has maximum response at two frequencies. This arrangement is illustrated in Figure 2A which shows a double-tuned coupling transformer, L_pL_s, both primary and secondary of which are tuned to the same frequency and closely coupled to provide the desired double-peaked response and wide bandwidth.

Generally speaking, coupling may be defined as a means of transferring energy from one circuit to another, and any coupled filter contains a component called the MUTUAL COUPLING IMPEDANCE which is common to both circuits and by which the energy transfer is made. Depending upon the filter arrangement, the mutual coupling impedance may be either inductive, capacitive or resistive.

In the circuit of Figure 2A, the magnetic lines of force produced by the primary current couple L_p and L_s, and may be represented as the coupling inductance, L_m. Thus, L_m is the mutual coupling impedance and its value in henrys is determined by the extent to which the lines of force cut the secondary. Theoretically, when all the flux set up by L_p cuts the turns of L_s, then L_m would equal the square root of the product of L_p and L_s. Written as an equation:

$$L_m = \sqrt{L_p L_s},$$

in which: L_m = mutual inductance in henrys
L_p = primary inductance in henrys
L_s = secondary inductance in henrys.

However, this situation is impossible to obtain in practice and the actual flux which cuts the secondary is equal to some fraction, K, of the total flux. Thus, for any practical coupled filter, the mutual coupling inductance is:

$$L_m = K\sqrt{L_p L_s},$$

in which: L_m, L_p and L_s are as in the preceding equation
K = some number between 0 and 1.

Called the COEFFICIENT OF COUPLING, the value of K depends upon the spacing between L_p and L_s, the relative positions of these coils, and their lengths and diameters. When this last equation is rearranged:

$$K = \frac{L_m}{\sqrt{L_p L_s}}$$

It shows K to be the ratio of the mutual inductance actually present (L_m) to the maximum value theoretically obtainable ($\sqrt{L_p L_s}$). For example, when the primary and secondary coil spacing is reduced, L_m is increased and the coefficient of coupling is greater.

Mutual inductance is a difficult quantity to control in assembly line production of magnetically coupled transformers like that of Figure 2A, hence in some receiver designs the i-f amplifier coupling circuits employ an arrangement similar to that shown in Figure 2B. Here, an actual coil, L_m, provides the mutual coupling impedance and, although different in appearance, this coupling network is equivalent to the transformer of Figure 2A.

In the circuit of Figure 2B, the primary, L_p and secondary L_s, are arranged so there is little or no magnetic coupling between them. In series, L_p and L_m form the inductive component of the primary tuned circuit, the capacitive component of which is the V_1 output capacitance C_o.

In similar manner, L_s and L_m form the inductive component, and V_2 input capacitance C_I is the capacitive component of the secondary tuned circuit. In the primary circuit, the signal currents produce an emf across L_m, and this small emf causes currents in the secondary circuit which induce larger signal voltages across the complete tuned secondary circuit.

Capacitor C_b is inserted in series with L_s to prevent the V_1 plate voltage from being applied to the V_2 grid, while C_s provides a signal path to ground from the B+ end of L_m. At the intermediate frequencies, the reactance of C_b and C_s are so low that their effects on the circuit tuning are negligible.

As the inductance of L_m is added to both circuits, the coefficient of coupling for the arrangement of Figure 2B may be expressed as:

$$K = \frac{L_m}{\sqrt{(L_p + L_m)\ (L_s + L_m)}}$$

For coupling circuits like those of Figure 2, as the coefficient of coupling K is increased from a small value, the response at the resonant frequency, f_r, rises to a maximum at which point a maximum transfer of energy takes place between the primary and secondary. At this time, the coefficient of coupling is called the CRITICAL COUPLING, k_c, of the circuit.

With a further increase of coupling, a second peak appears, thus forming a double humped curve. With continued increase in K, these peaks of maximum response become more pronounced and move farther and farther apart.

Since K determines the frequency difference, or spacing between the two maximum response peaks, it can be chosen to provide the desired wide pass band for the video i-f amplifier coupling circuit. The direct relationship between the passband and coefficient of coupling is shown by the following equation:

$$\Delta f = Kf_c$$

in which: Δf = the width of the pass band, and is read as "delta f."
f_c = the center frequency of the pass band.

Therefore, L_m is chosen to give the desired coupling coefficient, K, while L_p and L_s are selected to resonate the two tuned circuits to some frequency, f_r, near the upper limit of the i-f band. Thus, with a relatively large K, the response curve has one peak above the center frequency, f_c, and a second peak at some frequency spaced the same distance below f_c.

For any particular transformer arrangement like those of Figure 2, the response curve shape depends upon the ratio of the actual degree of coupling, K, to the critical value, K_c. This ratio, K/K_c, is called the "shape factor" and, in video i-f coupling circuits, it is common practice to employ values for K which range from 1.5 to 2.0 times the critical value.

Since the required K is determined by the desired passband and center frequency as explained above, the only way in which the shape factor can be changed is by varying the critical coupling, K_c. For any particular set of coils, K_c is determined by the respective coil Q's, and the relationship may be expressed by the following equation:

$$K_c = \frac{1}{\sqrt{Q_p Q_s}}$$

in which: Q_p = the Q of the primary coil
Q_s = the Q of the secondary coil.

As the Q depends upon the resistance associated with a tuned circuit, loading resistors such as R, R_1, and R_2, Figure 2, are employed to reduce the circuit Q's to the degree necessary to provide the desired K_c. In some designs, only the secondary is resistance loaded, while in others, both the primary and secondary are loaded.

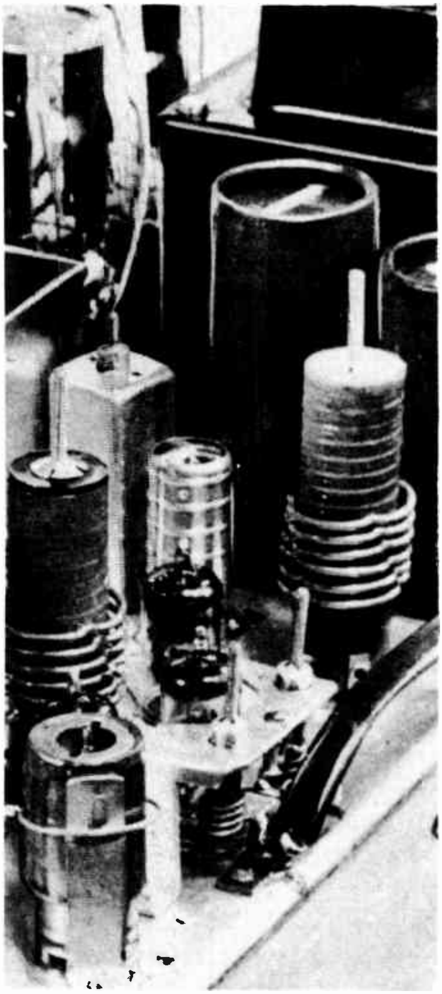

In order to have high Q coils, the sound traps in this receiver use a heavy wire wound on a large coil form. These traps are also core tuned.

Courtesy United Scientific Labs.

For a satisfactory shape factor, the approximate resistance of loading resistor R can be obtained from the following equation:

$$R = \frac{1}{2\pi \Delta f\, C_t},$$

in which: Δf = the width of the pass band
C_t = the total capacitance in shunt with the coil to be loaded.

The amplifier gain is directly proportional to the resistance of R, and therefore it is inversely proportional to Δf and C_t. That is, the wider the passband and the greater the circuit shunt capacitance, the lower the i-f stage gain.

Transformer Coupling

The schematic diagram of the typical i-f amplifier employed in one well known television receiver is shown in Figure 3. In this circuit, mixer tube V_1; i-f amplifier tubes V_2, V_3, V_4, and V_5; and video detector tube V_6 are coupled by means of over-coupled transformers, each of which has a resistor connected across its secondary to provide the desired band-pass characteristics.

With the exception of L_1, each transformer coil is resonated to the desired frequency by the combined capacitance of the tube and a small trimmer capacitor, which provides for slight adjustments of the resonant frequency when aligning the circuit. For the intermediate frequency, the V_2, V_3 and V_4 grid circuits are completed to ground through capacitors C_{18}, C_{24} and C_{29}. A variable negative d-c voltage is applied to the V_2, V_3 and V_4 grid circuits from the slider on contrast control potentiometer P_1.

The contrast control of a television receiver determines the strength of the video signal applied to the picture tube input and thus controls the contrast between the light and dark areas of the reproduced image. The contrast control is manually operated and may be inserted in either the video amplifier or the video i-f amplifier. When used in the i-f section, as it is here, the contrast control is employed to vary the grid bias on most of the i-f amplifier tubes and, thereby, vary their operating points and stage gain.

The required d-c voltage across the contrast control often is obtained from a negative d-c source in the power supply, although some other circuit may supply it. As indicated in the circuit of Figure 3, the grid circuit of the horizontal sweep generator is the negative d-c voltage source for potentiometer P_1. Connected across this voltage source, the voltage divider R_{16}, P_1, and R_{20} provides one fixed and one variable negative d-c voltage from which the sweep generator grid voltage variations are removed by filter capacitor C_{38}. The

V_2, V_3, and V_4 grid circuits are returned through resistors R_4, R_{11}, and R_{18} to the slider of potentiometer P_1, thus allowing their bias voltage to be varied so that the desired contrast is obtained in the reproduced image.

The changing of the i-f amplifier tube grid bias causes a slight variation in the tube input capacitance and therefore, some detuning of the associated tuned circuit. To counteract this change of input capacitance, cathode resistors R_5, R_{10} and R_{19} are unbypassed to provide a small amount of degeneration.

To provide the desired rejection of the adjacent channel and accompanying sound intermediate frequencies and to attenuate the video intermediate frequency to the desired amplitude, several trap circuits are included in this amplifier.

In the V_1 plate circuit, a trap consisting of coil L_3 and capacitors C_3 and C_{16} is connected between the junction of L_1 and L_{16} and the junction of L_{16} and R_1, this latter point being bypassed to ground by C_{17}. Inductively coupled to L_1 and tuned to the video i-f, the trap absorbs energy at this frequency, and thereby assists in reducing the response to the 50% point on the over-all response curve as explained for Figure 1. Because it absorbs energy from L_1, it is known as an ABSORPTION TRAP.

Magnetically coupled to the primary of the second i-f transformer, coil L_6 with capacitors C_6 and C_{21} forms a trap circuit which is resonant to the adjacent channel sound intermediate frequency. $L_6C_6C_{21}$ also is known as an ABSORPTION TRAP since, at the frequency to which it is tuned, it absorbs energy from the coupling circuit.

The sound i-f signal is removed from the video channel and applied to the sound channel by means of absorption trap $L_9C_9C_{27}$, which is tuned to the accompanying sound i-f and inductively coupled to the primary winding L_7 of the third video i-f transformer.

One end of the trap is connected directly to the control grid of the first sound i-f amplifier tube while the other end is returned through R_{15} to the junction of R_{16} and P_1. Thus, the fixed negative voltage at this junction provides the amplifier tube bias. The sound signal path to ground is completed through capacitor C_{28}, which is connected between ground and the junction of L_9 and R_{15}. Due to its coupling to L_7, the trap absorbs sound i-f energy from the video i-f signal and develops a voltage that is applied to the sound i-f amplifier. Resistor R_{14} is employed to load the trap and widen its response so that it will pass the frequency modulated sound band.

The remaining two traps are of the series type and are tuned to the accompanying sound intermediate frequency. The first trap consists of L_{12}, C_{12} and C_{32} and is connected between the V_5 grid and ground, while the second consists of L_{15}, C_{15} and C_{37} and is connected between the V_6 cathode and ground. Although not readily apparent, these traps are series resonant circuits, and the combination of two capacitors and one coil for each trap provides much sharper tuning than could be obtained with a simple LC circuit.

In both traps, the parallel tuned circuits, $L_{12}C_{12}$ and $L_{15}C_{37}$, are resonant at a frequency higher than the accompanying sound i-f. Thus, at the intermediate frequency, the parallel tuned circuits are inductive. By varying the parallel circuit resonant frequency, the inductance may be varied to bring the complete trap circuit into series resonance. Since the trap impedance is minimum at the resonant frequency, it offers a ready path to ground for any accompanying sound i-f that may reach it.

Mutual Impedance Coupling

To illustrate the use of both coupled filters and capacitive coupling, Figure 4 shows the i-f amplifier employed in another nationally advertised television receiver. V_1 is the mixer; V_2, V_3, and V_4 are i-f amplifiers; and V_5 is the video detector. Coupled filters similar to that of Figure 2B are employed between V_1 and V_2, and V_2 and V_3, while capacitive coupling is employed between V_3 and V_4, and V_4 and V_5.

In the coupled filter between V_1 and V_2, L_1 and L_3 in series resonate at the desired frequency with the V_1 output capacitance, L_2 and L_3 in series resonate with the V_2 input capacitance and L_3 provides the mutual coupling impedance. Coils L_1 and L_2 have movable, powdered iron cores that permit the adjustment of the resonant frequency to the desired value. D-C blocking capacitor C_1 prevents the V_1 d-c plate voltage from being applied to the V_2 control grid while allowing the signal to pass freely.

Resistors R_1 and R_2 load the tuned circuits to widen the coupling circuit response, while bypass capacitors C_7 and C_8 return the lower ends of L_3 and R_2 to ground. A variable, negative d-c voltage from an automatic gain control circuit, the operation of which is described later, is applied through R_{10} and R_2 to the V_2 control grid.

In like manner, L_4 and L_6 resonate with the V_2 output capacitance, L_5 and L_6 with the V_3 input capacitance, and L_6 provides mutual coupling between the primary and secondary circuits. C_2 prevents the V_2 d-c plate voltage from being applied to the grid of V_3, while R_4 and R_5 broaden the response. Signal paths to ground are provided by C_{10} and C_{12}, and as indicated, an agc voltage is supplied through R_5 and R_{11} to the V_3 grid circuit.

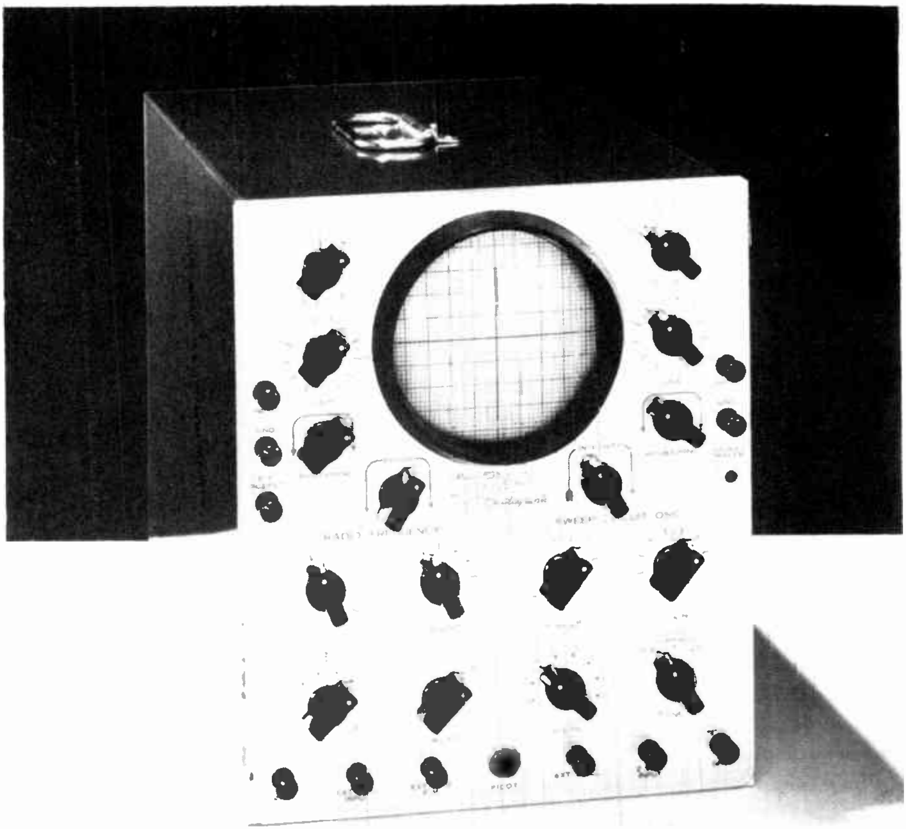

The actual response curve of video i-f amplifiers can be reproduced on an oscilloscope screen when used with a sweep generator.

Courtesy Hickock Electrical Instrument Co.

The circuit between V_3 and V_4 employs capacitive coupling by means of C_3, the capacitance of which is large enough to make its reactance very low at the intermediate frequency. Coils L_7 and L_8 are resonated at the desired frequencies with their respective tube capacitances and are loaded by resistors R_7 and R_8. There is no inductive coupling between them. In the V_3 plate circuit, the signal path from L_7 to ground is completed by bypass capacitor C_{13}.

In series with C_3 between V_3 and V_4, traps L_9C_5 and $L_{10}C_6$ are tuned respectively to the adjacent channel and accompanying sound intermediate frequencies. Designed so that their Q's are very high, these traps are very sharply tuned and present a very high impedance to both sound i-f signals, but offer very little impedance to the video i-f signals. Thus, very little, if any, sound i-f signals pass through the coupling circuit, while the video i-f signal passes freely.

The V_4 output is coupled through C_4 to the input circuit of video detector V_5. Resonated with their respective shunt capacitances, coils L_{11} and L_{12} form the two sections of a coupled filter in which the degree of coupling may be adjusted by varying the capacitance of C_4.

Illustrated in Figures 3 and 4, the bandpass filter method of interstage coupling provides higher gain per given bandwidth because the output capacitance of one tube is isolated from the input capacitance of the following one. Hence the various tuned circuits can have relatively high inductances.

Stagger-Tuning

Because of its simplicity and ease of adjustment, another method of interstage coupling, known as STAGGER-TUNING, has come into common use in wideband i-f amplifiers. In this method, a single tuned circuits acts as the common coupling impedance between each pair of tubes and produces a single peaked response curve. In a television receiver, several single tuned stages are employed, with each adjusted to a different frequency within the desired pass band so that, when all the individual response curves are combined, the result closely resembles the curve of Figure 1.

Figure 5A shows the diagram of a two stage, stagger tuned i-f amplifier in which L_1 and C_1 form a tuned circuit that is resonant at one frequency within the i-f pass band, and L_2 and C_2 constitute the second tuned circuit which is resonant at a different frequency. Shown dotted, C_1 represents the sum of the V_1 output capacitance, the V_2 input capacitance and the circuit stray capacitance. Likewise, C_2 represents the sum of the V_2 output, the V_3 input and the circuit stray capacitances. Coils L_1 and L_2 contain movable, powdered iron cores that permit varying the coil inductance so that the resonant frequency may be adjusted to the desired value.

The i-f signal is coupled between tubes by means of capacitors C_3 and C_4, which have very low reactance at the intermediate frequency. Bypass capacitors C_5 and C_6 complete the signal paths to ground from the B+ ends of L_1 and L_2. The reactances of C_3, C_4, C_5, and C_6 are so low that resistors R_1 and R_2, in addition to completing the grid circuits to ground, are effectively in parallel with their associated tuned circuits, and thereby reduce the circuit Q and broaden the response curves.

In the adjustment of television receiver i-f amplifier tuned circuits, it is convenient to consider the bandwidth as the frequency difference between the video i-f carrier and some point on the opposite slope of the over-all response curve. Although this reference point varies with different manufacturers, most often it is taken at the 50% response level as explained above for Figure 1.

However, in the design of an individual tuned circuit, bandwidth is assumed to be the frequency difference between two points, equidistant above and below resonance, at which the response is some stated percentage of the resonant frequency response. Generally, this is taken as 70.7%. Also, when designing an i-f amplifier having several stages, the calculations for the over-all bandwidth may be made on the basis of the 70.7% response, regardless of the reference points to be employed when the receiver is adjusted for the precise shape of the response curve desired.

In the case of a single stage tuned amplifier, employing one tuned circuit that is loaded by a low resistance, such as shown in Figure 5A, the bandwidth between the 70.7 percent points is given by:

$$\Delta f = f_r\left(\frac{X_r}{R}\right) = \frac{f_r}{Q_e}$$

in which: Δf = bandwidth
f_r = resonant frequency
X_r = reactance of inductive or capacitive element of the tuned circuit at the resonant frequency.
R = loading resistance
$Q_e = \frac{R}{X_r}$ = effective Q of a heavily loaded tuned circuit.

When the amplifier system has two or more stages, all of which are tuned to the same frequency, the over-all amplification characteristic is the product of the amplification characteristics of the individual stages, and therefore, it is a narrower bandwidth than the individual stages.

For example, when both amplifier stages of Figure 5A are indentical and are tuned to the same frequency, the total gain is equal to the square of the gain of either stage. However, the 70.7 percent points of the individual stage responses now become the $(.707)^2$ or 50 percent points of the two stage amplifier and the 70.7 percent points of the two stage amplifier corresponds to a bandwidth that is about 64.4 percent of the single stage bandwidth. Therefore, in the circuit of Figure 5A, if each stage has a gain of 10, a bandwidth of 4 mc, and both are tuned to the same frequency; the over-all gain is 10^2 or 100, while the over-all bandwidth is $.644 \times 4$ or 2.56 mc.

This reduction of bandwidth is undesirable in the television receiver i-f amplifier since it reduces the fine detail in the reproduced image. Thus, as more stages are added to the amplifier, if the desired bandwidth is to be maintained, the Q of the individual stages must be decreased by reducing the resistance of the shunting or loading resistor R. This resistance is the maximum impedance that the tuned circuit can have under any condition and when it is decreased, the amplifier gain per stage, which is given by $G = g_m R$, is reduced also, therefore more stages are required to provide the desired output.

As stages are added, the reduction of bandwidth may be overcome by tuning the alternate stages slightly above and below the center frequency of the i-f pass band. For example, in a two stage amplifier, if the two circuits are tuned to frequencies that are equidistant above and below the center frequency, f_0, and are separated by an amount equal to the desired bandwidth, Δf, the over-all bandwidth is found to be 1.4 times that of the individual stages.

Because of the detuning, the amplification of each stage at the center frequency, f_0, is 70.7% of the resonant frequency value and the over-all gain is equal to only one-half the square of that of a single stage. In Figure 5A, when each stage has a gain of 10, a bandwidth of 4 mc and they are tuned respectively to $f_0 + .5\ \Delta f$ and $f_0 - .5\ \Delta f$, the overall gain is $.5 \times 10^2$, or 50, and the bandwidth is 1.4×4 or 5.6 mc.

However, to meet the rejection requirements of the television receiver i-f amplifier, the over-all bandwidth must be reduced from 5.6 mc to 4.0 mc, a reduction of 29%. This may be accomplished by diminishing the bandwidth of each tuned circuit by the same amount. Hence, if the bandwidth of each circuit is reduced 29%, that is to $.71\ \Delta f$, and their resonant frequencies chosen equal to $f_0 + .355\ \Delta f$ and $f_0 - .355\ \Delta f$, the over-all bandwidth is equal to $1.4 \times .71\ \Delta f$, or $.994\ \Delta f$, which is approximately the desired bandwidth.

To reduce the individual bandwidths to this value, the effective Q of the tuned circuits must be increased by a factor of 1.4, as indicated in the equation. Since the reactive component of the effective Q is determined by the tube and stray capacitances and the i-f frequency, the Q may be increased only by increasing R. With the wide band amplifier gain given by $G = g_m R$, an increase in the resistance of R to 1.4 times its original value causes a like increase in the stage gain. Therefore, the over-all gain of the two stage amplifier is equal to one-half the square of 1.4 times the original gain per stage.

This arrangement is illustrated in Figure 5B where the band center frequency f_0 is 24 megacycles. The voltage gain-vs-frequency response of the first stage is represented by the solid line curve A and that of the second stage by curve B. The gain values for these curves are given along the left edge of the graph. The over-all response of the two stages is shown by the dotted curve C, the values for which are read along the right edge of the graph.

When, as in the above examples, a desired over-all bandwidth of 4 mc is assumed, then $.355\ \Delta f$ is equal to $.355 \times 4 = 1.42$ mc. The resonant frequency, f_A of the first stage is equal to $24 - 1.42 = 22.58$ mc, and the resonant frequency, f_B, of the second stage is equal to $24 + 1.42 = 25.42$ mc, as indicated in the Figure.

The over-all bandwidth is equal to $.944 \times 4 = 3.98$ mc or approximately 4 mc, while the over-all gain is equal to $1/2\ (1.4 \times 10)^2 = 14^2/2 = 98$. Thus, as shown by curve C, without an appreciable decrease in over-all band width, approximately the same over-all gain is obtained as with two stages tuned to the same frequency.

Impedance Coupling

In order to produce some desired i-f response characteristic, the stagger tuning method may be modified by tuning all or most of the coils to different frequencies. An example of this modification may be found in the video i-f amplifier shown in Figure 6. This i-f amplifier employs five stagger tuned circuits, each of which is tuned to a different frequency within the band with the respective individual bandwidths and resonant frequencies chosen so that the desired over-all response is obtained.

A good sweep generator is essential for accurate reproduction of the i-f amplifier response curve on an oscilloscope screen.

Courtesy RCA Victor

The first tuned circuit consists of L_1 resonated with the output capacitance of mixer tube V_1 and input capacitance of the first i-f amplifier V_2. In a like manner, L_3, L_5, L_8 and L_{11} are resonated with the corresponding output and input capacitances in the 2nd, 3rd, 4th and 5th stages respectively. Insofar as the coupling action is concerned, it makes little difference whether the inductance element is located in the plate or grid circuit of the amplifier tube, and, in this amplifier, coil L_8 is located in the grid circuit of the last i-f tube and L_{11} in the cathode circuit of the video detector V_6.

Absorption traps are employed in the first four stages. In the first stage, trap L_2C_3 resonates at the accompanying sound intermediate frequency and, as indicated, a tap on L_2 is connected to the grid of the first sound i-f amplifier tube. Therefore, the sound and picture i-f's are separated in the mixer output circuit, and for the remaining stages of the picture i-f amplifier, the over-all selectivity is adjusted to pass only the video i-f and its sidebands.

Trap L_4C_7 is tuned to absorb energy at the frequency of the beat note produced by the sound carrier in the channel just below the tuned channel. Trap L_6C_{12} is employed in a like manner to absorb energy at the frequency of the beat note produced by the video carrier in the channel just above the tuned channel.

Tuned to the accompanying sound i-f, traps L_7C_{18} and $L_{10}C_{19}$ prevent energy at this frequency from reaching the video detector. Absorbing energy at the accompanying sound i-f, $L_{10}C_{19}$ "reflects" resistance into the cathode circuit of V_5. This reflected resistance produces degeneration in the amplifier circuit so that the stage gain is greatly reduced at the sound intermediate frequency.

Combination Coupling Circuits

In some receivers, the video i-f amplifiers contain both band pass filter and stagger tuned coupling systems as illustrated in Figure 7.

Here, between mixer tube V_1 and i-f amplifier V_2, and also between tubes V_4 and V_5, the coupling circuits are of the bandpass filter type, while stagger tuned circuits couple V_2 to V_3 and V_3 to V_4. Between V_5 and video detector V_6, a single tuned circuit consists of L_{11} and the circuit shunt capacitances. In the first stage, trap $L_3C_4C_5$ is tuned to reject the adjacent sound channel i-f, while in the fourth stage, trap $L_8C_{16}C_{17}$ rejects the accompanying sound i-f.

The action of rejector type traps is to offer high impedance at the frequency to be rejected. However, in the coil of the trap, I^2R losses tend to prevent complete blocking of the signal to be rejected. In the circuits of Figure 7, this fault is counteracted by resistors R_3 and R_{17} connected from ground to the center tap of the capacitance of the respective traps. These resistors produce a bridgelike action, causing the traps to be balanced at the respective rejection frequencies. When so balanced, the trap circuits have nearly infinite impedance, resulting in almost zero transmission of the respective rejection frequencies.

For removing the accompanying sound i-f from the video channel, tuned circuit $L_{12}C_{14}$ is connected so that a part of the coil is in series with R_{14} between the V_4 cathode and ground. The circuit is tuned to the accompanying sound i-f so that V_4 cathode current variations at this frequency will cause a large voltage to be developed across the coil. From the ungrounded side of L_{12}, the sound i-f signals are coupled through C_{18} to the grid of the first sound i-f amplifier tube. With the sound i-f removed at this point, the circuits preceding this stage must have an over-all response broad enough to include both the sound and video sidebands, while those following need to pass only the video sidebands.

THE VIDEO DETECTOR

Operating on the same principle as the detector in an AM radio receiver, the video detector demodulates the video i-f to eliminate the intermediate frequency component. Its output contains only the video, blanking, and synchronizing signals at proportional amplitudes and exactly the same frequencies which they have at the input of the transmitter modulated stage. In addition, the video detector should not load the preceding i-f stage or the following video amplifier circuit.

To meet these various requirements, the video detector has a relatively low resistance load and contains peaking coils or a bandpass filter in its output circuit like those explained in the lesson on video frequency amplification.

Whether the video detector rectifies the positive or negative portion of the applied i-f signal depends upon the connections to the tube elements. The two possible arrangements are shown in Figure 8. Here, e_I represents the i-f amplifier a-c voltage output which is applied to the input of the video detector. With diode V_1 connected as shown, conduction occurs only during the positive portions of the input signal. Filtered by the output capacitance of the tube, the output e_{O_1} has the form shown at the upper right. On the other hand, if the diode is connected as V_2, conduction occurs during the negative portions of the input signal, and the filtered output e_{O_2} has the form shown at the lower right.

Although all of the signal components of e_{O_1} are positive with respect to ground, the blanking and synchronizing signals are more positive than the portions representing picture modulation. For this reason, e_{O_1} is termed a NEGATIVE PICTURE PHASE SIGNAL. In direct contrast, all of the components of e_{O_2} are negative with respect to ground, but the signal picture portions are less negative than the blanking and synchronizing pulses, and therefore, e_{O_2} is called a POSITIVE PICTURE PHASE SIGNAL.

Insofar as the detector action is concerned, either circuit arrangement of Figure 8 is satisfactory. However, the choice depends upon whether a negative or positive picture phase signal is needed at the input to the video frequency amplifier. In turn, this requirement is determined by the picture tube element to which the v-f amplifier output is applied and the number of times that the signal is inverted between the output of the detector and the input to the picture tube.

For the brilliance of the spot to be decreased during the blanking intervals, the video signal must have positive picture phase when applied to the picture tube grid. Also, since a positive swing of the cathode is equivalent to a negative swing of the grid, the video signal must have negative picture phase when applied to the picture tube cathode.

For example, suppose in a particular receiver, a one stage video frequency amplifier has its output applied to the picture tube control grid. A positive picture phase signal is required at the picture tube input and, since the v-f stage inverts the signal once, a negative picture phase output is needed from the video detector. That is, the detector tube connections of V_1, Figure 8, are required.

If, with the same picture tube input connections, the v-f amplifier contains two stages, a positive picture phase detector output is needed, while, with three v-f stages, the net result is the same as with one stage, so far as signal phase inversions are concerned. Thus, for a given picture tube connection, the required detector output polarity depends upon whether the v-f amplifier inverts the signal an odd or even number of times, rather than upon the total number of inversions.

Picture phase requirements of the detector output vary in different receivers and those of any particular case can be obtained from Table 1. For example, when one video amplifier is used between the detector and the picture tube grid the picture phase of the detector output must be negative.

TABLE 1

Picture Tube Element to Which V-F Amp. Output is Applied	Number of Times Signal is Inverted By V-F Amp. Ckts.	Picture Phase Required at Video Detector Output
Grid	Odd Number	Negative
	Even Number	Positive
Cathode	Odd Number	Positive
	Even Number	Negative

Since the cathode coupled type v-f stages do not result in inversion of the video signal, the middle column of this Table is in terms of the number of actual inversions rather than the number of video frequency stages.

AUTOMATIC GAIN CONTROLS

In many broadcast radio receivers, an avc circuit automatically reduces the total amplification of the signal when the strength of the received carrier wave increases, and increases the amplification when the carrier strength decreases. The change in amplification is accomplished by operating remote cut-off type amplifier tubes with a grid bias voltage which is directly proportional to the average carrier amplitude. An increase in average carrier strength produces an increase in negative grid bias, thereby causing the amplifier tubes to operate on a less steep portion of their E_cI_b characteristics and produce less signal amplification. This amounts to varying the gain of the amplifier stages.

In the sound receiver, the avc is operating properly when it maintains a substantially constant average amplitude of signal input to the second detector. However, in the transmission of television signals, the carrier average amplitude is purposely made to vary in accordance with the average background brightness of the scene, and therefore, it is undesirable that the average carrier strength variations be suppressed in the receiver. For this reason, the television receiver gain control circuit usually differs slightly from that used in the radio broadcast receiver.

The general method employed in the television receiver is to develop a bias which is proportional to the peak instead of the average amplitude of the video carrier. For this reason, when the varying bias depends on the amplitude of the signal peaks, the circuit is called an AUTOMATIC GAIN CONTROL (agc). If no fading or other effect causes a variation in peak carrier strength, this bias and, therefore, the gain of the amplifiers remains constant. However, any peak carrier amplitude change will result in a compensating change of agc bias and signal amplification.

In television transmission, the picture signal black level is maintained at a constant carrier level that is equal to 75% of the peak carrier amplitude. Hence, corresponding to the peak carrier level, the tips of the synchronizing pulses always reach a uniform maximum amplitude and afford a convenient reference signal strength for operation of a television agc system.

Simple AGC

Figure 9 shows the diagram of an automatic gain control circuit. V_1 is the last i-f amplifier tube, V_2 is the video detector and agc diode, and V_3 is the v-f output amplifier. The V_1 output appears across L and is coupled through C_2 to the plate of the agc diode section of V_2.

The positive signal alternations cause the diode to conduct, with electron flow from the V_2 cathode to the plate and then to the C_2 negative plate. From the positive plate, the electron path continues through L to ground, from ground to the C_5 negative plate and from the C_5 positive plate to the V_2 cathode.

In parallel with C_5, series connected resistor R_4 and a part of potentiometer P_1 are also in the electron path. Because the diode and coil L have very low resistances and C_5 is large in comparison to C_2, C_2 charges very rapidly to the polarity indicated and very nearly equal to the i-f signal peak.

During the intervals between the i-f signal positive peaks, the diode becomes nonconductive and C_2 discharges through R_3 and the coil L. The resistance of R_3 is made very large so that the discharge circuit time constant is relatively long and the capacitor discharges slowly.

Neglecting the relatively low d-c resistance of L, the positive plate of C_2 is at d-c ground potential while the other plate is negative with respect to ground by the d-c value, e_{C_2}. Thus, for simplicity, it might be assumed that a battery with voltage e_{C_2} is connected with its negative terminal to the plate of the agc diode and its positive terminal to ground. This negative bias on the plate permits conduction of this tube only during the sync pulse intervals when the signal is most positive.

The tops of the sync pulses are equal to the peak carrier amplitude, any variation of which varies the amount of the agc diode conduction and the developed voltage e_{C_2}. From the junction between C_2 and R_3, the negative d-c voltage e_{C_2} is coupled through the filter $R_2C_4R_1C_3$ to the grid circuits of the r-f and i-f amplifiers as indicated. Thus, an increase in the i-f amplifier output peak causes greater conduction of the agc diode and an increase in negative agc bias voltage e_{C_2}. Applied to the r-f and i-f amplifier tube grid, the increase in negative bias reduces the amplification in these stages. In a similar manner, a decrease in the signal peak causes less conduction of the diode, a decrease in e_{C_2}, and an increase in the r-f and i-f amplification.

In the circuit of Figure 9, potentiometer P_1 serves as the contrast control, permitting variation of the magnitude of the developed agc bias and the self-bias in the cathode circuit of video frequency output tube V_3. Resistor R_5 and the part of P_1 between it and the slider form a voltage divider between B+ and ground. Connected through R_4 to the junction between R_5 and P_1, the cathode of the agc diode has a d-c bias which is positive with respect to ground.

When the slider is moved toward R_4, this positive bias is reduced and the conduction of the agc diode is increased. This action causes a higher agc voltage which decreases the amplification in the r-f and i-f amplifier stages. This same adjustment of the slider results in a greater resistance in the V_3 cathode circuit, increasing the bias and reducing the amplification in this stage. The reverse is true also. Moving the contrast control slider toward R_6 causes an increase in amplification by the r-f, i-f, and v-f output stages.

voltages from the power supply. In operation, the i-f signal that is developed across coil L_1 is coupled through C_2 to the agc detector, where the positive signal alternations cause the tube to conduct and charge C_3 to a value e_{C_3} which is nearly equal to the i-f signal peak.

The agc detector output, e_{C_3} is applied through the long time constant filter $R_3R_4C_4$ to the grid of V_3 which operates as a direct coupled amplifier. As shown, the V_3 plate connects through R_{10} and R_{11} to ground. However, normal operation of this tube is obtained since its cathode is connected to the slider on potentiometer P_1, and, as indicated, it is 99 volts negative with respect to ground. Likewise, returned through R_4, R_3 and R_2 to the -105 volt power supply terminal, the V_3 grid is operated 6 volts negative with respect to the cath-

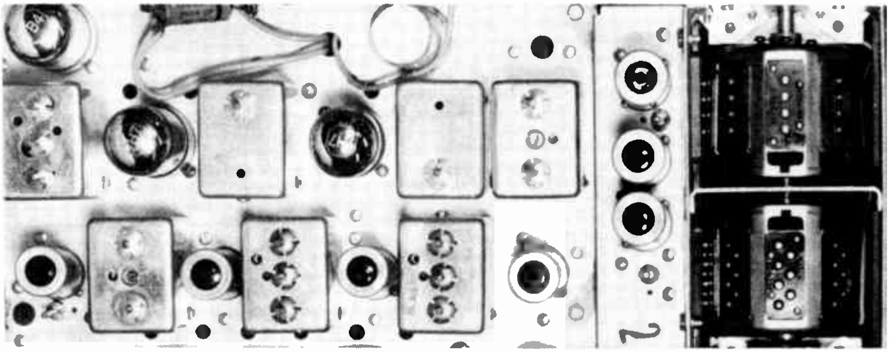

The top view of the i-f strips and tuner in a TV receiver. The sound traps are enclosed in the same shield can as the i-f coils and are tuned by extra screws on top of can.

Courtesy Philco Corporation

Amplified AGC

Some receivers incorporate an agc voltage amplifier to increase the sensitivity of the system and, as an example of this arrangement, Figure 10 shows another agc circuit. Here, V_1 is the last i-f amplifier tube, V_2 is the video detector and agc detector, V_3 is the agc amplifier and V_4 is the agc diode.

In order to produce the desired bias, this entire circuit is operated below ground potential and is supplied with negative d-c operating ode, less the voltage e_{C_3} produced by the received signal.

In series in the V_3 grid-cathode circuit, e_{C_3} opposes the applied fixed bias, therefore the net negative grid bias varies with e_{C_3}. The V_3 plate current in R_{10} and R_{11} causes voltage drops that make the V_3 plate negative with respect to ground. The negative voltage at the junction of R_{10} and R_{11} is filtered by C_7, which charges to the polarity shown, and is applied to the grid return of the r-f amplifier tube.

Capacitor C_6 is connected across both resistors and charges to their total voltage drop with the polarity shown. The voltage across C_6 is applied through filter R_9C_5 to the grid returns of the i-f amplifier tubes.

In operation, an increase in the i-f signal peak causes greater conduction of the agc detector during the sync pulse intervals, charging C_3 to a higher voltage. The increase of e_{C_3} makes the V_3 grid less negative, increasing the plate current and, therefore, the voltage drops across R_{10} and R_{11}. This action results in an increase of the e_{C_6} and e_{C_7} negative agc voltages, which reduce the signal amplification in the r-f and i-f stages of the receiver.

On the other hand, when the signal peak decreases, e_{C_3} is reduced, V_3 plate current decreases, and the reduction of voltages e_{C_6} and e_{C_7} permit greater amplification in the r-f and i-f stages. The long time constant filter $R_3R_4C_4$ prevents rapid changes of the V_3 bias so that rapid changes in signal strength do not cause changes in the i-f and r-f amplifier bias voltages. The operating voltage of the V_3 cathode can be changed by means of the contrast control potentiometer P_1, thereby permitting manual adjustment of the agc voltages developed.

Since capacitor C_6 is connected across both R_{10} and R_{11}, a higher voltage is developed across it than across C_7. For very high input signal amplitudes, the agc bias applied to the i-f amplifier grids may be so high as to cause the tubes to operate near the cut-off point and distort the signal. To prevent this distortion, agc diode V_4 is employed to limit the amount of bias applied to the i-f amplifier tubes by connecting its cathode to the i-f agc line and its plate to a −7.2 volt power supply terminal.

Normally, the V_3 plate and therefore the V_4 cathode is less negative than −7.2 volts, and V_4 is nonconductive. However, when e_{C_6} exceeds −7.2 volts, the V_4 cathode becomes more negative than the plate and the diode conducts. When conductive, a diode has relatively low resistance and resistor R_9 and the V_4 plate resistance form a voltage divider from the negative plate of C_6 to the −7.2 volt termi-

A combination oscilloscope and sweep generator designed specifically for TV receiver alignment.

Courtesy Philco Corporation

nal. The i-f agc line is connected to the junction between V_4 and R_9, therefore, when V_4 is conducting, the voltage applied to the i-f amplifier grids will be only a fraction of the total voltage across C_6. That is, after e_{C_6} reaches -7.2 volts, there is a considerable reduction in the rate of agc voltage rise.

The V_3 diode plate circuits prevent changes in agc voltage due to high amplitude transient voltages arising from automobile ignition "noise," etc. Such voltages cause sudden heavy conduction of the agc detector, and the voltage drop e_{R_2} becomes sufficiently high to make the diode plates of V_3 positive with respect to the cathode. The resulting electron flow, from the cathode to the diode plates, cause voltage drops across R_2, R_3, R_4, R_5 and P_1; all of which are of a polarity which tends to make the grid negative with respect to the cathode and prevent a rise of V_3 triode plate current.

The agc circuits just described are fairly satisfactory when all stations can be received with minimum noise and when changes in signal strength occur slowly. The filter networks that smooth out the agc voltage must have RC time constants sufficiently long to remove the 60 cycles per second vertical synchronizing pulses. Therefore, when the changes in signal strength occur in about 1/60 of a second, or faster, the bias voltage does not change at all.

Another serious drawback is present when the noise level is very high. The noise itself produces a more negative bias and thus reduces the gain of the controlled stages. In areas where a weak signal station is received with a high level of noise, there is a tendency to suppress the television signal altogether, since the noise can produce a bias voltage so large that the already weak signal does not receive sufficient amplification.

Keyed AGC

In an effort to overcome these drawbacks, a fast acting agc circuit has been developed. Known as KEYED AGC, this system employs a pentode type tube, the plate voltage of which is obtained from a pulse developed in the horizontal sweep circuit during the flyback interval. Thus, the tube conducts for only a brief instant and develops an agc voltage that is proportional to the sync pulse amplitude and is relatively independent of the noise voltage superimposed on the received signals.

The agc voltage smoothing filter must have an RC time constant only long enough to remove the horizontal sweep frequency, which is 15,750 cycles per second. This short time constant permits the keyed agc circuit to have a fast action.

One important requirement of the keyed agc system is that the composite video signal must be applied to the agc tube so that the sync pulses have positive polarity, that is, the video signal must have negative picture phase.

Another important requirement is that the d-c component be present in the composite video signal applied to the agc tube, otherwise the grid voltage is not the same during each successive flyback period. When the video signal passes through a capacitor, the d-c component is removed and all the sync pulses are no longer at the same level.

To obtain proper operation of this circuit, it is connected to the plate circuit of a video amplifier as shown in Figure 11, where V_3 is the agc tube and V_2 the video amplifier tube. The d-c component of the composite video signal is retained by employing direct coupling between the detector, V_1, and the video amplifier V_2.

Although capacitive coupling could be employed between V_2 and the picture tube cathode, in this circuit direct coupling is provided by R_9. C_6 is connected in parallel with R_9 to provide high frequency compensation. Except for contrast control P_1 and resistor R_7, the V_1 and V_2 circuits are conventional, with high frequency compensation provided by L_2, L_3, L_4 and L_5 as described in the lesson on video frequency amplifiers.

Potentiometer P_1 is employed to vary the screen grid voltage of V_2 and thus to vary the amplification of this stage. When the slider is moved toward the junction of R_7 and P_1, the screen grid voltage is increased, and this increases the tube transconductance and the stage gain. As the slider is moved toward the junction of P_1 and R_8, the screen grid voltage is reduced so that the transconductance and stage gain are decreased.

R_7 has a low resistance and is connected in series with R_6 to provide the desired amplitude of composite video signal for the agc tube. The V_3 cathode is connected to the junction of R_7 and P_1 and is 140 volts positive with respect to ground. Connected through isolating resistor R_{11} to the junction of R_6 and R_7, the V_3 control grid is negative with respect to the cathode. R_7 is chosen so that the voltage drop across it biases V_3 nearly to cutoff. The screen grid is supplied with a positive 220 volts, while the plate is connected to ground through resistors R_{12}, R_{13}, R_{14} and R_{15}. Therefore the only current in V_3 is a small screen current.

Capacitor C_7 and coil L_6 are connected in series between the V_3 plate and ground. Physically, L_6 is wound on top of the horizontal size control coil L_7, which is connected across part of the horizontal output transformer secondary.

During the horizontal flyback interval, a sharp voltage pulse is developed across L_7 and, by transformer action, across L_6, which is connected so that the pulse is positive on the ungrounded end. Applied through C_7 to the V_3 plate, this pulse has sufficient amplitude to cause V_3 plate current, with electrons flowing from the V_3 cathode to plate and then to the negative plate of C_7. From the other plate of C_7, electrons flow through L_6 to ground, through the power supply to the +140 volt point and then back to the V_3 cathode.

During the period of the sharp pulse on the V_3 plate, the synchronizing pulse, which is part of the composite video signal, appears on the V_3 grid, thus making it more positive and permitting more plate current. Thus the amount of plate current and the charge acquired by C_7 during the sharp plate voltage pulse, depends on the horizontal sync pulse amplitude.

During the interval between the V_3 plate voltage pulses, C_7 discharges through the filter consisting of R_{12}, R_{13}, R_{14}, R_{15}, C_8 and C_9 and through L_6, in a direction such that the junction of C_7 and R_{12} becomes negative with respect to ground. The values of these resistors are chosen so that the desired agc voltages develop, and then the capacitance of C_8 and C_9 are chosen so that the time constants are long enough to remove the horizontal sweep frequency pulse. To control the gain of the r-f and i-f amplifiers, bias voltages are obtained from the filter as shown in Figure 11.

When the signal strength at the receiver antenna decreases, the amplitude of the sync pulses applied to V_3 also decreases. This results in a decrease in the V_3 plate current so that C_7 is charged to a lower value, less bias voltage is developed, and the gain of the controlled stages is increased to compensate for the loss in signal strength.

On the other hand, when the received signal strength increases, the amplitude of the sync pulses on the V_3 grid also increases. Then C_7 is charged to a higher voltage by the increased V_3 plate current so that the higher bias reduces the gain of the controlled stages.

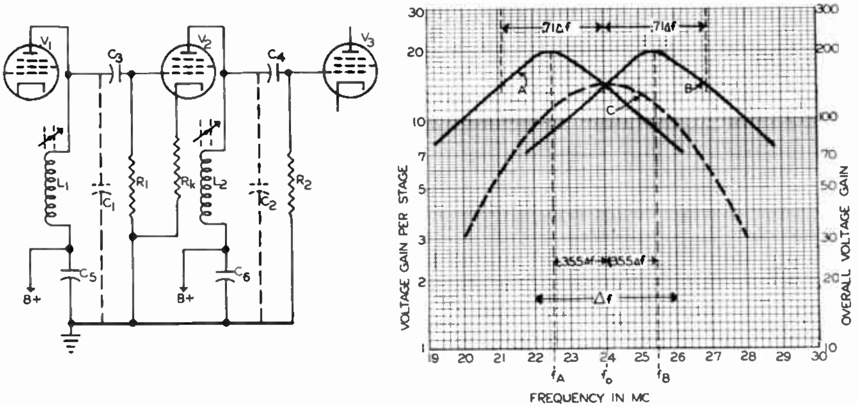

FIGURE 5

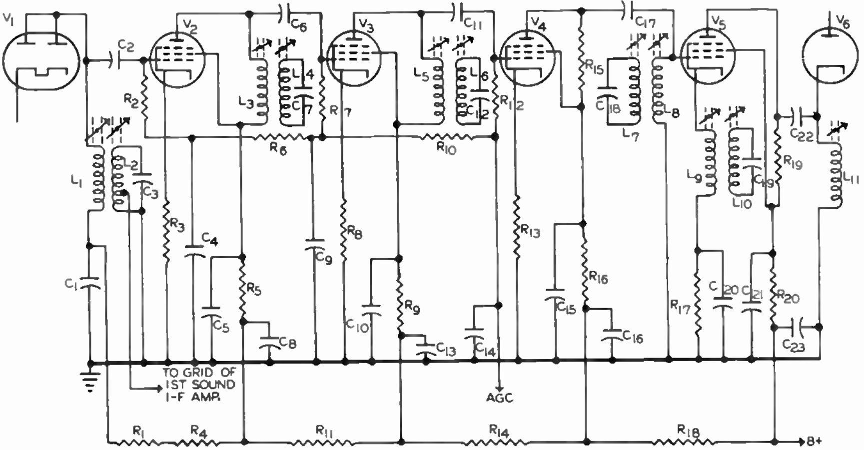

FIGURE 6

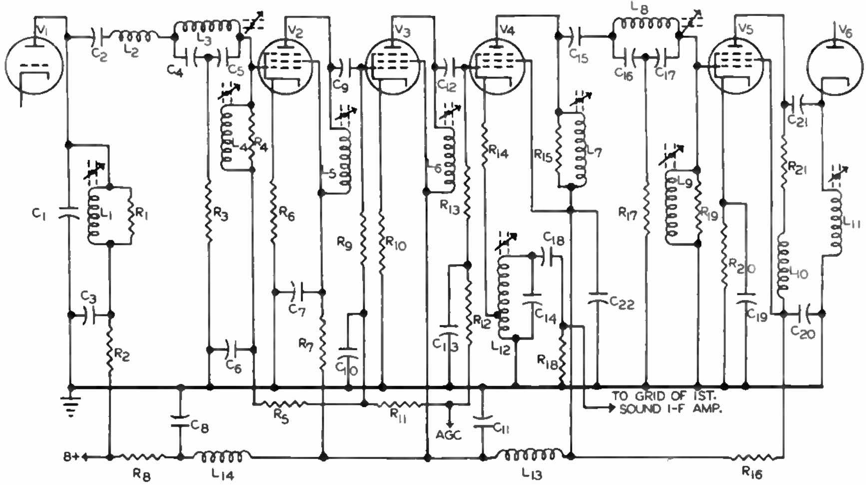

FIGURE 7

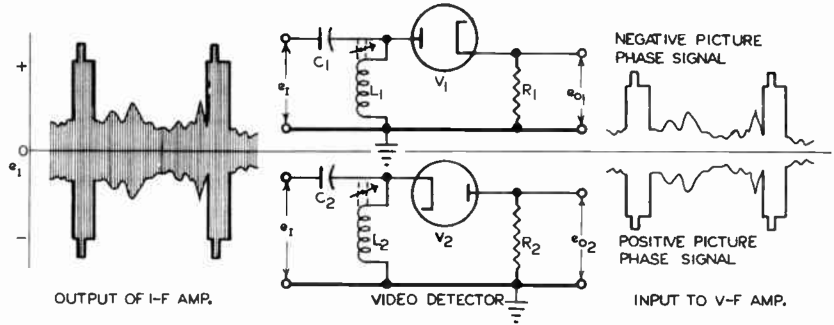

FIGURE 8

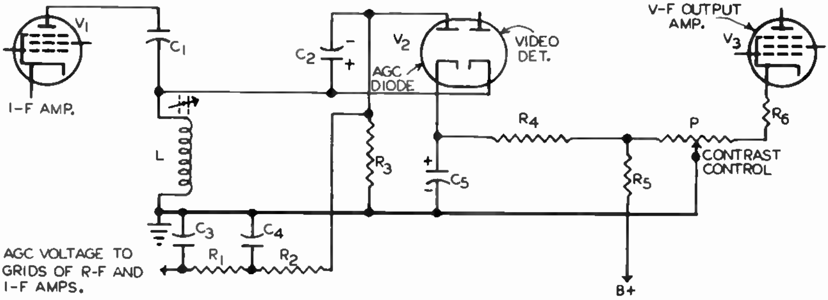

FIGURE 9

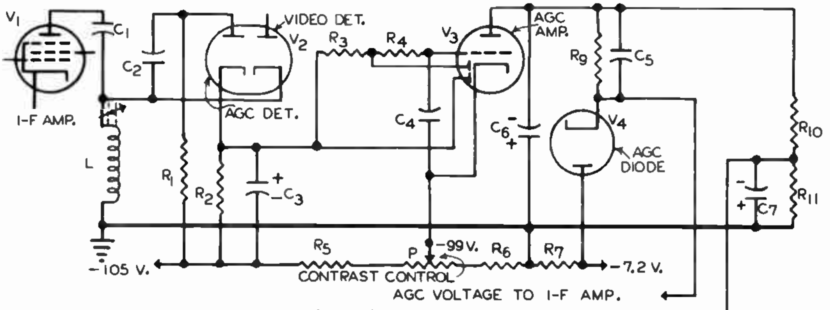

FIGURE 10

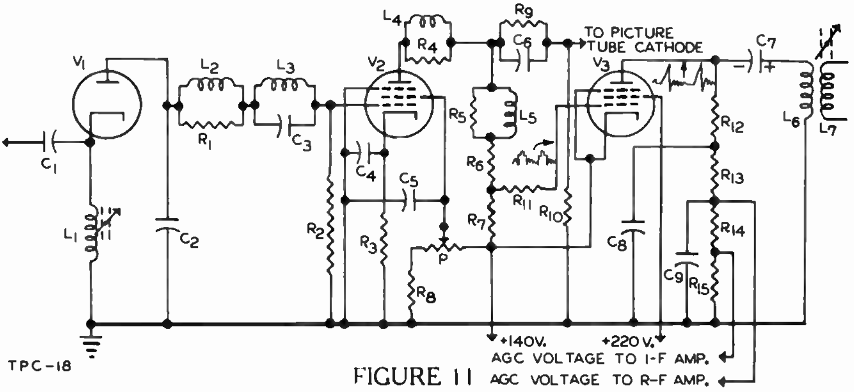

FIGURE 11

TPC-18

STUDENT NOTES

Ans...

....

4. What is the reason for the slope at the high frequency end of a typical video i-f amplifier response, like that of Figure 1?

Ans...

....

5. What two methods of interstage coupling are employed widely in television receiver video i-f amplifiers?

Ans...

....

6. In the partial circuit arrangement of Figure 2B, why is capacitor C_b required?

Ans...

....

7. List two advantages of the interstage coupling method of the partial circuit of Figure 5A.

Ans...

....

8. When a one stage video amplifier is used between the detector and picture tube cathode, what must be the picture phase of the detector output?

Ans...

....

9. In a television receiver automatic gain control circuit, is the developed bias proportional to the average or peak value of the video carrier?

Ans...

....

10. List two important requirements of the keyed agc circuit.

Ans...

....

DeVRY Technical Institute

Formerly DeFOREST'S TRAINING, INC.

4141 WEST BELMONT AVENUE CHICAGO 41, ILLINOIS

QUESTIONS

TV Receiver Video Channel—Lesson TPC-18A

4

How many advance Lessons have you now on hand?

Print or use Rubber Stamp.

Name
Student No.
Street
Zone
Grade
City
State
Instructor

Write your answers on the "Ans." line below each question. If more space is needed use reverse side of this page.

1. Considering signal-to-noise ratio and picture detail, within what band pass frequency range are commercial television receivers generally designed?

Ans.

2. In a television receiver, what circuit provides the most video signal amplification?

Ans.

3. In tuned circuit selection of a desired television channel, what various signals must be attenuated?

FROM OUR *Director's* NOTEBOOK

WORRY

A professional man of my acquaintance insists that he schedules all his Worrying for Wednesday afternoons. He deliberately postpones, so he says, every vexatious problem that calls for any worrying for his weekly afternoon off. But he doesn't WORRY!

"I no more get set to do my worrying", he says, "than my wife swamps me with a lot of little jobs she's been saving for me all week. By the time I get them all done, it's dinner time or it's too dark to worry or I want to go look at the Television. It simply Spoils my worryin' and I just never get any done".

Now who ever thought of a better scheme for getting out of doing a disagreeable and thoroughly needless job?

I'm for it, personally, for I've found that one never gets anywhere fretting and stewing over something that probably won't happen anyway.

Anything I think worth Worrying about, I consider to be Important enough to DO something about and my conscience usually sees to it that I get it Done.

Yours for success,

W. C. DeVry

DIRECTOR

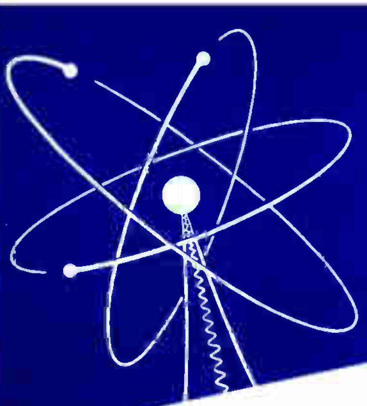

TV RECEIVER SOUND CHANNEL

Lesson TPC-19A

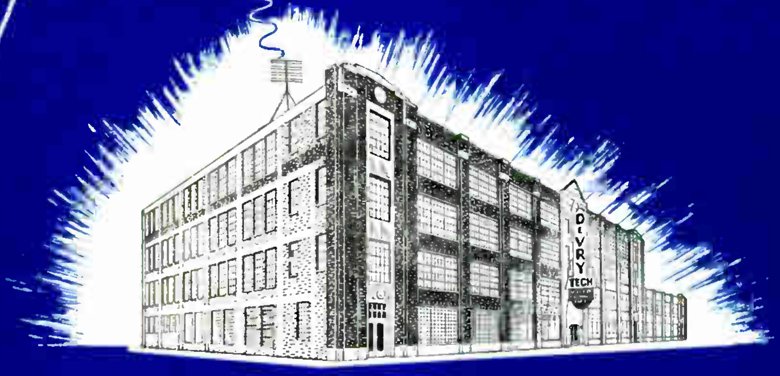

DeVRY Technical Institute

4141 W. Belmont Ave., Chicago 41, Illinois

Formerly DeFOREST'S TRAINING, INC.

TPC-19A

TV RECEIVER
SOUND CHANNEL

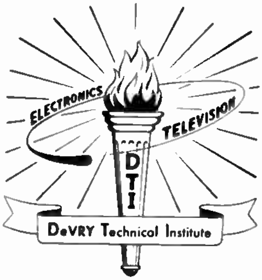

4141 Belmont Ave.
Chicago 41, Illinois

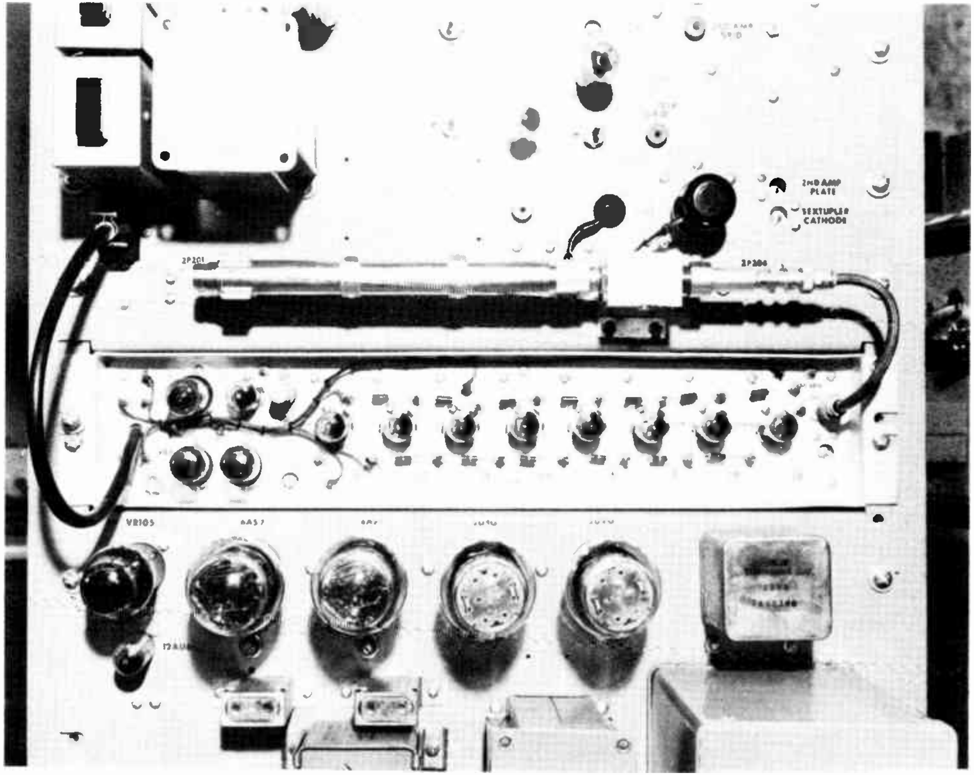

The i-f strip used in television relay equipment. The i-f tubes and circuits are placed in a straight line to reduce interaction between stages.

Courtesy General Electric Co.

Television

TV RECEIVER SOUND CHANNEL

Contents

Who shoots at the midday sun, though he be sure he shall never hit the mark, yet as sure he is he shall shoot higher than who aims but at a bush.

—Sir Philip Sidney

SOUND CHANNEL

THE CHOICE OF FM FOR TV SOUND

In the early types of television transmitters, amplitude modulation was used for both sound and video transmission. When later developments gave promise of wide public interest in television, the Federal Communications Commission saw the growing need for standardization. As a result, the National Television System Committee was formed and began a study of the problem with the view of establishing standards which would encourage and facilitate future development of the art.

Among the proposals offered during a study of sound transmission possibilities, was that of changing from AM to FM. The problem was considered from the standpoint of both transmission and reception. The cost of an AM modulator, for example, becomes increasingly great as the power of the transmitter is increased. On the other hand, in frequency modulation, the cost of the modulator is almost independent of the transmitter power output. That this is the case is not surprising since in FM the modulator is merely required to vary the frequency and does not have to be able to handle an appreciable amount of power. A transmitter of high power output would cost less with FM than with AM sound.

Another point considered was that for even more satisfactory reception, the FM carrier strength does not need to be more than half that of an AM carrier. This means that for the same signal-to-noise ratio, the FM carrier power for sound could be much less than that required for AM sound. Even when it is made half as great, a 17 db improvement in the signal-to-noise ratio still exists.

By way of a disadvantage, it was pointed out that the cost of an FM receiver is greater than that of an AM receiver, and therefore the customer would have to pay more. At the time this matter was being considered, FM broadcast transmission covered the frequency range of 42 to 50 megacycles. It was suggested that the sound section of the receiver could be designed to cover the FM broadcast band, thereby permitting the owner to listen to FM broadcasts with the same receiver. This led to an early suggestion to standardize on a frequency deviation of ±75 kc for TV sound which would make it the same as used for the regular FM broadcast.

The use of FM for TV sound was eventually adopted, but a frequency swing of ±25 kc was to be considered as 100% modulation with a transmitter designed to operate satisfactorily with a frequency swing of not less than ±40 kc. At about the same time, the FM broadcast band was changed from the 42-50 mc region and the frequencies from 88 to 108 mc were designated for this purpose.

In this lesson, attention is concentrated on the various stages of the sound channel and little is devoted to other parts of the receiver. Inasmuch as certain stages of the sound channel are very similar to those of FM receivers previously studied, a review of fundamental principles involved in limiters, sound detectors, pre-emphasis, de-emphasis, and heterodyne action are given.

PRE-EMPHASIS

The higher frequency components of speech and music normally have less amplitude than the lower frequency components. This means that if the noise level is the same, regardless of the audio frequency, the signal-to-noise ratio is lower for a high frequency audio voltage than for one of low frequency. Also, if noise inherent in the transmitter is greater at the higher audio frequencies, the relative signal-to-noise ratio is still lower. If nothing is done to improve this condition, the quality of the higher frequency audio reproduction at the receiver is impaired.

At the transmitter, steps are taken to improve the high frequency signal-to-noise ratio by accentuating the high frequency components of the audio modulating voltage. The FCC has stated that PRE-EMPHASIS SHALL BE EMPLOYED IN ACCORDANCE WITH THE IMPEDANCE-FREQUENCY CHARACTERISTIC OF A SERIES INDUCTANCE-RESISTANCE NETWORK HAVING A TIME CONSTANT OF 75 MICROSECONDS.

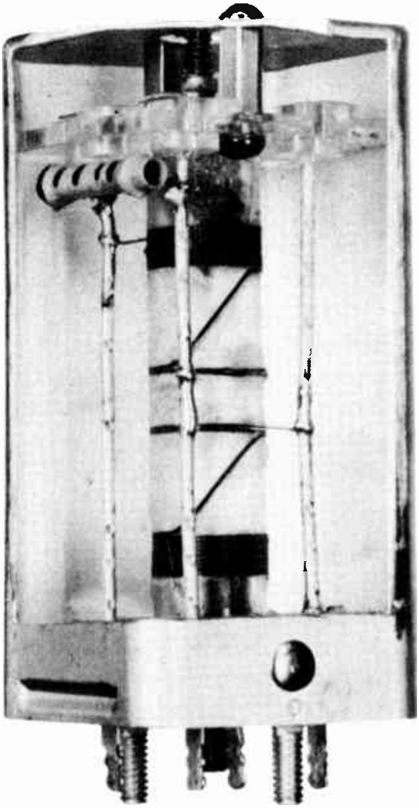

A cut away view of an i-f transformer. Where high frequency i-f's are used the coils have low inductance. Hence, very little wire is required.

Courtesy National Co., Inc.

As a concrete example to illustrate just what this statement means, assume that the audio voltage is impressed upon terminals (1) and (2) of the circuit composed of a 75,000 ohm resistor in series with an inductor as illustrated in Figure 1A. If the correct inductance is chosen, the audio modulating voltage taken from terminals (3) and (4) has the higher frequencies accentuated as required.

The correct inductance, L, will be such that the time constant, L/R, will be 75 microseconds. If $L/R = 75$ microseconds, or 75×10^{-6} seconds, then $L = R \times 75 \times 10^{-6} = 75{,}000 \times 75 \times 10^{-6} = 5.625$ henrys. The two series elements of R and L serve as a voltage divider, and if the higher frequencies are accentuated, the voltage across L must be higher at the high frequencies than at the low for a given input voltage at terminals (1) and (2).

To see how the output voltage varies with frequency, a constant input voltage is assumed, and the frequency is varied from 50 to 15,000 cycles a second and the output voltage across (3) and (4) is computed in percentage of the input voltage.

At 4000 cycles per second, for example, the inductive reactance of L is:

$$X_L = 2\pi fL = 6.2832 \times 4000 \times 5.625 = 141{,}372 \text{ ohms.}$$

Assuming that the inductor has negligible resistance and that it presents pure inductive reactance to the circuit, the total impedance, Z, across R and L in series can be obtained from the triangular relation shown in Figure 1B.

$$Z = \sqrt{R^2 + X_L^2} = \sqrt{75{,}000^2 + 141{,}372^2} = 160{,}035 \text{ ohms.}$$

The voltage across terminals (3) and (4) in percentage of a constant input voltage, at 4000 cycles per second is:

$$E = 100 \times \frac{141{,}372}{160{,}035} = 88\% \text{ of the input voltage.}$$

When the input is 10 volts, the output is 8.8 volts. This is only one example of the method used to compute the accentuated output voltage. A better picture of the manner in which the output voltage varies with frequency can be obtained from the solid curve of Figure 2.

At 50 cycles per second the output voltage is a little less than 2.5% of the input voltage. At 200 cps it increases to nearly 10%, after which it rises rapidly, but starts flattening out below 4000 cps, and at 15,000 cps, it is slightly below 100% of the impressed voltage.

The graphical method used by the FCC to specify the required pre-emphasis characteristic is shown in Figure 3. A circuit similar to Figure 1 is used in which the impedance, Z, is the vector sum of the resistance and the inductive reactance. The time constant is, of course, 75 microseconds. The points for the solid line curve are obtained from the following relation:

$$db = 20 \log Z/R$$

As an example of the calculation, for one point on the solid curve, assume a frequency of 4000 cycles. As in the previous calculation, the inductive reactance due to 5.625 henrys is 141,732 ohms at 4000 cps, and the vector sum of this value and the 75,000 ohms resistance in series gives an impedance of 160,035 ohms. The calculation is then:

$$db = 20 \log \frac{160{,}035}{75{,}000} = 20 \log 2.134 = 20 \times .329 = 6.58 \text{ db.}$$

This checks with the point on the curve.

In all the foregoing calculations, the use of a 75,000 ohm resistor and a 5.625 henry inductor has no particular significance insofar as practical values for pre-emphasis filters are concerned. It is the relative values of resistance and inductance which must be chosen correctly to give the desired 75 microsecond time constant.

The reason for the two curves in Figure 3 is to specify the upper and lower limits of pre-emphasis. In other words, for any particular transmitter, the curve for the pre-emphasis network must lie between the limits indicated by these two curves. Between 100 and 7500 cycles per second, the two curves are 3 db apart. This difference al-

The 6AU6 often is used in the TV sound i-f amplifiers.

Courtesy Hytron Radio and Electronics Corp lows some latitude in the design of pre-emphasis filters for emphasizing the higher frequencies and improving the signal-to-noise ratio.

DE-EMPHASIS

The transmitted sound signal has been purposely distorted by the pre-emphasis filter network and unless this distortion is removed at the receiver, the sound from the loudspeaker is not natural. After the frequency deviations due to modulation have been converted to audio amplitude variations by the sound detector, the high audio frequencies must be de-emphasized or attenuated. Since this action also reduces the higher frequency noise voltages, it provides the desired over-all noise reduction.

A receiver de-emphasis filter can be designed to use either a resistor and an inductor, or a resistor and a capacitor. As a capacitor is lighter, requires less space, and in most cases is less expensive than the inductor, the capacitor is used most commonly.

A de-emphasis filter consisting of a resistor and a capacitor in series is shown in Figure 4. In actual practice, the time constant, RC, is made approximately equal to the time constant L/R of the transmitter pre-emphasis filter, so that the higher audio frequencies are attenuated to the correct proportional level that exists at the transmitter microphone.

The reactance of capacitor C decreases with an increase in frequency, while the resistance of R remains constant. Therefore, as the frequency of the input voltage is increased, a smaller percentage of the input voltage amplitude appears across capacitor C. This is just the reverse of the process in the transmitter, and the combined action of pre-emphasis and de-emphasis accomplishes an improvement in signal-to-noise ratio yet leaves the audio output as a good reproduction of the audio input at the transmitter.

When the time constant, RC, of the network shown in Figure 4 is 75 microseconds and the resistance of R is 75,000 ohms, the correct capacitance for C can be computed from the relation:

$$\text{Time Constant} = RC = 75 \times 10^{-6} \text{ seconds}$$

$$75{,}000 \times C = 75 \times 10^{-6}$$

$$C = \frac{75 \times 10^{-6}}{75{,}000} = .001 \times 10^{-6}$$

farads or .001 microfarad.

If the output voltage at terminals (3) and (4) in percentage of the input voltage is plotted against frequency for a constant input, the dashed curve of Figure 2, which is marked "de-emphasis," is the result. While this curve is not exactly the inverse of the pre-emphasis curve, it is close enough for practical purposes. Later in this lesson when receiver circuits are analyzed, the pre-emphasis filters are pointed out and the R and C values used are listed.

THE LIMITER

A limiter is used to clip FM signal peaks and remove portions of signal due to amplitude modulation. Noise voltages picked up by the antenna or transmission line add to the amplitude but do not affect the frequency. The limiter is designed so that the signal drives the tube to cutoff on the negative peaks and to saturation on the positive peaks, and for good limiting action the signal should be strong enough to drive the tube to both cutoff and saturation.

In a limiter circuit like that shown in Figure 5, low screen grid and plate voltages are used so that saturation occurs at relatively low input voltages. If weak antenna signals provide an output voltage from the last i-f stage, sufficiently strong to overdrive the limiter tube, very good limiting results and distortion due to interference is low.

Even the best limiter cannot reduce distortion to zero, however, but it can reduce that due to amplitude modulation to a minimum. A certain amount of undesirable phase modulation still may be present in the output of the transmitter and may show up as frequency variations in the receiver and cause distortion in the audio output. The limiter can do nothing with this but with improvements in transmitters it becomes a matter of decreasing importance.

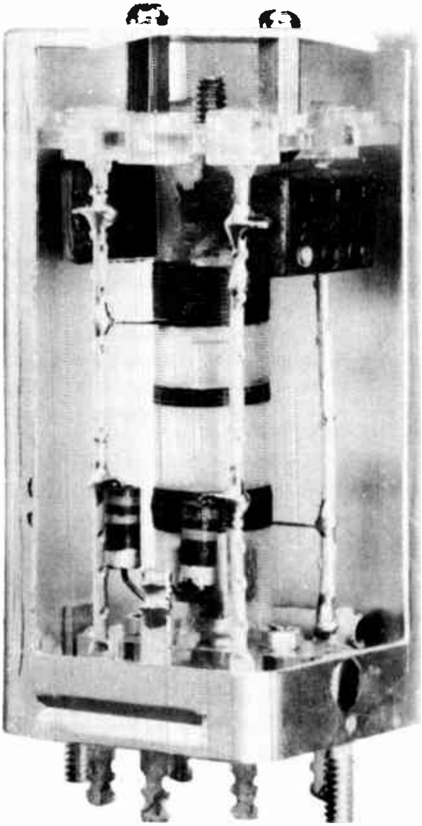

A cut away view of a ratio detector transformer. Note the tertiary between the primar, and secondary windings.

Courtesy National Co., Inc.

THE DISCRIMINATOR

A schematic diagram of the phase shift or the FOSTER SEELEY DISCRIMINATOR is given in Figure 6.

The output from the limiter tube V_1 is passed on by the transformer to the circuit of the two diodes V_2 and V_3. Both the primary and the center-tapped secondary of the discriminator transformer are tuned to the center intermediate frequency.

Capacitor C_2 is used for coupling and has low reactance at the signal frequency. Inductor L_4 is an r-f choke, but sometimes it is replaced with a resistor. The load resistors R_1 and R_2 have equal resistance and the capacitances of C_4 and C_5 are equal.

The signal voltage from the limiter is impressed across L_4 and the voltage induced in the transformer secondary is impressed upon the diode plates. Due to the fact that the high voltage end of L_4 is connected to the center tap of the transformer secondary, the voltage across L_4 adds vectorially to the voltages induced in the two halves of the transformer secondary.

The discriminator action is such that at center frequency the voltages across load resistors R_1 and R_2 are equal and opposite and the audio output voltage is zero. This is shown in the vector diagram of Figure 7A where the voltage on diode V_2 is the vector sum of the voltage E_1 and the voltage E_2 in the upper half of the secondary. When the polarity at the upper end of the secondary is positive, that at the lower end will be negative, therefore voltages E_2 and E_3 are shown 180° out of phase.

At the center frequency, the voltage impressed on diode V_2 is equal to that on diode V_3 and the IR drops across load resistors R_1 and R_2 are equal. Since these two voltages are equal and of opposite polarity, the sum is zero and there is no output voltage at the center frequency.

When the signal frequency increases, the phase of voltage E_2 and E_3 shift with respect to E_1 as in Figure 7B. Now, when the voltages add vectorially, E_1+E_2 is appreciably greater than E_1+E_3. As a result, the drop across R_1, Figure 6, is greater than that across R_2 to provide a positive output voltage.

If the modulation decreases the signal frequency, voltages E_2 and E_3 shift in the opposite direction and the result of the vector addition is a larger voltage on diode V_3 than on diode V_2. This makes the IR drop across R_2 greater than that across R_1. As the negative end of R_2 is toward the audio output terminal, the result of a decrease in signal frequency is a negative output voltage.

By the foregoing action, frequency deviations are changed to audio output voltages. The time constants of R_1C_4 and R_2C_5 are long enough so that they do not follow voltage variations at an r-f rate and yet short enough to fol-

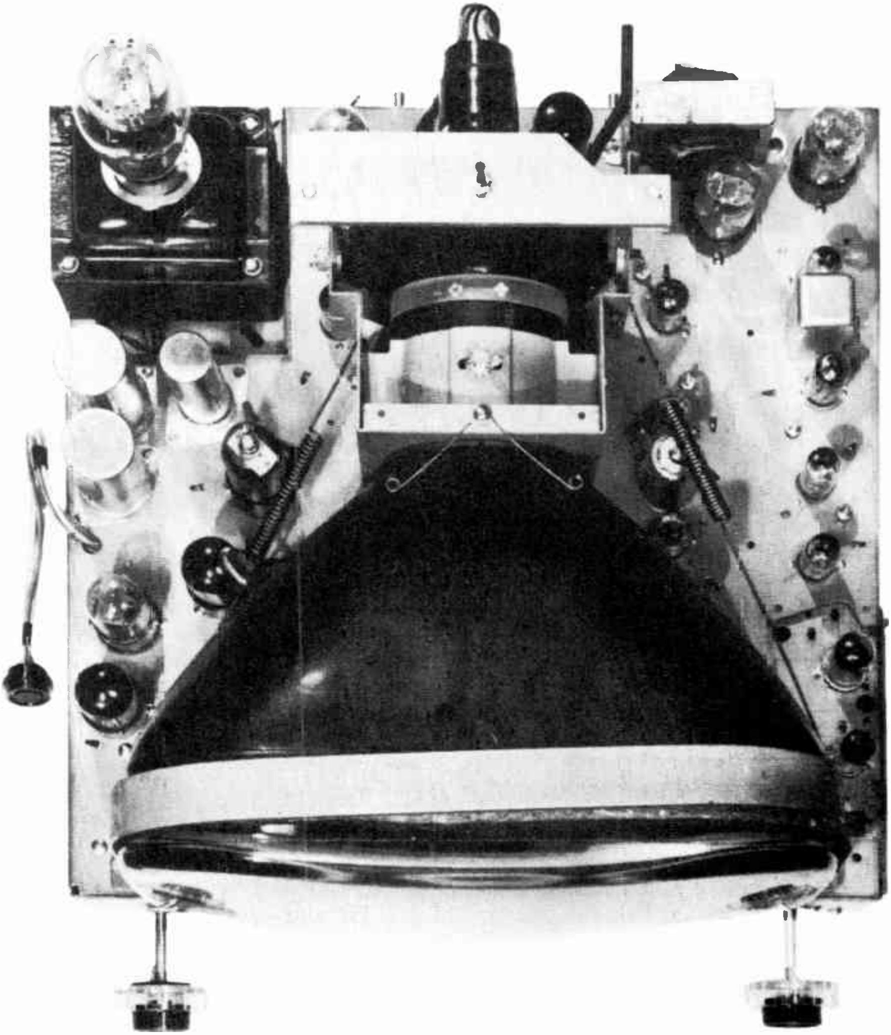

The top chassis view of a typical intercarrier receiver. The sound and video i-f's are on the right side.

Courtesy Motorola Inc.

low variations at the highest audio rate. Since this type of discriminator responds also to amplitude modulation, it must be preceded by a limiter stage to reduce the noise to a minimum.

THE RATIO DETECTOR

The RATIO DETECTOR shown in Figure 8A is similar in many respects to the discriminator of Figure 6, but there are important differences. In Figure 6 the voltage E_1 across L_4 is obtained from the plate circuit of tube V_1 through capacitor C_2. In Figure 8 a corresponding voltage is needed across L_3 and while it can be obtained through a capacitor from the plate circuit of the preceding stage, in this particular circuit it is obtained by coupling L_3 inductively to L_1. Both methods are in use with similar results.

Another difference in the two circuits, and one which makes the ratio detector action different from that of the Foster Seeley discriminator, is the manner in which the diodes are connected. In Figure 6 the transformer secondary terminals each connect to the plate of a diode, while in Figure 8A one connects to a plate and the other to a cathode. The common point between capacitors C_3 and C_4 is connected to capacitor C_5, the other side of which is grounded. The common connection between resistors R_1 and R_2 is grounded direct.

The center points between the capacitors and resistors are not connected direct as in Figure 6, but are separated by capacitor C_5. This means that any difference of potential existing between these two points appears also across capacitor C_5, one side of which is connected to the audio output and the other is grounded.

Due to the manner in which the diodes are connected, the voltages across R_1 and R_2 as well as across C_3 and C_4, act in the same direction with the polarities as indicated in Figure 8A. At the center intermediate frequency, to which the transformer is tuned, the charges on C_3 and C_4 are equal as are the voltage drops across R_1 and R_2, therefore the charge on C_5 is zero.

During modulation, however, the vector relations between the diode voltages vary in a manner similar to that illustrated in Figure 7, and the charges on C_3 and C_4 will differ, depending upon whether the frequency has increased or decreased. The potential at the junction between R_1 and R_2 cannot change since this connection is grounded, but the potential at the common connection between C_3 and C_4 does change due to the difference in charges produced by modulation. Impressed across C_5, these changes cause differences of potential which correspond to the modulation and an audio output voltage is the result.

Although the charges on C_3 and C_4 vary with modulation, the sum of the two voltages on these capacitors is held constant for a given carrier strength by capacitor C_8 which is sufficiently large that its charge does not change noticeably with audio variations in the circuit. The time constant of C_8 and resistors R_1 and R_2 is usually .1 of a second or more. Thus C_8 has a stabilizing action on the circuit and the charge on it varies only with the changes in the strength of the carrier and not with modulation or noise voltages.

The upper end of C_8 is negative and as the voltage across it is quite constant for a given signal carrier strength, this negative voltage can be used for automatic volume control. The full avc voltage is not available, however. R_1 and R_2 act like a voltage divider and, since they have equal resistance, the available avc voltage is half of the total.

The sum of the voltages across C_3 and C_4 is constant for a given carrier strength, but the individual voltages vary at an audio rate due to modulation. This means that the ratio of the two voltages changes with modulation or the audio output is a function of the ratio between the two voltages. This is the basis for the name ratio detector.

Resistor R_3 and capacitor C_6 provide a time constant close to 75 microseconds and, therefore, function as a de-emphasis filter. With a resistance of 38,000 ohms for R_3 and a capacitance of .002 μfd for C_6, the time constant is 76 microseconds. Capacitor C_7 is used to couple the output to the audio amplifier.

Unlike the BALANCED RATIO DETECTOR of Figure 8A, the one shown in Figure 8B is unbalanced to ground. This circuit uses a single resistor R to replace R_1 and R_2 of Figure 8A. Capacitor C_4 is for stabilization and acts very much as C_8 of Figure 8A. In this circuit there is no voltage divider to reduce the avc voltage, therefore, the full voltage is used for the purpose.

Capacitor C_5 is common to both diodes and during modulation each diode tries to charge it at opposite polarities. The magnitude of each charge depends upon vector relations similar to those of Figure 7 and the net result is an audio output voltage proportional to the frequency deviation. The de-emphasis filter and coupling capacitor are omitted from the drawing but they are identical to those in Figure 8A.

HETERODYNE ACTION

When two signals of different frequency are mixed in a detector, one of the important results is a third frequency which is the difference of the two. In a superheterodyne radio receiver, for example, the incoming signal is mixed with the voltage from a local oscillator, and by heterodyne action, the result is a third voltage having a frequency equal to the difference in the two frequencies but containing the original modulation of the signal.

When the two voltages – the signal and that from the local oscillator—are of about the same amplitude, the magnitude of the resultant voltage at the difference frequency is a function of the magnitude of both the signal voltage and that of the local oscillator. This is shown in Figure 9A where the two voltages E_S and E_V produce an envelope which pulsates at the difference in the two frequencies. The envelope represents a rather poor sine wave or one with a large distortion. If the pulsations are at an audio frequency, rectification would produce an audio voltage having a frequency equal to the pulsation rate and an amplitude equal to one of the voltages if they are equal.

In Figure 9B, the signal voltage E_S is made only about 30% as large as E_V, the voltage with which it beats. There are two outstanding characteristics of the voltage resulting from the heterodyne action in this case. One is that the audio component has an amplitude equal to that of the signal voltage E_S and apparently is little affected by the magnitude of E_V, and the other is that the edges of the envelope approach very closely to a sine wave in shape. In other words, when the signal voltage is small in comparison to the local oscillator voltage, the resultant heterodyne voltage contains a lower distortion and is less affected by the amplitude of the local oscillator voltage.

These relations are pointed out again when a receiver employing the intercarrier sound system is described. In such a receiver the video carrier voltage and that of the sound are heterodyned in the video detector to produce a new sound carrier of 4.5 mc. When the sound carrier voltage is kept small relative to that of the video, the new 4.5 mc sound carrier contains little amplitude modulation due to the video carrier variations.

THE DUAL CHANNEL SOUND SYSTEM

The dual channel sound system, or, as it often is called, the conventional sound system, is illustrated in the block diagram of Figure 10A. Here the sound signal is taken off at the output of the first amplifier following the mixer. Actually, it may be taken off there or later, or immediately following the mixer. The procedure differs with various manufacturers, so also does the number of stages used in both the video and the sound section.

Since the various methods of separating the sound from the video were taken up in an earlier lesson, little attention is devoted to this matter here. In the dual channel system, one or more sound i-f amplifiers are used, followed by a limiter stage if the sound detector is responsive to amplitude variations.

When the sound i-f stages are sharply peaked at the center frequency, an appreciable amount of amplitude modulation is added to that already present in the i-f signal. Although steps are taken in later stages to minimize amplitude distortion, there is something to be gained by designing the i-f stages to produce a response curve that is reasonably flat-topped over a frequency range of something like 200 kc. This seems quite broad in view of the fact that the deviation representing 100% modulation is only ±25 kc. By making the response broad, however, the stability is improved and a limited amount of mistuning does not impair reception. Also, the local oscillator vernier frequency control can be adjusted to give a good picture without impairing the sound reproduction.

Broadening of the i-f response curve may be accomplished by placing resistors across the i-f transformer windings, by over-coupling or by stagger tuning. Resistance loading lowers the Q of the tuned circuit and broadens the response with a sacrifice in gain. However, when the gain is lowered too much, additional amplification is required.

When the coupling between the primary and secondary of a transformer is increased beyond critical coupling, the response curve has two peaks, one above and one below the resonant frequency. This broadens the response, but it leaves a dip at the resonant frequency which may be relatively low if the degree of overcoupling is great. If another stage is employed and adjusted to give a single peak at the resonant frequency, the over-all response curve will be broad and much flatter than that of the overcoupled stage alone.

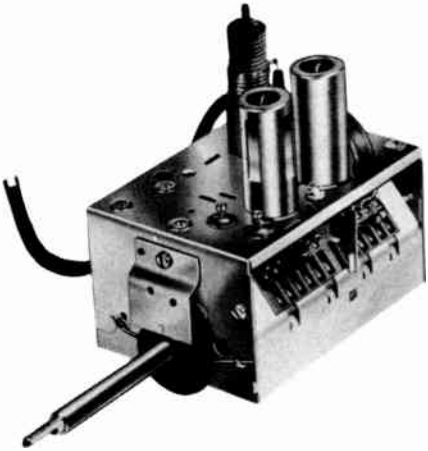

Separate outputs for video and sound i-f's are provided on this dual channel tuner by mounting the first i-f coil and the sound trap on the tuner chassis.

Courtesy Standard Coil Products Co.

Broad response also may be obtained by stagger tuning. In this method, one stage is tuned to the resonant frequency, another is tuned slightly higher and still another is tuned slightly lower than the resonant frequency. The overall response represents the combined effects of all three and can be made quite broad. In general, the required band width for the sound i-f stages is quite easily attained as it is narrow compared to that of the video and stagger tuning is not required.

The sound channel circuit of Figure 11 is a good practical example of a dual channel sound system. All tubes except the type 25L6GT beam power amplifier in the audio output stage are miniatures. The sound is taken off the mixer output circuit by use of an i-f sound trap and take-off coil transformer, not shown in the diagram.

The 21.6 mc sound i-f signal is impressed on the grid of the type 6BA6 tube V_1, which is the first sound i-f amplifier. This miniature tube is designed for wide band high frequency applications. It has low grid-plate capacitance and its high transconductance provides a high signal-to-noise ratio. The 100 ohm cathode biasing resistor R_2 is left unbypassed to provide broader frequency response.

In the plate circuit of the first sound i-f amplifier tube V_1, coil L_1 is adjustable. It is adjusted so that the inductance resonates with the distributed capacitance of the coil and the capacitance added by the plate circuit and the tube. Tuning is broadened by the 22,000 ohm SWAMPING RESISTOR R_4. The voltage developed across L_1 is impressed on the grid of the second sound i-f tube V_2 through the coupling capacitor C_2.

In the second sound i-f stage, bias is provided by the cathode resistor R_7, bypassed by capacitor C_4. Transformer T_1 has both primary and secondary tunable and it passes the i-f signal on to the grid of the limiter tube V_3. This is a sharp cutoff, miniature, pentode designed for high frequency, wide band amplification, and limiting.

Like the two i-f tubes, V_3 obtains its plate and screen voltages through dropping resistors from the 150 volt supply line. The dropping resistors for the limiter, however, are sufficient to drop the plate and screen voltages for V_3 to about 54 volts. This low voltage together with a low control grid bias of $-.3$ volt provides limiting action in this stage and reduces the noise peaks.

After the i-f signal voltage has been limited it is passed on by the discriminator transformer T_2 to the two plates of the miniature discriminator tube V_4, a tube specifically designed for use in this type of circuit. An examination of this discriminator circuit reveals that it is very similar to the one in Figure 6, the chief difference being that it uses a resistor R_{13} in place of the r-f choke L_4 of Figure 6.

The vector relations, too, are like those of Figure 7 as the frequency varies due to modulation. The "S" response curve of the discriminator transformer, when tuning is correct, is about 300 kc from peak to peak.

The audio output of the discriminator still contains the high frequency pre-emphasis imparted to it at the transmitter. De-emphasis is accomplished at this point in the circuit by the series combination of resistor R_{16} and capacitor C_{17}. With a resistance of 68000 ohms for R_{16} and a capacitance of .001 μfd for C_{17}, the RC time constant is 68 microseconds. This value is sufficiently close to 75 microseconds for practical purposes.

The amplitude of audio voltage impressed on the grid of the first audio amplifier tube V_5 is manually adjusted by the 1 megohm volume control R_{17}. Tube V_5 is a type 6AT6 twin diode, high mu triode, a miniature tube recommended for use only in resistance coupled amplifiers. In this particular circuit, the two diode plates are not used. The biasing voltage is obtained through the action of capacitor C_{18} and the 10 megohm grid resistor R_{18}. The plate supply voltage for this stage is 350 volts, which provides sufficient audio output to drive the 25L6GT power amplifier.

On the schematic diagram of Figure 11, resistor R_{21} in the grid circuit of the audio power amplifier is shown connected to resistor R_{22} which in turn is connected to a -50 volt bias supply. These two resistors in series serve as a voltage divider by dropping the bias on tube V_6 to:

$$50 \times \frac{.68}{4.7 + .68} \text{ or } 6.3 \text{ volts.}$$

This bias is low for the 270 volts supplied to the plate, and therefore, an additional bias is provided by the 47 ohm cathode resistor R_{23}. By leaving R_{23} without a bypass capacitor, some degeneration results which improves the frequency response of the amplifier.

The output transformer T_3 couples the audio to the 12″ speaker. Stability of the amplifier and low frequency response are improved by the use of the 20 μfd capacitor C_{23} connected from the +270 volt supply to ground. The screen voltage is obtained from the same 150 volt line that supplies the i-f stages. The output stage is capable of delivering more than 4 watts of audio power.

The heater connections in this receiver are of interest. As Figure 11 shows, tubes V_1 to V_4 have the heaters separated by r-f choke coils and the ungrounded ends are bypassed to ground by 1500 $\mu\mu$fd capacitors. This arrangement prevents r-f coupling from one high frequency stage to another through the common heater connections.

THE INTERCARRIER SOUND SYSTEM

The block diagram of Figure 10B shows that in the intercarrier sound system the video and sound carriers are not separated near the mixer stage as in the conventional or dual channel system of Figure 10A. Instead, the two carriers combined pass through several more stages of amplification before the separation takes place. In the dual channel system the sound is diverted to the sound channel shortly after it passes through the mixer stage. This requires additional amplifiers solely for amplifying the sound signal.

The sound and video carriers differ in frequency by 4.5 mc. This frequency difference is established at the transmitter and it is not changed by the mixer in the r-f section of the receiver. Therefore the two i-f carriers are still 4.5 mc apart in frequency when they reach the video detector in an intercarrier receiver.

At the video detector a second mixing or heterodyning action takes place. The video i-f carrier can be thought of as the signal from a second local oscillator and when it heterodynes with the i-f sound signal, a difference frequency of 4.5 mc is produced. This becomes the new sound i-f carrier and is diverted to the sound channel while the video is passed on to the picture tube. In some receivers the separation takes place following the video amplifier.

In order to prevent the sound from being strongly amplitude modulated by heterodyning with the video signal, the magnitude is kept low compared to the video signal. This reasoning was explained graphically in Figure 9 and it was shown that if one of the two voltages is kept low, the amplitude of the beat frequency voltage is little affected by the larger voltage. Hence, in an intercarrier receiver, the magnitude of the video signal entering the detector should be at least ten times that of the sound signal. This results in a sound signal which is chiefly frequency modulated, for it retains the original frequency deviations accomplished at the transmitter. The small AM remaining in the sound i-f signal due to heterodyning does not normally impair reception, since limiting action either in the limiter stage or the sound detector removes it.

In some receivers the sound i-f is diverted to the sound section following the video detector, while the video is further amplified and impressed upon the picture tube. Various circuits have been used to separate the signals at the output of the detector. In other receivers both signals are amplified by the video amplifier before they are separated. The amplification is accomplished by making the video amplifier broad enough to reach up slightly above 4.5 mc.

It was pointed out that the sound i-f voltage at the detector input is kept relatively low to minimize amplitude modulation. Another reason for keeping it relatively low is that the problem of keeping the sound out of the picture will be minimized. However, this problem is usually not a difficult one since the video frequencies vary from 30 cycles to 4 megacycles while the sound i-f is 4.5 mc.

Figure 12 shows one method of separating the sound i-f and the video following amplification of both signals in the video amplifier. Transformer T_1 is tuned to 4.5 mc. The primary offers a high impedance to 4.5 mc since it is a parallel tuned circuit resonating at this frequency. The sound i-f is readily passed on to the driver for the ratio detector by the tuned secondary of transformer T_1.

The primary of this transformer does not offer a high impedance to the video signal. The response to the video frequencies is broadened by the peaking coils L_1 and L_2, and then is passed on to the picture tube. Proper design and adjustment of the circuit prevents one signal from interfering with the other.

A different method is illustrated in Figure 13 where the video circuit uses peaking coils as before. The video is taken off through capacitor C_2 which should be large enough so that it does not have too high reactance at any of the video frequencies. Capacitor C_1 and inductor L_3 form a series resonant circuit at 4.5 mc.

The 6AS5, a miniature beam power amplifier, often is used in the output stage of the sound section.
Courtesy Radio Corporation of America

Since at series resonance both the circuit elements have a relatively high voltage of the resonant frequency across them, the 4.5 mc sound voltage across L_3 is impressed on the grid circuit of the sound i-f amplifier. This inductance offers low impedance to any video frequencies that get through capacitor C_1, and conducts them to ground to prevent interference in the sound channel.

The sound section of another television receiver is given in Figure 14. Here the 4.5 mc sound i-f signal is taken off at the plate circuit of the video amplifier and impressed on the tuned circuit L_3C_3 through the coupling capacitor C_2. The impedance of the tuned circuit is high at 4.5 mc, but it is low for signals of video frequency. This allows the sound signals to be passed on to the grid of the i-f amplifier tube, but the video signals do not get through. The 4.5 mc sound is amplified and passed on to the ratio detector through transformer T_1.

At the center frequency of 4.5 mc, the audio output voltage from the ratio detector should be zero. This can be understood if the two conduction paths are traced. Electrons flow from cathode to plate in the upper diode. The rest of the circuit is through the upper half of L_5, through L_6, R_5, R_9, and C_{11} to ground, then from ground through R_6 and back to the cathode. As capacitor C_{11} charges, the ungrounded plate becomes negative.

The circuit for the lower diode is from cathode to plate, through resistor R_7 to ground, from ground through C_{11} and R_9, through R_5, L_6 and the lower half of L_5 back to the cathode. Capacitor C_{11} tends to become charged so that the ungrounded plate is positive. This is just the reverse of the condition mentioned above and since the signal voltage is at the center frequency, the same voltage is applied to both diodes and the charges on C_{11} cancel, therefore no audio output results.

When the modulation causes a deviation in frequency the action changes. Assume, for example, that the frequency swings below 4.5 mc and the vector relations are such that the voltage on the upper diode increases and that on the lower diode decreases correspondingly. With this relation existing, capacitor C_{11} has a greater negative than positive charge on it and a negative audio voltage is coupled to the volume control R_8 through the capacitor C_9.

When the frequency swings above the center frequency of 4.5 mc, the vector relation is such that the voltage on the lower diode increases and that on the upper diode decreases. This means that the positive charge exceeds the negative and a positive voltage is impressed on the volume control R_8 and through coupling capacitor C_{10} to the grid of the first audio amplifier. Hence, as the frequency varies above and below 4.5 mc, an audio output voltage is impressed on the grid of the audio amplifier tube V_1.

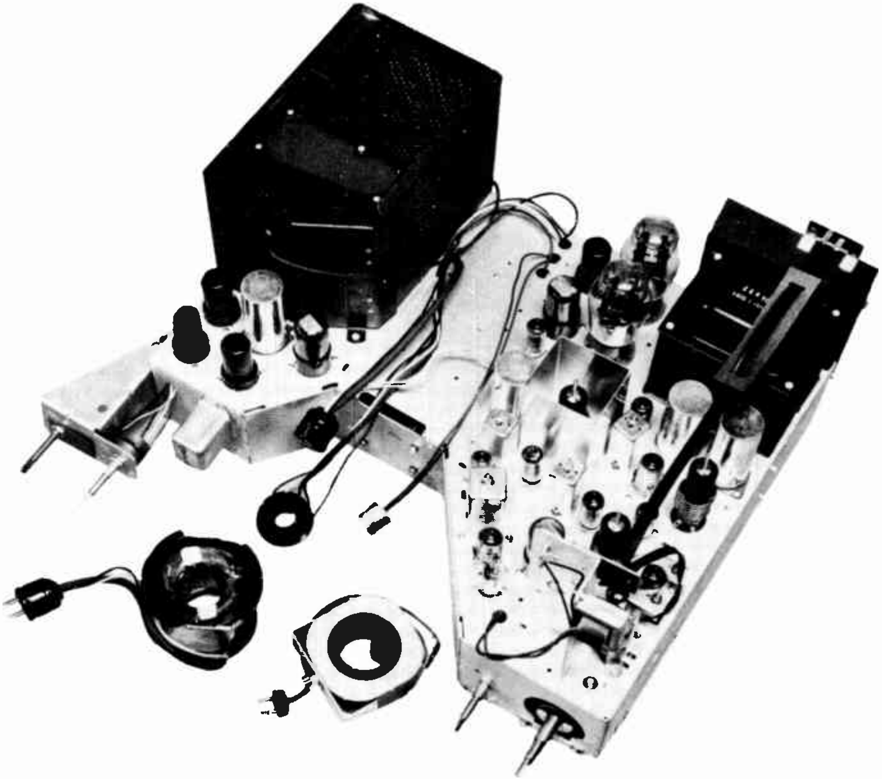

The top view of a well known dual channel receiver.

Courtesy "Mars" Television Inc.

Capacitor C_8 serves as an r-f bypass across the load, and the values of resistor R_9 (33K) and capacitor C_{11} (.002 μfd) are such that the time constant is 66 microseconds. This may be recognized as a de-emphasis network to bring the frequency response back to normal. It is somewhat lower than the 75 microseconds prescribed but it is close enough for practical purposes.

The 4 μfd capacitor C_7 prevents any voltage changes at an audio or higher rate across resistors R_6 and R_7 in series. This prevents any noise pulses from getting through to the audio amplifier and since the action is that of a limiter, the ratio detector does not have to be preceded by a limiter stage. Both R_6 and R_7 are 10,000 ohms. The resulting time constant of .08 second corresponds to a frequency of 12.5 cps. This means that the charge on C_7 cannot change appreciably at an audio rate but it can change when the receiver is switched from one channel to another of a different signal strength.

The audio input to tube V_4 can be controlled by the manual 1 megohm volume control R_8. The tube is a type 6SQ7 twin diode, high-mu triode, but here the two diode plates are tied to the cathode and the tube is used as a triode. Bias voltage is developed by capacitor C_{10} and the 4.7 megohm resistor R_{10}.

Except for the method of supplying d-c voltage to the type 6AS5 tube, this is a conventional audio output stage. The plate supply voltage is sufficiently high that tube V_5 is connected in a series-parallel arrangement with a number of other tubes in the receiver, as indicated at the right center of the diagram. The circuits are so designed that all tubes are supplied with the correct screen and plate voltages.

One point of particular interest is the method of biasing the grid of the output tube. With tube V_5 in series with other tubes in the plate voltage supply circuit, its cathode is at a relatively high positive potential with respect to ground. This is indicated by the polarity markings on capacitor C_{15} and the note that a cathode tap connects to plate circuits of other tubes in the receiver.

To obtain the proper negative bias under these conditions, the grid must be made positive with respect to ground. For example, assume that in the circuit of Figure 14, B+ is 250 volts positive with respect to ground and the cathode of V_5 is 100 volts positive. For proper operation, the grid should be 8.5 volts negative with respect to the cathode, therefore it must be $100 - 8.5 = 91.5$ volts positive with respect to ground and B−.

This potential is obtained by the voltage divider made up of resistors R_{13} and R_{14} connected across the 250 volt B supply. As the grid current is negligible, the voltage drops across the resistors will be proportional to their resistance. The grid return connects to the junction between the resistors. Therefore the drop across R_{14} should be 91.5 volts and that across R_{13}, $250 - 91.5 = 158.5$ volts. Employing RTMA values, 470,000 ohms for R_{13} and 270,000 ohms for R_{14} provide the required voltages.

In order to prevent interaction between the tubes in this series parallel arrangement, a filter circuit is used. The filter consists of capacitors C_{15} and C_{17} and resistor

R_{15}. The practice of connecting tubes in series and series-parallel to obtain the correct d-c operating voltages is common in television receivers.

The audio output from tube V_5 is impressed on the 5″ permanent magnet speaker by use of the output transformer T_2.

ADVANTAGES AND DISADVANTAGES OF THE INTERCARRIER SYSTEM

Receivers using intercarrier sound can be made appreciably cheaper than those employing the dual channel system. This is due to the fact that no multi-stage sound i-f channel is required. There is another advantage in the use of this system from the standpoint of stability. Since the sound and video combined are amplified in several stages following the mixer, and since the sound i-f is determined by the fixed difference between the two carriers, drift in the local r-f oscillator will not be as detrimental as it is in the dual channel system. This provides improved stability.

There are other aspects, however, which affect the success of the system. Experience has shown that the magnitude of the video must be at least ten times that of the sound to prevent undue amplitude modulation of the sound. Since the video is amplitude modulated, it drops to a low value during modulation at the transmitter. If it drops too low, the sound reproduction at the receiver suffers. This means that when maximum white is being transmitted, the depth of modulation of the video carrier should not be allowed to drop below about 10%. Also, undesirable phase modulation should be kept at a low value since the receiver sound channel cannot discriminate against it as it does against amplitude modulation.

Another criticism of the intercarrier type of receiver is that it may develop a characteristic audio buzz. If the controls are not properly adjusted or the alignment is faulty, the video may cause so much amplitude modulation of the 4.5 mc sound i-f carrier that it cannot be removed by the limiter or the ratio detector. However, when the receiver is properly aligned and adjusted, the audio buzz usually is reduced to a satisfactory level.

* * *

STUDENT NOTES

STUDENT NOTES

STUDENT NOTES

STUDENT NOTES

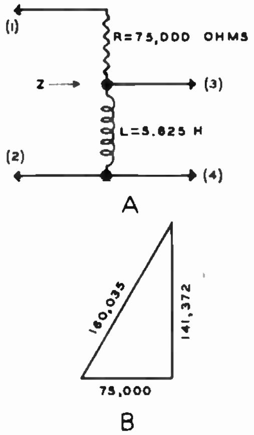

FIGURE 1

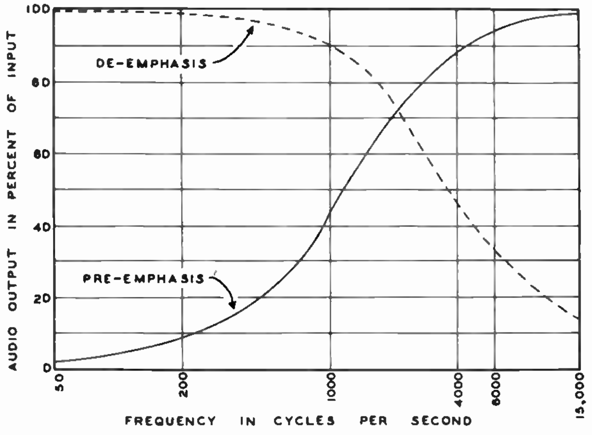

FIGURE 2

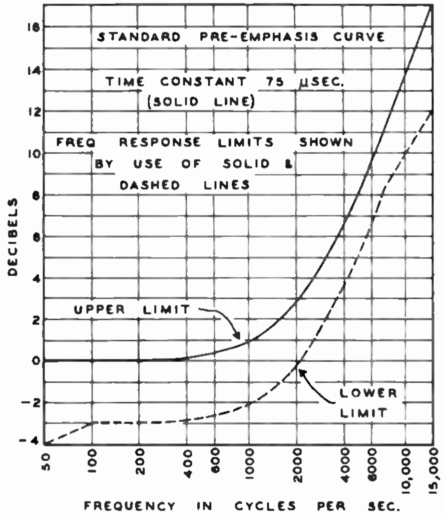

FIGURE 3

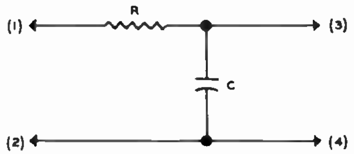

FIGURE 4

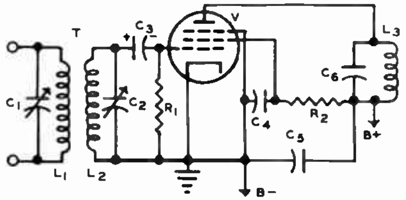

FIGURE 5

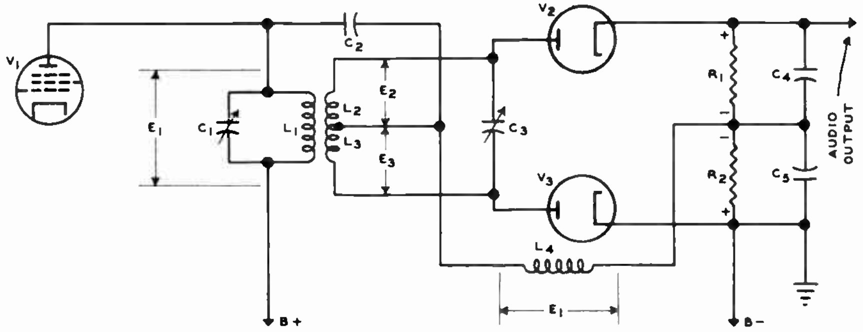

FIGURE 6

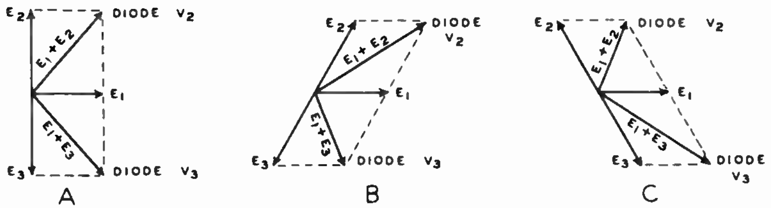

FIGURE 7

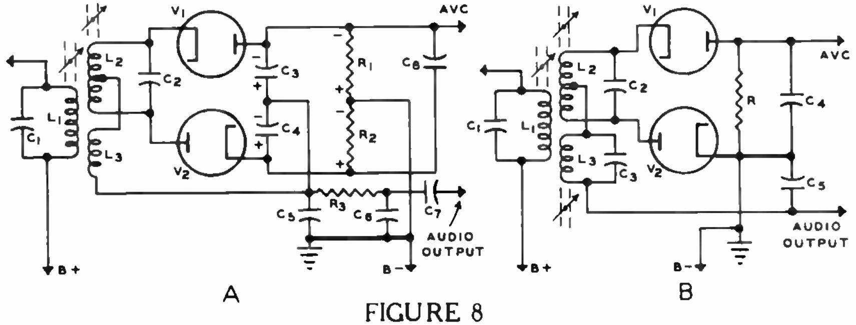

FIGURE 8

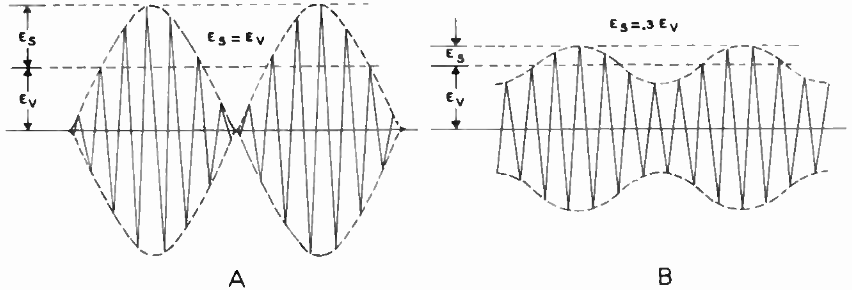

FIGURE 9

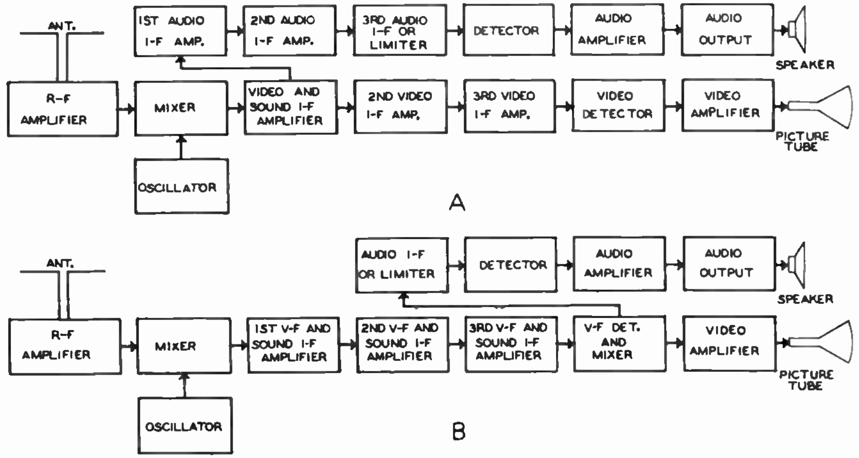

FIGURE 10

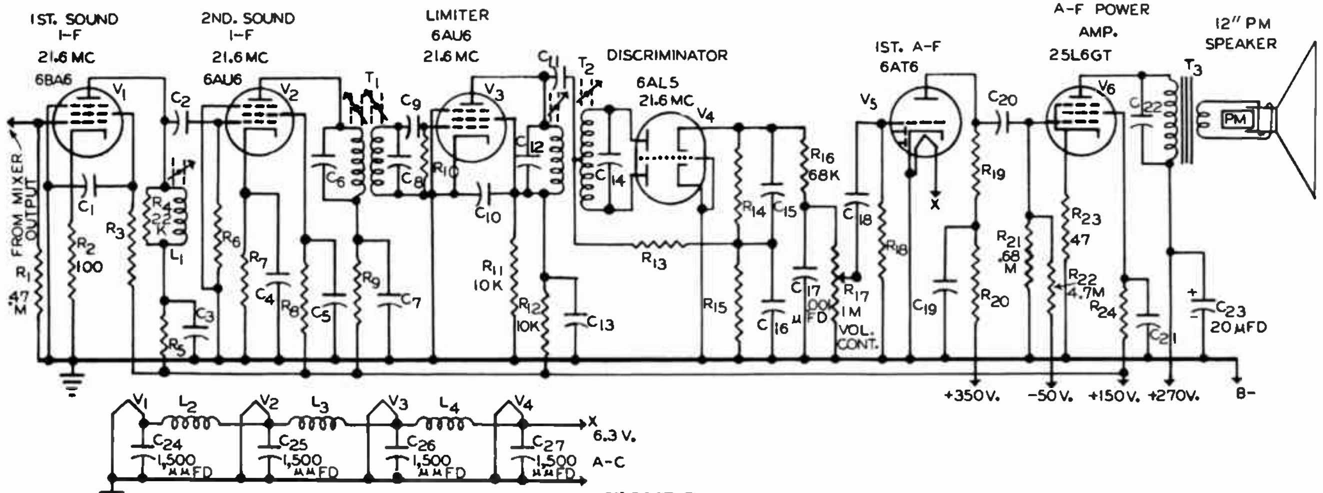

FIGURE 11

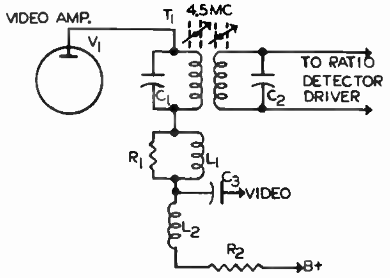

FIGURE 12

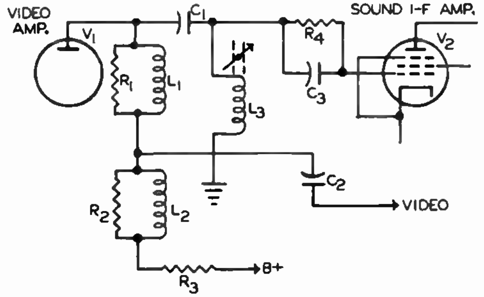

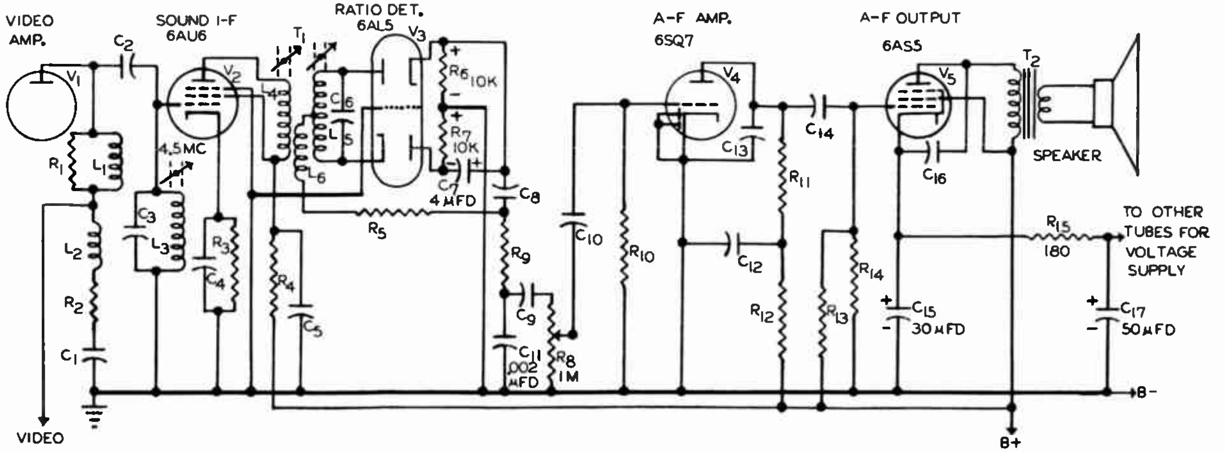

TPC-19 FIGURE 13

FIGURE 14

DeVRY Technical Institute

Formerly DeFOREST'S TRAINING, INC.

4141 WEST BELMONT AVENUE CHICAGO 41, ILLINOIS

QUESTIONS

TV Receiver Sound Channel—Lesson TPC-19A **Page 31**

4

How many advance Lessons have you now on hand? ....

Print or use Rubber Stamp.

Name .... Student No. ....

Street .... Zone .... Grade ....

City .... State .... Instructor ....

Write your answers on the "Ans." line below each question. If more space is needed use reverse side of this page.

1. **What is the advantage of employing a pre-emphasis arrangement at the transmitter of an FM sound carrier?**

   Ans. ....

2. **In a sound de-emphasis filter network, calculate the capacitance that must be used with a 50,000 ohm resistor to provide a time constant of 75 microseconds.**

   Ans. ....

3. **What is the input voltage requirement to a limiter stage for good limiting action?**

   Ans. ....

4. **In the Foster-Seeley discriminator arrangement of Figure 6, does an audio voltage exist across the output at the center frequency?**

   Ans. ....

5. **What component in the circuit of Figure 8A prevents the ratio detector from being responsive to amplitude variations due to noise?**

   Ans. ....

6. **What two characteristics are provided by the resulting voltage of the heterodyne action of Figure 9B?**

   Ans. ....

7. **For what purpose are r-f chokes used in heater circuits like that of Figure 11?**

   Ans. ....

8. **What is the advantage of designing wide (200 kc) response sound i-f stages for use in television receivers?**

   Ans. ....

9. **What are two advantages in the use of intercarrier sound systems?**

   Ans. ....

10. **How can the characteristic audio buzz in an intercarrier type of receiver be kept at a satisfactory level?**

    Ans. ....

FROM OUR *Director's* NOTEBOOK

POISE

It has been correctly said that the essence of true Poise is to be able, no matter what happens, to conduct one's self as though nothing has happened.

To have Poise is to keep "a tight rein" on our inner feelings.

Poise is that Outward Calm which characterizes the successful hostess—a calm that imparts to her guests a feeling of ease and "at-home-ness". The operators became Foremen or Superintendents when they learn to meet the Minor Emergencies connected with their jobs with Complete Assurance—when they became competent to shoulder more than their own share of Responsibilities without appearing to be doing so.

There is a sharp distinction between Poise and its false counterpart Nonchalance. The one is the outward manifestation of inward Confidence and Competence. The other is but an expression of Indifference to whatever impression might be created by word or deed.

The supply of workers (in all fields) who have trained themselves to keep their Emotions under Control is scarcely sufficient to meet the demands of American Business.

Yours for success,

W. C. DeVry

DIRECTOR

PRINTED IN U.S.A.

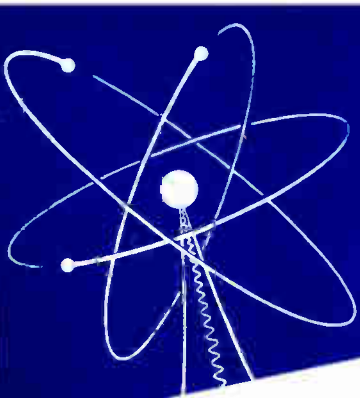

PROJECTION AND COLOR TELEVISION

Lesson TPC-20B

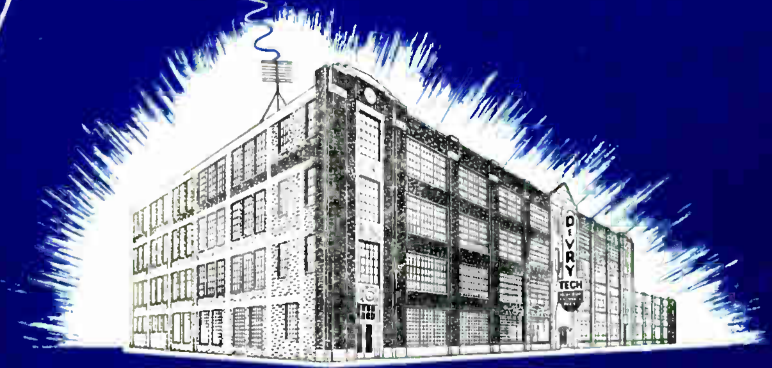

DeVRY Technical Institute
4141 W. Belmont Ave., Chicago 41, Illinois
Formerly DeFOREST'S TRAINING, INC.

-20

TPC-20B

PROJECTION AND COLOR TELEVISION

ELECTRONICS TELEVISION
DTI
DeVRY Technical Institute

4141 Belmont Ave.
Chicago 41, Illinois

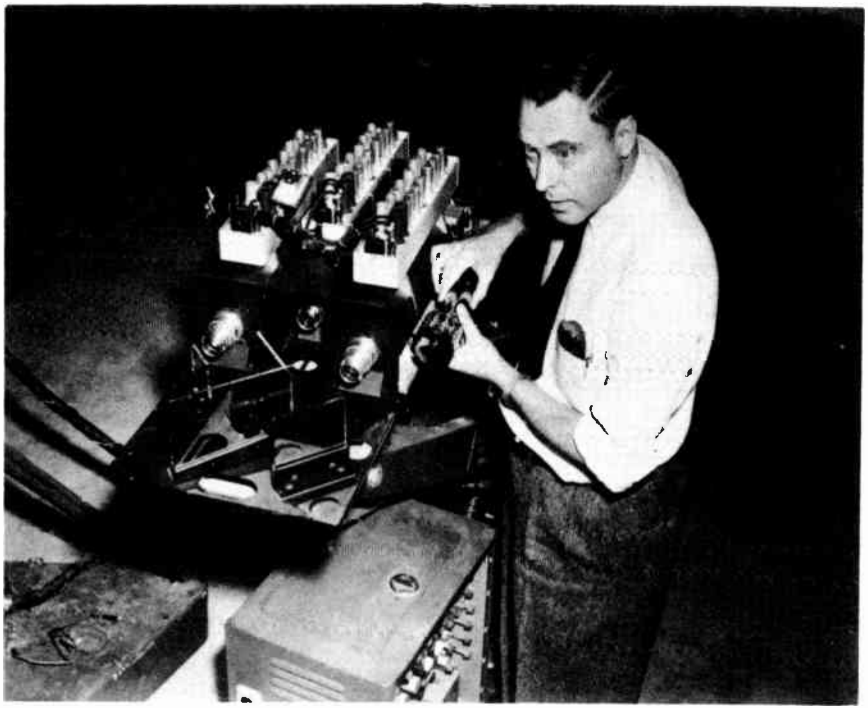

An RCA color television camera with cover removed. Two dichroic mirrors mounted in front of the camera tubes allows green rays to pass through to the center tube. Red rays are reflected via a plane mirror to the tube at right and blue rays are reflected by another mirror to the tube at the left.

Courtesy Radio Corporation of America

Television

PROJECTION AND COLOR TELEVISION

Contents

Attempt the end, and never doubt;
Nothing's so hard but search will find it out.
—Herrick

PROJECTION AND COLOR TELEVISION

PICTURE SIZE REQUIREMENTS

Motivated by the natural desire of the public for larger pictures than were provided by the early television receivers, the design trend has been toward increased screen size. When the television screen is viewed for long periods of time, less eye fatigue is produced if the picture does not occupy too small a field of view. On the other hand, tiring of eye muscles will result if the field of view is too large, because then the eye must move constantly to scan the entire picture.

Thus, from the standpoint of eyestrain, the screen size should fall within some fairly definite range. Other factors which determine the desirable screen size are the ability of the eye to resolve the small detail in the picture, and the line structure of the raster. When the picture is too small, the eye is unable to see the smallest picture elements and the individual scanning lines are visible if the picture is too large.

Generally, the viewing distance is relatively short for the ordinary size living room and a small number of viewers, while in a recreation room, business establishment or auditorium, the larger number of viewers will require a greater viewing distance. For best results the desirable picture height should fall somewhere between the limits of 1/5 and 1/10 the distance from the viewers to the screen.

For example, with a viewing distance of about 7 feet or 84 inches, the picture should be from about $84/10 = 8.4''$ to $84/5 = 16.8''$ in height. On the same basis, a viewing distance of 12 feet requires a picture height of from about 14.4 to 29″, while, for a viewing distance of 50 feet, a picture height from about 5 to 10 feet is needed.

In the projection type television receivers, a lens-mirror combination projects the light from the picture tube face into a viewing screen in a manner somewhat similar to that employed in motion picture theaters. The most common type of projection is called the REFLECTIVE SYSTEM. Before the details of its construction and operation are explained, a few basic facts concerning mirrors are of benefit.

MIRRORS

Any mirror has the primary purpose of reflecting light in some desired manner. The basic laws of reflection are illustrated in Figure 1 where MN represents the surface of a mirror and, from source S, light ray I strikes MN at point O. Called the "normal", dashed line D is drawn perpendicular to MN at point O, while ray R is the path taken by the reflected light which is traveling toward P, as indicated. The first law states that THE "ANGLE OF INCIDENCE" ∠A IN THE FIGURE,

IS ALWAYS EQUAL TO THE "ANGLE OF REFLECTION", ∠ B. The second law states that THE INCIDENT AND REFLECTED RAYS I AND R, AND THE NORMAL D, ALL LIE IN THE SAME PLANE, CALLED THE "PLANE OF INCIDENCE".

Plane Mirror

On the basis of these laws, reflection by a PLANE MIRROR (flat) is illustrated in Figure 2. From object AB, light rays are reflected by mirror MN to an eye at point P. From A, a ray strikes the mirror at O and is reflected to the eye. In similar manner, rays from every point along AB are reflected by MN so that a "reflection", or image, of the entire object is seen.

Although the light rays actually travel by the paths indicated by the solid lines in the figure, so far as the eye at P is concerned ray OP seems to be coming from point A′, and ray KP from B′ in back of the mirror. Also, the distance O to K is less than the length of AB. With respect to the surface of the mirror, this foreshortening of the reflection causes the image A′B′ to appear to have the angle shown rather than that of AB. The fact that the complete image of AB is seen by the eye at P, even though point B is lower than the lowest point N of the mirror shows why a person needs a mirror only about half his own height in order to see his whole figure.

A plane mirror forms an image which is turned left for right with respect to the object in front of it, as shown in Figure 3A. Optically speaking, this action is known as PERVERSION. Normally a plane mirror does not form an inverted image, but inversion may be accomplished by positioning the object under or above the mirror, and at right angles to its surface, in which case the image is inverted but not perverted. This type of inversion is shown in Figure 3B.

If a plane mirror is positioned so the incident light rays impinge or strike upon it at an angle of 45°, according to the laws of reflection the reflected rays will leave at an angle of 45° and the image is "turned" exactly 90° with respect to the object. As illustrated in Figure 4 by light rays A′B′ projected on the semi-transparent screen, S, Ray AO is at 45° to the normal at O and BK is at 45° to the normal at K. Therefore, reflected rays OA′ and KB′ are at 45° to the respective normals, and the image A′B′ is at 90° with respect to AB, as indicated by the lines extended to point P.

This action should be kept in mind, as it is employed in the television applications of the reflective optical system.

Spherical Mirror

In Figure 5, MN represents a concave SPHERICAL MIRROR which may be thought of as a very small portion of a sphere, the center of which is at point C. Known as the axis of the mirror, line OL passes through the center of curvature, C, and point O which is midway between M and N. The distance OC is the RADIUS OF CURVATURE. Light rays from an infinitely distant source are considered to be parallel to axis OL, and, striking the mirror at various points such as J and K, are reflected according to the law of angles so that they intersect at a point, F, called the PRINCIPAL FOCUS. Known as the FOCAL LENGTH of the mirror, the distance from F to O is equal to one-half that from C to O.

The 5RP4 Cathode ray tube is an electrostatic deflected projection tube. Due to the high anode and deflecting voltages, the connections are made through the neck instead of the base.

Courtesy Allen B. DuMont Labs., Inc.

When, as shown in Figure 6, object AB is placed across the axis at the center of curvature, an inverted image A′B′ is formed at the same point. This inversion is due to the fact that the various angles of incidence and reflection are such that the ray from point A to J is reflected to point A′, as will the ray from A to K, and the rays from A to every other point on MN. In like manner, all rays emanating from point B are reflected to point B′. Thus, all rays from the various points of AB above the axis are reflected to corresponding points below the axis, and vice versa, so that the image is the same size as the object, but inverted. The image is perverted also.

To be useful in a projection television system, the image formed must be larger than the object, and this result may be obtained by the arrangement of Figure 7. Here, the object is located between the center of curvature C and the principal focus F, and all the rays from point A of the object are reflected at points J, K, etc. so that they meet at point A′ at the extreme right in the Figure. Likewise, rays from each point of AB are reflected so that they meet to form the corresponding points of the enlarged, inverted, and perverted image, A′B′. On the other hand, should the object be located further away from the mirror than point C, such as at A′B′, then the image is formed at AB and is smaller than the object.

It has been assumed that the spherical mirror is a very small portion of a complete sphere, in which case the images formed are undistorted. However, if the mirror is a considerable part of a whole sphere, all rays parallel to the axis do not pass through the principal focus as in Figure 5, but cut the axis between F and O as shown in Figure 8. With an increase of distance between the incident rays and the axis, the reflected rays cross the axis closer to the mirror, and their mutual intersections form two luminous curves known as CAUSTIC CURVES which meet in a sharp point or cusp at F. This effect is known as SPHERICAL ABERRATION and results in distortion of the image when rays from a given point on an object are reflected so that all of them do not meet at the same point.

To compensate for spherical aberration, a CORRECTION LENS is added to the system. This lens introduces spherical aberration equal but opposite to that introduced by the mirror so that one neutralizes the other.

REFLECTIVE OPTICAL SYSTEM

Basic System

The optical principles employed in television projection systems have been used in other fields for many years. Suggested first by Gregory about 1663, the arrangement of Figure 7 was employed several years later by Newton to construct the original reflecting telescope. In this application the object A′B′ is at a great distance and the image AB has a much smaller relative size, thus approaching the conditions of Figure 5.

About 1906, an American lens designer named Kellner, patented an optical system for search lights and automobile headlights. Including a spherical mirror and a correcting lens, this system is essentially the same as that employed in projection television receivers. Then at the Hamburg Germany Observatory in 1931, an instrument maker by the name of Schmidt developed this same system for taking astrophotographs. Schmidt's equipment was used extensively by astronomers and became quite well known. Thus, the television application of the reflective optical system frequently is called, "Schmidt Optics" or the "Schmidt Optical System."

Television Application

In the television reflective optical system, the picture tube face is the object, and, emanating from it, the light rays are reflected by the spherical mirror to form an enlarged image at a point beyond the center of curvature, in the manner illustrated in Figure 7. Besides the relatively high light transfer efficiency of this arrangement, a spherical mirror has only about one-eighth the spherical aberration as a single lens of comparable focal length and diameter.

One popular system for projection television receivers is shown in Figure 9. Here, the spherical mirror is mounted at the bottom of the cabinet with its axis vertical, the reflected rays being projected straight up through the correcting lens to a plane mirror mounted at an angle of 45°. The mirror bends the rays 90° so that the image is focused upon the translucent viewing screen mounted in the front of the cabinet.

The various distances are adjusted until the translucent screen is at the correct total optical distance, or "throw", from the spherical mirror so that the screen is at the exact point where the image is formed by the converging rays. For example, letting the picture AB on the picture tube face represent the object, the paths of two rays from point A are shown to be reflected from the spherical mirror so that they converge and strike the plane mirror at two points quite close together. Leaving the 45° plane mirror, the two rays continue to converge and finally meet at point A′ on the viewing screen. Two similar paths of light, point B on the picture tube face, meet at point B′ on the screen.

White light is a combination of all the colors of the rainbow, and passing through the correcting lens, the various colors will come to a focus at different points, tending to produce an image having colored fringes. Called CHROMATIC ABERRATION, this effect is especially noticeable when the rays enter the lens at a considerable angle, and is prevented in the system of Figure 9 by virtue of the fact that the center of the spherical mirror is non-reflective. Often this central area is omitted, and the mirror configuration is much like that of a saucer with the cup resting surface removed.

With an arrangement of this type, a flat object normally is reflected as a curved image. This action is due to what is called, CURVATURE OF FIELD and, since the viewing screen is flat, a curved object must be employed to obtain the flat image necessary for good focus over the entire screen. To provide an object having the correct amount of curvature, the projection television receiver picture tube has a face with a radius of curvature equal to a little less than one-half that of the spherical mirror. With this arrangement the portions of the two spheres facing

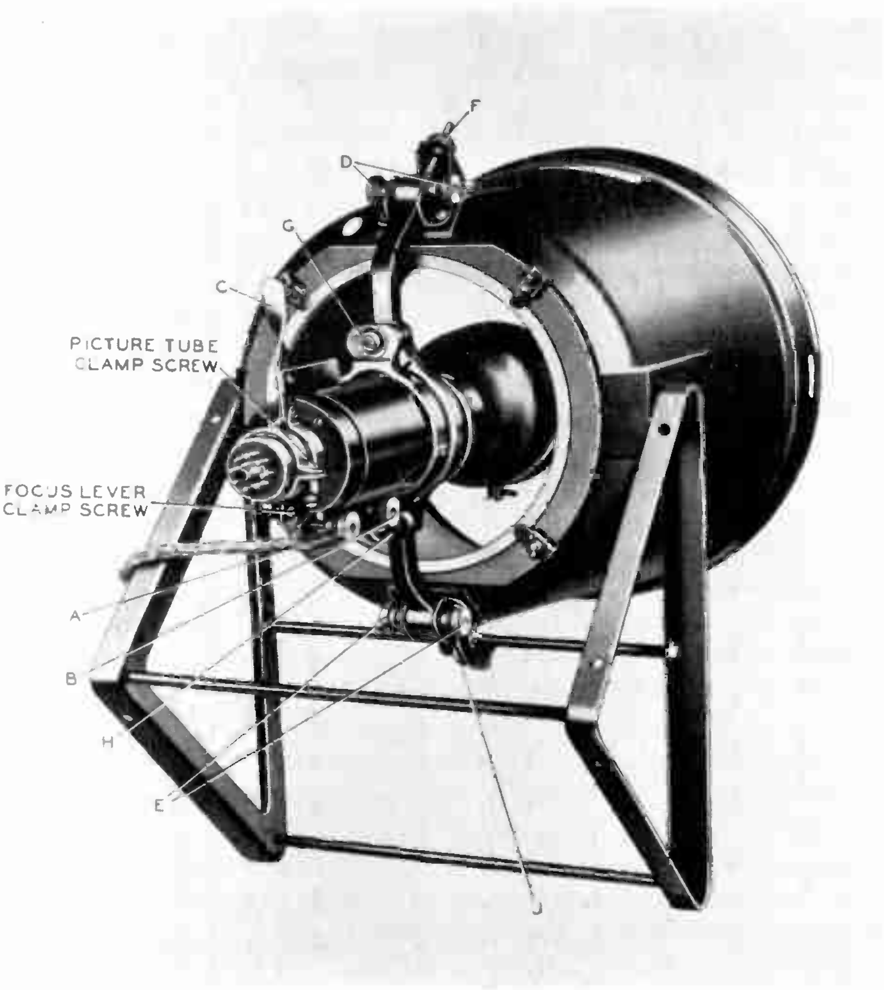

Television projection system for theaters. The housing holds the picture tube, deflection coils, spherical mirror and correcting lens.

Courtesy Philco Corp.

each other are approximately concentric.

Although used to prevent spherical aberration, the correcting or aspherical lens should not disturb the optical system in any other way. Therefore this lens is very weak and is located at the center of curvature of the mirror. Preparing and polishing a glass correcting lens of the special shape required is difficult, costly and time consuming. However, this problem has been overcome by processing the lens from heated plastic formed in precision molds while under high pressure. With this method, the production line manufacture of these lenses is so precise that no polishing, surfacing or finishing is necessary before insertion in the optical system. The optical properties of plastic are superior to those of glass and, in addition, it provides higher transmission as well as less scattering of light rays.

Ordinary mirrors have the reflective surface on the back of the glass and the small amount of light reflected by the front surface of such a mirror produces a "ghost" when the incidence and reflected rays are at an angle to the normal, as in Figure 9. To prevent this, the 45° plane mirror is designed to reflect from its front surface only, and therefore is known as a FRONT-SURFACED mirror.

In some receivers, the translucent viewing screen is composed of two sheets of Lucite-plastic having a layer of diffusing material between them. The front sheet has a large number of fine vertical ribs molded into its outer surface so as to increase the horizontal viewing angle above that obtained with a flat surface. The back sheet is molded into the shape of what is known as a FRESNEL LENS. This is a thin lens which is shaped so as to have the optical properties of a much thicker lens, and its purpose is to concentrate the light into a relatively narrow vertical angle. This viewing screen assembly gives a light-output of approximately five times that obtained with a ground glass screen.

Due to absorption by the various mirrors and lenses, only about one-fourth of the light emitted from the picture tube face reaches the viewing screen. To obtain a high degree of brightness, a 3 x 4 inch raster is produced on the aluminized screen of a 5-inch picture tube operating with an anode potential of about 27,000 volts. A representative viewing screen size is 15 x 20 inches, in which case the picture area is increased from 12 square inches on the tube face to 300 square inches on the screen, or by $300/12 = 25$ times. Thus, the light which does reach the screen is spread out over 25 times the original area, so that the light intensity on the picture tube face must be about $4 \times 25 = 100$ times that desired on the viewing screen.

Folded Schmidt System

As shown in the cross sectional drawing of Figure 10, a somewhat different arrangement of the optical components is employed in a compact projection package developed for use in home receivers. This equipment consists of a cathode-ray tube mounted in a projection box.

This model differs mainly from other systems in that the projection box, or optical unit, is arranged so that the light rays, reflected from the spherical mirror, are bent or folded before passing through the correcting lens. This folding is accomplished by means of the 45° plane mirror with an elliptical center hole to accommodate the picture tube. Because of this arrangement, the rays leave the optical unit at an angle of 90° to the axis of the picture tube. A second difference is that the optical unit has very small dimensions, a feature which provides large screen television with comparatively small cabinets.

The projection cathode-ray tube is a type 3NP4, on the 2.5 inch diameter face of which a raster 1.4 x 1.86 inches is formed. This small raster requires a total deflection angle of only 40 degrees and a deflection current amplitude about the same as that used for a 10-inch direct-view cathode-ray tube. The deflection coils are mounted inside the optical unit, while the focus coil is mounted outside.

The face plate of the tube is of special glass which, unlike ordinary glass, does not become discolored by the X-rays produced by the high-intensity electron bombardment. The light output is increased by means of an aluminum coating on the inner surface of the fine grain phosphor screen.

The anode terminal is surrounded by a glass cup which prevents corona discharges into the air. The grounded outside aquadag coating serves as a static shield, while capacitance between this coating and the anode inside coating serves as the output filter capacitance for the high voltage power supply.

One method by which the optical unit may be employed to accommodate a table model type cabinet is shown in Figure 11. Here, two external plane mirrors are required to complete the optical system. The light rays from the picture tube are reflected by spherical mirror M_1, again by plane mirror M_2 and projected through the aspherical corrector lens L to fall on the plane mirror M_3. From here they are reflected to plane mirror M_4 which directs them to screen S where they form an image. With a larger cabinet, less "folding" of the image is necessary.

In the case of the reflective projection systems such as those described above, the size of the projected image is fixed by the throw (total distance between the spherical mirror and viewing screen) for which a particular unit is designed. In turn, the throw is determined by mirror size, the size of the correcting lens, etc. As the dimensions of these elements are fixed, the throw, and therefore the size of the image, cannot be changed readily for any one design. The Protelgram unit provides a projected picture, the dimensions of which are 12 x 16 inches and which requires a throw of 31 inches obtained with a spherical mirror 6 inches in diameter having a radius of curvature of 200 millimeters and an aspherical corrector lens 4.5 inches in diameter.

The deflection and focus coils and mounting bracket used with the projection system shown in the preceding illustration.

Courtesy Philco Corp.

THEATER TELEVISION

Programs already shown in large auditoriums in metropolitan areas have established television entertainment in the theater. Although the most popular telecasts have been feature sport attractions, important news events can be televised in much the same way, the news camera is able to gather its "spots". Some theaters may elect to show television programs exclusively and such a plan would undoubtedly be well adapted to those of the newsreel type. Originating on the stage of a particular auditorium, the multi-reproduction of special television shows is possible in local or linked theaters by network arrangements and, in all probability, is the most immediate means of presenting a feature to the greatest number of theater-paying audiences.

A typical theater television projection system employs the reflective system with the picture tube, spherical mirror and correcting lens contained in a housing constructed on the general plan of Figure 12. The projection tube has a diameter of 15 inches and operates with an anode voltage of 80,000 volts. The spherical mirror has a diameter of 42 inches, and the aspherical correcting lens a diameter of 36 inches. The throw of this unit is 40 feet which permits its installation in the balconies of the smaller theaters, or mounted on the ceilings in larger theaters.

Picture signals can be fed to this projector from any regular television source such as network coaxial cables, microwave relay source, studio or camera pickup sources, etc. The high voltage power supply incorporated into the projector housing is of the high frequency oscillator type and thus the high-potential danger to operating personnel is limited. Various operating controls mounted on the unit permit the operator to adjust the brightness, focus, and framing of the picture.

WHY COLOR TELEVISION?

Color appeal has long been recognized by advertisers and the movie industry as a very important factor in attracting attention and holding the interest of the observer. Pictures in black and white while they seem realistic, are lacking in the life-like appearance presented by those in natural colors. It was this color appeal and the more realistic presentation that led the movie industry to spend huge sums of money developing technicolor films. Recognizing the merits of color, the television industry conducted experiments in color more than twenty years ago. Then, and for a number of years following, developments were slow due to the crude methods of transmission and reception available at that time.

Today, with the tremendous advance in the technical and practical phases of television, the interest in reproducing televised scenes in natural color has grown tremendously. Extensive research work is being done by many organizations to perfect a system that is effective and not too expensive. Several systems have been proposed, each with its own advantages and disadvantages.

Among television engineers and manufacturers there are wide differences of opinion regarding the merits of the various color systems which have been proposed. It is to be expected that certain features of various color television systems will be incorporated in the selected system. As the reproduction of television images depends upon light, optics, and color, it is of benefit to start with a brief study of a few important principles.

LIGHT COLOR

In the black-and-white television system, variations of light intensity encountered in the process of scanning the object at the transmitter are converted to corresponding changes in electric energy. After transmission, this electric energy is picked up by the antenna, amplified by the receiver, and reconverted to light energy in the proper manner and sequence to give a black-and-white reproduction.

Like an ordinary photograph of a bed of varicolored flowers, it provides a comparatively drab image of the object in various degrees of shading, but little indication of color. Certain shades of brown and red will look identical while certain shades of blue look almost white.

It is chiefly the intensity of the light reflected from various points on the object and not its color, that determines its appearance in the reproduction. Of course there is a relation between the color of the object and the intensity of the light it reflects, but this fact is of little use in interpreting color in a black-and-white picture.

In Figure 13, the visible range of light spectrum is shown with the various wavelengths identified by color. Light of one range of frequencies striking the human optic nerve produces the sensation of red, while another frequency range is ''seen'' as yellow, and still another as blue. In other words, the eye is sensitive to various frequencies in the electromagnetic spectrum and identifies the various frequencies in the terms of color.

The speed of light is approximately 186,271 miles per second in a vacuum. However, this speed will vary with different mediums through which the light passes as with the frequency of the light radiation.

When a beam of sun light strikes a glass prism as illustrated in Figure 14, the various visible frequencies are refracted at slightly different angles thereby causing the light that leaves the prism to be broken up into various colors. Six different colors ranging from red to violet are shown, but actually each color blends slowly into another giving a multitude of shades across the spectrum. This action proves that white light is actually made up of many colors, dozens of different shades of which can be detected by the human eye.

BASIC COLOR TELEVISION REQUIREMENTS

Color Filters

With the exception of sources of light, we see all objects by reflected light and colors are due to a filtering action which reflects some light frequencies and absorbs others. A portion of a colored picture looks red because the red in the incident light is reflected while the frequencies of the other colors are absorbed. Each ordinary object or area has a distinct color because its surface possesses the property of reflecting some light frequencies and absorbing others. Those that are reflected and strike the eye, give the sensation which lets us "see" that particular color.

With a single source of white light, the various colors can be seen through filters made usually of colored glass. Thus, when placed between your eye and a source of light, a piece of red glass will permit the red rays to pass but screen out the others. As a result, the source of light looks red. In the same way, filters of other colors will screen out all except their own color.

Although the visible spectrum contains innumerable shades, it is possible to produce the sensation of any color by a proper proportion of three primary colors: red, blue, and green. Therefore color television images are composed usually of superimposed red, blue, and green fields.

To illustrate the action of color filters, in the sketch of Figure 15, the object is a disc divided into areas of red, blue, and green, while filters of corresponding colors are placed between it and the lenses. Viewed through the lens and red filter, only the red area of the disc is seen as indicated by the top center view of Figure 15. In the same way, when viewed through the lens and blue filter, only the blue area is seen, and viewed through the lens and green filter, only the green area is seen. As indicated by the center views, the filters and lenses provide three images of the disc, each image corresponding to a primary color of the object.

Suppose now that the red, blue, and green images were transmitted separately and when received, retained their distinctive areas but produced white light. Then, as indicated at the right of Figure 15, a colored image of the original object can be obtained by combining the three images through lenses and filters of the proper color. Keep this general arrangement in mind as it is a basic principle of color television.

Persistence of Vision

When watching a slowly turning wheel the individual spokes can be seen. If the speed of rotation increases, the spokes become less distinct until finally they appear as a solid disc. If the speed is not too high, we can close our eyes to let the sensation die away completely and upon opening them we will catch fleeting glimpse of the spokes.

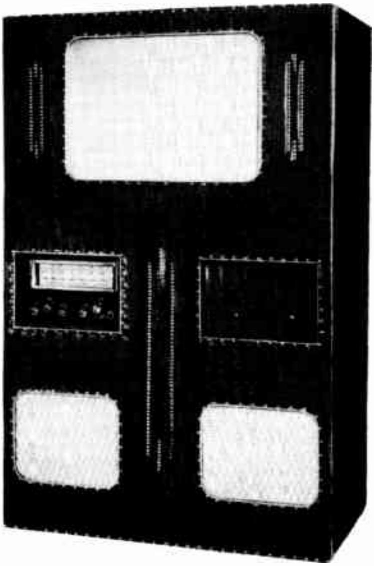

This industrial television receiver is a large screen projection system which provides entertainment to comparatively large audiences.
Courtesy U. S. Television Mfg. Co.

The fact that the human eye possesses the ability to retain an impression for a short time after the stimulus is removed makes it possible to see the television reproduction as a picture rather than a rapidly moving point of light on the screen. This is true for both black-and-white and color television but, in the latter, persistence of vision simplifies the problem of transmitting and receiving the many shades of color in the televised object. The actual period of time that the image persists after the stimulus is removed is not fixed, but depends upon several factors, one of which is brightness. In color television receiver design calculations, the persistence of vision time is taken as between 1/50 and 1/30 of a second.

Practically all the various shades of color can be duplicated by the proper mixture of the three primary colors red, blue, and green. This is very fortunate since if it were not true it would be necessary to make provisions at the transmitter to give each of the many common colors consideration. Persistence of vision plays an important role in the color television system by mixing the primary colors to produce a given shade. This makes it possible to reproduce the object in color by using only three color filters at the transmitter and receiver. It can be done with the colors of red and blue-green only, but better results are obtained with the three primary colors.

To illustrate the effect of persistence of vision in the color mixing process, assume a disc, one-half of which is red and the other half blue. With only one half of the disc visible, when it spins slowly the red is seen first and then the blue. If it spins faster, the red sensation will persist for a very short time after the blue comes into view and the blue sensation will persist after the red comes into view. One sensation is superimposed upon the other and the result is a combination of the two. In this case the resultant impression is that of purple. By varying the relative proportions of the two colors many shades can be produced.

Basic Color Methods

The present conventional system of black-and-white or MONOCHROME television is an optical illusion which depends on the persistence of vision of the human eye. At any instant, the screen of the common direct view type of picture tube is illuminated only by a single extremely small spot of light. However, the scanning movement of this spot is fast enough to cause an apparent illumination of the entire screen and by instantaneous variations in its brilliance, an image is produced. However, with the entire screen composed of the same material, the image is of but one color.

Two basic methods of producing colored television images can be explained by reference to Figure 15. First, if the three central colored images appear rapidly, one after the other on the screen of an ordinary picture tube, and each is viewed through the corresponding color filter, to the eye the result is a single colored image. Because the colors are shown in order or sequence, this method is known as SEQUENTIAL.

Second, if the three central colored images are projected through corresponding color filters and all focused to a common point, again the result is a colored image. Because all the colors are shown at the same time, this method is known as a SIMULTANEOUS system.

FIELD SEQUENTIAL TRANSMISSION

In its simplest form the Columbia Broadcasting System of color television can be considered as a black-and-white system to which rotating color discs have been added. As indicated in Figure 16A, a rotating color disc containing green, blue, and red filters is mounted in front of the camera tube. During the time the green portion of the disc is between the camera tube and the subject, only the portions of the subject that are green cause response in the tube and the transmitter circuits. The corresponding video signal is picked up by the receiving antenna and the partial image is formed on the picture tube.

As shown in Figure 16B, a rotating color disc is mounted in front of the picture tube screen. Moving in exact synchronism with the color disc at the transmitter, the green filter will cause the observer to see a green image.

When the blue portion of the transmitter disc moves into position a fraction of a second later, the blue portions of the subject are transmitted and appear on the receiver picture tube. Here, the blue filter has moved up in front of the picture tube and the observer sees the blue portions of the image. However, due to persistence of vision, he still sees the previous green portion of the image also. Then with the transmission of the red portions, the image is complete. Visual response to the two previous colors is still effective, and the eye combines the green, blue, and red images with the result that the subject appears in color.

How colors other than the three which make up the disc are reproduced can be understood by a specific case. For example, assume the subject's hat is purple. Since purple is made up of both red and blue, light from the hat passes through both the red and blue filters of the transmitter disc, and produces output signals from the camera tube. On the picture tube screen, the received signals produce an image of the hat during the time that both the red and blue filters of the receiver disc are in front of the tube. The persistence of vision causes the red and blue images to blend in the observer's eye, thus giving the sensation of purple.

A similar action occurs for all other colors. Each is made up of varying amounts of the three primary colors.

It is important that the mosaic of the camera be completely discharged at the completion of each color field. If it is not, colors are combined to give a very undesirable and unnatural appearance at the receiver. Too much afterglow on the part of the picture tube will cause a similar effect. Since the mosaic must be completely discharged at the completion of each field, there is a tendency for flicker. Therefore the colored images should be transmitted at a relatively high field rate.

This system has been in the process of development for a number of years and has gone through a great many modifications. The equipment demonstrating the system in 1940 used 343 lines per frame and 120 fields per second. Operation was on one of the standard six megacycle channels. The resultant lack of definition and the poor reproduction of some shades led to some postwar developments with encouraging results. In 1946, advantage was taken of a greater bandwidth to improve the quality of the picture. Accordingly, the six megacycle bandwidth was discarded and 16 mc substituted. Also, there was a change to 525 lines and 144 fields, resulting in greater detail and less flicker.

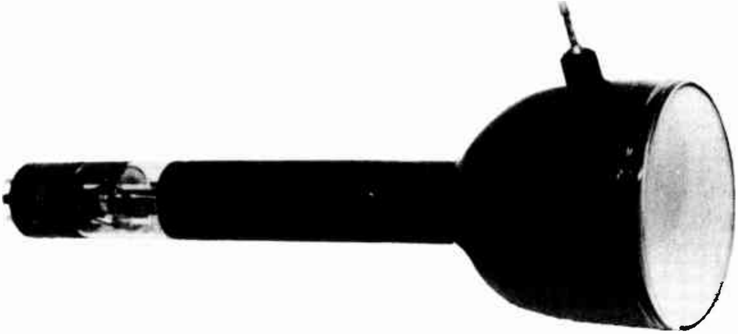

A cathode ray tube designed for television projection systems. Note that the tube anode connection is extended and well insulated due to the high voltages which are applied.

Courtesy National Union Radio Corp.

Later the bandwidth was reduced to twelve megacycles and the number of lines to 441. Finally, the bandwidth was reduced to 4.5 mc, and the number of lines changed to 405 with 144 fields per second. The number of picture elements is appreciably less than in the standard black-and-white pictures, but the addition of color compensates in part for the lack of detail. The reduction of the bandwidth was a very important advancement since it makes possible the use of the standard black-and-white channels.

Figure 17 shows the color switching sequence employed in the CBS system. Here, as in the black-and-white system, the term field pertains to the scanning of one set of odd or even lines, during which time a single primary color filter is in front of the camera lens. That is, the rotation speed of the color disc is such that each successive filter covers the lens for 1/144th of a second, during which interval the camera tube beam completes 202½ horizontal sweeps, or one FIELD. During the next field period, another filter is in front of the camera, and the other set of lines (even or odd) is scanned.

Thus, in an interval of 2 x 1/144, or 1/72 of a second, two complete fields are scanned, one even and one odd, for a total of 405 horizontal lines or sweeps of the beam. The scanning of any pair of successive fields is called a FRAME, and two colors are scanned during each frame period. These definitions of field and frame apply, regardless of the color of the filter in front of the camera at any instant.

Each group of 3 successive fields, including one scanning in each color, occupies a time interval of 3 x 1/144, or 1/48th of a second, and is called a COLOR FRAME. As in the case of the frame, a color frame may begin with either an odd or even-line field, and with any one of the three colors. In a like manner, any two successive color frames constitute a COLOR PICTURE. As indicated, each color picture occupies 1/24th of a second, and includes the entire cycle of operation during which both the odd and even lines are scanned in all three colors. Thus, the system provides 24 color pictures per second, with the fields interlaced 2-to-1 to reduce flicker.

The following important values are listed to provide a direct comparison of the standard black-and-white with the CBS color television.

	Standard Black and White	CBS Color
Lines per frame	525	405
Fields (per sec.)	60	144
Frames (per sec.) 2 fields	30	72
Color frames 3 fields	. . .	48
Color Pictures 6 fields	. . .	24
Horizontal Deflection frequency	15,750 cps	29,160 cps
Vertical Deflection frequency	60 cps	144 cps

Color Disc Speed:

3 filters—as in Figure 16—	2880 RPM
6 filters	1440 RPM
12 filters	720 RPM

For a large direct view receiver screen, the rotating filter disc must have rather cumbersome proportions if the mechanical components of the CBS system is retained, because the disc must have at least twice the diameter of the picture tube. However, the field sequential system of color switching may be achieved by optical and electronic means in a manner similar to that of some "all-electronic" systems which have been developed.

Due to the fact that this is a simple system, especially when used in closed circuits, it is very popular for industrial color television. However, it isn't the only one. Other systems have been devised, one of which is the FCC adopted standard for broadcast television. So let's consider the important features in these other systems.

LINE SEQUENTIAL TRANSMISSION

Employing color switching at the standard black-and-white line scanning rate of 15,750 per second, a second type of sequential system has been developed by Color Television Incorporated (CTI). Illustrated in Figure 18, this system employs pickup and reproducing tubes of the same type as used in black-and-white television. For the pickup action, Figure 18, the trichromatic lens and filter system, L_1, projects three images of different color onto the mosaic of the iconoscope, I. Indicated as R, G, and B, the respective red, green, and blue images are grouped side by side as shown, but do not overlap.

Sweeping horizontally at the rate of 5,250 per second, the iconoscope scanning beam traces over all three images as though they were a single picture. However, with this arrangement, the beam travels across any one image in one-third the time required to move across all three. Therefore, for each complete horizontal sweep, the samples of color information are transmitted as a ⅓ line of red, a ⅓ line of green and a ⅓ line of blue, in sequence.

At the receiver, the picture tube beam is deflected horizontally at the rate of 5,250 cycles per second and therefore reproduces the three images as shown in Figure 18. On the screen of tube P, the R, G, and B images are all black-and-white, but correspond in relative intensities to the three corresponding color images on the camera tube mosaic. In front of the picture tube the lens and filter system, L_2, is similar to that at the transmitter, but reversed, so that it collects the light from the three images, supplies the appropriate color to each, superimposes them, and projects the completed color picture onto the viewing screen.

The CTI system employs 525 lines per picture as in the black-and-white system. However, as the horizontal sweep rate is only 5,250 per second, the arrangement produced 5,250 ÷ 525 = 10 color pictures per second, or one-third the number of frames provided by the black-and-white system.

DOT SEQUENTIAL TRANSMISSION

Employing a color switching rate of 10.74 million per second, the Radio Corporation of America developed a sequential type color television system in which the color samples have the form of tiny dots along each scanning line on the receiver viewing screen. This system uses 525 lines per picture, and a horizontal sweep frequency of 15,750 cycles per second, thus allowing the color receiver to reproduce either black-and-white or color transmissions without any change. However, as in the CBS and CTI systems, a conversion unit or other changes are required to enable present black-and-white type receivers to receive color programs.

Color separation is often accomplished by DICHROIC MIRRORS. A dichroic mirror reflects one color but allows all other colors to pass through. In the RCA system, the color camera contains a system of dichroic mirrors which reflect the respective red, green, and blue light rays from the subject into a different camera tube for each color. Thus the color camera output circuit consists of separate red, green, and blue channels, each of which provides a continuous video signal that contains intelligence on the distribution and intensity of the color it represents.

An electronic switching circuit selects samples of each color signal in turn, and applies them to the transmitter modulator circuit at the rate of 10.74 million samples per second. Thus, 10.74 ÷ 3, or 3.58 million samples of each color signal are transmitted each second. At the receiver, another color sampling device serves to separate the color samples so that separate red, green, and blue pictures are projected on the receiver viewing screen. These three color pictures are superimposed on the screen in such a way that the colors are blended by the eye to give the impression of a picture in natural colors.

Mixed Highs

Certain tests have shown that the human eye has less acuity for small details which differ in color only than it has for small details which differ in brightness. That is, when observing very small objects, the eye is practically color blind. Therefore, any normal eye is satisfied when observing a color television picture at a given distance even though the detail information is transmitted as black-and-white, as long as the larger picture areas are represented by information transmitted as color.

Because of this fact, in scanning an object, it is not necessary to change from one color to another as quickly as it is to change from one degree of brightness to another. Thus, a color television system which transmits a 4 mc video band for each of the three primary colors requires a total bandwidth of 12 mc and is wasteful because it transmits color detail which the eye is unable to use.

By means of what is called the MIXED HIGHS SYSTEM, the required bandwidth for color transmission may be reduced by transmitting the small details as black-and-white while transmitting the larger picture areas as color. Representing the small picture details and called MIXED HIGHS, the high frequency components from all three colors are combined, separated from the low frequency components, and transmitted in the same manner as the entire video band in a black-and-white system. At the input to the receiver picture tube, the mixed high band is added to the lower frequency color signals, and thus the reproduced image actually consists of a partly colored and partly black-and-white picture.

The application of the mixed highs principle to the RCA dot sequential system is illustrated by the block diagram of the transmitter in Figure 19. From the color camera, the respective 4 mc video signals, in channels G, R, and B are applied to Adder No. 1 and to the green, red, and blue low-pass filters. Each filter passes frequencies between 0 and 2 mc, as indicated, but rejects or attenuates frequencies above 2 mc. The three color signals are combined in Adder No. 1 to produce a resultant signal which is equivalent to that obtained from the camera output of a black-and-white system. The adder output is applied to a band-pass filter which passes frequencies between 2 and 4 mc only, thus providing the desired mixed high signals.

Each low-pass filter output is applied to a "keyer" tube which serves to alternately close and open the path to Adder No. 2. The three keyers are operated so that the green, red, and blue low frequencies are applied to the adder in a definite sequence, while the mixed highs are applied continually from the 2-4 mc band-pass filter. Thus, at any instant, the output of Adder No. 2 consists of a composite of the mixed highs, the lows from one color channel, and the synchronizing signal from the sync generator. As indicated, the adder output is passed through a 0-4 mc low-pass filter and then applied to the picture transmitter block in which it modulates the r-f wave.

Color Sampling Process

In the transmitter of Figure 19, the various keyers are controlled by the output of the sampling signal generator. Each keyer is biased to cutoff so that, with no control sig-

In this projection television receiver the picture is reflected onto the semi-transparent screen by a mirror mounted at an angle of 45°.

Courtesy U. S. Television Mfg. Corp.

nal applied, it is nonconductive and the 0-2 mc video signal input cannot pass to the following adder amplifier. The sampling signal generator produces a 3.58 mc sine wave voltage, the positive peaks of which are able to reduce the keyer biases sufficiently to allow them to conduct and thus pass their respective video signals.

So that all three keyers do not conduct at the same time, the 3.58 mc control voltages must be applied in different phases to the respective keyers. From the sampling signal generator, the 3.58 mc output is applied to three phase-shifting networks which are represented by a single block in the figure. One of these networks advances the phase of the generator voltage by 60° and applies it to the green keyer. A second network retards the generator voltage by 60° and applies it to the red keyer, while the third network produces a 180° phase shifted voltage which is applied to the blue keyer.

Thus, the three keyer control voltages have 120° phase relationships because the green control voltage leads the red by 60° +60° = 120°, and the blue control voltage leads the green by 180°—60° = 120°, but lags the red by 180°—60° = 120°. This phase relationship is shown at the lower right of Figure 19 by the vector diagram, where E_s represents the sampling generator output and E_g, E_r, and E_b the green, red, and blue keyer control voltages, respectively.

Each keyer conducts for a period of approximately 60° of its control voltage cycle, and is nonconductive during the remainder of the cycle. At 3.58 mc, the period of one cycle is about 0.279 microseconds and, as 60° is one-sixth of 360°, each color signal sample has a duration of approximately $0.279 \div 6 = 0.0465$ microseconds. Therefore, during each succeeding 0.279 microsecond period, the color sample input to Adder No. 2 is as follows:

Input	Duration
Green lows	0.0465 microsecond
No Signal	0.0465 microsecond
Blue lows	0.0465 microsecond
No Signal	0.0465 microsecond
Red Lows	0.0465 microsecond
No Signal	0.0465 microsecond
Total Time of Cycle =	0.2790 microsecond

RCA Color Receiver

In the RCA color receiver, the signal is received by conventional black-and-white type receiver circuits. A single specially designed picture tube, or a combination of three monochrome (one color) type picture tubes is employed, with the v-f amplifier output applied to the picture tube grid or grids. A sampling signal generator produces a 3.58 mc sine wave, voltage which is applied through phase shifting networks to the keyers so that they operate with 120° phase difference, as explained for the transmitter of Figure 19. The keyer outputs are applied to the picture tube cathode or cathodes so the tube(s) are responsive at the proper interval for each color signal sample.

Dot Interlace

As previously explained, the use of mixed highs permits the required video bandwidth to be reduced from the original 12 mc. However, to allow operation in the standard 6 mc television bands, and have room for the accompanying sound signal also, the v-f bandwidth may be further reduced to 4 mc, by transmitting 15 complete color pictures each second instead of 30. Of course, this method results in halving the maximum possible picture detail or definition also, but may be compensated by employing what is known as DOT INTERLACING.

The 2-to-1 line interlace process used to reduce flicker in the black-and-white television systems also is employed in color television for the same purpose. However, in the RCA dot sequential system, each scanning line on the receiver viewing screen consists of a series of approximately 600 green, red, and blue dots. These dots are represented by the small squares in numbered lines of Figure 20. Each of the four sketches of Figure 20 represents but a very small area of the screen, and although adjacent dots overlap, for simplicity in the drawings the overlap is not shown.

The highest video frequency component of use in producing picture detail is a sine wave which varies from a crest to a trough in the time between two successive dots of the same color on any given scanning line. However, when the sampling generator output voltage is shifted by 180° the next time the same line is scanned, the picture information for a particular color is presented midway between the points at which it was given on the preceding scanning of that line.

As an example, line number 1 is scanned during the 1st scanning field, Figure 20A, and again during the 3rd scanning field, Figure 20C.

With the sampling signal shifted by 180° during line 1 of the 3rd field, relative to its phase during this line of the 1st field, the first green dot in line 1 of the 3rd field is produced one-half cycle later (at the sampling frequency) than it was in line 1 of the 1st field. Thus, it falls midway between the first and second green dots produced on this line by the first field scanning.

In a like manner, the first red dot on line 1 of the 3rd field is half-way between the first and second red dots on line 1 of the 1st field, while the first blue dot on line 1 of the 1st field is midway between the first and second blue dots on line 1 of the 3rd field.

Thus, over the picture scanning interval, the distance between dots of the same color is halved. Therefore, the maximum video frequency useful in producing picture detail is doubled, so that twice the detail or resolution is obtained compared to that without dot interlacing. Also, since the dots actually overlap at the conclusion of each picture scanning interval, every point on the screen is covered by picture information in each color.

Dot interlacing is accomplished by shifting the phase of the transmitter and receiver sampling signal generators by 180° at the start of each scanning line. As indicated in Figure 19, the sampling signal generator is synchronized by the horizontal sync pulses. Because line interlace is employed also, four different sketches are needed in Figure 20 to show the entire cycle of events.

For the 1st scanning field, the first line has the sequence of colored dots as shown in Figure 20A. Line 2 is skipped, but line 3 is scanned with the sampling sequence shifted 180° so that corresponding color dots are produced at points removed horizontally a distance of one and one-half dots from those of line 1. Line 4 is skipped and line 5 is scanned with the dots placed the same as in line 1.

For the 2nd field, Figure 20B, the even numbered lines are scanned, with the dots in the second and sixth etc. offset as shown. During the 3rd scanning field, Figure 20C, the odd numbered lines are scanned again, but this time the dots in the first and third lines are offset to produce the dot interlace as described above. Finally, in the fourth scanning field, Figure 20D, the even-line dots are interlaced by offsetting those in the fourth line etc.

REPRODUCING SYSTEMS

Various organizations are doing development work on methods of reproducing the received color program on the viewing screen of the receiver. Color picture reproducing methods for the CBS, CTI, and RCA color televising systems have been explained above, and a number of other methods are described in the following paragraphs. Although certain of these devices were designed for use with one or two types of transmission systems only, most may be used with any of the sequential transmission systems described.

Chromatron

One tube, developed by Dr. O. E. Lawrence on the west coast, is frequently referred to as the CHROMATRON or a "post-acceleration deflection" picture tube. As shown in Figure 21, this tube has only a single gun, but the screen is divided up into very narrow lines of color phosphor behind which is a network of parallel grid wires in which alternate wires are connected together.

As shown at position A, with equal voltages applied to the X and Y wire groups the beam strikes the green phosphor in the center. When X is positive with respect to Y the beam is deflected to the blue phosphor as shown at B. In similar manner when X is negative with respect to Y the beam is deflected to the red phosphor as shown at position C. Consequently, the voltage changes on the wire grids change the colors from green to red or blue as needed. With real fine phosphor lines, the colors blend to give the color picture.

Although only a single gun is required, this tube does have disadvantages. Powerful signals are required to cause the rapid deflection of the beam from one phosphor line to the next and large voltages between grids X and Y and the screen tend to cause dielectric breakdowns and damaging arc-overs.

Chromoscope

Another color-tube devised by Dr. Bronwell of Northwestern University is called the chromoscope. Closely spaced but insulated from each other, four semi-transparent screens are arranged in layers behind the tube face. Screens R, B, and G are coated with phosphors which make one emit red, one blue, and the other green light. The fourth screen, P, does not add color, but is maintained at a constant potential to aid in focusing the beam.

When struck by beam electrons, each color will fluoresce only if a positive potential is applied. Therefore, the sampling or switching control voltage is employed in such a way as to cause positive impulses to be applied to the three color screens in sequence at the desired sampling rate, while the video signal is applied to the grid of the electron gun. Produced on the semi-transparent screens, the three color images appear superimposed to the observer who therefore, receives the impression of a complete color picture as though it existed on a single screen.

Baird System

A picture tube developed by the late John Logie Baird, of England, uses a three gun tube and a special screen of green, red, and blue phosphors. The screen consists of a thin sheet of transparent mica, ridged on one side and flat on the other. One side of each ridge is coated with blue-emitting phosphor and the other side with green-emitting phosphor, while the flat side of the screen is coated with red-emitting phosphor. Each electron gun is placed at the proper angle so that its beam will strike only one phosphor. Because the screen is transparent all three color images can be seen from either side and thus appear superimposed to the observer.

Trichromoscope

One unit developed by Allen B. DuMont Laboratories has the inside of the picture tube face molded into 300,000 small 3-sided pyramids. All pyramid sides facing in one direction are coated with a phosphor that glows red. All sides facing in a second direction are coated with a phosphor which glows blue and the remaining sides are coated with a phosphor which glows green. Three electron guns are mounted so that the beam from each bombards a different colored side of the pyramids. As the screen is transparent, a 3-color picture is seen by an observer looking at the tube face.

Both the Baird tube and the trichromoscope have the disadvantage in that each gun requires its own set of deflection coils. It is rather difficult to have the deflection voltages always matched when using separate coils.

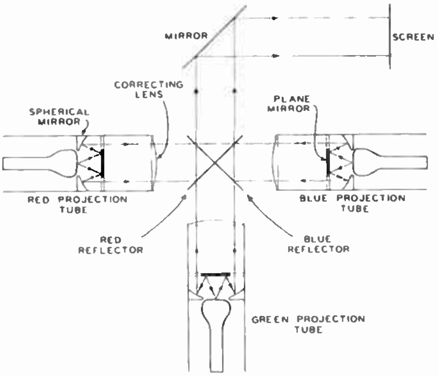

The diagram of a projected color television system. The three colors are provided by separate tubes and, reflected by the special mirrors, are superimposed on the screen.

Tri-Color Picture Tubes

Developed by RCA for use with the dot sequential transmission system, two types of single three-color picture tubes are illustrated in Figure 22. Both of these tubes use only one deflection yoke and have special screens composed of an orderly arrangement of tiny, closely-spaced, aluminized phosphor dots. The dots are in triangular groups such that each group contains a red-emitting dot, a green-emitting dot, and a blue-emitting dot. The entire screen has 342,000 such groups, for a total of 1,026,000 phosphor dots. Between the electron guns and the phosphor screen is a metal mask, the same size as the screen. This mask contains 342,000 regularly spaced holes, one for each tri-color dot group on the screen.

In the three-gun unit, Figure 22A, the video signal is applied to the three grids which are internally connected in parallel, and the switching control signals from the keyers are applied to the three separate cathodes as shown. Thus, controlled by the three-phase output of the sampling signal generator and keyer units, the three guns are turned on one at a time in sequence as the color signal samples are received.

Each hole in the mask is so located with respect to its associated dot group on the screen that the difference in the angle of the three oncoming electron beams determine which color-emitting dot is struck at any instant. Thus, three independent single color pictures are produced but, to the eye, these three pictures appear to be superimposed because of the close spacing of the extremely small phosphor dots.

In the single-gun unit, Figure 22B, an additional yoke is employed to cause circular rotation of the cathode ray beam at the rate of

3.58 mc per second. This action causes the single beam to occupy, in time-sequence, the three positions of the beams of the 3-gun tube. The mask and dot-group arrangement is the same as in the other tube also, therefore three seemingly superimposed pictures are formed as before. To make the cathode cause the gun to operate at three 120° spaced intervals during each complete switching cycle, a circuit resonant at 3 times 3.58 mc is employed to produce a 10.74 mc sine wave which is applied to the cathode as shown.

SIMULTANEOUS TRANSMISSION

Each one of the transmission systems described so far is a sequential system; that is, the three colors are transmitted in sequence, one after the other. The basic difference is the rate at which this color switching is carried out.

Known as the NTSC System, because it follows standards adopted by the National Television Standards Committee, a more recent development utilizes a simultaneous method of color transmission. This system now is undergoing intensive research and tests by various manufacturers. Since it has been adopted by the FCC for broadcast television, we will examine some of the important features at this time.

Instead of sending green, red, and blue pictures in rapid sequence to be blended by the persistence of the eye into a color picture, the NTSC color system employs two simultaneous signals: (1) the MONOCHROME signal which supplies LUMINANCE (how bright each picture element is), and (2) the "color" or CHROMATICITY signal (which indicates in what proportion red, green, and blue are required to produce the proper hue for that portion of the picture).

The monochrome signal is identical with the present black and white broadcasts; precisely the same signal is transmitted as radiated by the present transmitters. Consequently, any present black and white receiver which intercepts these color broadcasts will produce a normal black and white picture.

Therefore, this color system is completely compatible. That is, all of these color transmissions can be received on present receivers in black and white and all black and white transmissions can be received on the color receivers. So complete is this feature that a black and white set owner has no way of knowing whether he is receiving a black and white or a NTSC color signal.

In addition to the monochrome signal, a chromaticity signal also must be radiated to control the color on the color receiver screen. Since the monochrome signal occupies 5.25 mc of the standard 6 mc channel, sufficient room isn't left to transmit the color information either above or below the monochrome signal without interfering with it. Hence, some new approach is needed.

Frequency Interlace

Fortunately the monochrome signal does not fill the entire 5.25 mc band. Instead, the video side bands are bunched in regularly spaced groups above and below the carrier. Why this is so can be seen by considering Figure 23.

As the scanning progresses line by line from top to bottom every vertical line in the picture, like line A of Figure 23, is crossed at the line frequency. Scanning line 102 crosses A about 1/15734th of a second later than 101. In like manner, successive lines 103, 104, etc. each cross A at 1/15734th of a second intervals later. As a result, all video frequencies related to line A are at the fundamental or harmonics of 15734 cycles per second.

When a line in the scene is not vertical but tilted as shown by line B in Figure 23, each successive horizontal scan crosses it slightly sooner than when vertical like A. As a result the video frequencies developed are at frequencies slightly higher than those for the vertical line A.

In a like manner, since line C "leans" in the opposite direction, it is crossed at a slower rate, and therefore, lower video frequencies are developed. Moreover, even when tilted as far as line C, the variation of the video fundamental from the line frequency does not exceed 300 cycles per second.

Therefore, the vast majority of the video frequencies developed are grouped around 15734 cycles per second and its harmonics.

As a result, the sidebands transmitted by the monochrome signal occur in bunches very much in the manner pictured in Figure 24A. On and just above and below the frequencies every 15734 cycles from the carrier a group of important sidebands appear. Between is nothing or sidebands of insignificant amplitude.

FREQUENCY INTERLACE utilizes the vacant areas left by the grouped sidebands by sandwiching the color subcarrier's sidebands half way between the monochrome frequencies as pictured in Figure 24B. This interlace is accomplished by modulating a 3.579545 mc subcarrier with the color signals and then modulating the monochrome or main carrier with the subcarrier sidebands.

Since the subcarrier is the 455 harmonic of half the line frequency (7867 cps), the subcarrier and its sidebands fall midway between the monochrome sideband groups as indicated in Figure 24B by broken lines. Hence, much more information is crowded in the 6 mc channel without one affecting the other.

Since the eye cannot determine the color of very small picture elements, it is not necessary to transmit high frequency chromaticity signals. As a result, the color sidebands occupy only a small portion of the channel as illustrated in Figure 24C. Also using vestigial sideband transmission, the color signal appears only in the upper 2 mc of the region occupied by the over-all video signal.

It should be added that since the color is transmitted on an odd harmonic of one half of the line frequency, the color signals are 180° out of phase on successive frames, and therefore, they cancel leaving no visual effect on black and white screens. Hence no changes or additions are required to receive NTSC color signals in black and white on present day monochrome receivers.

Monochrome Signal

In the color camera, dichroic mirrors separate the scene into three primary colors; red, green, and blue; and apply each color to one of three camera tubes. As shown in Figure 25, the outputs of these tubes are fed to a "matrix" which adds or phase inverts and subtracts these three signals in the proper proportions to give three different outputs which are labeled Y, Q, and I.

The Y signal is referred to as the monochrome or LUMINANCE signal since the proportions of red, green, and blue signals in it are just right to produce a good black and white picture on the conventional monochrome receiver. Moreover, since the first four megacycles of this signal modulate the video transmitter, it serves exactly the same functions as the conventional black and white signals.

Color Signal

At the same time, two other signals are produced by the matrix, the Q and I signals. Since these two signals are combined to control the color reproduction in the receiver, they are called the CHROMA signals. After the Q signal is amplified and passed through a 0—.5 mc low pass filter it is applied directly to a balanced modulator. The I signal also is amplified and then filtered by a 0—1.5 mc low pass network. But it must pass through a delay network so that it is applied to a balanced modulator at the same instant as the Q signal which has been delayed by the 0—.5 mc filter.

The low pass filters block the high frequency color components which add little or nothing to the visible quality of the picture. At the same time they prevent "crosstalk" which occurs when high frequency signals are mixed in circuits of limited bandpass.

The I signal modulates the 3.5 79545 mc subcarrier directly while the Q signal modulates a same frequency after it is shifted by 90°.

Consequently, the sidebands produced by the balanced modulators come from carriers 90° out of phase with each other.

The balanced modulators suppress the carriers, therefore only the side bands modulate the video transmitter. The delay lines in the Y and I signal paths assures that all three signals are applied to the transmitter video modulator in correct phase.

The Color Receiver

At the color receiver, this composite signal is selected, converted to i-f frequencies, amplified, and detected in the same manner as a conventional receiver as shown in Figure 26. After passing through a contrast control and video amplifiers, the signal is split three ways.

The signals applied to the sweep sync circuits and the monochrome or Y′ amplifier are handled the same way as a conventional black and white receiver except for a delay line in the Y′ signal path which is added to bring the brilliance on Y′ signal in phase with the chroma signals at the picture tube.

The third portion of the composite video is passed through a high pass filter to get rid of unwanted low frequency Y′ signals as well as field and line sync pulses. After passing through another contrast control called the CHROMA CONTROL, the signal is applied to two like circuits called SYNCHRONOUS DETECTORS. These I and Q detectors will detect only those sidebands for which a carrier of proper phase is present. When the carrier is 90° out of phase, no detection occurs. Therefore, the subcarrier frequency used at the transmitter must be supplied by a color burst oscillator at the receiver and applied to each synchronous detector in correct phase to detect the I and Q signals.

If it is applied in phase with the carrier needed for the Q signal and 90° out of phase with the carrier required for the I signal, only the Q signal appears at the output of the detector. On the other hand, if the oscillator output is shifted by 90° and applied to the I detector, only I signals appear in the output. Hence, by using two synchronous detectors and feeding the oscillator output to them 90° out of phase or in quadrature, the I and Q signals are separated.

However, complete separation depends on the carrier being in phase with one signal and 90° out of phase with the other. When some other phase relationship exists a mixture of the two signals appears in each output. In fact the carrier frequency must be within 5° of correct phase to give the signal separation needed for good color reproduction. Therefore, a burst of 8 cycles of the transmitter subcarrier is radiated immediately after each horizontal sync pulse to synchronize the receiver subcarrier oscillator with the one at the transmitter. The signal, applied to the color afc circuit, keeps the oscillator on frequency and within 2° of the correct phase.

After passing through low pass filters to get rid of undesired components, the phase relationship between these signals is corrected by the delay line in the I signal path. Then the proper portions of the Q and I signals are applied to adders to give the R′—Y and B′—Y′ signals. These signals are the colors with the brilliance removed. That is, R′—Y′ is the red signal minus the monochrome signal produced by the transmitter matrix. In like manner B′—Y′ is the blue signal minus the monochrome signal.

Since a G′—Y′ signal also is needed, portions of the R′—Y′ and B′—Y′ signals are phase inverted and applied to a third adder to give the G′—Y′ signal.

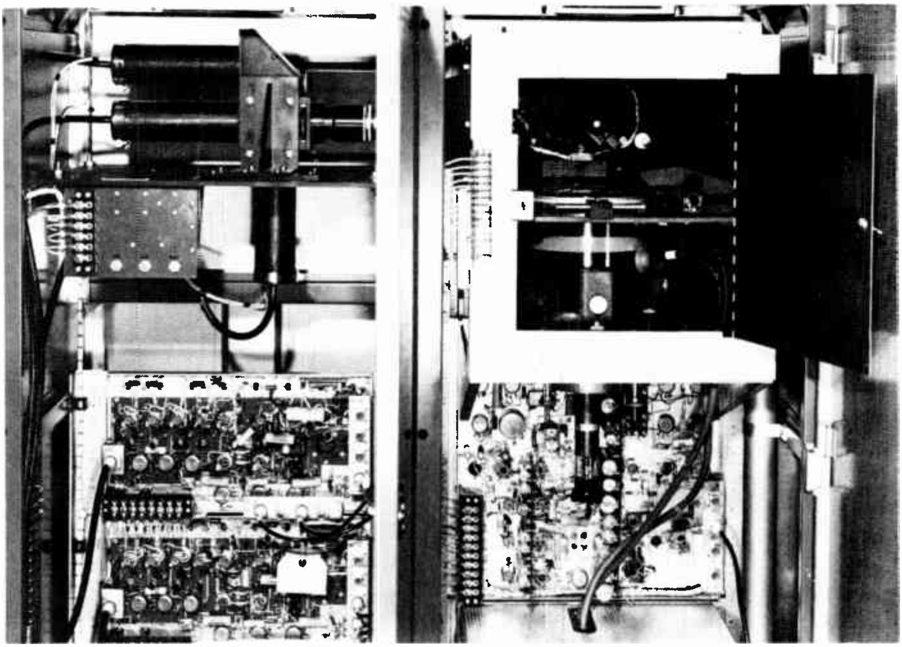

Internal view of a slide scanner designed for color television.
Courtesy Allan B. DuMont Labs. Inc.

Finally, the Y′ signal is applied to each tube gun grid and the R′—Y′, B′—Y′, and G′—Y′ signals are applied to the respective cathodes. Therefore, between the grid and cathode of the blue gun, the voltage is B′—Y′+Y′ or B.′ In like manner, applied to the green gun is G′—Y′+Y′ or G′ and on the red gun the signal is R′—Y′+Y′ or R′. Since each gun receives the appropriate signal, the picture is reproduced on the screen in full color.

In concluding, we would like to add that this is a description of the basic action—many details were left out. These shall be added later. However, from the important actions described we should recognize these facts. The simultaneous transmission of a color signal is possible because: (1) The eye doesn't see details in color, (2) frequency interlace makes it possible to add more information to a six megacycle channel, and (3) synchronous detectors make it possible to separate color signals.

* * *

STUDENT NOTES

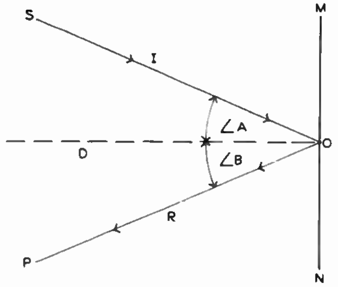

FIGURE 1

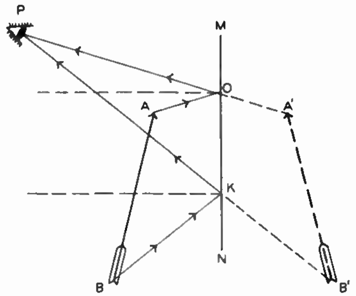

FIGURE 2

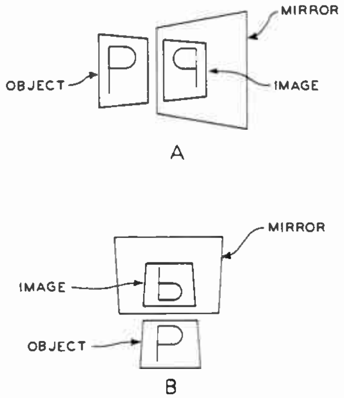

FIGURE 3

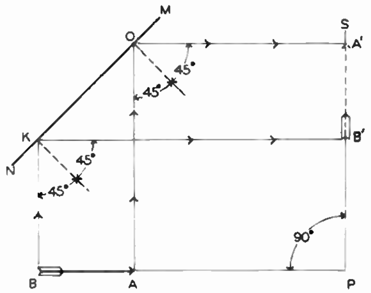

FIGURE 4

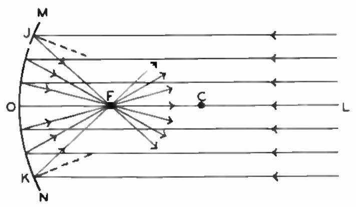

FIGURE 5

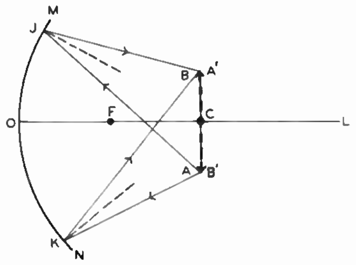

FIGURE 6

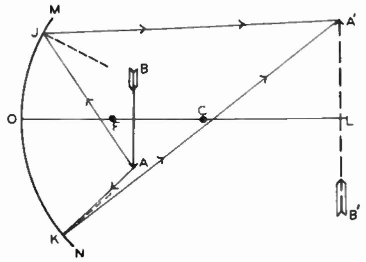

FIGURE 7

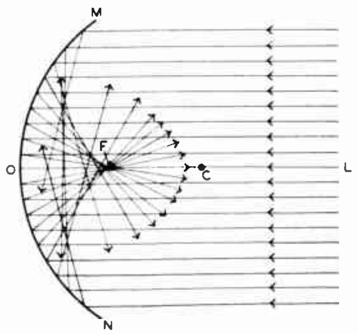

FIGURE 8

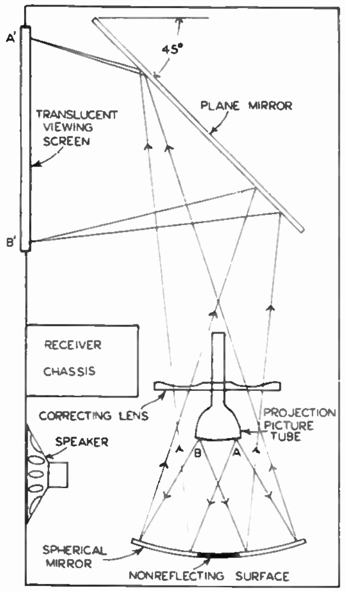

FIGURE 9

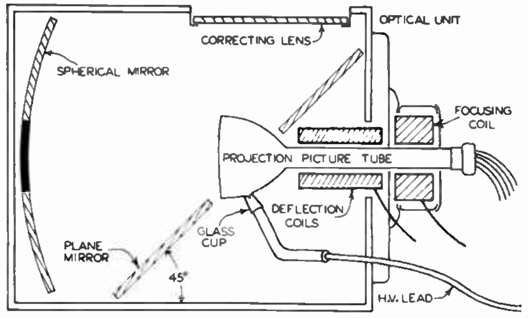

FIGURE 10

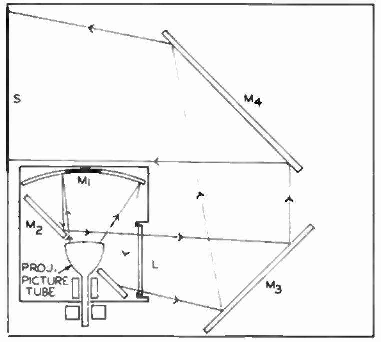

FIGURE 11

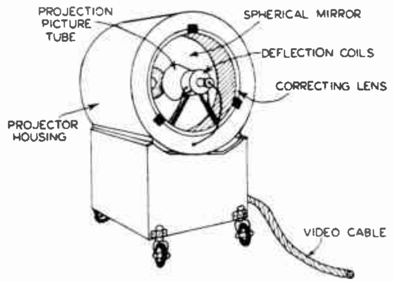

FIGURE 12

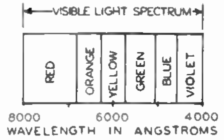

FIGURE 13

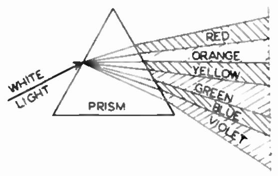

FIGURE 14

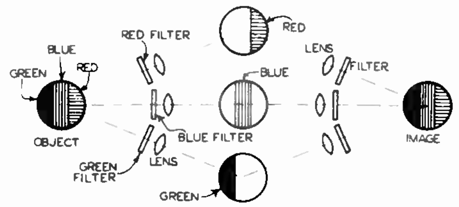

FIGURE 15

A

B

FIGURE 16

STUDENT NOTES

SCANNING PERIOD	FIELD	FRAME		COLOR FRAME			COLOR PICTURE					
TIME INTERVAL IN SECONDS	$\frac{1}{144}$	$\frac{1}{72}$		$\frac{1}{48}$			$\frac{1}{24}$					
LINES SCANNED	EVEN	ODD	EVEN	ODD	EVEN	ODD	EVEN	ODD	EVEN	ODD	EVEN	ODD
COLOR OF FILTER	R	B	G	R	B	G	R	B	G	R	B	G

FIGURE 17

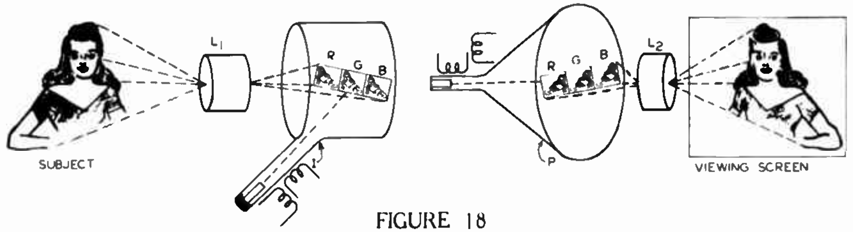

FIGURE 18

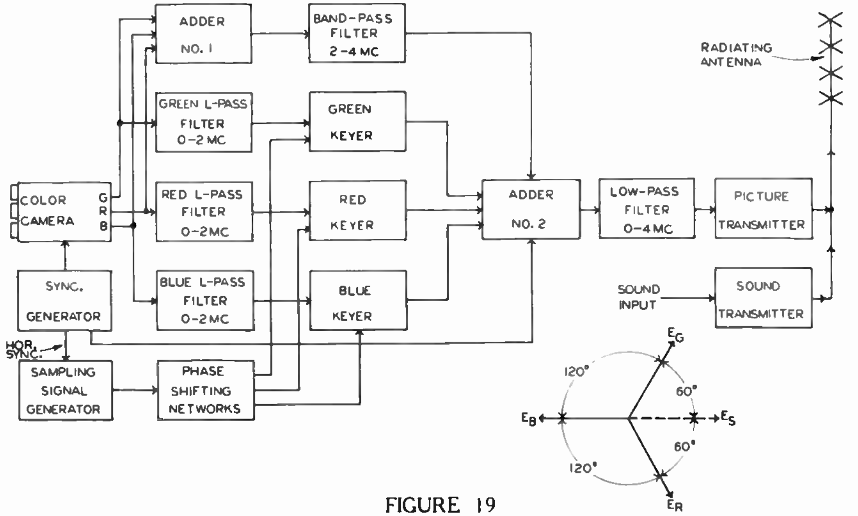

FIGURE 19

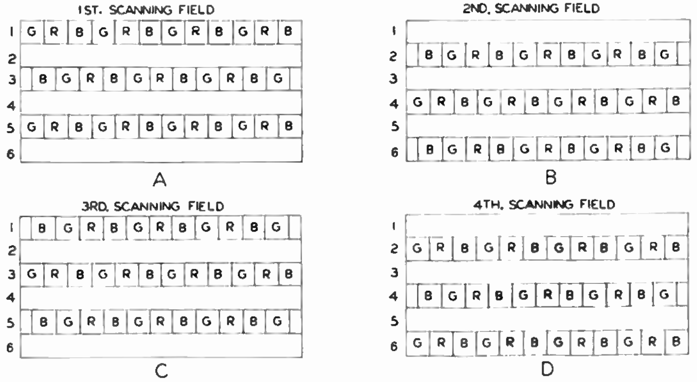

FIGURE 20

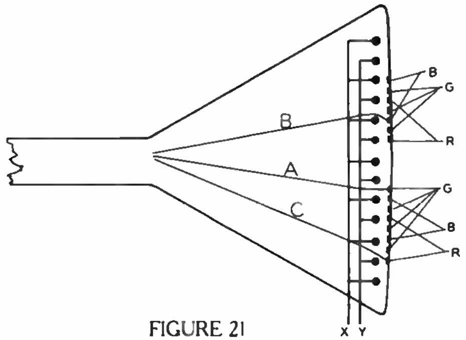

FIGURE 21

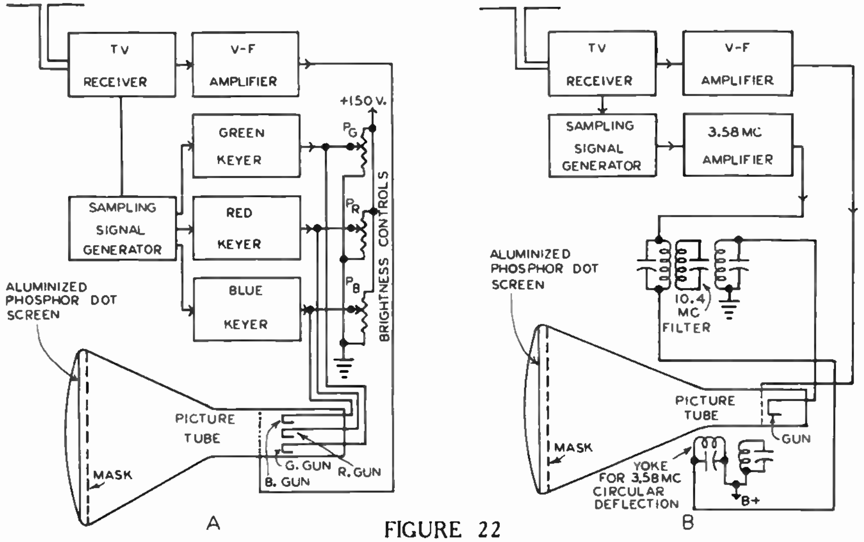

FIGURE 22

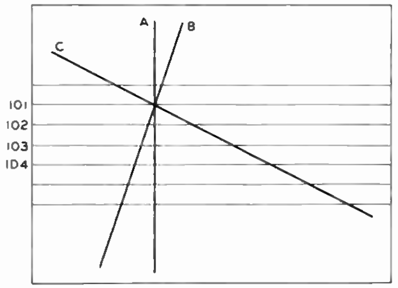

FIGURE 23

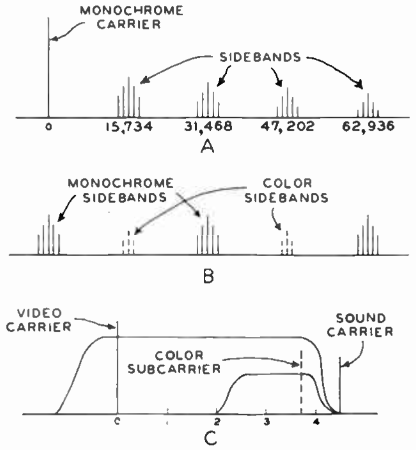

FIGURE 24

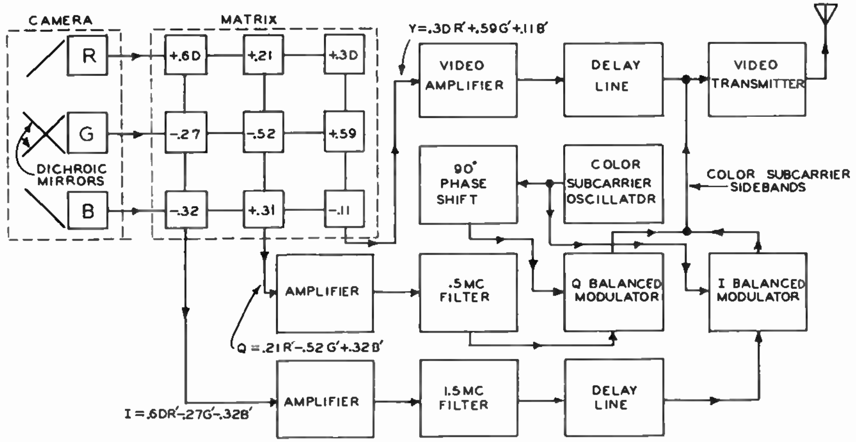

FIGURE 25

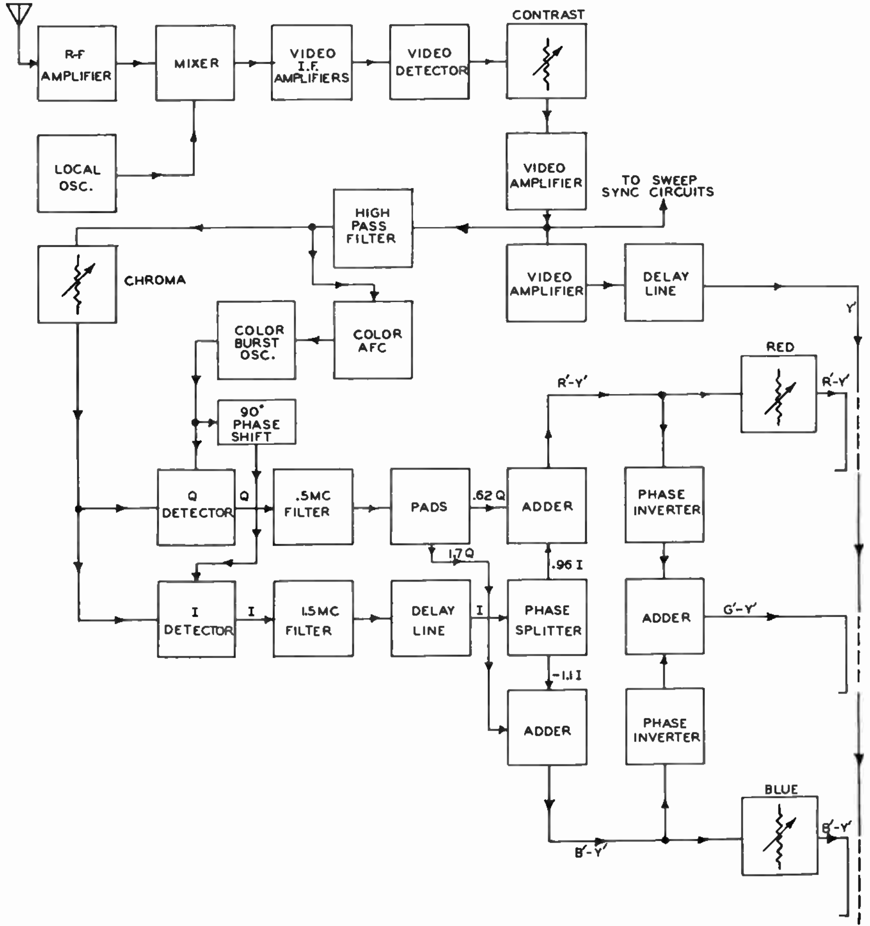

FIGURE 26

Cut along this line and send in for grading

DeVRY Technical Institute

Formerly DeFOREST'S TRAINING, INC.

4141 WEST BELMONT AVENUE CHICAGO 41, ILLINOIS

QUESTIONS

Projection and Color Television—Lesson TPC-20B

3

How many advance Lessons have you now on hand?..........................

Print or use Rubber Stamp.

Name.. Student No......................................

Street.. ....Zone......................... Grade................................

City...State................. .... Instructor..........................

Write your answers on the "Ans." line below each question. If more space is needed use reverse side of this page.

1. **What is the approximate relationship between the desirable picture height and the viewers distance to the screen?**

Ans...

2. **State the first law of reflection.**

Ans...

3. **In the optical projection system of Figure 9, what is the purpose of the correcting lens?**

Ans...

4. **In television projection arrangements of Figures 9, 10, and 11, what is meant by the "throw"?**

Ans...

5. **When not a source of light, why does an object have a definite color?**

Ans...

6. **What are the two basic methods of producing colored television images?**

Ans...

7. **From the chart of Figure 17, how many successive color frames are required to form a complete color picture?**

Ans...

8. **What is a dichroic mirror?**

Ans...

9. **How many complete color pictures per second are transmitted by each of the following: (a) CBS field sequential system, (b) CTI line sequential system, (c) RCA dot sequential system, (d) NTSC simultaneous.**

Ans...

10. **Why is color information transmission of very small objects relatively unimportant?**

Ans...

FROM OUR *Director's* NOTEBOOK

KINDNESS

If I were utterly selfish, and if there were no other merit in Kindness, I would try to cultivate the habit of Doing Kindly Deeds for others that I might reap the benefits I know would be my certain reward.

Kindness is regarded as a cardinal virtue by the followers of all religions, none of whom can claim its discovery. But if all religion were destroyed, Kindness would still be practiced. It would be considered Good Business.

The Kindly man or woman is the personification of the Golden Rule. He or she speaks or acts with full Consideration for how a Friend, a Neighbor, a Business or a Community might, by word or deed, be Injured or Benefited.

This is no "brief" for Kindness as one of the keys to Eternal Life. It is a statement of fact concerning the Positive Return in Material Gain from an investment that first pays one more than adequately in Spiritual Satisfaction.

Yours for success,

W. C. DeVry

DIRECTOR

PRINTED IN U.S.A.

1

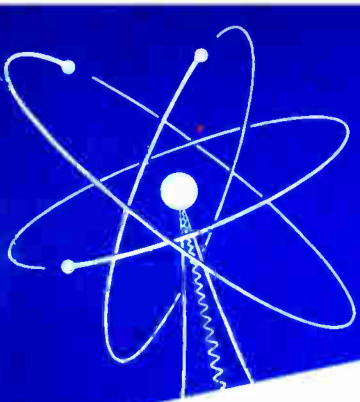

COLOR

Lesson COL-1B

DeVRY Technical Institute

4141 W. Belmont Ave., Chicago 41, Illinois

Formerly DeFOREST'S TRAINING, INC.

COL-1B

COLOR

4141 Belmont Ave.

DeVRY Technical Institute

Chicago 41, Illinois

The 15-inch picture tube of this television receiver produces pictures in full color or black and white, depending upon the program being received.

Courtesy Admiral Corporation

COLOR

Contents

Imagination is the secret reservoir of the riches of the human race.

—Maude Linstrom Frandsen

COLOR

Human vision greatly resembles a closed-circuit television system. The eye picks up the reflected light from a scene and converts it to electric pulses that are carried along the optic nerve to the brain center where they are converted into a visual sensation of the original scene.

Normal human vision perceives color. When a scene is viewed, the objects are seen with many different hues. From time immemorial, man has been striving to record the pictures he sees in full color. First came the crude wall paintings of pre-historic man, then came the true artist with his paints and canvas. Later scientific advances produced color photography, and now, color television.

The addition of color to the television art has introduced new problems to the design engineer and service technician alike. In order to permit a clear understanding of color television, they need to know the answers to questions, such as:

1. What is color?
2. How do the eyes distinguish one color from another?
3. How can various colors be reproduced?
4. Why use a three-color system?

Color is such an important part of our daily lives that we certainly take it for granted. To talk about objects of any kind, we ordinarily include their color, as we often may say the wall of our living room is of a deep blue. In our everyday language, we further use such terms as "color matching", a "light color", a "dark color", "neutral color". No one bothers to define the word "color", "blue", "light" or "dark". All you do is just point to the sample and there it is.

Even size, shape, and texture of an object influence its color. Brittleness, etc. are properties of objects which are used to identify the chemical composition by its colors. Color photography and color printing preserve scenes almost as we see them.

For a number of years a precise language on color, set up mainly through the efforts of the American Optical Society, has been used by color TV manufacturers, color chemists, color photographers, color engineers, etc. These people have adopted these words mainly because they must measure various qualities of color. This is done to have a standard which everyone measures by, just as a foot is a standard unit of length.

But we have feelings and emotions toward color and colored objects which are just as real as anything else. These terms as you saw earlier are many and are used loosely. They depend upon the individual taste or point of view. These terms depending upon individual taste, or more precisely sensations, are just as important as the color terms used in **colorimetry**, the science of measuring qualities or aspects of color.

Terms of colorimetry and of color sensation are used side by side. In fact, the terms of color sensation are made more exact in meaning by talking about the sensations of only these color qualities which are measured. Thus, even the description of a color sensation has a more precise meaning to a technician than the every day use of the term.

For an electronic technician to understand color TV, these terms must be known and kept distinctly apart in his thinking.

RADIANT ENERGY

All objects are visible only because light from them enters the eyes. Without light, nothing can be seen; Color cannot be seen apart from light.

Light is but one form of radiant energy that travels with wave motion. It is that part of radiant energy which the human observer senses through the agency of his eyes and associated nervous system.

Light, heat, x rays, certain rays emitted from radioactive substances, and the radiations employed for radio broadcast, television, and communications are all forms of radiant or electromagnetic energy. The one basic difference between these forms is the frequency of the energy.

The graph of Figure 10 shows the frequency relationships for most of the known range. Starting at the upper left, the first solid vertical line represents 1 cycle per second, the second represents 10 cycles per second, the third 100 cycles per second, and so on across the graph. Each solid vertical line represents a frequency ten times greater than the preceding one.

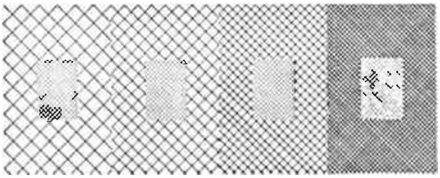

Although the central patch is the same in all cases, it appears to change from dark to light as the background is changed from light to dark. This illustrates how sensations tend to deceive.

Along the top of the graph, the frequency in cycles per second is designated in "powers of ten" to permit writing large numbers in small spaces. The small numeral at the upper right of the ten indicates how many tens must be multiplied together to arrive at the frequency in cycles per second. Hence, 10^2 means 10 × 10 or 100; 10^3 means 10 × 10 × 10 or 1,000, and 10^5 means 10 × 10 × 10 × 10 × 10 or 100,000.

All radiated energy is in the form of waves, the lengths of which vary according to the relationship:

$$\lambda = \frac{c}{f} \qquad (1)$$

where:

λ is the wavelength in meters

c is the velocity in meters per second

f is the frequency in cycles per second.

Electromagnetic waves travel through space at a velocity c of 300,000,000 meters per second. Therefore, Equation (1) may be rewritten as

$$\lambda = \frac{300{,}000{,}000}{f} \qquad (1)$$

Although many of the radiant energy forms usually are designated in terms of frequency, wavelength also is a unit of measure.

Hence, the graph of Figure 10 is provided with a wavelength scale along the bottom. Starting at the left, the first solid vertical line, 3×10^8, represents 300,000,000/1 or 300,000,000 meters, the second line, 3×10^7, represents 300,000,000/10 or 30,000,000 meters, the third 300,000,000/100 or 3,000,000 meters, and so on across the graph. Each line represents a wavelength one-tenth of that of the preceding line. To prevent crowding, wavelengths are shown only for every other vertical line.

Near the middle of Figure 10, the wavelength becomes so short that a new unit of measure is introduced. The standard unit of light wavelength measure, the **millimicron** ($m\mu$) is equal to one one-thousandth of one one-millionth of a meter. For a frequency of 10^{14} cycles per second,

$$\lambda = \frac{300{,}000{,}000}{100{,}000{,}000{,}000{,}000} = .000003 \text{ meter}$$

To convert meters to millimicrons, the decimal point is moved nine places to the right. Thus, .000003 meter is equal to 3,000 millimicrons.

Any given band or range of frequencies is known as a **spectrum.** Hence, the complete graph of Figure 10 is called the "known frequency spectrum," and small parts of it are given such names as "the subsonic spectrum," "audio frequency spectrum," "radio frequency spectrum," and so on.

Toward the middle of the Figure 10 spectrum are located the wave energies of light. These waves have wavelengths ranging roughly from 380 mμ to 760 mμ. Below 380 mμ are the ultraviolet rays, and above 760 mμ are the infra-red or heat rays.

By definition, light is visible; therefore, the word "visible" in the expression "visible light" is superfluous and should be avoided. In a like manner, what is not visible cannot be light. For this reason, ultraviolet "light" is more properly referred to as ultraviolet radiation.

WHITE LIGHT

When radiant energy of all wavelengths between 380 mμ and 760 mμ are presented to the eyes in nearly equal quantities, the sensation of "colorless" or white light is produced. There is no absolute standard for white, because human observers are able to adjust their visual and mental processes to changing conditions.

For example, at night, or during the day at locations where there is very little daylight available, the light from a tungsten lamp is accepted as white. It appears white even though it has far less blue and far more red than daylight. However, in a room illuminated principally by daylight, the light from a tungsten lamp appears distinctly yellow, because the observer's eyes now are adapted for daylight.

Thus, in everyday language no one argues what the color sensation of "white" is to each individual. But for purposes of colorimetry, as we shall find later, a standard "white" is chosen that can be duplicated precisely everytime just as an "inch" of length is standard.

THE SPECTRUM

Under suitable conditions, white light, a group of frequencies, can be separated into its constituent radiations which are represented by individual frequencies. A grand scale example of this separation is the production of a rainbow when sunlight is dispersed by raindrops.

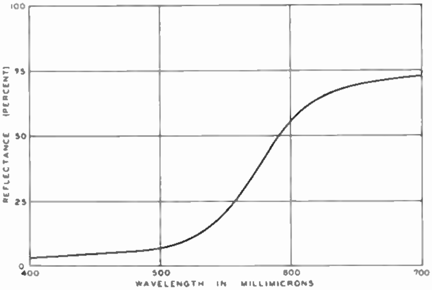

Spectral reflection of an orange peel. Note that the peel does not completely absorb the blue and cyan components of white light.

First described by Sir Isaac Newton although he did not know each color corresponds to a specific frequency, the laboratory method for separating white light into its many parts is illustrated by Figure 1. Although radiant energy with wavelengths between 380 $m\mu$ and 760 $m\mu$ is invisible until it strikes an object and is reflected into the eyes, to illustrate the light path, it is pictured in Figure 1 as being visible.

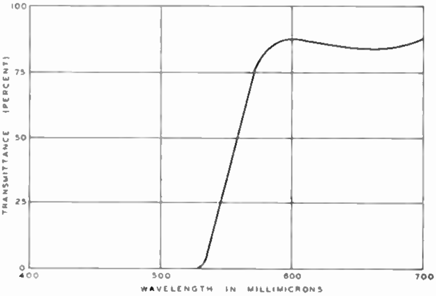

Spectral transmission of an orange glass filter. Note that the glass absorbs all light with wavelengths less than about 530 $m\mu$.

In order to permit normal reproduction of the colors in Figures 1 through 9, they should be viewed under a diffused daylight, not direct sunlight, or the light from an ordinary frosted, tungsten lamp. Avoid the use of mercury or sodium vapor lamps, since they produce a decided change in the appearance of these printed colors. Again, just as each individual has his own taste for food, each individual will have different color sensations when viewing Figure 1. This difference is increased further when it is viewed under different lights.

At the left of Figure 1, a narrow beam of sunlight is projected toward one side of a triangular-shaped piece of glass called a **prism.** When the light rays enter and leave the prism from a direction other than perpendicular to the surface, they are bent or refracted as shown in Figure 1. Because of its shape, the prism bends light rays of shorter wavelength more than those of longer wavelength, thereby spreading the light beam out into a band of colored light called a **spectrum.**

The colors that may be distinguished in Figure 1 are red, orange, yellow, green, blue-green, and blue. Because of the limitations of the printing process, these colors are illustrative only. In an actual spectrum, there are an infinite number of colors. Starting with red at one end, the colors gradually shift with each change in wavelength until the blue end of the spectrum is reached.

The colors produced by the spectrum are the purest possible, because each is seen in isolation.

As a continuation of his prism experiment, Newton passed the rays from the first prism through a second prism which was upside down with respect to the first one. Instead of separating the colors further, the second prism combined all of the rays to produce a beam of white light.

From just this experiment alone, Newton discovered that white can be decomposed into all colors and that to make this same white, all that need be done is to recombine or add all of these colors together. This is the same basic way color TV works. The transmitter breaks up the color into components, and radiates a signal for each component. The receiver recombines these signals to reproduce the original colors.

Further experiments by Newton and others have revealed that visible radiant energy is confined to wavelengths between 380 mμ and 760 μ, and that the following range of wavelengths correspond to the indicated colors:

380 mμ - 450 mμ—violet
450 mμ - 490 mμ—blue
490 mμ - 560 mμ—green
560 mμ - 590 mμ—yellow
590 mμ - 630 mμ—orange
630 mμ - 760 mμ—red

COLOR VISION

In a very general way, the human eye may be compared to a radio broadcast receiver. Both are sensitive to a band of wavelengths. However, the radio receiver is selective in its reception. It can be tuned to one station at a time even though waves from hundreds of stations are present at the antenna.

In contrast, the human eye has no tuning mechanism, and responds simultaneously to all radiations within the visible band, regardless of the wavelength.

Figure 11 shows the International Commission on Illumination standard curve of human eye response. Note that it peaks near the green wavelength of 550 mμ. The 400 mμ and 700 mμ wavelengths are not the absolute limits of visible radiation, but since the eyes are relatively insensitive at either extreme of the band, they are considered the practical visible limits. This curve shows that the sensitivity of the eyes varies with wavelength and that a given amount of light may appear brighter at one wavelength than at another.

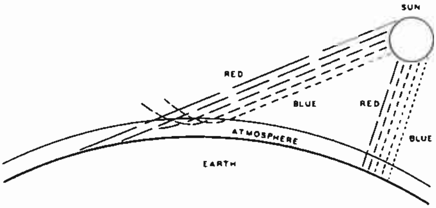

At sunset, the path of sunlight is longer through the atmosphere than at noon, and the increased scattering of the blue and green light makes the sun appear reddish.

Light of one wavelength cannot be distinguished by the eyes unless it is presented alone. For example, the eyes identify a certain green in the spread-out spectrum of Figure 1, but are unable to produce a green sensation from the white light going into the eyes even though they are most sensitive to the green wavelength.

The eyes interpret all of the light that strikes them without analyzing the various mixture of wavelengths. From this, it may be concluded that they do not have separate sensitivity mechanisms for each wavelength of light.

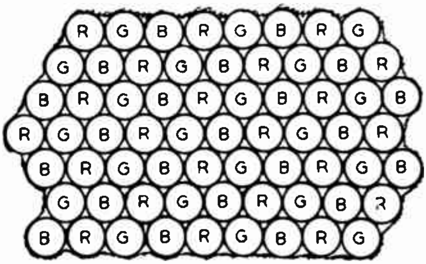

One type of color picture tube screen is composed of approximately 585,000 closely spaced phosphor dots, equally divided between red, green, and blue light producing types. Properly excited by three electron beams, it is capable of producing a wide range of colors.

Overlapping considerably in sensitivity, the red, green, and blue nerve systems from the eye to the brain produce a color sensation because of their unequal stimulation by the light which is reflected into the eyes. For example, a blue-green light stimulates the blue and green systems more than the red system and therefore, produces a brain sensation of blue-green.

Close examination of the communication system between the eyes and brain shows that it involves millions of nerve fibers and connections. Imperfect organization of the optic nerve results in slight variations of color vision among individuals. Also, this may be the cause for color blindness in some pepole.

COLORED OBJECTS

With his many experiments, Newton proved that color is not a characteristic of an object, but of the light that is reflected from it to the eyes. Each of the many colors of the spectrum is absorbed to an extent that is characteristic of each object upon which the light falls. The resultant effect of the reflected light is sensed as the color of the object.

When it is illuminated by a white light, the paper of this page appears white because it reflects practically all of the visible radiant energy and absorbs almost none. On the other hand, the printing appears black because it absorbs almost all of the visible energy and reflects practically none. Between these extremes, the bottom color of the Figure 1 spectrum is perceived as red because the ink reflects the radiant energy that produces the red sensation and absorbs the rest.

If color were a characteristic of an object, the same color would be seen regardless of what kind of light illuminated it. However, different colors are seen when the same object is viewed under different lights. For example, if this page is viewed under red light, the paper appears red, not white. This condition is due to the fact that the paper does not emit white light, but reflects almost equally well all visible radiant energy that strikes it. As the red light contains almost no other visible radiant energy, the only light reflected by the paper is that which produces the red sensation, and the paper appears red.

In the same way, the paper appears green under green light, and blue under blue light. In all cases, the printing appears black because it absorbs almost all of the visible radiant energy and reflects practically none.

COLOR MIXTURES

There are many more colors than those seen in the spectrum. For example, pink, cerise, scarlet, purple, and magenta are well known colors.

As everyone who has used a set of water colors knows, almost any color, including black and white, can be reproduced by making appropriate mixtures of three suitably selected colors called the primary colors. For this purpose, any three colors may be selected so long as two of them cannot be mixed to produce the third.

Subtractive Primaries

Employed in color photography and printing, the SUBTRACTIVE METHOD OF COLOR MIXING depends upon the selective absorption of the various kinds of light by the objects upon which they fall.

Although any three colors may be selected as the primaries, the widest range of colors may be produced when the primaries are yellow, a bluish-red called **magenta**, and a bluish-green called **cyan.**

In Figure 2, glass discs with primary colors of magenta, cyan, and yellow are partly superimposed and placed in front of a source of white light.

At the upper left of the Figure the cyan disc absorbs the red component of the white light and passes all the rest. In the eyes, these components produce a bluish-green sensation which is called "cyan".

The magenta disc absorbs the green component of white light so that the light passing through it produces a bluish-red or magenta sensation. Finally, the yellow disc absorbs the blue component and passes the red-green as a yellow light.

Where the yellow and magenta discs overlap, the yellow glass absorbs the blue component of the white light, and the magenta glass absorbs the green component so that only the red component gets through the combination. Where the magenta and cyan discs overlap, the magenta glass absorbs the green component, the cyan glass absorbs the red component, and the combination passes only blue light.

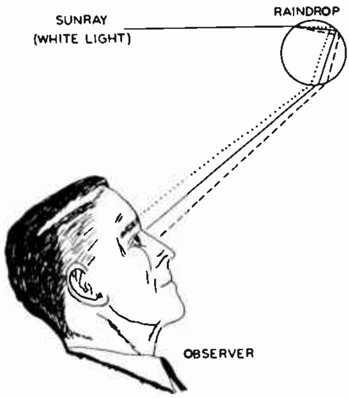

A roindrop octs just like o prism breoking up o sun roy into o beoutiful roinbow.

In a similar manner, only green light passes through the area where the yellow and cyan discs overlap. At the center of the Figure, all three discs overlap slightly and so all of the white light components are absorbed; therefore the area appears black.

To produce intermediate colors by the subtractive method, the relative strengths of the three primary colors must be varied.

Additive Primaries

Employed on the theatrical stage, in certain color measuring systems, and in color television, the ADDITIVE METHOD OF COLOR MIXING depends upon the stimulation of the red, green, and blue light sensitive systems of the eyes to produce the various color sensations.

For this system of color mixing, any three colors may be used as the primaries, so long as two of them cannot be mixed to produce the third. However, the widest range of colors may be produced when the selected primaries are a **RED**, **GREEN**, and **BLUE**.

The exact nature of the primaries is variable. They may even be colors produced by passing white light through individual color filters like those pictured in Figure 2. Inasmuch as matching a wide range of colors with red, green, and blue lights involves the addition of the colored lights, the primary colors often are referred to as the ADDITIVE PRIMARIES.

In Figure 3, light beams with primary colors of red, green, and blue are projected onto a flat, white screen so as to produce three slightly overlapping circles of colored light. The gray area outside the colored circles represents the unlighted portions of the screen.

Because the screen reflects all of the visible radiant energy equally well, it does not change the color of the light striking it. Hence, where the red, green, and blue beams strike the screen by themselves, areas of corresponding color are produced.

Where the red and green circles overlap, both colors are reflected equally well, and the area appears yellow. However, the yellow seen is not that observed in the spectrum between the approximtae wavelengths of 575 mμ and 590 mμ. Instead, it is the sensation produced by the stimulation of the red and green light sensitive systems of the eyes by the reflected radiant energy.

Where the blue and green circles overlap, the resultant is a bluish-green or cyan sensation produced by the stimulation of the blue and green light sensitive systems of the eyes. In a like manner, the overlapping of the blue and red circles produces a magenta sensation. At the center of the screen, the three color circles overlap slightly. The resulting stimulation of the three light sensitive systems of the eyes produces the sensation of white.

By mixing red, green, and blue light in the proper proportions, a wide variety of colors, including the purples and magentas which do not occur in the spectrum, can be produced. Spectrum colors and some others can only be approximated, but all others can be matched. The quantities of the primary colors required to produce any desired color are known as the **tristimulus values** of the mixture.

Not only can white light be produced by mixing the proper amounts of all of the spectrum colors or just the three primary colors, it also can be produced by mixing two properly selected colors.

In Figure 3, cyan is a mixture of blue and green lights; hence it can be mixed with the proper amount of red light to produce white light. Likewise, yellow is a mixture of red and green, and can be mixed with blue to produce white.

When two colors can be mixed together to produce white, they are said to be COMPLEMENTARY. Thus, cyan is complementary to red, yellow is complementary to blue, and magenta is complementary to green.

We have already explained what the wavelength of a color is. As we mentioned earlier, for two colors having almost identical wavelengths it is difficult to distinguish their hue. However, there are some colors which do not have hue. These are white, black, and the millions of shades of grey. These are referred to as the **achromatic** colors, while those colors having hue are the **chromatic** colors. Again achromatic and chromatic are color sensation terms. Now what about the wavelength of achromatic colors and how is it measured? The answer lies in Figures 1, 2, and 3. There each of the Figures show that when the proper colors are combined white or even black results from those colors having hue. Thus, achromatic colors are made up of various colors and these colors have wavelengths corresponding to the component hues, and are measured in terms of component colors.

COLOR SENSATIONS

Since visible radiant energy is capable of producing a color sensation, color is a characteristic of light and not of the observed object. As mentioned earlier, only those color sensation terms which correspond to measurable qualities of color are important for color TV. There are three main color sensation terms which fulfill this requirement. These are: brightness, hue, and saturation. These color sensations are not measured, only the light producing these sensations is measured.

Brightness is that quality of color producing a sensation in an observer such that an area seems to emit more or less light.

It means that quality of color can range from light to dark, including the various shades in between. Any color can be dark or light. Color strips in Figure 4 illustrate the continuous change of a color from light to dark.

In Figure 4A, the ink reflects the blue and the red components of the white light and so the color is MAGENTA. At the top of the bar, most of the blue and red components are reflected, making that area appear bright, while very little blue or red light is reflected at the bottom of the bar, and this area appears "dark". Between the top and bottom, intermediate sensations of brightness appear.

Brightness variations of a yellow sample are shown in Figure 4B. This time, however, the brightest area is at the bottom of the Figure, and the brightness decreases uniformly from the bottom to the top of the strip.

Hue is that color sensation producing in an observer an awareness of the different wavelengths of radiant energy. Hue is what we ordinarily describe as a color, for example, that is it is red, blue, yellow, green, etc.

All sensation of hue is produced then by the electromagnetic radiation within the band of wavelengths from 380 mμ to 760 mμ. Again using colored strips in Figures 5A and 5B, our sense of sight tells us there is no marked difference between two adjacent hues, and one runs into the other. Thus, in Figures 5A and 5B, if ink printed on a page could do it, we could produce all the hues denoted by the continuous wavelength chart of Figure 10.

Starting at the top of Figure 5A which represents the shorter wavelengths, the hues gradually blend from cyan through green to yellow. In a like manner Figure 5B starts from where Figure 5A left off at yellow, moves through orange, red, magenta and finally purple.

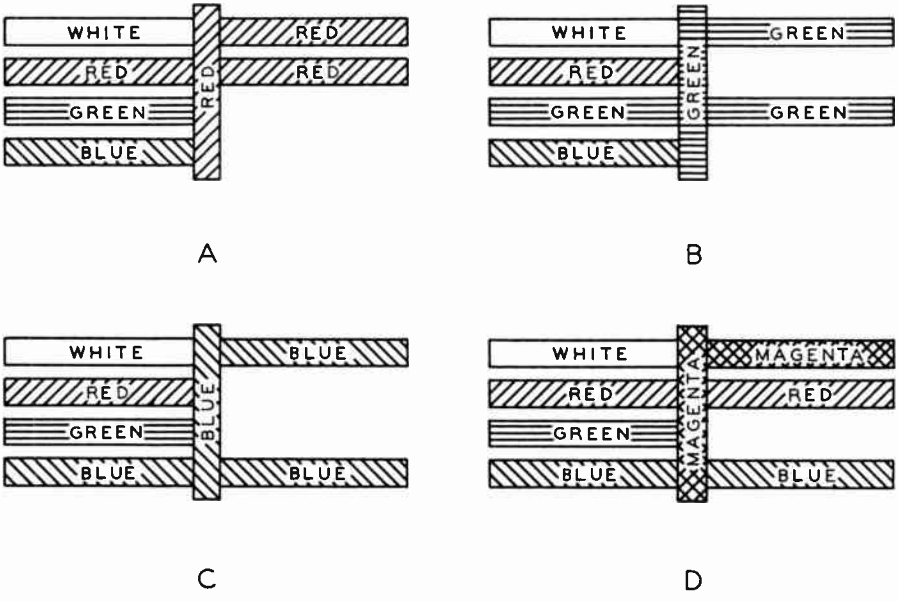

Transmission of light by colored glass filters. A. Red glass stops blue and green beams, transmits the red beam and the red component of white light. B. Green glass stops blue and red beams, transmits green beam and the green component of white light. C. Blue glass stops green and red beams, transmits blue beam and the blue component of white light. D. Magenta glass stops green beam, transmits blue and red beams and the blue and red components of white light.

Saturation is that color sensation an observer describes as vivid, strong, or pale color. It is how free from white a color is. Saturation in popular terms is how much color there is. For instance, if you have a pure red, you can make it lighter in color by mixing white with it. It will turn out pastel, perhaps pink as we call it, but it is really an impure red. White light mixed with any color of light makes it less saturated.

When a beam of sunlight is passed through a prism as in Figure 1, the resulting colors are the most vivid or saturated obtainable, and are considered 100% saturated. Less vivid or more pale colors are obtainable by diluting the spectrum color with white to lower the saturation. Carried to the extreme, the saturation is reduced to zero, all traces of hue disappear and the resultant light is white.

Two samples of saturation variation are shown in Figure 6. At the bottom of Figure 6A, only a little white light is present, and the color is a "deep" cyan. At the top of the strip, a considerable amount of white light is mixed with cyan, and the resultant is a pale or pastel shade of cyan. Intermediate degrees of saturation are obtained by mixing more or less white with cyan.

Saturation variations of a magenta sample are shown in Figure 6B, but this time, the "deep" hue is at the top of the strip and the pastel is at the bottom.

In brief, *hue is that sensation noting differences in wavelengths of light; brightness is that sensation corresponding to luminance differences; saturation is the visual sensation of purity.*

As a convenience, Chart 1 shows the color sensation and their corresponding color measurement terms.

Sensation	**Measurement**
Brightness	**Luminance**
Hue	**Wavelength**
Saturation	**Purity**

CHART 1

Color Measurement

Brightness, hue, and saturation are the three sensation terms which correspond to the three qualities of color which are measured. These are luminance, wavelength or hue, and purity. Often the distinction between the color sensation terms and color measurement terms is not made or loosely made. However, to be technically correct, these measurement terms are distinct since they deal with light which is measured and not individual sensations which are not light and are not measured.

Luminance then is the measure of the amount of light emitted or reflected from an object regardless of its color. That is, disregarding whether the color is red, green, purple, etc. When a red and a green reflect the same quantity of light, they have equal luminance. Since the eye is more sensitive to green than to red, a green object would appear brighter or has more brightness than a red object having equal luminance. Another way to say the same thing is that less luminance of green is required for it to appear as bright as the red. As an example, suppose the luminance of green is .5 units of luminance and that of red is 1 unit of luminance, they would appear equally bright to the average person.

CHROMATICITY

Since the measurement of luminance originated before the evaluation of the other color characteristics of light were proposed, its definition is independent of color. Therefore, although luminance or brightness is one of the characteristics of light used in defining color, it is customary to define it without reference to color.

The remaining two characteristics, hue and saturation, whenever taken together, produce the color quality of light known as **chromaticity**. That is, chromaticity describes everything about light except its brightness.

In color TV, sensation terms are used almost interchangeably with the color measurement terms, and hence chromaticity, hue, and saturation are treated as if they were strictly color measurement terms. Therefore we will use these terms also interchangeably in those cases where no confusion can arise.

CHROMATICITY DIAGRAM

Frequently, attempts are made to describe a color more or less completely by a single term. The difficulty with this system is that the term means one thing to one person and something else to another person. This need for an accurate language of color becomes acute when circumstances do not permit direct comparison of sample colors. Recognizing the need for a basic standard, most important scientific groups, including those developing color television, have adopted the International Commission on Illumination recommendations and the system of color specifications established by them.

It has been shown already that almost any color can be matched by an appropriate mixture of the additive primaries, red, green, and blue. Using these primaries, the spectrum colors and those of nearly the same purity cannot be matched. However, the data obtained by using them may be transformed mathematically to arrive at a set of imaginary primaries with which even the spectrum colors can be matched. That these primaries cannot be obtained experimentally does not detract from their usefulness.

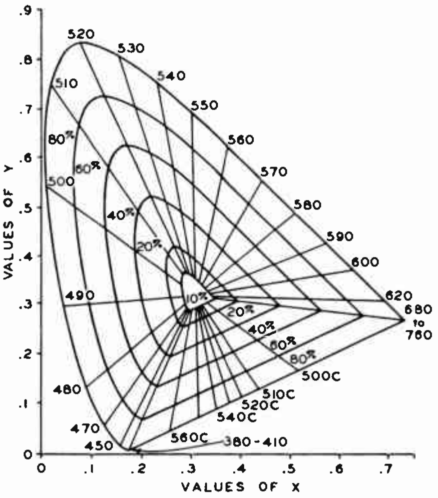

Chromaticity diagram showing lines of constant dominant and complementary wavelength, and curves of constant purity based on achromatic point C.

In effect, the International Commission on Illumination system specifies colors in terms of the quantity of each of the three imaginary or "supersaturated" primaries required to match any color sample.

All objective color measurement systems involve the use of human eyes, or artificial eyes like photocells that have the same color characteristics. The standard color observer's color vision is defined by three color mixture characteristics which are shown as the x, y, and z curves of Figure 12. Derived from the tristimulus values X, Y, and Z, these curves show the relative amounts of the three imaginary lights X, Y, and Z required to produce light of any wavelength shown along the bottom of the chart. Along the left side of the Figure, the relative value scale is in arbitrary units selected for reference purposes only.

One condition placed upon the selection of imaginary primaries was that the luminance of a color be proportional to its tristimulus value Y. That is, color mixture curve y should be the same as the human eye sensitivity curve. Comparison of the curves of Figures 11 and 12 shows this to be the case.

The quantity of each of the three standard primaries required to match any color sample is a specification of the mixture. Thus only the relative values of x, y, and z are necessary in order to specify the chromaticity of any color sample.

For example, reference to Figure 12 shows the relative value of the standard primaries required to match a color with a wavelength of 450 mμ are x = .35, y = .08, z = 1.75. Since the system is based on data accepted internationally, the specification means the same thing everywhere, and is not dependent on the visual characteristics of any one individual.

Chromaticity also can be specified in terms of the proportions of each of the primaries required for a color match. Known as the chromaticity coordinates x, y, and z, these proportions may be computed by dividing the relative values of each of the Figure 12 curves at the appropriate wavelength by the sum of the relative values of the three curves at the same wavelength. Thus:

$$x = \frac{x}{x+y+z}, \quad y = \frac{y}{x+y+z}, \quad z = \frac{z}{x+y+z}$$

Because of the manner in which the chromaticity coordinates are obtained, their sum always is unity. Consequently, only two of the coordinates are independent quantities. Since color is perceived in three ways—luminance, hue, and saturation—the chromaticity coordinates do not completely describe a color. However, they do indicate the hue and saturation.

Chromaticity coordinates are not as suggestive of the appearance of a color as are hue and saturation. However, when they are employed as coordinates of a point in a plane, they provide a very useful representation of chromaticity and the interrelation of the various chromaticities. A diagram resulting from the graphical representation of a group of chromaticities, including those of the spectrum colors, is called a **chromaticity diagram.**

Figure 13 shows the chromaticity diagram based on the standard observer and coordinate system, while Figure 7 pictures the approximate distribution of colors within this diagram. Because of the limitation of modern process color printing, these colors are only illustrative. Some of the colors are identified by wavelength in mμ by the numerals printed alongside the curved line. In both Figures, the horizontal scale represents values of chromaticity coordinate x, while the vertical scale represents values of coordinate y.

Just like any other graph, each point in Figure 13 can be designated precisely by its x and y values. Consequently each possible color has an x and y value in this chromaticity diagram. For example the colors represented by points 1, 2 and 3 in Figure 13 could be called a blue, magenta, and green. Unfortunately, there are many different hues and saturations for each of these color names. The exact hue and saturation must be designated by the x and y values. Thus:

1.	x=.2	y=.15
2.	x=.5	y=.2
3.	x=.2	y=.65

With this sort of designation, only one possible color is indicated for each point.

This diagram is very important because it is what might be called a map of all possible colors. It shows the relationship of any given color sample to all the other colors.

Known as the **spectrum locus**, the horseshoe-shaped curve represents the positions of the colors which have the highest possible purity, that is, the spectrum colors.

The spectrum locus and the straight line joining its extremities often is called the boundary of real colors. Since no colors can be purer than those of the spectrum, there are no colors represented by points outside this horseshoe curve.

Hues represented by points on the spectrum locus are called **spectrum colors**. Pale or pastel hues are represented by points between the spectrum locus and the center of the Figure. They are called **spectral colors** and are in the white portion.

Hues represented by points on the straight line joining the spectrum locus extremities are called **non-spectral colors**. They are the purples and magentas not found in the spectrum.

Less pure non-spectral colors are represented by points in the area between this straight line and the center of the Figure as shown by the shading. Non-spectral colors may be produced by mixing suitable quantities of radiant energy taken from the extreme short-wave (below 440 mμ) and extreme long-wave (above 680 mμ) regions of the visible spectrum.

Another essential of the International Commission on Illumination system is the standardization on a few light sources. The radiant energy distributions of the standards are accurately known and can be reproduced by well-defined means. In Figures 7 and 13, the point representing the chromaticity of a light which is a satisfactory substitute for average daylight is labeled "C". Since this point represents a light that does not produce a hue, it is called the **achromatic point.**

Dominant Wavelength

The **dominant wavelength,** λ_d, of a light sample is the wavelength of a light of single spectral frequency which must be mixed with white in order to match the sample. It is the wavelength associated with the point on the spectrum locus which lies on the extension of a straight line drawn through the sample point from the achromatic point.

Referring to Figure 14, assume that point 1 represents the chromaticity of a color sample of which the dominant wavelength is desired. From Point C, a straight line is drawn through point 1 and extended until it crosses the boundary curve. The wavelength at the point of intersection is the dominant wavelength of the sample. In this case it is 550 mμ.

Colors having chromaticities represented by points within the shaded area of Figure 13 are the non-spectral colors. Lines drawn from the achromatic point C through them do not intersect the spectrum locus, and the colors have no dominant wavelength. In the case of these colors, they are specified in terms of COMPLEMENTARY WAVELENGTH, λ_c, which is defined as the spectral wavelength at the intersection of the spectrum locus and a straight line drawn from the sample point through the achromatic point to the spectrum locus.

Point 2 of Figure 14 lies within the triangle of non-spectral colors. Since a line drawn from C through point 2 does not intersect the spectrum curve, it has no dominant wavelength. However, a straight line drawn from point 2 through C intersects the spectrum locus at a wavelength of 500 mμ. Thus, the complementary wavelength of sample 2 is 500 mμ. In lists of dominant wavelength, such a sample is designated 500 λ_c.

The tristimulus value of a mixture of several lights is the sum of the tristimulus values of the components used in the mixture. Therefore, the point representing the chromaticity of the mixture of two components is located along the straight line joining the two points which represent the chromaticities of the two components.

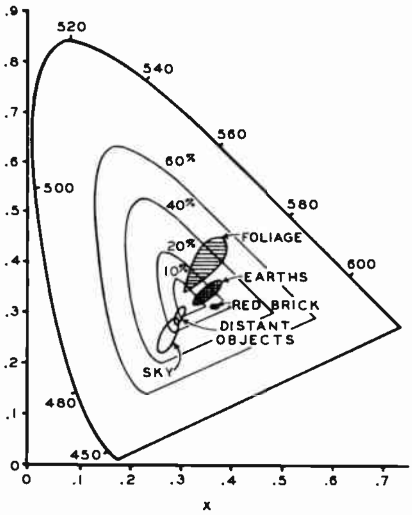

Chromaticities of foliage, earths, brick, distant objects, and sky in daylight. Smaller horseshoe lines represent colors of less than 100% purity.

Point 3 in Figure 14, represents the chromaticity of a color with a dominant wavelength of 456 mμ, and point 4 represents the chromaticity of a color with a dominant wavelength of 570 mμ. When these colors are mixed, the resultant color lies somewhere along the line connecting the two points. As the line passes directly through achromatic point C, some particular mixture of the two colors will produce white.

Pairs of different samples of light which produce white when they are mixed in suitable proportions are said to have COMPLEMENTARY CHROMATICITIES. Thus, the chromaticity of point 4 is complementary to that of point 3, and vice versa. Light samples having complementary chromaticities are called COMPLEMENTARY COLORS when their relative luminances are such that they produce white.

Saturation

As given earlier in this lesson, purity is a measure of the mixture of the pure spectrum color with white light. Consistent with this definition, purity or saturation is further defined so as to increase from zero for white to 100 per cent for the spectrum color.

In terms of the chromaticity diagram, the dominant wavelength is the same for all points on any straight line passing through the achromatic point, whereas the purity increases with the distance from the achromatic point.

On the standard chromaticity diagram, saturation is equal to the ratio A/B, where A is the distance from the achromatic point to the sample point and B is the distance from the achromatic point to the point on the spectrum locus representing the dominant wavelength of the sample. For these measurements, any arbitrary scale may be used. For example, the x or y scales can be used.

In Figure 14, the dominant wavelength of sample 1 is 550 mμ. Using the y axis as the scale, distance A_1 is .19 and distance B_1 is .37. Hence, the purity is:

$$\frac{A_1}{B_1} = \frac{.19}{.37} = 51.35\%.$$

In the same way, the dominant wavelength of sample 2 is 500 λc, distance A_2 is .2 and distance B_2 is .27. The purity is

$$\frac{A_2}{B_2} = \frac{.2}{.27} = 74.1\%.$$

Purity, often called saturation, percentages for samples 3 and 4 may be determined in the same manner.

Returning to Figure 13, a smaller closed horseshoe can be drawn inside the chromaticity diagram. All colors on this curve no matter what frequency they represent, have the same 50% purity. This curve is parallel to the larger closed horseshoe and it can be found by plotting each 50% point. Other similar horseshoes may be drawn showing curves of constant purity. Actually, the chromaticity diagram itself represents the plot of colors having 100% purity. At achromatic C then, the purity is 0% because there are no dominant hues present for any color you may consider at this point.

SELECTION OF TELEVISION PRIMARIES

As explained previously, the chromaticity diagram of Figures 7, 13, and 14 are maps of all possible colors. However, they are based upon the use of three imaginary primaries and do not show the range of colors attainable by color mixing.

When two colors are mixed, the resultant color is represented by a point on the straight line joining the points on a standard chromaticity diagram that represent the chromaticities of the component colors. Thus, if any three colors are used as the primaries, the resultant of their mixture must lie somewhere within the triangle bounded by straight lines drawn between the points representing the chromaticities of the primaries.

Known as a COLOR TRIANGLE, the solid-line triangle of Figure 15 indicates the range of colors that can be produced by the mixture of three spectrum colors having the approximate wavelengths of 468 mμ, 537 mμ, and 615 mμ.

As shown, the chromaticities of colors that can be produced by a mixture of three primaries lies within the color triangle corresponding to those primaries. The greater the triangle, the greater the range of colors that can be produced. From this standpoint, it is desirable to use primaries of the highest purity.

However, in modern color television, there is a limited choice of primary lights. They must be capable of modulation as a result of the scanning process. The most practical sources at this time are the fluorescent screens of cathode ray tubes.

From the color reproduction viewpoint, there is little difference whether the primaries are formed through the use of separate phosphors or through the combination of color filters and mixed phosphors. In either case, the receiver primaries correspond to radiance distributions of several wavelengths and are not pure spectrum colors. Hence, the chromaticity coordinates of the primaries are inside the spectrum locus, and the color triangle is smaller than that of the spectrum colors of the same dominant wavelength.

This condition is illustrated in Figure 15, where the red, green, and blue primaries are those selected by the National Television System Committee (NSTC) and adopted by FCC. The dashed-line triangle indicates the range of colors that can be reproduced on the television receiver screen.

The preceding description may be interpreted as meaning that only about half of all distinguishable chromaticities may be reproduced. However, before concluding that color television is impracticable, it must be observed that the colors not reproducable are the heavily saturated blues and greens that rarely occur in nature.

Actually, the primaries selected by NTSC provide a color television system that is capable of reproducing practically all of the colors of costumes and stage settings that might be used in television productions, as well as the more drab colors found in spot news and the other scenes outside the studio. In fact, color television is capable of reproducing a wider range of colors than either color photography or 4 color process printing, and both of these are considered highly satisfactory.

EFFECT OF AREA ON COLOR PERCEPTION

When an observer views a uniform chromatic surface large enough to fill a substantial portion of his visual field, the brightness, hue, and saturation are substantially uniform. However, when the chromatic surface is reduced in size, the retina structure causes color perception to change considerably.

As the colored surface area is decreased, five things happen in succession:

1. Blues become indistinguishable from greys of the same brightness.
2. Yellows become indistinguishable from greys. Browns are confused with crimsons (in hue but not in brightness), and blues with greens. In this range, reds are clearly distinct from blue-green.
3. Blue-greens become indistinguishable from greys.
4. Reds merge with greys of equivalent brightness.
5. For exceedingly small details, normal vision is devoid of all color sensation and only the brightness perception remains.

Very careful experimenting in colorimetry reveals that as the area decreases, colors appear to match some color near or on the shaded area shown on the chromaticity diagram of Figure 16.

Therefore, these colors can be matched by using two primary colors instead of three; an orange-red and a blue-green or cyan. Note that white is included.

Some of the effects of small area on color perception can be observed in Figures 8 and 9. When held at arm's length, the dot of Figure 8A appears to be a shade of red and not the blue-red (magenta) that it actually is. In like manner, the green dot of Figure 8B appears blue. Hence, insofar as the eye is concerned, these two dots could be matched by proper mixtures of orange-red and blue-green.

When the size of the area is reduced further, all color perception disappears. For example, when held at arms length the dot of Figure 9A appears to have no more color than the black dot of Figure 9B. Rather it appears to be a shade of grey instead of the actual blue that a closer examination reveals it to be. In similar manner, if this text is stood up against some object, as you back off, the red dot and green dots of Figures 8A and 8B gradually fade into shades of grey.

In color television full advantage is taken of these visual effects for small areas. The color signals are restricted in bandwidth so that three primaries are used only for large areas, two primaries for small areas like the dots of Figure 8, and only a black and white signal is used for minute details as represented by the dots of Figure 9. Just how these color signals are developed and utilized are described in the following lessons.

* * *

IMPORTANT DEFINITIONS

ACHROMATIC COLOR—[*ak* roh MAT ik KUHL er]—A color which does not have hue. Examples are: white, black, or grey.

ACHROMATIC POINT—The point on a chromaticity diagram that represents the chromaticity of a light that is a satisfactory substitute for average daylight.

BRIGHTNESS—Color sensation producing in an observer such that an area seems to emit more or less light; briefly, the sensation of luminance.

CHROMATICITY—[kroh muh TIS ity]—The characteristic of color consisting of both hue and saturation.

CHROMATICITY DIAGRAM—A diagram resulting from the graphical representation of a group of chromaticities.

CHROMATIC COLOR—[Kroh MAT ik KUHL er]—A color that has hue. Examples are: red, blue, pink, yellow, etc.

COLORIMETRY—[Kuhl er IM e tri]—The science of measuring and specifying color.

CYAN—[SIGH an]—A blue-green color.

DOMINANT WAVELENGTH—(λ_d)—The wavelength of a light of single frequency that must be mixed with white to match a sample spectral color.

HUE—[hyoo:]—Color sensation producing in an observer an awareness of wavelength of radiant energy.

LIGHT—The aspect of radiant energy of which the human observer is aware through the agency of his eyes and associated nervous system.

LUMINANCE—[LOO: mi nanse]—A measure of the quantity of light emitted or reflected by an object.

IMPORTANT DEFINITIONS—(Continued)

MAGENTA—[muh JEN tuh]—A bluish-red non-spectral color.

MILLIMICRON—($m\mu$)—[MIL i *migh* kron]—The standard unit of light wavelength. It is equal to one one-thousandth of one one-millionth of a meter.

NON-SPECTRAL COLORS—Colors represented by points inside the triangle formed by drawing straight lines between achromatic point C and the ends of the spectrum locus in a chromaticity diagram do not have dominant wavelengths as magenta.

PRIMARY COLORS—Those colors which can be mixed to produce any other color. The subtractive primaries are magenta, yellow, and cyan. The additive primaries are red, green, and blue.

PRISM—[priz'm]—A triangular-shaped piece of glass used to separate white light into its colored components.

PURITY—The measurable quantity of white light in a color.

SATURATION—The sensation of color purity.

SPECTRAL COLORS—[SPECK tral KUHL ers]—Colors represented by points between the spectrum locus and the achromatic white on the chromaticity diagram having a dominant wavelength.

SPECTRUM—[SPECK truhm]—Any given band or range of frequencies. The colored band of light produced by a prism.

SPECTRUM COLORS—Colors represented by points on the spectrum locus (excluding those on the non spectral locus such as magenta).

SPECTRUM LOCUS—[SPECK trum LOH kuhs]—The horseshoe-shaped curve drawn through the points representing the pure colors on a chromaticity diagram.

TRISTIMULUS VALUES—[trigh STIM yoo: luhs VAL yoo:s]—The numbers representing the quantity of each of the three standard primaries required to designate any desired color.

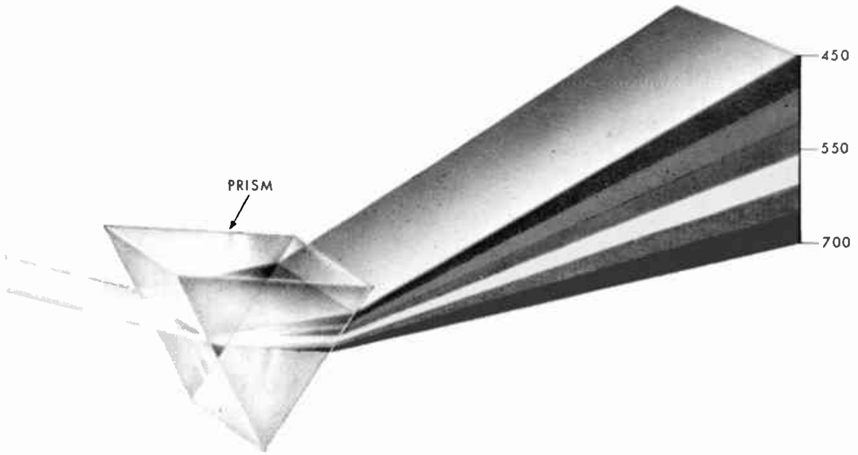

FIGURE 1

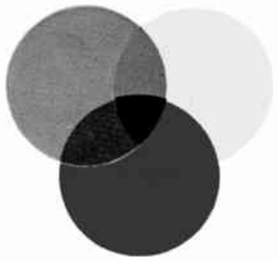

FIGURE 2

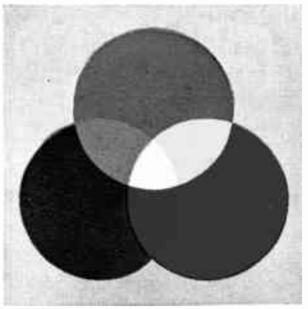

FIGURE 3

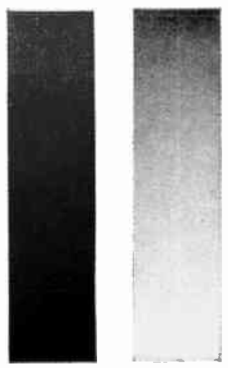

FIGURE 4

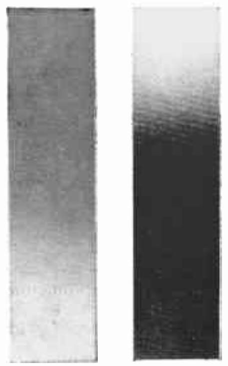

FIGURE 5

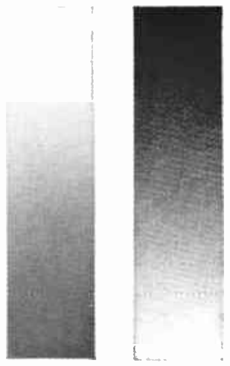

FIGURE 6

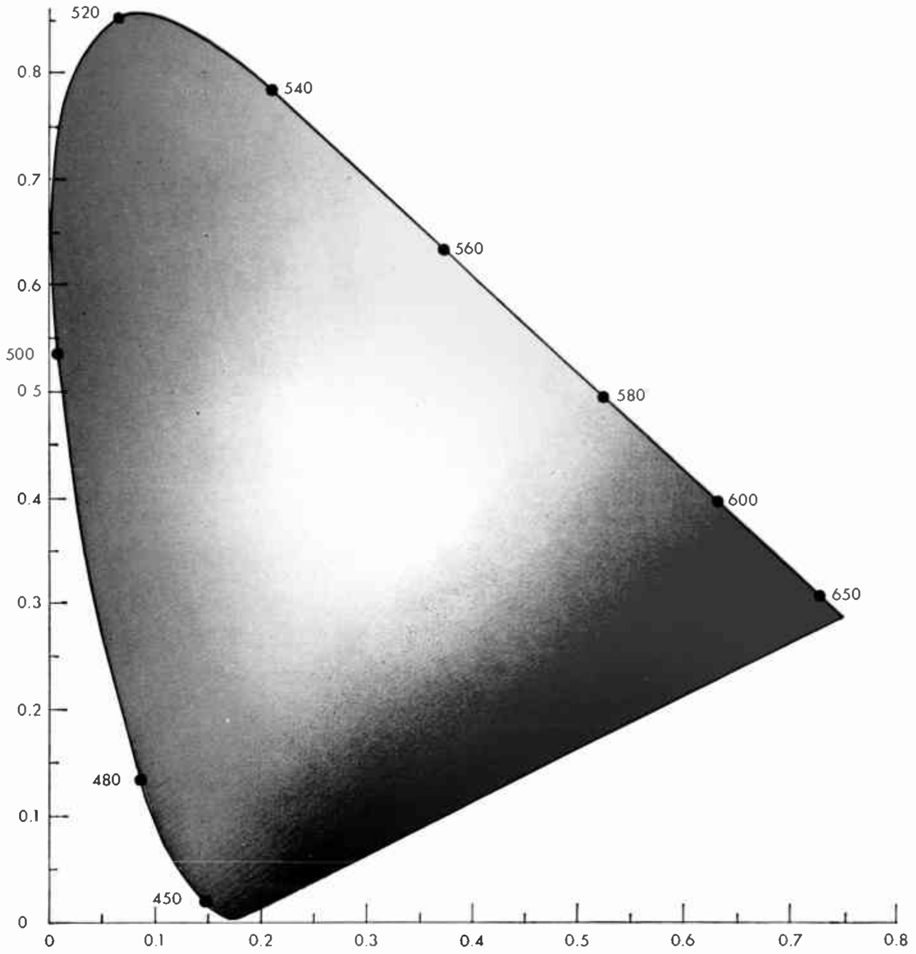

FIGURE 7

A B

FIGURE 8

A B

FIGURE 9

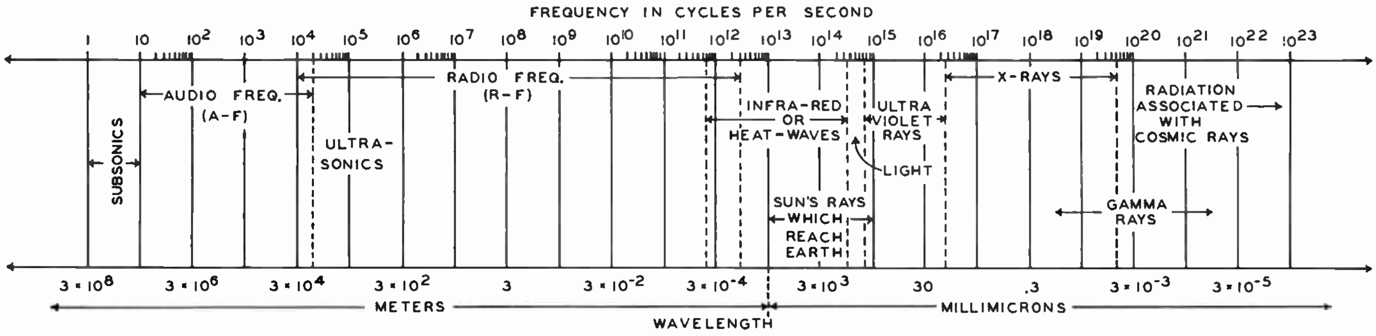

FIGURE 10

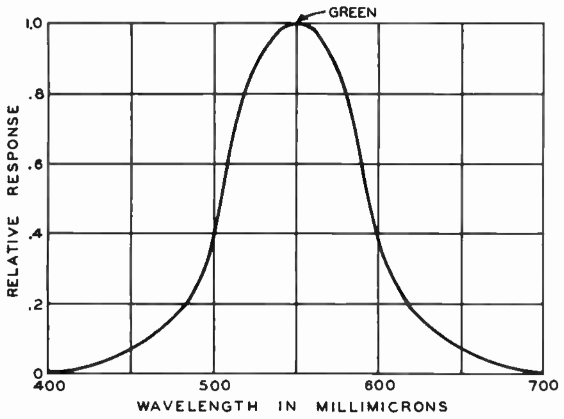

FIGURE 11

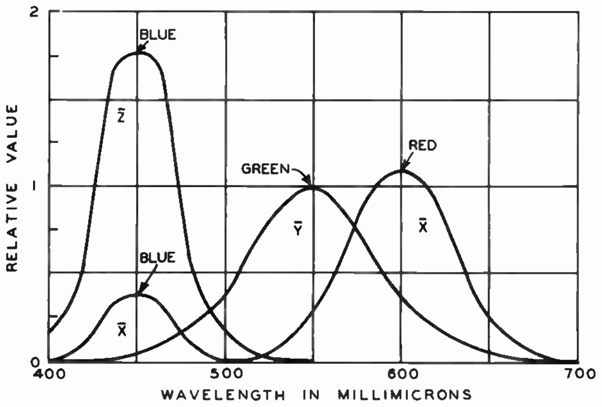

FIGURE 12

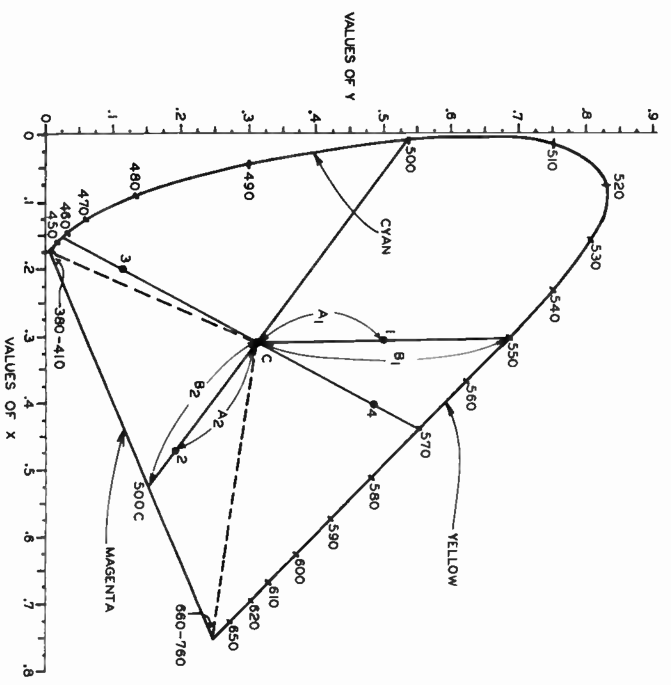

FIGURE 14

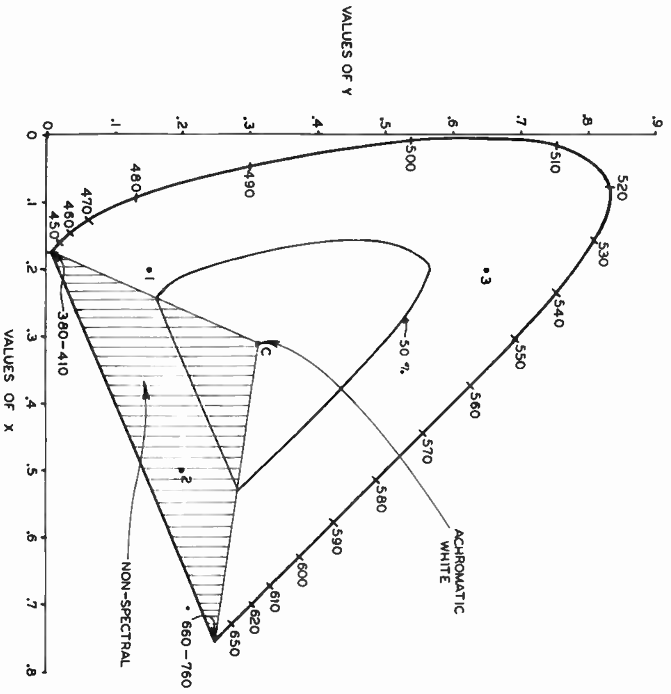

FIGURE 13

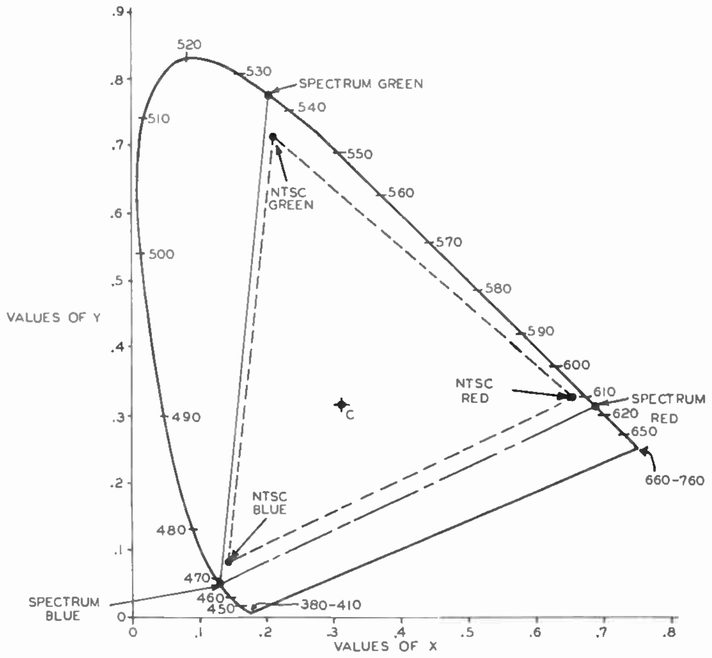

FIGURE 15

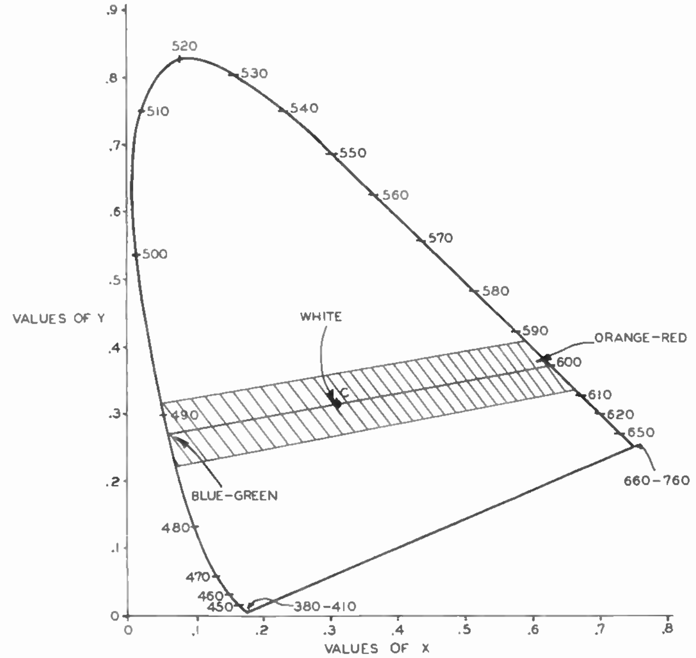

FIGURE 16

DeVRY Technical Institute

Formerly DeFOREST'S TRAINING, INC.

4141 WEST BELMONT AVENUE CHICAGO 41, ILLINOIS

QUESTIONS

3

How many advance Lessons have you now on hand?........................

Print or use Rubber Stamp.

Name.. Student No....................................

Street..Zone.......................... Grade...............................

City...State................................ Instructor.......... ....

Write your answers on the "Ans." line below each question. If more space is needed use reverse side of this page.

1. **What is light?**

   Ans...

2. **When all radiant energy with wavelengths between 380 mμ and 760 mμ is presented in nearly equal quantities to the eyes, what is the resultant color?**

   Ans...

3. **With a red, green, and blue of the same luminance, which appears brighter?**

   Ans...

4. **What determines the color of an object?**

   Ans...

5. **What subtractive primaries permit the widest range of color reproduction?**

   Ans...

6. **What additive primaries permit the widest range of color reproduction?**

   Ans...

7. **What is the sensation called which determines whether a color appears vivid or pale?**

   Ans...

8. **In describing color, to what does the term chromaticity refer?**

   Ans...

9. **What is a diagram called which represents a group of chromaticities?**

   Ans...

10. **Using Figure 16, which two colors are required to match the color of a very small patch?**

    Ans...

FROM OUR *Director's* NOTEBOOK

KEEP IT FRIENDLY

Greeting your customers with a smile and a cheery greeting often helps set the stage for future business. It's human nature to be friendly and people like to trade where they are treated as a welcomed friend rather than as another interruption.

Remember that your customer usually is in your shop because he's having trouble with a TV or radio set, and this doesn't put him in a very cheerful frame of mind. Listen to his trouble in a friendly and interested manner. You can make him feel better about the trouble even though you haven't had the opportunity yet to correct it. Then, knowing the details of the difficulty, you can discuss it intelligently and, if it is in your field, assure him of your ability to correct it.

Putting your customer in a cheerful frame of mind can be a most important public relations effort—one designed to keep him coming back.

Yours for success,

W. C. DeVry

DIRECTOR

PRINTED IN U.S.A.

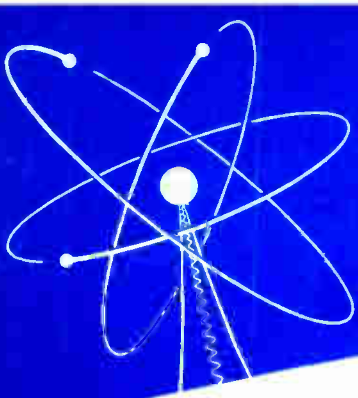

COLOR TELEVISION SIGNALS

Lesson COL-2B

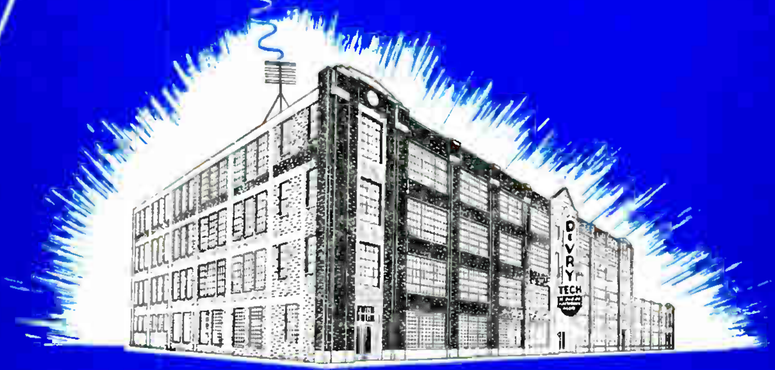

DeVRY Technical Institute
4141 W. Belmont Ave., Chicago 41, Illinois
Formerly DeFOREST'S TRAINING, INC

COL-2B

COLOR TELEVISION
SIGNALS

ELECTRONICS TELEVISION DTI

DeVRY Technical Institute

4141 Belmont Ave.
Chicago 41, Illinois

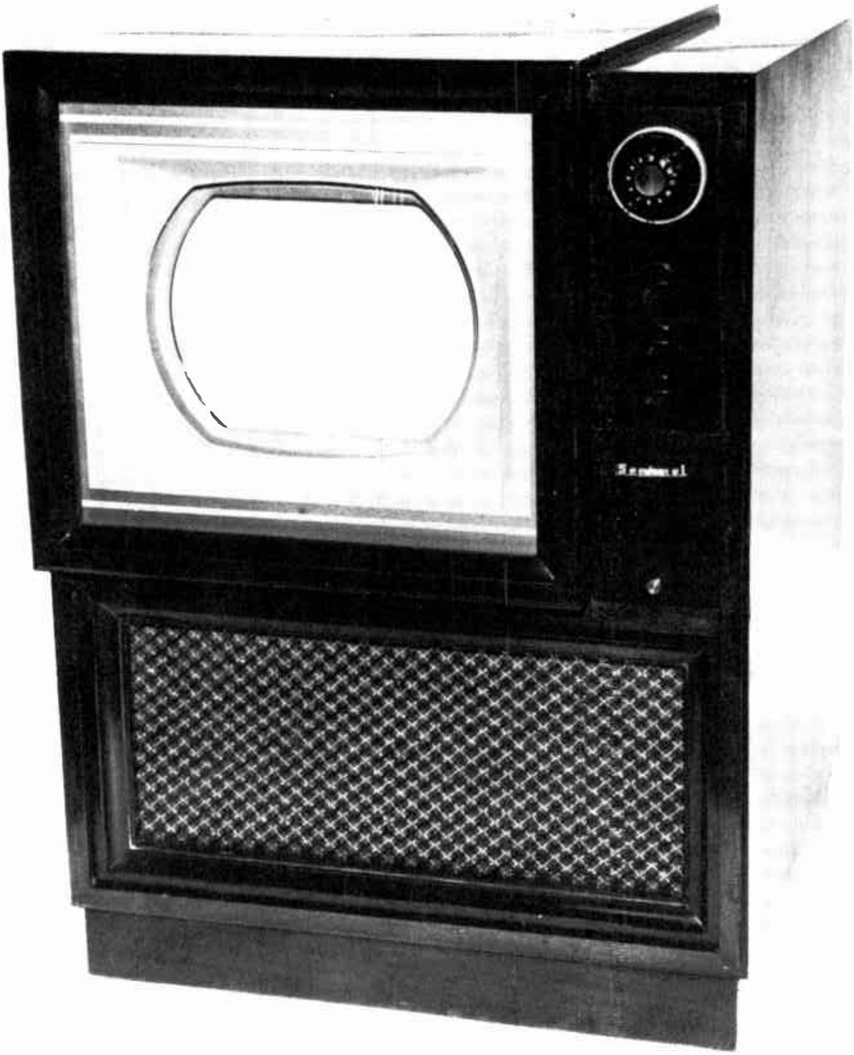

Color television receivers are operated as easily as black and white television sets. Controls added on the front panel adjust the intensity (saturation) of colors and color tones (hue) to appear most appealing to the viewer. Various servicing adjustments are located on the top of the television chassis and across the rear panel.

Courtesy Sentinel Radio Corporation

COLOR TELEVISION SIGNALS

Contents

You must have long-range goals to keep you from being frustrated by short-range failures.

COLOR TELEVISION SIGNALS

No other specialized branch of electronics has demonstrated such an amazing development as television in the United States. In less than eight years since the beginning of the post war production, more than 25 million television receivers have been built for homes everywhere—more than 3 million television sets each year!

Perhaps no other manufactured product has received such unanimous acceptance wherever it has been introduced, television has become part of the nation's home because it has proven itself to be everything everyone expected. Now it offers still greater enjoyment for everyone.

Through television, we have been able to enjoy and appreciate many important events. Interest is stimulated as a vast audience, which extends in every direction across the nation, can see and hear important public affairs at the moment activity takes place. Each participant becomes a face as well as a voice and these individuals soon grow familiar to more people.

Formerly, our newspapers and magazines brought into the home a mute and graphic representation of leading persons. Motion pictures provided the only alternative for an in-person appearance.

Through the television medium, these individuals come into homes everywhere and with a natural ease and warmth that is not duplicated in radio, press, or motion pictures.

Television is always growing! UHF channels have fulfilled the possibility of television for population centers between principal large cities. Every day new stations go "on the air' with television for another community and a new demand develops for television receivers and for competent individuals to maintain the performance of these sets.

COLOR IN TELEVISION

While all this phenomenal growth and advancement continued, electronics and communications engineers, research physicists and chemists and a whole wide field of designers and technicians throughout the country cooperated to develop television in full, natural colors!

At first, a number of methods were evolved and each system displayed various shortcomings. None of these systems were compatible for black and white television sets. There is a vast number of receivers in use everywhere, but these systems had no ready provision whereby black and white reproductions could be seen.

Considerable modification would be required in these cases in order for present television receivers to be used with these systems.

Equally important was the fact that none of these early systems were capable of producing a color picture with comparable sharpness and detail as the present black and white receiver and still remain within the 6 mc standard channels established for monochrome transmissions.

All early color television systems offered these objectionable features as well as desirable achievements. However, valuable research data had been collected while developmental work was carried out on these color systems. Research representatives from all parts of the country met together and formed panels or study groups under the auspices of the National Television System Committee.

Among the objectives set up by this committee, the following were deemed very important:

(1) Complete compatibility between present black and white receivers and the proposed color television system.

(2) The new color system must keep within the standard 6 mc channel already established for TV broadcasts.

(3) The sharpness and details in the adopted system should be comparable to the existing black and white reproductions.

(4) The cost of the receiver must be within reach of the average pocketbook.

Each committee panel was assigned a specific problem. Some of the concepts soon developed by these panels and adopted by the committee are summed up under the following topics.

Two Signals

To assure compatibility between the black and white and color systems, two signals should be used. One signal, which is called the "Y", brightness, or **luminance signal,** should be as nearly like the present monochrome signal as possible and is to be used by both monochrome and color receivers. The second signal, which is called the "C" or **chrominance signal,** should contain all of the added color information needed for the color receiver.

Frequency Interlace

In order to have complete compatibility, not only must one of the signals be like the monochrome transmission, but the black and white receiver must not be affected visibly by the chrominance signal. Obviously, since the black and white signal is over five megacycles wide, it would be impossible for the two signals to be inserted side by side in a 6 mc channel, let alone to attain signal separation in a conventional monochrome receiver.

Fortunately, the black and white signal does not occupy a solid spectrum of 5.25 mc. In fact, the video energy occurs in energy packets at multiples of the horizontal sweep frequency each side of the video carrier.

The reason for this can be found in Figure 1A. As the scanning progresses from top to bottom every vertical line like A is crossed at the line frequency as scanning progresses through lines 101, 102, 103, etc. Diagonal lines like B are crossed slightly sooner on each scanning line and lines like C are scanned slightly later.

Therefore, all video pulses produced by these picture lines occur at or very near the line frequency and its harmonics as shown in Figure 1B. This leaves space between these sidebands into which added information can be inserted without affecting the picture. Such a process is called FREQUENCY INTERLACE and, as shown in Figure 1C, the color sidebands are placed midway between the black and white sidebands.

What is more important when considering compatibility, these interlaced sidebands do not have a visible effect on the monochrome receiver. Why this occurs can be seen by considering Figure 1D where A represents the scanning line frequency and B a frequency which is an odd harmonic (11th) of one half the line frequency A. Notice that as the line starts at (1) the odd harmonic swings into a positive alternation but at the beginning of the next line at (2) it swings in the negative direction. This reversal occurs with each line so that for all odd numbered lines the harmonic starts with a positive alternation and for all even numbered lines it is negative.

Notice that as one horizontal line starts at point (1), the odd harmonic begins on the positive alternation and ends at (2) on a positive alternation. As a result, the second horizontal line begins and ends with a negative alternation as indicated by the dotted line "C". Thus, in the first field all the odd numbered lines begin and end with a positive alternation while all the even numbered lines begin and end with a negative alternation. All together 525 lines are scanned in the first frame. Thus, the 525th line is an odd numbered line ending on a positive alternation.

Therefore, the 526th line which is the 1st line of the second frame has just the opposite phase as the first line of the first frame. This is shown by the dotted curve "C".

Due to the eye's persistence of vision, these rapid reversals tend to cancel out, making these odd harmonics practically invisible. Hence, by having the chroma signal modulate a carrier which is the 455th (odd) harmonic of the half line frequency, this chroma signal has little effect on the monochrome receiver and thus assures compatibility.

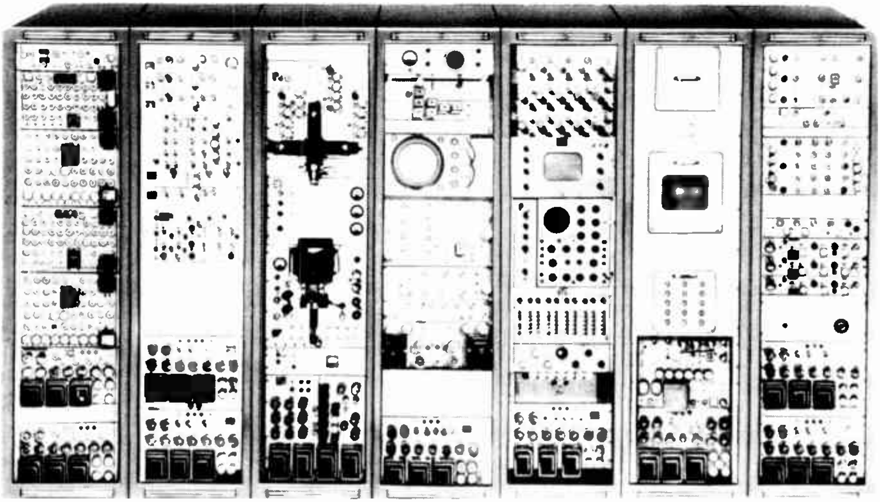

Entire color television facilities are included in this rack-mounted unit. It furnishes color bar test signals and performs the operations of the colorplexer preparing color video information for the modulator in the transmitter rack on the right end. A vector scope, in the center rack, checks the phase relationships between the modulating signal components.

Courtesy Telechrome Incorporated

Surplus Signals

A basic rule to follow in the transmission of any signal is that if the senses cannot detect certain information, don't transmit it. This added information adds nothing and it can interfere with an essential signal. In color TV the luminance and chrominance signals were chosen to eliminate all surplus or REDUNDANT signals. Although very pleasing to the eye, the complete color TV signal is stripped of unnecessary signals in two ways.

The black and white receiver detects only the luminance signal. Therefore, in order to receive a good picture on the black and white receiver, the complete brightness information must be sent in the luminance signal. However, any appearance of brightness in the chroma signal is unnecessary because the color receiver detects both signals. Therefore, the brightness signal is subtracted from the color signal for the chroma signal. Consequently, the chroma signal is frequently referred to as a COLOR-MINUS-BRIGHTNESS signal.

In fact, terms like "blue-minus-brightness", "red-minus-brightness", or "green-minus-brightness" are used to designate specific chroma signals. For instance, the blue-minus-brightness is the chroma signal when a pure blue picture element is being transmitted.

These color difference signals are designated as $E_R - E_Y$ for red-minus-brightness; $E_G - E_Y$ for green-minus-brightness, and $E_B - E_Y$ for blue-minus-brightness.

A second way to avoid redundance is not to transmit chroma signals which do not contribute to the picture quality. As we pointed out in a previous lesson on color, the eye does not see full color for small picture details. For tiny areas the color appears to be some brightness of a blue-green or an orange-red. In fact, for real small details no color is apparent and only brightness is seen by the viewer.

Considerable research along these lines showed that the eye sees when viewing an average size picture tube from a normal distance, all the colors for TV picture areas generated by signals below .5 mc, two colors for .5 mc to about 1.3 mc, and black and white details above 1.3 mc. Therefore, it is pointless to transmit chroma signals at frequencies higher than 1.3 mc.

Hue and Saturation

In the lesson on color, we pointed out that color has three distinct characteristics: brightness, hue, and saturation. Since the luminance signal carries only the brightness information, the chroma signal must carry two independent bits of information —hue and saturation.

The easiest way to transmit this information is to use two different types of modulation. Therefore, the committee soon decided that the AMPLITUDE of the chroma signal would represent the saturation and the PHASE DISPLACEMENT of the chroma signal from some reference signal would determine the hue.

However, since direct phase modulation of the chroma subcarrier creates engineering problems, an alternative method was adopted where two subcarriers, of the same frequency but 90° out of phase, are modulated by two color-minus-brightness signals in balanced modulators. With suppressed carriers the resulting sidebands develop a chroma signal by vector addition which shifts in phase with change in hue.

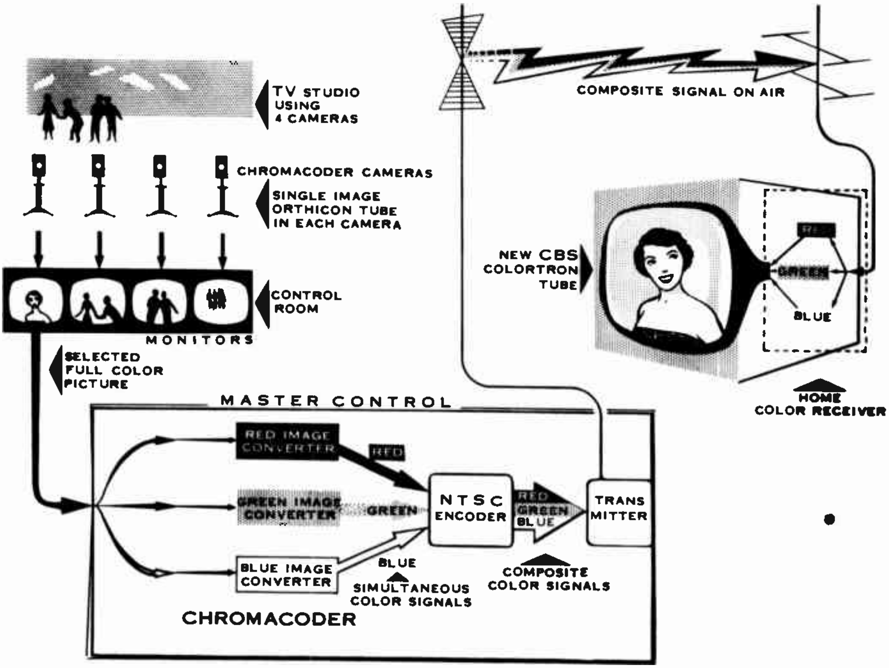

Color television camera using a single image orthicon conveys sequential red, green, and blue images through the control room to the Master Control where these images are converted into compatible NTSC broadcast color television.

Courtesy Columbia Broadcasting System, Inc.

These two sets of sidebands are called the ORTHOGONAL COMPONENTS of the chroma signal. To distinguish between the two, one is called the "I" signal and the other the "Q" signal.

How this phase shift occurs may be seen by considering the vector diagrams in Figure 2. Where the I and Q signals are equal in amplitude, like Figures 2A and 2B, the resulting chroma vector C forms a 45° angle with Q. Therefore, since C differs only in amplitude, these two signals represent different saturations of the same hue. On the other hand the resulting chroma signal vector C of Figure 2C has the same amplitude as Figure 2B but has a different phase angle θ. Therefore Figures 2B and 2C have a different hue.

Finally, Figures 2A and 2C differ both in phase and amplitude and represent chroma signals of different hues and saturation. Consequently, by careful choice of I and Q signals, a chroma signal of any desired amplitude or phase displacement can be produced. The details of how this signal is detected at the receiver are described later.

COLOR BROADCASTING

For two years, from early 1951 to mid-1953, intensified, jointly coordinated research was carried on. New developments were contributed in remarkably rapid sequence. Success followed after success due to the cooperation and team work between all the participants in this program. It was only natural, then, that, by July of 1953, the NTSC arrived at the point where it was capable of making formal request for approval of and permission for commercial use of color television broadcasting based upon developed specifications which correspond in every respect with the limitations prescribed by the FCC. This request was adopted on December 17, 1953.

Compatibility

The NTSC color television is the culmination of the combined effort of the entire radio, electronic, and television industry. The specifications of the NTSC color television are wholly compatible with all black and white television broadcast receivers in use anywhere in the United States. Any program which is televised in full, natural color is broadcast in the conventional way typical for telecasting black and white.

Television receivers built for NTSC color reproduce the scene in beautiful life-like colors. Black and white receivers receiving this same NTSC color television signal reproduce the scene in clear, distinct monochrome (black and white). Hence, the same signal works equally well in either kind of television set, color or black and white.

Perhaps it should be emphasized that no adapters, converters, or modifications of any sort are necessary in order for black and white sets to receive color telecasts. These receivers will not reproduce a picture in colors, of course, but on the other hand, millions of television set owners will go right on and enjoy every popular program in the same way they enjoyed it in the past, although it may be televised in color from now on!

Compatibility does not end with the black and white television receivers. Television sets made for the NTSC color television signal reproduce a black and white picture with a conventional monochrome television signal.

Channel Width

Every part of the signal is kept within the same 6 megacycle television channel which was originally allocated for black and white telecasting. This became necessary at once when additional television channels in the UHF region were granted to assure future expansion of television service for every part of our nation. Nowhere in the authorized spectrum for commercial television broadcasting does sufficient space exist to allow a number of television channels wider than 6 mc!

Color Subcarrier

By frequency interlace color information is arranged to occupy space that exists between and separates small groups of monochrome video information. Therefore, a greater use is made of the 4.5 megacycle bandwidth between the picture and sound carriers in a television channel.

The color information is contained in subcarrier sidebands of the I and Q signals which occur at odd harmonics of one-half the television picture line frequency. These sidebands extend above and below the **color subcarrier** which is 3.579545 megacycles or, the 455th harmonic of one half the television picture line frequency; 15,734.264 cycles per second. Filters block all color information sidebands which would appear outside of the authorized 6 megacycle television channel.

The color subcarrier sidebands contain the color information which most nearly corresponds to the televised scene in terms of standard red, green, and blue primaries. The choice of these colors was determined entirely on the basis of mixtures which would match the widest selection of natural colors and tones. These primary colors are termed as additive primaries since sources of light for each of these colors are mixed in the correct amount to produce the desired color.

The video information which makes up the monochrome signal is composed of selected quantities of the red, green, and blue. The mixtures of these primary colors are selected to give natural picture reproduction on black and white receivers, since this monochrome video signal along with retrace blanking and the familiar horizontal and vertical synchronizing pulses, makes up a complete set of information for black and white television receivers.

A color subcarrier reference burst of nine cycles of 3.579545 megacycles is set on the blanking pedestal after every horizontal sync pulse; it is omitted during vertical retrace. Color television receivers require this reference signal, but since it occurs during blanking time, is not visible on either black and white or color television receiver screens.

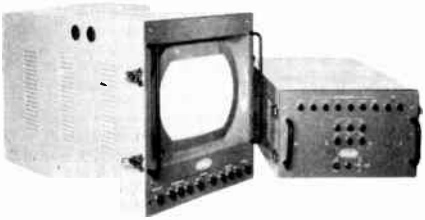

This color television monitoring equipment performs the same operations as a color receiver. The I and Q signals are demodulated and mixed with the Y signal to produce a picture in color on the 15-inch tricolor picture tube.
Courtesy Polorad Electronics Corp.

Extensive field tests have been conducted in all aspects of the NTSC specifications to ensure full compatibility between black and white television and color television. From these tests, the frequency of the color subcarrier was determined and a nine-cycle color subcarrier reference burst was added.

Also, to minimize interference from the 4.5 mc intercarrier signal, the horizontal sweep frequency is changed slightly from the familiar 15,750 cycles per second to 15,734.264 cycles per second. This change requires a slight change in the vertical sweep frequency to about 59.94 cycles per second. Black and white television receivers have no difficulty adjusting automatically to these new frequencies since the difference is less than 2 percent.

CAMERA CHAIN

A complete camera chain is shown as part of the transmitting station equipment in Figure 4A.

Figure 4B is a camera system designed by another manufacturer and using a slightly different approach. It is called a chromacoder, and when used, replaces the portion of Figure 4A enclosed in the heavy dashed lines on the right.

Possibly the best way to become acquainted with the NTSC Color System is to trace the signal step by step through typical transmitting and receiving equipment.

The camera in Figure 4A consists of an appropriate optical system which will divide a televised scene into separate images in terms of red, green, and blue colors. One type of camera employs a separate image orthicon for each color. Horizontal and vertical deflection circuits and a high voltage power supply are required for the image orthicons. An electronic view finder furnishes a black and white reproduction of the televised scene.

The camera control amplifier may be operated from a remote control console equipped with a master monitor. The camera signal shading correction, synchronizing pulses, camera blanking, and gain also are supplied from the control amplifier.

Optical System

The optical system in Figure 4A includes various objective lenses mounted on a rotating turret as shown in Figure 3, which can be changed quickly by the camera operator. A typical lens turret includes separate objective lenses for closeup views, middle distance scenes, and special wide-range and telescopic lenses.

Optical focus is adjusted by an operator's control handle. This control moves the turret and the position of the objective lens with respect to the condenser lens which remains stationary.

A relaying lens is used after the condenser lens. It increases the useful working distance in order to provide room for light-splitting dichroic mirrors, various astigmatism correcting glasses, and color trimming and neutral density filters.

An iris diaphragm is usually situated between the elements of the relaying lens. This is a variable aperture (opening) for correctly adjusting the amount of incoming light to the photocathode plates in the image orthicons. A selsyn motor in the camera is used to change the aperture size in the iris diaphragm. This selsyn is controlled from the video operator's console in front of the monitor.

The dichroic mirrors divide the televised scene into red, green and blue images. How this is done is shown in Figure 3. Light in colors of the televised scene arrives at the "blue" dichroic mirror. Here, blue colored light is reflected because the glass is specially made to reflect blue light and to pass all other colors. Thus, the blue color of the scene is reflected towards the "blue" image orthicon.

The remaining light passes through the "blue" dichroic mirror and arrives at the "red" dichroic mirror. Here, the red colored light is reflected toward the "red" image orthicon and the remaining green colored light passes through to the "green" image orthicon. Special red, green, and blue filters supplement the selectivity of the dichroic mirrors. These filters insure correct color rendering by absorbing all undesired colors and passing only those colors which furnish the desired results. These filters also correct for color characteristics and sensitivity differences which image orthicons display for different colors.

Two ground glass plates between the condenser lenses and the relaying lenses correct any astigmatism caused by the dichroic mirrors as light passes through them. The horizontal astigmatism corrector for the "blue" image orthicon adjusts conditions in order that red, green and blue light passes through the same total thickness of glass.

Neutral-density filters correct the relative sensitivity of each image orthicon so that transfer characteristics are more similar for each color. Filters are used with the "red" and "green" image orthicon. The "blue" image orthicon is favored to correct for artificially lighted scenes which usually exceed in yellow and red light.

Camera Controls

The camera operator has several useful controls available to him at the rear of the camera. Optical focus is adjusted by turning one of the camera control handles. These handles are used also to control tilting and "panning" movements as each scene requires.

The handle in the middle of the camera control panel is fastened by a long shaft to the rotating lens turret to permit ready change of lenses for different views.

Separate height and width controls are provided for each image orthicon in the camera. The potential on the decelerator grid controls beam "splatter" and is individually adjustable. All these controls are included to provide proper registration of the red, green and blue pictures as each appears on the camera viewfinder.

Phone jacks also enable the camera operator to communicate with the video operator and the programming directors for technical supervision.

Viewfinder

An electronic viewfinder is mounted on the top of the color television camera. A black and white reproduction is obtainable of the "red" or "green" video superimposed on "blue" video, or all three video signals may be viewed simultaneously in order to align the objects of each picture and adjust each picture size to properly register with each other.

Aperture Compensation

Aperture compensation is inserted at the control amplifier to improve the picture detail by peaking and thus compensate for video amplifier phase shift, spot size in the image orthicons, and losses due to the use of coaxial cable from the camera. In this way, it is possible even to improve the resolution power of the lenses by changing the video frequency response of the electronic circuits of the camera.

The camera control amplifier is operated from the control console by the video operator. Here, brightness irregularities in the picture from each image orthicon are corrected by the shading generator output. Each video signal is amplified and blanking is set to proper reference level for insertion of synchronizing pulses.

Additional video high frequency peaking is used to compensate for losses due to long coaxial cable from the camera. Synchronizing pulses are brought into the control amplifier and also are amplified to operate the deflection circuits in the camera.

Gamma Correction

Unfortunately the receiver picture tube brightness is not directly proportional to the grid signal voltage. Doubling this grid voltage increases the brightness about four times. Although this is acceptable for monochrome reproduction, it must be corrected in color transmission systems for satisfactory color reproduction. The process of inserting an amplifier in the circuit with non-linear characteristics, which are equal and opposite to the picture tube and other circuit components which cause non-linear performance, is called **gamma correction.**

Without gamma correction added to the video signal voltages, flesh tones, for example, would vary in coloring all the way from a ruddy red-orange in a scene with subdued surrounding light to yellow-green in the midst of a very brightly lighted setting. Gamma correction ensures that correct flesh tones, and all other colors, appear most nearly natural no matter what prevailing light conditions may exist.

To correct this undesirable effect, the color video voltages are changed by an amount that is the reciprocal of this distortion which is $\frac{1}{2.2}$. In each case, the prime (′) is added to indicate the voltage represented is GAMMA CORRECTED. For example E_R' is $E_R^{\frac{1}{2.2}}$.

OPERATOR'S CONSOLE

The control console is a video operator's position for adjusting or switching many important video, deflection and synchronizing voltages and shading correction voltages.

The master monitor includes an ordinary 10″ black and white television receiver picture tube with a 5-inch oscilloscope to observe video and synchronizing pulse wave shapes, etc. Here, as at the viewfinder of the camera, separate video signals may be selected or compared, or all three signals may be superimposed.

The monitor and its oscilloscope are used in close conjunction with the video operator's control console in order to maintain the correct camera operation and output at the control amplifier. Although there will be program monitoring carried on at a number of other places in a studio, the master monitor must be readily accessible for use by the video operator.

THE CHROMACODER

In the chromacoder of Figure 4B, the same type of optical system is used as Figure 4A except that, instead of dichroic mirrors, a rotating wheel made up of red, blue, and green color filters divides the televised scene into successive or sequential red, blue and green colors. Thus, the scene colors are transmitted very rapidly one after the other, and not simultaneously as in the camera of Figure 4A. This camera, therefore, requires only one image orthicon tube since it scans the scene a number of times to pick up the primary colors. In fact, this camera uses 180 fields, 60 red, 60 green, and 60 blue, and 47,250 lines per second.

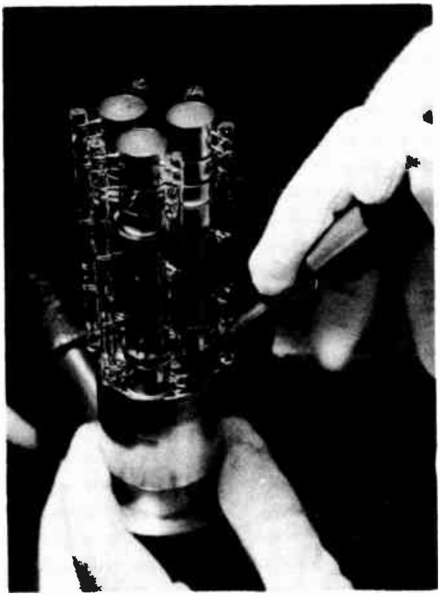

Three electron guns are built side by side in the tricolor picture tube. Red, green, or blue video information, obtained from the color matrix, is applied to each electron gun.

Courtesy General Electric Co.

When the color wheel rotates its red, blue, and green filters past the image orthicon (IO) tube, the appropriate color field is produced at each of the three CRT's, fed by the CRT sweep generator. This is accomplished by feeding the camera signal through an aperture compensator and CRT drive amplifier. The gate and blanking generator provided with pulses from the camera allows the red CRT to be on only when the red filter is in front of the camera tube, the blue CRT only for the blue filter, and the green CRT is on only for the green filter.

Now the trick for converting these sequential signals into the NTSC simultaneous signals is performed by the cathode potential stabilized emitron tube

(CPSE). Since the red CRT is on $\frac{1}{180}$ second and off for $\frac{1}{90}$ second the CPSE phosphor reads the signal on red CRT for $\frac{1}{180}$ second. In contrast to its short reading time, the electric output is not only long, but continuous. Even though the CPSE has stopped reading, it continues to have an output voltage. Thus, each CPSE is emitting voltage continuously and hence simultaneous colors appear at the input to the control amplifier. The local CPSE sweep generator conforms to the FCC standards and so the fields and sweep output from these tubes is standard.

To avoid an uneven picture due to the CPSE scanning hitting and missing the lines on the CRT at random, the camera scanning and the CRT's use vertical lines. Thus, the CPSE horizontal scanning crosses over the vertical lines on the CRT at regular intervals and an even picture results.

Monitor switching and monitor unit are mainly for initial set-up conditions of camera and system. Optically, the main differences in the chromacoder system occur in the camera and in the lens between each CRT and CPSE. No dichroic mirrors, neutral density filters, nor astigmatism corrector are used in the camera. Between each CRT and CPSE is just an enlarging lens.

Essentially the camera controls are the same except that there are no registration controls. These are located at the control console, thus freeing the cameraman to concentrate on other important features.

TRANSMITTER MATRIX

As the three color video signals appear at the output of the gamma corrector, these signals are not satisfactory for TV broadcast. All of this video information requires a lot more than the authorized 6 mc channel width. Furthermore, not one of these three signals is suitable for any of the more than 30 million black and white television receivers!

Therefore, further operations must be performed on the "red", the "green", and the "blue" video signal after gamma correction. The first step is to obtain a monochrome video signal which is necessary for black and white television sets. This monochrome signal is the luminance signal used in color television receivers as defined by the FCC.

In addition to the monochrome signal, the two color signals, I and Q, are derived from the color video signals.

All three signals are special mixtures of the gamma corrected color video signals E_R', E_G', and E_B'. The mixtures are specific percentages of each color voltage purposely selected to provide a monochrome signal and to conserve video channel space.

The gamma corrected color video signals are combined in a group of specially arranged amplifiers and dividers to produce three new signals at the output of the **color matrix.** These three signals are expressed as percentages of the original three color video signals.

Luminance Signal

The percentages selected in the color matrix to make up the luminance or "Y" signal closely approximate the intensity the human eye observes in these colors. The human eye is most sensitive to green, the sensitivity to red is lower, and the eye is least sensitive to blue. Thus, the percentages were selected to make up a monochrome signal which would appear most natural on a black and white television set and this signal contains all the required picture fine detail.

To make up the **luminance signal,** 30 percent of the gamma corrected "red" video signal is selected. This percentage holds no matter what value the "red" signal voltage may be for a given picture element. To this is added in the color matrix 59 percent of all the gamma corrected "green" video voltage for that picture element and 11 percent of the gamma corrected "blue" video voltage. It is more convenient to express the luminance signal, E_Y', in mathematical terms, such as:

$$E_Y' = 0.30\ E_R' + 0.59\ E_G' + 0.11\ E_B'. \quad (1)$$

When E_R', E_G', and E_B' are all equal to each other, E_Y' is the luminance of white light! When any difference exists between E_R', E_G', or E_B', then E_Y' is the luminance of some color. Finally, when

$$E_R' = E_G' = E_B' = 0$$

E_Y' also is equal to zero, and this particular picture element is black!

From this it is possible to see how to obtain a shade of gray between white and black by choosing the proper amounts of color video signals to make up the luminance or monochrome signal. The luminance signal is considered, in a sense, in terms of the separate intensities of the three primary colors, and the resulting shade of gray on a monochrome receiver represents the light intensity of the particular picture element regardless of its color.

I and Q Signals

Two chroma signals which consist of special quantities of gamma corrected red, green, and blue color video voltages also are obtained at the output of the color matrix. These combinations transmit only information dealing with hue and saturation and, as mentioned before, are frequently referred to as color-minus-brightness signals. Called I and Q, these two chroma signals are defined by the FCC as:

$$E_I' = 0.60\ E_R' - 0.28\ E_G' - 0.32\ E_B', \qquad (2)$$

$$E_Q' = 0.21\ E_R' - 0.52\ E_G' + 0.31\ E_B'. \qquad (3)$$

Since all functions in the color matrix deal with gamma corrected red, green, and blue video signal voltages, no matter what operations are performed on these color video voltages, the result may be expressed in terms of the three primary color video signals as shown in Equations 1, 2 and 3.

The I and Q signals are each amplified in conventional video amplifiers and then applied to special low pass filters.

Narrow Band Signal

The E_Q' color video signal consists of the color information for the large picture areas and for video detail resolution between zero and 500 kilocycles.

In terms of picture resolution, this frequency response is confined to large color surfaces and coarse detail. Hence, its low pass filter has the lowest cut off frequency, 0 to 0.5 mc and its great attenuation to higher video frequencies also adds the greatest delay to the E_Q' signal, 1.4 μsecs.

The E_I' color video signal contains color information for a greater range of colors, from an orange-red through white to a blue-green for large picture areas and video resolution up to 1.3 mc, the semi-fine detail.

Since the frequency attenuation is not so great for the E_I' video signal, a 1.2 μsecs delay line is added so the signal does not arrive at the subcarrier modulator ahead of the E_Q' video signal.

The frequency response of the luminance signal is not restricted in any way other than by the limited overall response of the video amplifiers for the E_Y' video signal. Therefore, it becomes necessary to add a full 1.4 μsec delay to the signal in order that it does not arrive ahead of the I and Q signal sidebands at the adder circuit.

SUBCARRIER MODULATORS

Balanced modulators in the I and Q channels provide an odd harmonic sideband information output in order to make greater use of the 6 mc wide television channel with frequency interlace. The color subcarrier frequency is chosen to be the 455th harmonic of one half the horizontal frequency. Thus, sidebands of this subcarrier occur at the odd harmonics of half the line frequency.

Q Signal

Using the Q video signal to modulate a 3.579545 mc color subcarrier produces a series of groups of sidebands which contain the Q video signal. The feature of a balanced modulator exists in the fact that the original carrier signal is suppressed at the output. Only the necessary groups of sidebands are produced.

I Signal

The I signal is handled in a manner which is only slightly different from the Q signal. The same subcarrier frequency is used. However, before the subcarrier is modulated with the I signal, it is phase-shifted 90 degrees ahead of the subcarrier modulated by the Q signal. Thus, the I signal video sidebands occur 90 degrees ahead of the Q signal sidebands and, together, both share the space between the Y signal sidebands.

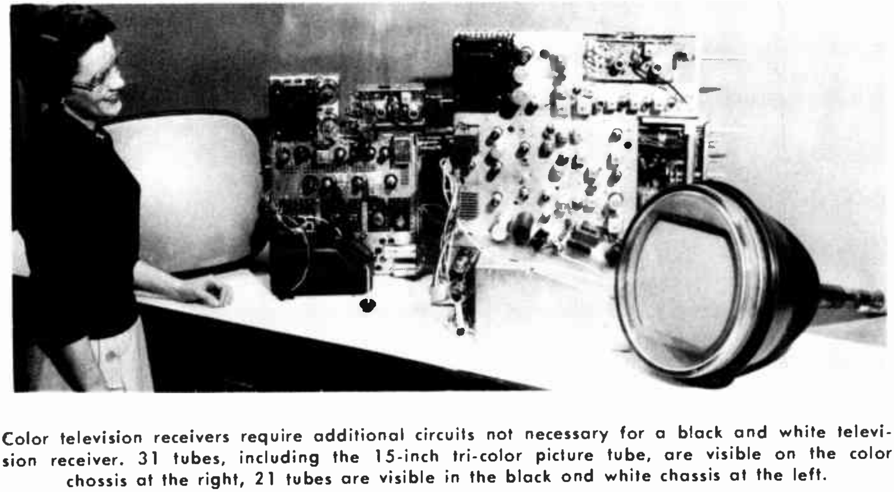

Color television receivers require additional circuits not necessary for a black and white television receiver. 31 tubes, including the 15-inch tri-color picture tube, are visible on the color chassis at the right, 21 tubes are visible in the black and white chassis at the left.

Courtesy General Electric Co.

This must be a 90° phase shift, or an objectionable form of cross-modulation or interference develops between the Q signal sidebands and the I signal sidebands. Again, the phase-shifted subcarrier does not appear at the output of the balanced modulators.

D-C Restorers

Separate d-c restorers precede the input to the I and Q balanced modulators. Before modulation is applied to the separate subcarrier signals, the correct d-c reference level must be restored to the I and Q video signals. Just like monochrome television, conventional capacitive coupling between amplifier stages removes any d-c video reference which existed in the original color video signal at the output of the image orthicons in the camera. Therefore, some convenient means is used to restore this original d-c reference to the I and Q video signals before modulation takes place.

BAND PASS FILTERS

Band-pass filters are placed in the output of the balanced modulators. These filters remove the groups of sidebands higher than 4.2 megacycles generated during modulation. These sidebands must not extend beyond the authorized 4.5 megacycles between the television picture carrier signal and the sound carrier signal.

The wide band pass filter removes sidebands which extend below 2 megacycles. This filter has an overall bandpass of 2.2 megacycles. Within this band, there are I signal video sidebands above and below the 3.579545 megacycle subcarrier.

This means that sidebands extend below the subcarrier, but not more than 1.6 megacycles below. Sidebands also extend above the subcarrier, but not more than 0.6 megacycles. These are VESTIGIAL sidebands, that is, of the sidebands which extend above the subcarrier frequency, only a part of these are retained. Sidebands higher than 0.6 megacycle above the subcarrier frequency would extend beyond the authorized channel, and, for this reason, must be filtered out.

The narrowband filter keeps the Q signal within the passband from 3 mc to 4.2 mc. Thus, the Q signal sidebands cannot extend more than 0.6 mc above or below the subcarrier frequency.

After modulation the I and Q signals are contained in two groups of side bands. When combined, these sidebands form the chrominance signal E_C'. Due to the fact that these sideband groups are 90° apart the resultant E_C' is both phase and amplitude modulated, and due to the manner in which the E_I' and E_Q' voltages were developed in the matrix, the amplitude of the E_C' represents the color saturation and the phase represents the hue.

THE CHROMINANCE SIGNAL

The I and Q signal modulation sidebands are the orthogonal components which make up the chrominance signal sidebands, E_C'. Finally the chrominance signal sidebands together with the luminance signal, E_Y', combine to make up the composite modulating signal, E_M. The mathematical expression which describes the amplitude of the modulating signal is given by FCC as:

$$E_M = E_Y' + E_C' \qquad (4)$$

where:

$$E_C' = E_Q' \sin(\omega t + 33°) + E_I' \cos(\omega t + 33°); \qquad (5)$$

$$E_I' = 0.60\ E_R' - 0.28\ E_G' - 0.32\ E_B'; \qquad (2)$$

$$E_Q' = 0.21\ E_R' - 0.52\ E_G' + 0.31\ E_B'. \qquad (3)$$

You may notice in these equations that both the I and Q signals have a 33° phase shift. This added shift was included in the standards to make it possible to design a "narrow band" receiver which reproduces the color broadcast in less detail but at a lower receiver cost. At the same time it doesn't add an appreciable cost to the standard "wide band" receivers.

The term "sin(ωt + 33°)" in Equation (5) indicates a 33° phase shift of the E_Q' signal with respect to the phase reference, sin ωt, as shown in the vector diagram in Figure 5A. In the same sense, "cos(ωt + 33°)" indicates a 123 degree phase shift of the E_I' signal, which is therefore 90° ahead of E_Q'. The I and Q signal carriers are phase shifted 33° before they're modulated. Thus, the color subcarrier for the Q signal sidebands is called "sin (ωt + 33°)" and the color subcarrier for the I signal sidebands is called "cos (ωt + 33°)".

The chrominance signal E_C', is best shown in how it contains color sideband information in Figure 5 by the use of vector diagrams. Each case describes the relative position of the chrominance signal vector for picture elements of given hue and the resultant length of the vector E_C' is determined by the saturation of the color to be transmitted.

White

White objects in a color television picture develop E_R', E_G', and E_B' color video voltages of equal amplitude as shown in column 2 of Chart 1. This is a special case where E_Y' indicates the luminance for white. Therefore, when white is to be transmitted, E_I' and E_Q', equal zero. No chrominance sidebands are sent and E_Y', the luminance signal, is all that is transmitted!

E_I' and E_Q' become zero again where black is transmitted, since E_R', E_G', and E_B' must equal zero; E_Y' also is zero for black.

Red

When the color of a given picture element is "pure" red; there is no green or blue in it. Therefore, in Figure 5A let us place this information in Equations (2) and (3) for E_I', and E_Q'. For convenience, the value for E_R' in each equation shall be assumed as 1. Then, the total E_Q' signal is equal to 0.21 E_R', or 0.21, and the total E_I' signal equals 0.60, since E_G' and E_B' equal zero in each equation and cannot add any signal to E_Q' or E_I'.

Adding these values for E_Q' and E_I', the amplitude of E_C' is determined by vectors to be 0.636, and its position with respect to the phase reference, sin ωt, is fixed when E_Q' is drawn, to its proper amplitude of 0.21, 33° ahead of sin ωt and E_I' is drawn to its amplitude of 0.60, 123° ahead of "sin ωt".

Yellow

The vectors in Figure 5B show the signal for transmitting yellow. Here assume E_G', E_R' each equal 1 while E_B' is zero. (To obtain yellow, equal amounts of red and green light are mixed). Now the result for E_I' is 0.32 and E_Q' is negative, or -0.31. The resultant amplitude of E_C' is 0.446. The vector to represent E_I' is drawn in the same position it was in for the "red" chrominance signal. However, the E_Q' vector is drawn in the opposite direction because it is a negative signal for yellow. E_Q' must be drawn 213° ahead of "sin ωt". The addition of E_Q' and E_I' now places E_C' in its new position for yellow.

Orange

For orange, where E_R' is 2, E_G' is 1, and E_B' is zero, the chrominance vector, E_C', lies between the "red" position and the "yellow" position. In fact, it coincides with E_I' in Figure 5C because E_Q' is zero.

By choosing values for E_R', E_G', or E_B', it is possible to transmit a whole range of colors with the chrominance signal, E_C'. The point to keep in mind is, that while the chrominance signal occurs at widely varying positions depending upon the color to be transmitted, E_I' and E_Q' remain in the same relative vector phase and only change in amplitude or become negative, as each color may require.

The vector diagram of Figure 5H illustrates the various positions of the chrominance vector for different colors which can be transmitted for a given picture element. It shows the range of colors that may be transmitted and reproduced by the use of I and Q signal sidebands.

The color table in Figure 6 lists the various conditions which exist when different colors are transmitted. The values in this table correspond directly with the vectors used in Figure 5.

COLOR SYNCHRONIZATION

Although color television compares favorably in every respect necessary to be compatible with black and white television, additional color synchronizing information is necessary. In order that the chrominance sidebands, E_I' and E_Q' can be demodulated in the color television receiver, the receiver must generate a color subcarrier which is of correct frequency and phase.

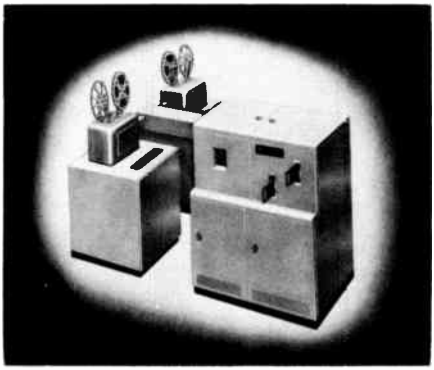

Color motion pictures and slides may be televised in color by means of this scanning equipment. It is designed to provide red, green, and blue color video signals required for NTSC color television broadcasting.

Courtesy Allen B. DuMont Laboratories, Inc.

Since this subcarrier must be identical with the color subcarrier used for developing the I and Q signal sidebands, it is necessary to include a sample of the color subcarrier used in the colorplexer to be used as a frequency and phase reference for the subcarrier oscillator in the color receiver.

So that this reference signal does not interfere with the monochrome signal that must be furnished for black and white receivers as well as color sets, nine cycles of the 3.579545 mc are located on the blanking pedestal after the horizontal retrace time and the beam current in the picture tube is cut off during the interval.

Since the color subcarrier frequency is an odd harmonic of half the line frequency, color sidebands are so related that they occur at harmonics of the half-line frequency. In other words, were the choice of the subcarrier other than an odd harmonic, these color sidebands would be visible in the form of a maze of dots glittering all over the screen.

The choice of an odd harmonic makes it possible for the black and white receiver to eliminate this chrominance signal so it will not be an interference. Because these sidebands are at odd harmonics, each time a given line is scanned, these sidebands are phase inverted 180° as described for Figure 1D. This simply means then, that each time the line is scanned, the chroma sideband information will cancel the same information on that same line in the previous field. Persistence of the phosphor coating in the tube and persistence of vision along with the high range of frequencies (never below 2 mc) all tend to eliminate the visual effects of this chroma signal.

Burst

The **reference burst** in Figure 5A is obtained directly from the color subcarrier. The reference burst is defined by the FCC as $-\sin \omega t$. It is 180° out of phase with respect to the **phase reference,** $\sin \omega t$. The subcarrier is applied to a burst gate which is keyed by a burst pulse generator. Horizontal and vertical synchronizing pulses are applied to the pulse generator and, in this way, a keying burst pulse is developed which determines the proper interval for the reference burst.

The reference burst is initiated by the pulse generator and, after 9 cycles of the subcarrier have been sent, the burst is once again cut off until after another horizontal synchronizing pulse. This keying is repeated after every horizontal pulse until one complete field of lines is scanned. Then a special keying-out signal is supplied from the vertical synchronizing pulse amplifier which prevents the burst from being sent on the serrated vertical synchronizing pulses.

Sync Pulses

To assure good frequency interlace, the vertical and horizontal synchronizing pulses are derived from the color subcarrier generator by means of frequency dividers which "count down" the 3.579545 mc signal.

Briefly, a "divide-by five" oscillator reduces the subcarrier frequency to 715,909 cycles. This signal is applied to a "divide-by-seven" oscillator to produce 102,272.714 cycles. The frequency is then raised by a "times 4" multiplier to approximately 409,090.856 cycles. This frequency passes to a "divide-by-thirteen" oscillator to furnish approximately 31,468.528 cycles, to determine the frequency of standard equalizing pulses and serrated vertical synchronizing pulses. A "divide-by-two" oscillator brings the frequency down, then, to 15,734.264, the horizontal synchronizing pulse frequency.

Another series of frequency dividers reduces the 31,468.528 signal by factors of seven, five, five, and then three to furnish the 59.94 cycle vertical synchronizing frequency.

Adders

The sidebands of the I and Q signal modulated subcarriers are combined with each other to form the chrominance component of the color television signal. This is done by means of I and Q signal adder circuits. The chrominance signal is combined with the monochrome signal which also contains the horizontal and vertical synchronizing pulses. The reference burst is added here also.

The composite output of the adders is amplified and, after restoration of the correct d-c reference, the color television video signal is ready to be applied to the modulator in the television transmitter.

THE COMPOSITE SIGNAL

A brief description of the composite color television modulating signal also will explain some necessary phase shift relationships which must be maintained. The **composite modulating signal** is conveniently expressed mathematically by the FCC as:

$$E_M = E_Y' + \left[E_Q' \sin(\omega t + 33°) + E_I' \cos(\omega t + 33°) \right] \qquad (6)$$

E_M is the composite video signal for a particular picture element as it is applied to the modulator of the television transmitter. E_Y' is, of course, the gamma-corrected monochrome portion of the color video signal for the given picture element.

E_Q' and E_I' are amplitudes of the two orthogonal components of the chrominance signal for the given picture element.

It is interesting to note here that, upon examining Equation (6) when color video information above 500 kc is sent, the chrominance signal consists entirely of E_I'; the E_Q' signal drops out of the equation since it is limited to video information only up to 500 kc.

Below 500 kc, this same equation can be expressed in terms of two primary color-minus-brightness components, that is,

$$E_M = E_Y' \frac{1}{1.14} \left(\frac{1}{1.78} (E_B' - E_Y') \sin \omega t + (E_R' - E_Y') \cos \omega t \right) \qquad (7)$$

The expression "sin ωt" in this last equation indicates that the $(E_B' - E_Y')$ component of the chrominance signal E_C' is in phase with the color reference "sin ωt". The notation "cos ωt" indicates that the $(E_R' - E_Y')$ component of E_C' is phase shifted by 90°.

Since Equations 6 and 7 both apply so long as the chrominance signal is below 500 kc, it is possible to build an economical receiver based on this equation which receives only the chrominance signal below 500 kc. How this narrow band receiver works is described later in the lesson.

THE COLOR RECEIVER

Emphasis on color television signal standards and a thorough familiarity of how the three primary colors are treated before being transmitted helps in describing the logical sequence the same signal is treated and restored in the color television receiver. The receiver is shown in block diagram form in Figure 7.

The object of the entire transmission system is to convert color into voltages which can be easily transmitted and received. Furthermore, the make-up of E_M determines how the receiver must behave for the most part to reconvert voltages to the original colors. In fact, a color TV receiver may be described as a transmitter in reverse. Starting with the composite signal the receiver breaks it up into the same signals developed by the camera and matrix in the transmitter.

Antenna and Tuner

The same antenna and tuner which are used for conventional black and white television sets may be used for receiving color television programs. Color television is entirely compatible for regular VHF or new UHF television broadcasting channels.

Existing television antennas that have furnished satisfactory incoming signal and reception to television receivers in the past perform equally well for receiving color television signals.

No special changes for color reception should be required except where prevailing local conditions demand special attention and this would, in all probability, be required in such cases for black and white reception also. For the record, it is emphasized that reception of color television signals compares, in every respect, with the same ease and the same problems which are so familiar for black and white television receivers and antenna installation.

Video and Sound I-F's

The video and sound channel in color television receivers compares exactly with conventional black and white television sets. For simplicity of design and most efficient r.f.-i.f. amplification, intercarrier i.f. sound amplification is used. However, separate germanium diodes may be used to detect the 4.5 mc sound i.f. and the video. The conventional discriminator or ratio detector is used to detect the audio.

Video Detector

The 2nd video detector output consists of the composite color television signal which was originally made up in the matrix; the I and Q sidebands, the reference burst, the monochrome, and the vertical and horizontal synchronizing pulses.

Y Channel

The luminance channel in a color receiver does exactly the same operation as familiar video amplifiers in black and white sets. A delay line is added to prevent the Y signal from arriving at the picture tube ahead of the I and Q signals which have a low-pass filter in each channel.

Band Pass Amplifier

The band pass amplifier is a typical pentode which amplifies the chrominance sidebands between 2.0 to 4.2 megacycles; all other video information is filtered out. The chrominance signal is applied directly to the I and Q signal demodulators. Here the sideband information will be converted into E_I' and E_Q' color video signal voltages just like the E_I' and E_Q' output of the matrix in the transmitter colorplexer. A horizontal blanking pulse gates the Band Pass Amplifier. Therefore, it does not pass the 3.579545 mc burst.

Color Demodulation

Up to here all color TV receivers have almost identical stages. The FCC, mindful of practical needs such as cost of a color TV receiver, made it possible to demodulate the transmitted signal directly in two ways: either the I and Q signals, or the color-minus-brightness B-Y and R-Y signals.

Referred to as a "wide band chrominance" receiver or just "wide band" receiver, one color TV receiver demodulates the I and Q signal. Since E_I is the wideband chrominance voltage, it is demodulated as is in the wide band color TV receiver. In contrast, a narrow band color TV receiver demodulates the color-minus-brightness signals B-Y and R-Y after the E_I' bandwidth is reduced to that of E_Q'.

The local crystal oscillator provides a 3.579545 mc continuous wave signal which is phase shifted 33° and applied to the Q demodulator. Here, the Q signal sidebands are mixed with the cw signal and the E_Q' signal appears at the output of the demodulator. Before the phase shifted oscillator output can be applied to the I demodulator, it must be shifted in phase another 90° in order that it may properly mix with the I signal sidebands. The output of the I demodulator is E_I', the wideband chrominance signal.

Color Sync

An outstanding difference between a color television receiver circuit and the conventional black and white set is the additional "color synchronizing" section in the color set. The 3.579545 mc crystal oscillator and its control circuits make up the color synchronization.

Phase Detector

Since the local 3.58 mc oscillator replaces the absent color subcarrier, it is important to keep this oscillator in correct phase either for wideband or narrow band detection. The reference burst of nine cycles of 3.58 mc on the back porch of the sync pulse helps maintain this local cw in correct phase for both types of receivers. First, let's examine the action in Figure 7A for the wideband color TV receiver.

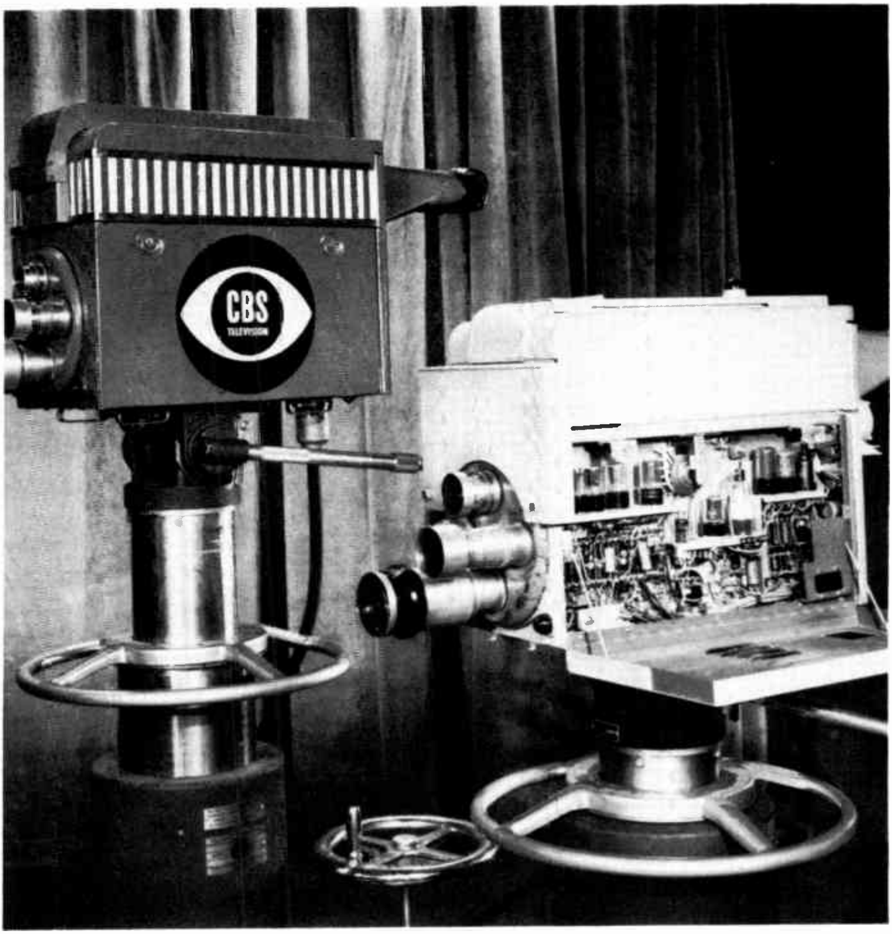

The color television camera on the right is equally as compact and maneuverable as the standard black and white television camera. This color camera provides field sequential color television pictures which are converted to the NTSC color television signal. Only one image orthicon is required.

Courtesy Columbia Broadcasting System, Inc.

A sample of the local oscillator is applied to a phasing amplifier where it is passed to a phase detector. Here, the cw is compared with the reference burst. Any discrepancy develops an "error" voltage that is applied to an oscillator control amplifier. From here, a correction voltage immediately changes the oscillator frequency.

An important phasing control in the wide band chrominance receiver is associated with the phasing amplifier. When this control is properly adjusted, the oscillator is furnishing a 33° phase shifted signal. The incoming reference burst maintains this 33° phase shift because the phase detector compares both signals and detects any changes after the phase control is adjusted. This control may be used on the front panel for the viewer to adjust the color tone of the picture.

In the narrow band receiver of Figure 7C, the B-Y and R-Y sidebands are detected. However, note the 3.58 mc cw signal is not shifted 33°, although the sidebands are kept 90° apart by a phase shift network. This conforms to Equation 7 where no 33° appears.

Color Matrix

The demodulated Q signal is filtered for correct narrow-band color frequencies, 0 to 500 kc. A Q signal phase-splitter provides Q signal voltages of the proper amplitude and phase for the color matrix.

The same operations are performed on the I signal wideband color information from 0 to 1.5 mc.

Color-Minus-Brightness

The color matrix combines these voltages to furnish the three primary "color-minus-brightness" voltages. These voltages are applied to the control grids of separate color electron guns in the color picture tube.

Color-minus-brightness signal voltages can be described as very special forms of color video information from which the brightness or luminance value has been removed. This notion was introduced in this lesson when the matter of redundancy was described, but more can be said for these color difference signals at this point because of their direct application at the color television picture tube. Let us see first, exactly what a "color-minus-brightness" signal is.

Take, for an example, "red-minus-brightness," or $(E_R' - E_Y')$. This expression may be given in a more useful form by substituting Equation (1) for E_Y' and then solving the new expression in terms of E_R', E_G', and E_B'.

$$\begin{aligned}(E_R' - E_Y') &= E_R' - (0.30\,E_R' + 0.59\,E_G' \\ &\quad + 0.11\,E_B') \\ &= 0.70\,E_R' - 0.59\,E_G' - 0.11\,E_B'\end{aligned}$$

By the same method, an expression which describes "green-minus-brightness" may be obtained.

$$\begin{aligned}(E_G' - E_Y') &= E_G' - (0.30\ E_R' \\ &\quad + 0.59\ E_G' + 0.11\ E_B') \\ &= 0.41\ E_G' - 0.30\ E_R' - 0.11\ E_B' \qquad (9)\end{aligned}$$

The purpose for giving these two equations is to emphasize the relation between the "color-minus-brightness" video signals and regular color video voltages E_R', E_G', and E_B'.

"Blue-minus-brightness" is determined the same way. It too, is derived from the E_Y' equation.

$$\begin{aligned}(E_B' - E_Y') &= 0.89\ E_B' \\ &\quad - 0.30\ E_R' - 0.59\ E_G' \qquad (10)\end{aligned}$$

The color matrix in the color television receiver combines specific quantities of I and Q signal voltages which have been obtained from the demodulators and produces these primary "color difference" signals just described. These voltages from the color matrix are applied to the control grid of the separate color designated electron guns in the color picture tube.

Adders

Special combinations of E_I' and E_Q', shown on the receiver block diagrams of Figure 7, are required in order to obtain the desired "color difference" signals.

In the transmitter matrix, the output voltages E_Y', E_I', and E_Q' are formed by combining fixed portions of the input voltages E_R', E_B', and E_G'. Therefore, in the receiver, a reverse matrix operation is employed. Fixed portions of E_Y', E_I', and E_Q' must be added together to produce E_R', E_B', and E_G'.

For the wide band receiver of Figure 7A the matrix action is pictured by Figure 7B. To produce E_R', $-1.0\ E_Y'$, $.945\ E_I'$, and $.621\ E_Q'$ are combined into one voltage. In like manner $-1.0\ E_Y'$, $-1.11\ E_I'$, and $1.72\ E_Q'$ form E_B', and $-1\ E_Y'$, $-2.71\ E_I'$, and $-.647\ E_Q'$ produces E_G'.

Finally each of these voltages is applied to the appropriate control grid on the picture tube as shown in Figure 7A and the colors are reproduced on the screen.

In a narrow band receiver the E_R', E_B', and E_G' voltages are produced in a slightly different manner. The block diagram for this narrow band receiver is like the wide band receiver except that the blocks shown in Figure 7C replace the portion outlined with a dashed line in Figure 7A. Now the detectors produce $E_R' - E_Y'$ and $E_B' - E_Y'$ instead of E_I' and E_Q'. Therefore, to get the three voltages, E_R', E_B', and

E_G' between the appropriate grid and cathode two steps are taken. First a simple matrix is used to form $E_G' - E_Y'$.

As shown in Figure 7D adding -0.19 $(E_B' - E_Y')$ and -0.51 $(E_R' - E_Y')$ produces $E_G' - E_Y'$.

Now all three of these color difference signals are applied to the appropriate grid. However, this is not the complete story, since it is the color signal and not the color difference signal that produces the proper color on the screen. Therefore, the E_Y signal must be inserted at the picture tube cathode. As a result, between each grid a color signal is produced by adding the E_Y' signal to the color difference signal. For example, $E_G' - E_Y' + E_Y'$ gives E_G'.

COLOR REPRODUCTION

With these various steps in mind it would be very helpful to trace several colors through this color system to see how they affect the signals and reappear on the receiver screen. To do this bear in mind the following signals are developed by the transmitter matrix in Figure 4:

$$E_Y' = .30\ E_R' + .59\ E_G' + .11\ E_B' \qquad (1)$$

$$E_I' = .60\ E_R' - .28\ E_G' - .32\ E_B' \qquad (2)$$

$$E_Q' = .21\ E_R' - .52\ E_G' + .31\ E_B' \qquad (3)$$

To further simplify this problem let us assume that the voltage developed by the camera is the same level required by the picture tube. If more is needed, equal amplification can be added to each channel.

White

For white light let's assume our camera puts out 4 v for each color as shown in column 1 of Chart 1. By using the FCC equations, E_Y' is also 4 v. Subtracting the brightness voltage from each color, all the color differences voltages are zero. E_I' and E_Q' are also zero, therefore the chrominance voltage E_C' is zero.

Gray

For a gray of exactly ½ the luminance of case 1 of Chart 1, each voltage is 2 v, hence, $E_Y' = 2$ v. Again, all the voltages are zero.

Red

For a red object at a given level of illumination, the camera output is given by the first three lines in column 2 of Chart 1 as:

$$E_R' = 4 \text{ v} \qquad E_B' = E_G' = 2 \text{ v}$$

Therefore, each of the remaining voltages can be computed by using the FCC equations. The results also are listed in column 2.

Suppose the object scanned has the same saturation and hue, but twice the luminance. Its component gamma corrected color voltages R, G, and B are 8.0 v, 4.0 and 4.0 as shown in the third column. Then, E_Y' is 5.2 v or twice the previous luminance voltage of 2.6 volt. Note that the color difference voltages, the I and Q vectors, and the chrominance vector C all are exactly doubled.

The saturation remains constant because an increase in luminance voltage E_Y' was followed by an equal increase in chrominance voltage E_C'. Another way to say the same thing is that saturation of one color is the same as that of another color when the ratio E_C'/E_Y' is the same.

Since $\frac{1.3}{2.6}$ and $\frac{2.6}{5.2}$ are both equal to ½ as shown by the next to last line, the saturation is the same for this hue. The hue also remains constant. This is indicated by the same ratio for E_Q'/E_I'. That is, $\frac{.42}{1.2}$ and $\frac{.84}{2.4}$ are both equal to $\frac{7}{20}$

In column 4, a still brighter red has more luminance than the red of column 3 because the luminance voltage E_Y' has increased from 5.2 volts to 6 volts. However, the hue is the same and the saturation of the color is reduced. These are indicated by the fact that E_Q'/E_I' is the same and E_C'/E_Y' has reduced.

Column 5 on the other hand shows the same red hue luminance as column 2 but with an increase in saturation as shown by the changed ratio. These facts are indicated by the hue ratio and E_Y' remaining the same although the saturation ratio changes.

Finally in column 6 is a blue-green color with a hue the complement of the red shown in columns 2 through 5. Notice that the hue ratio is the same but E_Q' and E_I' are now negative numbers.

These six colors have pointed up some important ideas to be kept in mind while servicing color TV receivers. They are:

(1) that for a white, $E_I' = E_Q' = 0$ v.

(2) the luminance can remain constant, while the hue and saturation change.

(3) that the hue changes when the angle between E_Q'/E_I' changes.

(4) saturation changes when E_C'/E_Y' changes.

THE COLOR KILLER

The color television receiver will reproduce standard black and white television broadcasts as readily as standard black and white television receivers. To do this, when a black and white television broadcast is received, a special "color killer" circuit in wide band receivers provides a cut-off bias voltage at the grid of the Band Pass Amplifier. Then, no signals are applied to either the I or Q channel in the color receiver.

Black and White Pictures

The standard black and white video information is amplified in the luminance channel from the composite video amplifier. The black and white video is applied, in correct picture phase, to the cathode of the color picture tube and appears as a black and white picture on the screen.

A positive voltage from the horizontal output transformer initiates conduction in the color killer amplifier which, in turn, applies a cut-off voltage to the Band Pass Amplifier.

Color Pictures

When color video is being received, a cut-off voltage from the phase detector is applied to the grid of the color killer, and when the color killer is at cut-off, the Band Pass Amplifier is permitted to conduct and amplify the incoming I and Q signals.

SWEEP CIRCUITS

The horizontal and vertical sweep circuits in a color receiver operate in precisely the same manner as sweep circuits in conventional black and white television receivers. Conventional vertical and horizontal free-running blocking oscillators may be used.

Incoming synchronizing pulses are obtained from the composite video amplifier and applied to appropriate sync separator and amplifier circuits. Like in monochrome receivers, these maintain the frequency of the sweep oscillators in sync with the incoming video signal.

Oscillators

The sweep oscillators furnish the proper sweep drive required for the vertical output amplifier and the horizontal output amplifier just as it is done in any black and white television receiver.

Sweep Output

The vertical output amplifier is transformer coupled to the vertical deflection coils and, with the familiar horizontal output transformer, the horizontal output amplifier is coupled to the horizontal deflection coils.

High Voltage

The 20 kv anode voltage is developed in the conventional way. The most efficient of course, is the "fly-back" type system with high voltage rectifiers, in a doubler arrangement when it may be required to obtain relatively high anode voltage.

Dynamic Convergence

Color picture tubes require some special deflection care which was not necessary in black and white picture tubes. When a three-gun picture tube such as is shown on the block diagram, is used each electron beam must arrive at the same "triad" of color dots; the beams must meet and cross over at the same point on the shadow mask. Adjustment is made for "d-c convergence" at the center of the screen. Then, both vertical and horizontal "dynamic convergence" furnishes an instantaneous convergence correction as the three beams are deflected over the many different picture elements. Dynamic convergence prevents the beams from diverging as the tube is swept over the entire area of the picture tube.

Focus Rectifier

The focus rectifier obtains a high voltage pulse from the horizontal output transformer. The pulse is rectified and filtered and applied to the focusing anode in the color picture tube.

Keyed AGC

An AGC amplifier is useful to counteract undesirable changes in incoming signal level. A filtered d-c control voltage is applied to the grid of the AGC amplifier. This voltage, proportional to the amplitude of horizontal synchronizing pulses at the sync separator, may be adjusted for best performance. A positive pulse from the horizontal output transformer provides the positive plate voltage; the plate is "keyed" at the horizontal frequency. The output of the AGC amplifier is filtered and a negative control voltage is applied to the tuner and the video i-f amplifiers.

The subsequent lessons concentrate on the specialized circuits which may be found in color television receivers. The aim in this lesson has been to follow the signal from camera to picture and see what is needed in the way of special circuits. In the next lesson we shall describe some of these circuits.

IMPORTANT DEFINITIONS

CHROMINANCE SIGNAL—[KROH mi n'ns SIG n'l]—(C)—The hue and saturation of the reproduced picture element added to the brightness signal to make up the composite. It is color video information.

$$E_C' = E_Q'\sin(\omega t + 33°) + E_I'\cos(\omega t + 33°).$$

COLOR BURST—See Reference Burst.

COLOR MATRIX—[KUHL er MAY triks]—An array of counter circuits arranged to select certain percentage of input signals to produce the desired output signals.

COLOR SUBCARRIER—The 3.579545 mc carrier, modulation sidebands of which are combined with the brightness signal to make up the composite color signal: sin ωt.

COMPOSITE COLOR SIGNAL—The complete color signal including the monochrome signal, chrominance sidebands, blanking, and all synchronizing signals as

$$E_M = E_Y' + [E_Q'\sin(\omega t + 33°) + E_I'\cos(\omega t + 33°)].$$

D.C. CONVERGENCE—[dee see k'n VERJ 'ns]—The electrostatic correction required in order that the electron beam from each color gun meet at the same point at the center of the shadow mask in the color picture tube.

DYNAMIC CONVERGENCE—[digh NAM ik k'n VERJ 'ns]—The correction required during vertical and horizontal deflections in order that the electron beam from each color gun meet at the same point on the shadow mask, cross over each other, and arrive at the same "triad" of color phosphor dots on the picture tube faceplate.

GAMMA CORRECTION—[GAM uh kuh REK sh'n]—An exponential correction of E_R, E_G, and E_B at the output of a color television camera in order to compensate for non-linear fluorescent characteristics of picture tube phosphors. It is indicated with a prime (′); i.e., E_R', E_G', E_B', etc.; which represents an exponent which is the reciprocal of 2.2.

IMPORTANT DEFINITIONS—(Continued)

I SIGNAL—One of the orthogonal sideband components produced by modulating the 3.579545 mc subcarrier with E_I' after the subcarrier is phase-shifted 123°; $E_I' \cos(\omega t + 33°)$.

LUMINANCE SIGNAL—[LOO mi n'ns SIG n'l]—(Y)—The monochrome part of the composite color video signal which determines the luminance of color television pictures, and which provides the picture for standard black and white television sets. It is defined by the FCC as:

$$E_Y' = 0.30\ E_R' + 0.59\ E_G' + 0.11\ E_B'.$$

PHASE REFERENCE—A particular phase of the color subcarrier frequency which is used as a reference point.

Q SIGNAL—One of the orthogonal sideband components produced by modulating the 3.579545 mc subcarrier with E_Q' after the subcarrier is phase shifted 33°; $E_Q' \sin(\omega t + 33°)$.

REFERENCE BURST—Nine cycles of 3.579545 mc, phase inverted with respect to the phase reference ,and transmitted after each horizontal synchronizing pulse during horizontal retrace blanking. The reference burst is not transmitted during vertical retrace.

TRIAD—[TRIGH ad]—A group of three color phosphor dots arranged in an equilateral triangle and consist of one red-emitting dot, one green-emitting dot, and one blue-emitting dot.

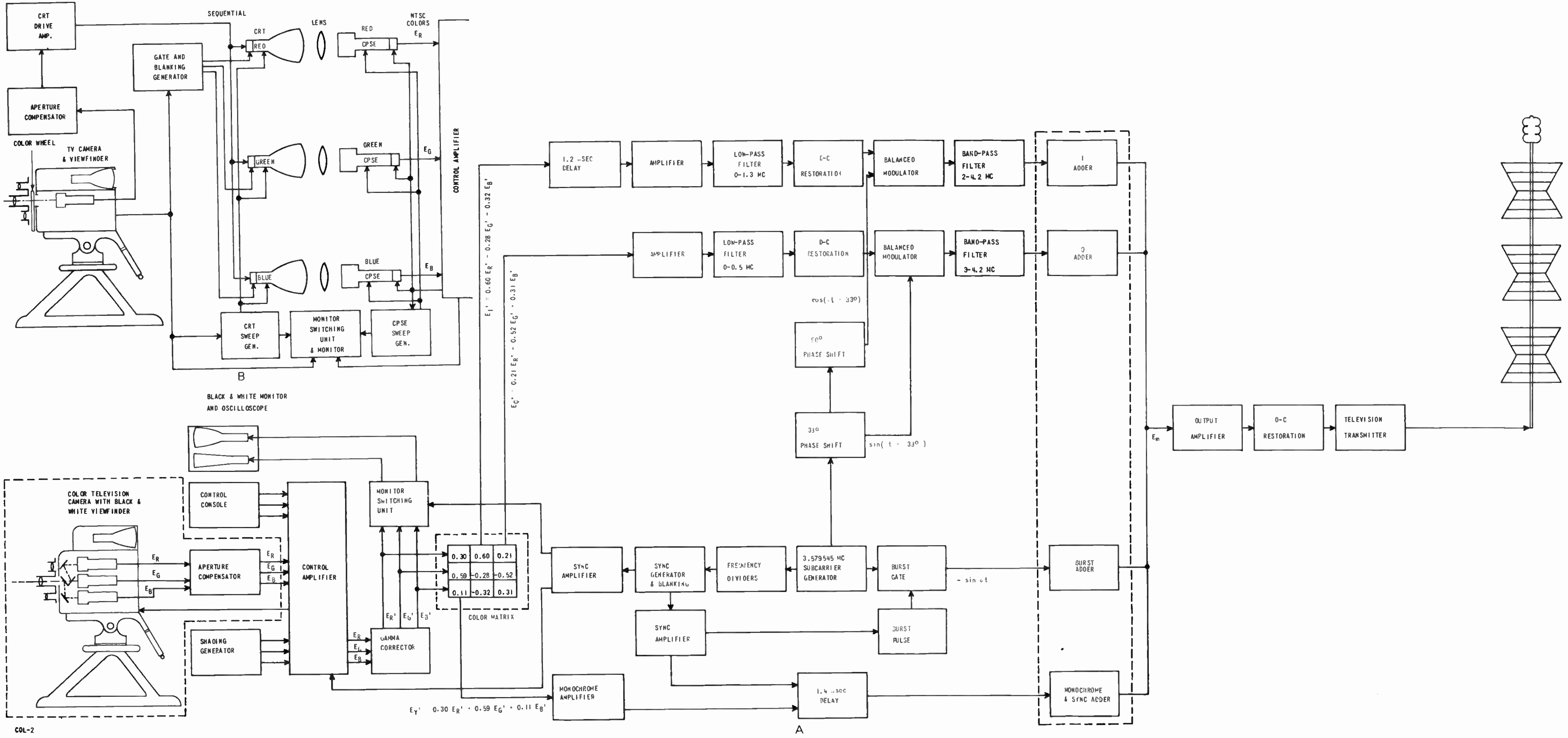
CRT DRIVE AMP.
SEQUENTIAL
GATE AND BLANKING GENERATOR
APERTURE COMPENSATOR
COLOR WHEEL
TV CAMERA & VIEWFINDER
CRT
RED
GREEN
BLUE
LENS
RED
CPSE
GREEN
CPSE
BLUE
CPSE
NTSC COLORS
E_R
E_G
E_B
CONTROL AMPLIFIER
CRT SWEEP GEN.
MONITOR SWITCHING UNIT & MONITOR
CPSE SWEEP GEN.
B
BLACK & WHITE MONITOR AND OSCILLOSCOPE
COLOR TELEVISION CAMERA WITH BLACK & WHITE VIEWFINDER
CONTROL CONSOLE
APERTURE COMPENSATOR
SHADING GENERATOR
CONTROL AMPLIFIER
MONITOR SWITCHING UNIT
GAMMA CORRECTOR
E_R' E_G' E_B'
0.30 0.60 0.21
0.59 -0.28 -0.52
0.11 -0.32 0.31
COLOR MATRIX
E_I' = 0.60 E_R' - 0.28 E_G' - 0.32 E_B'
E_Q' = 0.21 E_R' - 0.52 E_G' + 0.31 E_B'
E_Y' = 0.30 E_R' + 0.59 E_G' + 0.11 E_B'
1.2 μSEC DELAY
AMPLIFIER
LOW-PASS FILTER 0-1.3 MC
D-C RESTORATION
BALANCED MODULATOR
BAND-PASS FILTER 2-4.2 MC
I ADDER
AMPLIFIER
LOW-PASS FILTER 0-0.5 MC
D-C RESTORATION
BALANCED MODULATOR
BAND-PASS FILTER 3-4.2 MC
Q ADDER
cos(ωt + 33°)
90° PHASE SHIFT
33° PHASE SHIFT
sin(ωt + 33°)
SYNC AMPLIFIER
SYNC GENERATOR & BLANKING
FREQUENCY DIVIDERS
3.579545 MC SUBCARRIER GENERATOR
BURST GATE
- sin ωt
BURST ADDER
SYNC AMPLIFIER
BURST PULSE
MONOCHROME AMPLIFIER
1.4 μsec DELAY
MONOCHROME & SYNC ADDER
A
E_m
OUTPUT AMPLIFIER
D-C RESTORATION
TELEVISION TRANSMITTER
COL-2

FIGURE 4

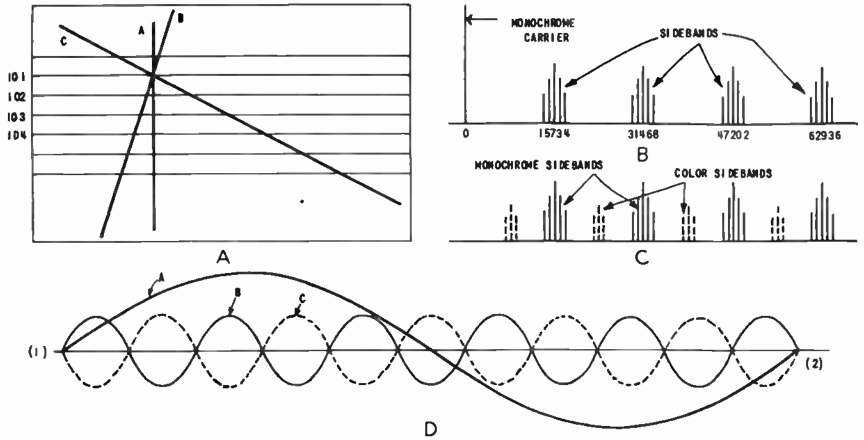

FIGURE 1

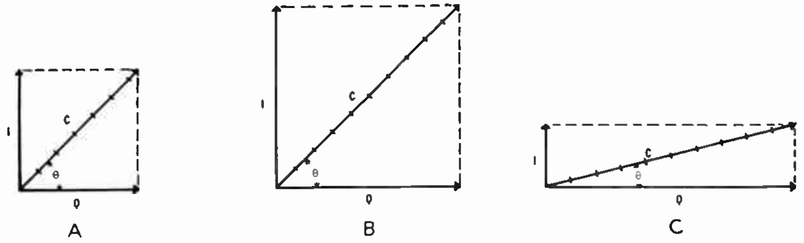

FIGURE 2

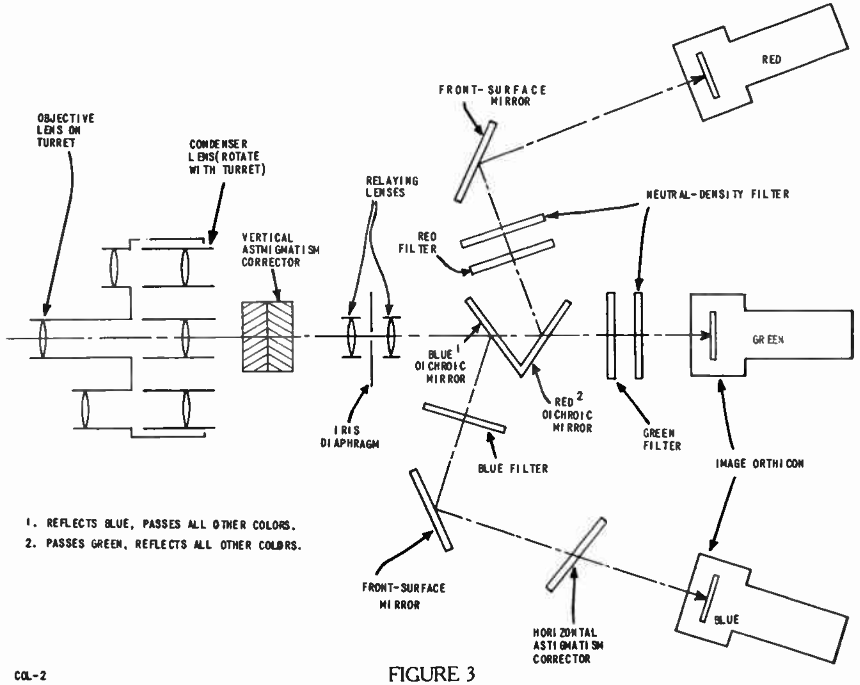

1. REFLECTS BLUE, PASSES ALL OTHER COLORS.
2. PASSES GREEN, REFLECTS ALL OTHER COLORS.

FIGURE 3

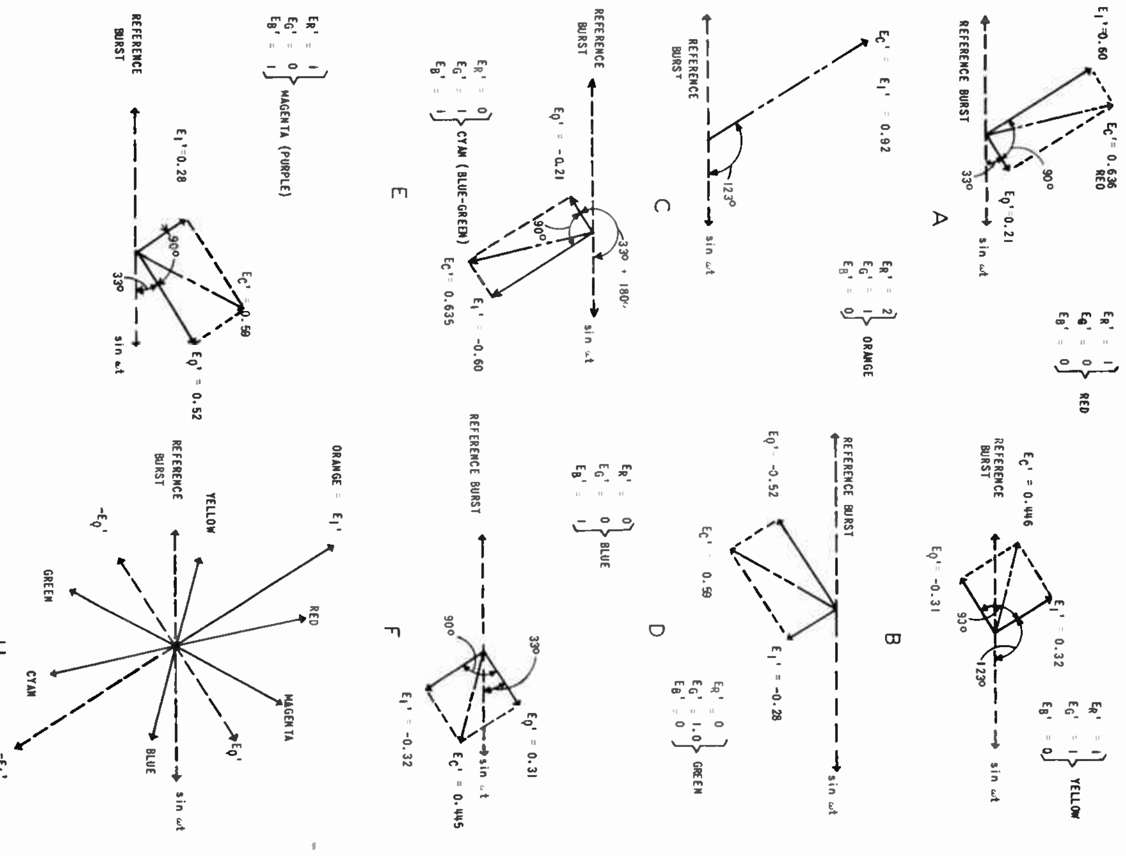

FIGURE 5

COL-2

COLOR TO BE TRANSMITTED	E_R'	E_G'	E_B'	E_Y'	E_I'	E_Q'	E_C'
RED	1	0	0	0.30	0.60	0.21	0.636
YELLOW	1	1	0	0.89	0.32	-0.31	0.446
ORANGE	2	1	0	1.19	0.92	*	0.92
GREEN	0	1	0	0.59	-0.28	-0.52	0.59
CYAN	0	1	1	0.70	-0.60	-0.21	0.635
BLUE	0	0	1	0.11	-0.32	0.31	0.445
MAGENTA	1	0	1	0.41	0.28	0.52	0.59
WHITE	1	1	1	1.0	0	0	0
BLACK	0	0	0	0	0	0	0

* E_Q' SHOULD BE ZERO

COL-2

FIGURE 6

	1	2	3	4	5	6
E_R'	4.0	4.0	8.0	8.3	7.5	2
E_G'	4.0	2.0	4.0	5.0	0.5	4
E_B'	4.0	2.0	4.0	5.0	0.5	4
E_Y'	4.0	2.6	5.2	6.0	2.6	3.4
E_R-E_Y'	0	1.4	2.8	2.3	4.9	-1.4
$E_G'-E_Y'$	0	-0.6	-1.2	-1.0	-2.1	0.6
$E_B'-E_Y'$	0	-0.6	-1.2	-1.0	-2.1	0.6
E_Q'	0	0.42	0.84	0.7	1.5	-.42
E_I'	0	1.2	2.4	2.0	4.2	-1.2
E_C'	0	1.3	2.6	2.1	4.5	-1.3
SATURATION RATIO $\frac{E_C'}{E_Y'}$		$\frac{1}{2}$	$\frac{1}{2}$	$\frac{7}{20}$	$\frac{9}{5}$	$\frac{13}{34}$
HUE RATIO $\frac{E_Q'}{E_I'}$		$\frac{7}{20}$	$\frac{7}{20}$	$\frac{7}{20}$	$\frac{7}{20}$	$\frac{7}{20}$

CHART 1

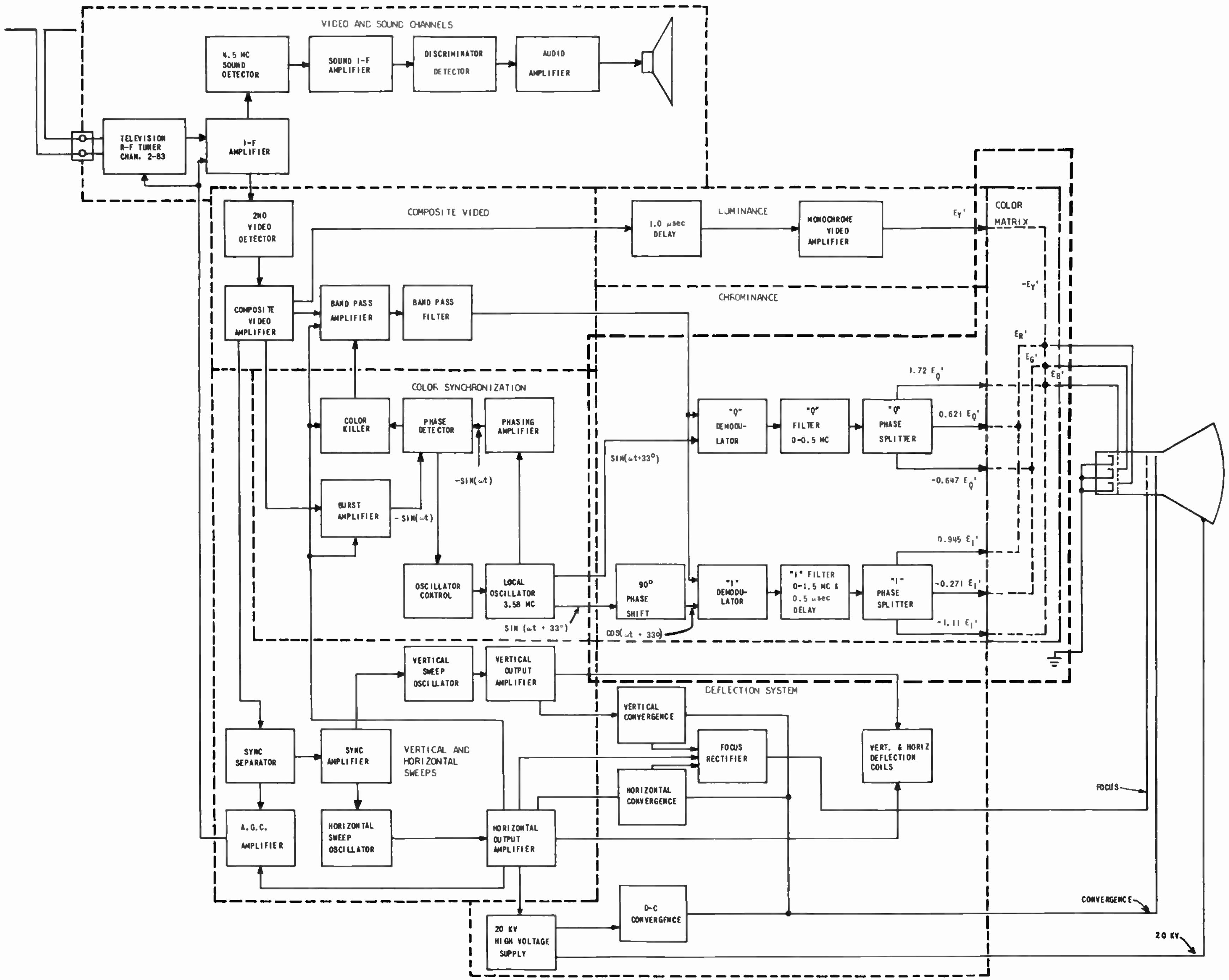

COL-2

A

FIGURE 7

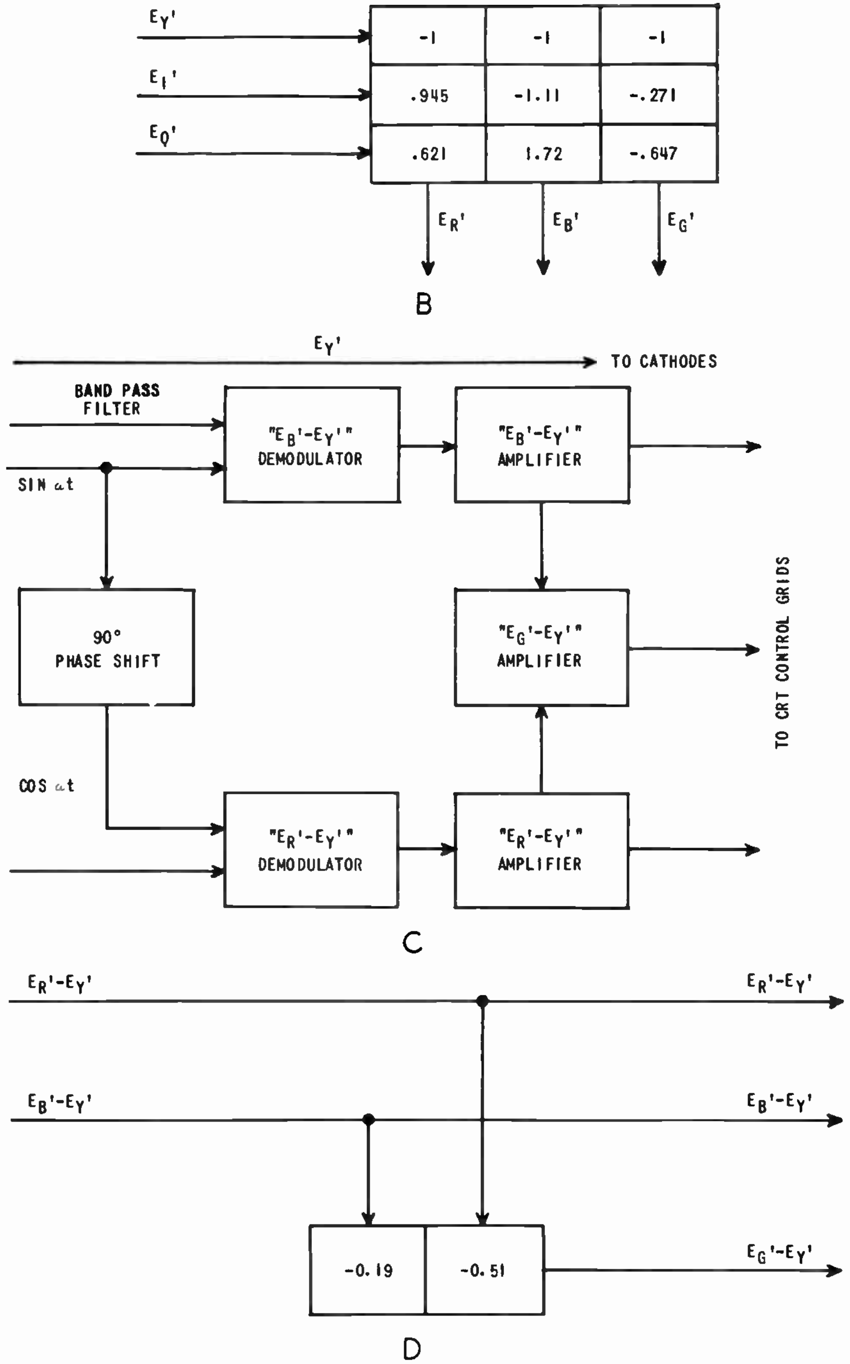

COL-2B

FIGURE 7

DeVRY Technical Institute

Formerly DeFOREST'S TRAINING, INC.

4141 WEST BELMONT AVENUE CHICAGO 41, ILLINOIS

QUESTIONS

Color Television Signals—Lesson COL-2B

1

How many advance Lessons have you now on hand?

Print or use Rubber Stamp.

Name

Student No.

Street

Zone

Grade

City

State

Instructor

Write your answers on the "Ans." line below each question. If more space is needed use reverse side of this page.

1. Which signal is common to both the color and black and white TV receivers?

Ans.

2. What is the angle between the reference burst vector and the phase reference vector?

Ans.

3. At the output of which stage is the 3.58 mc subcarrier removed?

Ans.

4. What is the angle between the E_Q' and E_I' vectors?

Ans.

5. What signals does the phase detector compare in a wideband color TV receiver?

Ans.

6. In a narrow band color TV receiver, what is the circuit preventing the monochrome signal from entering the chrominance section?

Ans.

7. Why is dynamic convergence of the electron beams required in the color picture tube?

Ans.

8. Which voltages are demodulated in a narrow band color TV receiver?

Ans.

9. Using Table 1, with the same luminance for two chromatic colors, can E_C' be different?

Ans.

10. Using Table 1, with two colors of the same saturation, can E_C' be different?

Ans.

FROM OUR *Director's* NOTEBOOK

WHO WINS?

As a businessman, you probably will run into the problem of the customer whom you just can't satisfy. No matter what you do, his rather old set doesn't work the way he believes it should.

How are you going to handle his complaint? Argue with him? Arguing won't get you anywhere, nor will it solve the problem.

Tell him you've done everything necessary, that such things as age of the receiver, location and many other things tend to reduce its efficiency after long use.

After you have explained this, make one more real effort to correct the trouble. If this still doesn't satisfy him, tell the customer you will stand behind everything you have done, but that nothing further can be accomplished.

Compare the receiver to his car. He doesn't expect an old auto to run as well as a new one. If he is at all reasonable, you can make him see that a radio or TV set—like everything else—reaches the point where extensive repairs are impractical.

Agree with him insofar as possible. But never argue with a customer. You always lose.

Yours for success,

W. C. DeVry

DIRECTOR

PRINTED IN U.S.A.

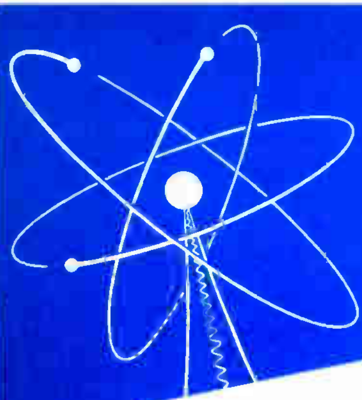

COLOR DEMODULATION

Lesson COL-3B

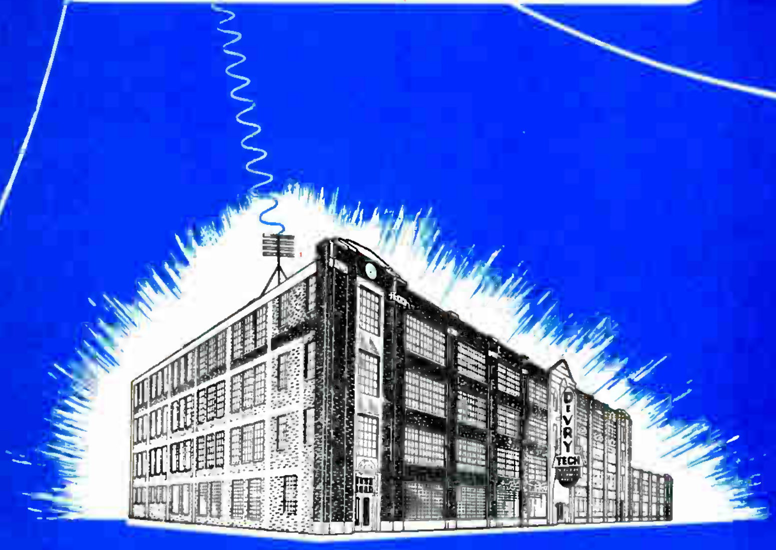

DeVRY Technical Institute
4141 W. Belmont Ave., Chicago 41, Illinois
Formerly DeFOREST'S TRAINING, INC.

COL-3B

COLOR DEMODULATION

ELECTRONICS
TELEVISION
DTI
DeVRY Technical Institute

4141 Belmont Ave.

Chicago 41, Illinois

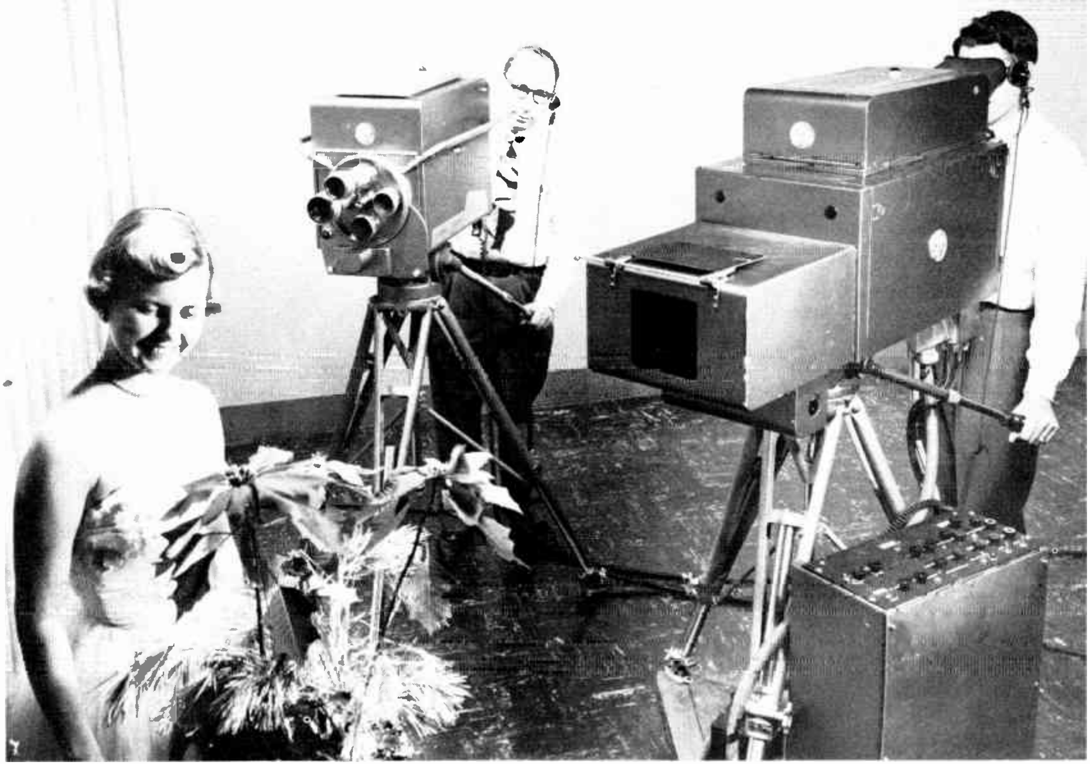

A single tube color TV camera is shown at the left. The one on the right is a three tube color TV camera.

Courtesy General Electric Company

Color Television

COLOR DEMODULATION

Contents

He was a wise man who said: "As I grow older I pay less attention to what men say. I just watch what they do."

—Wilfred A. Peterson

COLOR DEMODULATION

In a previous lesson, we described the three basic attributes of color. These were brightness, hue, and saturation. Since only brightness is provided in a monochrome picture, two added characteristics must be included in the color television system.

However, to be compatible, reproduce a picture of pleasing quality, and still retain the 6 mc channel established for monochrome transmission, the signals have to be combined carefully to provide compact transmission with minimum interference.

THE COLOR TV TRANSMITTER

This signal multiplexing for color transmission requires circuits that are not used in the conventional black and white equipment. Possibly the outstanding new signal circuit in the transmitter is the balanced modulator. Before considering these circuits, however, again lets briefly trace the signal path from the camera to these modulators as shown in Figure 1.

When light is reflected from a scene into the camera, three output voltages, E_R, E_G, and E_B are produced. Each is directly proportional to the amount of its primary light reflected from the scene for that picture element.

These three voltages are immediately fed into an amplifier circuit called the Gamma Correction Circuits. These amplifiers are designed to have non-linear characteristics which correct the primary color voltages so that the light output of the picture tube is directly proportional to the light input to the camera. Once gamma corrected, these voltages are labeled E_R', E_G', and E_B'.

However, even gamma corrected color voltages are not satisfactory for the color transmission. For one thing, not one of the three represents the brightness of the scene. Therefore, individually they are not satisfactory for monochrome reception. Also, these three signals together supply far more information than is useful even in a color receiver.

Matrix

Therefore, all three voltages are fed into a matrix where samples of each voltage are combined to form three completely different output voltages called the E_Y', E_Q', and E_I'.

The samples of each color taken for the luminance signal are determined by how sensitive the eye is to the brightness in each color. As shown by the FCC equation for E_Y', the eye is about twice as sensitive to the green as the red, and only about ⅓ as sensitive to the blue as the red. Consequently the E_Y' voltage makes an excellent black and white picture for monochrome television and a complete brightness signal for color television.

The E_Q' and E_I' voltages on the other hand, do not determine the brightness. The amplitudes of these two signals determine the saturation of the color transmitted at the brightness of E_Y'; the ratio between their amplitudes determines the hue.

It is not necessary for E_Q' and E_I' to have equal bandwidths. The eye sees three colors for large areas but for somewhat smaller areas the green, yellow, deep blues, magenta, and purples all appear to the eye as some saturation of an orange-red or a greenish-blue. Therefore, at those frequencies which produce areas this small, one signal can be filtered out if the remaining signal by itself indicates one of these two colors when positive and the remaining color when negative.

This is precisely what is done in the matrix: positive E_I' represents various saturations of orange-red and negative values are in the green-blues. Therefore, E_Q' is not needed above .5 mc for good picture reproduction.

Where these signals would appear on the chromaticity diagram is shown in Figure 2. Remember that on the chromaticity diagram all the colors are of the same luminance. Note how the "I axis" runs from the orange-red, through white, to the green-blue while the "Q axis" goes from green, through white, to the purples and "deep" blues. As a result of these two signals, E_I' and E_Q', a chroma signal can be developed which would project to any desired point on the diagram. Suggestive of these functions is the vector marked saturation. The amplitude determines how far out it reaches on the chromaticity diagram from white at point C. Hence, amplitude determines the saturation. The rotation of this vector around white places it over different hues on the graph.

The R, B, and G dots on this chart are the three primary colors as defined by the FCC for color telecasting. Therefore all hues and saturations within the triangle formed by lines joining these three dots can be reproduced by the system. Fortunately this covers a vast majority of the colors that appear in commonplace scenes.

Bandwidth

Because of the inability of the human eye to distinguish hue or saturation differences in small areas, the I and Q color signals are not allotted the same bandwidth as the Y (luminance) signal.

The bandwidth required for the two color signals is restricted to the ranges of frequencies which produces large enough picture areas for the eye to distinguish color differences.

Colors extending from purple to yellow-green constitute the color spectrum over which the eye has the least resolving power. Through experimentation, it has been found that a bandwidth of .5 or .6 mc is sufficient to handle this frequency spectrum. The Q chrominance signal is chosen to correspond to this band of colors.

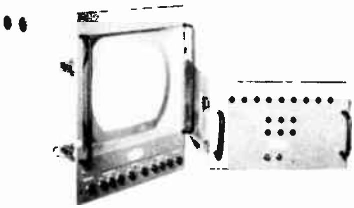

The color TV monitor shown above is used to check the quality of color television signals.
Courtesy Polarad Electronics Corporation

Going back to the block diagram of Figure 1, a 0 — .5 mc filter in the E_Q' circuits limits this signal to the low frequencies at which a three color system is beneficial. From .5 to 1.3 mc two colors add to the picture quality, but above this frequency the picture areas are so small that no color is detected by the eye. Consequently, a 0 — 1.3 mc filter in the E_I' circuits cuts off all frequencies above this point. For these minute details, only the monochrome E_Y', signal is needed.

When a filter is included, it creates signal delay and the narrower the bandwidth the longer the delay. Consequently, delay lines must be included in the E_I' and E_Y' channels so that all three signals arrive at the transmitter modulator at the same instant.

As specified by the FCC, the E_I' voltage must be in quadrature with the E_Q' information and thus the two voltages are 90° apart in phase. Furthermore, the same FCC definitions specify that E_Q' is 33° from the phase reference. This forces E_I' to be $90° + 33°$ or 123° from the phase reference.

All these statements are shown pictorially in Figure 3A. For the sake of illustration E_I' and E_Q' are vector lengths representing some specific voltages at some luminance E_Y'. By completing the rectangle for E_I' and E_Q' in dotted lines, a line drawn from zero (0) to the opposite corner is the chrominance voltage E_C'. Thus E_C' represents all the hue and saturation in the televised scene. Note that the color difference or color minus brightness voltage $E_R' - E_Y'$ and $E_B' - E_Y'$ also produce the same vector length E_C'.

Considerable care was taken in the development of the color signal standards to make this possible. By means of these relationships a narrow band receiver can be built economically which demodulates the E_C' signal directly into two color difference signals.

For the given luminance of the televised scene, the vector E_C' represents the chrominance voltage of some specific saturation and hue on the chromaticity chart in Figure 2. Taking the phase reference as zero degrees in Figure 3, the curved line representing zero degrees in Figure 2 is the same hue. It goes through white at point C and B-Y. Thus, the colors along the curved line at 0° represent various saturations of blue.

At the 33° curved line in Figure 2 is the color representing various E_Q' voltages of Figure 3. As the curve in Figure 2 passes through zero towards yellow, it becomes the 213° line. These yellows are the complementary colors to the blues. In Figure 3, the vector $-E_Q'$ is at 213°, representing in vector form the complementary hue. Knowing how to compute the saturation and knowing the exact hue angle, locates one color on the chromaticity chart for a given luminance. However, insofar as color TV servicing is concerned, neither of these need be computed; only how each affects the overall signal should be understood.

The I and Q signals contain the color information in the televised scene, but these must modulate a given subcarrier in order to produce frequency interlace. Direct application of both signals to a single carrier would cause a complete mixture impossible to separate at the receiver.

To overcome this difficulty, the color subcarrier, supplied to the I and Q balanced modulators, is two sine waves of the same frequency but 90° apart. This is indicated by the vectors of Figure 3A. With this arrangement, the color information of one signal can amplitude modulate one phase of the color subcarrier without any reaction with the other color signal which amplitude modulates the second phase of the color subcarrier. Therefore, simultaneous transmission of the two sets of color information without interaction between them is possible.

Information transmitted in this form can be detected and separated at the color receiver by heterodyning the modulated signal with a sine wave of the same frequency and phase as the carrier component used to generate this information. This process is referred to as synchronous demodulation. It is the type of color detection found in broadcast television receivers.

Balanced Modulators

To suppress the color subcarrier, a balanced modulator circuit is used. This circuit arrangement produces sidebands but suppresses the carrier and other undesired frequencies.

Artificial delay lines are used wherever mounting space is an important factor.
Courtesy Shallcross Mfg. Co.

Shown in Figure 3B is an amplitude modulated wave. Modulation is from 0 to 100% with the center line of the modulating wave being at 50%. During the modulation of a carrier, two sideband frequencies are produced and are present in the combined signal of Figure 3B. In Figures 3C and 3D the lower and upper sideband frequencies are represented. With the frequency of the carrier f_C and the frequency of the sine wave modulation voltage f_M, the lower sideband is at a frequency of $f_C - f_M$, and the upper sideband is at $f_C + f_M$.

Furthermore, during the modulation process the phase angle between each sideband and the carrier is changing. This feature is best represented by using vectors as in Figure 3A. Therefore, using the peak amplitude of the carrier, and two sidebands as is indicated in Figures 3B, 3C and 3D as the proper vector lengths, we can show why the subcarrier of 3.58 mc must be suppressed. Note that the unmodulated carrier amplitude is the 50% point.

We can represent all the conditions at points A, B, C, D, E, F in Figure 3B by vector diagrams in Figures 4A, 4B, 4C, 4D, 4E, and 4F. When the two sidebands produced are exactly in phase with the carrier as in Figure 4A, then the amplitude of the modulated wave is twice the amplitude of the carrier since the sidebands each have an amplitude of one-half the carrier. Thus, OM represents the amplitude at that time. In Figure 3B, this amplitude is at point A when the amplitude is twice the carrier. In Figure 4B, at another time the vector I_1 and I_2 are no longer in phase with the carrier, hence I_1 and I_2 must be added to vector C by vector addition to give M. In Figure 3B, this amplitude is at point B. In Figure 4C, when the two vectors cancel each other, the amplitude of the carrier at that instant is the amplitude modulated wave at point C in Figure 3B. When the vector I_1 and I_2 go in a downward or negative direction, the resultant in Figure 4D is OM still pointing in the same upward or positive direction as before.

This is point D in Figure 3B. When I_1 and I_2 are pointing in exactly the opposite direction in Figure 4E, the resultant is 0, shown as point E in Figure 4B. When I_1 and I_2 swing past each other to complete one modulation cycle, the situation of Figure 4D is repeated, leaving a vector pointing positive. Point F in Figure 4B is this part of the cycle and the remaining cases are repeated to point G which is one complete modulating cycle later than point A.

Thus, no matter which part of the modulating cycle is chosen the resulting vector OM varies only between 0 and twice the amplitude of the carrier. Supposing I_1 and I_2 were the sidebands of the I signal. This would mean that two complementary colors as represented by Figures 4B and 4D would be at the same phase angle since their resultant OM is exactly in the same direction though of different amplitude. With the two complementary colors at the same luminance, they would necessarily have different saturations, even though they might have been at the same saturation originally.

In terms of Figure 3A, since the two carriers are not suppressed, all the hues must have angles between 0° and 90° since the amplitude of the resultant OM is never negative. This is definitely one limitation.

On the other hand, when the subcarrier is suppressed, the modulation results are like Figure 5.

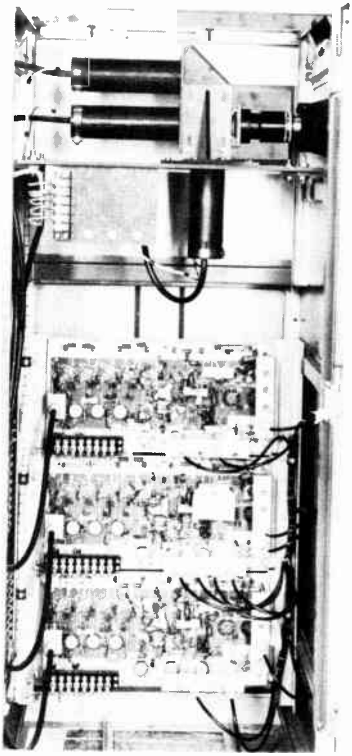

The light output from a color TV slide scanner is converted into electric signals through the use of the three multiplier phototubes shown mounted at the upper left.

Courtesy Allen B. Dumont Laboratories, Inc.

Now starting with an amplitude equal to the subcarrier in Figure 5A, the resultant of the sidebands as indicated by vector OM reduces to zero at 5C and then swings negative reaching a full negative value at 5E. Finally it starts reducing toward zero again as shown at 5F. With the signal able to reverse polarity as shown here, it is possible to combine I and Q signals which will produce a resultant in any phase of the full 360°. This makes for more simple receiver detection circuits.

A balanced modulator is shown in elementary form in Figure 6. Two radio-frequency amplifiers are used in a symmetrical circuit arrangement. The modulating or signal frequency E_m is impressed in push-pull on the grids of the two tubes through the input transformer T_1 that has the usual center-tapped secondary. On the other hand, a carrier frequency E_C, is applied through transformer T_3 in such a manner that both grids contain the same polarity of carrier signal voltage at the same instant.

This is the same as having the two grids in parallel insofar as the carrier signal is concerned, but in push-pull as far as the modulating signal is concerned.

When the instantaneous polarity of the voltage present in the two halves of the input transformer T_1 secondary are considered, the net a-c voltages applied to the grids of the two tubes at a given instant are:

$$\text{For } V_1 \quad E_{G1} = \frac{E_m}{2}$$

$$\text{For } V_2 \quad E_{G2} = \frac{-E_m}{2}$$

As a result of the modulation process, the tube plate current contains three frequencies; the 2 sidebands ($E_C + E_m$) and ($E_C - E_m$), and the modulating signal (E_m).

The carrier frequency is eliminated during operation in this type of circuit. To illustrate this, assume a given carrier E_C is applied to transformer T_3 of Figure 6 (no modulation is present at this time).

Since the two grids are in parallel insofar as carrier voltage is concerned, both grids vary in the same direction. When one grid becomes positive, the other becomes positive also and, as a result, this causes the plate current of each tube to increase.

However, since the plate currents of these two tubes are equal and opposite through the primary winding of transformer T_2, the magnetic field created by one current is canceled by the magnetic field created by the other. The net result of the transformer flux is zero and hence, no carrier voltage appears across the secondary winding of transformer T_2.

Although the circuit of Figure 6 is basic, it illustrates the principles used in all balanced modulators. A commercial circuit is shown in Figure 7. Tube V_1 is a phase splitter which provides signal voltages equal in amplitude but 180° out of phase to the control grids of tubes V_2 and V_3. A d-c restorer supplies the d-c component of the video signal on each modulator grid.

This assures that all the signal information contains a definite relationship to the blanking level which is used as a reference for background brightness in the televised scene.

Tube balancing is essential in a balanced modulator in order to completely suppress the carrier. This is accomplished by control R_5 in the cathode circuit of V_2 and V_3. Adjustment of this control is necessary only when the circuit is placed into operation for the first time or when one of the modulator tubes is replaced. As described later, bandpass filters are included in the output circuits of these modulator circuits to remove other unwanted frequencies.

Although here the subcarrier is not connected in series with the modulating signals as shown in Figure 6, the end results are the same. One phase of the color subcarrier frequency is applied to the suppressor grids of V_2 and V_3.

At this point, it should be understood that a separate balanced modulator circuit, such as is shown in Figure 7, is used for each I and Q. Also, the color subcarrier signals are applied to each circuit 90° apart or in quadrature. As mentioned before, the additional 33° phase shift is in-

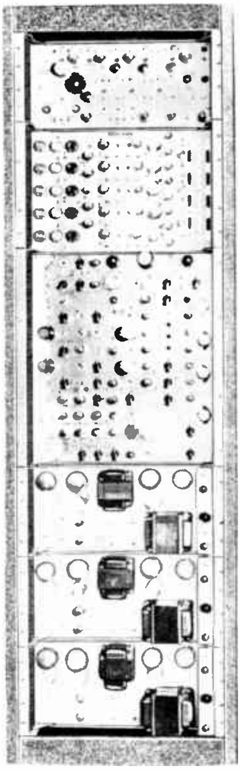

The large chassis in the center of the above unit matrixes the simultaneous red, blue, and green video signals applied from a camera to produce a composite color picture signal which can be used to modulate a television transmitter.

Courtesy Wickes Engineering and Construction Company cluded in the FCC specifications only to make an economical, narrow band receiver possible.

With no modulating signal (E_I' or E_Q') present on the control grids of V_2 and V_3 each tube conducts proportional to the signal voltage present in its suppressor grid circuit. As indicated in Figure 7, the two grids are connected to voltages 180° out of phase, and each tube conducts on alternate half cycles. However, since the plates of V_2 and V_3 are tied together and to a common resistive load R_{12}, the plate current of V_2 increases each time its suppressor grid is driven positive by the exciting voltage.

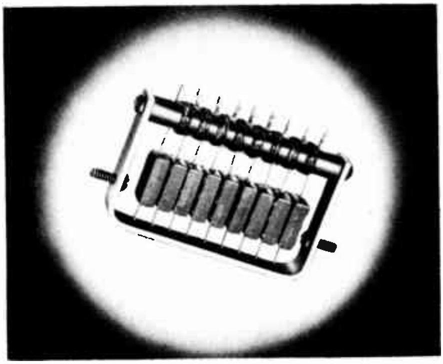

The length of signal delay is determined by the size of inductance and capacitance used in the construction of this delay line.

Courtesy Shallcross Mfg. Co.

In the meantime, the suppressor grid of V_3 is going negative and will cause its plate current to decrease by as much as the plate current of V_2 increases. With equal conduction of V_2 and V_3, no voltage (carrier component) exists across R_{12} and the carrier consequently is suppressed.

With a modulating signal applied, the information contained in the plate circuits of V_2 and V_3 will not be in balance. Since each tube conducts in accordance with the modulating signal present in its control grid circuit, a difference of r-f voltage is produced across R_{12}. V_2 and V_3 do not conduct an equal amount and this difference produces a voltage across R_{12}. This voltage is the sideband information.

Bandpass Filters

Bandpass Filters are located following the output of the balanced modulators to limit the sideband information to a specific band of frequencies. Since only the sideband information is desirable, the original modulating signal which appears together with the sideband information, must be trapped out.

To illustrate this, consider the Q channel whose signal information is confined to a bandwidth of .5 mc.

With a color subcarrier of approximately 3.6 mc, the balanced modulators each produce two sidebands of information and the original modulating signal. The

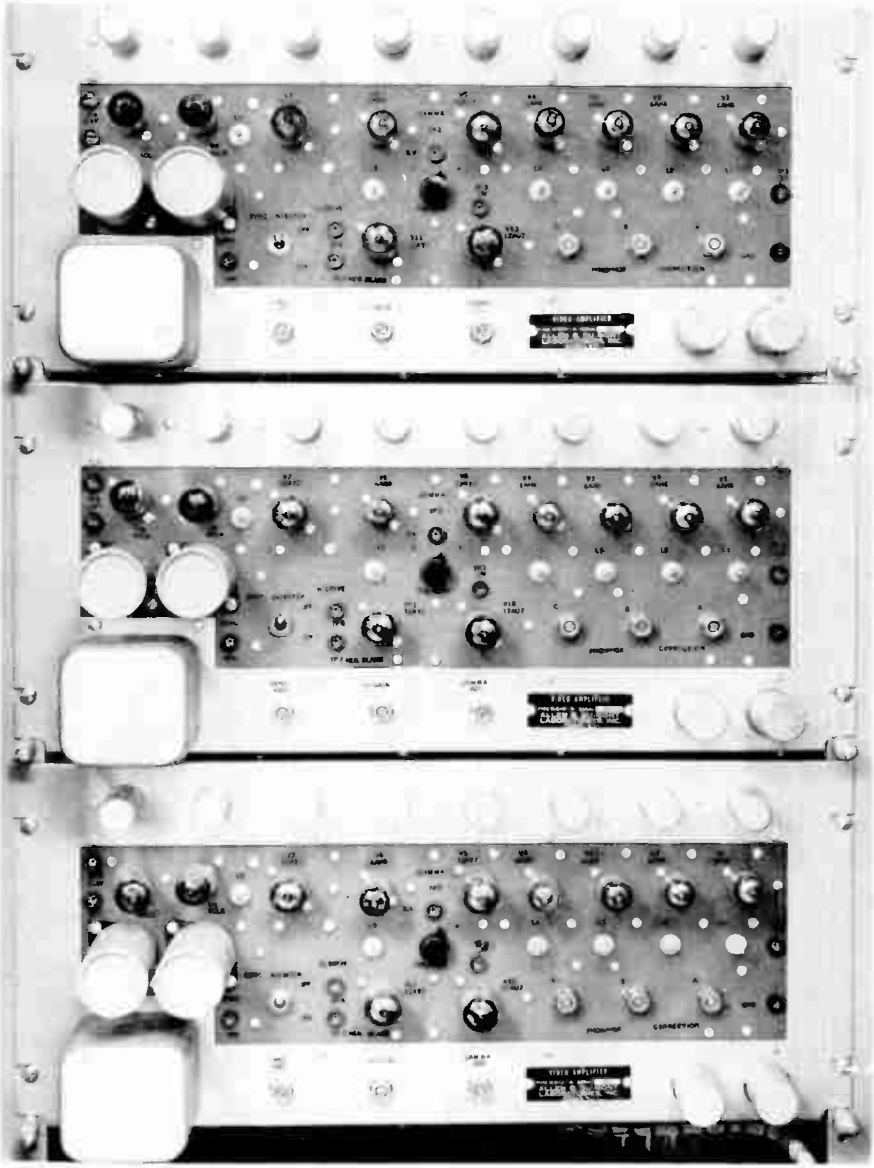

The bandwidths of these video amplifiers are approximately 8 mc. One complete amplifier for each color.

Courtesy Allen B. Dumont Laboratories, Inc.

color subcarrier is suppressed due to the characteristics of this type of circuit. Since the Q modulating signal is undesirable in the output, it must be eliminated.

Therefore, a bandpass filter is employed as shown in Figures 1 and 7 which passes only the sideband information. In this case, the frequencies passed in the Q channel vary from 3 to 4.2 mc and cause attenuation of the Q modulating signal since it falls close to the lower frequency limit (3 mc). The frequencies, 3 and 4.2 mc, represent the sum and difference frequencies in the above illustration.

The information from the I balanced modulator has sidebands which extend 1.3 mc on both sides of the color subcarrier signal. However, as indicated in Figure 8, the upper sideband information of the I signal would extend beyond the allotted bandwidth of the transmitted signal and therefore, a portion of its upper sideband must be blocked. This attenuation takes place in the 2 to 4.2 mc bandpass filter following the I balanced modulator and the resultant I signal is transmitted as vestigial sideband information.

The outputs from the I and Q bandpass filters are combined to form the chrominance signal as represented by the vector arrangement in Figure 3A. The Q signal is shown shifted 33° from the phase reference axis whereas the I signal is in quadrature with the Q signal because of the phase displacement between the two color subcarriers.

As shown in Figure 1, this resultant chrominance signal is combined then with the output from the luminance channel to form the complete picture signal.

Delay Networks

Any deviation between the arrival time of the three signals affects the horizontal resolution and hue of the received image at the receiver. In passing through their respective bandpass filters, each signal experiences a time delay. This delay is proportional to the square root of the LC network comprising its filter. This relationship is shown in Equation (1).

$$T_d = \sqrt{LC} \qquad (1)$$

L = inductance in henrys

C = capacitance in farads

T_d = time delay in seconds.

The use of this equation can be illustrated by comparing the I and Q signals prior to their application to the balanced modulators. For example, since the Q signal has its cutoff frequency limited to .5 mc, it is delayed an amount proportional to the LC network comprising its filter. In contrast, the low pass filter in the I chan-

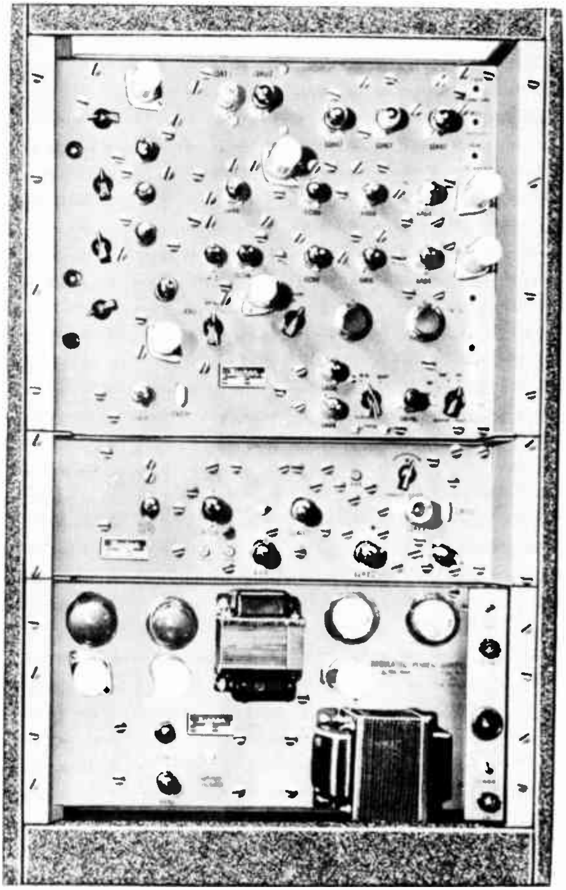

Used in studio work this unit displays the chrominance components of standard color bar signals in vector form on the scope screen shown at the lower left.

Courtesy Wickes Engineering and Construction Company

nel has a cutoff frequency of 1.3 mc and as indicated by Equation (2) the (LC) term must reduce in order to allow a higher cutoff frequency.

$$f_c = \frac{1}{\pi\sqrt{LC}} \qquad (2)$$

Where:

f_c = cutoff frequency of filter
π = constant.

That is, as the cutoff frequency f_c increases the value of LC must decrease as a result of their mathematical relationship. By substituting this lower LC term in Equation (1) it is seen that the time delay of the I channel is less in comparison to that of the Q signal. Therefore, in order that both signals be applied to the balanced modulators at the same instant, the I signal has a delay line inserted in series with its signal path.

The amount of delay is determined by the time delay difference between the I and Q low pass filters. For example, assume the Q low pass filter has a delay of 3 microseconds while that of the I filter is 1.5 microseconds. The difference, (3 – 1.5 or 1.5 microseconds) between these two delays, determines the added delay required in the I channel in order to equalize the arrival time of these two signals. If a delay cable which has a .5 microsecond delay per foot is used, three feet are necessary to provide the required delay.

This same principle is repeated in the Y channel. Since the Q channel has the narrowest bandwidth, the signal through it is delayed more than the signals through the I and Y channels. Therefore, as in the previous case, a proper delay must be inserted in the Y channel so that it will arrive at the transmitter at the same time.

THE COLOR RECEIVER

Color transmission contains luminance, chrominance blanking, and sync signal information necessary for the proper reproduction of a televised image on either a color or monochrome television receiver. Due to the NTSC compatibility requirements, this transmitted signal must produce a monochrome version of the color image on a black and white receiver of quality equal to or superior to normal monochrome reception without any modifications.

The transmitted color picture signal is similar to the one used in monochrome broadcasts in that it contains the same frequency allocations; that is, channel width, location and spacing of the sound and picture carrier and their sidebands. Other similarities are that it contains the same scanning methods, the same synchronizing signals, and the same modulation polarity as used in monochrome reception.

As specified in an earlier lesson, the bandwidth of the chrominance and luminance signals determines three ranges of picture detail.

In the first range, fine picture details, corresponding to video frequencies above 1.3 mc, are reproduced in monochrome (black and white). The eye cannot distinguish colors in the picture details until the video frequencies are reduced down to 1 megacycle.

On the second range, areas corresponding to video frequencies, between .5 mc and 1.3 mc reproduce colors in a two-color system. The colors involved range from an orange-red to a green-blue. Reference to the color triangle of Figure 2 illustrates this range of colors.

In a third frequency range, still larger areas, corresponding to video frequencies below .5 mc, reproduce the full three color system.

Receivers capable of reproducing these three frequency ranges are considered as WIDE-BAND CHROMINANCE receivers. These receivers, have sidebands as shown in Figure 8. Note that the Q signal has double sidebands while the I signal is like the luminance signal. That is, it contains the lower sideband and only a portion of the upper. So long as the band pass filters of a receiver do not cutoff the video frequencies below .5 mc, the receiver will reproduce the described 3 color ranges without encountering any difficulty.

For simplicity, a receiver may have bandpass filters reject any color video frequencies above .5 mc and thus the I and Q signals will each have double sidebands limited to .5 mc. In receivers of this type, color information for picture detail which exists in the frequency range between .5 mc to 1.3 mc is lost. Units of this type are known as NARROW-BAND CHROMINANCE receivers.

Picture I-F

The picture i-f bandwidth in color receivers is increased to about 4.2 mc in order to accommodate the newly added color information. Since this color information is produced by a subcarrier close to the sound carrier frequency, care must be exercised to prevent cross modulation between these two signals. Interference of this type takes the form of a 920 kc beat note that produces a cross hatch pattern on the viewing screen.

Cross modulation is minimized in several ways in a color receiver. (1) Special networks are employed which attenuate the sound i-f carrier to a very low level. (2) Separate second detectors are used; and (3) The beat note between the color subcarrier and the 4.5 mc sound is an odd harmonic of the half line frequency. Therefore, dots normally produced by this type of interference cancel out in alternate frames of the picture.

To assure this cancellation, the deviation tolerance of the 4.5 mc sound carrier has been reduced from the former 5,000 cps to 1,000 cps. Since the 4.5 mc sound signal is still dependent upon the difference frequency between the picture and sound carrier, this tighter restriction conforms to the compatibility requirements.

Typical networks used for sound attenuation are shown in Figures 9 and 10. In Figure 9, the output signal from the tuner is fed to a LINK COUPLED, BRIDGED-T NETWORK which in turn is tuned to reject the sound carrier. With the proper setting of R_2, attenuation of 30 db is readily obtained.

Frequencies other than the 41.25 mc sound carrier are coupled through C_3 to the grid of the first picture i-f amplifier. Coil L_4 is tuned to peak up the frequencies immediately following the attenuated sound carrier. This allows complete passage of the color sideband information.

COLOR TV—Picture Area 85 sq. in.
Power Consumption 575 watts

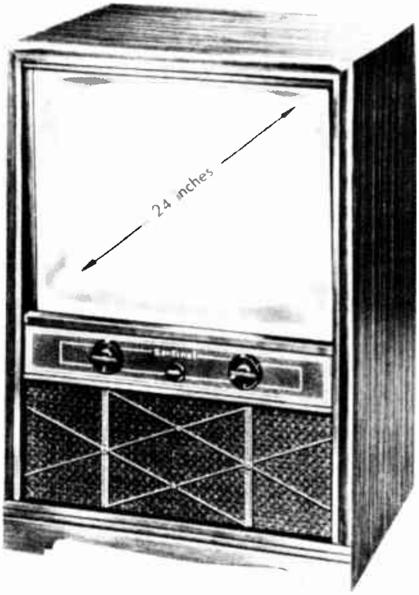

BLACK and WHITE TV—Picture 355 sq. in.
Power Consumption 250 watts

The increased power consumption required for the smaller color receiver indicates that a number of extra circuits are required.

Courtesy Sentinel Radio Corporation

A wide bandwidth is obtained through the use of a bandpass filter located in the plate circuit of this first picture i-f amplifier. Coil L_5 provides the desired bandwidth together with the aid of the series resonant rejection traps tuned to the adjacent picture i-f (39.75 mc) and sound i-f (47.25 mc) signals.

Another system used for early sound attenuation is shown in Figure 10. Here, the output from the tuner is applied directly to the grid of the first picture i-f amplifier through a series tuned 41.4 mc circuit. This circuit is used to peak up the video frequencies in this region because they contain the color sideband information.

Therefore, upon adjustment of the 41.25 mc absorption sound trap located in the plate circuit of the first i-f amplifier, the band of frequencies immediately following this lower sound carrier are not attenuated by any appreciable degree.

The remaining i-f stages in both color receivers are transformer-coupled, stagger-tuned stages in order to obtain the proper wave shape and response.

As in the case of monochrome receivers, the sound signal is kept to some minimum as compared to the picture carrier so as to produce a difference signal of 4.5 mc with a minimum of amplitude variations. By maintaining the sound i-f carrier at this low level, the resultant 4.5 mc signal has the original FM modulation of the transmitted sound and any small amplitude variations produced are readily suppressed by the FM detector.

Sound Channel

A separate detector is used to separate the sound from the transmitted picture signal information in order to further prevent a heterodyne between the sound and chrominance signals. In Figure 11 sound take off is shown to occur after the last picture i-f amplifier. In this manner, trap circuits may be employed following this take off point to further minimize the possibility of producing cross modulation between the sound and chrominance subcarrier.

One arrangement for sound detection is shown by the partial diagram in Figure 12. Here, the sound signal is coupled through C_1 and detected by a crystal diode S_1. The output is fed then to a tuned circuit (L_1C_2) which is resonant to the 4.5 mc difference frequency. Beyond this point, the 4.5 mc signal is amplified and converted to audio in the conventional manner. Even though separate sound detection is used in color receivers, the sound circuit still retains its intercarrier characteristics. That is, the effect of any frequency drift in the receiver local oscillator has little or no effect on the sound tuning. It is still dependent upon the difference in frequency between the transmitted sound and picture carriers.

A bridged-T, bandpass filter circuit is located between the plate circuit of this last picture i-f amplifier and the video detector. The bridged-T trap is tuned to reject the 41.25 mc sound carrier thus minimizing its reaction with the chrominance signal. The capacitance formed between L_5 and ground helps to maintain the broad bandpass provided by this type of filter.

Luminance Channel

After detection, the color picture signal is fed to a video amplifier where it is amplified and separated into proper channels. As shown in the wide band chrominance receiver of Figure 13A, the luminance signal is coupled through a 1 microsecond delay line and amplified by a second video amplifier.

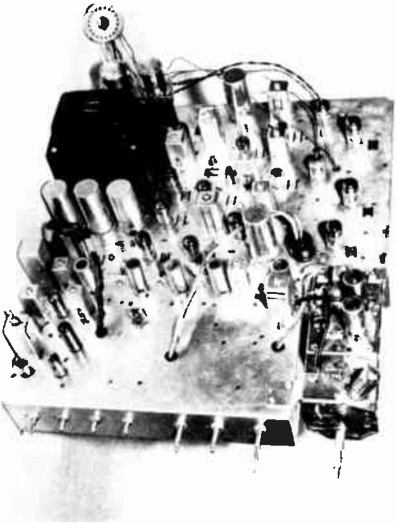

A top view of the signal circuits in a color television receiver.

Courtesy Sentinel Radio Corporation

The delay line serves to delay the luminance signal so that its arrival time at the matrix is matched with the I and Q color signals. A deviation greater than .05 microseconds between the arrival time of any of the three signals (I, Y, or Q) results in poor color reproduction; poor horizontal resolution, and incorrect hues and saturation of the televised image.

The second video amplifier builds up the luminance signal to an amplitude sufficient for application to the matrix and color picture tube. Frequently, the response of the last video amplifier in monochrome receivers extends beyond 4.5 mc in order to accommodate the sound difference frequency. However, in color receivers, attenuation of the 3.6 mc color subcarrier is desired in order to minimize the interference it exerts on the viewed image. Therefore, the response of the video amplifiers after the chrominance signal is removed usually is slightly less than 3.6 mc.

Since the luminance signal contains the same signal information as the present signal used in monochrome transmission, it requires no further consideration at this time.

Chrominance Channel

In Figure 13A the chrominance signal is obtained by passing the detected color picture signal through a bandpass amplifier and

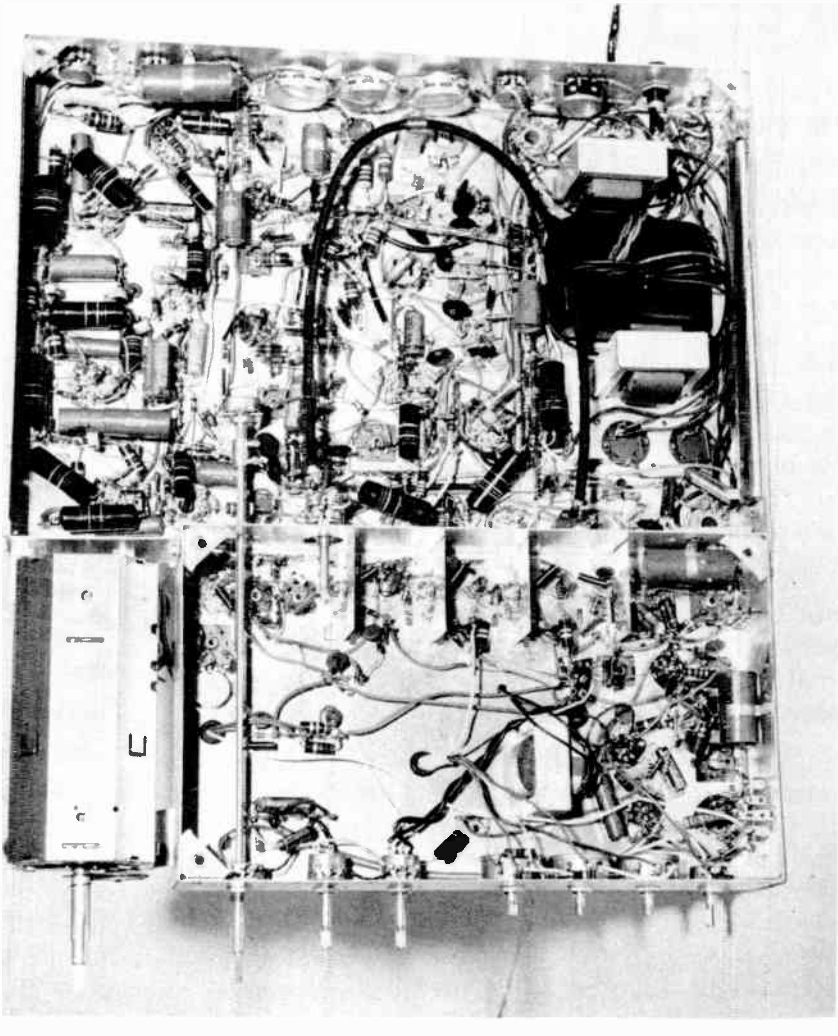

An under chassis view of the color TV receiver shown in the previous illustration. Note the delay line bent into a "U" shape.

Courtesy Sentinel Radio Corporation

filter. The bandpass filter is designed to pass only those frequencies containing the color sideband information; namely, frequencies extending from 2 to 5 mc. A curve representative of this bandpass filter is shown in Figure 14A.

To illustrate the features of this bandpass filter, refer to the circuit of Figure 15. The choice of the L and C components used in the construction of the resonant circuits (L_1C_1) and (L_2C_2) determine the frequency limits of the filter.

For instance, at frequencies below 2 mc, the bandpass filter takes on the characteristics of a high pass filter and passes only those frequencies above 2 mc as shown by the bandpass curve of Figure 14A. In a similar manner, this filter possesses low pass characteristics at the upper frequency limit (5 mc); that is, it passes all frequencies up to 5 mc while attenuating all others.

Used in this manner, the combination of the shunt and series arm passes only those frequencies contained in the chrominance signal.

As a low terminating impedance at the output of this filter, the 500 ohm chroma control R_1 has two main advantages. (1) It prevents self biasing of the I and Q demodulator stages and (2) It serves to minimize subcarrier feedback between the two demodulators.

Synchronous Demodulation

Color data, carried by the chrominance signal, contains the hue and saturation of the televised scene. As mentioned earlier, these signals were transmitted in quadrature in order to simplify separation and detection at the receiver.

To recover the two sets of color information independently, synchronous demodulation is necessary. In this process, the modulated information is heterodyned with a locally generated sine wave having the same frequency and phase as the carrier from which the desired modulation was generated.

As shown in Figure 13A, a cw signal, generated at the color subcarrier frequency, is applied to the I and Q demodulators at a given phase. The quadrature amplifier provides the 90° phase between the two 3.579545 mc signals the same manner in which the I and Q subcarrier signals were shifted at the transmitter.

For the narrow band chrominance demodulator, Figure 13B shows those circuits that differ from those of Figure 13A. Note that the R′-Y′ and B′-Y′ signals are produced directly at the demodulators. Again a local 3.58 mc oscillator provides the necessary subcarrier frequency. A quadrature network phase shifts the sin ωt to a cos ωt, thus providing an exact 90° displacement of two subcarriers. Since there is no 33° phase shift, R′-Y′ and B′-Y′ signals instead of I and Q are produced by the demodulators.

Amplitude demodulators detect the variation in amplitude which results from all signals received. In ordinary sound broadcasts, the sidebands are always in correct phase with the transmitted carrier to produce an amplitude variation. However, if the carrier had been suppressed, a new carrier must be inserted at the receiver. Only those sidebands, or vector components of the sidebands, in phase with the inserted carrier produce amplitude variations of the signal.

Notice the wide variation in total amplitude OM between Figures 16A and 16B when sidebands I_1 and I_2 produce a sum in phase with the carrier. Using the same sidebands but with the carrier rotated 90° note how little variation in OM is produced between Figures 16C and 16D. What little variation does remain occurs at twice the modulating frequency and therefore, for the most part, can be filtered out later. This applies equally to narrow as well as wide band chrominance receivers.

Taking advantage of this principle, two chroma detectors are used but the carrier frequencies inserted into each is 90° out of phase with the other. With the entire chroma signal applied to both circuits, only those sidebands in phase with the carrier produce total signal amplitude variation which can be detected. As a result one circuit detects only the E_Q' or E_B'-E_Y' sidebands, the other reproduces only the E_I' or E_R'-E_Y' signal.

A commercial wideband synchronous demodulator circuit is shown in Figure 17. As indicated, a 3.579545 mc signal of the phase sin $(\omega t + 33°)$ is applied to the suppressor grid of the Q demodulator. This signal has the same phase as the subcarrier modulated by the Q signal at the transmitter. In like manner, the phase of the cw signal applied to the I demodulator is $\cos(\omega t + 33°)$ and this is in step with the color subcarrier which was modulated by the I signal at the transmitter.

This 3.58 mc cw signal, is approximately 25 volts in amplitude and is sufficient to control the conduction of the tube. Hence V_1 conducts on each positive half cycle of the applied cw signal but cuts off during each negative alternation. This action is similar to amplitude detectors described in earlier lessons.

The chrominance signal is applied to the control grid of the Q demodulator where it heterodynes with the properly phased 3.579545 mc signal present in the suppressor grid circuit. The result of this heterodyne action produces the Q signal information plus a few undesirable double frequency components.

This output signal is then fed to a low pass filter consisting of

L_1, C_1, and L_2. Here, most of the double frequency components are eliminated leaving only the desirable Q signal in the frequency range extending from 0 to .5 mc. The response provided by this low pass filter is shown in Figure 14B.

Considerable care must be exercised to maintain the receiver oscillator in correct phase with the color subcarrier. Failure to do so produces poor color separation. In fact, as little as a 5° phase shift degrades the color.

Shown in Figure 18 are the phase detectors used in a narrow band chrominance receiver. Essentially each diode pair V_2 or V_3 acts like an ordinary sound phase detector found in audio sections of black and white TV receivers.

With just the oscillator 3.58 signal in V_{2A} and V_{2B}, each tube conducts equally well. Voltage at the junction of R_4 and R_5 is zero since a positive voltage of R_4 cancels the negative voltage across R_5. L_1, L_2, and C_9 form a series resonant circuit for any 3.58 mc left in the output. L_2 is tuned exactly to the subcarrier since it would produce undesired colors.

When a color burst and chroma signal are applied on the cathode follower V_1 grid through transformer T_1, tubes V_{2A} and V_{2B} do not conduct equally. Figure 16 applies in the same way here as for Figure 13A. With the color burst from the transmitted signal entering in phase which differs from the subcarrier coming from the quadrature network, there is an output voltage at the junction of R_{24} and R_{25}. This is the $E_R' - E_Y'$ voltage vector shown in Figure 3A.

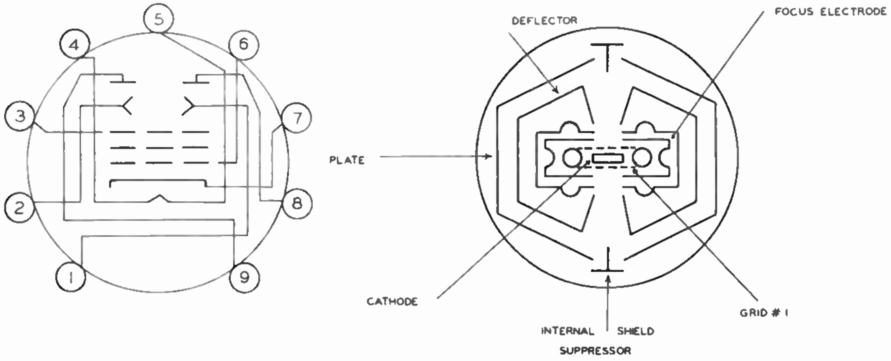

Schematic symbol and cross-section view of the 6AR8 tube which was designed for synchronous detectors. Notice the unusual arrangement of the electrodes.

Phase detector V_3 has a similar action and its output is $E_B' - E_Y'$ which again may be found in Figure 3A.

In comparing the response of the bandpass and the Q channel low pass filters in Figure 14A and 14B, there is no frequency overlap between the two curves. Any overlap would result in direct feed of the luminance signal components into the chrominance channel causing cross-talk. Interference of this type would occur as incorrect reproduction of the edges in the televised scene.

Likewise, in the I demodulator, the cw signal is shifted to the phase cos ($\omega t + 33°$) and the I signal information thus is extracted from the chrominance signal. The output from the I demodulator is fed also to a low pass filter where the double frequency components contained in the signal are eliminated.

In this case, however, the I signal contains the finer color detail information and therefore requires a wider bandpass. As shown in Figure 14C, its frequency range extends from 0 to 1.5 mc. To avoid crosstalk, the high frequency end of the I response curve is attentuated so that there is, again, no overlap between it and the response curve of the bandpass filter curve of Figure 14A.

In the narrow band receive
the amplifier response limits th
band of frequencies passed to 0.
mc. It is only from 0 to 0.5 m
that the two signals have the re
lationship pictured in Figure 3A
Therefore, if frequencies abov
0.5 mc were demodulated th
wrong color difference voltage
would be produced.

Delay Lines

Since the bandwidth of the
channel is greater than the Q,
delay in the I channel is neces
sary so as to equalize the arriva
time of these two color signals a
the matrix in a wideband chro
minance receiver.

Regular transmission lines ma
be inserted in series with the sig
nal to be delayed. However, whe
long time delays are necessary
the length of transmission lin
becomes excessive and presents
space and mounting problem
Therefore, to accomplish the sam
delay in a minimum space, arti
ficial lines are used. These line
contain lumped elements of in
ductance, capacitance, and resist
ance and have characteristic
similar to actual transmissio
lines.

A typical delay line used i
color receivers is shown in Figur
19. The portions indicated by A
B, and C are called sections an
each section delays the signal b

an amount equal to $\sqrt{L_1C_1}$; where

L_1 = the inductance in henrys

C_1 = the capacitance in farads

For a delay using "n" number of sections, the time delay encountered by the line is,

$$\text{Time delay } (t_d) = n\sqrt{L_1C_1}$$

When an artificial line is terminated in its characteristic impedance "Z_0", it functions as a low pass filter and passes frequencies from zero to a cut-off frequency determined by the inductance and capacitance used in the line construction. Used in this manner, an artificial delay line serves a dual purpose. It retards and band limits the applied signal.

The length of delay required in the I channel is .5 microseconds while the luminance channel, which contains the widest bandwidth, requires about 1 microsecond of delay.

The output from the Q low pass filter is applied to a phase splitter from which a positive and negative output is obtained for application to the matrix network.

The output from the I low pass filter is applied to an amplifier which produces a signal equivalent in amplitude to the Q signal. Since both sidebands of the Q signal were transmitted, its amplitude is flat throughout the Q channel. However, the I signal was transmitted with one of its sidebands suppressed in order to conform to the FCC channel spacing requirements.

Therefore, this amplifier is used to compensate for the signal amplitude variations that result.

The output from this I amplifier is applied to a phase inverter whose purpose is to obtain two polarities of signal voltage. The output from the I amplifier provides the positive signal while the output of the phase inverter produces a negative signal.

The Matrix

The four output voltages, produced by the I and Q channels, are added in a resistive network called the matrix. One such circuit is shown in Figure 20A. Here they combine with the luminance (Y) signal and develop voltages in such proportions that they provide the proper input signal for each color amplifier. The values indicated at the input to the matrix reveal the ratios of the I, Q, and Y signals necessary for good color reproduction.

The chosen percentages of each of the three signals Y, I and Q are required to reproduce the same colors originally present in the transmitter matrix from the color TV camera. The table in Figure 20B lists the various values of each required signal, with the minus voltages indicating a phase reversal of 180° from the plus voltages.

The results of these mixed proportions are amplified to obtain E_G', E_B', and E_R' and in the matrix to the proper level for application to the grids of the color picture tube. Since the red phosphor requires more drive than the blue and green phosphors, the red amplifier is operated at maximum gain. Both the blue and green amplifiers have gain controls which reduce their respective signals to equalize the light output for the three colors.

Color Synchronization

As indicated earlier, the color signal consists of two sets of information in quadrature and in order to demodulate this information, a sample signal, of the same phase and frequency as the color subcarrier generated at the transmitter, was required. Therefore, to accomplish this action a color burst signal, the frequency of which is equal to the color subcarrier at the transmitter, is transmitted along with the complete picture signal. This color burst is at least 8 cycles at 3.579545 mc located on the "back porch" of the horizontal blanking pulse as shown in Figure 21.

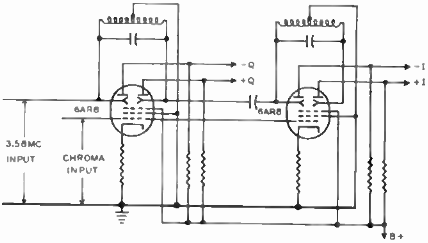

Schematic diagram of two 6AR8 tubes being used as synchronous detectors in a color television receiver.

A trap circuit, tuned to this burst frequency, is located in the output of the first video amplifier. From here, it is applied to a burst amplifier which under normal conditions is held cut off during the video portion of the transmitted picture signal. To minimize spurious conduction of this amplifier, a horizontal pulse is used to trigger the burst amplifier so that it conducts only during the presence of a color burst signal. By using an AFC circuit to control the receiver 3.579545 mc sample oscillator, the color burst signal serves as a reference when applied to the phase detector to which the receiver sample oscillator is compared.

As shown in Figure 22A, any correction voltage developed as a result of a frequency difference between these two signals is applied to a reactance tube. A positive correction voltage results in a reduction of the receiver color oscillator frequency whereas a negative correction voltage naturally has the opposite effect. The sample oscillator is held well within 5° of the original color subcarrier frequency in order to maintain the proper hue of the televised image.

The color phasing amplifier, used in wideband receivers only, is located between the sample oscillator and phase detectors. This stage permits the carriers generated for the I and Q signals to be phase shifted 33° from the phase reference axis as specified by the FCC.

Once the 3.579545 mc cw signal has been generated, it is fed to a quadrature amplifier whose function is to shift the input signal by 90°. A circuit providing this action is shown in Figure 23A. Here, the arrangement of the tuned transformer in the plate circuit of V_2 is such that the primary C_5L_3 acts inductive. Due to this condition, instead of obtaining a normal 180° phase inversion between the input and output signals applied to V_2, the inductive primary causes the tube current to lag by approximately 90°.

Since the secondary voltage is dependent upon the primary current, this induced voltage also is shifted approximately 90°. This fulfills the requirements of producing two 3.579545 mc signals in quadrature for the I and Q demodulation stages.

One signal, $\sin(\omega t + 33^\circ)$, is taken directly from the sample oscillator and applied to the Q demodulator. The quadrature signal, $\cos(\omega t + 33^\circ)$, is the oscillator output phase shifted 90° and then applied to the I demodulator.

During transmission periods wherein no color signal is transmitted, a circuit called the "color killer" disables the chrominance channel in a wideband receiver. Its purpose is to prevent video information from passing through the bandpass amplifier and subsequent circuits. In a narrow band receiver the frequency response of the amplifier limits this possibility

Any signal through these circuits during monochrome transmission would result in improper shading of the detail information because of the possibility of spurious color mixtures combining with the black and white signal at the picture tube.

With a color burst signal present, as during color transmission, the phase detectors conduct and develop a negative voltage which is applied to the color killer tube. This voltage is sufficient to render the color circuit inoperative and thus permits proper color reproduction.

During monochrome broadcasts, the absence of a color burst removes the negative bias from the color killer tube and thus permits it to conduct. This conduction causes a large negative voltage to be developed in the grid circuit of the bandpass amplifier and blocks the passage of the chrominance signal to the I and Q demodulators.

The circuits described in this lesson apply to the wide-band chrominance receivers where all three colors are reproduced up to .5 mc, two colors from .5 mc to 1.3 mc and black and white for the details represented by 1.3 to 4.2 mc.

Although not quite the same quality, a very satisfactory picture can be produced by a much simpler, narrowband chrominance receiver whose oscillator and quadrature network are shown in Figure 22B. In this receiver the circuits are very similar through the chroma detectors except that filters cut off both the I and Q signals at .5 mc.

Under this condition if the oscillator signal applied to the chroma detectors is not shifted by 33° and 123° from the phase reference for the Q and I channels but in phase and 90° ahead, two color differecne signals, R′−Y′ and B′−Y′, are produced directly by the Q and I detectors. Since proper proportions of these two signals added together and phase inverted give a G′−Y′ signal, all three signals can be applied to the picture tube gun cathode without the need of an elaborate matrix.

A tuned-plate oscillator in Figure 23B provides the 3.579545 mc subcarrier to the color phase amplifier which is the buffer between the oscillator and the quadrature network. The slug adjusted coil L_1 is tapped at the proper part without disturbing the oscillator and matching impedance into the grid of V_2. R_3 and C_3 provide fixed cathode bias while L_2 peaks the amplifier response about 3.58 mc. C_4 and R_4 are a decoupling network preventing interaction with another stage through the B+.

The entire network within the dotted line is housed in a subassembly and is the quadrature network. L_3 is tapped for the same reasons as L_1. C_6, L_3, and C_8 are parallel resonant at 3.58 mc and produce a cos ωt output. C_7, L_4, C_9 form a series resonant circuit at 3.58 mc and provide a sin ωt due to the point since the output is shifted 90° by C_7. Capacitor C_9 is also an r-f bypass across R_6 which is the blue background control.

Then by applying the monochrome or Y′ signal to all three gun cathodes, the proper colors are on each tube gun. That is, with R′−Y′ on the grid and Y′ on the cathode, the total voltage applied between cathode and grid is R′−Y′+Y′ or R′ which is the desired voltage. The same holds true for the other two guns.

The disadvantage is that three color reproduction goes to .5 mc and black and white from .5 to 4 mc. No two color system exists between .5 and 1.3 mc. However, it does provide an economical alternative where the slight impairment of the picture quality is very acceptable.

Although mentioned only briefly in the last page or so, the color synchronization circuits are very important. Good color can only be obtained when the local oscillator is held in proper phase. However, to do this requires automatic phase control circuits. These circuits are described in the next lesson.

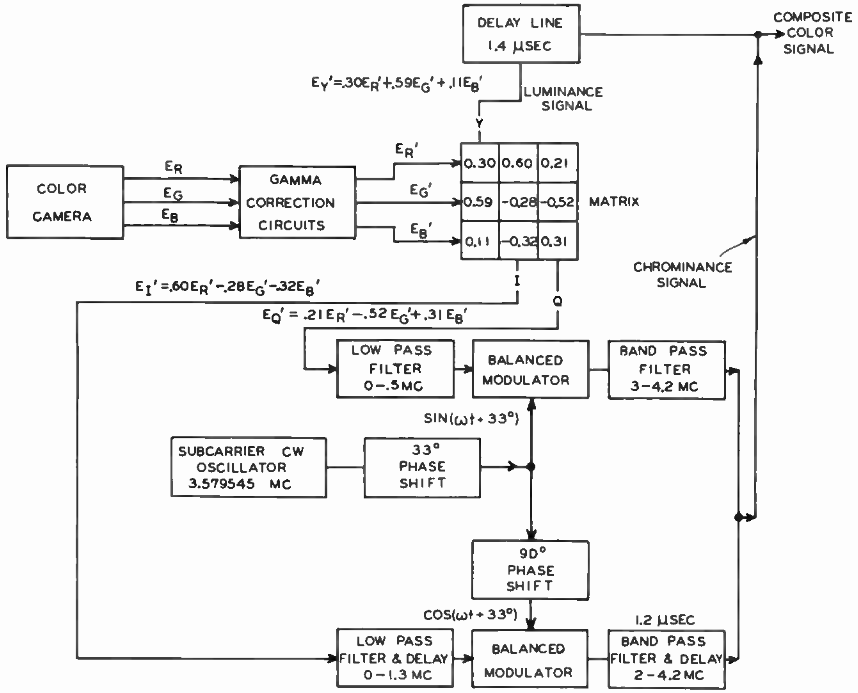

FIGURE 1

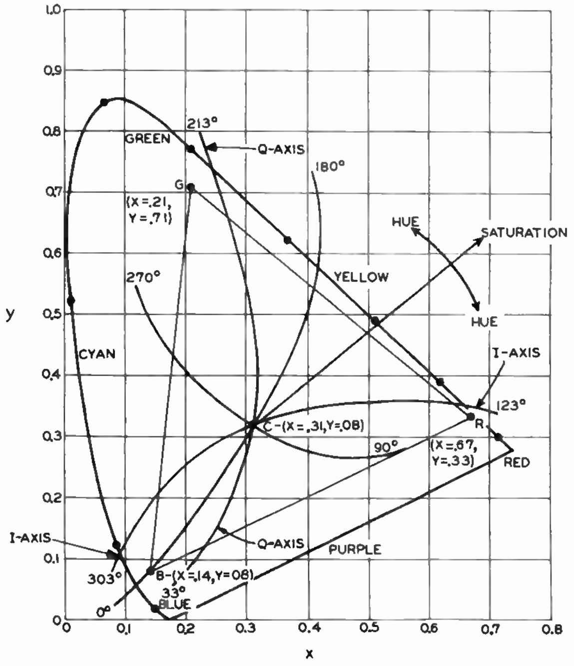

FIGURE 2

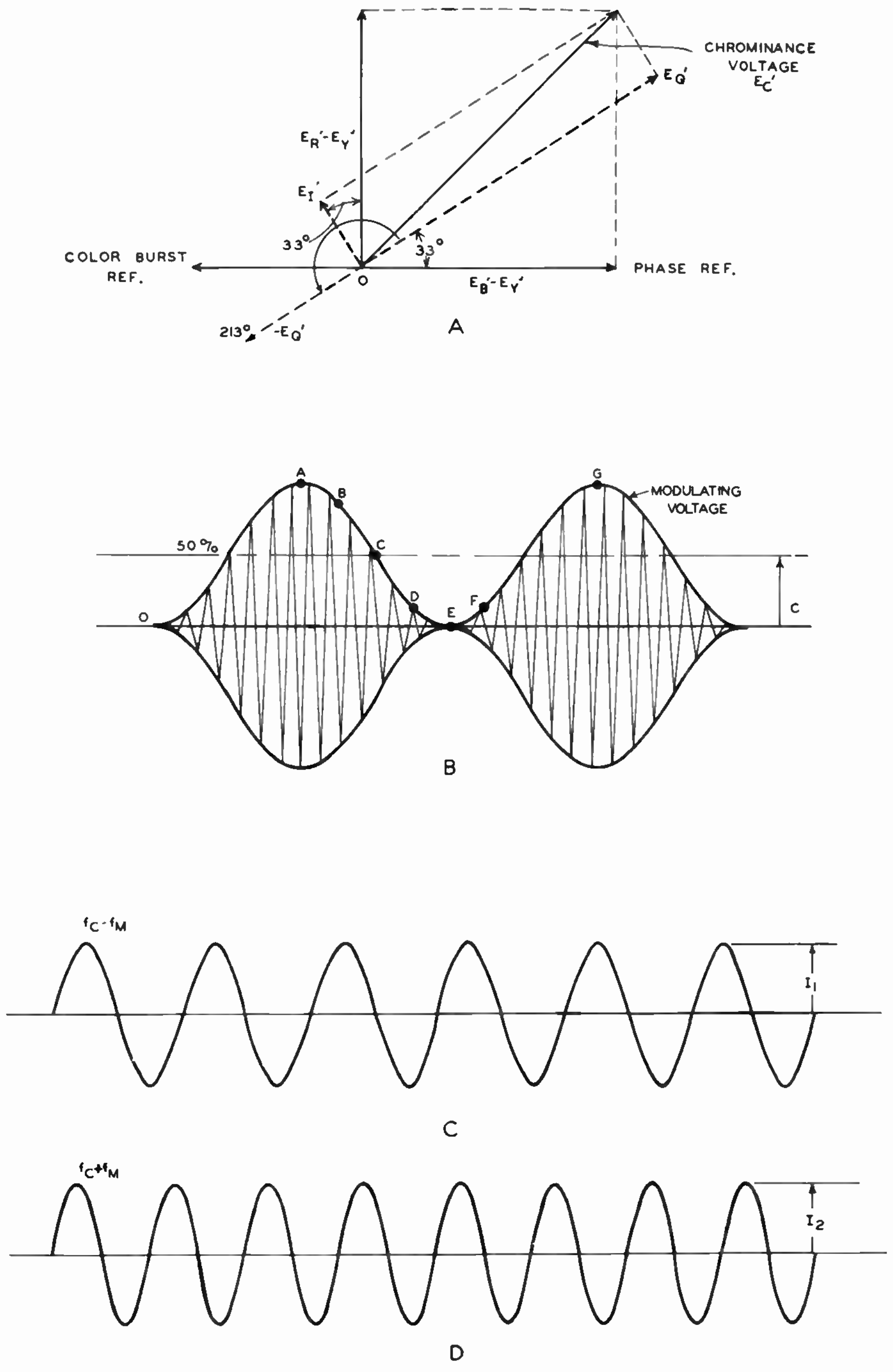

FIGURE 3

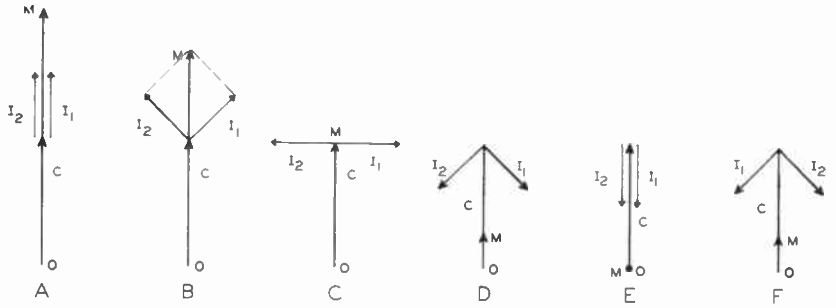

FIGURE 4

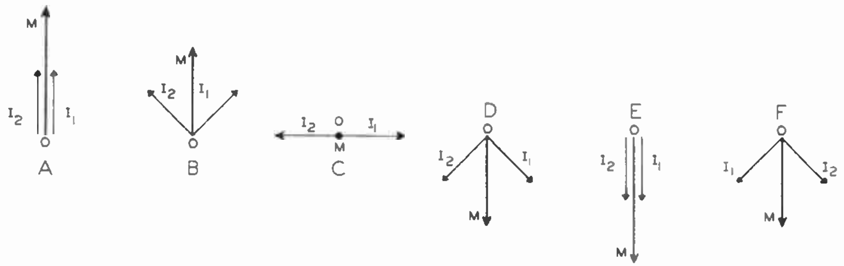

FIGURE 5

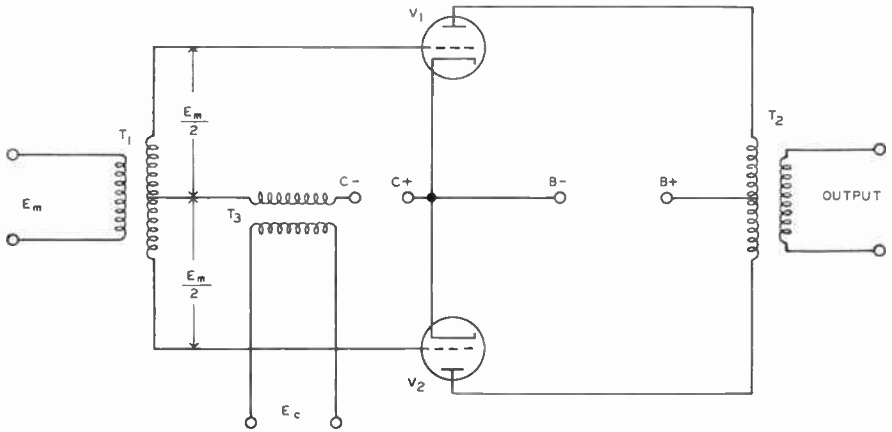

FIGURE 6

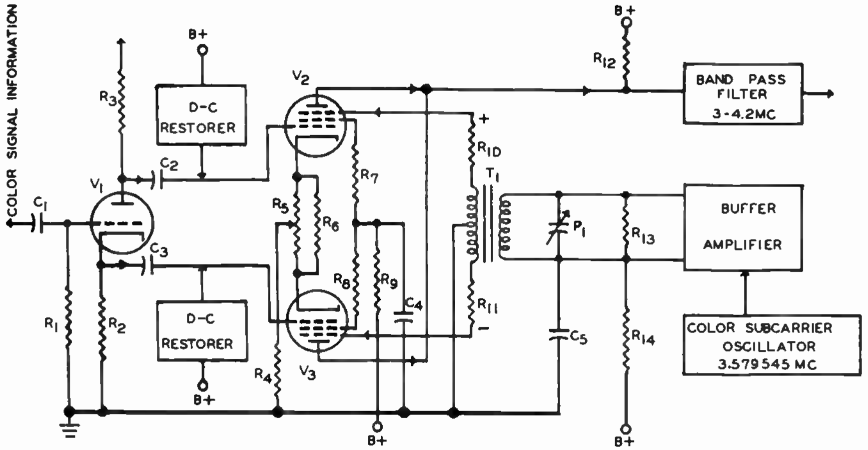

FIGURE 7

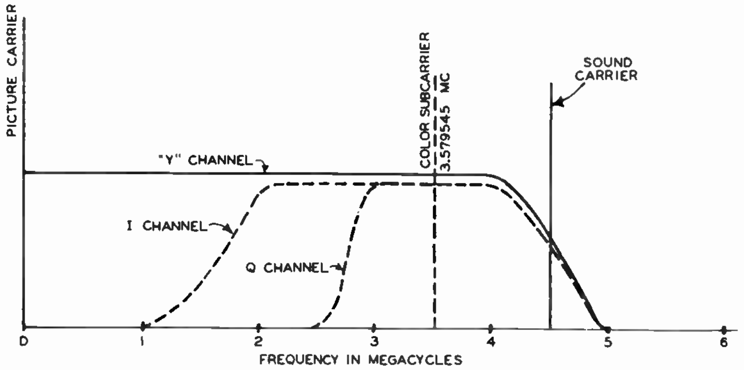

FIGURE 8

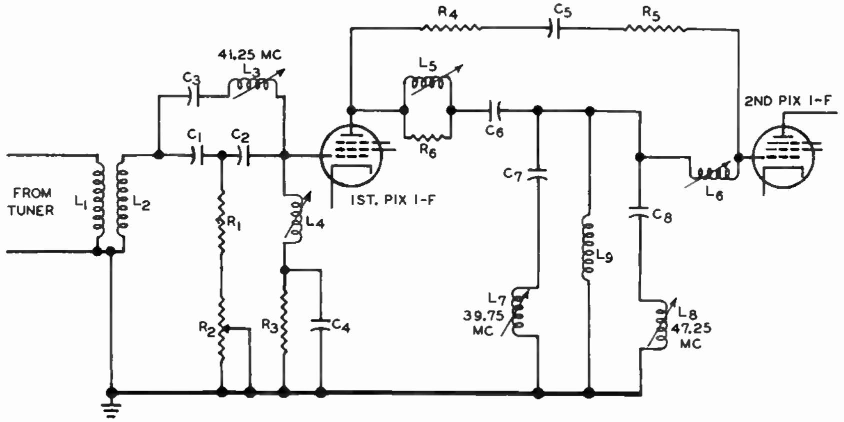

FIGURE 9

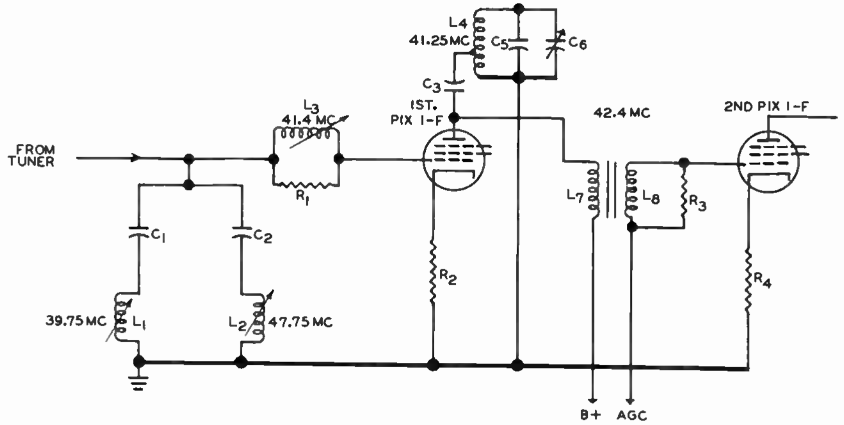

FIGURE 10

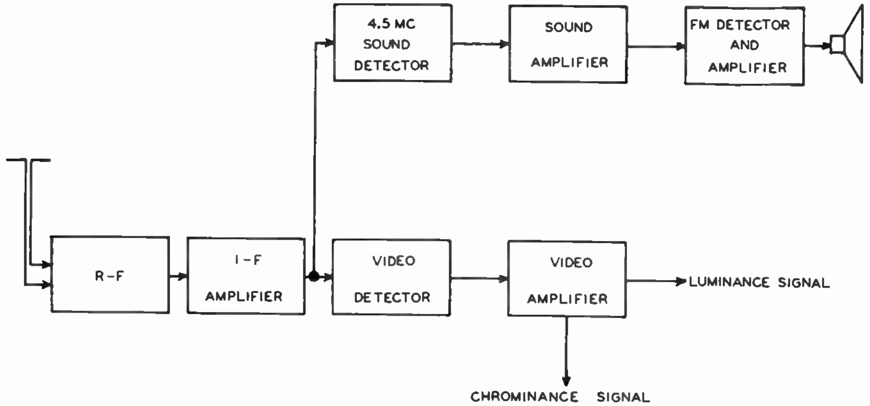

FIGURE 11

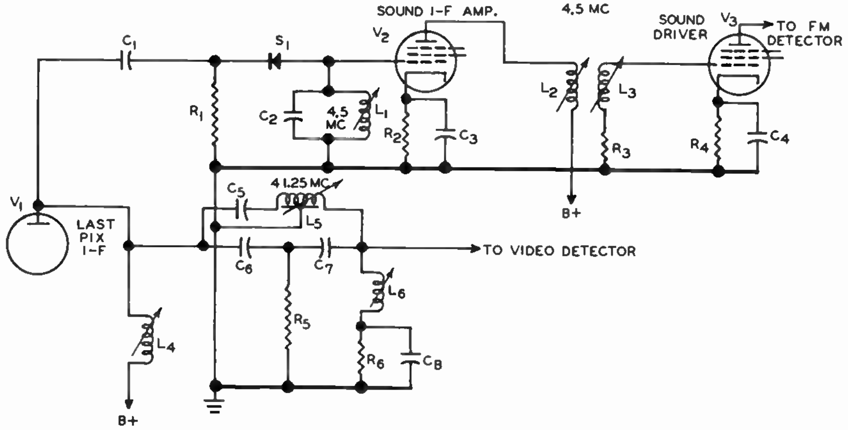

FIGURE 12

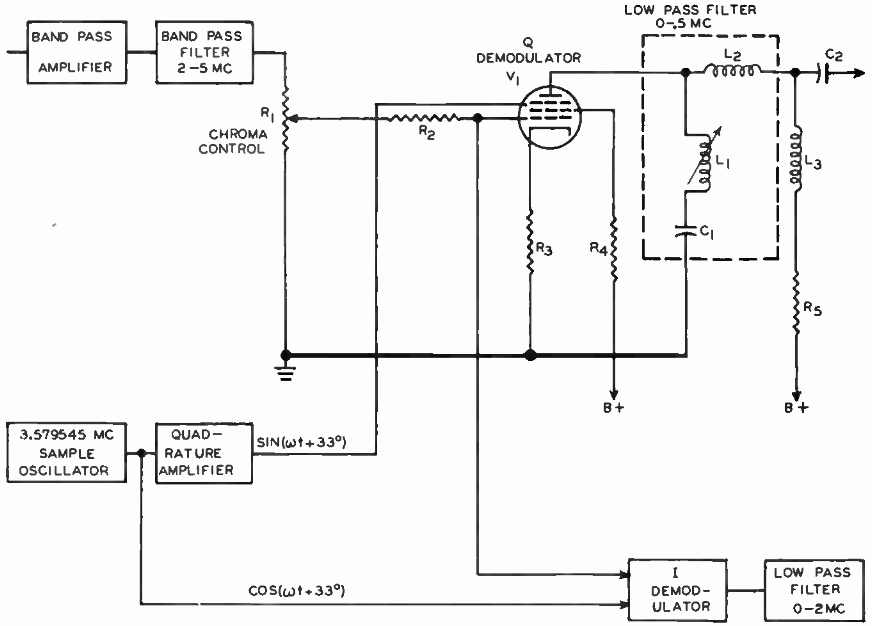

FIGURE 17

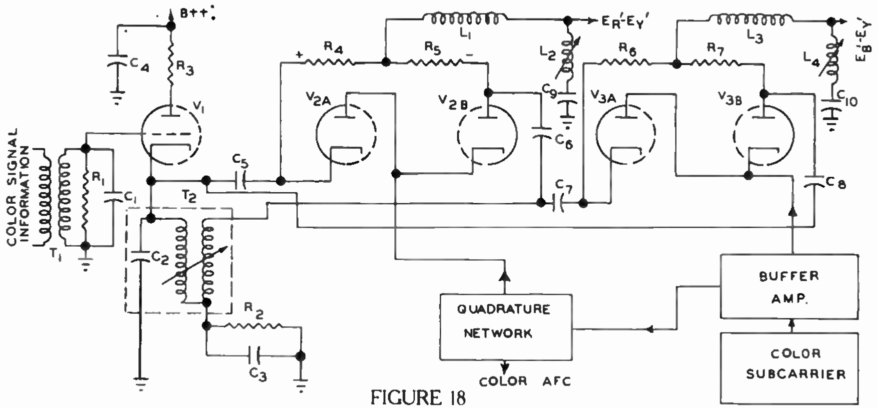

FIGURE 18

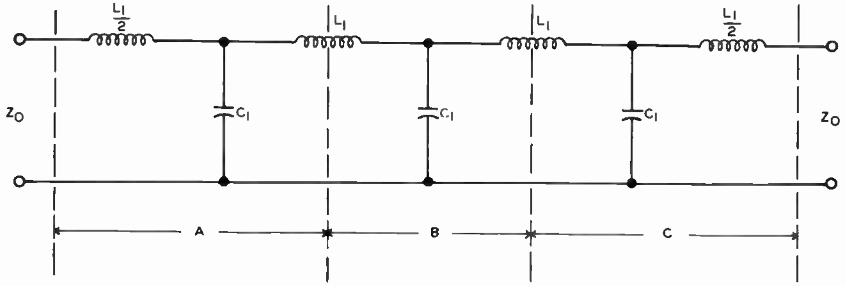

FIGURE 19

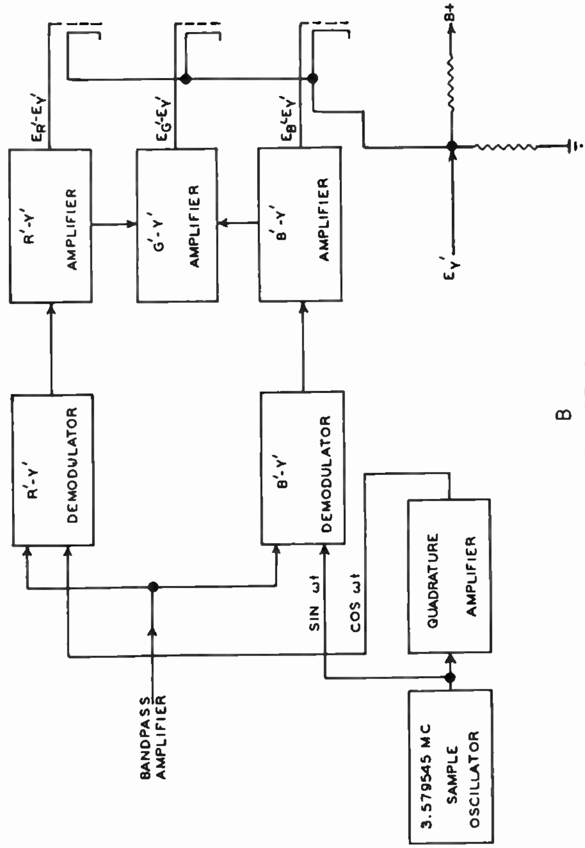

B

FIGURE 13

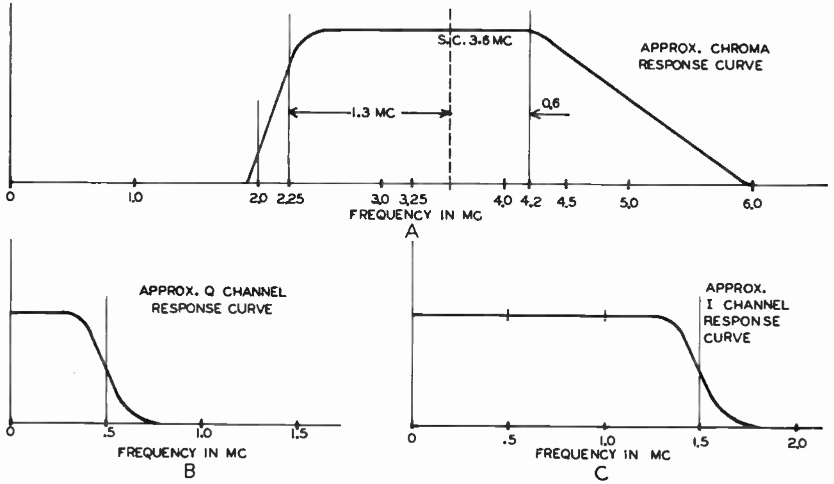

FIGURE 14

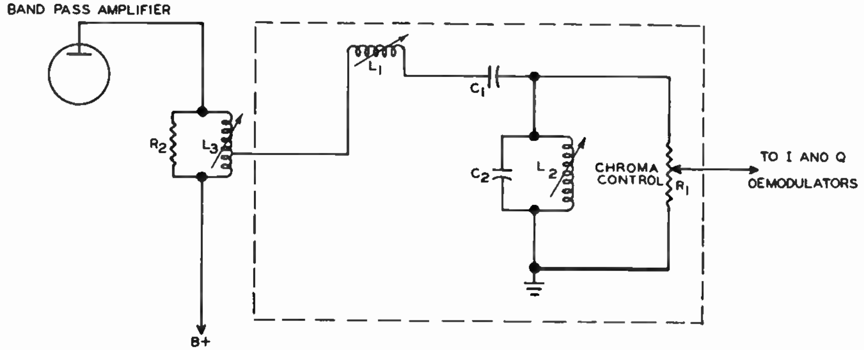

FIGURE 15

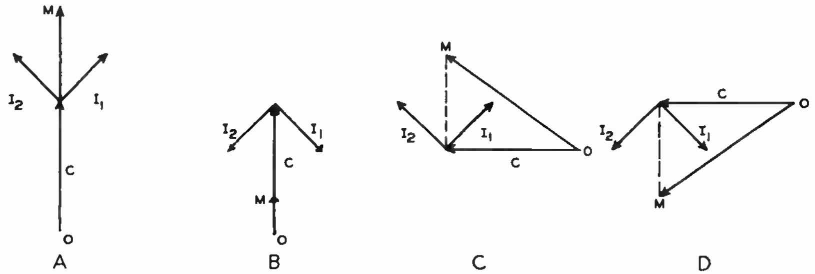

FIGURE 16

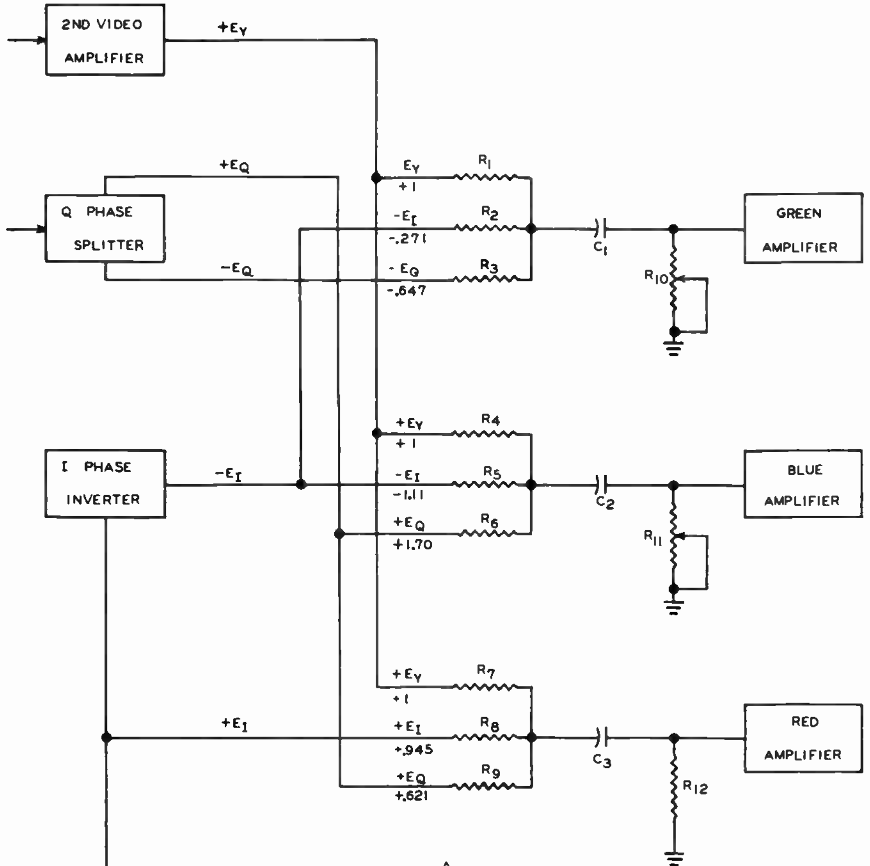

A

E_Y'	E_I'	E_Q'	
+1	-0.271	-0.647	$\rightarrow E_G'$
+1	-1.11	+1.70	$\rightarrow E_B'$
+1	+0.945	+0.621	$\rightarrow E_R'$

B

FIGURE 20

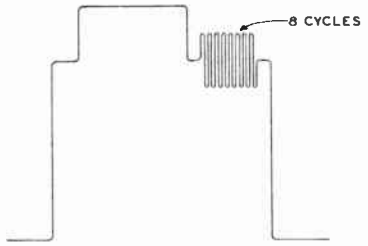

FIGURE 21

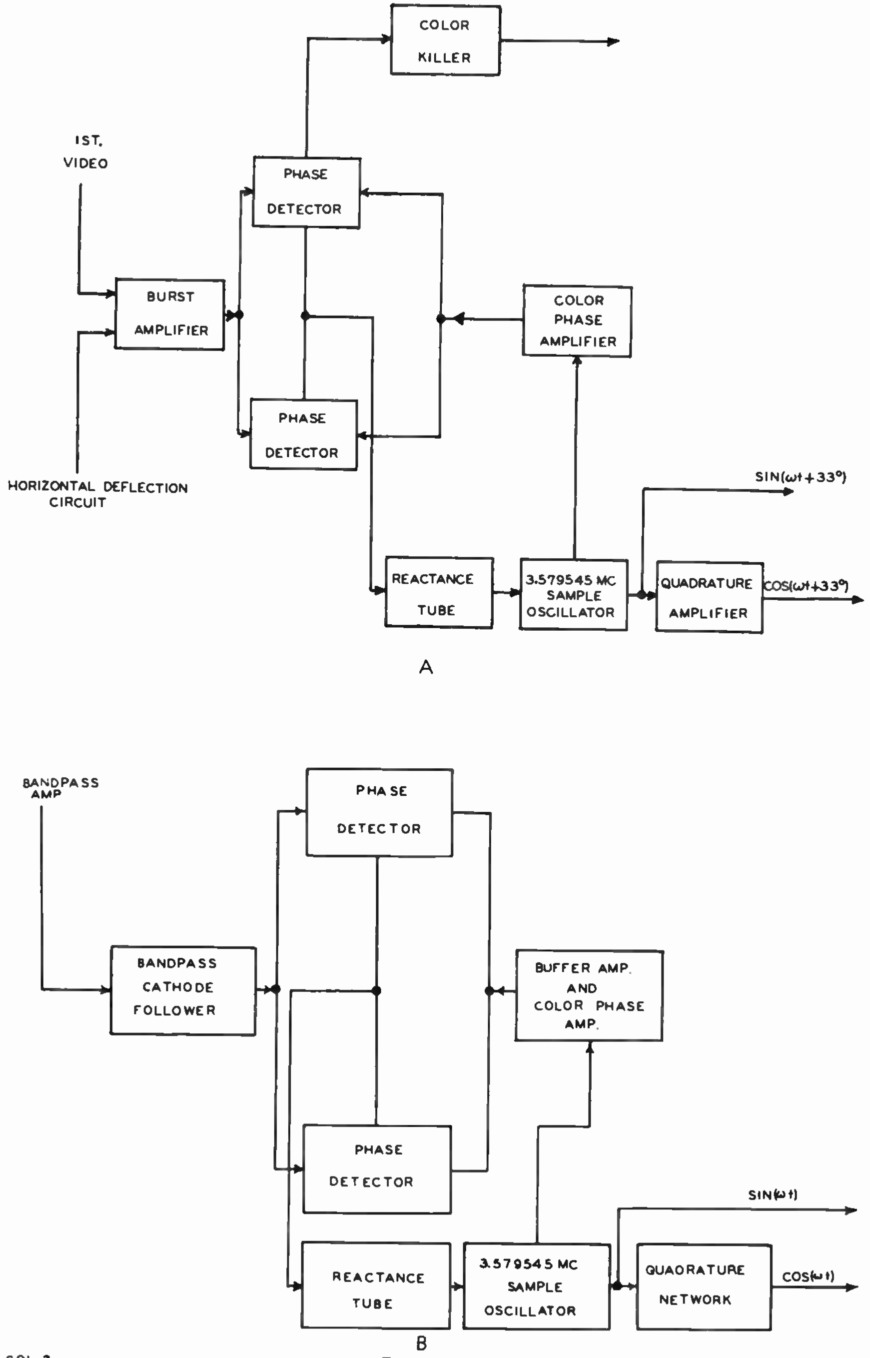

FIGURE 22

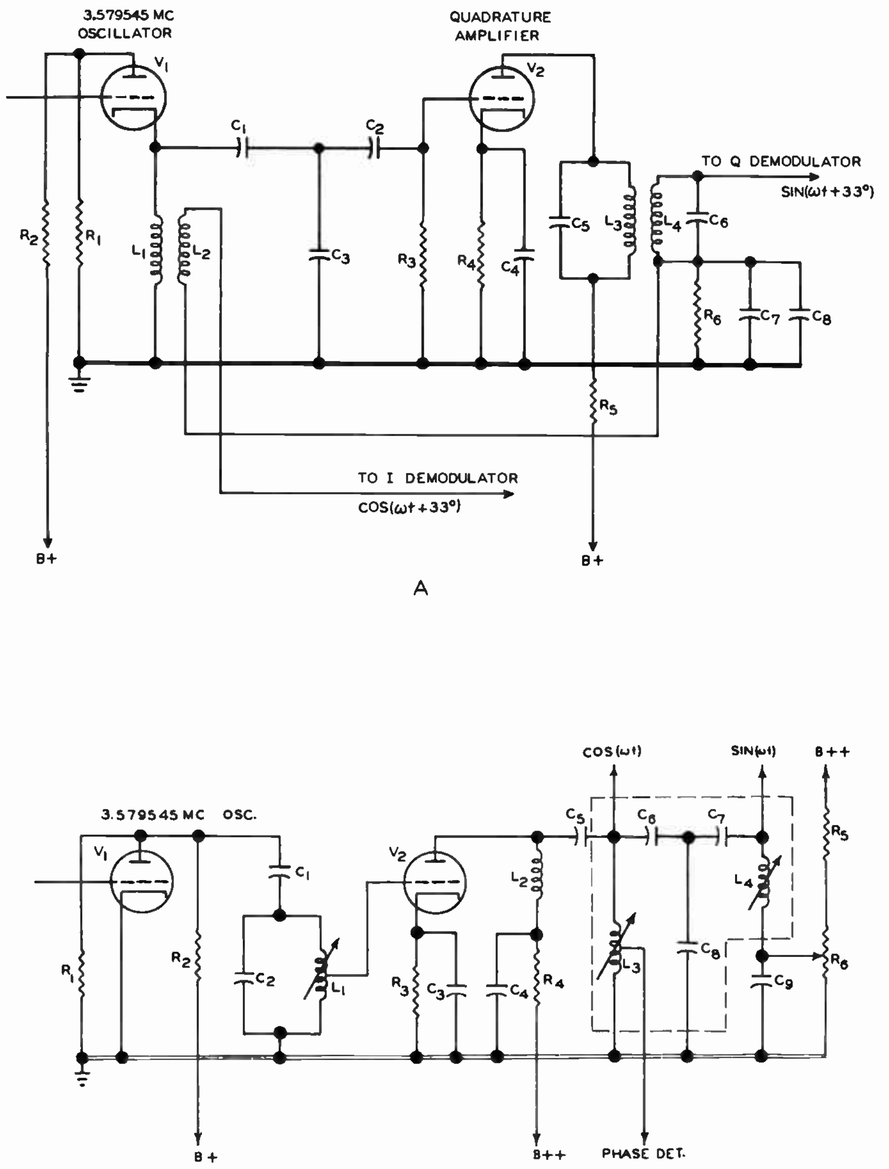
3.579545 MC
OSCILLATOR
V1
QUADRATURE
AMPLIFIER
V2
C1
C2
R2
R1
L1
L2
C3
R3
R4
C4
C5
L3
L4
C6
TO Q DEMODULATOR
SIN(ωt+33°)
R6
C7
C8
R5
TO I DEMODULATOR
COS(ωt+33°)
B+
B+
3.579545 MC OSC.
V1
R1
R2
C1
C2
L1
V2
R3
C3
C4
R4
L2
COS(ωt)
SIN(ωt)
B++
C5
C6
C7
L3
C8
L4
C9
R5
R6
B+
B++
PHASE DET.

A

B

FIGURE 23

DeVRY Technical Institute

Formerly DeFOREST'S TRAINING, INC.

4141 WEST BELMONT AVENUE CHICAGO 41, ILLINOIS

QUESTIONS

Color Demodulation—Lesson COL-3B

1

How many advance Lessons have you now on hand?..........................

Print or use Rubber Stamp.

Name.. Student No.....................................

Street...Zone......................... Grade...................................

City...State.............................. Instructor...............................

Write your answers on the "Ans." line below each question. If more space is needed use reverse side of this page.

1. Of the various signals from the transmitter matrix, which one contains the fine detail video information?

Ans....

....

2. In the color television transmitter, what is the nature of the output of the balanced modulators?

Ans....

....

3. Why are bandpass filters used in the output of the balanced modulators?

Ans....

....

4. To permit two signals to amplitude modulate a common carrier without interaction, in what way is the color subcarrier applied to the balanced modulators?

Ans....

....

5. Why are delay lines employed in the I and Y channels?

Ans....

....

6. Why is the i-f bandwidth in a color receiver greater than that required in a black and white receiver?

Ans....

7. With regard to picture detail, what is the main difference between wideband and narrowband color receivers?

Ans....

....

8. What is the process called in which the modulated signal with suppressed carrier is heterodyned with a sine wave of the same frequency and phase as the original carrier component?

Ans....

....

9. What is the purpose of the receiver matrix?

Ans....

....

10. During monochrome reception, the passage of signals to the I and Q demodulators is prevented by what receiver circuit?

Ans....

....

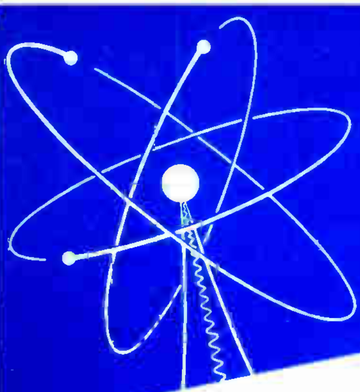

Color Sync Circuits

Lesson COL-4B

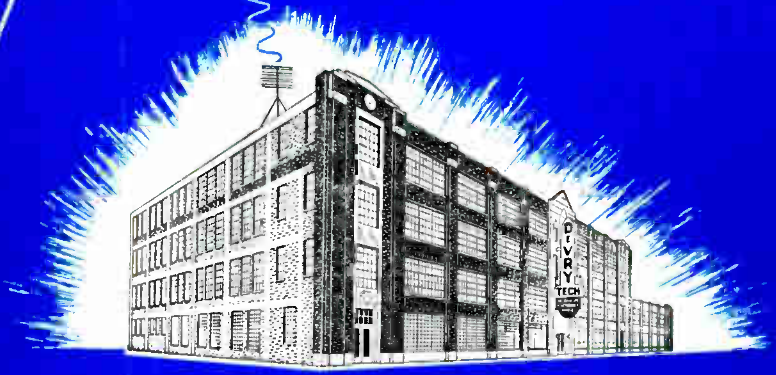

DeVRY Technical Institute

4141 W. Belmont Ave., Chicago 41, Illinois

Formerly DeFOREST'S TRAINING, INC.

COL-4B

COLOR SYNC CIRCUITS

DeVRY Technical Institute
4141 Belmont Ave.
Chicago 41, Illinois

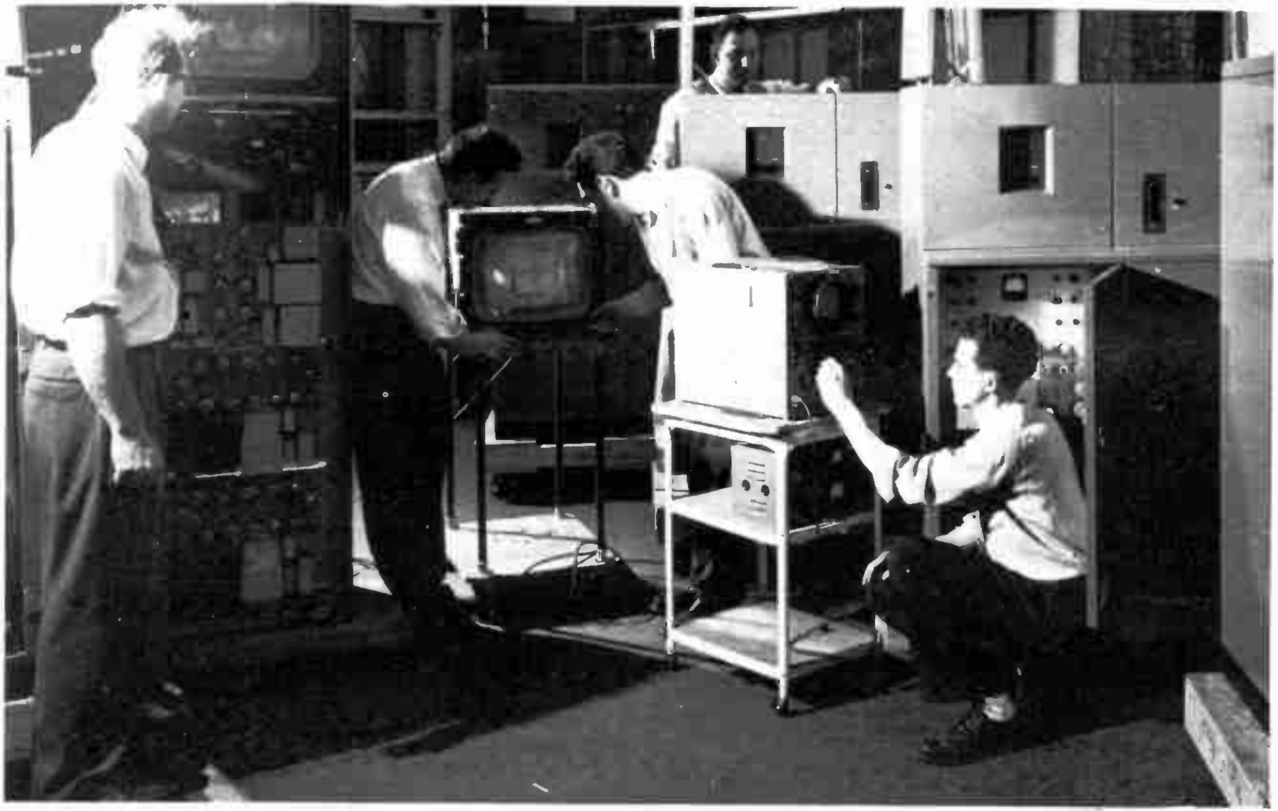

As shown here, similar test instruments are used to make operation checks of both monochrome and color equipment. Operation checks are being made by color slide and film pickup equipment (at right).

Courtesy Allen B. DuMont Laboratories, Inc.

COLOR SYNC CIRCUITS

Contents

Shirking easily becomes a habit as difficult to throw off as the use of drugs and has ruined many men's chances for success.

—Henry L. Doherty

COLOR SYNC CIRCUITS

In the television broadcast studio, the scene is focused on the pickup tube in the color camera. The variations of the light, shade, and color in the scene are converted to electric pulses by scanning the mosaic, or target area, with an electron beam. As in monochrome television, the scanning beam moving across the target picks up the picture elements one at a time in sequence. This information is carried through the transmitter in the same order, and then radiated from the antenna.

At the receiver, an image of the original scene is reproduced on the picture tube screen. The picture is "painted" on the screen by the electron beam which is modulated with the transmitted information. However, in order to obtain a true image, each element of the picture must appear in the order that pickup occurs. That is, the scanning beam in both the camera tube and picture tube must move across the scanning area at the same relative time.

When the two beams are moving across their respective scanning areas at the same time they are synchronized. Just like black and white television, the control of synchronism between the camera and the receiver is provided by the sync pulses generated at the studio. These pulses are carried to the camera by transmission lines and are added to the composite video signal radiated by the transmitter.

In addition to these sync pulses, which control the sweep circuits of the receiver, a color sync signal must be transmitted to control the color of the picture elements. The portion of the composite wave-form which carries the color information is independent of the signal which carries the brightness information, and therefore, it requires separate control.

The composite video wave for color transmission consists of the following components: The luminance information which determines the brightness of picture elements; the sweep sync signal which properly locates the picture elements in the reproduced image; the chrominance information which carries the hue and saturation information; and color sync signal which makes sure the correct hue and saturation information is detected.

Essentially the difference between a black and white and color TV receiver, not considering the picture tube, is the addition of a chrominance section. Within the chrominance section two major events happen to the transmitted signal. First, the color information present in this signal is synchronized with that of the transmitter and secondly, once the synchronization is settled, the I and Q or the B-Y and R-Y signals are demodulated. Having finished color demodulation in a previous lesson, we are now in a position to examine the necessary color sync circuits which will produce the desired demodulator voltages. At this point, a brief review of the transmitted signal will show a need for this color synchronization.

NEED FOR COLOR SYNCHRONIZATION

The transmission system connecting the camera and picture tube must carry the information representing the red, green, and blue primary colors in the scene to be reproduced. These three colors are not transmitted as separate signals to operate a receiver. For compatibility, a signal arrangement is required which provides a brightness component designed to operate a black-and-white receiver. Furthermore, the transmission of these three separate signals does not make the most efficient use of the television channel.

To use the 6 mc channel efficiently, three new signals are transmitted: a brightness component "Y" which occupies the major portion of the channel width, and two chroma signals I and Q with less than 1.3 mc channel width. The primary color signals produced by the color camera are sampled in the matrix to produce these three signals. At the receiver, similar circuits must reconvert the brightness and chroma signals back into the three primary color signals which are suitable for operating the tri-color picture tube.

Since a chroma signal modulates subcarriers at 3.58 mc in the standard broadcast color system, the chroma signal represents the hue and saturation of a picture element for a given brightness. Furthermore, these subcarriers are suppressed at the transmitter and so carriers must be reinserted at the receiver. The chroma signal information is transmitted in terms of voltages which vary in both phase and amplitude. Therefore, two 3.58 mc subcarriers must be reinserted at exactly the proper phase angle, otherwise the chroma signal, when demodulated, does not reproduce the original color voltages. Therefore, very exact phase controlling circuits are necessary to assure correct voltages at the output of the demodulators.

PHASE CONTROL CIRCUITS

Two types of 3.58 mc phase control circuits are popular in color TV receivers. The automatic phase control (apc) circuit shown

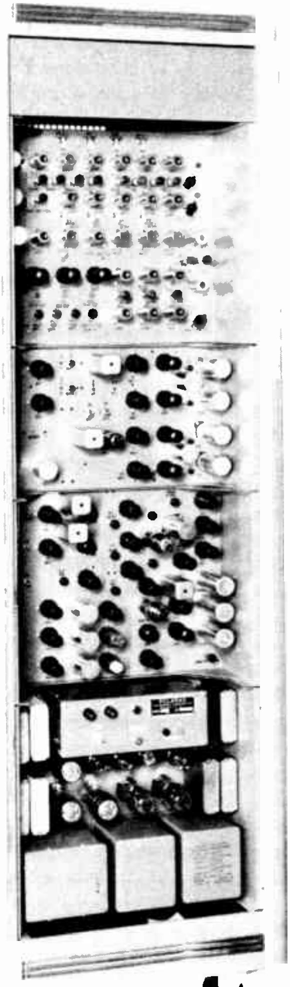

This color bar generator provides a video signal for test purposes. The third panel from the top controls the color burst and sweep sync signals.
Courtesy Polarad Electronics Corp.

in Figure 1A is used more commonly of the two. The second type has a crystal ringing circuit as shown in Figure 1B.

In the standard broadcast color television signal, the hue is transmitted as phase modulation of a subcarrier. The saturation of the color for a given luminance is provided by amplitude modulation. In order for the receiver to detect the phase of the chroma signals, a reference signal must be supplied at the receiver. A local 3.579545 mc sampling oscillator is used for this purpose.

To make sure that this local subcarrier oscillator has the same phase and frequency as the transmitter oscillator, a color burst is transmitted at the subcarrier frequency during line retrace interval to synchronize the local oscillator. By means of this burst, the color sync circuits in the receiver control the phase of the reinserted subcarrier.

For both Figures 1A and 1B, the color sync circuit is in operation, that is, chrominance information passes through it, only when the 3.58 mc burst is present on the back porch of the sync pulse. The output from the block labelled "color killer" in each circuit is zero allowing the I and Q demodulators or R-Y and B-Y demodulators to perform their action for color signals. However, for black and white reception, the output of the color killer in both phase control circuits is such that the demodulators are cut-off. Thus, the luminance voltage E_Y'

cannot enter the demodulators to cause any color interference whatsoever. Also the burst amplifier is off so that the luminance voltage E_Y' cannot enter the sync section.

Two signals are applied to the burst amplifier. The color burst is supplied by the 1st video amplifier and the gating pulse is taken from horizontal deflection circuits. To prevent video frequencies near 3.58 mc from entering the phase detector circuits, the burst amplifier normally is biased to cutoff. Only when a color burst arrives, does the gating pulse applied to the stage cause conduction. Therefore only the color burst is amplified and applied to the next stage.

In Figure 1A the phase detectors receive a second signal from the local 3.58 mc sampling oscillator through the color phase (or buffer) amplifier. A variable adjustment in this amplifier is provided to assure a correct final reference phase of the oscillator output in the wide band chrominance receiver. The phase of the color burst is compared to the output of the color phase amplifier to determine the d-c control voltage which is applied to the reactance tube. The magnitude and polarity of this control voltage is proportional to the degree and direction of oscillator phase shift.

The reactance presented to the oscillator by the reactance tube is determined by its normal operating bias. Any change in this bias by the d-c control voltage changes its reactance and, in turn, the frequency and phase of the oscillator output. The direction of change is such as to correct the phase of the locally generated subcarrier. The output of the 3.579545 mc oscillator is applied to the two receiver demodulators. One is applied direct and the other through a 90° phase shifting circuit called the quadrature amplifier or network.

In addition, the apc circuit provides a d-c control voltage to the color killer stage used in some receivers. This circuit prevents the application of signals to the receiver color channels during the reception of a monochrome picture. Note the color killer conducts on horizontal sync pulses only.

In the second type of color sync circuit of Figure 1B, the same two inputs are provided to the burst amplifier. Since the 3.58 mc burst is all that is passed through the amplifier, it is applied to a crystal ringing circuit. Essentially, the crystal ringing circuit is a high-Q circuit, including a crystal resonant to only one frequency, in this instance 3.58 mc. When the burst is applied to the circuit, it causes the circuit to oscillate or "ring", being of the proper phase due to the burst itself. This properly phased reference voltage is then applied to an amplifier. The amplifier output provides a sufficiently large signal so that its amplitude is controlled to a desired level by the limiter. This allows a constant amplitude reference voltage, free from noise peaks, and assures proper demodulation. To provide proper low impedance matching into the demodulators, a cathode follower is used. In addition, the quadrature network is the second cathode follower. Since the output of the 3.58 mc limiter is not large enough, a voltage doubler labelled "color killer doubler" precedes the color killer stage. Again note that the color killer stage is gated and conducts only on every horizontal sync pulse.

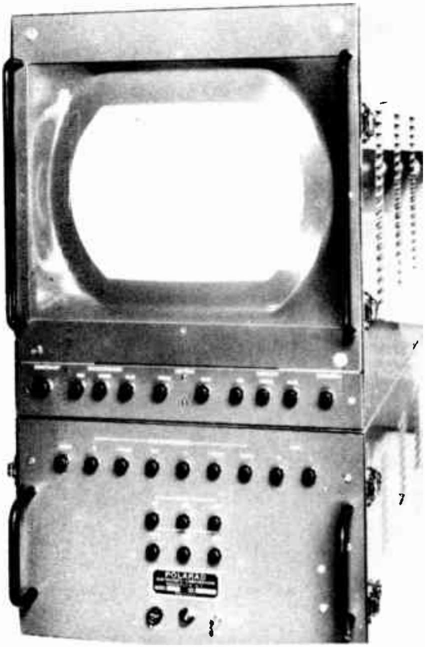

The color TV video monitor is used to check the quality of NTSC signals in the studio.
Courtesy Polarad Electronics Corp.

Each of the stages of these two major types of color sync sections needs to be described in detail. First, let's consider the stages of the apc system for both narrow and wide band chrominance receivers. There are a few minor differences in the apc system for a wide band as compared to a narrow band chrominance receiver, but none of these affect the block diagram of Figure 1A.

Gated Burst Amplifier

The phasing accuracy of the apc system depends on the information contained in the color burst. To prevent other frequencies contained in the composite video signal from affecting the phase of the subcarrier oscillator, the burst is separated from the video signal by the gated burst amplifier. The circuit diagram of this amplifier as used in a wide band chrominance receiver is shown in Figure 2A. Figure 2B is the narrow band receiver circuit.

In Figure 2A, color bursts are coupled inductively to the burst amplifier V_1 by transformer T_1

which is tuned to 3.58 mc. The primary of T_1, not shown, is located in the plate circuit of the video amplifier. In order to amplify only the burst, V_1 is allowed to conduct only during the time the burst is present at the grid.

The amplifier V_1 is biased to cutoff by a fixed positive voltage applied to the cathode by the voltage divider R_3R_4 connected across the power supply. R_3 is bypassed by capacitor C_4 to prevent a change in bias during the time a gating pulse is applied to the cathode.

During the horizontal blanking interval a negative pulse is applied to the cathode of V_1 from transformer T_2. This is a secondary winding on the horizontal output transformer. The flyback pulse which is applied to the cathode is wide enough to allow the tube to pass the 9 cycles of the color burst. The C_4R_3 network is an integrator which delays the gating pulse so that the burst amplifier conducts during the precise time interval that the burst is present at the grid. Amplified in the plate circuit, the color burst is transformer coupled to the phase detectors by T_3.

In the narrow band chrominance circuit of Figure 2B, the operation of the burst amplifier is somewhat the same. A signal from the bandpass amplifier enters L_1 through T_1. L_1C_1 are tuned to 3.58 mc forming a parallel resonant circuit. When the horizontal sync gating pulse at T_2 raises the voltage on the screen grid, the 9 cycle burst is amplified by stage V_1. R_3C_3 provides the necessary time delay for this pulse to drive the tube into conduction exactly when the burst is present. Transformer T_3 is tuned to 3.58 mc and its output is applied to the phase detectors. Therefore, without the burst, during a black and white transmission, V_1 does not conduct; hence no burst reaches the phase detectors. Capacitor C_1 is a color shading (hue) control located at the front of the receiver. It determines whether the resonant circuit L_1C_1 is slightly inductive or slightly capacitive to the burst and thus, determines the precise phase relationship of the amplified burst with respect to the applied burst.

Phase Detector

Tuned to 3.58 mc, the secondary of T_3 in Figure 3A is tightly coupled to a primary located in the plate circuit of the burst amplifier. Opposite ends of the secondary connect to separate triode tubes. These tubes V_2 and V_3 are connected as grid-cathode diodes and the plates, tied to ground through the R_9C_{10} and R_8C_9 networks, act as shields.

In this detector, the phase of the incoming burst is compared with the signal fed from the oscillator through a color phasing amplifier to the phase detector.

The color reference bursts, coupled to the secondary of T_3 are applied to the grid-cathode diodes V_2 and V_3. Although the burst consists of 9 cycles, only one cycle is used in the following description. Since these diodes are connected in series across the secondary T_3, conduction takes place only on one half of each cycle.

The conduction period is illustrated by the solid line curve, and the nonconduction time by the dashed line curve. Negative half cycles are applied through C_7 to the cathode of V_2 and positive half cycles through C_8 to the grid of V_3. The diodes conduct in series charging C_7 and C_8 to the polarity shown and in the direction of the arrows. R_{10} is at ground potential at this time.

During the charging interval, electrons flow from the negative end of the secondary T_3 to the negative plate of C_7. From the positive plate of C_7, the electrons flow through diodes V_2 and V_3, from cathode to grid, to the negative plate of C_8. Electrons flow from the positive plate of C_8 to lower positive end of the T_3 secondary. Conduction of the diodes charge the capacitors to peak voltage of the sine wave. Potentiometer R_{11}, which is called the apc balance control, balances the voltage applied to each half of the circuit. Proper adjustment is necessary to assure positive control by the circuit.

When the remaining half of the cycle (in dashed lines) is applied, the diodes do not conduct. During this time, capacitors C_7 and C_8 of Figure 3A discharge slightly through the T_3 secondary, R_7, R_{11}, and R_6. This action places a bias on diodes V_2 and V_3. Therefore, the phasing voltage applied to the detector from V_1 does not cause conduction during this interval.

The bias across each diode is made equal by adjusting the slider of R_{11} so that the resistance of the lower part of R_{11} plus R_7 equals the upper part of R_{11} and R_6. With the bias opposing the conduction of V_2 and V_3, only the peak of the burst with the polarity shown on the T_3 secondary can overcome this d-c voltage. Operating in this way, diodes V_2 and V_3 serve as an electronic switch.

A comparison voltage from the local 3.58 mc oscillator is amplified and applied to the phase detectors across R_{10}. The amplitude of this signal is not sufficient to overcome the bias provided by C_7 and C_8, and the phasing voltage is unable to cause conduction of the diodes. However, during the intervals the diodes are driven into conduction by the reference burst, small portions of the oscillator signal are impressed across the phase detectors.

When the oscillator voltage, applied to R_{10}, is going through zero at the instant the burst causes conduction of the diodes, no control voltage is developed. With a negative voltage applied to R_{10} at the instant the diodes V_2 and V_3 conduct, an added conduction takes place in V_3 with less in V_2 due to the oscillator signal. The electron flow is through V_3 from cathode to grid, through C_8 to the T_3 secondary center tap. From the center tap down through C_{19} and $R_{17}C_{20}$ to ground. and to the bottom end of R_{10}.

With a positive oscillator voltage applied to R_{10}, the conduction is increased through V_2 while it is now less through V_3. Electrons flow from ground up through C_{19} and $C_{20}R_{17}$ to the secondary center tap. From the center tap, the electrons flow through C_7, cathode to grid of V_2 to the top of R_{10}. The voltage developed across the low pass filter $C_{19}R_{17}C_{20}$ is the control voltage. It may be positive or negative depending upon the direction of charging current.

The phase relationships of the reference burst and oscillator wave-forms for the three conditions shown in Figure 4 illustrate the development of control voltage more completely. In Figure 4A, a negative pulse is applied to the V_2 cathode and a positive pulse to the grid of V_3 while the oscillator voltage is crossing its zero axis. It must be remembered that only the peaks of the burst voltage cause the diodes to conduct. Although the burst pulses cause V_2 and V_3 to conduct, the oscillator voltage is zero at these instants, therefore the charge on C_{19} remains at zero.

The color television receiver is designed to provide either color or monochrome pictures for home entertainment. The front panel controls are, from left to right, on-off-volume, chromo, horizontal and vertical hold, contrast, and station selector.

Courtesy General Electric Co.

A slight increase in the local 3.58 mc oscillator frequency results in the phase relationship shown in Figure 4B. Here, the oscillator voltage is small and positive most of the time, making V_2 grid more positive. This positive voltage across R_{10} causes V_2 to conduct more, charging capacitor C_{19} positive with respect to the ground end. This is a control voltage which is applied to the reactance tube to reduce the oscillator frequency.

This positive voltage aids the pulse applied to V_2 and subtracts from the pulse applied to V_3. Thus, V_2 conducts more than V_3. The additional current through V_2 is supplied by the charging current of C_{19}. Electrons flow from ground to the lower plate of C_{19} and from the upper plate to the T_3 secondary center tap. From the center tap, electrons flow through the upper winding to the negative plate of C_7. Other electrons flow from the positive plate through V_2, cathode to grid, to the top of R_{10}.

With a slight decrease in the oscillator frequency, the phase relationships are as shown in Figure 4C. The oscillator voltage at the top of R_{10} is mostly negative at the time the reference burst causes conduction of diodes V_2 and V_3. With a negative oscillator voltage applied, V_3 conducts more than V_2.

The additional electrons flow from the V_3 cathode to the grid and then to the negative plate of C_8. From the positive plate, other electrons flow through the lower winding of T_3 to the center tap and down to the upper plate of C_{19}. Other electrons flow from the lower C_{19} plate to ground and up through R_{10} to the V_3 cathode.

When the electron flow is in this direction, a negative control voltage is developed across the $C_{19}R_{17}C_{20}$ low-pass filter. Since, a negative control voltage applied to the reactance tube increases the 3.58 mc oscillator frequency, the oscillator phase is corrected automatically by this circuit.

In one narrow band chrominance receiver, diodes are used in place of triodes for phase detection. Figure 3B shows the circuit which is identical in operation to that of Figure 3A. The heavy arrow lines indicate the charge path of C_7 and C_8. Resistor R_{11} again is the balance control. Using the analysis of Figure 4, the 3.58 mc oscillator signal is impressed across L_1 and L_2, the output of the low pass filter $C_{10}R_{10}C_{11}$ is either zero or a + or − voltage. Again a negative control voltage changes the reactance tube to increase the oscillator frequency, while a positive voltage causes the reactance to decrease the oscillator frequency.

Phase Control Amplifier

In the apc system of a wide band chrominance receiver the

phase control amplifier V_4 shown in Figure 5A controls the oscillator phase. This amplifier stage determines the phase of the signal fed to the detectors for comparison. By adjusting this circuit the exact phase of the oscillator with respect to the reference burst can be controlled. Potentiometer R_{16} is located on the front panel of the receiver and is called the phase or **hue control.** The adjustments are made by the operator to correct the phase of the oscillator. When the sampling oscillator output is of the correct phase the proper colors are reproduced in the image.

The reference with which the local oscillator voltage is compared is the transmitted color burst. In the transmitter, the phase relationship of color sync signal and the chrominance subcarriers are determined with respect to the phase reference. For the color burst, the phase relationship is the phase reference plus 180°. The I and Q chrominance signals are in quadrature (90°), and the Q signal leads the phase reference by 33°.

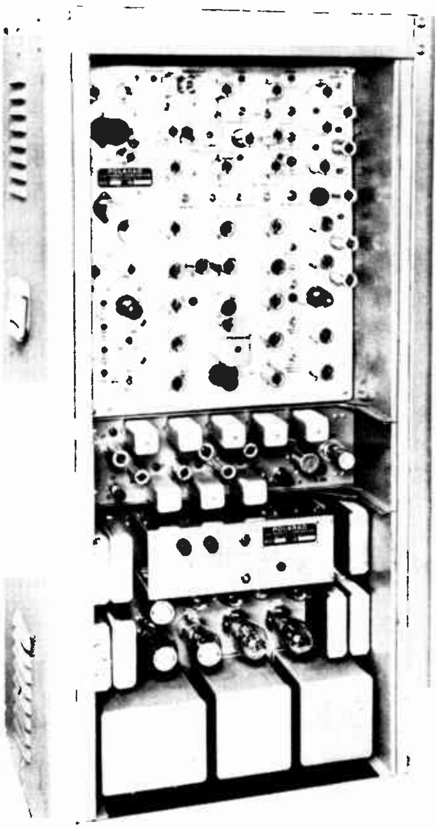

This color synchronizing generator furnishes NTSC color subcarrier frequency and driving, blanking and sync pulses. It is used to drive color bar generators and other NTSC color generating equipment.

Courtesy Polorad Electronics Corp.

In order for the correct colors to be reproduced in the receiver, the relative phase of the color burst and I and Q signals must be retained. However, the color burst is used as the reference in the receiver and to retain the same relative phase relationships, the I and Q signals must lag the burst. Thus, the phase control amplifier V_4 is provided to shift the phase of the oscillator output with respect to the color burst.

To illustrate the phase shift network of the V_5 stage, it is redrawn in simplified form in Figure 6A. The operation of the phase shift circuit is based on the principle that an alternating current through a resistor is in phase with the applied voltage, while the current in and out of a capacitor leads the voltage by 90°. Stated in another way, the a-c voltage across a resistor is in phase with the current, while the a-c voltage across a capacitor lags the current by 90°.

In Figure 6A, capacitors C_{11} and C_{12} are combined to form capacitor C_{eq} which is connected between points A and P. Potentiometer R_{16} is connected between points P and B. Capacitor C_{eq} in series with R_{16} is connected across the secondary of transformer T_4. The T_4 secondary in parallel with C_{13} is tuned to 3.58 mc. At 3.58 mc, the center tap (point O) of the T_4 secondary is effectively grounded as shown by the dashed line across C_{15}. Hence, for all practical purposes R_{10} is connected between points P and O.

Ideally, the phase relationship between the current and voltage is an RC network with a-c applied as shown with the aid of vectors.

Figure 6B is the equivalent circuit of Figure 6A. Taking E_{osc} as the phase reference voltage which it really is by the FCC Standards, it is drawn horizontal and to the right in Figure 6C. The total current in an RC circuit leads the applied voltage by some angle depending upon their values. Therefore, I_T is some positive angle from E_{osc}. Positive angles are measured in a counterclockwise direction while negative angles are measured in a clockwise direction. Since the voltage across a resistor is in phase with the current through it, $E_{R_{16}}$ is drawn larger than I_T at the same angle since it is I_TR_{16}. Now, the voltage across C_{eq} lags $E_{R_{16}}$ by 90°.

However, to complete the story of Figure 6A we must go one step further with Figure 6B. Figure 6D is a closed Figure drawn using $E_{C_{eq}}$, E_{osc}, and $E_{R_{16}}$ of Figure 6C. Note that the E_{osc} is still horizontal and $E_{C_{eq}}$ is drawn in the same position. Voltage vector $E_{R_{16}}$ is drawn in the same direction but from the arrow end of $C_{C_{eq}}$. This closed figure tells a familiar story: the voltages of the entire circuit must equal the applied voltage E_{osc}. Figures 6C and 6D really mean the same thing except that Figure 6D is more to the point. Corresponding points of Figure 6A appear on Figure 6D. Thus, the voltage across the primary between A and B is represented by the vector from A to B in Figure 6D. Voltage vector $E_{R_{10}}$ is then from O to P considering C_{15} in Figure 6A as a direct connection.

Whenever R_{16} is adjusted, voltage vectors $E_{R_{16}}$ and $E_{C_{eq}}$ change in direction (phase) and length

Color picture tubes are given a life test by producing an unmodulated raster on the screen. The raster is produced by deflection oscillators similar to those used in the TV receiver.

Courtesy General Electric Co.

(amplitude). As a result, voltage vector $E_{R_{10}}$ changes in direction but not in length since it swings around on the arc of a circle. This happens because E_{osc} is a constant voltage amplitude.

For proper operation of the phase detectors with zero correction voltage out, the burst must lag the comparison voltage $E_{R_{16}}$ by 90°. Figure 4A illustrates this condition very nicely. To V_2 and V_3 are applied 180° out of phase voltages. When $E_{R_{10}}$ is applied to each diode section as shown by the middle part ($E_{R_{10}}$) of Figure 4A, the output voltage is zero. This is shown in Figure 6D in vector form by the broken arrow at P′.

In Figure 7A, when $E_{R_{10}}$ is less than 90° from the burst, also indicated by Figure 4B, the oscillator voltage is some angle L away from the voltage vector $E_{R_{10}}$.

A d-c correction voltage is fed to the reactance tube which changes the oscillator frequency.

As the oscillator phase shifts, the voltage across $E_{R_{10}}$ follows this shift in the proper direction. When the oscillator reaches the position in Figure 7B, $E_{R_{10}}$ and the burst are 90° apart. Now there is zero correction voltage, being the condition of Figure 4A.

Working backwards, a phase difference of 90° between the burst and comparison voltages is maintained by the phase detectors. With a fixed phase shift of 123° across the phase control amplifier, the oscillator is shifted 33° from the zero degree reference.

The phase relationships shown in Figure 7B are correct for proper demodulation. The output of the oscillator may be fed directly to the Q demodulator, while the same voltage is fed to a quadrature amplifier for the I demodulator. Any shift of the relative phase relationships causes improper hue of the colors in the reproduced image.

In one type of narrow band chrominance receiver, there is no phase control amplifier. The hue control is part of the parallel resonant circuit in the burst amplifier of Figure 2B and is C_1, referred to as the color shading control. Here the resonant tank is adjusted until it is in phase with the burst signal which then develops a maximum voltage across the tank. If it is not tuned exactly to 3.58 mc, the voltage developed is lower and lags or leads the burst by that amount. Thus, in the plate circuit C_4, R_4, and the primary of T_3, being resonant about 3.58 mc, a leading or lagging signal is sent to the phase detectors shown in Figure 3B.

In place of the color phasing amplifier, the narrow band chrominance receiver uses an ordinary buffer stage as shown in Figure 5B to isolate the oscillator from the phase detectors. To keep its input circuit impedance rather constant, fixed cathode bias is used. The plate circuit is practically tuned to 3.58 mc by the peaking coil L_6. Finally the subcarrier is fed to both the quadrature network and phase detector which is shown in Figure 3B.

Reactance Tube and Oscillator

In the color television receiver, a 3.58 mc subcarrier is generated and used to demodulate the chrominance signal. The local subcarrier must be of the same frequency and phase as the subcarrier used for modulation in the transmitter. Usually, a crystal controlled oscillator is used to provide a stable frequency and a reactance tube to control its phase.

A reactance tube and 3.58 mc crystal oscillator circuit is shown in Figure 8A. The oscillator V_6 is operated as a cathode follower. When operated in this manner, a signal fed back from the oscillator is reduced. Otherwise these would cause spurious oscillations in the reactance tube plate tank L_2C_{24} which would change the phase of the oscillator output voltage.

Transformer T_5 is tuned to a frequency which is slightly lower than the crystal frequency. Hence, the T_5 primary presents a capacitive reactance to the 3.58 mc frequency which is necessary to maintain oscillations. The feedback voltage is coupled to the grid by capacitor C_{28} and the grid-cathode capacitance of the tube. The crystal determines the phase and frequency of the subcarrier coupled by the T_5 secondary and capacitors C_{29} and C_{31} to the demodulator circuits. C_{29} and C_{30} form a capacitive voltage divider which reduces the signal amplitude fed to the phase control and quadrature amplifiers.

The reactance tube V_5, connected in parallel with the crystal, functions as a variable capacitance. It is biased by a voltage divider R_{19}, R_{20}, R_{21}, and R_{22} and, also, by self bias provided by the plate current to the center of the I_b-E_b characteristic curve. Hence, the reactance can be changed by any voltage applied to the grid. The capacitive reactance is decreased by a positive grid voltage and increased by a negative voltage.

In Figure 8A, an a-c voltage from the crystal is coupled by capacitor C_{26} to the plate of V_5. The normal d-c plate voltage is applied through R_{22} and coil L_2. Also, connected across the crystal, C_{22}, R_{18}, and L_1 form a phase shift circuit which supplies a voltage to the grid of V_5. The capacitive reactance of C_{19} is low at 3.58 mc and may be disregarded.

Capacitor C_{22} is chosen so that its reactance is much greater than the impedance of L_1 and R_{18} in series, causing a current through L_1 and R_{18} which leads the applied voltage. However, with resistance in series with C_{22}, the current leads by less than 90°. The voltage across R_{18} is in phase with this current, while the voltage across L_1 leads the current by 90°. Adding the two voltages vectorially $E_{R_{18}}$ and E_{L_1} results in a voltage applied to the grid of V_5 which leads the applied voltage by approximately 90°.

In phase with the grid voltage, the current leads the plate voltage by 90°. With the current leading the applied plate voltage, the reactance tube has the same effect as a capacitor connected in parallel with the crystal. An increase in plate current corresponds to an increase in capacitance and a decrease in current corresponds to a decrease in capacitance.

To illustrate the operation of the reactance tube circuit, assume a shift in phase occurs which corresponds to an increase in oscillator frequency. Referring to Figure 4B, this phase of oscillator signal compared to the color sync burst in the phase detector results in a positive d-c correction voltage applied across C_{19} in Figure 8. Under these conditions, a positive voltage is applied to the grid of V_5 causing an increase in plate current.

Top view of the deflection and high voltage chassis used in the color receiver. As in the monochrome receiver, the high voltage components are enclosed in a metal cage.

Courtesy Sentinel Radio Corp.

The increase in the reactance tube plate current is equivalent to increasing the capacitance represented by the tube. By this action, the larger capacitance placed in parallel with the crystal decreases the oscillator frequency until the phase relations in the detector return to the normal condition as shown by Figure 4A and no further correction voltage is applied to the grid of the reactance tube.

Conversely, with a decrease in the oscillator frequency and phase, the phase relationship of the burst and oscillator output are as shown in Figure 4C. In this case, the d-c correction voltage applied to the reactance tube grid by the phase detectors is negative. A negative voltage on the grid of V_5, Figure 8A, decreases the plate current. This is the equivalent of a smaller capacitor in parallel with the crystal and the frequency increases. Again, when the proper phase and frequency is reached, the correction voltage is reduced to zero.

Figure 8B is a slightly different reactance tube oscillator used in a narrow band chrominance receiver. The main difference between the two is that stage V_6 has a grounded cathode and has a tuned-plate circuit instead of a cathode follower type output. Again the coil is tapped down to get an impedance match so that the 3.58 mc is not disturbed in phase going to the buffer amplifier. Since the buffer amplifier merely isolates the oscillator section from the phase detectors, a cathode follower output is not required.

COLOR KILLER

The phase detector of Figure 3A is redrawn in Figure 9 with the color killer circuit added. The purpose of this circuit is to prevent picture signals from passing through the chroma channels in the receiver during monochrome reception. During monochrome reception the color killer tube conducts developing a negative voltage in its output. This voltage is used as a cutoff bias in the chroma channel. For color reception, V_4 must be cutoff to allow signals to pass through the chroma channels.

When a monochrome signal is transmitted, the color burst is omitted, and the charges across capacitors C_7 and C_8, in the phase detector, reduce to zero. Therefore, bias on the V_4 grid is determined by the voltage divider R_{28}, R_{27}, V_3 and R_{10} connected across the B+ supply. To illustrate the V_4 bias under these conditions the following values are assumed:

$R_{28} = 100$ meg

$R_{27} = 5$ meg

$R_{10} = 10K$

B+300V

The total resistance of the series voltage divider is:

$$R_T = R_{28} + R_{27} + R_{10}$$

$$R_T = 100{,}000{,}000 + 5{,}000{,}000 + 10{,}000$$

$$R_T = 105 \text{ meg (approx.)}.$$

The current through the divider is determined from the following equation:

$$I = \frac{E}{R_T}$$

$$I = \frac{300}{105{,}000{,}000}$$

$$I = .00000286 \text{ amps., or } 2.86\ \mu\text{amps. (approx.)}.$$

Since the bias is between the grid and cathode, it must be the difference in the voltage across R_{28} and the B+ supply. Therefore, the voltage drop across R_{28} is:

$$E_{R_{28}} = I \times R_{28}$$

$$E_{R_{28}} = .00000286 \times 100{,}000{,}000$$

$$E_{R_{28}} = 286\text{V}.$$

The grid voltage is 300 − 286 or 14 volts. This is a positive voltage since the B+ supply is greater than the voltage across R_{28}.

Transformer T_6, in the plate circuit of V_4, is a secondary on the horizontal output transformer. During horizontal flyback time a positive pulse is applied to the plate of V_4 causing it to conduct. The plate current of V_4 charges C_{33} to the polarity shown. Between pulses C_{33} discharges slightly through R_{29} providing a d-c voltage. This voltage is applied to the grid of the input chroma amplifier which biases it to cutoff. Therefore, monochrome signals are blocked in the chroma channels.

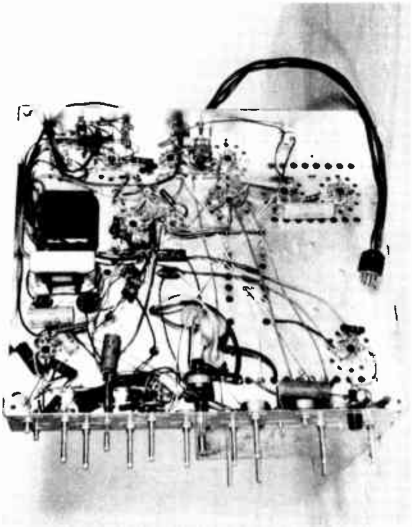

Bottom view of the deflection chassis shown in the preceding illustration. Note the heavy insulation used on the high voltage components.
Courtesy Sentinel Radio Corp.

When a color signal is received, the color killer tube must be cutoff to allow the chroma channels to operate. The color burst included in this signal is applied to the phase detectors, V_2 and V_3. These conduct, charging C_7 and C_8 to the polarities shown in Figure 10A. Capacitor C_8 charges to a peak of the 60 volts applied to the grid of V_7.

The voltage divider in the V_4 grid circuit is connected to the junction of C_8 and R_7 thus providing an additional discharge path for C_8. Following the electron path, they flow from the negative plate of C_8 through resistors R_{27} and R_{28}, then through the B supply to ground. From ground electrons flow to the lower plate of C_{19}. Other electrons flow from the upper plate of C_{19} to the center tap of T_3 and down through the lower half of the winding to the positive plate of C_8.

Although the direction of electron flow is in a direction which develops a positive control voltage across C_{19}, it has little effect on the oscillator because of the small current. Also, notice that voltage across C_8 is in series with the B+ supply. However, the bias is determined by the difference in the drop across R_{28} and B+.

To illustrate the bias applied to V_4 under these conditions, the same total resistance of 105 meg is used. However, the voltage applied to the voltage divider is B+ plus the capacitor C_8 voltage. Thus, the current in the divider is:

$$I = \frac{E_B + E_{C8}}{R_T}$$

$$I = \frac{300+60}{105{,}000{,}000} = \frac{360}{105{,}000{,}000}$$

$I = .00000343$ Amps., or 3.43 μAmps.

The voltage across R_{28} is:

$$E_{R28} = I \times R_{28}$$

$$E_{R28} = .00000343 \times 100{,}000{,}000$$

$$E_{R28} = 343V.$$

The voltage across R_{28} is negative at the grid end, therefore, the difference between $E_{R_{28}}$ and B+ is a negative voltage at the grid. That is, the difference in a −343V and 300V is −43V. This voltage is sufficient to cutoff V_4. Although a positive pulse is applied to the plate of V_4, no conduction takes place and the output is zero.

TWO COMPLETE APC CIRCUITS

A circuit diagram of the discriminator type apc circuit used in some wide band chrominance receivers is shown in Figure 10A. Tube V_1 is a gate burst amplifier. The burst is transformer coupled from the video amplifier to the grid of V_1 by T_1. Biased to cutoff, V_1 conducts only when a gating pulse is applied to the cathode by T_2 located in the horizontal deflection circuit.

When the gating pulse and color burst appear at the cathode and grid of V_1, respectively, at the same instant, the burst is amplified and appears in the plate circuit. Transformer T_3 couples the burst to the phase detectors V_2 and V_3. The apc balance control R_{11} is adjusted to allow equal conduction of V_2 and V_3 when the burst is applied. Misadjustment of R_{11} permits the oscillator to operate at the wrong phase. Also, a comparison voltage is applied to the detectors from V_4. The output of the phase detector is a d-c voltage used to control the phase of the sample oscillator.

At the junction of R_7 and C_8 is a negative d-c output which is applied to the grid of the color killer tube V_7 through R_{27}. This voltage is sufficient to overcome the positive voltage from the B+ divider to cut-off the tube during color reception. Otherwise, during black and white reception, the tube conducts charging C_{33} to the polarity shown, keeping the bandpass amplifier cut-off.

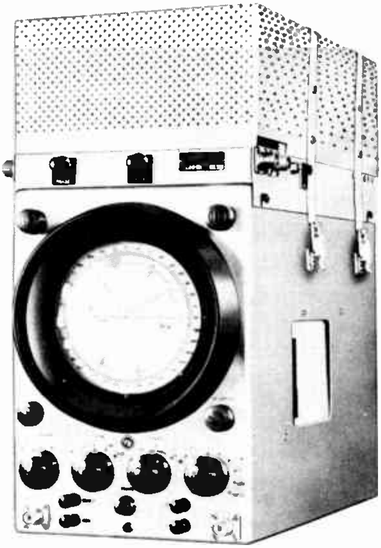

A modified oscilloscope, called a vectorimeter, shows the phase relations of the I and Q signals with respect to the burst in vectors on the CRT screen. The color decoder, burst-controlled oscillator, and power supply are contained in the chassis fastened on top of the "scope".

Courtesy Wickes Engineering and Construction Co.

The phase control amplifier V_4 has the output of the oscillator applied to the grid. By adjusting the phase control R_{16}, this amplifier maintains a fixed phase relationship between the oscillator and the comparison voltage. The phase range provided by V_4 is approximately 150°, therefore, the phase of the oscillator with respect to the burst can be controlled with large variations. The phase control is located on the front panel of the receiver to provide manual control of the colors reproduced in the picture. Misadjustment of R_{11} changes the hue. Blue changes to red, red to green, etc.

Tube V_5 is the reactance tube which operates as a variable capacitor. Connected in parallel with the crystal, it controls the phase and frequency of the oscillator. A shift in the oscillator phase causes a correction voltage to be developed by the phase detectors. Applied to the reactance tube, this voltage changes the capacitance in that direction which corrects the phase of the oscillator frequency.

The oscillator V_6 is crystal controlled and is operated as a cathode follower to prevent spurious oscillations from being generated in the reactance tube plate tank L_2C_{24}. The output of the controlled oscillator is applied to the demodulator circuits. The Q demodulator subcarrier is applied directly from the oscillator, while the oscillator output is carried through a quadrature amplifier to obtain 90° relation between demodulator signals.

This type of apc circuit has a fast recovery time and its phase control range is well within the ±5 degrees required to prevent noticeable color distortion. Other types of color synchronization circuits are used. However, the basic principles of operation are quite similar.

Figure 10B is the unified schematic of the circuits used in one type of narrow band chrominance receiver described in Figures 2B, 3B, 5B, and 8B. To avoid any confusion, being a narrow band chrominance receiver does not determine the type of color sync circuits used. The fact that these circuits are currently in use in such receivers is our way of making the distinction between the two main variations of discriminator apc circuits.

Tube V_1 is a gate burst amplifier which also phases the hues properly with the color shading control C_1. The burst is transformer coupled through T_1 from the video amplifier. Normally cutoff, V_1 conducts when a properly delayed horizontal sync pulse applied to the screen grid drives the tube into conduction.

Transformer T_3 tuned to 3.58 mc couples this signal to the phase detectors which compare it with the 3.58 mc oscillator voltage fed to V_2 and V_3 through buffer stage V_4. Balance control R_{11} adjusts V_2 and V_3 for equal conduction without a burst signal. When the burst is out of phase by some angle with the 3.58 mc applied at the plate of V_2 and cathode of V_3, a positive or negative d-c voltage is developed across the low pass filter network C_{10} R_{10} C_{11}. Whatever the d-c present on the grid of V_5, it shifts its reactance in the proper direction to bring the 3.58 mc to proper phase. The tuned-plate tuned-grid oscillator V_6 is sent through a buffer which feeds the quadrature network. In it, two 3.58 mc subcarriers appear as outputs exactly 90° apart. These are then applied to the R-Y and B-Y demodulator grids.

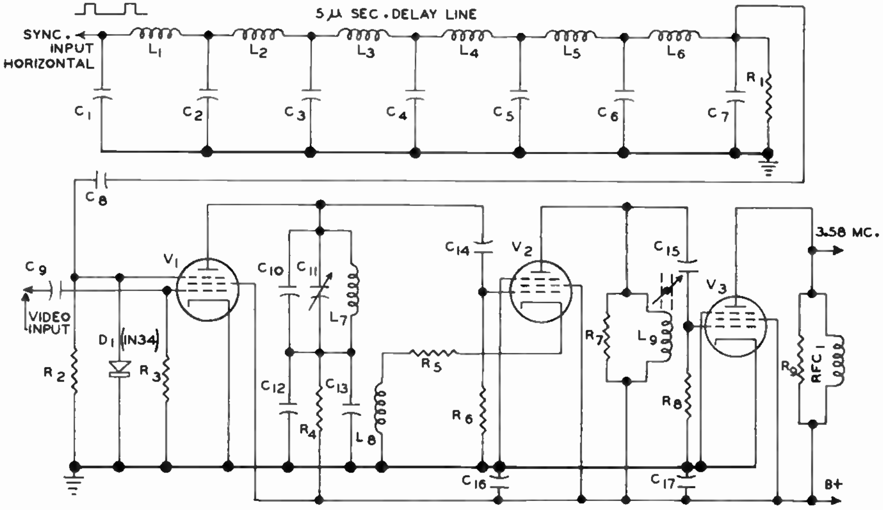

A variation of the ringing circuit. The 3.579545 mc signal is developed across a high Q circuit ($C_{10}C_{11}L_7$) instead of a crystal.

Note the absence of the color killer and 33° phase shift. The color killer is not necessary since with no burst, the burst amplifier remains cut-off. Since the receiver is a narrow band, no 33° phase shift is necessary at the hue control in the burst amplifier.

Normal operation of a balanced demodulator cancels out any of the 3.58 mc oscillator signal from V_6. Thus, no information passes through the color sync circuits or beyond the demodulators during a black and white reception.

CRYSTAL RINGING CIRCUIT

Figure 11 is the color synchronization circuit shown in the block diagram of Figure 1B. The circuit consists of a burst amplifier, a crystal ringing circuit, a phase shift amplifier, a limiter cathode follower, color killer doubler, and color killer. A constant amplitude 3.58 mc subcarrier of the proper phase is applied to the demodulators from this circuit.

As in the phase discriminator circuit, a gated amplifier is used to allow only the burst to be applied to the crystal ringing circuit. The gated amplifier V_1 receives the color burst from the video amplifier by means of the tuned transformer T_1. The secondary of T_1 is shunted by resistor R_1 to reduce phase shift.

Transformer T_2, the secondary of which is shown separately, is a winding on the horizontal output transformer. During horizontal flyback time a negative pulse is inductively coupled to the T_2 secondary. This pulse is applied to the cathode of V_1 to cause conduction at the instant the burst is present at the grid. The amplified burst is present across the plate tank circuit C_4 and the primary of T_3. Resistor R_4 is provided to reduce any phase shift in the 9 cycle burst by the tuned circuit.

The output of the burst amplifier V_1 is coupled to the crystal by transformer T_3. The crystal is operated as a series resonant circuit and an adjustable trimmer capacitor is provided to vary the resonant frequency. This provides a relatively wide range of adjustments so that the accuracy requirements of the crystal are less. In general, proper tuning results in a maximum output with minimum phase shift.

A train of oscillations is produced by ringing the crystal with a color burst. Since the burst is applied to the ringing circuit only during the horizontal blanking interval, some decay in the amplitude occurs during each scanning line. The amount of decay accompanied by phase shift during the line interval is related to the circuit Q. Generally, higher circuit Q is obtained by terminating the crystal with low resistances. Therefore, the secondary of transformer T_3 and resistor R_6 have relatively low resistance resulting in a more uniform output.

Although some phase shift does take place during the intervals between the color bursts, it is slight and it is corrected at the beginning of each scanning line. Therefore, the shift is not noticeable in the picture. The crystal is tuned so that the voltage across it is in phase with the burst.

The output of the crystal is applied to the cathode of a grounded grid amplifier V_2. Operated in this manner, when the plate circuit is tuned to resonance at the burst frequency, no phase inversion occurs in the signal between the cathode and plate. That is, when the voltage applied to the cathode is going positive, the signal at the plate is going positive, also. However, when the resonant circuit L_1C_8 is tuned to a frequency above or below 3.58 mc, the voltage at the plate shifts in phase with respect to the input signal.

Capacitors C_6 and C_7 prevent d-c from being applied to C_8 which is a front panel control. Also, C_8 is grounded on one end to prevent the r-f voltage from affecting the operator. C_8 is the hue control which is adjusted by the viewer for the desired reproduction of colors in the receiver image.

The phase of the subcarrier oscillator voltage in the transmitter is used as the reference from which the phase of the modulated subcarriers and the color burst is measured. The reproduction of the subcarrier in the receiver by the crystal ringing circuit is illustrated by the vector diagrams of Figure 12. As shown in the two Figures, the burst appears 180° out of phase with the reference subcarrier.

The voltage developed by the crystal in Figure 11 is in phase with the burst and, with respect to the reference (0 degrees), may be illustrated by the burst vector in Figure 12A, also. With the L_1C_8 tank tuned to 3.58 mc, the voltage at the plate of V_2 is in phase with the burst. The output of V_2 is applied to the grid of V_3 and its output is shifted in phase by 180°. Under these conditions, the output of V_3 is in phase with the reference, 0 degrees.

When the subcarrier is reinserted in the Q demodulator in phase with the reference, incorrect hues are reproduced. Also, in quadrature with the Q subcarrier, the I demodulator reproduces the wrong hue of colors. In the transmitter, the phase relationship of the subcarriers and the reference are as shown in Figure 12B. These same relationships must be retained in the receiver.

To accomplish this, the hue control, capacitor C_8, in the plate circuit of V_2 Figure 11, is varied until the output leads the input by 33°. This is illustrated by the dashed line vector located at 213° in Figure 12A. Applied to the grid of V_3, the phase is shifted 180° in the plate circuit, as shown in Figure 12B by the Q subcarrier vector.

The amplifier V_3, in addition to providing the necessary phase inversion of the sampling voltage, also serves as a limiter. When a burst is applied to the crystal ringing circuit a damped train of oscillations are produced. The build up and decay of the wave train during each interval provides a varying amplitude subcarrier. Other factors which cause variations are varying signal strength and noise impulses.

When large variation occurs in the sampling frequency, improper demodulation results which degrades the reproduced colors. To prevent this type of color distortion, tube V_3 is operated as a limiter. The output amplitude of V_3 is a fairly constant subcarrier of 3.58 mc regardless of normal input variations.

The output of V_3 is applied to a 3.58 mc cathode follower V_4. The 3.58 mc subcarrier for the Q demodulator is taken off at the junction of R_{14} and R_{15}. Variable inductor L_3 and C_{14} provide a 90° phase shift for the 3.58 mc subcarrier. Capacitor C_{15} is just a large coupling capacitor. Therefore, the I subcarrier is taken at the output of this cathode follower.

Also from the output of V_3 is a 3.58 mc pulse to a voltage doubler, labelled color killer doubler. A high voltage pulse is required to keep V_7 cut off so there is no voltage available at C_{22} to cutoff the demodulators. Capacitors C_{17} and C_{19} make up the voltage doubling circuit. Along with C_{18} and R_{19}, C_{18} forms a pi filter network. Thus, a high negative d-c is available to the high impedance load $R_{20}C_{20}$. During color telecasts even though a positive horizontal pulse is applied to V_7, it is not sufficient for conduction, hence, no negative voltage is developed across C_{22}. However when no 3.58 mc burst is present, no voltage is developed at the grid of V_7. A high horizontal gating pulse off the flyback transformer drives V_7 into conduction. Electrons flow through its plate through R_{21} and C_{22} to ground. Thus, the electrolytic C_{22} applies a high negative d-c voltage to the demodulator grids holding them cut-off. Therefore, no luminance information can pass through the color sync or color demodulation sections.

DEFLECTION SYSTEM

A color television receiver has two synchronization channels: (1) the color sync circuits and (2) the deflection sync circuits. The synchronization system used to control the beam deflection in the tri-color picture tube is the same employed in present day monochrome receivers.

The sweep sync voltages employed for color and monochrome transmission have the same wave shape and frequency. Although for monochrome, the vertical and horizontal sync frequencies may be 60 and 15750 cycles, for color the vertical sync must be 59.94 cps and the horizontal sync frequency is 15734 cps.

To assure compatibility of the present monochrome and color systems, synchronization must be maintained by the sync pulses contained in either signal for both type receivers. That is, the monochrome receiver deflection circuits must operate at the vertical frequency of 59.94 cps and a horizontal frequency of 15734 cps when receiving a color signal without circuit changes or manual adjustments. Conversely, the color receiver deflection circuits must operate at the monochrome sync frequencies when receiving a monochrome signal.

The sweep synchronization circuits in both the color and monochrome receivers operate equally well when receiving either type of signal. Since these circuits have been described in earlier lessons, they are not repeated here. However, a brief review of the overall deflection system, used in the color receiver, is given and illustrated by the block diagram of Figure 13.

The composite video signal, as indicated in the Figure, is applied to the block labeled sync clipper. This tube is biased well below cutoff by either a grid leak action or a fixed voltage. Therefore, only the positive peaks of the video signal, which consist of the sync pulses, cause conduction of the tube. The output of the sync clipper contains both the horizontal and vertical sync pulses.

In the following stage the vertical and horizontal sync pulses are separated and fed to their respective circuits. The integrated vertical sync pulse shown at the sync separator output is fed to the vertical oscillator. This waveform triggers the oscillator at the end of each field causing a new cycle to start. The frequency of vertical oscillator is 60 cps for monochrome signals, and 59.94 cps for color signals.

The vertical oscillator output voltage is a trapezoidal waveform which is required for magnetic deflection. It is increased in amplitude by the vertical output amplifier and coupled to the vertical deflection coils. In the color television receiver, a second waveform is obtained from the cathode of the vertical output tube and applied to a CONVERGENCE AMPLIFIER. The purpose of this parabolic wave-form is to control the three electron beams in the tricolor picture tube.

The second output of the sync separator consists of the horizontal sync pulses. These pulses are fed to an automatic frequency control (afc) circuit. Also, the output of the horizontal oscillator is fed back to this stage. The afc circuit compares the frequency of the oscillator to that of the sync pulses. When a frequency difference occurs, a d-c voltage is developed at the output proportional in magnitude and polarity to the frequency change.

Applied to the horizontal oscillator, this d-c voltage controls its frequency. The output of the horizontal oscillator is a trapezoidal wave-form at the horizontal sweep frequency. This wave-form is increased in amplitude by the horizontal output amplifier and applied to the deflection coils.

Although not shown in the block diagram of Figure 13, a flyback transformer is used to provide a high voltage for the picture tube. Also, a parabolic wave-form is obtained from the cathode of the output amplifier for beam convergence purposes in the tri-color tube. Both parabolic waveforms are often combined in the same convergence amplifier.

The timing of the horizontal output voltage relative to the incoming sync pulses is controlled by the afc circuit. Since this timing directly affects the relative position of the received color burst during the horizontal flyback period, stable operation of the afc circuit is particularly important.

None of the blocks of Figure 13 are circuits different from those found in black and white TV receivers. These were handled earlier in this training series. However, the convergence amplifiers are new circuits found in color TV receivers and they are described in detail in the following lesson. In fact, since the horizontal output amplifier plays such an important role in supplying gating pulses, it is also covered in further detail. The emphasis lies really on the voltages necessary for the picture tube.

* * *

IMPORTANT DEFINITIONS

AUTOMATIC PHASE CONTROL—(apc)—A circuit designed to maintain automatically the phase of an oscillator by comparing the phase of color burst to that of the oscillator output.

COLOR BURST—A synchronizing signal, consisting of approximately 9 cycles of the 3.579545 mc subcarrier frequency, which is transmitted to control the phase of the local subcarrier oscillator.

COLOR KILLER—A circuit designed to permit operation of the chroma channels of a color television receiver only during reception of a color picture.

CRYSTAL RINGING CIRCUIT—A method of color synchronization in which a train of oscillation is produced by ringing a high Q circuit with the color burst.

GATED BURST AMPLIFIER—An amplifier which is forced into conduction by a gating pulse during horizontal blanking time to separate the color burst from the composite video signal.

GATING PULSE—A pulse used to start, or stop, the conduction of a tube during certain timed intervals.

HUE CONTROL—In the color television receiver, a control by which the shade or hue of a color in the image may be changed.

PHASE CONTROL AMPLIFIER—In the color television receiver, a stage in which the phase of the output voltage may be varied with respect to the input.

PHASE SHIFT CONTROL—See hue control.

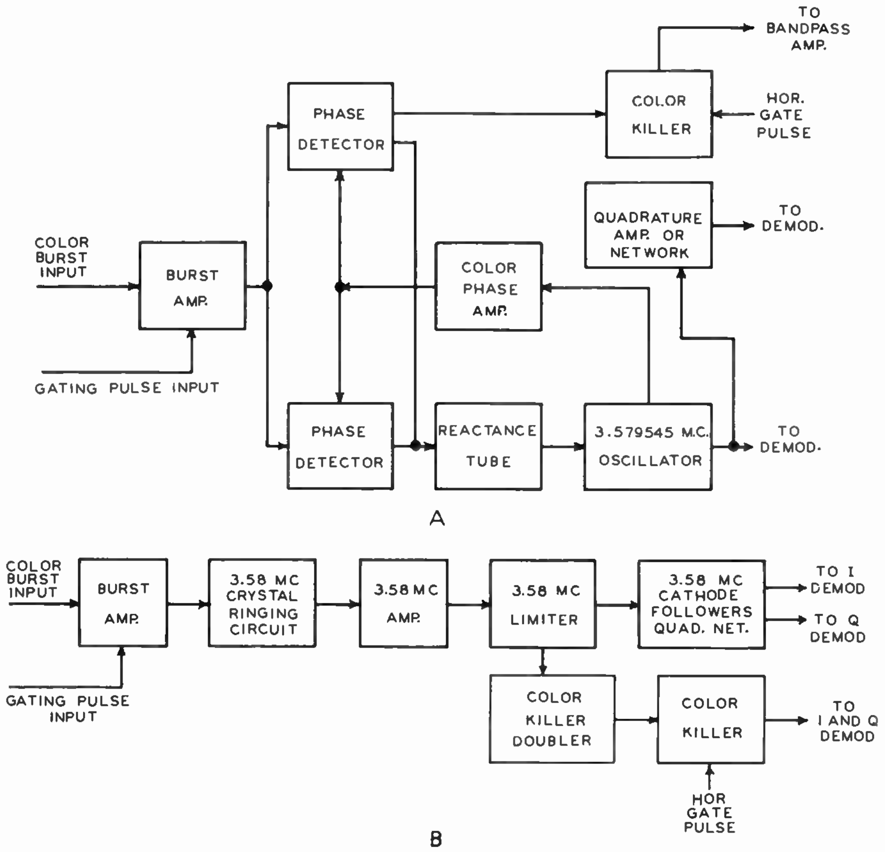

FIGURE 1

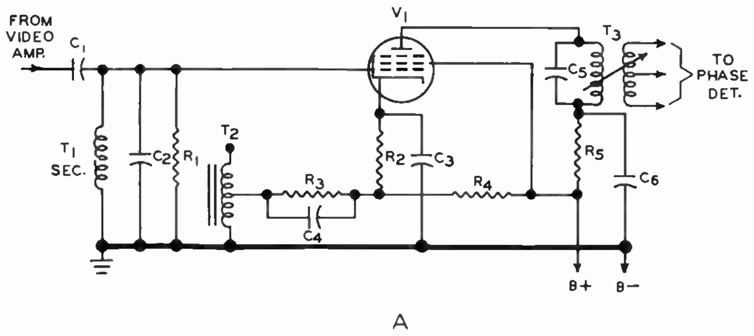

FIGURE 2

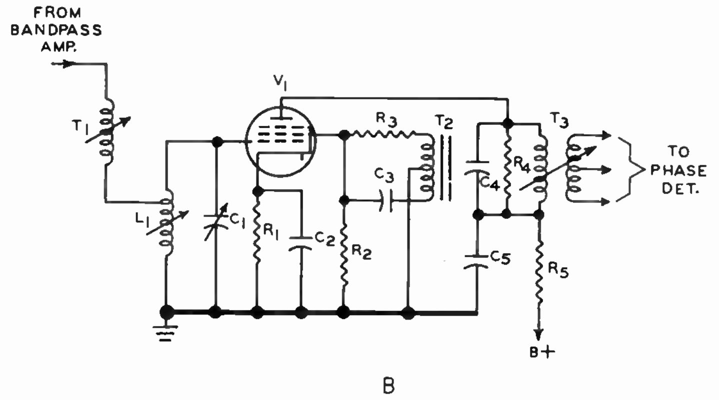

FIGURE 2

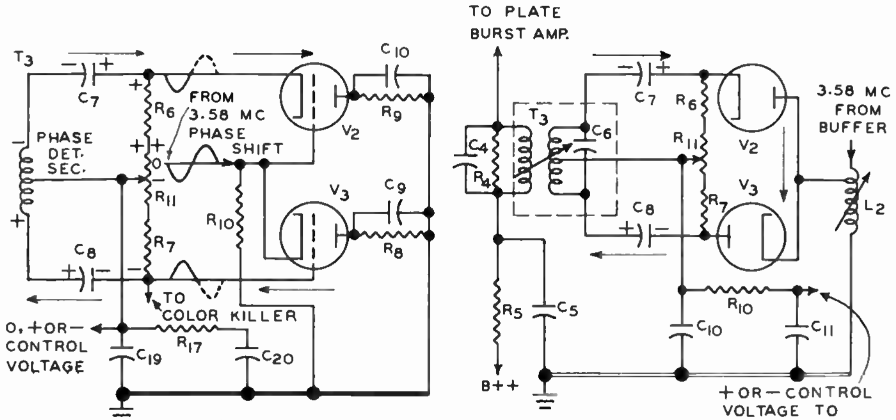

FIGURE 3

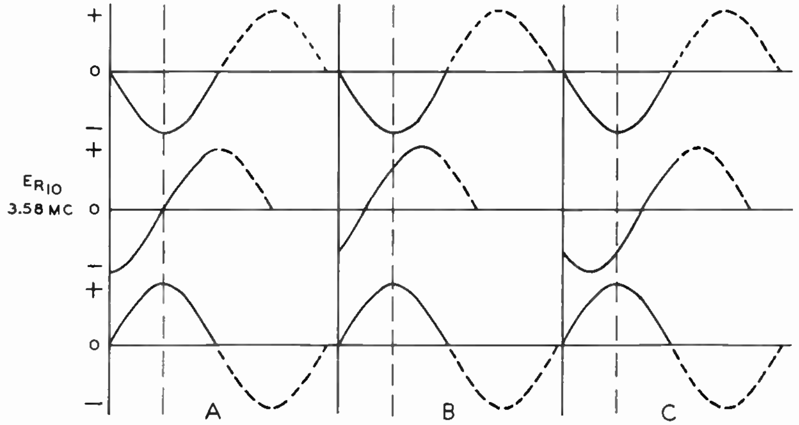

FIGURE 4

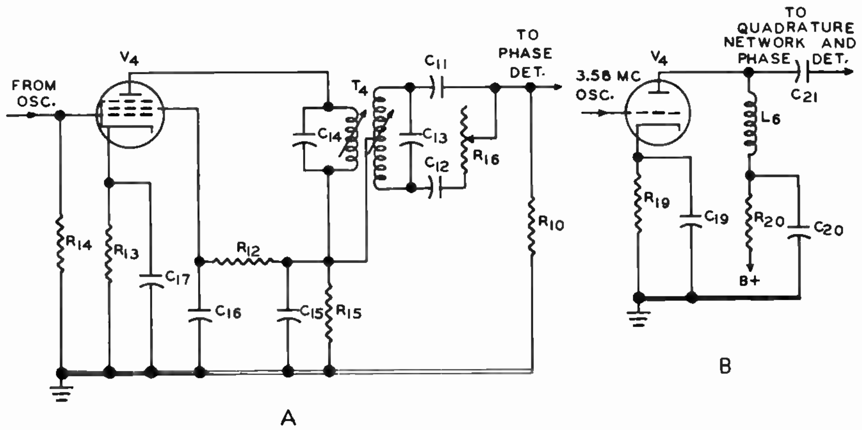

FIGURE 5

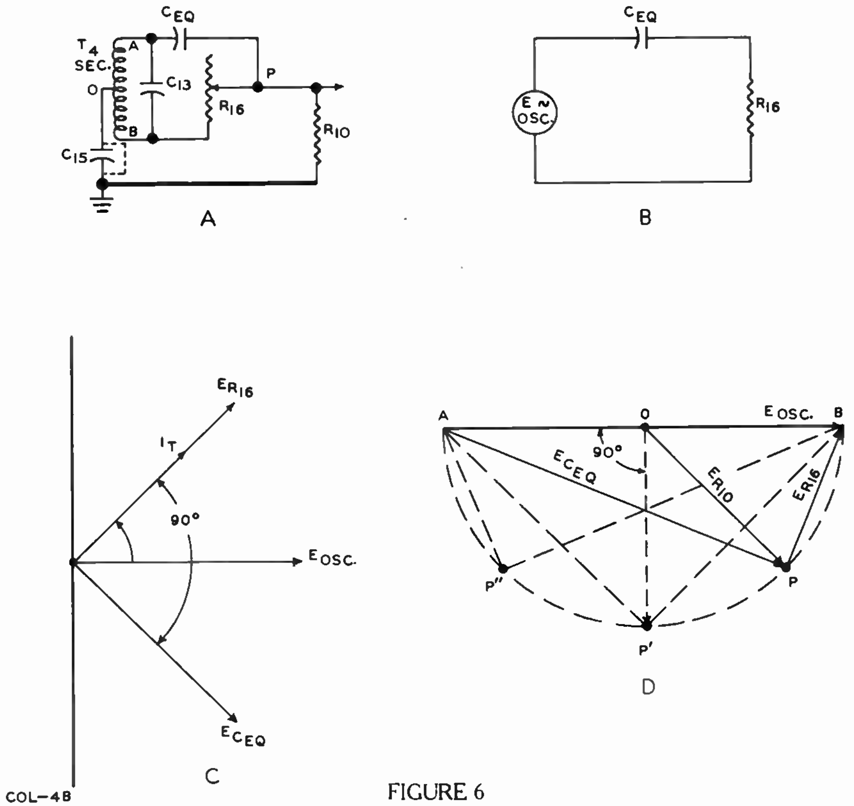

FIGURE 6

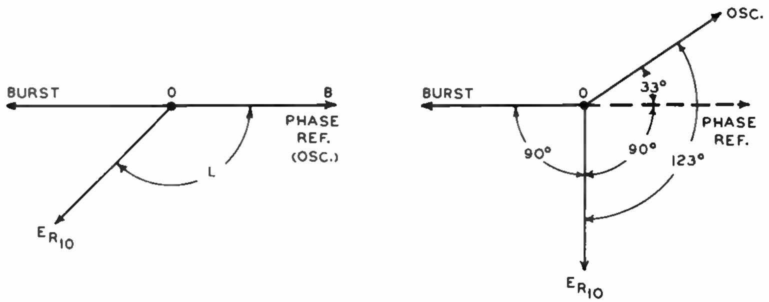

A FIGURE 7 B

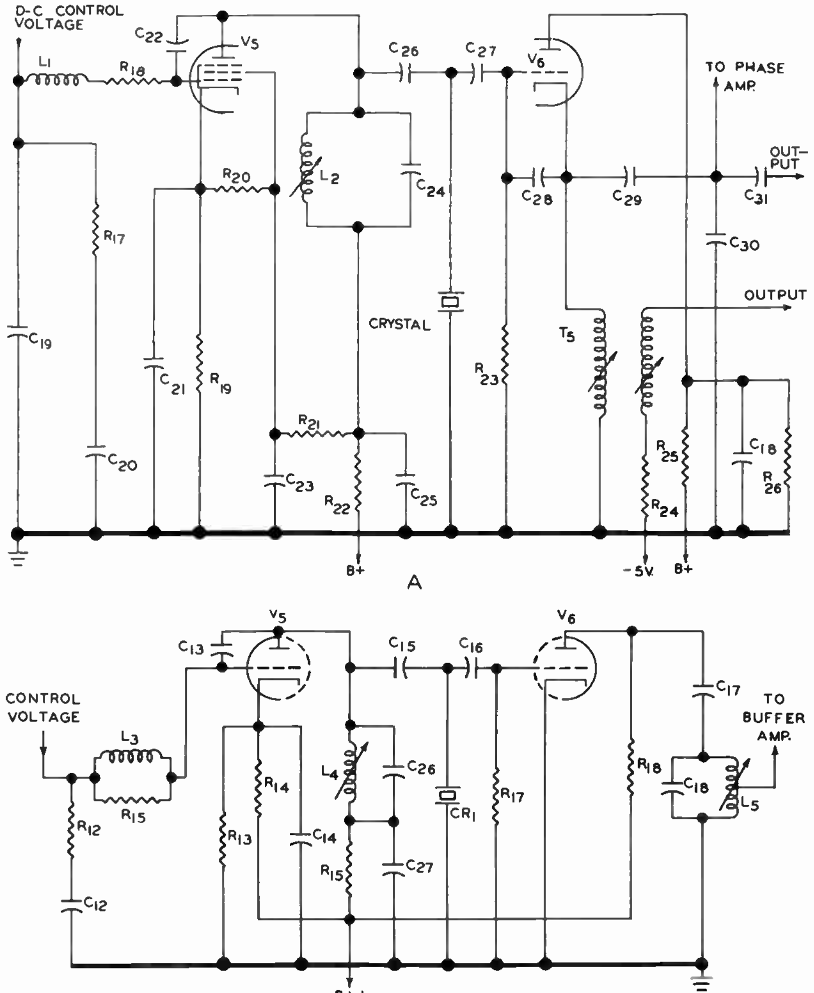

B
FIGURE 8

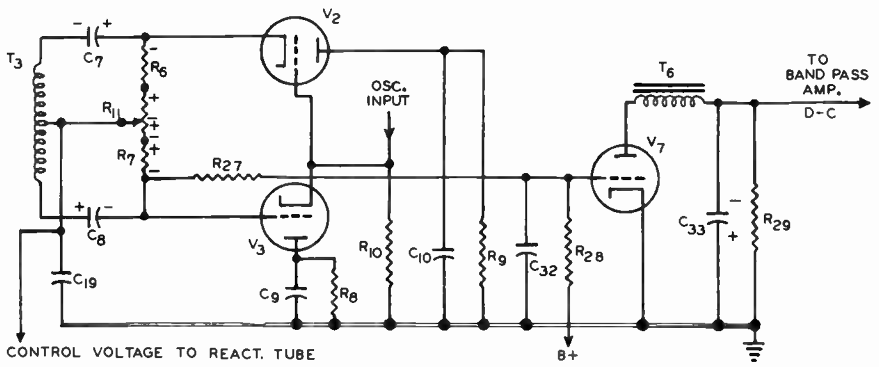

FIGURE 9

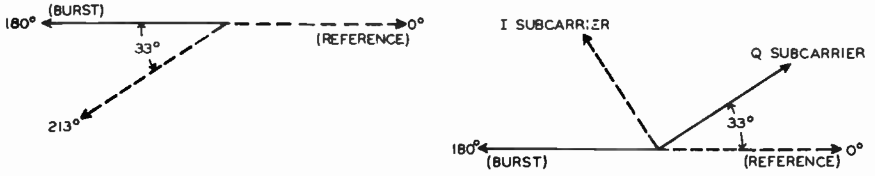

A B

FIGURE 12

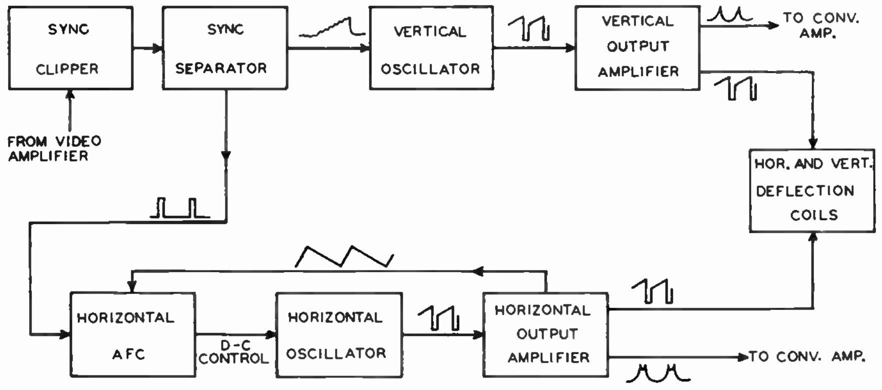

FIGURE 13

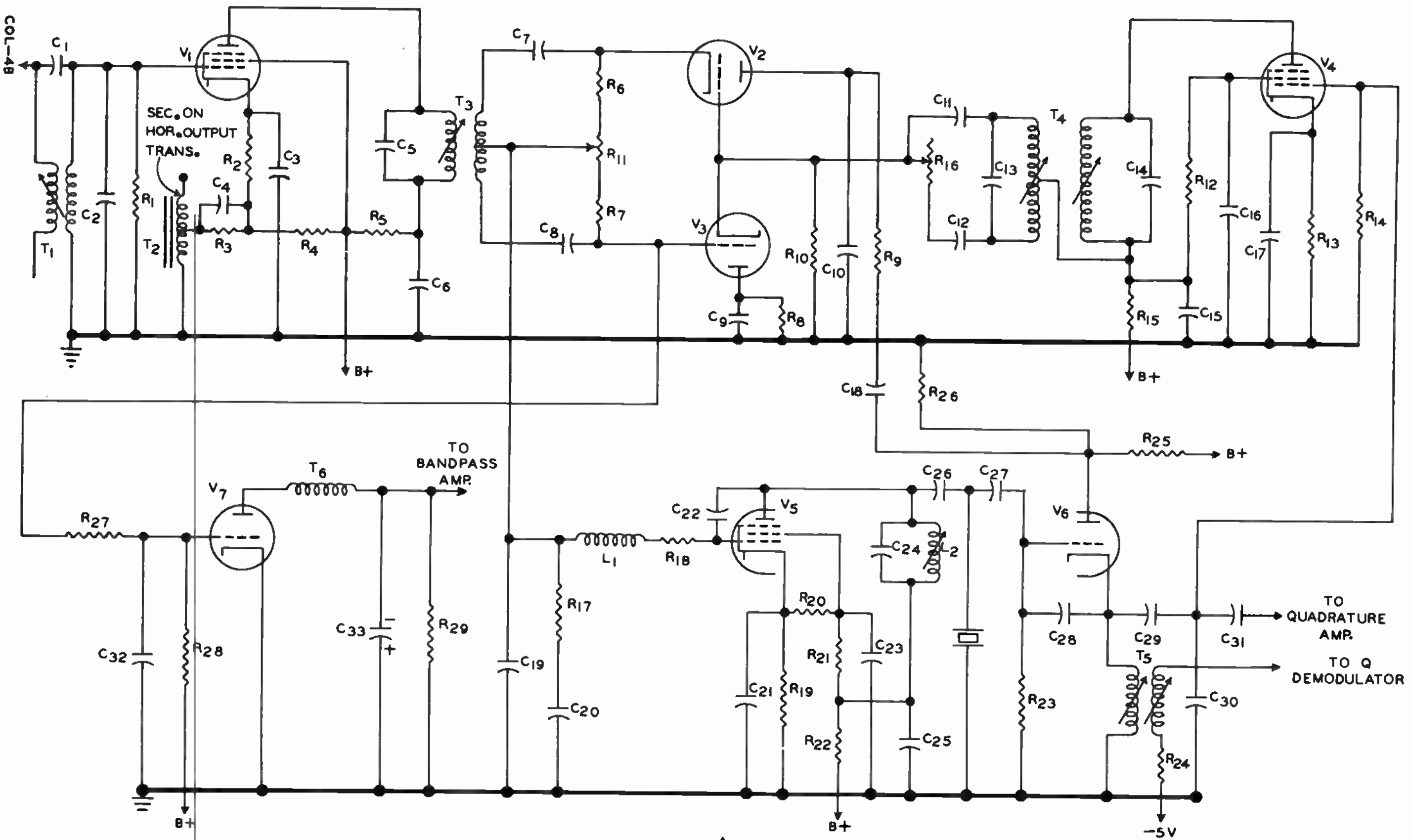
COL-48
C1
V1
SEC. ON HOR. OUTPUT TRANS.
T1
C2
R1
T2
C4
R2
C3
R3
R4
R5
B+
T3
C5
C6
C7
R6
R11
R7
C8
V2
V3
C9
R8
R10
C10
R9
C11
R16
C13
C12
T4
C14
V4
R12
C16
C17
R13
R14
R15
C15
B+
C18
R26
R25
B+
V7
T6
TO BANDPASS AMP.
R27
C32
R28
B+
C33
R29
C19
L1
R18
R17
C20
C22
V5
R20
C21
R19
R21
R22
B+
C23
C25
C26
C27
C24
L2
V6
C28
C29
C31
T5
C30
R23
R24
-5V
TO QUADRATURE AMP.
TO Q DEMODULATOR

A
FIGURE 10

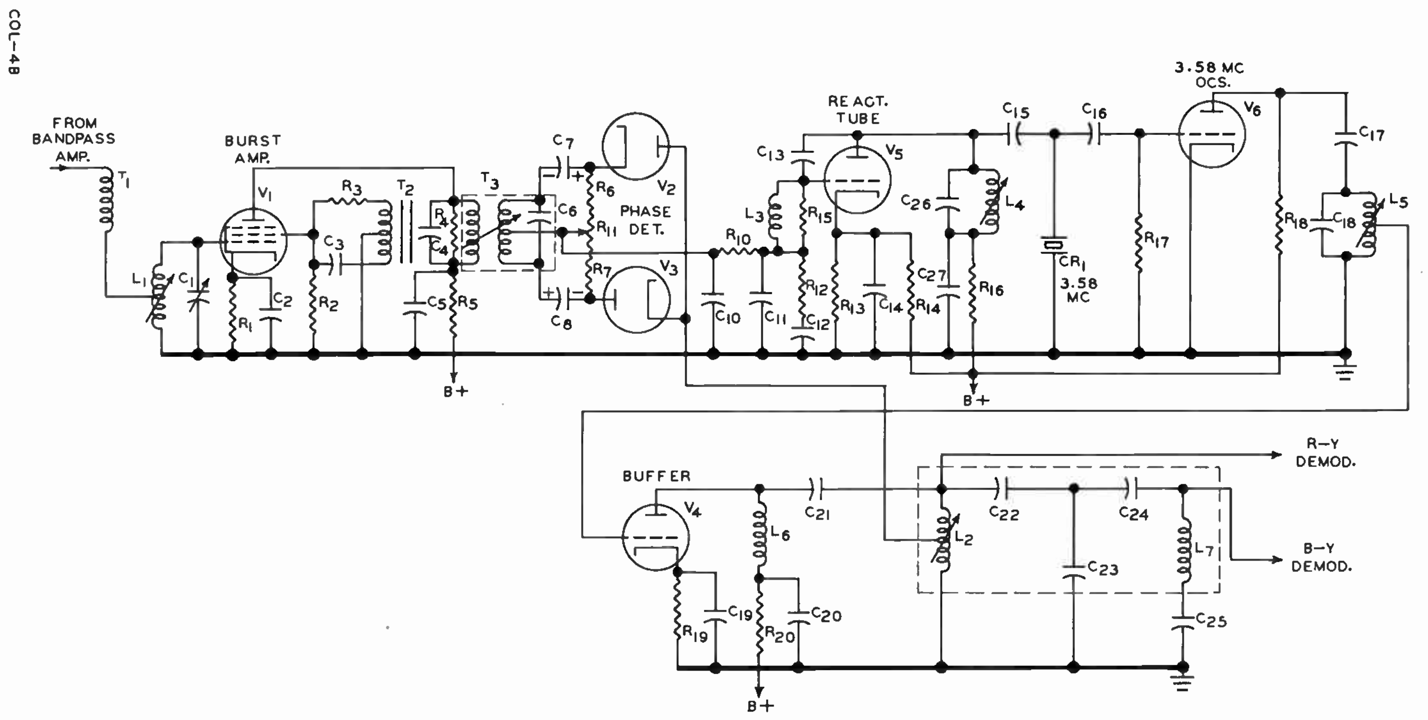

B

FIGURE 10

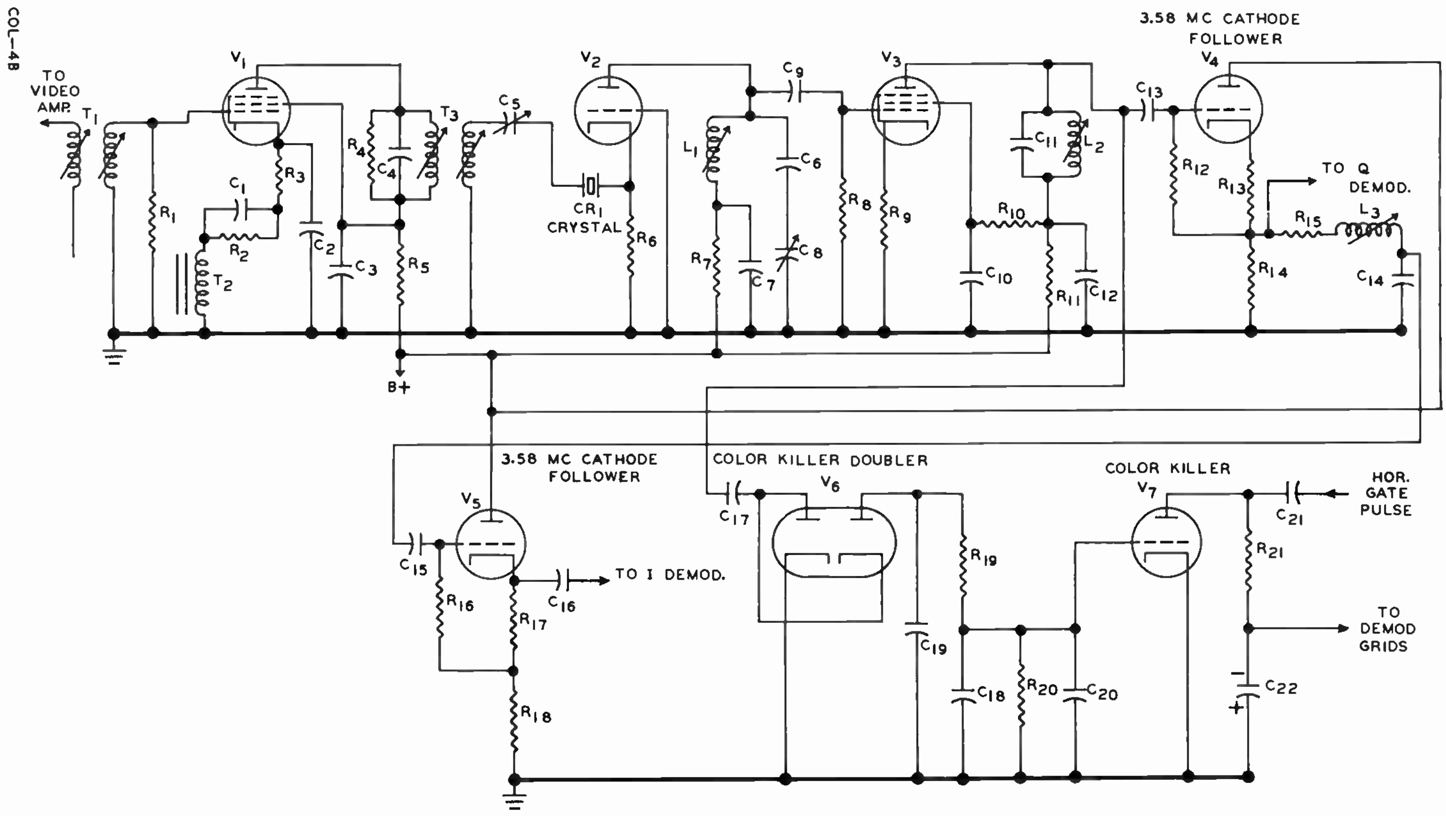

FIGURE 11

DeVRY Technical Institute

Formerly DeFOREST'S TRAINING, INC.

4141 WEST BELMONT AVENUE　　CHICAGO 41, ILLINOIS

QUESTIONS

Color Sync Circuits—Lesson COL-4B

1

How many advance Lessons have you now on hand?........................

Print or use Rubber Stamp.

Name.. Student No.......................................

Street..Zone........................... Grade.......................................

City...State....................................... Instructor.......................................

Write your answers on the "Ans." line below each question. If more space is needed use reverse side of this page.

1. In color transmission, what four components make up the composite video wave?

Ans. ....

2. In a color receiver, what type of stage is employed to separate the color burst from the composite video signal?

Ans. ....

3. What value of oscillator voltage results in the appearance of no d-c correction voltage across capacitor C_{10} of Fig. 3A?

Ans. ....

4. With the phase relations shown in Figure 4C, is the produced d-c correction voltage positive or negative with respect to ground?

Ans. ....

5. In Figure 5A, what name is applied to the variable resistor R_{18}?

Ans. ....

6. What is the purpose of the reactance tube of Fig. 8A?

Ans. ....

7. The reactance tube of Figure 8A functions as what type of variable circuit property?

Ans. ....

8. In the circuit of Figure 10A, what is the approximate phase range, in degrees, provided by V_1?

Ans. ....

9. When receiving a color telecast, a television receiver employs what vertical and horizontal sweep frequencies?

Ans. ....

10. What are the names of the two synchronization channels in a color TV receiver?

Ans. ....

FROM OUR *Director's* NOTEBOOK

THE TOOLS OF YOUR TRADE

The late Walter Chrysler attached so much importance to his machinist's tools that before he died he had them put on display in the Chrysler Building tower. They are still there, a simple, fitting monument to a man who did so much for the automobile industry.

But one thing that couldn't be put on display was the mind and the drive that helped Chrysler become famous. In his ability to think a problem through, then get the job done lay his real genius.

Now all of us won't become Chryslers, that's a certainty. But that doesn't mean we should stop trying. In your own business, you have your multi-meter, oscilloscope, etc.—the tools of YOUR trade.

But, more important, you are acquiring the training which can help you use those tools more efficiently. Now . . . cultivate, at every opportunity, the ability to think a problem through and to get the job done. Do this—and you'll have your feet squarely on the same road that has lead to some of America's outstanding personal successes.

Yours for success,

W. C. DeVry

DIRECTOR

PRINTED IN U.S.A.

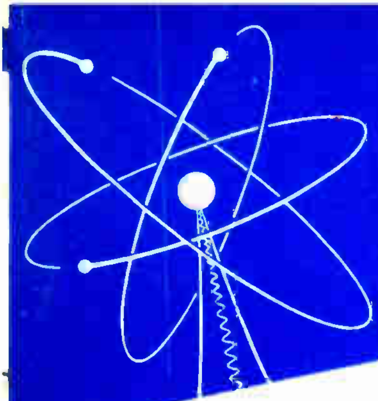

SHADOW MASK TUBE CIRCUITS

Lesson COL-5B

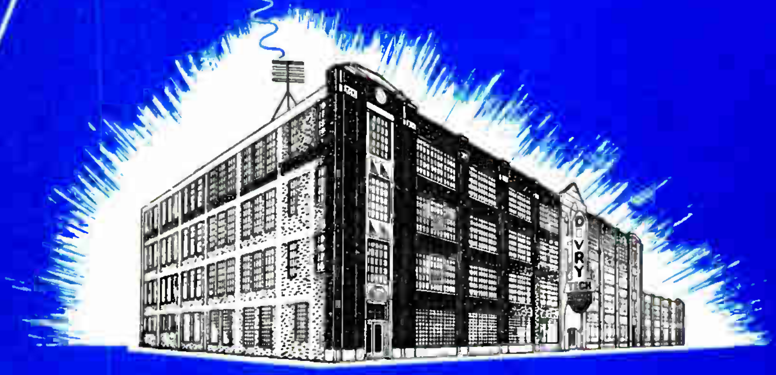

DeVRY Technical Institute

4141 W. Belmont Ave., Chicago 41, Illinois
Formerly DeFOREST'S TRAINING, INC.

COL-5B

SHADOW MASK TUBE CIRCUITS

Contents

Your education never stops. You're always learning. Reserve judgment on your fellow man. Look for the best in everybody but don't allow first impressions to sway you.

—Branch Rickey

SHADOW MASK TUBE CIRCUITS

One of the major contributions toward making color television broadcasting a reality has been the development of the shadow mask tri-color picture tube. Before this tube became available color television was in use, but the reproduction unit was a rotating color filter in front of an ordinary picture tube.

This system is very satisfactory for closed circuit television. Therefore, it is used in those industrial television applications where color is important. However, it does not lend itself to a compatible system. That is, a television broadcast suitable for this rotating filter cannot be received on conventional black and white receivers without considerable modification. In addition the mechanical disc tends to make the receiver too bulky for good home viewer acceptance.

Since the shadow mask tube is so important to color television broadcasting, we must understand those circuits needed to reproduce a color picture on such a tube.

PICTURE TUBE CIRCUITS

Actually every circuit in the receiver cooperates to get the signal to the picture tube. The final signals in the matrix are combined properly to get the original colors of the transmitted scene. Once the signal arrives at the picture tube, the same sequence of the scanning must be applied as at the transmitter. Due to the construction of the picture tube, focus and convergence compensating circuits must be added along with the usual deflection system found in monochrome receivers.

In an effort to reduce costs and make servicing easier, TV manufacturers are constantly seeking to reduce the number of parts. Essentially this is done by reducing the number of receiving tubes used in the set. Associated with each tube are resistors, capacitors, and inductors, which then are not needed. Thus, the total number of parts is reduced even further by eliminating entire stages.

At present, color TV is rapidly progressing along these lines. As a result, a number of manufacturers are changing their receivers. Primarily, the change is taking place in the circuits associated with the picture tube.

It is at this point we take up the signals fed from the demodulators to the picture tube to recover the original E_R', E_G', and E_B' camera voltages. These three voltages finally recombined within the picture tube reproduce the original scene colors at the screen.

SHADOW MASK TUBE CIRCUITS

4141 Belmont Ave.

ELECTRONICS TELEVISION
DTI
DeVRY Technical Institute

Chicago 41, Illinois

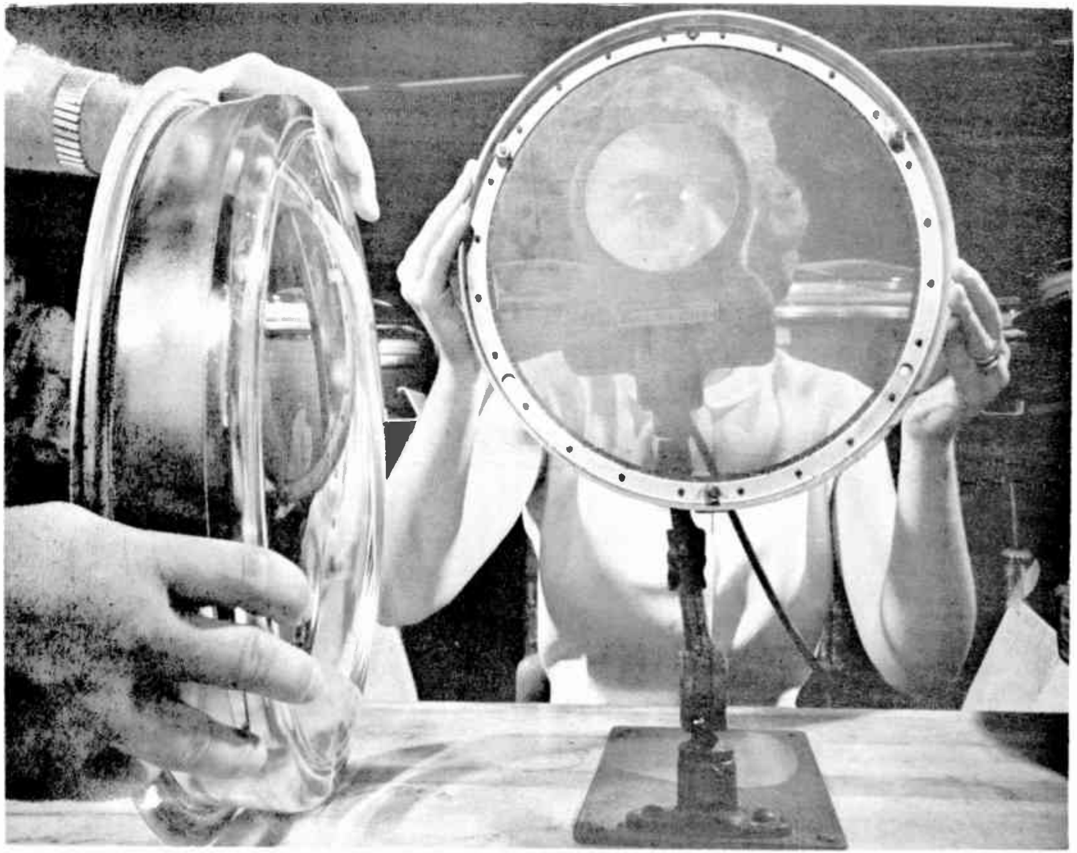

On the left, a face plate and on the right a shadow mask of a color picture tube are being inspected at the factory.

Courtesy RCA Victor

The block diagram of Figure 1A is general enough to cover all receiver types adequately. The demodulated signals I and Q, or R-Y and B-Y are combined with the luminance signal Y at the matrix, and fed to the cathodes and control grids of the picture tube.

Some narrow band chrominance receivers do not use a separate matrix. The demodulators may be directly connected to the picture tube. Other receivers may have separate green, red, and blue output amplifiers but do not have separate green, red, or blue adder circuits or separate d-c restorers.

Another important change occurs in the deflection circuits. Here many variations are possible since there are two main types of picture tubes. However, whether all the circuits are separate as shown in the block diagram or some are combined, the picture tube requires these voltages for deflection to reproduce the colors present in the original scene.

As a general statement, wide band chrominance receivers have separate stages as shown in Figure 1A while narrow band chrominance receivers use combination stages.

In the deflection circuit of Figure 1 the vertical and horizontal output amplifiers were described in previous lessons. The deflection coils are similar to those in a black and white receiver. However, the vertical output amplifier also feeds the vertical convergence section and some of the vertical output wave-form is applied to the d-c focus rectifier stage.

Just like a black and white receiver, the horizontal output amplifier serves many other stages. A damping tube is one of the stages and its operation is similar to that in a black and white receiver. High voltage is created off the flyback transformer of the horizontal output amplifier and is fed to the high voltage electrodes at the picture tube. In addition, a voltage divider tap

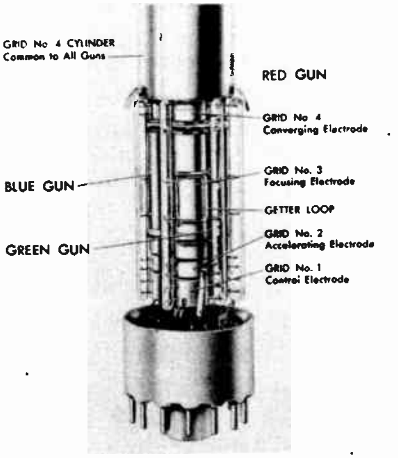

Three electron guns in a tricolor picture tube.
Courtesy RCA Victor

provides the d-c convergence voltage. A horizontal output waveform is fed to the horizontal convergence section.

A separate focus rectifier is used to get high d-c focus voltage. The a-c vertical and horizontal wave-forms from the convergence sections are added to d-c focus voltage applied to the focus electrode at the picture tube in order to maintain focus throughout the entire sweep.

Added to the d-c convergence voltage are larger a-c vertical and horizontal convergence waveforms than added to the focus voltage to maintain proper convergence of the beams during the vertical and horizontal sweep time.

RECEIVER MATRIX

In a number of wide band chrominance receivers, separate **adders**, output amplifiers, and d-c restorers exist as shown in Figure 1A. In these receivers, there are three input voltages E_I', E_Q' and E_Y' of positive and negative polarity. E_I' and E_Q' and their percentages listed as decimals are shown in Figure 1B. In each column, the proper polarity and percentages of the incoming voltage are combined in circuits such that the horizontal row combinations produce the color-difference or color-minus-brightness voltage at the right. For instance, to reproduce $E_R' - E_Y'$ requires 0.945 times E_I' and 0.621 times E_Q'. Along with these voltages and applied to each adder is the luminance voltage E_Y'. Then, E_Y' added to $E_R' - E_Y'$ results in E_R' at the output of the red adder. This type of addition also occurs in the remaining two adders to give an output of E_B' and E_G'.

In brief, the purpose of the adder is to reconstruct a voltage containing both luminance and chrominance. Then the voltage contains the original hue, saturation, and brightness of an original primary color.

Green Adder

Input signals to the matrix are fed through gain adjusting circuits. Figure 2 shows a circuit composed of R_1, R_2 and R_3 in the green adder amplifier. The polarities of the voltage signals are a plus E_Y', and a negative E_I' and E_Q'. To get E_G' at the output of the green adder circuit, the relative amplitudes must be as indicated in Figure 1B.

Since the red phosphor at the picture tube screen requires the maximum gain to be excited, a gain control R_6 is incorporated in the green amplifier to reduce the amplitude of the green signal to get the proper light balance at the picture tube. C_1 is a blocking capacitor isolating the d-c from the cathode of V_2 and the demodulators or other stages that are directly coupled to the matrix. C_2 and R_7 form the grid-leak bias circuit for V_1. Cathode bias also is provided by R_8 and C_3. Resistance-capacitance coupling to V_2 is provided by C_4 and R_{10}.

Since high and low frequencies are employed in these amplifiers, both types of compensation are used. L_1 in the plate circuit of V_2 compensates for the high frequencies. R_{12} and C_5 in the cathode of V_2 provides low frequency degeneration, some of which is fed directly to the green adder grid through R_5. R_{11} provides degeneration for V_2. The green signal is coupled by C_6 to the second or control grid of the picture tube.

Blue Adder

The blue adder and output amplifiers are identical to the green adder and output amplifiers except for R_1, R_2, R_3 which adjust the relative gains of E_Y', $-E_I'$, and E_Q'.

When the proper percentages of the voltages of E_I' and E_Q' are added as in Figure 1B, the result is $E_B'-E_Y'$. This is the blue color difference signal. The only components present in the color difference signal are its hue and saturation. Therefore the brightness component E_Y' must be added to complete the color signal E_B'.

Red Adder

The red adder circuit and output amplifier is identical to the green adder and output amplifier with exceptions that the input resistors R_1, R_2, and R_3 again have different values. However, there is no gain control, because the red output stage is operated at maximum gain to excite the red phosphor. The input signals to the three resistors R_1, R_2, and R_3 are E_Y', $.945E_I'$, and $.621E_Q'$.

Now if the controls were set properly at the picture tube, three voltages of one volt amplitude would produce a white light. To produce another color different than white, a different proportion of one of the colors is chosen. The resulting color is determined by the predominant hue although the saturation or the brightness may not be of the same magnitude.

D-C RESTORERS

A d-c restorer is a clamp circuit which re-inserts the direct current component of the signal lost through coupling devices. Signals were directly and capacitively coupled into the matrix, and from the output of the adders, the signals again are resistance-capacitance coupled. Hence, the d-c level at which the cameras of the transmitter picked up the original color information has been lost in the receiver.

This d-c level is re-inserted by the circuit shown in Figure 3. If it were not, the average brightness level as well as the chrominance information will be at difference levels producing varying brightness, hue, and saturation.

The reference level for the brightness component at the transmitter is approximately 70% of the peak carrier amplitude. This is the black level which causes zero brightness or a "black" screen. This specification is the same for monochrome receivers.

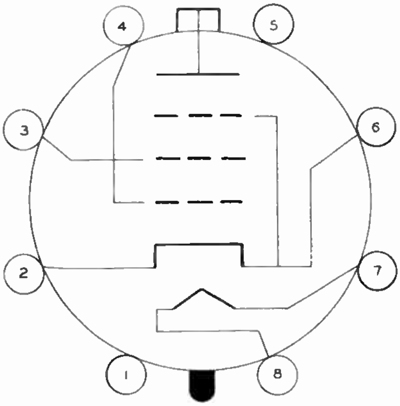

Basing diagram of bottom view of 6BU5 beam pentode tube used as high-voltage regulator in TV.

Pin connections are: 1—NC; 2—cathode and beam shields; 3—grid No. 2; 4—grid No. 1; 5—NC; 6—cathode and beam shields; 7—heater; 8—heater; cap-plate.

Since proper contrast of "blacks" and "whites" must be maintained over a relatively long time interval, the bias at the picture tube is controlled by a d-c component.

In the d-c restorer, the polarity of the signal voltage must be correct to drive the picture tube grid negative in order to produce a "black' screen. The pulses of the demodulated signal must be negative on the control grid. Since each amplifier stage normally reverses polarity by 180 degrees, whether an odd or even number of amplifier stages is required between the video detector and control grid is determined by the polarity of the detector signal output.

Referring to Figure 3, with no signal from the demodulators, bias is established by the cathode circuit R_9 and R_{10}. At this time the control grid is more negative than the cathode since Point B is at a lower positive voltage with respect to ground than Point A. Part of the voltage at point B is taken off the series-parallel combination of R_4, R_5 and R_6. The bias for the tube is the difference of potential of point C and point A. Capacitors C_1 and C_2 block the d-c from the previous amplifier stages.

With no signal input, the voltage at the plate of the green output amplifier is at a constant value. Capacitor C_2 charges up to this value through R_6, R_5, R_3 and R_1. Capacitor C_1, resistors R_2, R_3, part of R_5, and part of R_6 form a grid leak circuit for the picture tube. Capacitor C_1 also charges up to the same voltage as C_2. So with no signal, no voltage appears across R_3 once C_1 and C_2 are charged. Point D then is at the same potential as Point C and the bias for the tube is as stated before.

When a signal is fed through the receiver, the plate voltage of the green output stage varies about the no signal plate voltage point. This voltage is applied across the grid leak capacitor C_1 as well as across C_2.

In negative signal transmission, the darker the televised scene the smaller the amplitude of the composite signal. A smaller voltage means less variation between the average signal level and the negative blanking pulses. Therefore the blanking pulses cause the plate of the green output amplifier to change less. The discharge of capacitor C_2 is less.

After the expiration of the blanking pulse, the plate voltage rises only a small amount. Therefore, the average bias on the grid changes very little from the no signal value and the picture tube remains near cut-off.

During the transmission of a bright scene, the composite video signal is larger in amplitude than it is during a dark scene. The negative pulses cause V_1 to conduct and discharge C_2. At the expiration of the blanking pulses, the plate voltage rises and C_2 charges through R_3. The polarity of this voltage is such that point D becomes positive in respect to point C which reduces the bias on the CRT and causes the average brightness to increase. The voltage developed across R_3 will be directly proportional to the average conduction of V_1 which will be directly proportional to the average amplitude of the composite video signal at the plate of the green output amplifier. The average amplitude of the composite video signal will, of course, be proportional to the average brightness of the scene being televised.

If the average illumination of the scene being televised reduces, the amplitude of the composite video signal reduces and results in a reduction of the changes in plate voltage of the green output tube, and less voltage across R_3.

L_1 provides high frequency compensation. Resistor R_4 limits the current through the diode V_1 during conduction. The capacitance of V_1 is isolated from the plate-cathode circuit of the green output amplifier.

As described here, the d-c restorer circuit is called an AUTOMATIC BRIGHTNESS CONTROL circuit.

Since there are three output amplifiers there are three automatic brightness control circuits, one for each control grid—green, red, and blue. All color TV receivers have three brightness controls.

Figure 4 shows all three d-c restorer circuits. The blue d-c restorer circuit shown in Figure 4 is connected across points E and F of Figure 3. A blue background control takes some positive voltage off the brightness control as does the green background control. The blue and green background controls function as blue and green brightness controls.

Since the blue d-c restorer circuit is identical to the green, the operation of the circuits are the same.

The red d-c restorer circuit shown in Figure 4 shows the plate of its diode going directly to the arm of the brilliance control. The operation of the red d-c restorer is identical to the previous two.

Since the red phosphor must be driven the hardest, the red d-c restorer controls the main brightness. It is adjusted before the other two since it also determines how much bias is on the blue and green grids. This control is more properly called the master brightness control.

Screen grid control R_7 in Figure 3 controls the accelerating voltage applied to the "green" electron beam. It also prevents the interaction of the control grid and the anode voltage.

An alternate adder circuit is shown in Figure 5. In this color TV receiver circuit, no adder tube is used to combine the input signals Q, I, and Y of proper polarity. There are no gain controls in the blue and green output amplifiers. Instead, each stage has different plate load resistors which keeps the relative gains fixed. For example, since the red amplifier has the highest equivalent plate load resistance, its gain is still the highest.

The d-c restorer circuits and the d-c control circuits, and the picture tube, are almost identical to those of Figure 4.

In other receivers not having separate adder, output amplifiers, or restorer circuits, there are corresponding controls for the brightness, that are referred to sometimes as blue-difference or green difference controls since the luminance voltage E_Y' is added in the electron stream of the color picture tube. Again the master brightness is adjusted first for the same reason as before.

COLOR PIX TUBES

Color picture (pix) tubes already in commercial production are of two types: electrostatic (ES) convergence and electromagnetic (EM) convergence. These differences are best explained later when the specific tubes are met. In so far as the first type is concerned, these electrostatic convergence tubes are rapidly being obsoleted since they have a 12″ viewing area instead of the larger electromagnetic convergence tubes which are equivalent to a 21″ black and white TV pix tube.

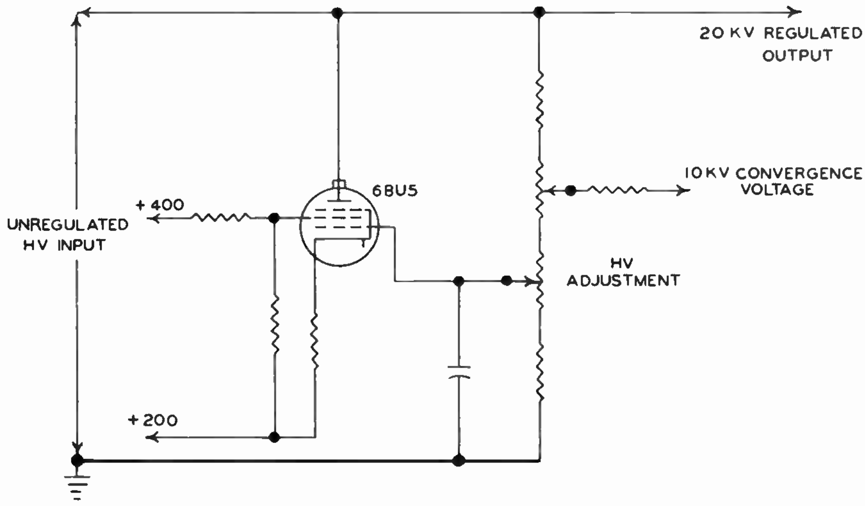

The 6BU5 tube is a low current, h-v beam pentode used here as a shunt regulator in a color TV receiver. About 30KV unregulated h-v is the maximum input.

However, the circuits of the receivers using an ES convergence type tube are practically identical to those having an EM convergence tube. Outer physical appearance of both tubes is alike. Chart 1 at the back of the book lists the outer physical components required for various tubes.

Common to both types of tubes are the three electron gun assembly, purity coil, and the usual type of deflection yoke. Additional mechanical hardware mounted about the tube differs because of the type of convergence as well as the manufacturer's preferences.

Since the ES convergence tube is becoming obsolete, we will describe first the EM convergence tube which is so popular.

EM CONVERGENCE TUBE

Inside and out of an EM convergence picture tube of Figure 6 are a number of components. These are its electron gun, dot screen, shadow mask, convergence assembly, blue corrector pole, rim corrector magnets, mu-shield, purity coil, and deflection yoke. The electron gun, dot screen, shadow mask, and part of the convergence assembly are inside the picture tube, while the remaining components are external. Rubber insulating shields are carefully located around the ultor to provide safe handling. Magnetic shields also are used to prevent stray fields from disturbing the electron beams.

There are three electron guns which are electrostatically focused just as in a black and white tube. Over the blue electron gun is located a blue corrector permanent magnet. Just a little past the focus electrodes is located a coil of wire called the purity coil. Beyond it is the convergence coils and shield assembly. Both of the latter may be enclosed by a cylinder of high permeable metal to ward off external magnet fields, since both the purity coil and convergence magnets affect the beams through their own magnetic fields. Mounted up against the flare of the neck are the deflection yoke and its magnetic shield assembly.

Just like a black and white tube, the aquadag coating extends almost to the neck. To keep high voltage from spraying all over, an insulating coating covers the aquadag part of the way. Actually, the picture tube envelope comes in two physical separate glass pieces. They are joined at the high voltage terminal which is their junction and is a metal ring referred to as the ultor anode. This is connected to approximately 25kv of the regulated high voltage power source developed in the usual manner with a flyback transformer. A high dielectric plastic shield covers this ring when the tube is mounted.

Inside the tube and mounted about the three electron guns are three convergence high permeability pole pieces shown in the inset drawing of Figure 6. Also, of high permeability and forming a closed magnetic path, is the pole piece used with the blue corrector pole section shown in the inset with the other pole piece.

Placed inside the glass section at the very front of the tube is a shadow mask. It is a piece of iron alloy with holes in it which allows the phosphor dot screen printed like ink on the inner face of the tube to be activated in the proper manner. Both shadow mask and face glass are curved the same way. All these component functions are now taken up one at a time.

Base Connections

Base pin connections for both the 19″ and 21″ EM convergence tubes are shown in Figure 7. It is a 14 pin base adopted by TV manufacturers. Note that the metal flange or ultor is grid number 4 and 5, not pins 4 and 5. The heater serves all three cathodes.

Pin 9 is the electrode which electrostatically focuses the three beams. Thus, each gun has its own heater (internally connected in parallel), cathode, control grid, and accelerating electrode. Common to all three beams are the focus and high voltage electrodes.

Electron Gun Assembly

Shown in Figure 8 are the three guns and mountings forming the electron gun assembly. Three electron guns are placed 120° apart from each other with each of the guns slightly aimed 1° toward a common center of the tube. Each gun is at the corner of an equilateral triangle, that is, they are the same distance apart from each other. Each gun is very similar to the gun currently used in black and white pix tubes. The getter loop holds the "flashing" materials which eliminate harmful gases within the tube. In receiving tubes, the getter is usually in a small cup.

Blue corrector poles are in two sections, one mounted above and the other below grid 3 of the blue gun. Placed directly in front of grid 4 of each gun are the pole pieces of the convergence coils. Therefore, as shown in the lower inset drawing of Figure 6, the beam from each gun passes through only its own convergence magnetic field.

DOT SCREEN

In the large screen color tubes, three phosphors are applied onto the inner front glass face in the form of small dots. Each of the three phosphors emits one kind of light. As shown in Figure 9A the three dots red (R), green (G), and blue (B) are placed next to each other so each dot just touches the other two colors. Several hundred thousands of these dot trios make up the entire dot screen. As you see, each set or two is arranged to consist of a R, G, and B dot. Each dot in this triad of colors or dot trio occupies the same area. The center of each dot is the same distance from the other two centers within the dot trio.

Every dot trio is identical, with the centers of each forming an equilateral triangle. To keep the unused area small between dots to prevent black spaces on the screen, the next trio is placed next to the first so that the center of any of its dots forms an equilateral triangle with the centers of the dots of the first set.

In Figure 9A, suppose we had picked three dots B_1, R_1, and G_1.

If the next set of dots must have its centers form an equilateral triangle and still allow the smallest space between dots, they would of necessity be G_1, R_2, and B_2. You will notice that the only dot touching the blue and green dots is a red dot. A dot of one color never touches another dot of the same color.

With three beams of electrons simultaneously striking a trio of dots R_1, B_1, and G_1, the eye would see only one color since the dots are so small normal vision combines them into one.

For the entire dot screen to be of the same color and with the same fidelity as a monochrome picture, each trio of dots must be scanned at least once. Since the color transmission is compatible with the monochrome transmission, the same type of scan is used. The horizontal rate is 15734 cps and the vertical rate 59.94 cps.

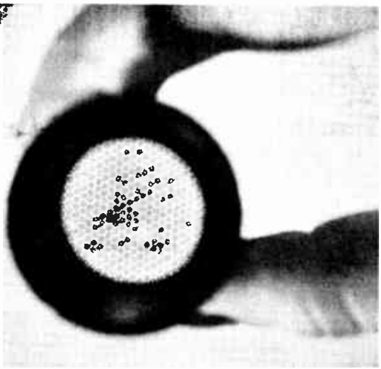

Dot trio on the phosphor screen as seen through a magnifying lens.
Courtesy RCA Victor

Now the three beams can't just scan one trio as R_1, B_1, and G_1, and then G_1, R_2 and B_2. If they did, the intensity of the three beams varying from one picture element to another at the transmitter, would produce colors not in the original scene since a dot like G_1 would be scanned twice.

SHADOW MASK

A shadow mask prevents this error, by limiting the scan in such a way that only one trio of dots is scanned at once. The trio scanned is indicated in Figure 9A by the dotted lines. The mask is so named because between trios, the beam hits the mask instead of the screen.

CONVERGENCE

Figure 9B shows the relative position of the three electron guns, the shadow mask, and phosphor screen.

The three beams pass through a common hole in the shadow mask. Since the centers of the dot trio form an equilateral triangle, the centers of the three guns also form an equilateral triangle as shown in the inset of Figure 9B. However, if the green gun is at the bottom of the triangle, the beam will strike the green dot at the screen at the top of the dot trio. The red gun at the top left of the triangle will strike the red dot at the bottom right of the triangle at the screen. The blue gun at the upper right will strike the blue dot at the lower left of the triangle at the screen.

Figure 9B shows the position of three electron guns at the three corners of the equilateral triangle drawn as a solid line. The respective phosphor dots excited at the screen are shown with their centers connected by solid lines.

When the three beams meet at a common point, they are said to be in **convergence.** The hole in the shadow mask is the proper point of convergence. If the three beams meet between the shadow mask and the electron guns, the shadow mask may cut off the beam to the screen. If the beams meet between the shadow mask and screen, the cross section of the beam at the screen forms a smaller triangle than the phosphor trio.

Consequently, assuming they are the same circular area as the dots, the three beams will overlap and this results in an impure hue. In either case, whenever the beams do not coincide with the phosphor dots there is improper convergence. A high d-c voltage is applied to a convergence electrode in small screen picture tubes.

DYNAMIC CONVERGENCE

Now, if the entire screen is to be horizontally scanned each time, the convergence must occur at each shadow mask hole. Suppose the beams were adjusted with a d-c voltage so they converged properly at the center trio of dots as shown at Point A in Figure 10. When the beams are deflected from this position as shown in Point B, the convergence occurs between the electron guns, and the shadow mask. Some sort of correcting device must adjust the beams to their proper shadow mask hole. A small portion of the horizontal sweep voltage applied to the d-c convergence electrode does the trick. This is called **horizontal dynamic convergence.**

The vertical convergence problem is easily solved by this same technique. If Figure 10 represents the vertical sweep with the d-c convergence set at the centermost dot trio, then any vertical displacement causes the vertical convergence point to fall between the electron guns and the screen. Hence, a vertical sweep voltage is added to the d-c convergence voltage to maintain the **vertical dynamic convergence** at the shadow mask hole.

Adding an a-c voltage to a d-c convergence voltage in this manner is called **dynamic convergence.** The term applies to either the vertical or horizontal convergence.

Even when the convergence is corrected as the beam is deflected as shown at Point C in Figure 10 the beams cover a larger area than they do at Point A. Therefore, to correct this fault the screen is made with larger holes in the center than at the edges as shown by Figure 11B. The one row of vertical holes and one row of horizontal holes demonstrates the manner in which the holes get progressively smaller toward the edge. This keeps the area covered by each beam constant so that it hits only the correct color dot.

FOCUS

In the d-c situation, where the beam is not being deflected, again a center dot trio is chosen to focus the three beams. In this type of picture tube, the focus is electrostatically controlled by an electrode in the picture tube.

With the electron beam in focus, the smallest possible dot is produced on the screen. In Figure 11A, the three beams are shown in proper convergence and also properly focused at the center of the screen. A wide beam is emitted from the electron guns and narrowed down to three points on the proper dot trio. Beyond the screen, the image would appear out of focus as shown by the extended beams.

When the beam is deflected horizontally, the focal point is no longer at the screen, but between the shadow mask and the screen. The focal point remains the same distance from the gun but swings out from the screen on the arc of a curve. The convergence may still be proper but the dot covers a bigger area of the screen. Again the beams might overlap and produce color impurity.

When the screen is rounded, some compensation is achieved. However, to completely correct this fault, some horizontal sweep output voltage is added to the d-c focus voltage. This is called **dynamic focus.**

In the same manner, when the beam is deflected vertically, the focal point is no longer at the screen. Again the screen may be curved to compensate for some of the focus. However, a vertical sweep output voltage must be added for a good vertical focus.

Hence, for a complete **dynamic focus** portions of both vertical and horizontal sweep output voltages must be added to the d-c voltages.

In electromagnetic convergence, the three beams are positioned by a d-c current for d-c convergence.

A horseshoe electromagnet, having one winding as shown or having two windings connected in series, is placed over the pole pieces in the electron gun. Figure 12A shows the position. The internal tube pole pieces complete the magnetic circuit of each electromagnet.

When a d-c current is applied such that the internal pole pieces form north and south poles, the beam coming out of the paper is deflected downward. If the d-c current is reversed, the beam will be deflected upward. Each magnet controls its own beam. There is practically no interaction between the three coils since the metal pole pieces inside the tube confine the magnetic field to the proper gun. When a sweep is applied, both horizontal and vertical sweep current wave-forms are impressed on the d-c current through each of the convergence coils.

A later type of convergence assembly for 21″ tubes uses a permanent magnet for the d-c convergence adjustment. As shown in Figure 13A, the assembly is similar to Figure 12A and is used with the same blue beam convergence assembly of Figure 12B. Two coils are wound in series about the split horseshoe pole pieces. A square notch separates the two pole pieces where the PM fits through them. Both pole pieces are held together by a non-magnetic clamp. Three such assemblies are mounted in the same position on the pix tube neck in the same manner shown in Figure 12A.

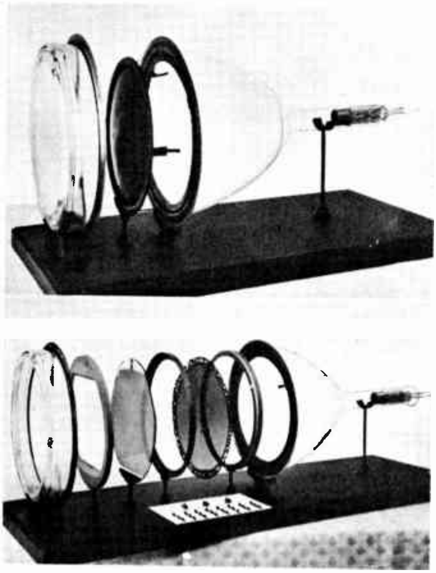

Two types of color TV tubes showing physical structure. Upper tube has a dot screen directly on the curved faceplate. Its shadow mask is curved also. Lower tube has dot screen on a separate flat glass plate. Its shadow mask is also flat.

Courtesy CBS, Inc.

The magnetic field for dynamic convergence is formed in the same ways as that of Figure 12A. However, the d-c convergence is easily made independent of voltage variations by using a permanent magnet. The magnet is a ferromagnetic rod. As shown in Figure 13B, the poles are along the diameter of the rod and the magnetic field is through the diameter. The bottom half is shaded to indicate the N pole. Looking at Figure 13A, then, the rod is turned to adjust for maximum or minimum field through the pole pieces certainly a very ingenious arrangement.

BEAM CONVERGENCE MAGNETS

Mounting three electron guns 120° apart the same distance from the center axis of the picture tube requires extreme precision. Even more difficult is to align shadow mask and phosphor screen with these guns. Therefore, a correcting permanent magnet similar to the beam benders used in monochrome receivers, must be used to correct these errors.

In the electromagnetic convergence tubes, a positioning magnet is used only for the blue beam. Figure 12B shows the end view of the internal pole pieces around the blue gun. The pole pieces are made of a high permeability material. The dotted lines show the direction of the magnet field which can be formed by a permanent magnet or a d-c current in an electromagnet. The mounting bracket for the magnet is also a high permeability material. The internal pole piece prevents interaction with other beams.

Suppose the magnet has its north pole at the bottom as in Figure 12B. The lines of force are concentrated through A and spread by pole piece B. The magnetic lines pass through the glass to the bracket completing the magnetic path, to the south pole. With the blue beam coming out of the paper, the beam would be deflected to the left. When the polarity is reversed, the beam would be deflected to the right. Screwing the magnet closer to the beam gives a greater deflection.

Thus, in an EM tube, the beams from the green and red guns can move only parallel to the walls of the inner poles. The beam from the blue gun in addition can be moved sideways by the assembly of Figure 13B. The convergence coils must be positioned physically so the horseshoe magnets are directly over the inner pole pieces. Likewise the blue beam convergence magnet must be correctly positioned. Looking at Figure 8 shows exactly where the blue **beam convergence magnet** fits, directly over grid 3 while the convergence coils and assembly fit over the main pole pieces in front of grid 4.

PURITY COIL

The **purity coil** is an air cored coil of two windings connected in parallel as shown in the schematic diagram of Figure 14A. The two windings produce a magnetic field through which all three beams pass. Figure 17 shows the relative position of the purity coil, beam correcting magnets, and deflection yoke. Note that the purity coil is near the focus electrode in the picture tube.

The purity coils produce a magnetic field across the neck of the tube. Suppose the current through coils is in such direction to produce a north pole to the left and a south pole to the right as in Figure 14. An electron beam from the blue gun is shown coming toward the screen.

The effect at the phosphor screen is that the beam is deflected down. With the polarity of the coils the same the other two beams also will be deflected down.

The purity coils may be rotated in any direction about the axis of the tube. The purity coils also may be moved along the axis of the tube. Since the amount and direction of current can be controlled, the axes of the three electron beams may be positioned as desired with respect to the axis of the picture tube. When these axes are the same, the most pure, fully saturated colors are produced.

Instead of an EM for purity adjustment, a number of receivers are currently using two PM rings shown in Figure 14B. Usually, a tab end is one of the magnetic poles and directly at the other end of its diameter is the other pole. In the center of each ring is an arrow representing the main direction of the magnetic field. Actually, these two rings are placed next to each other. For the initial starting point for purity adjustment, they are placed so that the magnetic fields cancel, that is, the north pole of one is placed next to the south pole of the other.

Now to move the beams in the desired direction, the tabs are rotated. As shown in Figure 14B, although the two magnetic fields are in different directions, the combined result is in the direction indicated by the third arrow. Since these purity rings are free from voltage variations, they provide a better adjustment than the EM coils.

RIM COIL

Located around the picture tube and centered between the dot screen on the face and the shadow mask is a circular coil of wire shown in Figure 15A. A d-c current is passed through the **rim coil** to minimize effects of stray magnetic fields affecting the beam mainly due to fields passing through the metal shadow mask. Figure 15B shows that the rim coil is wound along the edge of the tube and its magnetic field is into or out of the paper.

CALLED A MAGNETIC-FIELD EQUALIZER ASSEMBLY or RIM PURITY MAGNETS, eight permanent magnets sometimes are located externally to the picture tube and in the same position as the rim coil, and are used instead of the rim coil. Figure 15C shows how eight PM's are placed evenly around a metal strap. Each is held by a small mounting bracket and thumb screw. The thumb screw can bring the magnets in and out and also an inner locking nut holds it in a fixed direction.

Aligning the shadow mask with the phosphor screen requires precision.
Courtesy General Electric Co.

Thus, each magnet can be adjusted individually to correct for local color impurity or "fingering" whereas the rim coil must make an overall adjustment. The magnet is placed so that its field can be turned to cancel the stray field as the beam strikes the dot screen. Since the magnet can be turned in either direction and moved closer or further, the beam can be deflected in any direction to compensate for stray magnetic interference.

ELECTROSTATIC CONVERGENCE TUBE

To date, the only shadow mask picture tubes having electrostatic convergence have small viewing screens. With the advent of the larger picture tubes, all of which are electromagnetic, the 15″ electrostatic (ES) tube has for the time being become obsolete.

Generally, the outer physical appearance of an ES and EM convergence picture tube is similar. Of course, the EM is much larger in diameter at the screen, but the overall length of each is still about 21″.

An outline of the ES convergence picture tube with some of its external components is shown in Figure 17. Externally located are three individual gun magnets, a purity coil, and deflection yoke. The external aquadag coating extends almost to the flare of the picture tube neck. Partially covering this coating is the external insulating coating. The ultor anode is formed in the same manner as on the large screen color TV picture tubes.

On the inside of the tube are three separate electron guns, with a convergence electrode common to all three, thus giving the tube its electrostatic convergence. The shadow mask has sets of uniform holes in it like in the larger tubes, but unlike the larger, it is a flat plate and not curved. The dot screen is not printed directly on the glass face plate, but on a separate phosphor dot plate which is also flat. Thus, in the small screen tube there is an additional mechanical set-up problem to align the mask with this separate dot screen.

Base Connections

Since the internal gun structure has an ES convergence electrode, you can expect the base connections shown in Figure 18 to be slightly different from the large screen type. There are 20 external pins, not counting the **ultor connection.** The heaters are internally connected in parallel, while each gun has its own cathode, control grid, and screen grid. Common to all three guns are the electrostatic convergence electrode pin 13 or G_4 and the focus electrode pin 6 or G_3.

Electron Gun Assembly

The view of Figure 19 shows the electron gun assembly. The electrode voltages given in the drawing use ground as a reference. Note that the getter assembly is in the form of a straight tube, near grid 3. The screen grid is at some fixed B+ as in monochrome receivers and performs as an accelerating electrode. In both the large and small screen tubes however, these electrodes are connected to a potentiometer in the B+ circuit, thus allowing for an equal balance among the three electron beams.

Between the two electrodes labelled grid No. 4 is formed the electrostatic field which converges the three electron beams at the proper holes in the shadow mask.

It works in the same way explained for electrostatic focusing, except that what happened to the electrons in one beam now happens to the three beams.

Furthermore, these electron guns are parallel to each other and are not tilted toward the axis of the tube as in the larger EM convergence tubes. As a result, along with the flat mask and phosphor dot plate, convergence adjustments are a little more difficult in the ES tube.

BEAM POSITIONING MAGNETS

To position each beam individually is done with three separate adjustable permanent magnets. Mounting three electron guns 120°

apart as in Figure 20A requires extreme precision. Wtih the additional problem of aligning the shadow mask with the separate dot screen, the problem of pix tube set-up is magnified. Therefore, three PMS similar to beam benders used in monochrome receivers must be used with this type of tube. They may be used with the large screen types in addition to the components already mentioned, but for the most part are not absolutely necessary, and hence were not described earlier.

In Figure 20A, the beam positioning magnets are mounted directly over each gun. In Figure 20B is shown an actual set of beam positioning magnets. These are exactly 120° apart and have screw driver slots for ease in adjustment. Preferably, nonmetal screw drivers should be used to bring them in and out from the guns.

DEFLECTION YOKE AND CENTERING CONTROLS

The deflection yoke is composed of two sets of coils, one set for the horizontal and the other for vertical deflection. As shown in Figure 21, they are located in the same position as for a monochrome picture tube. They also perform the same function.

Shown are the various component locations on the 15″ picture tube. Note that the various components are in the same relative positions as on the larger screen picture tubes shown in Figure 16A and 16B.

Vertical output sweep feeds the vertical deflection coils through the vertical output transformer. As shown in Figure 22, the vertical deflection coil is in series with the vertical centering control. Current through the coils may be in either direction by adjusting the vertical centering control which comes off the B+ supply.

The horizontal deflection coils are connected in parallel with part of the horizontal output and high voltage transformer as shown in Figure 23.

In series with the horizontal deflection coils is part of the horizontal centering control. The B+ for the centering control comes from the damper circuit. Capacitor C_3 is for neutralization. Without it, the horizontal scan lines on the left side of the raster are displaced vertically and proper beam convergence is not obtained. Color impurity is the result. This circuit is typical of those found in all color receivers.

DAMPING CIRCUIT

In picture tubes using electromagnetic deflection a damping tube is used to suppress any oscillations between 75 and 100 kilocycles occurring during the flyback time of the retrace. In some monochrome receivers the damping circuit not only suppresses these oscillations but also supplies a boosted B+ voltage. A common type of damper circuit with a boost voltage is shown in Figure 23.

The damper circuit essentially consists of part of R_2, C_3, part of T_2, V_1, both primary and secondary of T_1, and the horizontal centering control. When one line of the picture is being scanned, tube V_1 conducts. Capacitors C_2, C_3, C_4, and C_6 charge up during this period. Capacitors C_1 and C_5 block the d-c and only the horizontal output sweep voltage reaches the deflection yoke L_1. Since V_1 serves as a short circuit during conduction, the winding of T_2 below the cathode of V_1 is short circuited except for current limiting resistor R_3. This action damps out any oscillation. During retrace time when its plate is negative with respect to its cathode, V_1 does not conduct.

C_4, C_2, and C_6 cannot discharge during the retrace time because V_1 is effectively an open circuit. Since the three capacitors charge up and cannot discharge, each end of the horizontal centering control is at a fixed d-c voltage. The tap A is also at a fixed d-c voltage. The potentiometer arm can now choose a voltage more or less positive than the tap voltage. Now since each end of the horizontal deflection coil is at a fixed d-c voltage, the arm of the potentiometer can be adjusted on each side of the tap so that the raster is shifted to the right or left.

FOCUS CIRCUIT

A separate focus voltage is required for the three electron beams. The d-c voltage needed is approximately 3 KV. A focus circuit using the horizontal output sweep from the flyback transformer is shown in Figure 24.

When the horizontal output pulses go positive, the focus rectifier conducts. Since there is no plate load, all the voltages will be across the load, and the voltage across the tube is negligible. Hence, capacitor C_1 takes the full charge. C_2 provides additional filtering. C_1, C_2 and the two resistors R_1 and R_2 form a long time constant network, and therefore, the capacitors do not discharge appreciably between pulses.

This filtered d-c voltage is adjusted by means of R_1, but once the beams are in focus usually no other adjustment is necessary. The d-c voltage is applied to the focus electrode at the picture tube through the vertical convergence transformer. This focuses the beam only at the center of the picture tube as explained earlier in the lesson. To provide focus over the entire picture tube dot screen in the large electromagnetic convergence tube, the d-c focus voltage is fed to the horizontal and vertical dynamic convergence and focus transformers. This type of focusing may be referred to as "dynamic focus".

Figure 25 shows an alternative high voltage and focus circuit. Here, the high voltage and focus rectifier tubes are at the ends of the horizontal output primary winding. They act as a half wave rectifier circuit. The booster voltage developed from plus side of C_1 to ground is higher than the B+ voltage.

The horizontal output pulses ride the d-c level established by C_1. As the voltage rises to the highest instantaneous value V_2 and V_3 conduct. Capacitor C_5 charges to the full high voltage. Resistors R_8, R_9, and R_{10} form one bleeder, and in the focus rectifier circuit R_5, R_6, R_7 form a bleeder in parallel with C_6.

If either of the voltages fall below the peak, on the next hori-

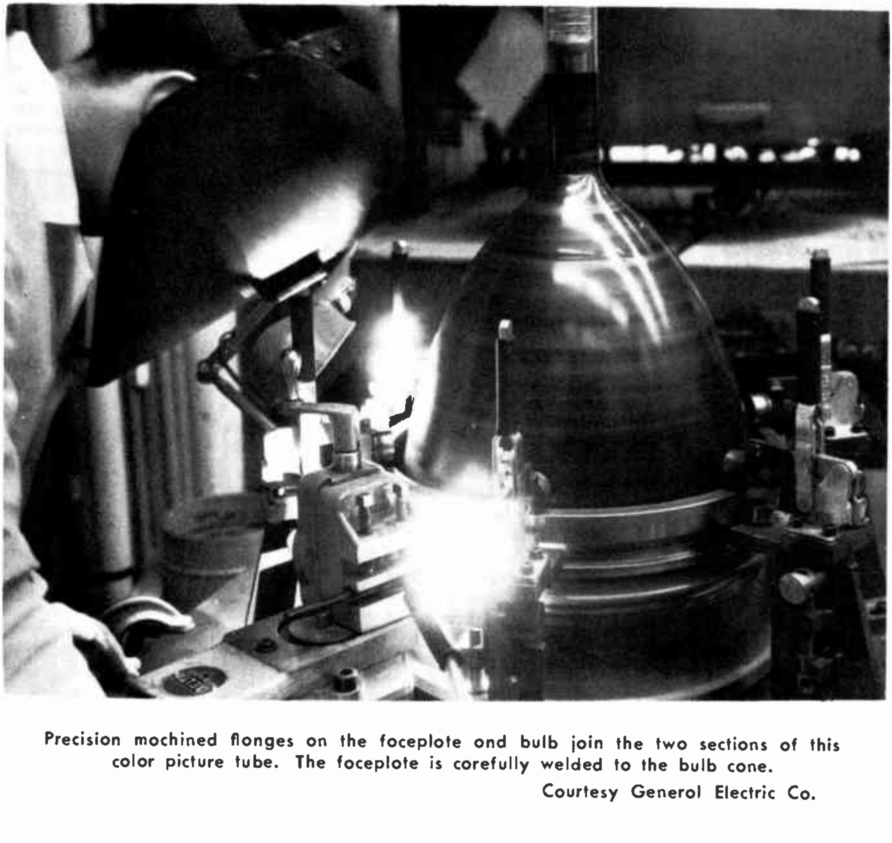

Precision machined flanges on the faceplate and bulb join the two sections of this color picture tube. The faceplate is carefully welded to the bulb cone.

Courtesy General Electric Co.

zontal sweep pulse they are recharged to the pulse peak voltage. The high voltage is regulated by the corona regulator tube VR_1.

When the anode has reached the operating voltage, the regulator conducts. It draws just enough current to keep the voltage from rising above this operating value.

HIGH VOLTAGE SUPPLY

High voltage is developed from the horizontal sweep output at the flyback transformer. The step-up turns ratio gives a large pulse. Either a voltage doubler circuit or some other circuit previously used in monochrome receivers is used to rectify and filter the voltage. However, some regulation of the high voltage is desirable.

A voltage doubler and a shunt regulated high voltage supply is shown in Figure 26. Tube V_1 is the high voltage rectifier, tube V_2 is the diode coupler, and tube V_3 acts as the high voltage doubler. Capacitors C_1 and C_2 are of equal capacitance while capacitor C_3 has more than triple the C_1 capacitance.

With the high positive pulses shown V_1 conducts through C_1. V_3 conducts on the same high positive pulse as V_1 through C_3, C_2 and the bleeder consisting of R_1, R_2, R_3, R_4 and R_5. Since capacitor C_2 is less than one-third the capacitance of C_3, it charges up to higher voltage than C_3. The voltage across C_2 is less than the voltage across C_1. This makes the cathode of V_2 more negative than the plate. So, during the flat portion of the high voltage pulse tube V_2 conducts and C_1 discharges through the parallel combination of C_3 and the bleeder, V_3 and V_2.

Since V_1 does not conduct during this interval, C_2, V_2, and C_1 form a series combination in parallel with the horizontal output transformer and the B+ supply. C_1 and C_2 discharge through V_2, C_3, V_3 and the bleeder. C_3 charges to a higher voltage during both parts of the high voltage pulse cycle until approximately 20 KV is reached.

A constant load is kept on the doubling circuit by the bleeder. The bias on the shunt regulator is the difference between fixed cathode bias supplied by the B+ supply and the positive voltage at the grid supplied through R_3 and R_2 by the driving pulse.

To adjust the regulator when the output voltage is much lower than 20 KV the tap on R_2 has to be moved away from R_3. The tube is drawing too much of the current, therefore the bias on the shunt regulator is low. If the bias is increased by moving the arm away from R_3, the tube will draw less current. Now the parallel combination formed by the B+ supply and V_4 with the bleeder, is a higher equivalent resistance and the output voltage at the cathode of V_3 or plate of V_4 will rise. On the other hand, when the output voltage is high the bias should be decreased to get 20 KV by moving the R_2 arm toward R_3.

The 20 KV of the bleeder is used at the ultor terminal of the picture tube. Voltage across R_3 is applied to the convergence electrode at the picture tube. This d-c voltage is approximately 10 KV, which is sufficient to attain d-c convergence of the three beams at the center of the shadow mask.

EM CONVERGENCE ASSEMBLY

Figure 27A is a complete circuit for horizontal and vertical dynamic convergence for the 19VP22 electromagnetic convergence tube.

Since each beam is controlled by its own convergence coil, the three amplifiers are independent. V_1 and V_2 also provide output wave-forms to V_3 and V_4 and these tubes function in the same manner as V_3. Therefore, only the top circuits consisting of V_1, V_2, and V_3 will be described.

Winding T_1 on the flyback transformer supplies either a positive or negative going pulse to V_3 the green convergence amplifier. A positive pulse from T_1 is applied to amplifier V_1. R_1 and C_1 form a grid leak bias circuit. The time constant of R_1 and C_1 is such that tube V_1 is normally cutoff. During this time C_2 charges through R_2 to the B+ supply voltage. During the positive flyback pulse time the tube draws grid current and C_2 discharges rapidly through tube V_1. V_2 is a cathode follower amplifier and the amplitude of the sawtooth is adjusted by potentiometer R_5.

Sawtooth pulses are fed to the grid circuit of V_3. The output current pulses of V_3 are parabolas at the horizontal line frequency. C_8 and R_8 form a feedback circuit. Potentiometer R_{13} adjusts the d-c current through the 1200 turns of T_2. The varying a-c current is added to the d-c current at point A.

The vertical output plate current has a sawtooth waveform. Cacapacitor C_{13} and resistor R_{16} in parallel form the sawtooth into a parabola. Resistor R_{14} adjusts the amplitude of the parabola. Coil L_1 is an isolation choke.

At point A both horizontal and vertical current wave-forms are added to the d-c. Controls R_{15} and R_{17} adjust the amplitude of the peaks of the ends of both vertical and horizontal parabolas, respectively. If one peak is higher than the other for horizontal dynamic convergence, the potentiometer R_{17} is adjusted. This equalizes the amplitudes. For that reason the controls are called "tilt" adjustments. Both controls can provide positive or negative going pulses for "tilt" adjustment. However, the vertical tilt is transformer coupled from the 800 turns on T_2 to 1200 turns.

The 1200 turns on the green convergence coil varies the magnetic field around the green beam to bring it into convergence at the shadow mask with the other two, as this provides the d-c convergence.

In Figure 27B and 27C are EM convergence circuits found in sets having 21″ picture tubes. Note that neither of these circuits use tubes. Therefore the number of tubes used in the color receiver has been reduced.

In Figure 27B, T_4 is a winding on the horizontal output transformer. It provides the rectangular pulse as one input, while the vertical output amplifier provides a 60 cycle trapezoidal wave. Horizontal dynamic amplitude controls R_7, R_8, and R_9 are in parallel with the T_4 winding. Each control selects the retrace pulse amplitude independently of the other. C_9 and L_1 form a series resonant circuit at the 15,734 line frequency as do $C_{10}L_2$ and $C_{11}L_3$. The exact setting of these horizontal phase controls, shifts the phase of this sine wave a sufficient amount.

A 60 cycle trapezoidal wave from the vertical output plate can be either positive or negative with respect to the center tap on R_1, R_2, or R_3. On one side of the tap, a negative sawtooth is applied directly to one side of inductor L_5. Capacitors C_1, C_2, C_3 merely prevent d-c through this side of the inductors. The inductor field is directed into the picture tube properly by the horseshoe magnet which also passes through the other part of the inductor. Choke L_4 keeps the 60 cycle out of the horizontal convergence coils L_1, L_2 and L_3. C_8 with L_4 creates a vertical tilt parabola due to their charge and discharge time.

Since the L_4C_8 combination is in series with each horizontal phasing coil which are all in parallel, a vertical parabola is fed to each of the horizontal convergence coils. Controlling the amplitude of the parabola are the vertical dynamic amplitude controls R_4, R_5 and R_6. C_7 is a large capacitor acting as a direct wire connection for 60 cycles. Thus, between the vertical output plate and B+ a vertical parabola is applied to the horizontal convergence coils. For 60 cycle, the horizontal phasing coils likewise act as a direct wire connection.

Both horizontal and vertical wave-forms are combined in the magnetic field existing in the horseshoe magnets. Inserted on top of this are sharp peaks from the vertical trapezoid from the vertical output plate through the other winding on the convergence coil assembly. These peaks can be just as shown for that waveform below the dotted line, or they can be 180° out of phase with this same wave-form. Thus, the peaks can be equalized by the selection of a positive or negative going sawtooth.

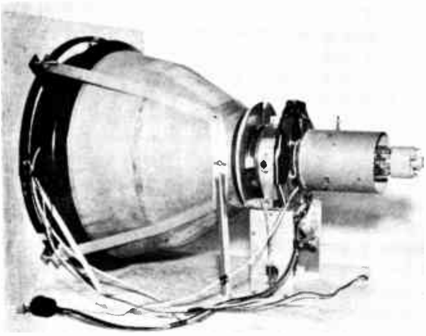

Tri-color picture tube shows location of associated components.

Courtesy Sentinel Radio Corp.

Figure 27C is very similar to Figure 27B. The vertical tilt and vertical amplitude controls perform the same functions as before. L_7 and C_{10} form a horizontal parabola from the horizontal pulse on the transformer. Again R_{10}, R_{11}, R_{12} all in parallel, select the necessary amplitudes of this horizontal parabola for each of the convergence coils. Note all the voltages here are a-c.

Capacitor C_6, L_6, C_9, and L_3 form a series-parallel resonant circuit. Thus, the vertical tilt applied to this resonant circuit through L_3 which is effectively in parallel with L_6 modifies the magnet field in the horseshoe by the desired amount. C_7, C_8 and C_9 are adjusted as for Figure 27B. Resistors R_8 and R_9 limit the amplitude of the horizontal parabola sufficiently for the red and green guns.

ELECTROSTATIC CONVERGENCE AMPLIFIERS

In the 15″ electrostatic tube, the horizontal and vertical amplifiers provide pulses for the dynamic convergence and focus to the respective electrodes at the picture tube. Figure 28A shows an amplifier which receives these pulses, corrects the phase of the pulses, and applies the combined pulses to the convergence and focus electrodes. The same waveforms are developed as for the EM convergence.

A vertical output pulse at 60 cps is taken from the cathode potentiometer and coupled to the grid of V_1. Resistors R_1, R_2, R_3 and capacitor C_2 shift the phase and shape these vertical pulses so that the focus and convergence are proper from top to bottom of the entire screen. C_2 also serves as a d-c blocking capacitor. C_1 and R_3 provide grid-leak bias and R_4 and C_3 provide cathode bias.

Transformer T_2 provides the proper dynamic vertical convergence and focus. An iron core resonates it to 60 cps. The secondary of the vertical transformer is tapped to provide the proper ratio of dynamic focus voltage to dynamic convergence voltage. The dynamic convergence voltages are capacitively coupled to the converging electrode and added to the d-c convergence voltage.

The horizontal output from the cathode potentiometer is applied across L_1, which serves as the horizontal convergence phase control.

The horizontal dynamic focus and horizontal dynamic convergence transformer T_1 is resonant to the horizontal line frequency. The primary of T_1 is connected in series with the primary of T_2. The horizontal dynamic focus wave-form is applied in parallel to vertical wave-form through C_5. The tap on the secondary of T_1 provides the proper ratio of dynamic focus voltage to dynamic convergence voltage.

The dynamic vertical and horizontal voltages across the secondaries of T_1 and T_2 are in parallel and C_4 acts as the coupling capacitor.

With correct horizontal and vertical dynamic voltages applied to both the focus and convergence electrodes, the beams remain converged at the shadow mask and focused on the screen throughout the entire raster.

Another type of horizontal and vertical convergence circuits for the small electrostatic convergence tubes is shown in Figure 28B. A pulse from the plate of the vertical output stage is coupled directly to R_1. R_1 and R_2 are voltage dividers. C_1, R_3, C_2 and R_4 function as a wave shaping network. R_4 adjusts for the correct vertical phase. The pulse is fed to the primary of the transformer T_1.

The horizontal output pulse is taken off the cathode potentiometer and is coupled through capacitor C_5. C_5 and L_1 form a phase shifting circuit. Resistor R_6 provides the cathode bias for tube V_2.

The phase shifted pulse is amplified and fed to the primary of T_1. The transformer adds the horizontal convergence pulse to the vertical convergence pulse, and capacitor C_6 removes the d-c from the plate of V_1 from the combined pulse. Then, the combined convergence pulse is applied to the d-c convergence voltage selected at R_8.

LOW VOLTAGE SUPPLIES

The power required for a color television receiver is about double the power in a monochrome receiver. The large power is needed because there are approximately one and one-half times the number of tubes in a monochrome receiver. Otherwise the power supply is the same as that used in a monochrome receiver. Figure 29 shows a typical low voltage power supply.

The vertical centering circuit is part of the B+ filter supply. The purity coil circuit is taken off the half-wave rectifier circuit consisting of SR_1 and C_3, L_1, R_1. Resistor R_2 controls the current through the purity coils. In this case, the minimum current required that gets the desired result is the best setting of R_2. Choke L_1 helps to filter the negative half waves. At the junction of L_1 and R_2 a negative voltage (with respect to ground) of approximately 5 volts is applied to the Q and I demodulator suppressor grids. The voltages applied to the various stages are taken from the terminal marked B+.

TYPICAL TV RECEIVERS

Figure 30 shows a complete RCA receiver schematic and Figure 31 is a Motorola. The circuits described in this lesson and some from the previous lessons can be found in one of these two receivers.

The block diagram of a color television receiver described in an earlier lesson fits both of the receiver schematics. First, the RCA is a wide band chrominance receiver, while the Motorola is a narrow band chrominance receiver. This RCA has 36 tubes, while the Motorola has 30 tubes, and both tuners include UHF. Otherwise, both receivers are pretty much identical except for the same variations in those circuits already described for black and white receivers.

TROUBLESHOOTING PROCEDURES

To locate any trouble in the color TV receiver the same technique is used as that in black and white. Isolate the trouble, first in one section, a stage of the section, and finally the component of the stage.

A composite signal can be isolated in the color TV receiver by noting the sections using the monochrome and color signal and those exclusively using the color signal.

In the color TV receiver, the monochrome and color signal channel consists of the VIDEO AND SOUND CHANNEL, LUMINANCE CHANNEL, MATRIX, PICTURE TUBE AND HORIZONTAL AND VERTICAL SWEEP AND DEFLECTION. The color signal only is used by the COLOR SYNCHRONIZATION AND CHROMINANCE CHANNELS.

Before any actual troubleshooting is performed, it is wise to check the control adjustments. Misuse of the controls does cause defective receiver action. The physical location and proper use of the controls are pointed out in the manufacturer's receiver operating instructions.

With reference to the monochrome and color signal channel, the antenna must be properly installed so that the color burst at 3.58 mc is not lost due to cancellation by reflection. A sharply tuned antenna also will discriminate against color subcarrier information.

When the color receiver is functioning, the common monochrome and color sections of the receiver can be checked by tuning in a monochrome broadcast. If there is a fault, it will be in the common circuits only.

In the common circuits, a primary color shading over the entire black and white picture indicates trouble in the matrix.

Improper convergence and focus will show up in a black and white operation of the color receiver.

If the raster changes color when the master brightness control is varied, the high light and low light adjustment must be repeated.

When there is no fault in the common circuits, the trouble lurks in the color synchronization and chrominance channel.

When there is no color on a color channel, the first thing to check is the setting of the controls, especially the chroma and fine tuning controls. The bandpass amplifier and stages up to the demodulators should be checked.

When there is no color synchronization, the picture will show up with horizontal color bands moving vertically. However, when the 3.58 mc oscillator is greatly off frequency, the picture appears to be black and white.

When there is some color sync, the 3.58 mc oscillator, may be slightly off. Possibly a slight trouble in the reactance tube amplifier, apc or color phase discriminator causes this trouble. Also, any time the demodulated signals differ in phase by more or less than 90°, improper colors will appear on the screen.

In the chroma circuits, the usual a-c hum appears as color bands across the picture tube.

* * *

IMPORTANT DEFINITIONS

ADDER—An amplifier in which I, Q and Y signals of the proper amplitude and polarity are algebraically added together to produce a desired voltage of a particular color.

BEAM CONVERGENCE MAGNET—A permanent magnet, three altogether, mounted on shield assembly in front of the cathode used to position the electron beam from that gun for d-c convergence.

DOT SCREEN—For some tubes, a flat glass plate with dot trios of the three phosphors printed on it. Others print the dots on the picture tube face.

DOT TRIO—Three dots on dot screen adjacent to each other so that lines to their centers form an equilateral triangle. One dot emits green light, the second blue light and the third red light when bombarded.

DYNAMIC CONVERGENCE—Convergence of the electric beams during one or two directions of sweep.

DYNAMIC FOCUS—Focus of the three electron beams throughout the vertical or horizontal sweep.

HORIZONTAL DYNAMIC CONVERGENCE — Dynamic convergence throughout the horizontal sweep direction.

MU-SHIELD—A high permeability shield placed around the flare of the tri-color tube to reduce effects of stray magnetic fields on deflected beams.

PURITY COIL — An electromagnetic coil positioned between the electron guns and deflection yoke to orient the common beam axis with the axis of the tube.

RIM COIL — An electromagnetic coil positioned between the dot screen and shadow mask to reduce the effect of stray magnetic fields.

SHADOW OR APERTURE MASK—A metal mask parallel to and behind the phosphor dot screen in a tri-color picture tube having holes through which the phosphor dot trios are bombarded.

ULTOR TERMINAL—The high voltage terminal on a tri-color tube located at the junction of the bulb and face.

VERTICAL DYNAMIC CONVERGENCE — Dynamic convergence throughout the vertical sweep direction.

MAIN CHASSIS CIRCUIT SCHEMATIC DIAGRAM CTC2B WITH CONVERGENCE CHASSIS CTC3A

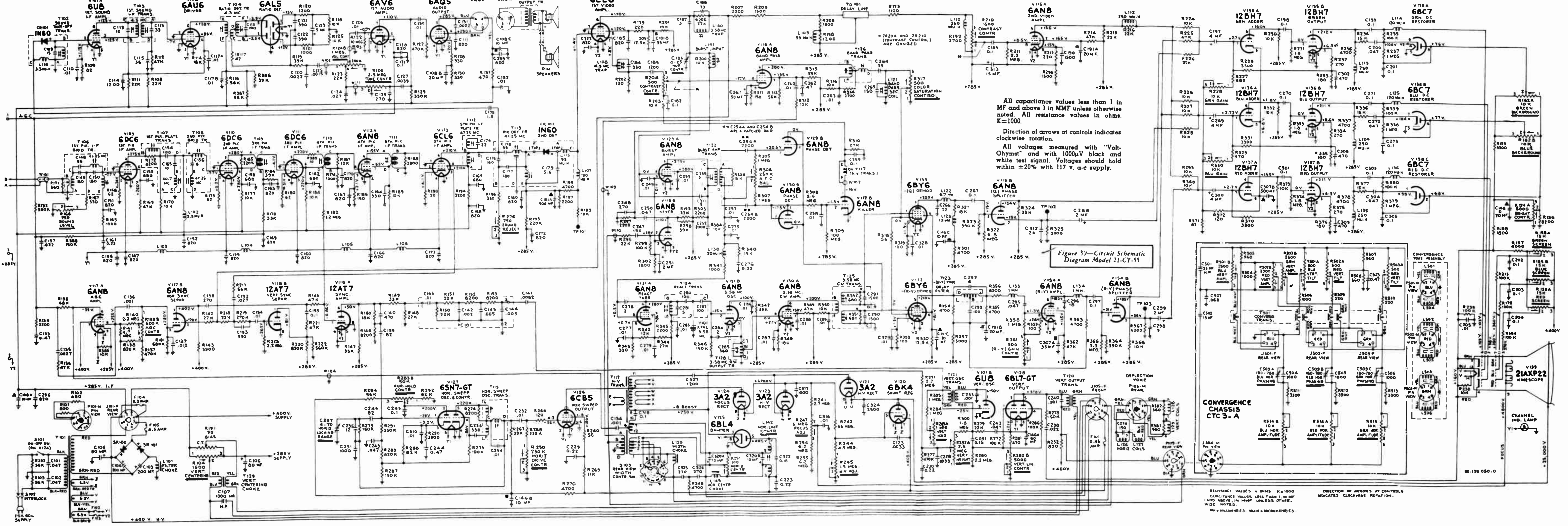

All capacitance values less than 1 in MF and above 1 in MMF unless otherwise noted. All resistance values in ohms. K=1000.

Direction of arrows at controls indicates clockwise rotation.

All voltages measured with "Volt-Ohymst" and with 1000µV black and white test signal. Voltages should hold within ±20% with 117 v. a-c supply.

RESISTANCE VALUES IN OHMS K=1000

CAPACITANCE VALUES LESS THAN 1, IN MF AND ABOVE, IN MMF UNLESS OTHERWISE NOTED.

MH=MILLIHENRIES MU-H=MICROHENRIES

DIRECTION OF ARROWS AT CONTROLS INDICATES CLOCKWISE ROTATION.

Figure 37—Circuit Schematic Diagram Model 21-CT-55

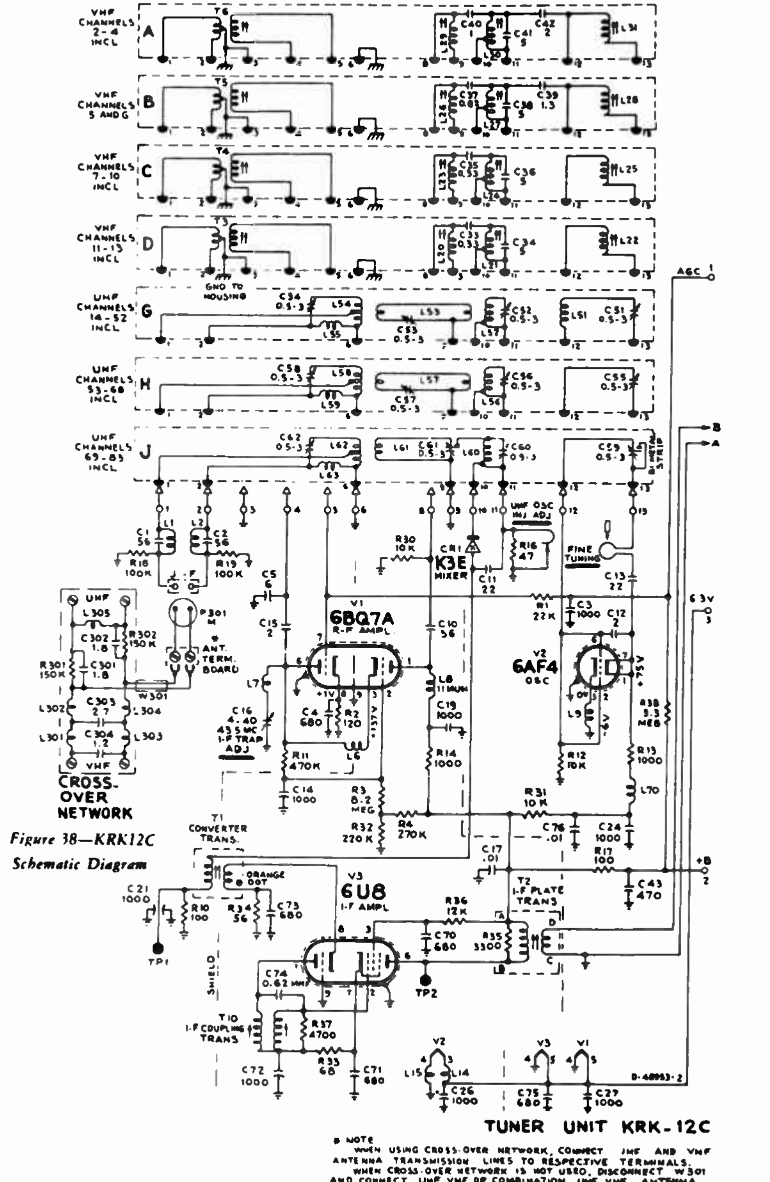

Figure 38—KRK12C Schematic Diagram

TUNER UNIT KRK-12C

* NOTE
WHEN USING CROSS-OVER NETWORK, CONNECT UHF AND VHF ANTENNA TRANSMISSION LINES TO RESPECTIVE TERMINALS.
WHEN CROSS-OVER NETWORK IS NOT USED, DISCONNECT W301 AND CONNECT UHF, VHF OR COMBINATION UHF-VHF ANTENNA TRANSMISSION LINE TO ANTENNA TERMINAL BOARD

FIGURE 30

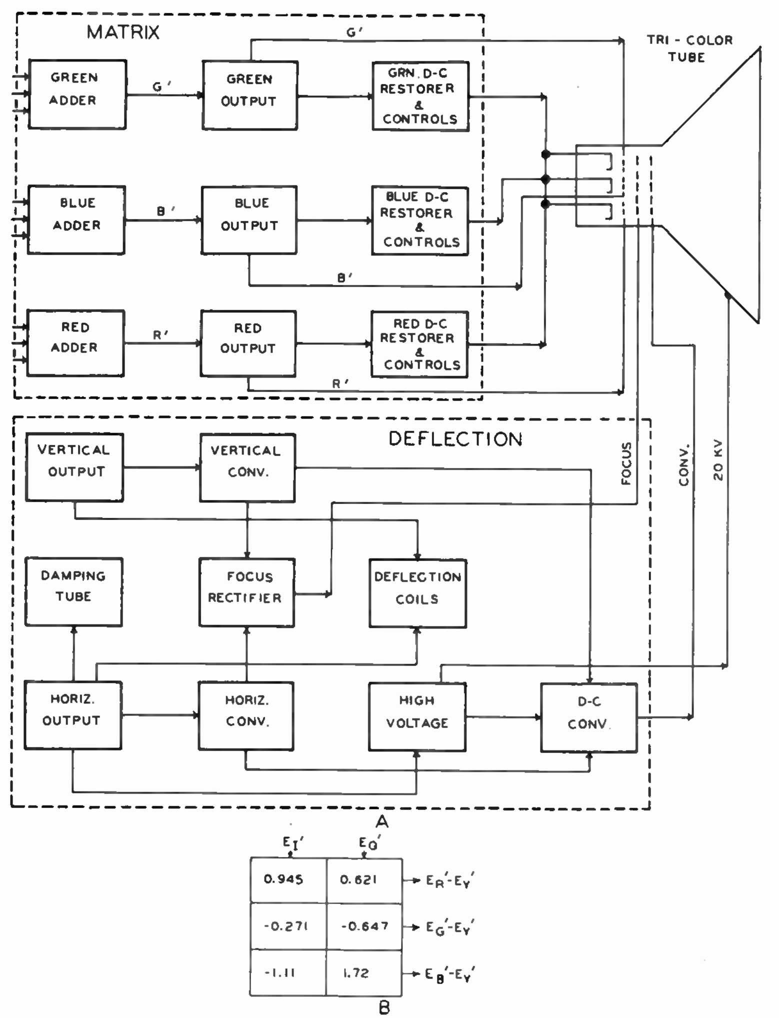

FIGURE 1

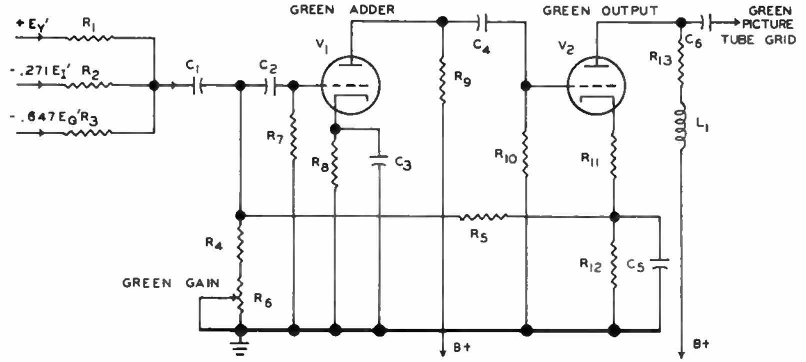

FIGURE 2

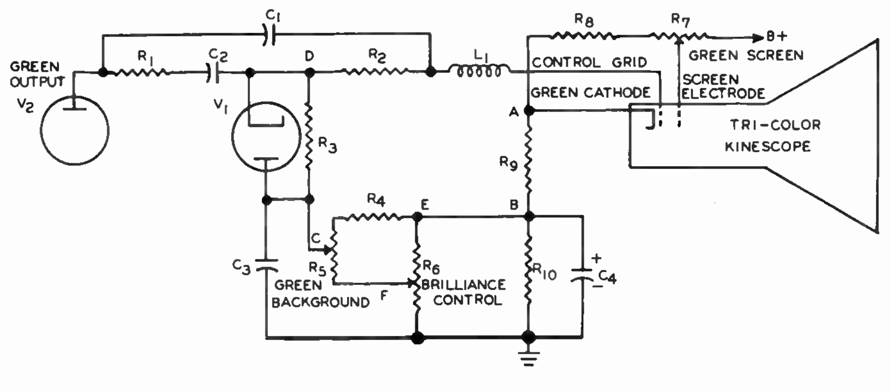

FIGURE 3

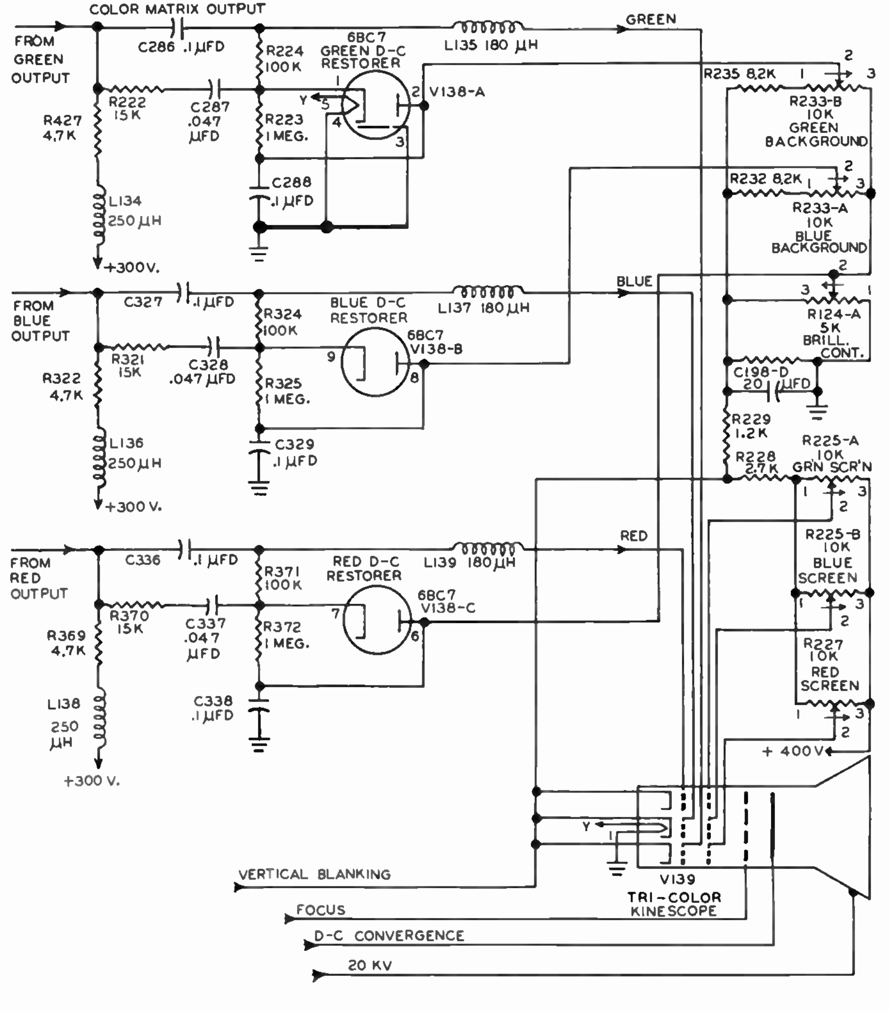

FIGURE 4

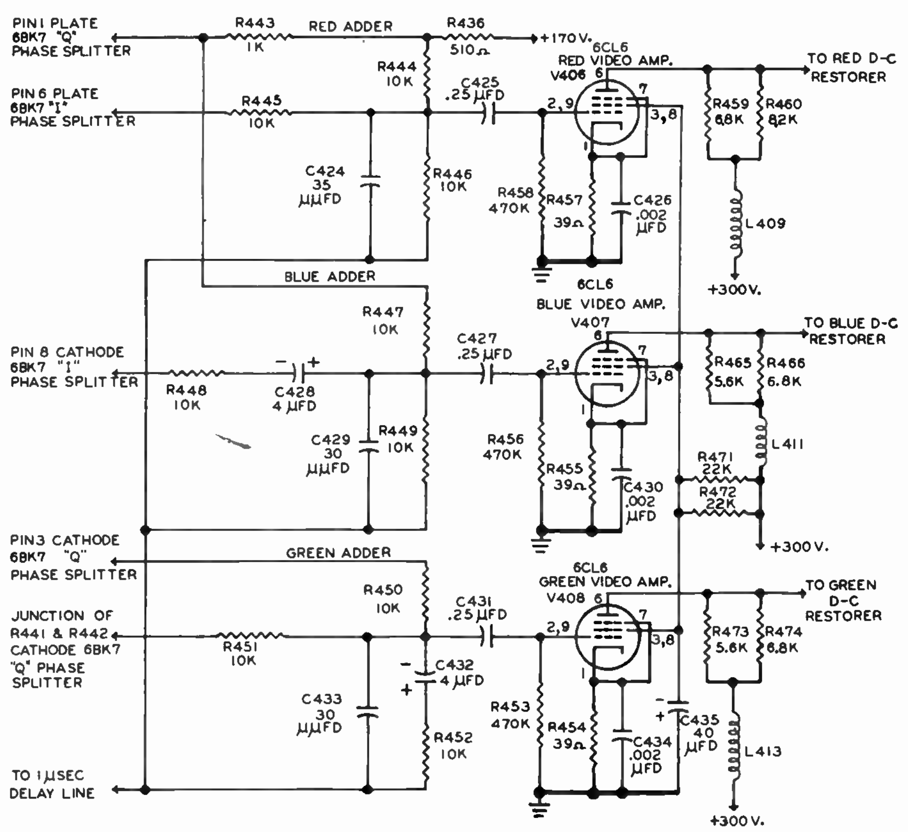

FIGURE 5

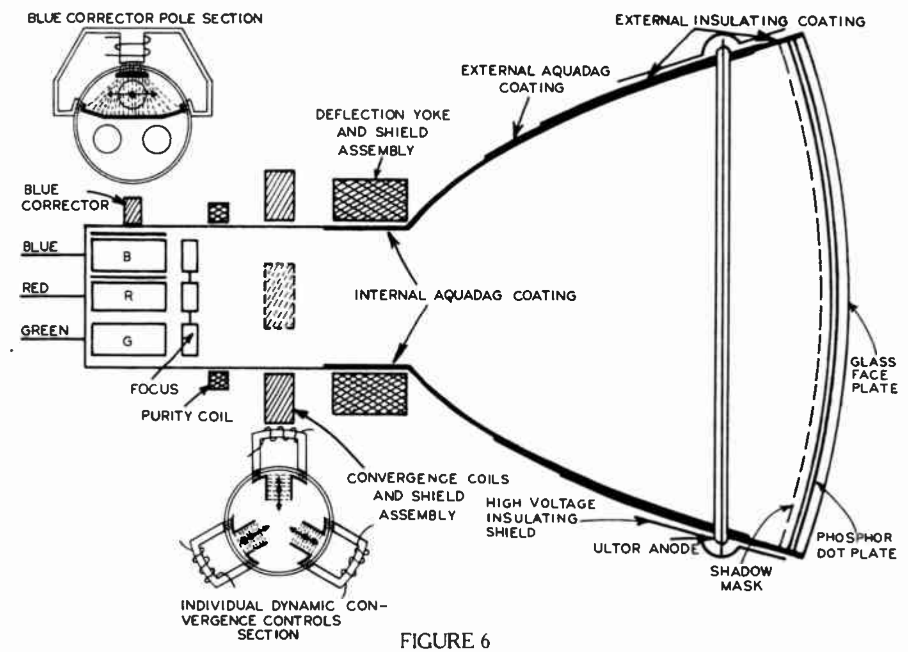

FIGURE 6

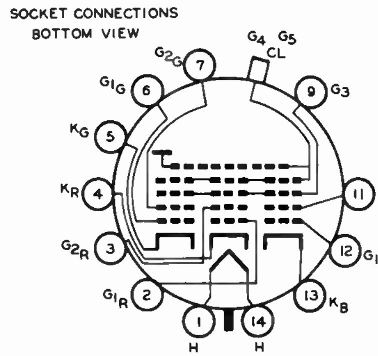

PIN 1: HEATER
PIN 2: GRID NO.1 OF RED GUN
PIN 3: GRID NO.2 OF RED GUN
PIN 4: CATHODE OF RED GUN
PIN 5: CATHODE OF GREEN GUN
PIN 6: GRID NO.1 OF GREEN GUN
PIN 7: GRID NO.2 OF GREEN GUN
PIN 9: GRIDS NO.3
PIN 11: GRID NO. 2 OF BLUE GUN
PIN 12: GRID NO.1 OF BLUE GUN
PIN 13: CATHODE OF BLUE GUN
PIN 14: HEATER
METAL FLANGE: ULTOR (GRID NO.4, GRID NO.5, COLLECTOR)

FIGURE 7

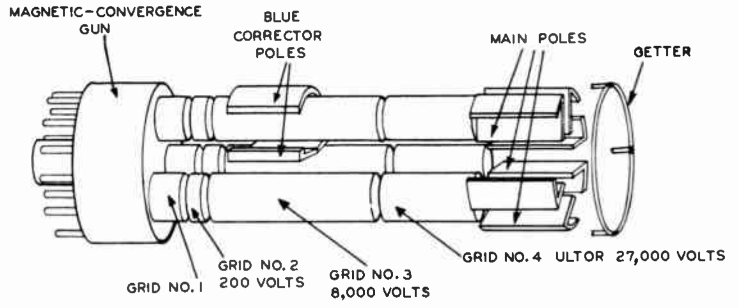

FIGURE 8

DeVRY Technical Institute

Formerly DeFOREST'S TRAINING, INC.

4141 WEST BELMONT AVENUE CHICAGO 41, ILLINOIS

QUESTIONS

Shadow Mask Tube Circuits—Lesson COL-5B

1

How many advance Lessons have you now on hand?..........................

Print or use Rubber Stamp.

Name.. Student No.......................................

Street...Zone.......................... Grade...

City...State................................ Instructor....................................

Write your answers on the "Ans." line below each question. If more space is needed use reverse side of this page.

1. **What is the purpose of the purity coil in a color picture tube?**

Ans...

2. **For what purpose is d-c convergence employed in a color picture tube?**

Ans...

3. **During one horizontal sweep line which two voltages keep the beams converged?**

Ans...

4. **Which three controls are employed to control the d-c bias for the color picture tube?**

Ans...

5. **From the output of the color receiver's final video amplifier, the luminance signal passes through what circuit only for monochrome reception, before being applied to the picture tube?**

Ans...

6. **How do the I and Q signals each differ at the input to each of the three adder circuits?**

Ans...

7. **In the 15" tri-color picture tube, are focus and convergence obtained by electrostatic or by electromagnetic means?**

Ans...

8. **In the color picture tube, do the electron beams from the three guns strike a given dot trio simultaneously or in sequence?**

Ans...

9. **What is the name of the coil employed with a color picture tube to eliminate effects of the magnetic field between the mu-shield and the dot screen?**

Ans...

10. **What symbol represents the output from the blue adder circuit when the input for E_Q', E_I' and E_Y' is one volt each?**

Ans...

FROM OUR *Director's* NOTEBOOK

HELPING YOUR CUSTOMERS TO REMEMBER YOU

Advertising is nothing more than a constant reminder to the public that your product or service is available to them.

Helping customers to remember you is a most important part of your business. There are many ways you can do this—and without spending a great deal of money.

Use small-space ads in your neighborhood shopping news or home town paper. Have small stickers printed with your name, address and phone number and place these on the back of the cabinets of TV and radio sets you service. Also ask the customer to put one on the cover of his telephone book.

Another popular item is a calendar suitable for hanging in a home or office. These are available at a fairly reasonable cost from your local printer. Small thermometers for inside use also are good.

Use Uncle Sam's low cost postcards to announce "specials" or to remind the customers that it's time to have his radio or TV set checked for the winter. Send these to your old customers, or get a list of voters in your area and mail to these names.

Remember, good advertising is something that has helped many businesses grow. And in the final analysis, all that advertising does is serve as a reminder that YOU are the man to call for service.

Yours for success,

W. C. DeVry

DIRECTOR

PRINTED IN U.S.A.