ELECTRONIC COMPONENTS & APPLICATIONS

VOL.9 - No.3

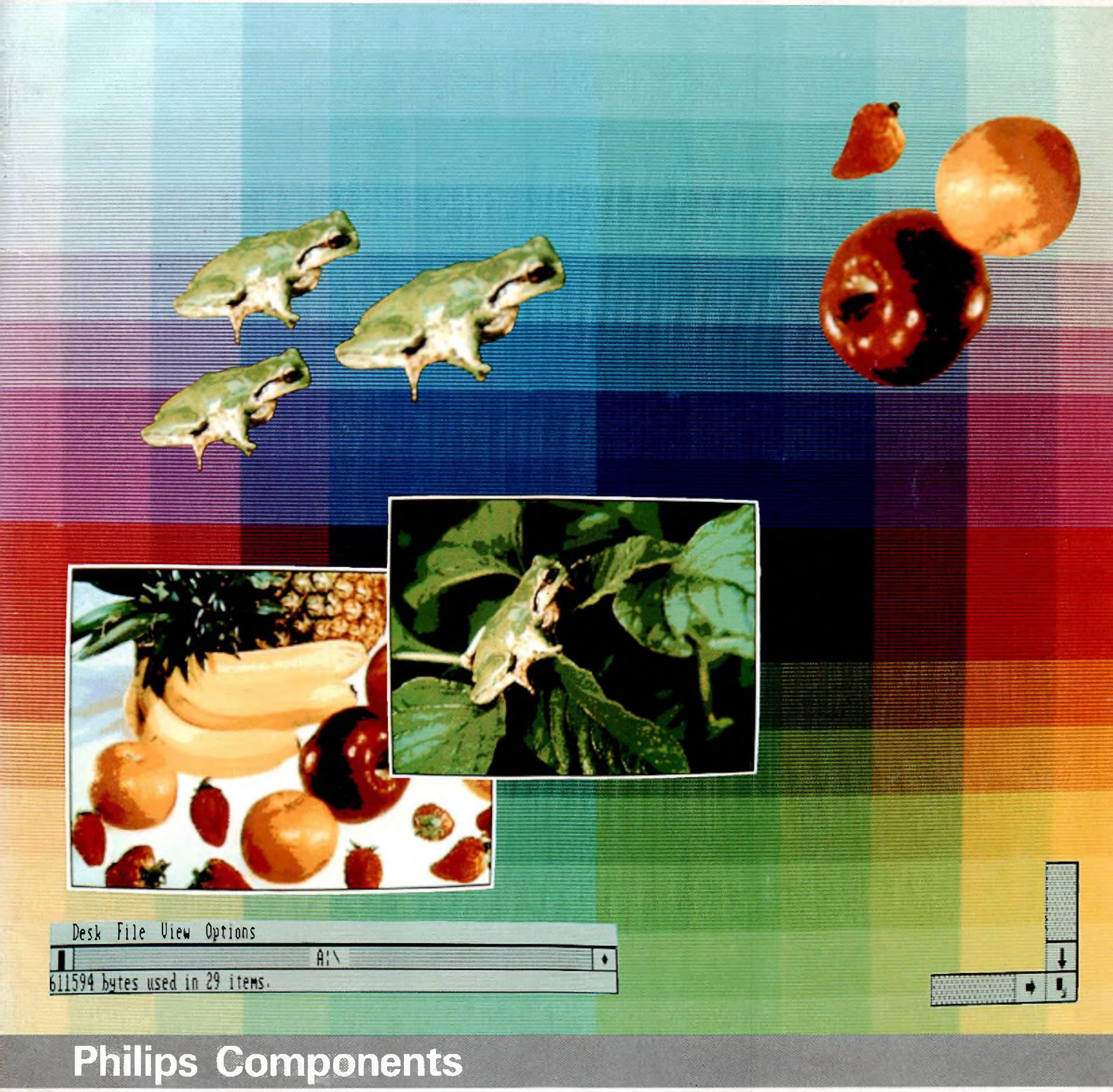

Philips Components

PHILIPS

ISSN 1041 – 6219

Electronic components & applications

Volume 9, No.3

Editor:
Ian L. A. Crick

Design and production:
Cees J.M. Gladdines
Bernard W. van Reenen
Jacob Romeijn

Design consultant:
Theo Kentie

Contents

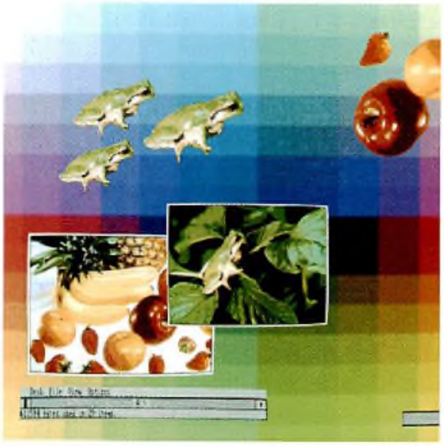

Most man-machine dialogues today take place via a keyboard, forcing the operators to remember a whole series of codes, syntaxes and formats. This process can be greatly simplified by preprocessing the data and presenting it as a series of icons or other graphic images that leave little doubt about the system's status and the responses required. But these new interfaces are costly, requiring, among other things, good quality pixel displays and powerful processors that can translate and handle the data and user responses. A cost-effective solution can be found in today's high-integration chips like Philips Components' SCC66470 video and system controller (VSC) featured in the article on page 159 of this issue and the SCC68070 32-bit microprocessor, a 68000-compatible processor with several on-chip features like a memory management unit and a direct memory access controller. The day of perfect man-machine communion may be at hand, but let's hope that as that day nears, it will continue to be the machine, rather than our humanity, that makes the compromises.

LCD flat panels

DOLF RUIGT

It's no surprise that LCDs have become the world's most popular displays for consumer products and measurement equipment. Renowned for their low power consumption and reliability, LCDs provide a flicker-free display that's easy to read and aesthetically pleasing. They are thin and lightweight and do not produce glare or harmful radiation. And, with the addition of built-in back-lighting, LCDs can be used under any ambient light condition.

Until recently their use has been confined to displaying numerical information using seven-segment arrays. Now the capabilities of LCDs have been vastly improved with the development of LCD flat panels for displaying text or graphics. LCD flat panels form a large, high-definition display using an array of minute LCD dots, or pixels, that can be switched on or off to display any desired pattern. Suitable applications are lap-top computers, word processors, overhead projector plates, industrial control monitors, etc.

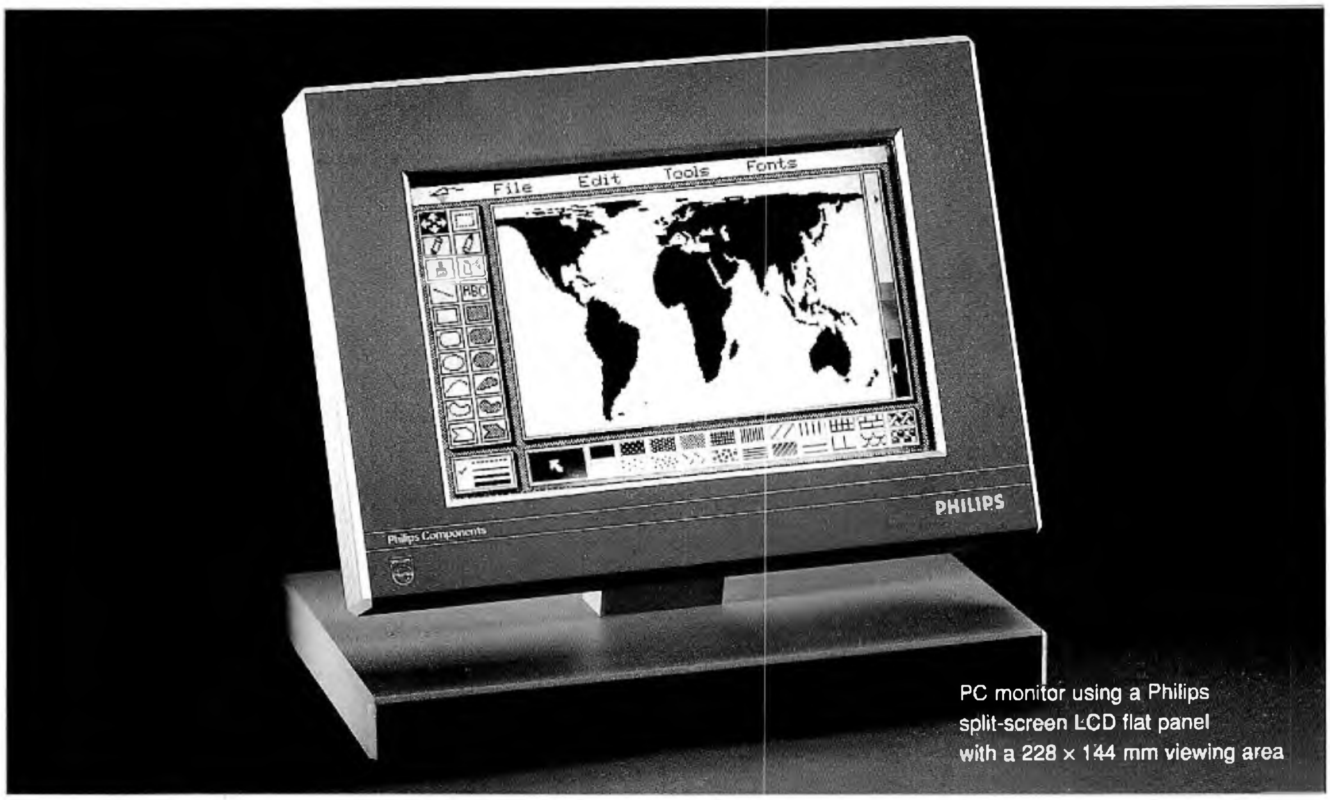

PC monitor using a Philips split-screen LCD flat panel with a 228 × 144 mm viewing area

Controlling the on/off state of such a large array of pixels has been a challenge to circuit designers, and has required further advancements in liquid crystal technology. Philips LCD flat panels are nowadays manufactured as a complete unit including all the necessary drive electronics and requiring only a minimum of control signals to be provided by the user.

The way in which these control signals are handled depends on the application and the source of the display information: a dedicated display can be controlled by discrete logic; a program driven display can use the output from a microprocessor, PC or computer terminal. An understanding of LCD drive techniques, therefore, will help the user achieve optimum performance from an LCD flat panel.

LCD DRIVE TECHNIQUES

In simple terms, an LCD pixel can have one of two states according to the voltage applied between the upper and lower electrodes (see box):

- the clear (off) state in which light will pass through the LCD to provide a bright area on the screen. This occurs when the pixel is switched off; i.e. when no voltage is applied across it
- the dark (on) state in which light is prevented from passing through the LCD to leave the impression of a dark spot. This is created by applying a small voltage across the liquid crystal.

Applying a DC voltage across a liquid crystal causes electro-chemical degradation. For this reason the drive voltage for the dark state must be alternating with a frequency of at least 30 Hz, to prevent flicker, and a residual DC component of less than 100 mV.

The method used to control the state of the LCD pixels, the drive technique, depends on the application:

- for simple LCDs, such as numerical displays, direct drive (also known as static drive) is used
- for LCD flat panels, the large number of pixels cannot be controlled by direct drive. Multiplex drive is the most cost effective way.

THE TN LCD IN OPERATION

LCDs make use of the anisotropic optical and electrical properties of some liquid crystals. Generally, nematic crystals are used which are cylindrical and spontaneously align themselves parallel with each other. The most common LCDs are twisted nematic (TN) types.

In a TN LCD, the liquid crystal is sandwiched between two glass plates coated with polymeric film which is rubbed to form orientation layers. These orientation layers anchor the liquid crystals in fixed directions that differ by 90° between the top and bottom plates. This has the effect of 'twisting' the crystal structure through 90° between the two plates. Polarizing filters are mounted outside the glass plates, in-line with the respective orientation directions and thus 90° to each other. The inner surfaces of the glass plates are coated with transparent electrodes that define the shape of the pixel to be displayed. The figure illustrates the operating principles of a direct drive character display.

With no voltage applied, plane polarized light from the bottom polarizer is rotated 90° by the waveguiding effect of the crystals. The polarization direction is then aligned with the top polarizer and the light passes unhindered through the LCD, giving a bright appearance (a).

When sufficient voltage is applied between the electrodes, the crystals try to align with the resulting electric field and the 90° twist in the optic axis is distorted. Light is no longer guided by the crystals, and passes directly through the LCD without changing its polarization direction and is absorbed by the second polarizer. The display then appears dark (b). When the voltage is switched off, the initial state is restored and the LCD is again transparent.

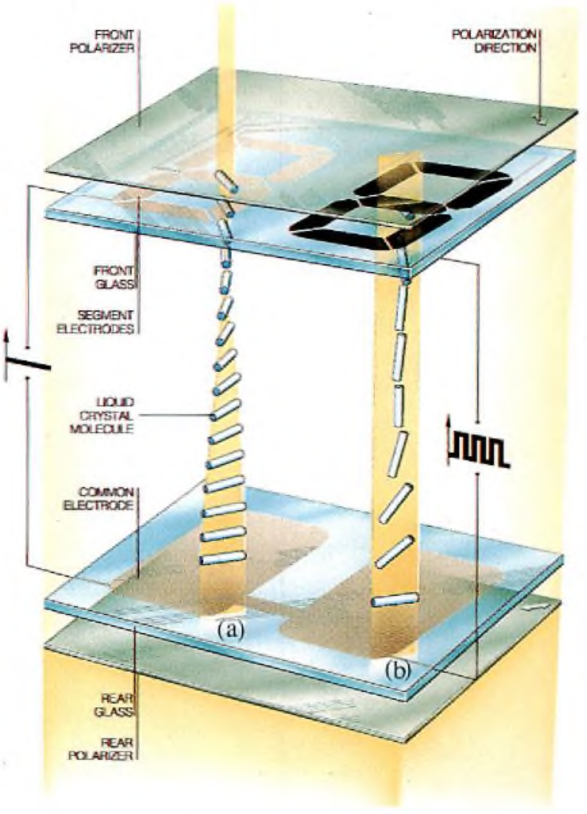

Direct drive

In directly driven LCDs, each pixel is controlled by applying a voltage between an electrode (one for each pixel) and the backplane which is common for all pixels. The backplane is driven by a symmetrical square-wave voltage with a maximum level greater than the voltage required to create a dark spot. To select a pixel (set in the dark state), this backplane voltage is inverted and applied to the appropriate pixel electrode to produce an RMS voltage sufficient to turn it on. The electrodes of all non-selected pixels are driven by the backplane voltage which results in a net zero voltage across them. Figure 1 illustrates a typical direct drive circuit with exclusive-OR gates controlling the voltage to the different pixels.

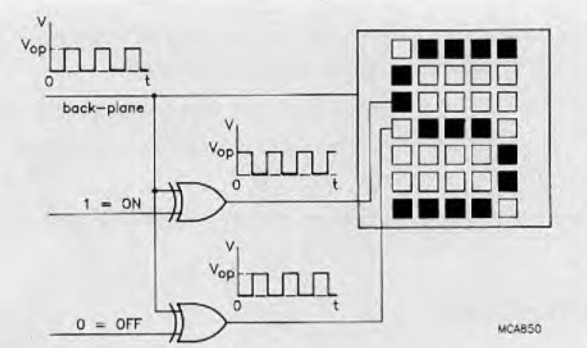

Fig.1 Part of a direct-drive circuit for an LCD, showing how exclusive-OR gates can be used to switch a pixel on or off

Multiplex drive

In an LCD flat panel, the electrodes comprise parallel conductors on the upper and lower glass plates, arranged perpendicular to each other to form a set of row electrodes and a set of column electrodes. Pixels are formed where row and column electrodes cross. The number of external contacts required is equal to the number of columns plus the number of rows, far fewer than would be required if direct drive were used.

A pixel is switched on (set in the dark state) by applying a voltage of sufficient RMS value between a row and a column. Individual selection of a pixel is made possible by multiplex drive. Multiplexing exploits the fact that liquid crystals take a finite time to change their angle of twist. Typical turn-on and turn-off times for LCDs range from 50 to 100 ms at room temperature. This allows a pulsed signal to be used to set a pixel in the dark state if it has an RMS value greater than the turn-on voltage.

By applying pulses of different phase to the row electrodes, each row of pixels is selected in sequence. As each row is selected, pulses representing the display pattern for that row are sent to the columns so that pixels are set in the dark or clear state according to the net voltage across them.

To eliminate the DC component, the voltage across each pixel is inverted after the display of every frame. In our flat panels we use six different bias voltage levels in two frames (normal and inverting) as shown in Fig.2. Voltage levels V_A

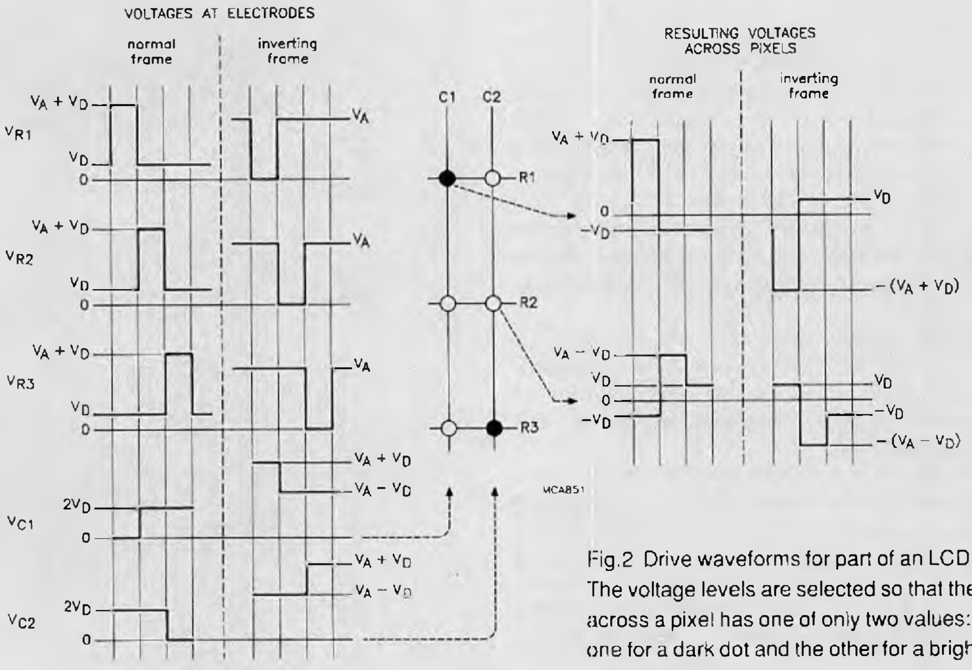

Fig.2 Drive waveforms for part of an LCD flat panel. The voltage levels are selected so that the RMS voltage across a pixel has one of only two values: one for a dark dot and the other for a bright dot

and V_D must satisfy the relationship $V_A \approx \sqrt{N} V_D$ where N is the multiplex ratio (1:N), which for flat panels is equal to the number of rows. The values of V_A and V_D must be selected according to the type of crystal used in the display and the desired overall brightness.

By using six bias voltage levels we get an even display with the best possible discrimination for operation at a convenient drive voltage level. Discrimination is the ratio of ON to OFF RMS voltage and decreases as the multiplex ratio increases as shown in Table 1. Clearly, at the multiplex ratios (1:200 or more) needed to control an LCD flat panel, the discrimination is low. When the discrimination is low in conventional twisted nematic LCDs, the viewing angle for an acceptable contrast ratio (the brightness ratio of clear to dark pixels) is too narrow. We've overcome this problem by applying new liquid crystal technology.

TABLE 1
Effect of multiplex ratio on discrimination

multiplex ratio, 1:	1	2	16	64	100	200
discrimination, V_{on}/V_{off}	∞	2.41	1.29	1.134	1.106	1.073

HIGH CONTRAST LCD TECHNOLOGY

To improve the contrast ratio for high multiplex ratios it's necessary to use a display that can switch between the dark and clear states within a very narrow voltage range. The achievable contrast ratio is illustrated by the steepness of the contrast/voltage curve (Fig.3), which depends on the type of liquid crystal used and the viewing angle. Unfortunately, the liquid crystals available with current technology don't have a sufficiently steep curve for use with high multiplex ratios.

Twisted nematic (TN) LCDs use liquid crystal twisted through 90° (see box) as this allows the use of crossed polarizers to indicate the on/off state of the pixels. As voltage is applied to a TN display, the contrast change observed is due to a change in the orientation of the crystals within the display. This effect can be quantified by calculating the angle of the crystals at the centre of the LCD, known as the mid-layer tilt. In theory, the greater the change in mid-layer tilt for a given change in voltage, the greater the achievable contrast ratio.

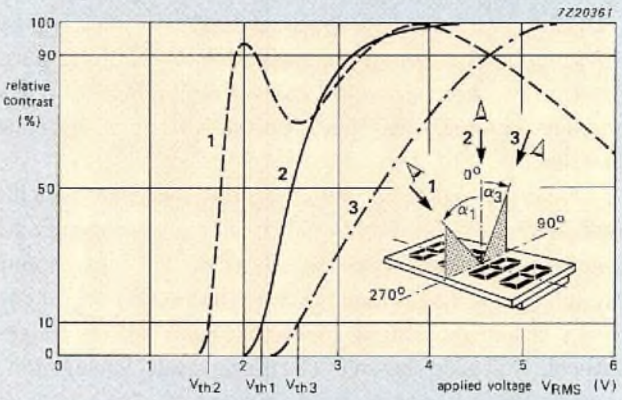

preferred viewing direction 6 o'clock (270°)

Fig.3 Relative contrast as a function of applied voltage, measured at three viewing angles (see insert) for a 90° twisted cell. In this diagram, α is the angle from the vertical (incident angle) and ϕ is the azimuth angle measured in a clockwise direction

Curve 1: α = 50°; ϕ = 270°
Curve 2: α = 0°; ϕ = 0°
Curve 3: α = 40°; ϕ = 90°

Figure 4 shows the mid-layer tilt for LCDs with different twist angles. The curves indicate that the contrast ratio of an LCD can be made much higher by increasing the crystal twist angle from 90° to between 180° and 270°. LCDs using this principle are known as Super Twisted Nematics (STN) displays.

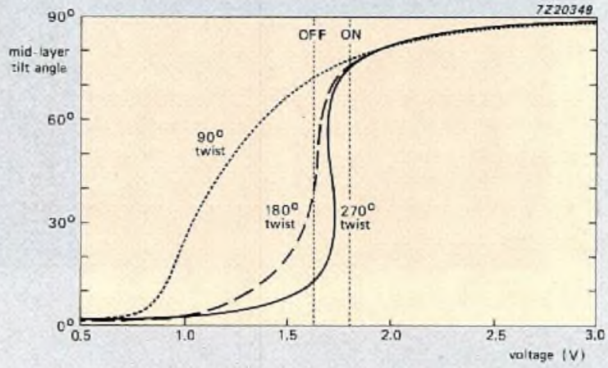

Fig.4 Mid-layer tilt as a function of voltage for 90°, 180° and 270° twist angles

Super twisted nematic (STN) displays

In STN displays, the larger twist angle is achieved by using a special cholesteric-doped nematic liquid crystal and by changing the direction of the orientation layers on the glass plates. The cholesteric molecules have a helical screw structure which ensures that all crystals twist in the same direction.

Due to the high twist angle, STN displays cannot use the light guiding properties of liquid crystals as do conventional TN displays. In a TN display, most of the light passing through it is turned through 90° by the twisted crystals to give a bright uncoloured appearance with no net voltage applied. However, in an STN display, the waveguiding property of the crystals is insufficient to allow light to follow the larger twist, so it passes directly through the cell. Light leaving the cell is not white but is coloured according to the voltage applied, due to the birefringent effect. STN displays make use this effect.

Birefringent effect

Crystalline materials which exhibit birefringence impose a phase shift on light passing through them which depends on the angle of polarization relative to the optical axis of the crystals. LCDs use cylindrical crystals which have an optical axis in the direction of their longest side.

When light enters an untwisted liquid crystal with its polarization axis in the same direction as the optical axis (i.e. by aligning a polarizer with the long side of the crystals) the light will leave the crystal with the same polarization axis but with a wavelength dependent phase shift (Fig.5(a)). If light with a polarization axis perpendicular to the optical axis passes through the crystal it undergoes a different wavelength dependent phase shift (Fig.5(b)).

If the angle of the polarizer is changed so that light enters at 45° to the optical axis (Fig.5(c)), the light is resolved into two components, one along the optical axis

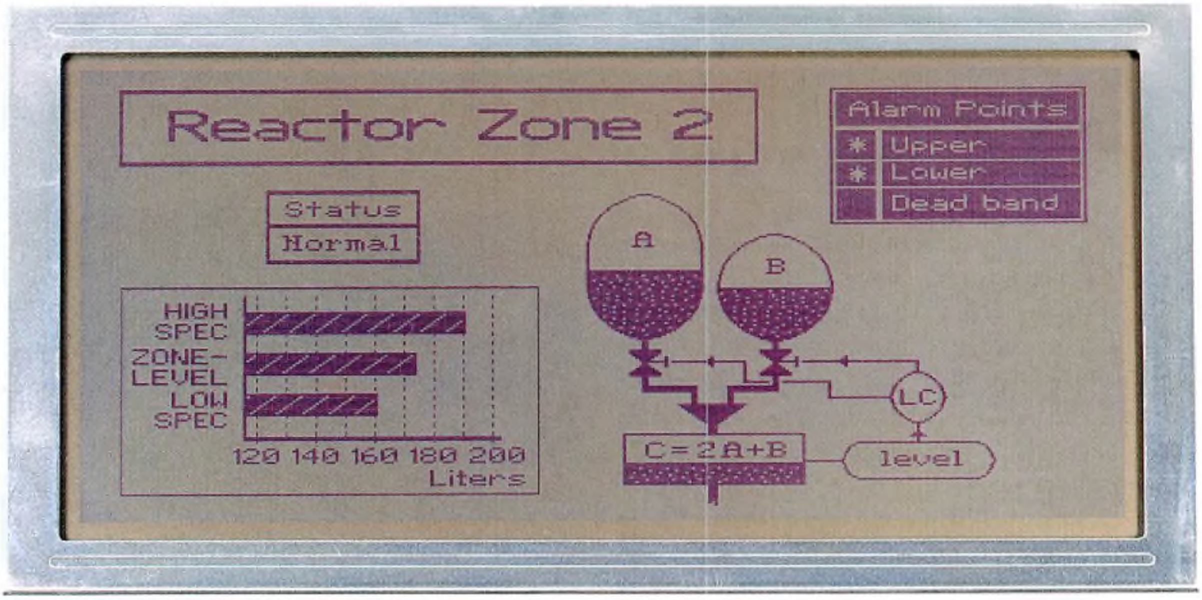

Philips LBG404R-30 640 × 200 pixel LCD flat panel using STN technology

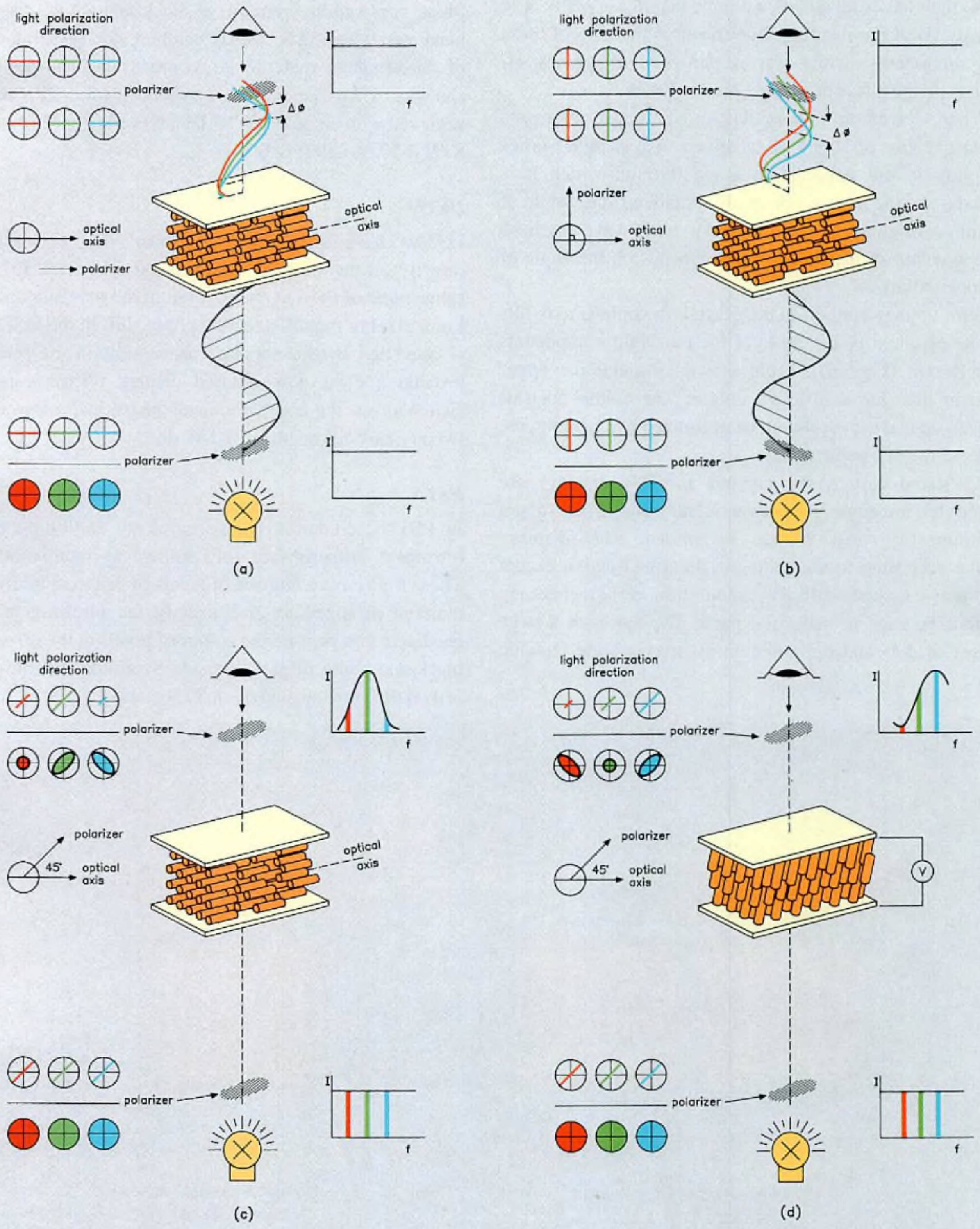

Fig.5 The highly birefringent properties of liquid crystals allow STN cells to be used to make displays with high resolution and contrast. (a) and (b) illustrate the difference in chromatic phase shift (Δφ) in light entering in-line with and 90° to the optical axis. (c) and (d) show that with polarizers at 45° to the optical axis, the display has a different colour for the off and on states

and the other perpendicular to it. Light emerging from the crystal then has components with unequal phase shifts. The intensity (I) of the resulting light beam is the sum of these two components, which for a particular frequency (f) depends on the phase difference between them.

When viewed through a polarizer (the upper polarizer), the brightness of light at a given wavelength varies according to the polarization angle through which it is viewed – i.e. the light is elliptically polarized. The angle of maximum brightness is different for each wavelength so that the colour of the light viewed depends on the angle of the upper polarizer.

With voltage applied to the crystal, the optical axis tilts and the resultant phase shifts of the two light components are different (Fig.5(d)). Light viewed through the upper polarizer then has a different colour. The colour contrast between on and off pixels can be optimized by changing the angles of the two polarizers.

As stated earlier, the crystals in STN displays are twisted by an angle of between 180° and 270° to get maximum tilt when voltage is applied. STN displays operate according to the principle described above except that the twist causes different colouration. STN technology can thus be used to make flat panel displays with a large number of dots and optimal contrast over a wide viewing angle.

Black-and-white STN displays

Most applications require a black-and-white display. A black and white STN display can be made by using a layer of birefringent material to compensate for the colour changes when the cell is in the off-state. This can be achieved with a double STN (DSTN) cell (Fig.6(a)) or a foil STN (FSTN) cell (Fig.6(b)).

DSTN

DSTNs have a second non-driven STN cell mounted directly on the viewing side of the display cell. It has the same angle of twist as the first but in the opposite direction. For a pixel in the off-state, the phase shift in the first crystal is cancelled by the opposite phase shift in the second to provide a clear non-coloured display. When a pixel is switched on, the combination of phase shifts through the two crystal cells results in a dark dot.

FSTN

In FSTNs, colour is compensated by exploiting the birefringent properties of foils known as retardation foils. These foils have a number of layers of different birefringent material arranged to give exactly the birefringent effect needed to compensate the colour of pixels in the off-state. A black-and-white display is made by simply mounting this foil on the viewing side of an STN display.

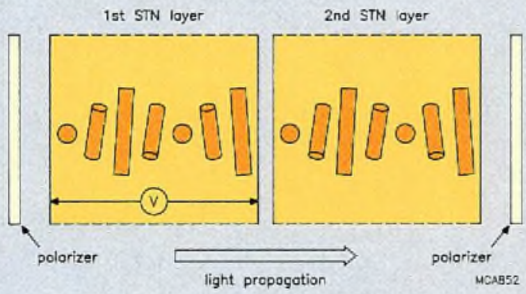

Fig.6(a) Double Super Twisted Nematic (DSTN) cell

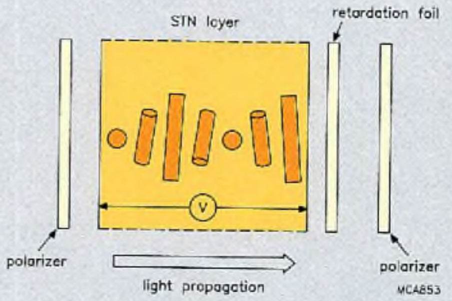

Fig.6(b) Foil Super Twisted Nematic (FSTN) cell

FLAT PANEL DRIVERS

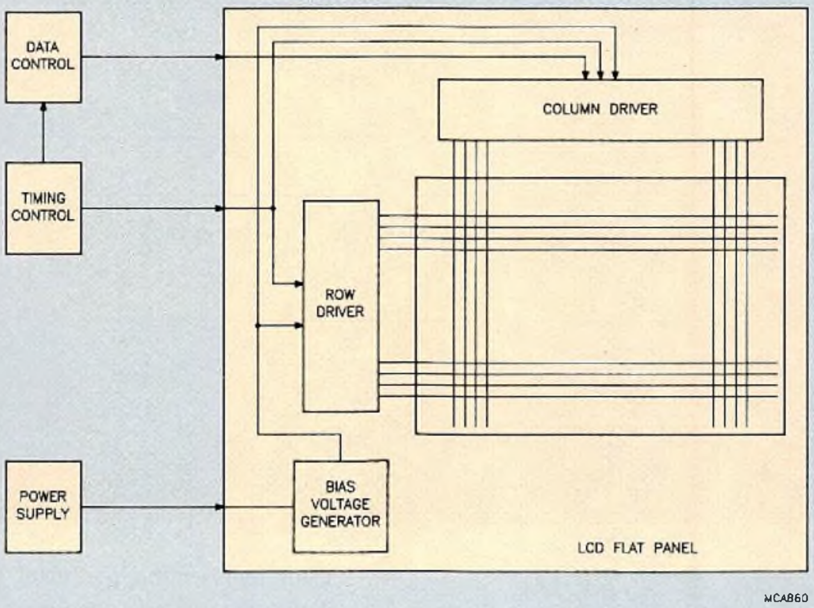

Fig.7 Drive circuitry for an LCD flat panel

As shown in Fig.7, an LCD flat panel requires only power, data and timing for operation. All the drive circuitry for setting pixels on or off is integrated in the LCD flat panel and comprises row and column drivers and a bias voltage generator. Figure 8 indicates how the six voltage levels required for flat panels must be switched to the rows and columns.

The figure shows that a row driver switches between four levels according to the select/non select state of the relevant row electrode and to whether it is a normal or an inverting frame (the voltage across each pixel must be inverted every other frame to prevent electrochemical degradation). The row drivers send a single pulse to each row during one frame to display the information from the column drivers.

The column drivers control the pixels by switching between four levels according to the on/off state of the relevant pixels and to whether it is a normal or an inverting frame.

Figures 9 and 10 are block diagrams of the row and column drivers.

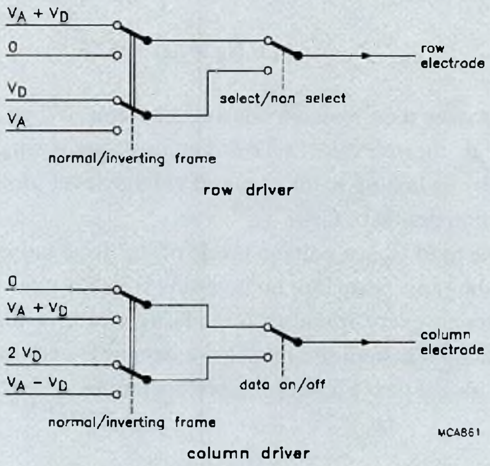

Fig.8 Switching requirements of LCD flat panel drivers

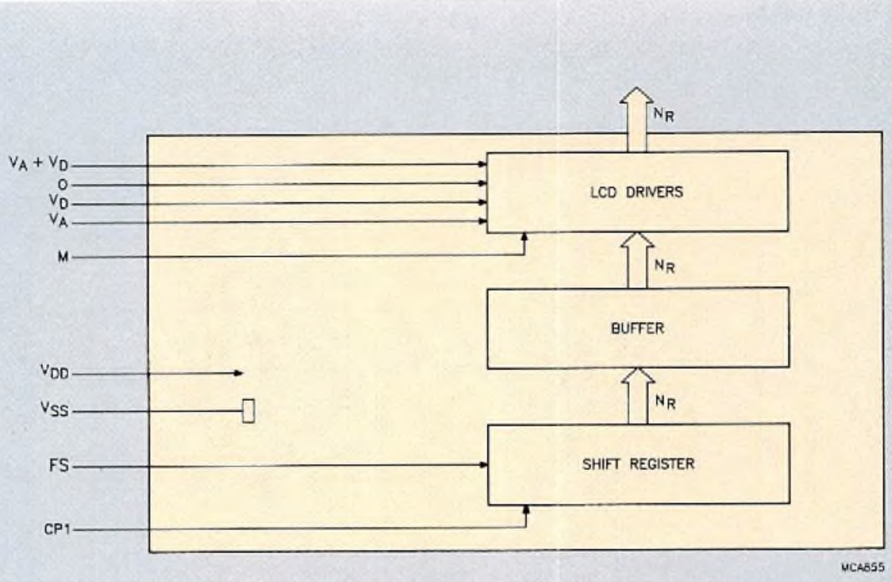

Fig.9 Row driver for an LCD flat panel with N_R rows

Row driver

The row driver uses a shift-register to select each row of the display in turn by shifting through a single logic 1. The shift register has a bit length equal to the number of rows in the display with each bit connected, via a buffer, to a single LCD driver. Frame synchronization signal FS, at the frame frequency, initiates the circuit by setting the first bit of the shift register to logic 1. This single logic 1 is then clocked through the shift register by CP1, the frequency of which is set by the number of rows (N_R) and the frame frequency (FS):

$$f_{CP1} = N_R \times f_{FS}$$

Each row is then selected once every frame. When a row is selected, the relevant LCD driver provides a single drive pulse by switching to the required voltage level for the pulse repetition period of CP1.

The mark/space voltage levels of the drive pulses are set according to a normal or an inverting frame. Logic signal M is inverted every frame to provide normal/inverting frame selection. When all the rows have been selected, the circuit waits for the next FS pulse before beginning the next frame.

Column driver

As each row is selected, the column driver provides a set of pulses corresponding to the pixel pattern for one row – one pulse for each column.

Data representing the pixel pattern for one row is clocked into a data presentation latch in four-bit nibbles (D0 to D3) by a data scrambler controlled by clock-pulse CP2. Since this data must be made available during the period of one row selection pulse, the frequency of CP2 is determined by:

$$f_{CP2} = f_{CP1} \times N_C/4$$

where N_C is the total number of columns in the display. When the data presentation latch is full, the data is clocked into a shift register where it is held until CP1 initiates display of the next row. On the falling edge of CP1 the data from the shift register is latched via a level shifter (buffer) into the LCD driver which sets each column voltage to one of four levels. Signal M determines whether the voltages selected are for a normal or an inverting frame.

Split-screen drive

By using two sets of column drivers connected on opposite sides of the display, it's possible to double the number of pixels in the display while using the same values of CP1 and CP2. This allows a flat panel LCD with larger dimensions, or improved resolution, for the same multiplex rate.

As shown in Fig.11, two sets of drivers are used to control the upper and lower sections of the display. The row drivers operate synchronously while the column drivers use two sets of data.

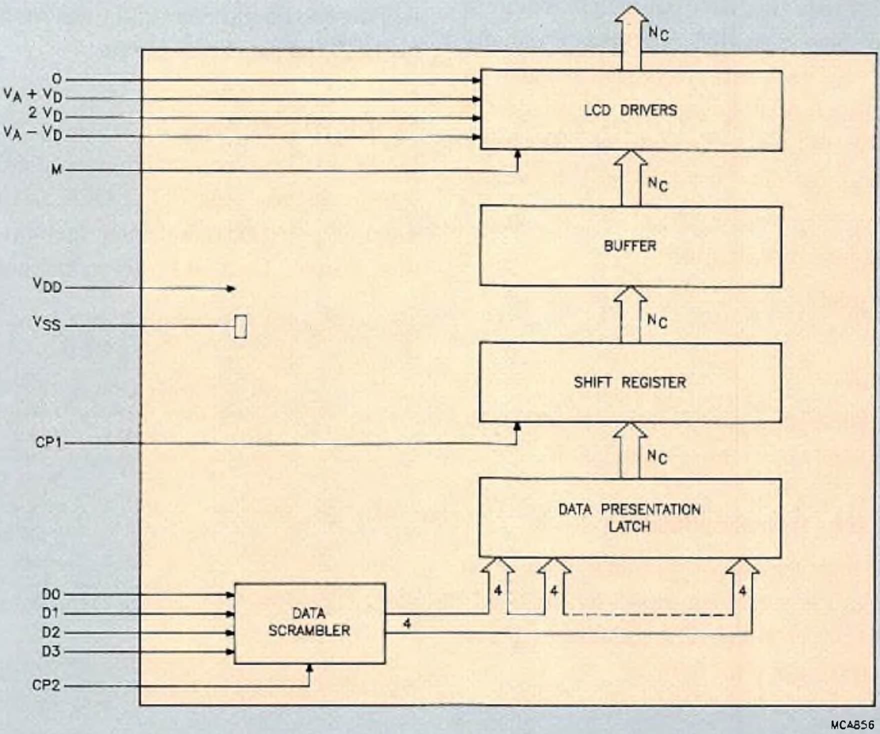

Fig.10 Column driver for an LCD flat panel with N_C columns

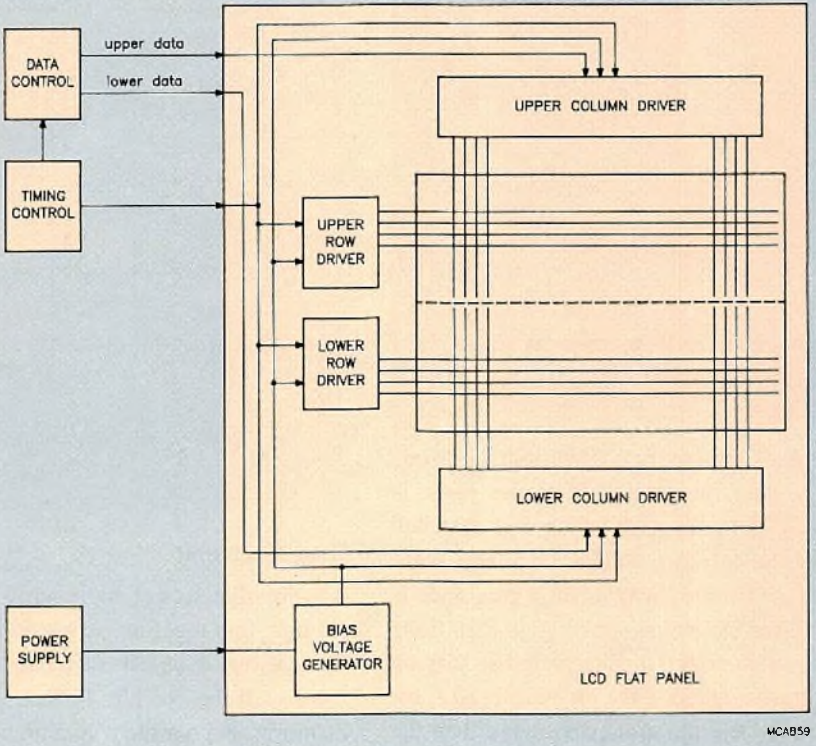

Fig.11 Split-screen drive

LCD FLAT PANELS WITH GREY SCALES

Many potential applications for LCD flat panels require a more sophisticated display than that provided by simply switching on or off an array of pixels. Particularly in monitoring applications it's necessary to have a gradation of the pixel intensity between fully on and fully off. These are known as 'grey scales' and they're particularly important for:

- graphics (more than one line or grid)
- increasing picture quality
- highlighting text
- representing colours.

The simplest way of generating grey scales in an LCD flat panel is by the method known as 'frame modulation'.

Grey-scale generation by frame modulation

The principle of grey-scale generation by frame modulation can be understood from Fig.12, which shows schematically the absorption of a pixel (percentage of light absorbed) as a function of the RMS voltage applied to it.

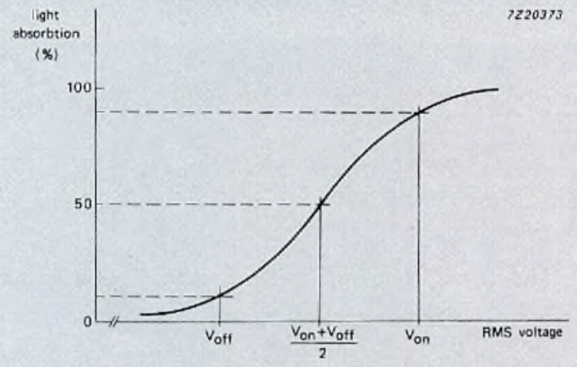

Fig.12 Light absorption as a function of RMS voltage applied to the pixel

In a multiplex-driven display, two RMS voltage levels are important: V_{on} – the voltage at which the pixel is switched on, and V_{off} – the voltage at which it is switched off. These are, in fact, the only two voltages available within the LCD flat panel, so the only way to get a grey scale is to vary the duration of the ON voltage relative to that of the OFF voltage, which can, in effect, be interpreted as varying the average RMS voltage applied to the pixel. In Fig.12, for example, if the ON and OFF durations are equal, then the average RMS voltage applied to the pixel will be $(V_{on} + V_{off})/2$ and the apparent absorption (i.e. the visual effect) will be about 50% of its maximum value. For other average values of RMS voltage, the apparent absorption will depend on the slope of the absorption curve (Fig.12) for the LCD flat panel being used.

Four-level grey scale

Figure 13 is a block diagram of a circuit for generating a four-level grey scale (ON, OFF and two grey levels) by toggling between two display memories during a cycle of three frames. The four levels are defined in Table 2:

TABLE 2
Four-level grey scale

frame 1	frame 2	frame 3	display state	display value
ON	ON	ON	black	fully ON
ON	ON	OFF	dark grey	2/3 ON
OFF	OFF	ON	light grey	1/3 ON
OFF	OFF	OFF	white	fully OFF

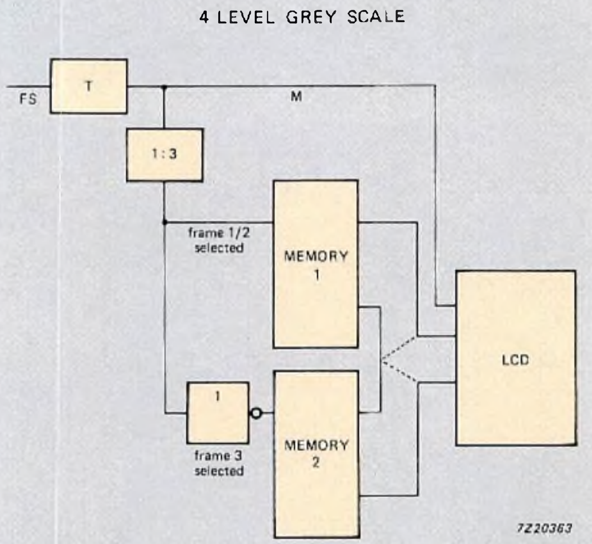

Fig.13 Block diagram of a circuit for generating a four-level grey scale

Grey level limit

It's possible to get more grey levels by adding another memory and toggling between them during a cycle of more frames, but if on/off switching occurs at less than 50 Hz there will be visible flicker. Faster switching between memories is possible with a higher frame frequency but this is limited by the maximum clock frequency (CP2) available from the drivers.

INTERFACING LCD FLAT PANELS

An LCD flat panel requires control signals, data signals and supply voltages to be provided by the user. Figure 14 indicates typical voltage levels and pulse repetition frequency (PRF) values for the control signals of a 640 × 400 split-screen LCD flat panel. Note that for some LCD flat panels, M is provided internally.

According to the application, an LCD flat panel can be interfaced with the source of the display information using discrete electronics or with flat panel controller ICs or circuit boards. Some suitable flat panel controller ICs for interfacing Philips LCD flat panels are listed in Table 3.

TABLE 3
Flat panel controllers

data bus interface		CRT monitor output interface	
Cirrus Logic	GD610/GD620	Hitachi	HD66840
Hitachi	HD63645/64645	Sanyo	CF77007FT
Seiko Epson	SED1351	Seiko Epson	SED1341/1345
Oki	MSM6255		
Toshiba	T7779		
Yamaha	V6366/6355		

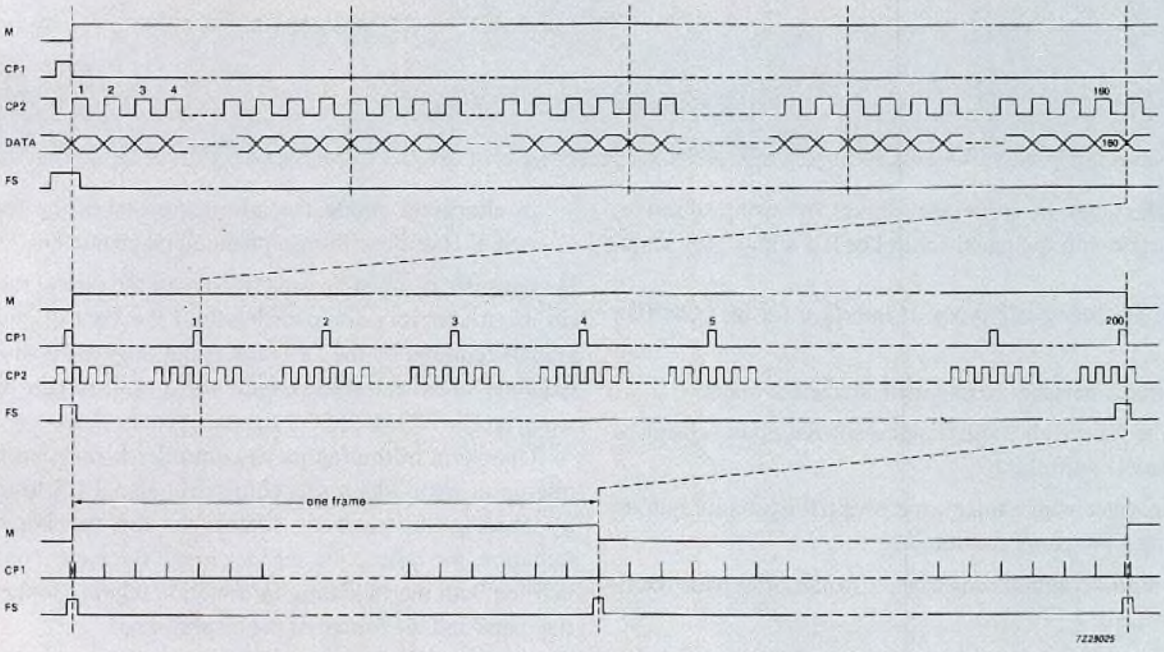

control signal	function	voltage level(s) (V)	PRF
M	normal/inverting frame selection	0/5	30 Hz
CP1	row selection timing	0/5	12 kHz
CP2	clocking in data to column driver	0/5	1.92 MHz
DU_{0-3}	four-bit data words for upper display	0/5	–
DL_{0-3}	four-bit data words for lower display	0/5	–
FS	frame synchronization	0/5	60 Hz
V_{DD}	positive supply voltage for logic	5	DC
V_{SS}	negative supply voltage for logic	0 (ground)	DC
V_{O}	contrast adjustment voltage	–0.5...–25	DC

Fig.14 Example of control signals for a 640 × 400 split-screen LCD flat panel

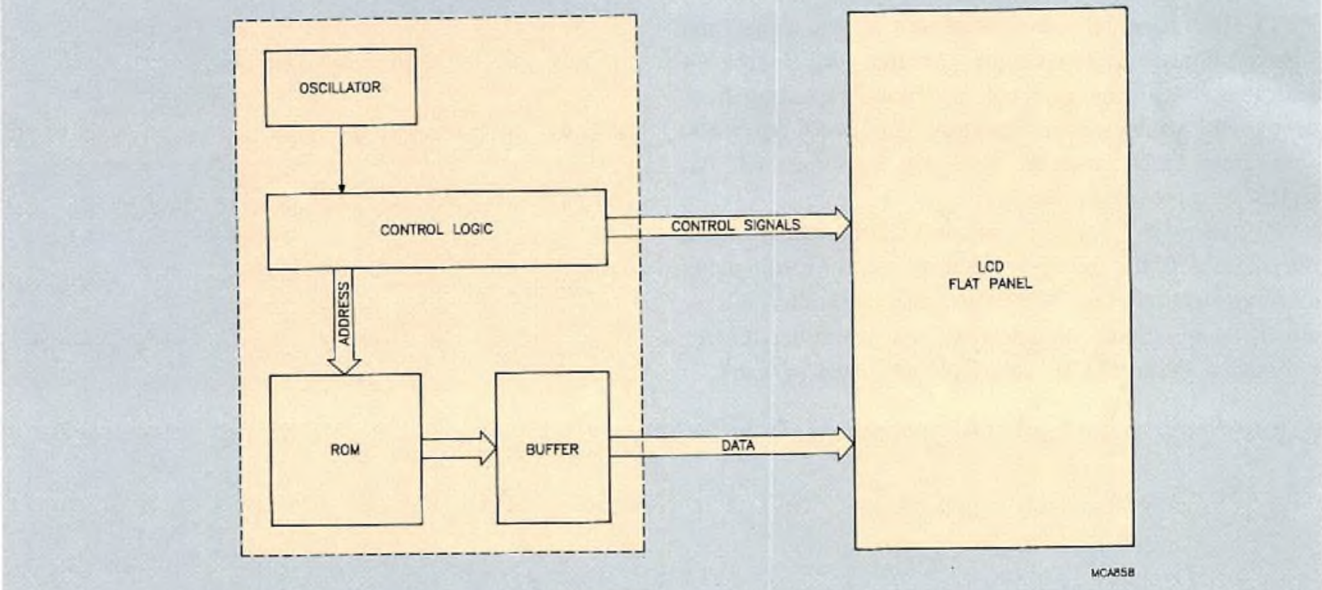

Fig.15 Block diagram of direct interface

Grey scales can be provided either by using discrete electronics or with flat panel controller ICs with a grey scale facility.

There are four basic types of interface for an LCD flat panel:

- the direct interface – using dedicated electronics
- the interface with a microprocessor data bus – using a flat panel controller IC
- the interface with a microprocessor CRT monitor output – using a flat panel controller IC
- the plug-in computer interface – using a flat panel controller card.

Direct interface

Dedicated to the display of a small number of predetermined pictures, a direct interface (Fig.15) includes sufficient memory (ROM) to store the required number of pictures plus timing circuitry for clocking out the data in a fixed sequence. The interface also provides all the relevant control signals.

Interface with a microprocessor data bus

A microprocessor can be used to provide digital information representing the image to be displayed by the LCD flat panel. How this information is handled depends on the operating mode:

- in **graphics mode** the information takes the form of code describing the on/off state of each pixel
- in **character mode** the information takes the form of ASCII code describing alphanumeric characters.

A controller IC must be used to convert the digital message on the microprocessor data bus into the control and data signals required by the LCD flat panel. Figure 16 shows an example of an interface circuit for a split-screen display using an Oki MSM6255GS flat panel controller.

Operation of the flat panel controller is initiated by the microprocessor which sets chip-select signal CS to logic 0 by sending the relevant address to the decoder. After initiation, the instruction register in the flat panel controller is filled with the following information relating to the LCD flat panel and the format of the display data:

- number of columns
- number of rows
- multiplex ratio
- data output format – serial, four-bit or 2 × four-bit
- format of display control signals
- graphics or character operating mode
- address in RAM of the first byte of display data.

The flat panel controller operates in two phases: the *display phase*, during which pixel information is read out to the LCD flat panel, and the *data exchange phase*, during which display data is exchanged with the microprocessor via data bus (D_{0-7}). Signal DIEN (Display Enable) indicates the operating phase to the microprocessor. The data handling sequence depends on the display mode.

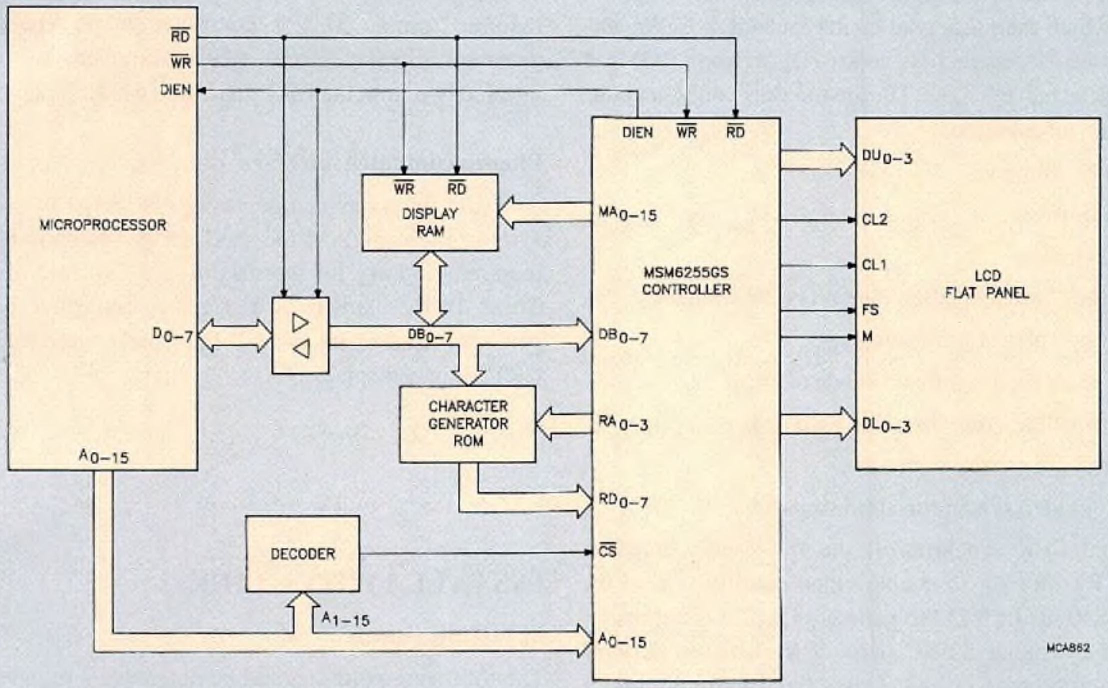

Fig.16 Interface with a microprocessor data bus

Graphics mode

In graphics mode, each bit stored in the display RAM represents one pixel of the display.

During the data exchange phase, the microprocessor writes or reads one byte of display data by setting read/write signals $\overline{WR}$ and $\overline{RD}$. The microprocessor selects the required byte using address bits A_{0-15} and the flat panel controller sets the relevant RAM address MA_{0-15}. Data is transferred along bus DB_{0-7}.

During the display phase, one byte of display data is transferred from RAM to the flat panel controller (at DB_{0-7}) which converts it into the required format for output to the LCD flat panel.

Character mode

In character mode, each byte stored in the display RAM is the ASCII code for one character of the display. The pixel pattern (a 7 × 9 dot matrix for example) for every ASCII character is stored in the character ROM.

The data exchange phase follows the same sequence of operation as for graphics mode, except that the data represents characters rather than pixels.

During the display phase, one byte representing the pixel pattern for one row of a character is transferred from the character ROM to the flat panel controller via RD_{0-7}. The address of this byte is determined by a combination of the ASCII code sent from RAM via bus DB_{0-7} – indicating the required character; and row address RA_{0-3} – indicating the relevant character row. The flat panel controller then formats the data at RD_{0-7} for output to the LCD flat panel.

Interface with a CRT monitor output

With appropriate interface circuitry, an LCD flat panel can be driven by the digital video signals from the output of a PC or microprocessor. For operation without grey scales, one, or a combination of, the colour drive signals (R,G or B) or the intensity signal (I) can be used as signal source. Generally the best possible display is achieved with the green drive G. LCD flat panels with grey scales can represent colours with different shades of grey by combining the R,G and B signals.

Figure 17 is an example of an interface circuit for a split-screen display using an Hitachi HD66840 flat panel controller. Power on/reset signal $\overline{RES}$ initiates the flat panel controller which then sets read-enable pulse $\overline{RE}$ LOW and reads out four-bit instruction codes (D_{0-3}) from ROM at addresses selected by A_{0-4}. The instruction codes include the following information:

- number of columns
- number of rows
- multiplex ratio
- data output format – serial, four-bit or 2 × four-bit
- format of display control signals
- type of video input (graphics mode of PC)
- choice of video signal source (R,G,B or I)
- number of grey scales to be used
- format of video synchronization signals.

Clock signal CLK synchronizes the flat panel controller with the CRT monitor to enable video data to be read in. The HD66840 uses a VCO to generate CLK at a frequency determined by signal SYNC derived from the horizontal synchronization input (V_{sync}). Other flat panel controllers require CLK to be provided by the PC. Depending on the graphics mode of the PC, video signal R,G,B or I is written into RAM (on pulse $\overline{WR}$) in bytes representing the on/off state of eight pixels in the LCD flat panel.

The image data is sent to the LCD flat panel by reading out (on pulse $\overline{RD}$) display bytes from RAM and setting the output data lines (DU_{0-3} and DL_{0-3}) according to the required format. This is controlled by a separate clock generator (display clock) which eliminates the effect of interference from the CRT that could cause flicker.

Plug-in computer interface

An LCD flat panel can be easily connected to a computer system by using off-the-shelf PCBs containing all the required circuitry for interface to a PC or microprocessor. These PCBs, known as flat panel controller cards, are generally used where an LCD flat panel is used in place of a CRT for data display.

INSTALLATION GUIDE

Mounting aspects

The following points should be noted when mounting LCD flat panel displays:

- mount the display as close as possible to the front panel of the equipment. Use the viewing angle range in the specification to determine the optimum mounting angle

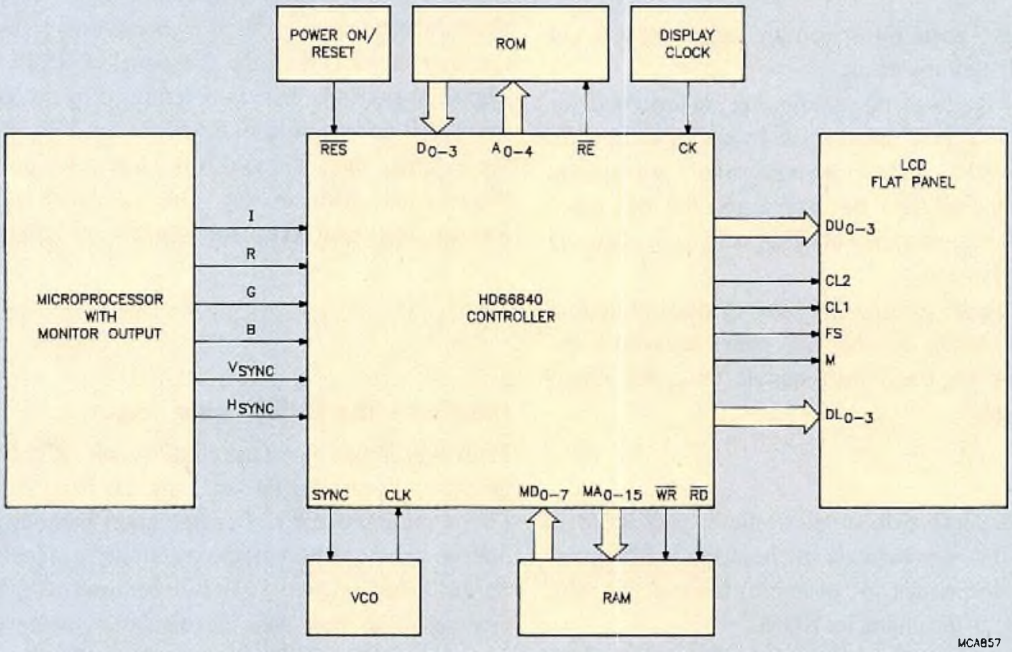

Fig.17 Interface with a CRT monitor output

- when fitting the display, apply minimum mechanical pressure evenly between the frame and the full length of the display. No pressure should be exerted on the seal or on the display areas
- ensure that housings and frames are designed to minimize bending
- protect the front of the display from scratches, humidity and dirt with a transparent plate made of glass or non-birefringent acrylic. The plate must be spaced 0.5 to 1 mm from the front of the display.

Illumination

Since LCDs don't generate light, they need illumination to be readable in low ambient light. For reflective type displays, auxiliary front lighting can be used to improve readability. The light source should illuminate the display at an angle close to the normal viewing direction to minimise reflection and shadows. A more effective method is to use a transflective display with back-lighting from electro-luminescence (EL) foil or fluorescent tubes.

EL foil

Mounted at the back of the LCD flat panel (see Fig.18(a)), an EL foil is a capacitive sheet comprising a dielectric film sandwiched between two conductive sheets, one of which is transparent. The dielectric film is impregnated with phosphors that cause the sheet to illuminate when a voltage is applied. The luminescence of the sheet depends on the amplitude and frequency of the applied voltage and the type of phosphors used. Typically, the EL foil is supplied by 100 V (RMS) at 600 Hz.

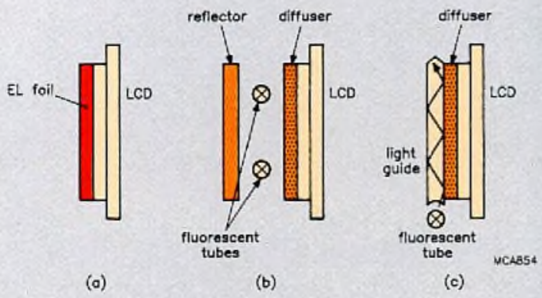

Fig.18 Back-lighting methods:
(a) EL foil
(b) fluorescent tubes with back reflector
(c) fluorescent tube with light guide

The lifetime of an EL foil – specified as the time required for the brightness to drop by half, depends on the type of phosphors used. An EL foil with standard phosphors has an expected lifetime of 2000 hours while if 'long life' phosphors are used, the lifetime can be as much as 10 000 hours. Lifetime increases if the EL foil is operated at low temperatures and with a low voltage. To allow easy replacement, the EL foil must be mounted in an accessible position.

Fluorescent tube

A brighter display, at the expense of greater size and weight, is possible using fluorescent tubes. Figure 18(b) shows a display with two tubes mounted behind the LCD, backed by a reflector foil. Alternatively, LCD flat panels can employ a side mounted fluorescent tube coupled to a light guide (Fig.18(c)). The light guide distributes the light by internal reflection for a more even display but adds extra weight.

Environmental requirements

LCD flat panels should be stored in a dust-free environment and protected from direct sunlight. Avoid moving a display from a cold area to a humid or hot area, as this leads to condensation which can attack the polarizers. Table 4 indicates the range of temperatures and humidities that an LCD flat panel can withstand.

TABLE 4
Environmental requirements for LCD flat panels

environmental factor	value
operational temp. range (°C)	0 to +50
storage temp. range (°C)	−25 to +70
max. relative humidity (%)	75

Handling and cleaning

Care should be taken when handling LCD flat panels as scratches will permanently damage the polarizers. Preferably, gloves should be worn to avoid marking the display with fingerprints.

Displays should be cleaned using a soft, clean, lint-free, dry tissue. If necessary, tissue moistened with benzine or freon should be used to remove more difficult marks. Other solvents or water must be avoided as they may attack the polarizers.

3F3 Ferrite – at the core of advanced SMPS design

WIM WAANDERS

A new ferrite, designated 3F3, offers a startling new advance in circuit miniaturization, the goal in many markets such as aerospace, telecommunications and EDP. With low power losses across a broad frequency and temperature range, transformers using 3F3 can operate at much higher frequencies than previously attainable. Higher frequency operation leads to higher power throughput and/or smaller dimensions. This allows Switched Mode Power Supplies (SMPSs), 3F3's main application, to be made much smaller.

In this article we focus on 3F3 and its advantages for SMPSs.

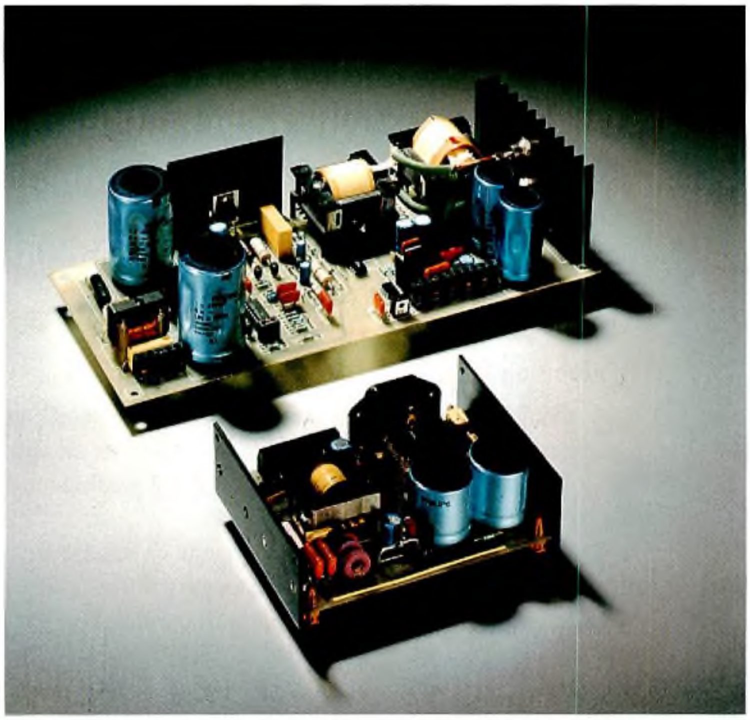

Although both SMPSs perform a similar function, 3F3 ferrite was used in the transformer and chokes of the smaller SMPS, so considerably reducing size and weight

PACKING IN MORE POWER

The power throughput of a ferrite core transformer is directly proportional to both the operating frequency and the flux density. So increasing the operating frequency results in either an increased power throughput, for a given core volume; or a smaller core volume, for a given power requirement. This is summarized as:

$$P_{th} = W_d \times C_d \times f \times B$$

where W_d = winding design parameter
C_d = core design parameter
f = switching frequency in Hz
B = induction in T

With the advent of components such as power MOSFETs and multi-layer ceramic capacitors, the trend in SMPS design is towards a much higher operating frequency, of around 1 MHz or higher (see Fig.1). However, with existing transformer core designs, increasing the frequency substantially increases the core losses. This means an increase in core volume to maintain the desired power throughput without overheating. The transformer core has therefore been one of the main limitations to SMPS size reduction.

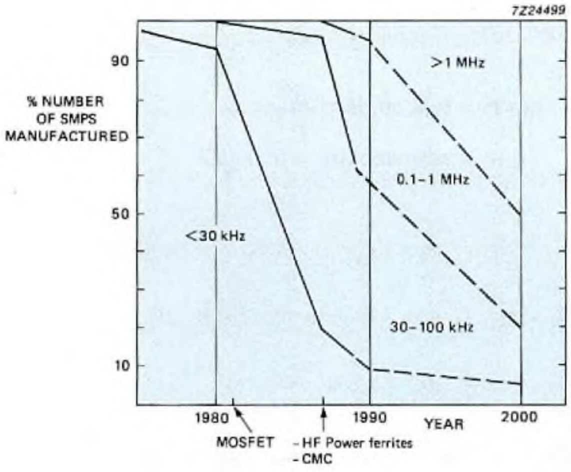

Fig.1 Operating frequency of SMPS

This has now changed. With our new high-frequency, low-loss 3F3 ferrite, we have reached new levels of transformer miniaturization. And because of the higher frequency, the output choke and capacitor can be made smaller – up to 90% smaller – resulting in excellent smoothing of ripple current. Figures 2 and 3 display the significant reduction in size and weight of transformers and chokes when using 3F3 ferrite.

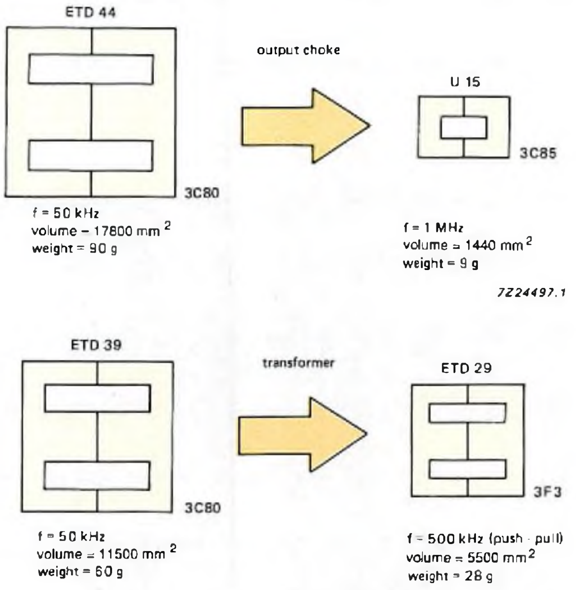

Fig.2 Size and weight reductions possible when using 3F3 ferrite

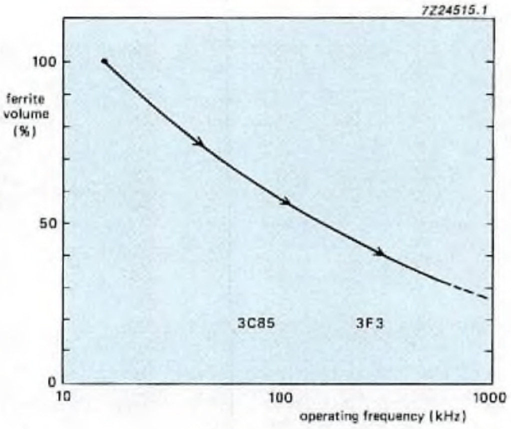

Fig.3 Ferrite volume is considerably reduced at higher frequencies

The power/frequency relationship for 3F3 and two older materials – 3C80 and its derivative 3C85 are compared in Fig.4. Up to a relatively low frequency (about 100 kHz), power throughput is restricted principally by core saturation. However, at higher frequencies, increased losses limit the power by overheating the core. So to maintain the desired power throughput at high frequencies, core losses must be reduced.

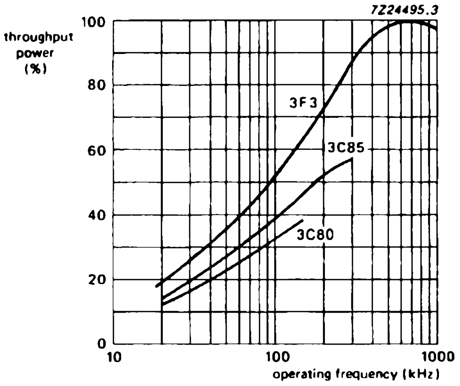

Fig. 4 Throughout power versus operating frequency for 3F3, 3C85 and 3C80

Cutting the losses:

The main losses in a transformer core are:

- hysteresis losses
- eddy current losses
- residual/resonant losses

Hysteresis losses occur because the induced flux B lags the driving field H. The B/H graph is a closed loop and hysteresis loss per cycle is proportional to the area of the loop. The losses are expressed as:

$$P_{hyst} = C_a \times f^x \times B_{pk}^y$$

where Ca = constant

B_{pk} = peak flux density

f = frequency

x and y are experimentally derived

Eddy current losses are caused by energy from the magnetic flux B setting up small currents in the ferrite. These dissipate as heat. The energy lost is represented by:

$$P_{ec} = \frac{C_b \times f^2 \times B_{pk}^2 \times A_e}{\sigma}$$

where C_b = constant

A_e = effective cross-sectional area of core

σ = resistivity

Residual/Resonant losses are due to the reversal of orientation of magnetic domains in the material at high frequencies. When the driving frequency is in resonance with the natural frequency at which the magnetic domains flip, there is a large peak in power absorption.

$$P_{res} = C_c \times f \times B_{pk}^2 \times \frac{\tan\delta}{\delta}$$

where

$\tan\delta$ = loss angle = $\frac{\mu''}{\mu'}$

μ = permeability = $\mu' + j\mu''$

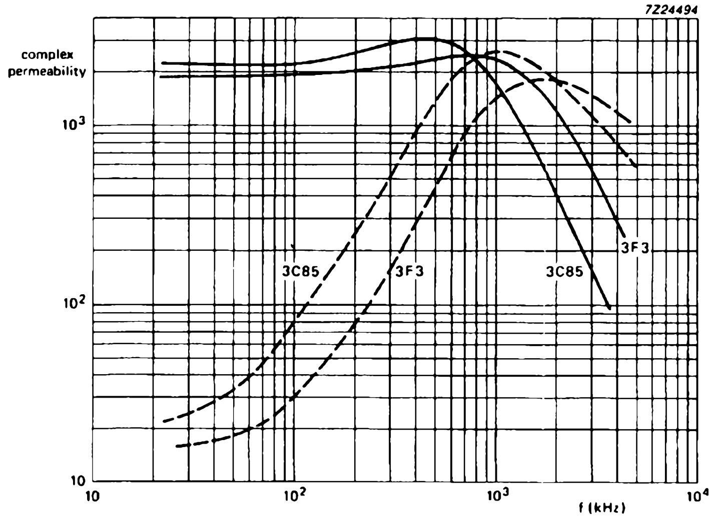

Fig.5 Permeability versus operating frequency for 3C85 and 3F3 (—— μ′, ----- μ″)

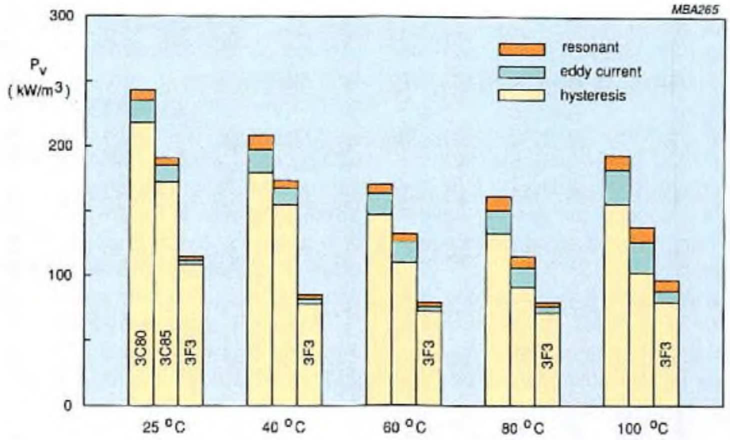

Fig.6 Losses in 3C85, 3C80 and 3F3 at various temperatures at 100 kHz and 100 mT

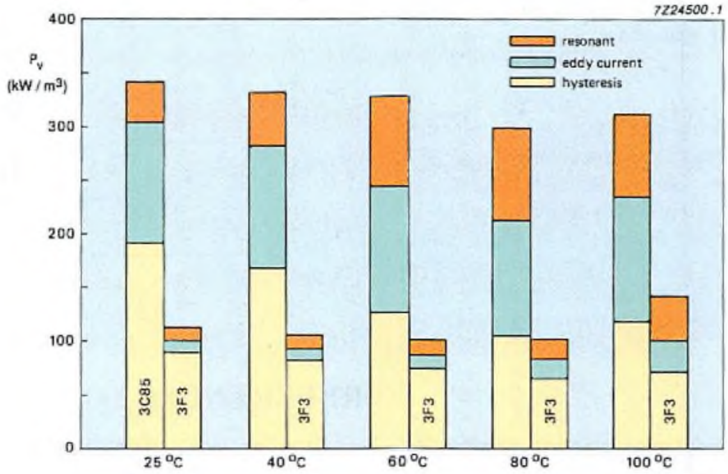

Fig.7 Losses in 3F3 and 3C85 at various temperatures at 400 kHz and 50 mT

3F3 VERSUS THE REST

Figure 6 shows that at 100 kHz and 100 mT, which is the typical operating conditions of 3C80 and its derivative 3C85, 3F3 offers a large reduction in all losses across the entire temperature range.

At higher operating frequencies, 400 kHz for example, eddy currents and resonant losses predominate. You can see from Fig.7, with an operating inductance of 50 mT, 3F3 offers large reductions in all losses (about 60% compared with 3C85), particularly in eddy current and resonant losses.

Figure 8 shows that for a core loss of 200 mW/cm^3, the operating frequency of 3F3 is always higher than for the other materials discussed - at any induction. For example at 100 mT, 3F3 can operate at 250 kHz, as opposed to 100 kHz for 3C80 and 170 kHz for 3C85.

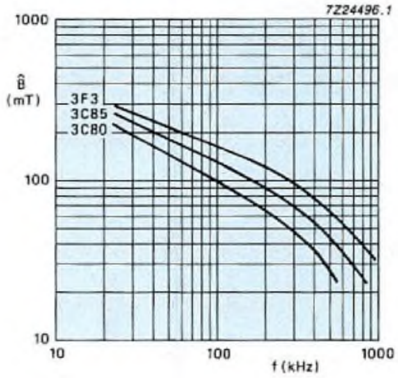

Fig.8 Induction versus operating frequency for 3F3, 3C85 and 3C80 at constant 200 mW/cm2 core loss

The composition of 3F3

The 3F3 ferrite was developed to reduce losses at high operating frequencies and temperatures, to allow reduced core size and increased power density.

Like most power ferrites, 3F3 is MnZn based. However, to reduce losses at high frequencies a higher bulk resistance is needed (see Ref.3). This is achieved by adding TiO_2 to the formulation. By varying the TiO_2 content and paying special attention to the sintering curve, the required reduction in power loss at high frequencies is achieved.

The minimum in the temperature/loss graph coincides with the secondary maximum of the µ-T curve. Therefore, if the temperature at which the µ-T maximum occurs could be raised, it would also raise the temperature for minimum power loss. Substituting Sn, Ti and Co ions into the crystal lattice influences the µ-T maximum. Adding a particular combination of ions to the structure, considerably reduces the power loss and temperature dependence.

As the power loss minimum coincides with the minimum in crystal anisotropy, a regular structure with few inhomogeneities, such as impurities and pores, is important in reducing power loss. The production process is crucial and every care is taken to refine it. We use only the purest materials.

The resonant converter

The resonant converter is the ideal circuit to take full advantage of the high frequency/low power loss characteristics of 3F3. Resonant converters not only reduce switching losses and increase allowable operating frequency, they also reduce EMI.

Standard flyback, forward, and push-pull converters, switch with the currents still high. This leads to high switching losses from resistance in the switch. Replacing the switches in these circuits with resonant versions, consisting of a normal switch and basic LC circuit, overcomes this problem by switching at zero or very low currents. Capacitors and inductors can be combined to form several types of resonant switches which utilize the sinusoidal waveform characteristics of LC circuits.

On closing the switch in Fig.9(a), the current rises sinusoidally as C charges. When C is fully charged, the current is zero and dI/dt is very small. Switching at this point reduces switching losses. In Fig.9(b), C charges from the energy stored in L when the switch is open. When the switch closes, C discharges sinusoidally to L. At full discharge, I and dI/dt are zero and switching at this point again cuts losses.

Resonant switches require gate turn-off (GTO) thyristors. They can be switched at zero current and low dI/dt, can handle large peak currents, and have simple drive requirements.

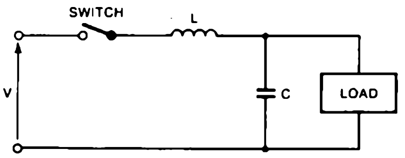

(a) SERIES

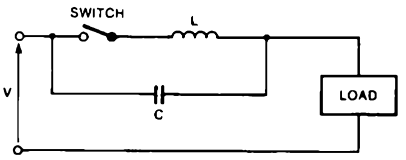

(b) PARALLEL

7Z81592

Fig.9 Basic resonant switch circuits

CONCLUSION

3F3 offers a major improvement over existing ferrites for SMPS transformers. Manufactured using the latest techniques, we can set and attain the highest specifications. With reduced losses across the entire frequency range (but most markedly at 400 kHz and higher) 3F3 enables significant reductions in core volume while still maintaining the desired power throughput.

3F3 ferrite is available in the following shapes:

- RM core
- P core
- EP core
- ETD core
- EF core
- E core
- ring core

REFERENCES

1. Snelling, E.C. 1988. 'Soft ferrites', 2nd edition, Butterworth & Co. (Publishers) Ltd.
2. Buethker, C., Roelofsma, J.J., and Stijntjes, T.G.W. September 1982. 'Low-loss power material with improved temperature behaviour'. Fall meeting American Ceramic Society paper 58-BE-82F.
3. Stijntjes, T.G.W. and Roelofsma, J.J. 1984. 'Low-loss power ferrite for frequencies up to 500 kHz'. ICF4, San Francisco, 1984.
4. Snelling, E.C. and Giles, A.D. 1983. 'Ferrites for inductors and transformers'. Research Studies Press.
5. Buethker, C. and Harper, D.J. 1986. 'Improved ferrite materials for high frequency power supplies'. HFPC, Virginia Beach.
6. 'High frequency ferrite power transformer and choke design', Technical Publications 205 to 208, Philips Components. Ordering codes 9398 053 20011, 9398 053 30011, 9398 053 40011 and 9398 053 50011 respectively.
7. 'Resonant converters', Technical Publication 262, Philips Components. Ordering code 9398 059 60011.

EFD – for low-profile DC-DC converters

WIM WAANDERS

Economic Flat Design (EFD) power transformer cores offer a significant advance in circuit miniaturization. Their low build height and high throughput power-density make them ideally suited to applications where space is at a premium.

One such application is with distributed power-systems which are becoming an increasingly popular method of power conversion, especially in the telecommunication and EDP markets. Such power-systems convert a mains voltage into an unregulated voltage of about 44 V to 80 V DC. This is then fed to individual sub-units, where DC-DC converters produce the required stabilized voltages. These converters are usually mounted on PCBs which, in modern systems, are stacked close together to save space. The DC-DC converter, therefore, has to be designed with a very low build height.

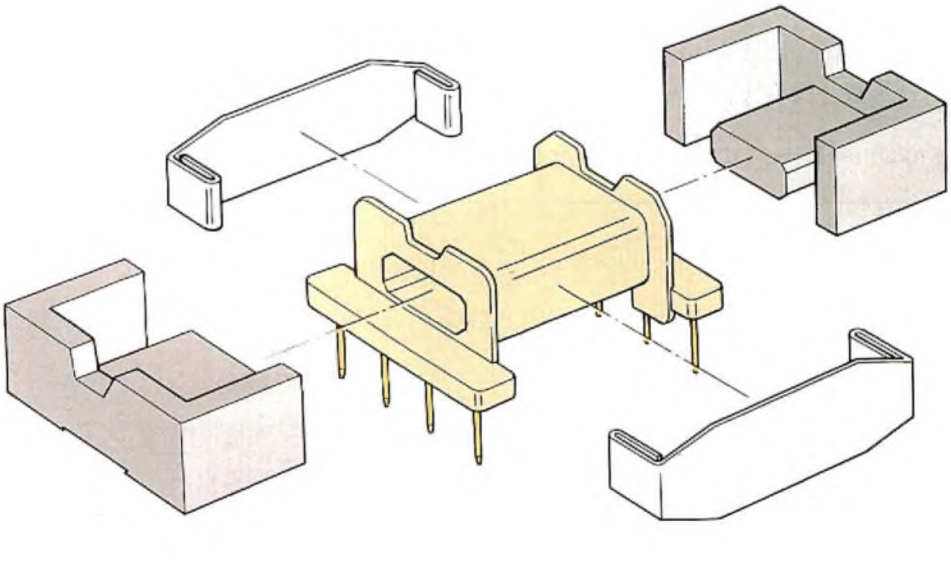

Fig.1 With the EFD core assembly you get a completely integrated range of accessories

THE LOW-PROFILE DESIGN

Throughput power of a ferrite core transformer is essentially proportional to its volume. So the transformer is one of the main limitations in a DC-DC converter's size.

Now, with the introduction of the EFD system, a significant reduction in transformer core height has been achieved. EFD transformer cores combine both extreme flatness with a very high throughput power-density. It's a completely integrated system from which we can offer four core assemblies along with a complete range of accessories. In fact it's planned that EFD will soon become a new European standard in DC-DC power transformer design.

The EFD range consist of assemblies for building transformers with a maximum finished height of 8 mm, 10 mm, or 12.5 mm. They are:

8 mm height	EFD 15/8/5
10 mm height	EFD 20/10/7
12.5 mm height	EFD 25/13/9 EFD 30/15/9

You can see from Fig.2 that every transformer, based on the EFD range, has a lower building height than any other existing low-profile design with the same magnetic volume.

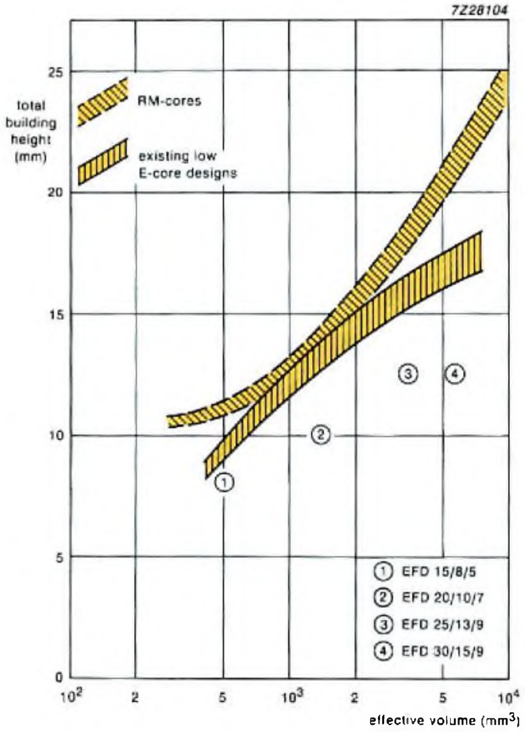

Fig.2 The build height of the new EFD range is considerable less than that of existing designs

INTEGRATED PRODUCT DESIGN

To manufacture a transformer with such a low build height, its components such as the ferrite core, coil former, clips and other accessories, must form a completely integrated assembly. To achieve this, the range was designed by a team of specialist engineers from several disciplines.

There is no room on closely stacked PCBs for heavily built coil formers, so they must be as small and light as possible. However, they must also be strong and resistant to the severe heat of soldering. For that reason, we use only the highest quality thermosetting plastics in their manufacture. This ensures that the connecting pins on the base of the coil former stay in line and remain positioned correctly.

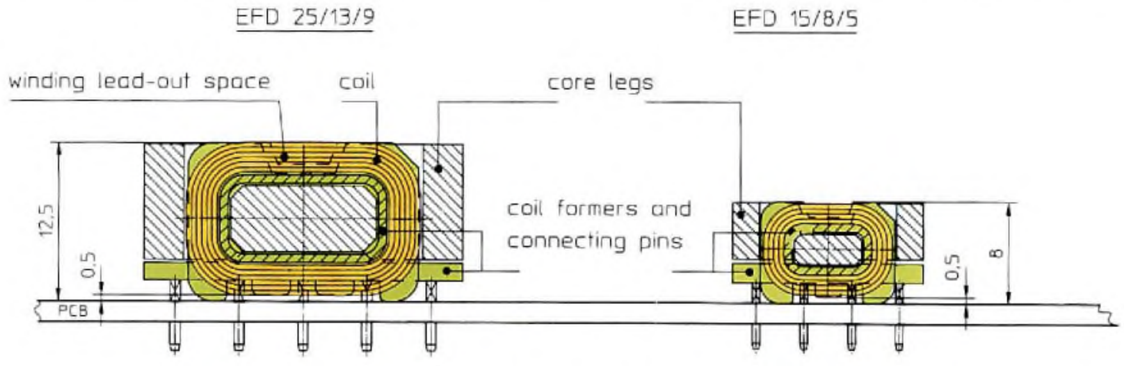

Fig.3 Cross-section of EFD based transformers

To make the EFD coil formers suitable for winding equipment we've designed the connecting pins with a square base, saving time in wire terminating. And to allow thick wire or copper foil to be led out, both core and coil former have a cut-out at the top (Fig.1).

To increase efficiency and reduce size, we designed the ferrite core with its centre pole symmetrically positioned within the wound coil former (Fig.3). Because of this, the full winding area is used, resulting in an extremely flat design which is ideally suited for surface mounting. In fact, SMT designs are now under consideration.

The retaining clips have also been carefully designed. They are easily fitted, and don't slip off accidentally.

MAXIMIZING THROUGHPUT POWER-DENSITY

Besides their extreme flatness, the most important feature of the EFD transformer is their very high throughput power-density. This is especially true when the core is manufactured from our new high-frequency, low-loss 3F3 power ferrite. With this ferrite, throughput power-densities, related to transformer volume, range between 10 and 20 W/cm^3. And with a frequency range from 100 kHz to 1 MHz, the EFD transformers cover most applications.

Transformer design is mainly limited by two factors: saturation of the ferrite core at lower frequencies, and temperature limitations, caused by heat dissipation from the ferrite and windings, at higher frequencies (above 100 kHz). So the extent to which a transformer can be miniaturized at high frequencies is limited by the rise in its temperature. As a general rule, maximum efficiency is reached when about 40% of the losses occur in the ferrite core, and 60% in the windings.

To design the optimal core dimensions and winding area, we used a sophisticated computer aided design (CAD) model of a DC-DC forward mode transformer. This program predicted the temperature rise of the transformer as a function of its throughput power.

We assumed the following parameters when running the CAD program:

ferrite core:	3F3
V_{in}:	44 to 80 V, DC
V_{out}:	5 V, +12 and −12 V
T_{amb}:	60 °C
T_{rise}:	40 °C
primary:	Cu wire
secondary (5 V):	Cu foil

(split sandwiched winding with 2 screens).

We used the CAD program to find an optimized design for the EFD transformers at well chosen frequency bands. The dotted line in Fig.5 indicates the theoretical optimal result derived from the CAD model. It shows how well our EFD range approximates the ideal model.

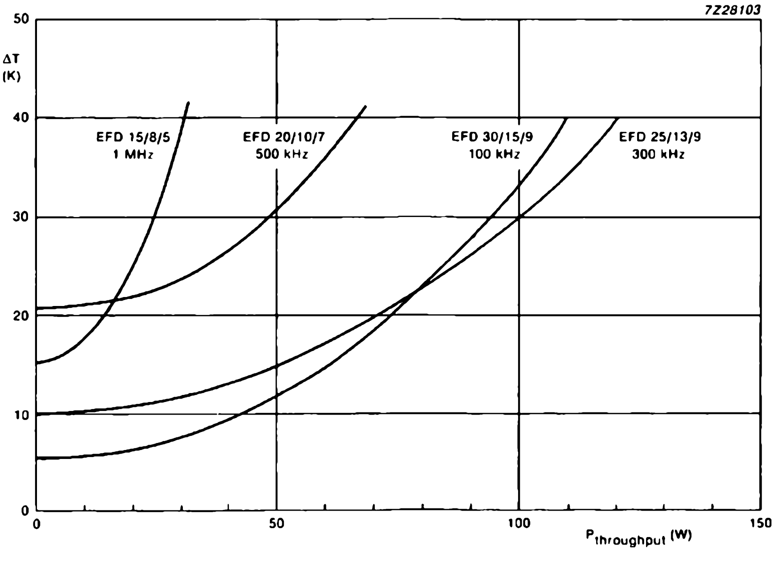

Fig.4 Temperature rise versus throughput power for transformers based on the EFD range with 3F3 cores

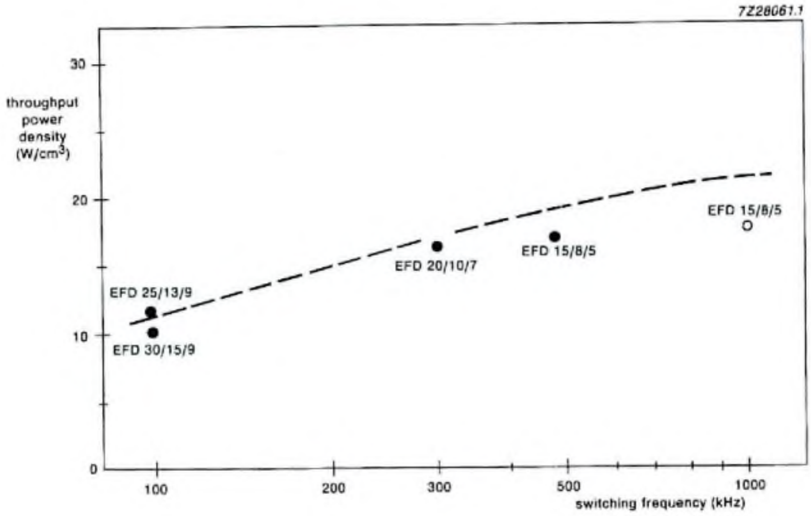

Fig.5 Throughput power densities, in forward mode, for transformers based on the EFD range with 3F3 core (the 'open' circle shows the maximum optimal frequency of EFD 15/8/5)

From those results we grouped the range, depending on core type, into their most optimal frequency bands.

- 100 - 300 kHz EFD 30/15/9
  EFD 25/13/9
- 300 - 500 kHz EFD 20/10/7
- 500 kHz - 1 MHz EFD 15/8/5

These are the recommended frequency ranges for each EFD type. The transformers can operate outside those ranges, but at reduced efficiency as the ratio of their core to winding areas would be less than ideal. Table 1 shows the power throughput at certain frequencies for each EFD core.

TABLE 1
Power handling capacity for EFD range

core type	100 kHz	300 kHz	500 kHz	1000 kHz
EFD 30/15/9	90-110 W	110-140 W	–	–
EFD 25/13/9	70-85 W	90-120 W	–	–
EFD 20/10/7	–	50-65 W	55-70 W	–
EFD 15/8/5	–	–	20-30 W	25-35 W

Valid for a single-ended forward DC-DC converter (V_{in} = 60 V; V_{out} = 5 V)

The typical throughput power curves in Fig.6 show the performance of the range for 3F3 ferrite and its predecessor 3C85. These results were recently confirmed from measurements taken during tests on EFD cores in a transformer testing set-up. The results show that, especially in the frequency ranges above 300 kHz, the use of 3F3 ferrite (compared to 3C85) significantly improves throughput power.

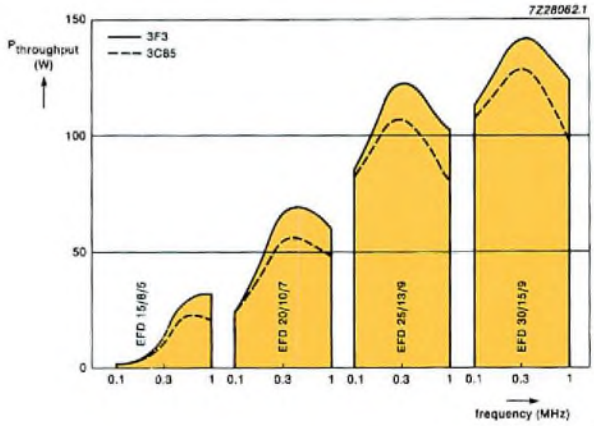

Fig.6 The performance of the EFD range compared for our two high-grade power ferrites

Controller Area Network (CAN) components

HORST EY

With complex mechanical systems, the ultimate in safety and efficiency can only be ensured by electronic control of all subsystems. Thus, increasing safety and efficiency in motor vehicles has inevitably led to a rapid growth in automotive electronics. Electronics to control fuel-injection, gas-emission, anti-lock braking systems, power steering... the list is endless.

To ensure the optimum overall performance of the electronically controlled systems in a vehicle, a well-defined communication protocol is essential. The serial communication system we recommend is the "Controller Area Network" (CAN), for which we offer a host of electronic hardware, software and application support.

CAN – WHAT IS IT?

CAN is a de facto standard protocol specifically designed to meet the requirements of motor vehicles. It provides communication between "electronic modules" (see Fig.1), connected to a two-wire bidirectional serial bus, to control each subsystem within the vehicle. CAN provides flexibility in that special-feature modules can be added to a fixed set of basic modules without reconfiguration of any of the basic modules.

Designed to operate in very noisy environments, a unique property of the CAN protocol is its automatic error-handling capability: extensive simulations revealed that less than one non-detected communication malfunction would occur in several thousand cars during their lifetime.

WHY PHILIPS HAS CHOSEN CAN

We believe CAN is the best and most reliable protocol for vehicles because it was tailored for the automotive market and its error detection mechanisms are superior to anything else available on the market. Proposed as an ISO standard for communication of at least 125 kbits/s, it is the only automotive protocol which is not from a single company and is accepted by car makers and component suppliers alike. Furthermore, although the physical behaviour of the network is fixed to ensure compatibility of all CAN products, the interface to the microcontroller is completely open. This will enable us to tailor future devices to your needs.

THE PHILIPS SOLUTION

We offer a system approach to CAN providing all the necessary components, software and support you require for your application. For an in-vehicle network built up with our products you will need:

- electronic modules, each comprising:
  - a physical bus interface
  - a bus controller
  - a module controller
  - an application interface
  - a power supply
- software for the module controller
- a twisted pair cable, normally without shielding (for communication below 100 kbits/s).

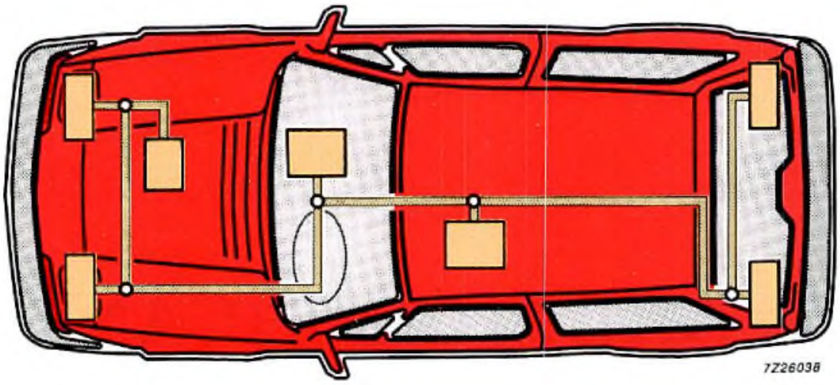

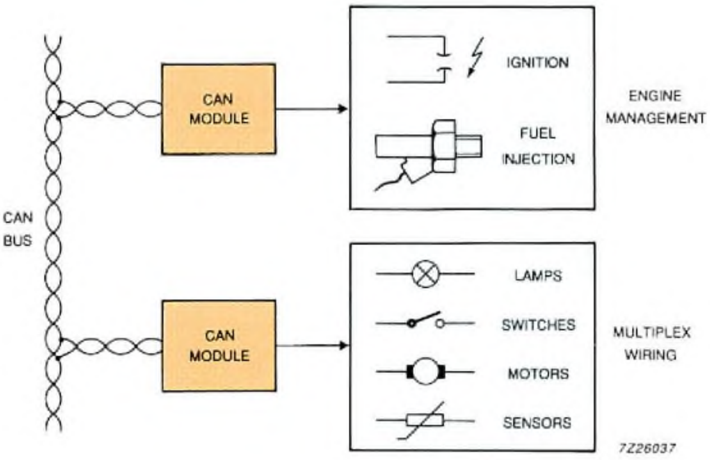

Fig.1 Applications of typical CAN modules (Although shown interconnected, two CAN buses of different speeds may be implemented)

CONSTRUCTION OF A TYPICAL CAN MODULE

(A) The physical bus interface

This transforms the voltage on the bus lines into logic levels. Since our CAN controller already incorporates a receiver with a differential input comparator and transmitter output stages, the discrete external circuitry is easy to implement. We are currently working on an IC specifically tailored to this application.

(B) The bus controller

The bus controller writes and reads data to and from the bus via the physical bus interface, as well as interfacing with the module's microcontroller. The PCA82C200 IC is our implementation of the widespread CAN (Controller Area Network) communication controller. Its main features are:

- multimaster architecture
- bus access priority by message identifier
- guaranteed latency time for a distinct message
- powerful error handling and recovering
- transfer rate up to 1 Mbit/s
- uniquely able to handle all 2032 possible identifiers simultaneously
- fully compatible with all CAN products
- interfaces to numerous microcontroller/processors.

(C) The microcontroller

The Philips PCA83C552 is a high performance 8-bit microcontroller with an enhanced 80C51-type core. It controls the on-board circuits for the particular module as well as application specific tasks. The PCA83C552 comprises:

- PCA80C51 central processing unit
- 8K × 8 ROM, externally expandable to 64K
- 256 × 8 RAM, externally expandable to 64K
- two standard 16-bit timer/counters
- additional 16-bit timer/counter coupled to four capture registers and three compare registers
- 10-bit ADC with 8 analog multiplexed inputs
- two 8-bit pulse-width modulated outputs
- five 8-bit I/O ports plus one 8-bit input port shared with ADC inputs
- I^2C serial bus interface
- full-duplex UART
- on-chip watchdog timer.

(D) The on-board power supply

The UAA1300 voltage regulator/watchdog timer is a new Philips development.

Especially designed for use in the automotive environment, this circuit's features include:

- high and low current 5 V power supplies
- "low line" input-voltage monitoring and alarm
- reset and watchdog output
- low quiescent current.

(E) The power switches

Philips' IPSs (Intelligent Power Switches) are directly controlled by the output pins of the controller. They are designed for driving lamps, motors, solenoids and heaters. For example, the BUK196-50 features:

- a 5 V logic input
- a supply voltage range of 5 to 50 V
- a max DC current of 11 A at an on-state voltage drop of 0.5 V (T_{amb} = 85 °C)
- a peak inrush current of 50 A
- an exceptionally low "on resistance" (R_{DSon}) of 33 mΩ.

The IPS is fully protected against short-circuits and voltage, current and temperature overload. It also reports its status back to the controller via an output pin.

DEVELOPMENT AND APPLICATION SUPPORT

Philips offers powerful support during the design and test phases of CAN vehicle networks. We work closely with our customers to develop their systems, sometimes extending to technological partnerships with our automotive centre of competence in Hamburg. Our most versatile tool is the "Philips Stand-alone CAN Controller (PSCC) Evaluation Board" (see Fig.2) – a ready-to-use hardware and software module very similar to a real CAN module.

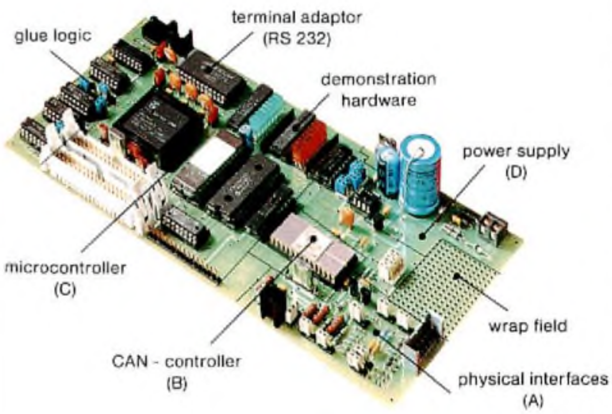

Fig.2 The PSCC evaluation board

Since a 5 V power supply is provided, the board can be used in any vehicle without modification. An RS232 interface allows a terminal or a PC with terminal- emulation software to be connected to the board. The board comprises:

- a PCA82C200 CAN bus-controller
- a PCA80C552 microcontroller with up to 32K external RAM and EPROM
- a 5 V power supply with protection against car battery disturbances
- two different physical CAN bus interfaces (selectable)
- an RS232 interface
- demonstration hardware
- a wrap field for customer-specific circuitry.

The software provided with the board supports you in learning about CAN and assists you to prototype in-vehicle networks. It provides:

- demonstration software – a menu-driven software monitor allows the PCA82C200 registers to be altered without the risk of real hardware damage

- a download facility – the software monitor allows loading of your own software onto the board. Debugging is aided with a bus monitor, which receives messages from the bus and displays them on a terminal.
- a basis for prototype modules – using entirely your own software, the board can be used as a custom, debugged and proven hardware module.

Advanced support

In addition to the PSCC board, three sophisticated tools are also available to assist in designing in-vehicle networks. These tools comprise:

NetSim

The network simulator is a software tool for a PC. To run it, a CAN network must be described in terms of:

- number of network nodes
- transmission speed
- message identifiers/length
- noise.

The simulation provides information about various network parameters, such as delay of a distinct message or bus load. NetSim helps to fix these parameters when designing a network.

NetAna

The network analyzer is a combined hardware/software tool based on a PC. It either:

- monitors the bus traffic and stores the message stream on the PC's hard disk for analyzing later or
- records bus traffic before and after a trigger event given by the user (identifier, bus error etc.).

This tool helps to trace error conditions in an existing CAN network.

NetEmu-stimulator

The emulator-stimulator box is connected to an existing CAN network, either as an additional node or as a substitute for missing user-designed hardware. It enables the user to inject distinct messages into the network. The resulting behaviour of the network may be analyzed with NetAna.

Note

Purchase of Philips' I^{2}C components conveys a license under the Philips I^{2}C patent to use the components in the I^{2}C system provided the system conforms to the I^{2}C specifications defined by Philips.

SCC66470 Video and System Controller...

... replaces up to 30 ICs in display systems

JEAN-CLAUDE SIX

As the first fully-integrated SCC680XX/90CXXX-bus compatible Video and System Controller (VSC) for fully bit-mapped video display oriented systems with a resolution of up to 768 by 560 pixels, the SCC66470 heralds a new era by allowing low-cost implementation of user-friendly man/machine interfaces.

By using advanced CMOS technology to integrate all the glue logic for a high-performance colour display interface, the VSC replaces about 30 ICs, thereby reducing the number of components required by 75%. This reduces the cost of constructing icon/graphics-based interfaces to a level that allows them to be incorporated in smaller systems such as PCs, intelligent colour monitors, videotex terminals, compact disc interactive (CD-I) systems, industrial man/machine interfaces and process control systems.

MAIN FUNCTIONS OF THE VSC

The VSC (Fig.1) performs three types of function:

- all the video control functions necessary to read bit-mapped data into RAM, serialization of pixels, and generation of video sync signals for 50/100 Hz interlaced/non-interlaced scan
- SCC680XX/90CXXX system control, dynamic RAM control, coprocessor interface control
- dedicated functions which speed up the manipulation of the bit map and therefore the speed with which an image can be refreshed or manipulated.

The Microcore board – a low-cost minimum application of the VSC

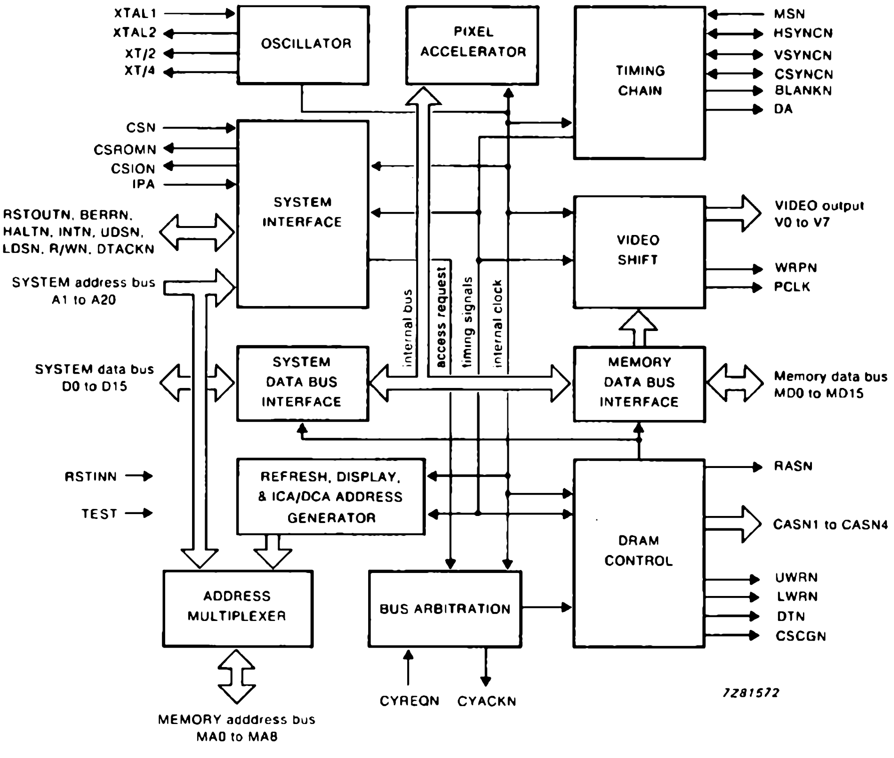

Fig.1 The SCC66470 Video and System Controller (VSC)

Video control allows several pre-defined display modes to be programmed

The display timing is compatible with European, Japanese and US standards for TV and Videotex applications. The video memory can contain 4 or 8 bits per pixel corresponding to a 16- or 256-colour display. Resolution is programmable up to 768 × 560 pixels for a 16-colour display, or up to 384 x 280 pixels for a 256-colour display. A real-time file decoder permits run-length and mosaic compressed code files to be displayed.

The video section of the memory can be organized in one of two ways; a *physical* screen mode where each pixel is mapped directly to a line of the same length in memory, and a *logical* mode in which a 512-bytes wide image in memory is mapped to a partial screen window of the total image. The *physical* screen mode optimizes memory usage; the *logical* mode allows fast horizontal scrolling.

The VSC allows very flexible screen control. Using the VSC's dynamic control feature, for example, it's possible to implement sub-screens of any height from one text line to a full-screen, or to change the colour of the screen/border (up to 256 colours) line-by-line. This control is performed by instructions stored in two areas of memory; the Image Control Area (ICA) and the Dynamic Control Area (DCA). Also included in both the ICA and DCA are instructions which can reload the video start address, generate a microcontroller interrupt, and change the border colour.

The video start address can be changed to add special effects, including smooth horizontal/vertical scrolling. It's also possible to use the video start instruction to create a number of horizontal or vertical (split) sub-screens.

The VSC also has a real-time frame grabbing function that can be used to collect video data from an external source. Using a few simple interface circuits and analog-to-digital converters, an image can be written into memory during a single frame. Grabbing allows the VSC to be used with a camera in applications such as desk-top publishing, machine vision and remote surveillance.

FEATURES OF THE VSC

Video control:

- Full bit-map organization
- Up to 768 x 560 pixel screen resolution
- 4 or 8 bits/pixel (16 or 256 colours)
- Up to 15 MHz pixel rate
- Supports run length coded file displays
- Mosaic effect
- Synchronous 50 or 60 Hz scan frequency
- Double frequency scan
- Interlaced and non-interlaced modes
- Synchronization with external video signal
- Split screens

System control:

- Direct interface for 680XX/90CXXX bus compatible devices
- Full DRAM control (up to 1.5 Mbyte direct driver)
- 1 Mbit device support
- Expansion up to 2 Mbyte system/video memory
- Reset sequencing includes ROM shadowing
- 0.5 Mbyte ROM control
- 1 kbyte I/O control
- Watchdog timer

Pixel accelerator (PIXAC):

- Fast 16-bit pixel Test-and-Modify logic
- Fast character colouring

General:

- CMOS technology
- 120-lead quad flat-pack (QFP) plastic package (SOT220)

VSC APPLICATIONS

- Home/personal computers
- Intelligent colour terminals
- Bit-mapped graphics, text, I/O systems
- General-purpose man/machine interfaces
- Compact Disc Interactive (CD-I) video controller
- Frame grabbing
- Remote control

SCC680XX/90CXXX family system control

The SCC66470 integrates all the necessary functions for a minimal system. It performs several system control functions of the SCC680XX/90CXXX family such as:

- power-on reset
- memory swapping after reset
- address decoding configurable in accordance with the capacity of DRAM chips used
- data acknowledge generation with timing dependent on the addressed device/area (DRAM, system ROM, system I/O, DRAM I/O, internal registers)
- chip select function for I/Os and memories
- bus error generation by watchdog timer
- interrupt request generation.

The SCC66470 incorporates an on-chip DRAM controller which is programmable for normal, page, nibble or dual-port video DRAM (VDRAM) memory chips. It can directly drive up to 16 DRAM ICs forming a memory that can be arranged either as a single bank of sixteen 64K × 1 or 256K × 1 DRAMs, or a several banks of four 64K × 4 or 256K × 4 DRAMs. This memory forms a combined video/systems memory with a capacity of up to 1.5 Mbytes. The SCC66470 allows the DRAM to be used simultaneously as both a video and system memory. This means that a CPU or coprocessor can access any location of the total memory area, even during active video display periods, thereby increasing system throughput.

Fast image manipulation

One of the most attractive features of the VSC is its ability to manipulate pixels independently of the central processor and so speed up the hardware system. The VSC's on-chip hardware pixel accelerator (PIXAC) performs operations in a single instruction cycle that would take several cycles using the CPU's 68000 instruction set. The PIXAC can manipulate the pixel contents in memory up to eight times as fast as the SCC680XX/90CXXX. The PIXAC performs five functions:

- copying source pixels to destination pixels
- exchanging source and destination pixels
- transferring source pixels to destinations with an associated colour change to current foreground/background colour
- changing pixels to the current foreground or background colour according to the bit map
- testing of pixel colour.

PIXAC can enlarge/reduce images by a factor of two, and can also make bit-to-pixel and pixel-to-bit translations (useful for placement of screen characters).

VSC APPLICATIONS

Our SCC680XX/90CXXX 32-bit microcontrollers and SCC66470 VSC, when used together, allow a 16/32-bit processing and high-resolution colour display system with a pixel rate of up to 15 MHz to be built with as few as nine ICs.

The Microcore board – a low-cost minimum application of the VSC

An economic colour graphics display board (Fig.2) using the SCC66470 VSC and the SCC68070 microcontroller requires only seven additional ICs and occupies an area of 10 cm by 10 cm on a double-sided Eurocard.

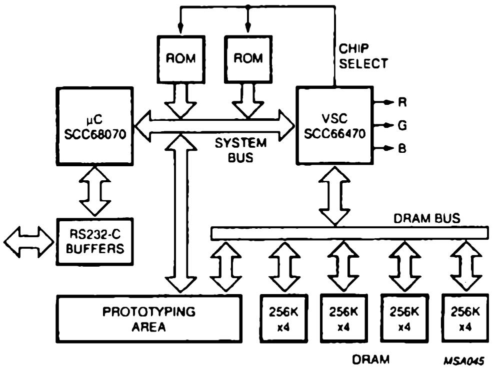

Fig.2 Microcore board

We can provide a complete board (the Microcore evaluation board, see photo) which comes with the VSC, a 10 MHz SCC68070 microcontroller, an RS232 serial interface, a CRT interface, an I^{2}C-bus interface, and a small monitor program in two EPROMs. The memory comprises 512 kbytes of DRAM (four ICs) for image and system management, and 128 kbytes of ROM (two ICs) for system memory character font memory and test image storage. The ROM can be expanded to 512 kbytes. The ninth IC is the RS232 level translator and its power supply. The remainder of the space on the board can be used as prototyping area. Connecting a standard video console to the RS232 port is all that's necessary to get the system operating. The board can also be connected to a host computer via the RS232 port, and to a keyboard/mouse controller via the I^{2}C-bus interface. Two 9-pin D-type connectors and a flat cable for connecting the board to the RS232 and CRT interfaces can be provided.

The microcore board has the following features:

- SCC68070/90CXXX-compatible CPU
- the SCC66470 (VSC)
- 4 × 1 Mbit DRAM
- monitor program in ROM
- RS232 port
- CRT connector
- I^{2}C-bus interface.

Low-cost video and data processing for CD-I

As shown in Fig.3 the SCC66470 VSC and SCC68070 microcontroller are ideal for implementing a low-cost video and data processor at the minimum possible level (base-case) that meets the requirements of the CD-I (Compact Disc Interactive) standard.

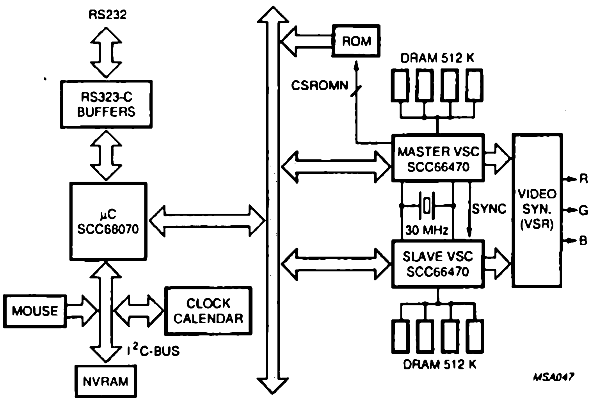

Fig.3 Two VSCs in the video and data processing section of a Compact Disc Interactive (CD-I) system

The picture is composed in two image planes (e.g. background and foreground) which can be overlaid or mixed to achieve visual effects like cuts, fade-in, fade-out and mixing. As shown in the block diagram, two images (one per image plane) are stored in the two 0.5 Mbyte memories of two VSCs before being sequentially transmitted to a decoding and mixing IC (video synthesizer VSR66460). The VSCs offer screen resolutions from 320 × 210 pixels to 756 × 560 pixels. The Slave TV synchronization mode allows the VSCs to be synchronized with each other, and, if required, also synchronized with the incoming 50 Hz/60 Hz video images.

The 4-bit/pixel mode gives the high resolution necessary for displaying a large number of characters per line. The 8-bit/pixel mode can be used to feed the decoding channels of the video synthesizer (VSR) which has two decoding modes; the Direct mode for computer graphics applications, and the Delta YUV mode for photographic quality pictures. The VSR also integrates a palette which can give up to 256 K colours.

The VSCs are also used to transfer control information from memory to either the VSR registers or the control and parameter registers of the VSCs by using the ICA and DCA mechanisms. The ICA mechanism is active during the vertical retrace periods. It allows for updates like reloading new palette values or display modes for the next frame or field. The DCA mechanism is active during the horizontal retrace periods. It allows up to eight control commands relating to the next video line to be analyzed and executed.

For handling compressed images by using the run-length mechanism, the VSCs can also read a list of runs in memory and use this information to generate the pixel flows for the VSR. This gives a very high compression factor for simple video images (e.g. cartoon images).

The memory contents can be manipulated by using the SCC68070 microcontroller either directly, or with help of the pixel accelerator (PIXAC) which is a colour BITBLT function optimized for treatment at pixel level in 8-bit or 4-bit mode.

Frame grabbing

Frame grabbing is the procedure of digitizing a picture from a video source and storing it in the system/video memory of the VSC. This feature of the VSC can be used in applications such as:

- desk-top publishing
- remote surveillance
- machine vision
- digitizing TV pictures from a VCR or video disk.

As shown in Fig.4, the following main functions are required around the SCC66470:

- an analog video source (e.g. a video camera) to deliver a composite video signal
- an A to D conversion section to digitize the analog video input
- a system/video memory (e.g. DRAM) to store the digitized image
- a microcontroller (e.g. SCC68070 or SCC90CXXX) to control the SCC66470 VSC.

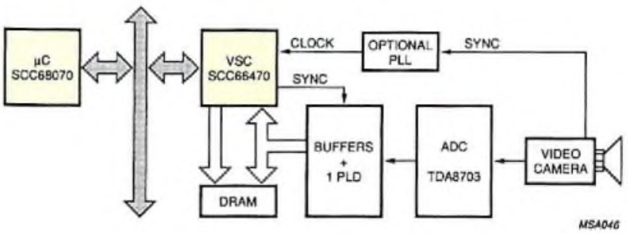

Fig.4 The VSC in a frame grabbing application

The SCC66470 can be synchronized with the video source in Slave TV mode or in Slave DUAL mode. In the Slave TV mode, the VSC receives a vertical sync signal from the video source and generates a horizontal sync signal output. This latter signal is synchronized with the horizontal sync signal in the video source via a PLL which delivers a clock signal to the VSC. In the Slave DUAL mode, the VSC receives both the horizontal and vertical sync signals from the video source.

The VSC grabs the video image frame by frame. The frame grabbing bit in the display command register is set by software to invoke the frame grabbing action at the start of each frame, and reset at the end of each frame.

The A to D conversion section comprises A to D converters (e.g TDA8703) and latches.

Different hardware configurations can be used to allow grabbing of 8 bit/pixel monochrome images as well as colour images. It is also possible to use two VSCs to attain double resolution so that 16 bit/pixel colour images can be grabbed.

SOFTWARE SUPPORT

The SCC680XX/90CXXX plus the SCC66470 can run with various operating systems and applications software. A typical example is the GEM graphics environment application package (Digital Research Inc.). A comprehensive selection of software add-ons is available, including GEMDraw, Desktop and GST First Word. GEMDOS provides character device I/O, file management, disk drive and directory management, program control and timing.

GEM implements a Virtual Device Interface (VDI) standard (an established standardized interface between specific device drivers and application software) which is device-independent in graphics applications. The VDI functions control output (drawing, area fill) and input (mouse, joystick), raster attributes (colour, typeface) and inquiries.

Furthermore GEM offers a ready-to-use Application Environment Service (AES) with a number of high-level user interface graphics such as icons, pull-down menus, dialogue boxes, messages and windows. The development time for software written in C can be short because the software libraries and tools for this type of application are already available.

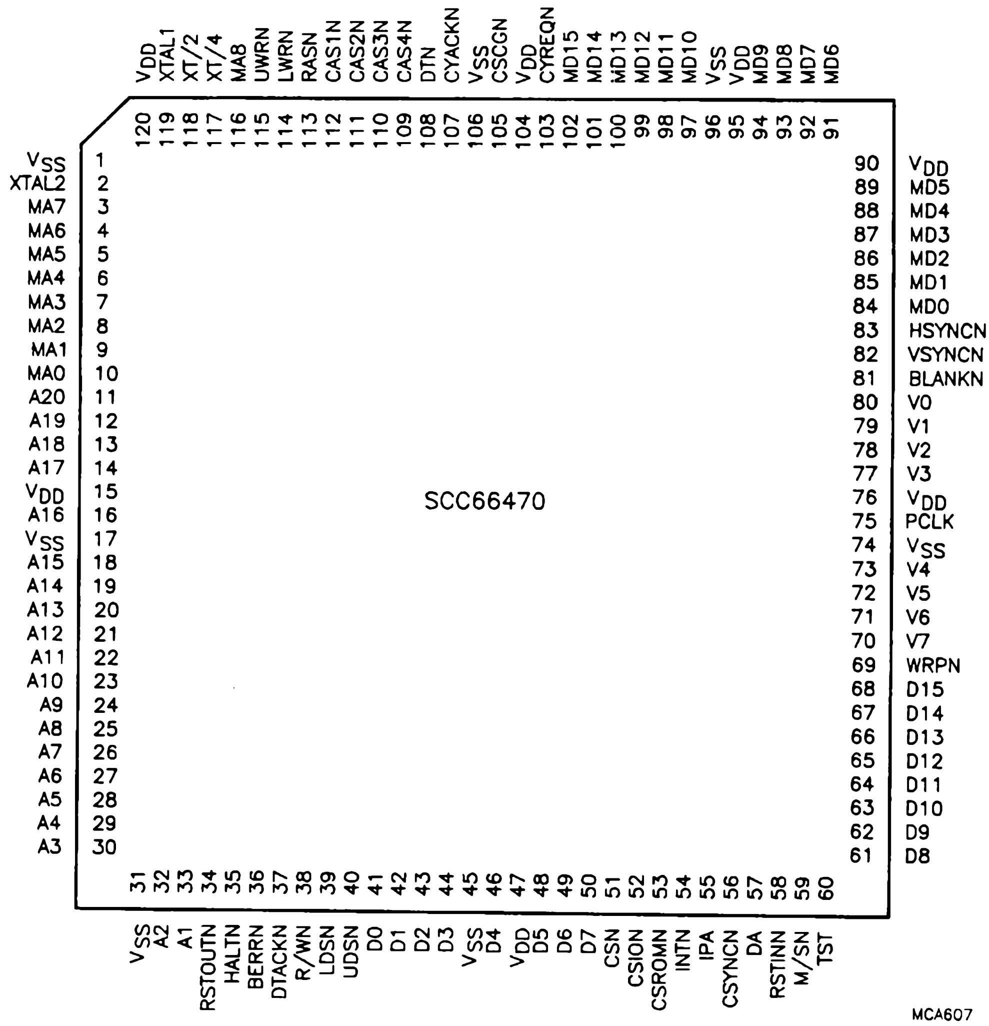

Fig.5 Pinning diagram for the Video and System Controller SCC66470

SIGNAL DESCRIPTIONS (Fig.5)

mnemonic	type	function
		System bus
A1 to A20	I	System address bus. Provides the system address during system bus accesses. The address bus must be stable when UDSN and/or LDSN are asserted
BERRN	O	BUS ERROR (3-state). Asserted by the VSC if UDSN or LDSN are still asserted at the end of the time-out period
CSION	O	Chip Select I/O. Asserted during a system bus access in the external I/O area when UDSN and/or LDSN are asserted
CSN	I	Chip Select. When asserted, data transfer between system bus and VSC-controlled resources is enabled. Validates address decode for system access
CSROMN	O	Chip Select ROM. Asserted during system bus access in the ROM address area when UDSN and/or LDSN are asserted
D0 to D15	I/O	Data bus (3-state) for transferring data between the system bus and the VSC. The VSC drives the data bus during read cycles. The data bus must be stable when UDSN and/or LDSN are asserted
DTACKN	I/O	Data Transfer Acknowledge (open drain). Asserted when the system bus cycle can be continued. Must be pulled-up
HALTN	O	HALT (3-state). Asserted by the VSC reset sequencer during the reset procedure
INTN	O	Interrupt request (open drain). Generates interrupt requests to the CPU
IPA	I	Implicit Pixel accelerator Addressing. Used by the CPU to implicitly address the pixel accelerator to speed-up manipulation
LDSN	I	Lower Data Strobe. Asserted to indicate that data is being addressed on D0 to D7
RSTOUTN	O	Reset Output (3-state) asserted by the VSC Reset Sequencer during the reset procedure
R/WN	I	Read/Write. Indicates system bus transfer direction. When LOW, data is being written into VSC controlled resources or internal registers
UDSN	I	Upper Data Strobe. When asserted, indicates that data is being addressed on D8 to D15
		Dynamic RAM interface
CAS1N to CAS4N	I/O	Column Address Strobes for memory banks 1 to 4. During the RESET period these signals are active HIGH inputs to select/deselect the memory banks. In the 356K mode, CAS4N HIGH indicates a display. ICA/DCA or refresh window. CAS4N in the high-impedance state indicates a CPU or coprocessor window. They are inputs during reset sequence to select/deselect corresponding memory bank
CSCGN	O	Chip Select Character ROM. Only used with the coprocessor interface
DTN	O	Data Transfer. Used to initialize the serial port of dual-port VRAMs
LWRN	O	Lower Write signal asserted when the least-significant DRAM byte is being written
MA0 to MA8	I/O	Memory Address lines (3-state). Multiplexed ROW/COLUMN address line outputs for DRAM control. mA8 is not used with 64K DRAMs. Are the least-significant bits for address input bits (A1 to A9) from a coprocessor when CYACKN is asserted.
MD0 to MD15	I/O	Memory Data bus (bidirectional, 3-state) for transferring data between DRAM bus and VSC. They are stable when UWRN and LWRN are asserted. They also function as address and control inputs during coprocessor cycle
RASN	O	Row Address Strobe. Also used for coprocessor handshaking
UWRN	O	Upper Write signal asserted when the most-significant DRAM byte is being written
		CRT controller interface
BLANKN	O	Blanking output (3-state). Is LOW only during horizontal/vertical blanking periods
CSYNCN	I/O	Composite synchronization. Internally pulled-up (50 kΩ). In the master mode, generates the composite sync output. In the slave TV mode, generates a symmetrical signal which generates a horizontal frequency. In the slave DUAL mode, it generates the phase error between the master and slave VSCs. When the display is disabled, is an input to initialize the synchronization mode
DA	O	Display Active (3-state). LOW during vertical retrace period and in the high-impedance state during horizontal retrace. Otherwise HIGH
HSYNCN	I/O	Horizontal Synchronization (3-state). In the Master or Slave TV mode, is a horizontal sync output. In Slave DUAL mode, is a horizontal sync input
M/SN	I	Master/Slave input. HIGH when the Master mode is selected
PCLK	O	Pixel Clock (3-state). Video output lines V0 to V7 are valid on the rising edge
VSYNCN	I/O	Vertical Synchronization (3-state). In the Master mode, used as vertical sync output for the monitor. In Slave TV or Slave DUAL mode, is horizontal sync input
V0 to V7	O	Video Outputs (3-state) for pixels or control words
WRPN	O	Write Palette (3-state). When LOW, the data on V0 to V7 is control information. Used with an external palette or a back-end chip
		Coprocessor handshake
CYACKN	O	Cycle Acknowledge for coprocessor handshaking
CYREQN	I	Cycle Request. When asserted, a data transfer cycle for the coprocessor is provoked
		Miscellaneous signals
RSTINN	I	Reset Input. Schmitt trigger input used to initiate a reset sequence. Is pulled HIGH by an internal 50 kΩ resistor
TST	I	Test. Tied to V_{SS} for normal operation
V_{DD}	I	Power supply
V_{SS}	I	Ground
XT/2	O	Xtal/2 clock output. Output frequency = $f_{osc}/2$
XT/4	O	Xtal/4 clock output. Output frequency = $f_{osc}/4$
XTAL1	I	Crystal oscillator input. May also be used as an input for an external clock signal
XTAL2	O	Crystal oscillator output

Signals ending in N are active LOW, all other signals are active HIGH. The terms active, inactive, asserted and negated are used in the signal description independent of whether the signal is active in the HIGH state (logical 1) or in the LOW state (logical 0).

Short-wavelength semiconductor lasers for fibre-optic communication systems

PETER CHALL

Optical communication channels offer reliable and cost-effective signal transmission links that are capable of extremely high data rates. Semiconductor lasers and PIN-diode receivers coupled through low-loss fibre-optic cables are already commonplace in a wide range of applications. And, in response to the need for a versatile low-cost connection system for use in these applications, Philips has developed the receptacle, a fibre-optic coupling module that matches all connectors currently used in the fibre-optic industry.

Receptacles accurately align the light source (or detector) with the fibre core, and are available with a wide range of semiconductor lasers, LEDs and PIN-diodes. This publication outlines the basic principles of optical fibre transmission, examines the behaviour of light in a fibre, and presents typical output characteristics of receptacle connectors with both index-guided and gain-guided short-wavelength semiconductor lasers. The article also discusses the application of receptacles for modulated analog signal transmission and for high-speed digital data transmission through fibres, and presents reliability data for laser diodes.

FIBRE-OPTIC COMMUNICATIONS

Rapid information exchange plays an ever-increasing role in industrial automation, and in integrated services offered to offices and homes. Instant access to remote databases is demanded by professional and private users alike. Large volumes of high-speed data stretch conventional electrically-conducting cables to their limits, and extending these limits up for higher performance would require a lot of extra investment. The answer lies in fibre-optic communications, where advances in performance, reliability and production techniques of electro-optical components make low-cost high-speed systems a reality. Telecommunications systems, long-haul data links, local area networks (LANs), vehicle and aircraft bus-systems, and video links all benefit from advantages offered by these systems. Advantages like broad bandwidths and good noise immunity, no ground-loops, low weight, small size and long distances between repeaters. Transmitted data is also more secure than in systems with electrically-conducting cables. Links through potentially dangerous environments containing flammable or explosive materials (mines and refineries, for example) are safer with non-metallic cables. And in areas where electro-magnetic interference is a problem, fibre-optic cables provide the ideal solution.

High-speed data links

High-speed data links over distances from a few metres up to about one kilometre are currently attracting considerable interest. They are mainly found in computer applications and require relatively high data rates of some hundred Mbit/s. The choice of laser source and detector is strongly influenced by cost, and an attractive solution is offered by choosing standard, low-cost components such as low-power short-wavelength lasers and silicon photodetectors.

One such solution uses a standard Philips GaAlAs CD-laser. Over the last few years, this device has demonstrated outstanding reliability in Compact Disc players (for which it was originally designed), with a lifetime measured in millions of hours. For the receiver end, we have reliable silicon photodetectors readily available. Easy-to-use transmitter and receiver modules for this CD laser and detector combination are also available from Philips, making a low-cost, long-life fibre-optic communications system a practical reality. For ease of assembly, the lasers and detectors are supplied in receptacles, with a choice of industry-standard fibre-optic adapters.

Also included in the short-wavelength laser receptacle range are transmitter types with wavelengths from 780 to 870 nm, grown using the advanced Metal-Organic Vapour-Phase Epitaxy (MOVPE) process. With these it's possible to match laser parameters to a specific application. Typical advantages of this type of laser receptacle are:

- lasers at different wavelengths can be grown for multiplexing
- high feedback stability
- reduced modal noise in the fibre as a result of decreased coherence length of the laser (multimode operation)
- increased coupling efficiency achieved by matching the far-field of the laser to the numerical aperture of the fibre
- reduced operating current as a result of growing quantum-well active layers.

Receptacle programme

In addition to short-wavelength MOVPE lasers and the 1300 nm long-wavelength types, Philips offers a whole range of LEDs and PIN-diodes in receptacles. The LED programme includes both short and long wavelength devices, while the PIN-receiver photodiodes match the wavelengths of the lasers. Pigtailed versions are also available, in which the fibre entrance face is already prepared to effectively reduce back-reflection into the laser cavity. Figure 1 gives recommended types of laser receptacles for some major applications (with respect to transmission bandwidth and distance).

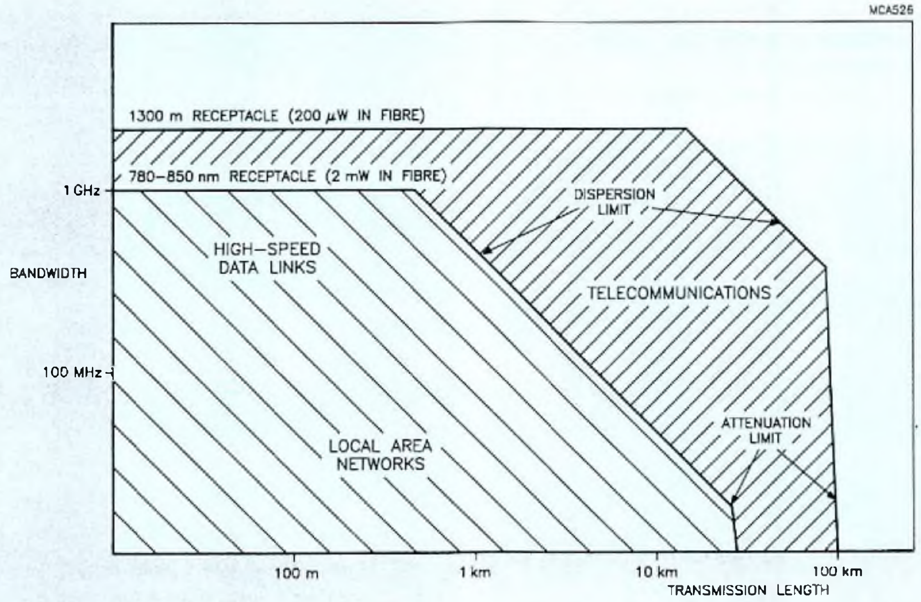

Fig.1 Fibre-optic transmission distance as a function of bandwidth for laser diode receptacles in various application areas

Receptacle construction

The receptacle consists of three standard sub-assembly parts: laser, lens holder, and adapter for the optical connector. All standard adapters used in the fibre-optic industry, such as FC, SMA, ST, and pigtails, are available. The lens holder part also includes the means for receptacle mounting (two-hole flange, four-hole flange, bulkhead, PCB, etc.). The laser is hermetically sealed with a flat glass window.

To accurately focus the laser source onto the fibre core, we carry out fine mechanical alignment in X, Y and Z directions with the laser diode in an active mode. We align the laser and lens holder in the Z directions, and the adapter carrying an optical connector in the X and Y directions until maximum optical output power is obtained. This is all done fully automatically on a computer-controlled system.

Once aligned, the assembly is precision-welded together, using Nd-YAG laser welding techniques. A section through a typical receptacle assembly is shown in Fig.2.

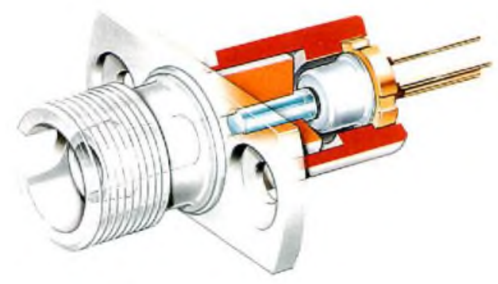

Fig.2 Section through a typical laser diode receptacle

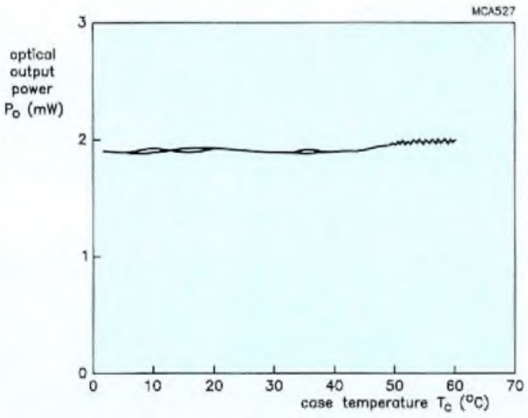

Fig.3 Variation in optical output power of laser diode in receptacle during repeated temperature cycling from 0 to 60 °C

The use of the same type of stainless steel for laser holder, lens holder and adapter guarantees excellent temperature stability of the receptacle assembly. This is demonstrated in Fig.3 which shows a typical cycling curve for variation in optical output power (P_o) with temperature over a range of 0 to 60 °C.

SIGNAL TRANSMISSION THROUGH OPTICAL FIBRE

This section looks at the behaviour of light in a fibre. The information-carrying capacity of a glass-fibre strand is limited by the degree of pulse dispersion, and by attenuation from absorbtion and scattering. The dispersion is the result of two mechanisms: modal dispersion, and chromatic dispersion.

Modal dispersion

Modal dispersion is due to the different transit times of rays travelling through the fibre at different angles (see Fig.4(a)). Two approaches to fibre design are used to reduce modal dispersion: graded-index fibre, and monomode fibre.

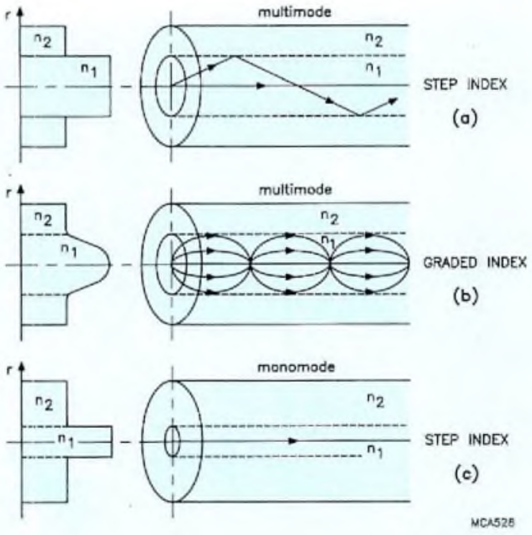

Fig.4 Fibre-optic cable types: (a) step-index multimode; (b) graded-index multimode; (c) step-index monomode

In the core of a graded-index fibre, the index of refraction changes radially according to a parabolic profile as shown in Fig.4(b). With such a profile, the velocity of light in the outer part of the core is higher than in the axis region. This gives high-angle rays the opportunity to speed up, and keep pace with the low-angle rays travelling close to the axis. By carefully tailoring the index profile, a graded-index fibre can be matched to the transmission wavelength.

The Philips Plasma-Activated Chemical Vapour Deposition (PCVD) fibre-growth process allows this accurate control of index profile, and gives a very broad bandwidth – 2.3 GHz.km with a 1300 nm laser, for example. The same fibre used at 850 nm still has a bandwidth of 480 MHz.km (although by matching the index profile to this wavelength, the bandwidth would be just as high as the standard graded-index fibre for 1300 nm). This type of multimode fibre coupled to a CD-laser is ideal for high-speed data links in computer applications.

In the monomode fibre approach to reducing modal dispersion, the diameter of the core is decreased, typically to 9 µm for a 1300 nm transmission wavelength (see Fig.4(c)). A small diameter core influences the guiding mechanism in such a way that only the zero order mode is confined to the core. This mode represents a plane electromagnetic wave travelling in the axial direction through the fibre. The non-zero modes are suppressed.

Chromatic dispersion

When passing through a fibre, a short pulse of light comprising different wavelengths (as with longitudinal laser modes and broad spectrum LEDs) will be lengthened by chromatic dispersion. This is due to the wavelength-dependent velocity of light travelling through the fibre material (glass, plastic, etc.). The effects of this mechanism can be reduced by using monochromatic light (single longitudinal laser mode, for example), or by operating at a transmission wavelength where the index of the material does not change much over the wavelength range of the light source. For a silicon-dioxide (SiO_2) fibre, this dispersion minimum is near 1300 nm (see Fig.5).

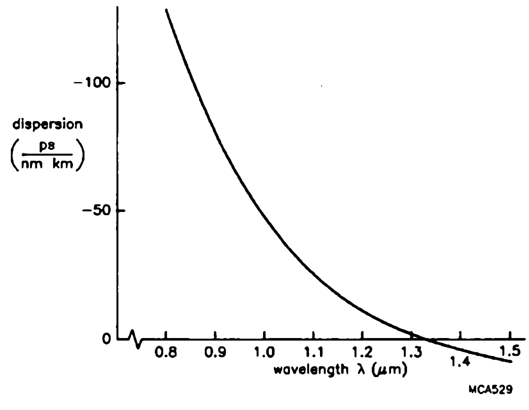

Fig.5 Dispersion with respect to wavelength characteristic for a SiO_2 fibre-optic cable

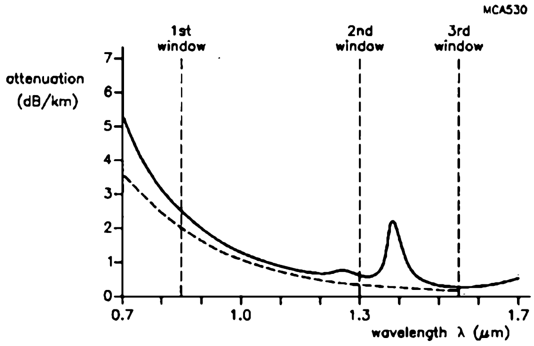

Fig.6 Attenuation of light as a function of wavelength through a Philips Components graded index GI50/125 µm fibre-optic cable. The dotted line represents the theoretical minimum attenuation that can be achieved, determined by Rayleigh scattering

Attenuation

Another factor limiting the information-carrying capacity of an optical fibre is attenuation by absorption and scattering. The amount of attenuation resulting from these mechanisms is also strongly wavelength-dependent. The attenuation curve shown in Fig.6 shows minima at wavelengths of 850 nm, 1300 nm and 1550 nm (the three operating windows). The wavelength at which minimum attenuation occurs is close to 1550 nm.

In an attenuation-limited transmission system, the distance between repeaters is determined by the optical power reaching the receiver. The electrical signal generated by the photodetector must be of sufficient amplitude to discriminate against the noise level in the detection system. The attenuation limits given in Fig.1 allow for a power margin of 15 dB. This is necessary to reach a certain bit error-rate, and to balance losses in splices and connectors.

LIGHT OUTPUT CHARACTERISTICS

Figure 7(a) shows the light-current characteristics for the receptacle-mounted CQF23 index-guided laser with a 790 nm wavelength, and Fig.7(b) for the CQF25B gain-guided laser with a wavelength of 850 nm. The threshold current at which the optical output power (P_o) increases sharply is a function of temperature, while the gradient of the characteristic remains almost constant as the temperature is increased. The higher threshold current of the gain-guided device in Fig.7(b) is the price paid for optical feed-back stability - note the slight instability in P_o above 1 mW displayed by the index-guided laser. The curvature of the gain-guided laser's characteristics near the threshold current is explained by the amount of spontaneous emission at lower output powers. For analog modulation, the laser must be biased in the linear portion of the characteristic to reduce harmonic distortion.

The stability of the 850 nm gain-guided laser with respect to optical feedback is due to its short coherence length. The coherence length of a laser is dependent on the width of the wavelength spectrum. The 790 nm index-guided laser displays monomode behaviour from 1 mW upwards (see Fig.8 for various output power values), whereas the gain-guided type has a multimode spectra (shown in Fig.9). Note that the width of the spectra decreases as output power level increases.

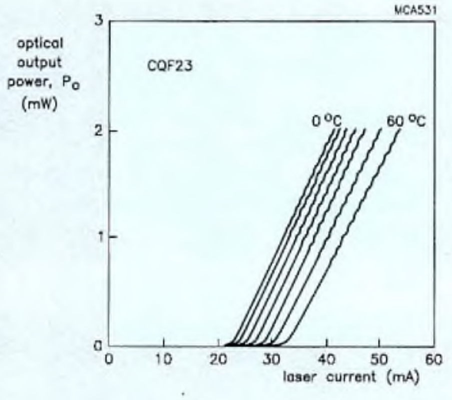

Fig.7(a) Optical output power as a function of laser current for the CQF23 index-guided laser for temperatures from 0 to 60 °C in 10 °C steps

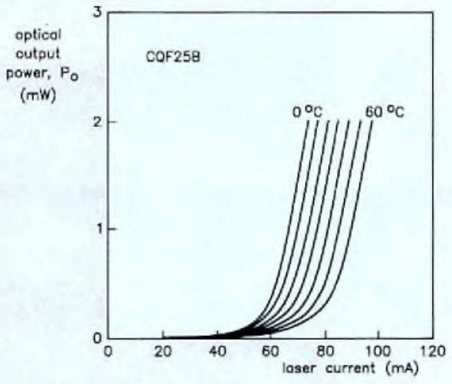

Fig.7(b) Optical output power as a function of laser current for the CQF25B gain-guided laser for temperatures from 0 to 60 °C in 10 °C steps

To plot these characteristics, the laser is coupled to a PIN-diode receiver via a two metre long glass-fibre cable. The photosensitive area of the PIN-diode is large enough to collect all light emitted from the fibre. Optical output power is measured as laser current is increased.

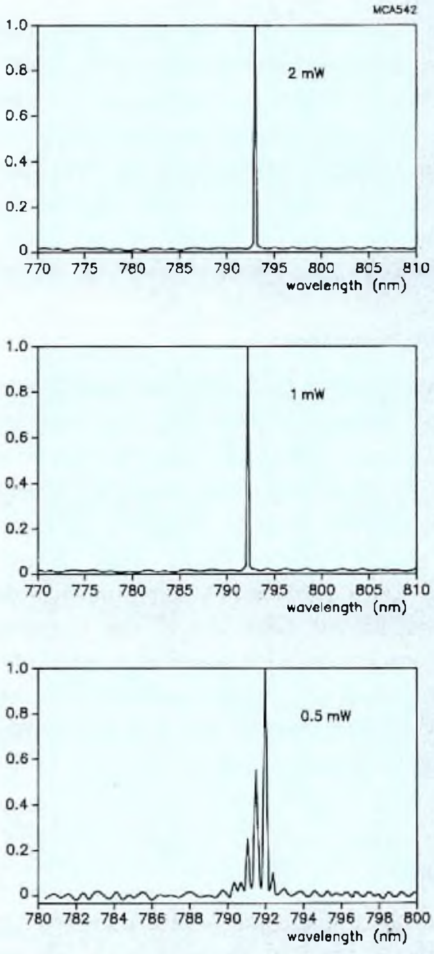

Fig.8 Mode behaviour of CQF23 index-guided laser with optical output power of 2, 1 and 0.5 mW

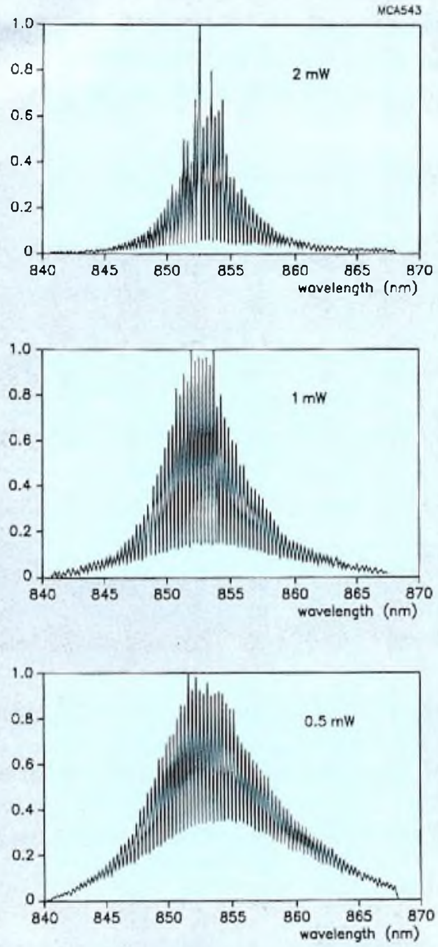

Fig.9 Multimode spectra of CQF25B gain-guided laser with optical output power of 2, 1 and 0.5 mW

ANALOG MODULATION

For analog data transmission through a fibre (for example, in a video link), the signal modulation current (I_m) is superimposed on the bias current (I_b). The principle of amplitude modulation of laser light is shown in Fig.10 for a sinewave modulation current. Two parameters are significant for retrieving the information from the modulated optical output: bandwidth and harmonic distortion. To measure these parameters, the experimental set-up in Fig.11 is used.

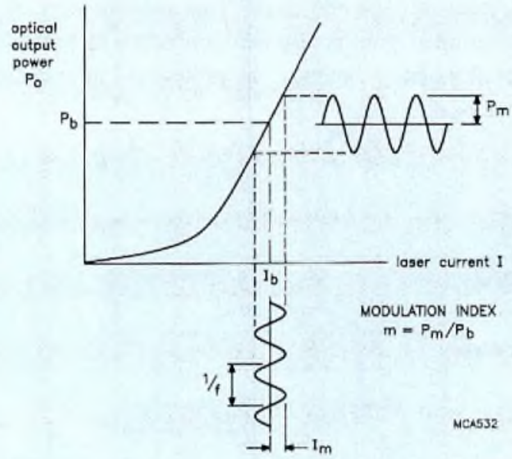

Fig.10 Amplitude modulation of optical output power of a laser diode by superimposing modulation current (I_m) on the device bias current (I_b)

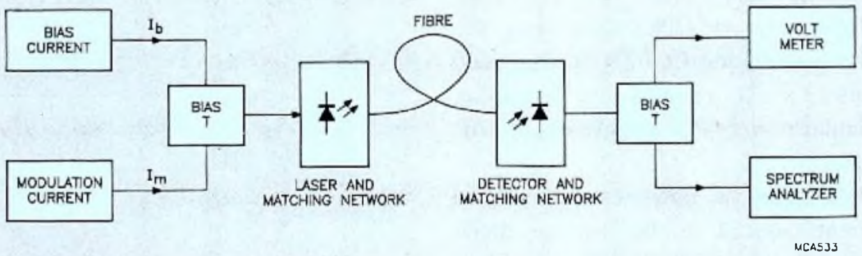

Fig.11 Experimental set-up for measuring amplitude modulation parameters of a laser diode in an analog transmission line. Modulation current is provided by a signal generator, and is superimposed onto the laser bias current source. At the receiver, a fast photodiode (with a bandwidth greater than 1 GHz) converts the light back to an electrical signal, which is separated into modulated photocurrent and DC-component. A spectrum analyzer is used for measuring the power spectrum of the modulated photocurrent.

Results

Figure 12 shows the electrical power spectrum of the CQF25B gain-guided laser diode modulated at a fundamental frequency of 200 MHz. In addition to the fundamental, the second harmonic can be seen with a separation of about −45 dB. In this example with a bias optical output power of 2 mW and a modulation index of 0.25, higher-order harmonics are hidden in the background noise. The steady increase of noise towards the higher frequencies is due to the resonant frequency of the laser diode.

At changing current injection, a new balance between carrier density and laser photon density must be found. The settling time of this balance is again related to the resonant frequency of the laser. The spectral part of the randomly emitted photons (noise) concentrated around the resonant frequency shows a preferred amplification (resonance peak).

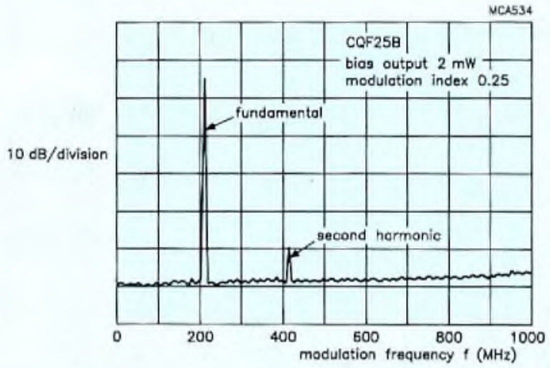

Fig.12 Electrical power spectrum of the modulated photocurrent of the CQF25B gain-guided laser diode modulated at a fundamental frequency of 200 MHz

Bandwidth

The frequency response for receptacles containing the CQF23 index-guided laser and the CQF25B gain-guided laser are shown in Figs 13 and 14 respectively. Depending on the bias optical output power (P_b), the electrical 3 dB point can exceed 1 GHz.

At the electrical 3 dB point, the power spectrum of the modulated photo-current induced in the detector diode drops to half its low frequency value. The corresponding optical amplitude (P_m) of the modulated laser light is reduced by only 29% (1.5 dB optical power). The increase in frequency response towards the high frequencies in the lower trace of Fig.13 is again due to preferred amplification near the resonance peak of the laser diode.

Location of this resonance peak is determined by the guiding mechanism (gain or index), optical feedback into the laser cavity and the output power. The amplitude of the resonance peak is determined by the damping mechanism in the laser. A high spontaneous emission level is an effective way to damp the resonance peak.

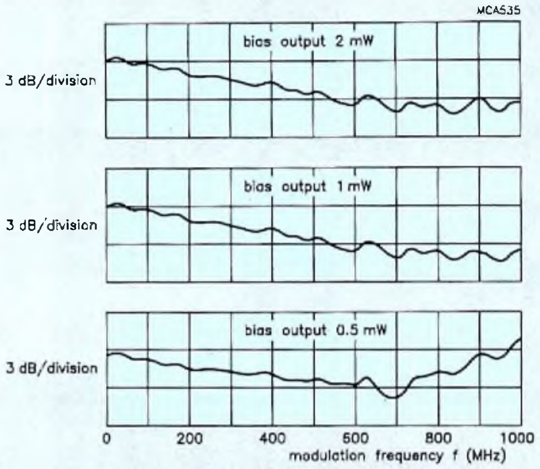

Fig.13 Frequency response of the CQF23 index-guided laser diode with output biased at 2, 1 and 0.5 mW. The modulation frequency is swept from 0 to 1 GHz, and the spectrum analyzer is used as a spectral filter synchronously locked to the fundamental.

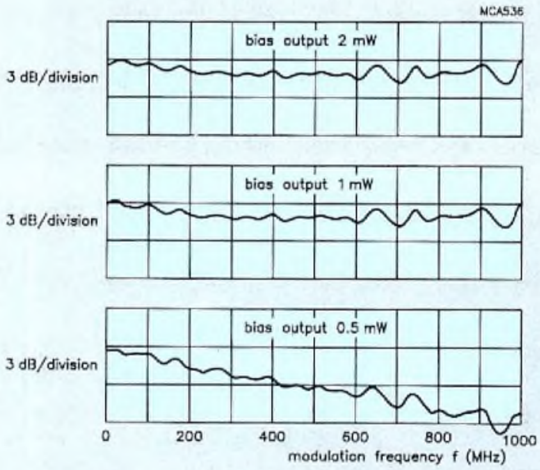

Fig.14 Frequency response of the CQF25B gain-guided laser diode with output biased at 2, 1 and 0.5 mW. The modulation frequency is swept from 0 to 1 GHz, and the spectrum analyzer is used as a spectral filter synchronously locked to the fundamental.

Harmonic distortion

In addition to the fundamental frequency, the modulated laser output of a laser diode also contains higher harmonic products. The level of distortion as a result of these harmonics is related to modulation frequency, guiding mechanism, bias output power, modulation index and optical feedback into the laser cavity. Figure 15 shows the separation between fundamental and second harmonic as a function of modulation index (m) for fixed fundamental frequencies of 50 MHz and 200 MHz for both index-guided and gain-guided lasers.

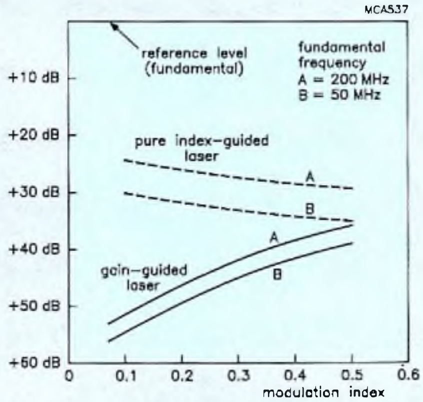

Fig.15 Second harmonic as a function of modulation index (m) for index-guided (dotted line) and gain-guided (solid line) laser diodes

For gain-guided lasers, the increase in second harmonic distortion at higher modulation indices is a result of the curvature of the optical output power/current characteristic near the threshold current (refer to Fig.7(b)). This curvature is a result of high spontaneous emission which effectively attenuates the resonance peak, and reduces the coherence length of the laser light to a few centimetres. Both these effects contribute to the reduced optical feedback problems in the gain-guided CQF25B. The increased harmonic distortion at higher modulation indices can be avoided by biasing this type of laser at a higher output power level.

Whilst harmonic distortion in gain-guided lasers is related to the linearity of the optical output characteristics, in index-guided lasers it is mostly as a result of optical feedback. The second harmonic of the pure index-guided device in Fig.15 hardly varies as a function of modulation index or bias output power, but reacts to a small amount of light reflected back into its cavity.

This unavoidable optical feedback can disturb the modulation behaviour of a laser diode. The reflecting surfaces of lenses, entry and exit faces of the fibre and the detector all form additional cavities which effectively couple to the laser cavity. Depending on the coherence length of the laser, such coupling affects both the fundamental and the harmonics.

HIGH-SPEED DIGITAL TRANSMISSION

High-speed digital data transmission through fibre-optic cables requires ultra-fast switching of the laser. The fast rise and fall times of laser diodes means very high data transmission rates can be obtained. The experimental set-up in Fig.16 is used to measure these switching times.

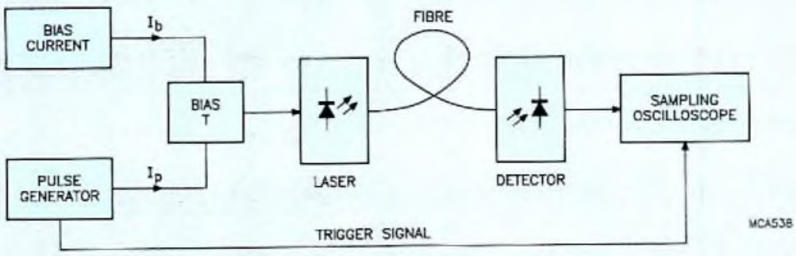

Fig.16 Experimental set-up for measuring rise and fall times of a laser diode in a high-speed digital transmission line. Current pulse (I_p) from a high-frequency pulse generator is superimposed onto the laser bias current (i_b). The optical pulse transmitted through the fibre is focused onto a photodiode with a cut-off frequency greater than 1 GHz. A sampling oscilloscope is used to examine the received pulse.

Measurement of rise and fall times

Figures 17 and 18 show the shape of the received pulse with various bias currents (I_b) for index-guided and gain-guided laser diodes respectively. It can be seen that the pulse shape is influenced by bias current, and that below the threshold current, a considerable delay is typical. However, rise times are very fast indeed (the slightly slower fall times are attributed to the relatively slow fall-time of the pulse generator used in this experiment). Modulation on top of the received pulses is due to the resonance peak of the laser.

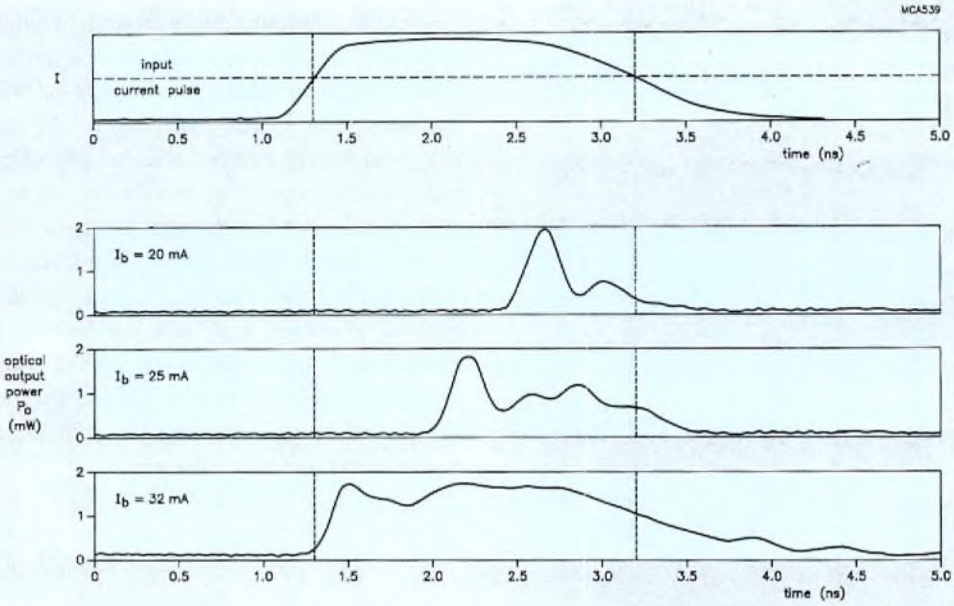

Fig.17 Pulse shape of received pulses using a CQF23 index-guided laser diode. The top trace shows the shape of the input current pulse, and the lower three traces show received pulses with bias currents (I_b) of 20, 25 and 32 mA

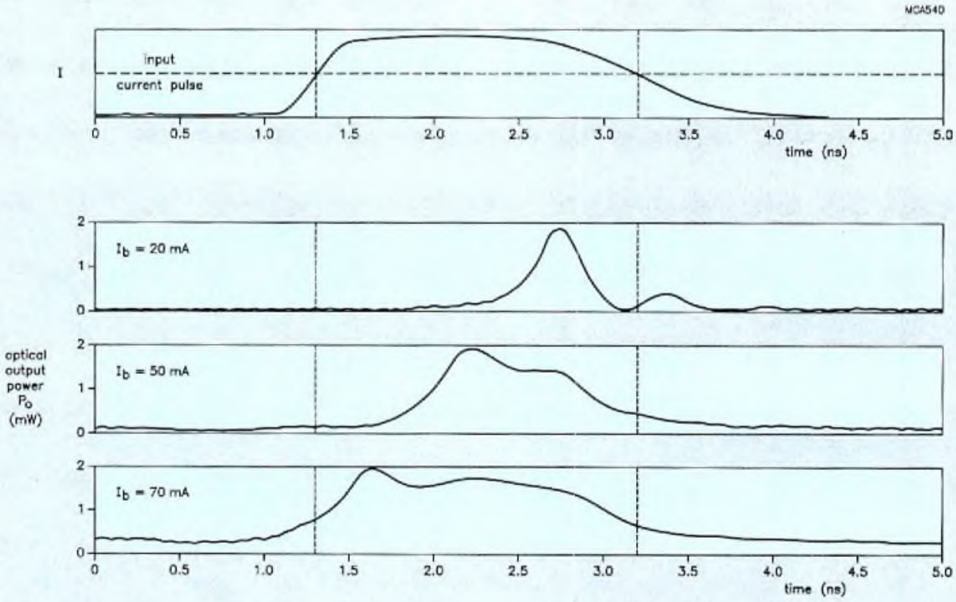

Fig.18 Pulse shape of received pulses using a CQF25B gain-guided laser diode. The top trace shows the shape of the input current pulse, and the lower three traces show received pulses with bias currents (I_b) of 20, 50 and 70 mA

RELIABILITY OF SEMICONDUCTOR LASER DIODES

This section presents typical performance data and light-current characteristics for index-guided and gain-guided laser diodes in fibre-optic communications. Both types benefit from our on-going commitment to quality and reliability, and from our heavy investment in research, development and high-volume manufacturing.

The reliable Liquid-Phase Epitaxy (LPE) process with Buried Twin-Ridge Structure (BTRS) for index-guided lasers has been in production for many years, initially for CD-type applications, but increasingly for a range of devices for optical communications. The advanced Metal-Organic Vapour-Phase Epitaxy (MOVPE) process offers control of device structures on an atomic scale. Reliability testing of both types has shown lifetimes measured in millions of hours.

BTRS lasers (CQF22 and CQF23 families)

Extended life-tests made during 1987 and 1988 on BTRS index-guided semiconductor laser diodes from the CQF22 and CQF23 families produced the results shown on the Weibull probability chart in Fig.19. These tests were conducted under the following conditions:

Activation Energy	0.6 eV
Optical output power (P_o)	3 mW
Ambient temperature (T_a)	60 and 70 °C
Test duration (t)	10 000 hr
Sample size	50

A failure is defined as $I_{op}:I_{op(0\ hours)} > 1.5$.

From the Weibull plot, the reliability data given in Table 1 are deduced:

TABLE 1
Reliability data for BTRS index-guided laser diodes

Characteristic life expectancy	240 000 hours
Instantaneous failure rate at t = 1000 hours	7.2×10^{-9} hr^{-1}
Instantaneous failure rate at t = 100 000 hours	4.5×10^{-6} hr^{-1}

During 1988 several important improvements have been made to the BTRS process to further increase reliability. These include:

- smaller chip-size
- glued PIN-diode crystals (in place of soldered crystals)
- increased temperature resistance of facet coating
- increased moisture resistance of facet coating.

Although extended life-tests on the improved BTRS devices have not yet been completed, no failures were recorded during accelerated life-tests made on 50 examples at ambient temperatures of 70 and 80 °C for 2500 hours (P_o = 3 mW). This points to a constant failure rate of less than 0.6×10^{-6} hr^{-1} (with a 90% confidence level).

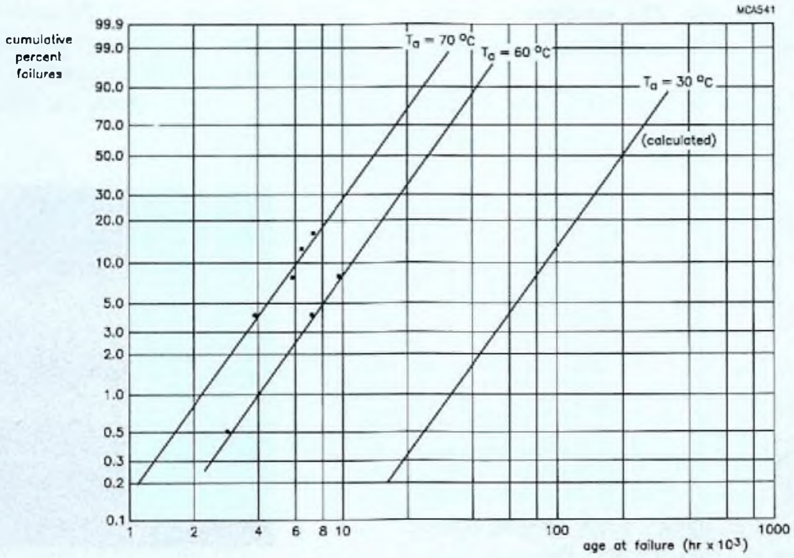

Fig.19 Weibull probability chart for cumulative failures in BTRS laser diodes

MOVPE lasers (CQF25 and CQF27 families)

Before shipping to customers, all MOVPE laser diodes are burnt-in for 48 hours at an output power of 5 mW and a case temperature of 80 °C. Extended life-tests made during the last four years on burnt-in MOVPE gain-guided semiconductor laser diodes from the CQF25 and CQF27 families produced the results in Table 2. These tests were conducted under the following conditions:

Activation Energy	0.6 eV
Optical output power (P_o)	5 mW
Case temperature (T_{case})	60, 70 and 80 °C
Test duration (t)	1000 and 5000 hr
Sample size	350

A failure is defined as $I_{op}:I_{op(0\ hours)} > 1.3$

TABLE 2
Life-test results for MOVPE gain-guide laser diodes

case temperature	number of failures	total device-hours
60 °C	0	947 500
70 °C	0	52 800
80 °C	3	96 000

Note: Owing to the extremely low number of failures, it is not possible to draw a Weibull probability chart with sufficient significance.

Assuming an activation energy of 0.7 eV (as a function of temperature), only 3 failures would occur in 16 million device-hours at a case temperature of 30 °C and output power of 5 mW. This results in a constant failure rate of less than 415×10^{-9} hr^{-1} (with a 90% confidence level), and a meantime to failure of more than 2.4 million hours.

CONCLUSIONS

We have shown that standard short-wavelength GaAlAs semiconductor lasers are ideally suited to low-cost, high-speed data transmission via an optical fibre. Philips offers these laser types assembled in receptacles. The receptacle program includes all standard adapters (FC, ST, SMA, etc.,), giving system designers considerable flexibility when specifying electro-optical components.

Receptacles can be assembled with either index- or gain-guided lasers, depending on the requirements of the application. If low-noise behaviour under optical feedback conditions is a key consideration, a gain-guided laser is the better choice. The flexibility of the MOCVD growth process also means that lasers can be produced at different wavelengths for optical multiplexing. If low current consumption is important, index-guided types are ideal. For certain applications, even tuning between the gain and index guiding mechanisms can be advantageous (SAS-laser type). In all cases, Philips' optical engineers can advise on the best type to use.

The fast rise- and fall-times of the GaAlAs-lasers means that very high data transmission rates can be achieved (refer to Fig.17). The oscillogram in Fig.20 shows the response of a CQF25B laser connected to a short graded-index fibre and pulsed with a 1 Gbit/s random bit pattern. This clearly shows that the laser can be turned on and then off in less than one nanosecond. The corresponding eye-pattern in shown in Fig.21.

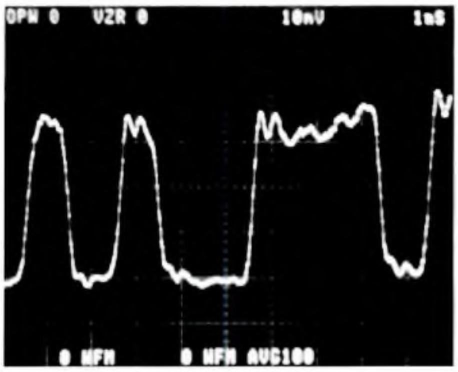

Fig.20 Response of CQF25B pulsed with 1 GBit/s bit pattern (triggered by the pattern itself). Horizontal scale 1 ns per division, vertical scale corresponds to 0.5 mW optical output power per division

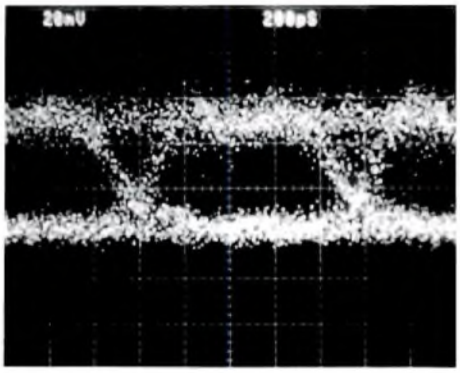

Fig.21 Corresponding eye-pattern triggered with a 1 GHz clock pulse. Horizontal scale 200 ps per division, vertical scale corresponds to 0.5 mW optical output power per division.

ICs for satellite TV reception

JOOST VERHOEKS

In recent years, a lot of experience has been gained in Europe with TV transmissions for three main types of satellites: low-power (20 W) communication satellites, medium-power (50 W) satellites, and high-power (200 W) Direct Broadcast Satellites (DBS).

Communication satellites like the Intelsat and Eutelsat have already been transmitting well-known stations like Sky channel and Super channel to Europe for some time. Recently, the German Kopernikus satellite also became operational. All these satellites use the PAL TV transmission standard. Medium power satellite ASTRA uses PAL and D2MAC TV transmission standards.

At present, the three most important Direct Broadcast Satellites in Europe are; BSB (British Satellite Broadcast), TDF1 (Tele Diffusion de France 1) and TV-SAT2. Their broadcasts are mainly directed to a specific country; BSB to the United Kingdom, TDF1 to France and TV-SAT2 to Germany. All the DBS transmissions are in the MAC format (mainly D2MAC), and various encryption systems are used. Since the high field strength of the signals from these satellites minimizes the size of the receiving dish antenna that's needed, DBS TV reception is now a rapidly growing field of interest.

Figure 1 shows a typical DBS TV reception system. The 10.95 to 12.75 GHz signals from the satellite are received by a dish antenna and converted to a first IF of 950 MHz to 1750 MHz by a low-noise downconverter. A coaxial cable transports the signals to an indoor unit, where a tuner selects, amplifies and demodulates one of the FM signals in the 800 MHz wide IF band. The indoor unit also contains control functions and circuits for further processing of the video and sound signals from the demodulator. The circuitry for the indoor unit can either be incorporated in the TV set or housed in a separate unit.

This article describes a set of ICs for building a DBS TV receiver indoor unit which, though inexpensive and compact, has very high performance. As shown in Fig.2, the indoor unit comprises a tuner/FM demodulator section and a sound and vision signal processing section that can decode MAC (CMAC, DMAC and D2MAC) signals. Also available is a comprehensive range of decoder ICs for PAL, SECAM and NTSC signals.

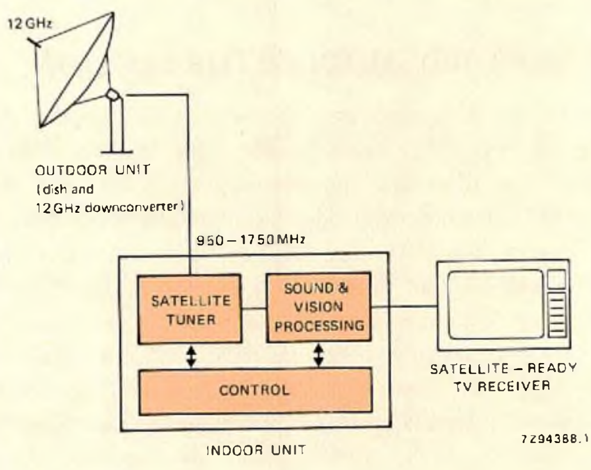

Fig.1 Components of a satellite TV receiving system

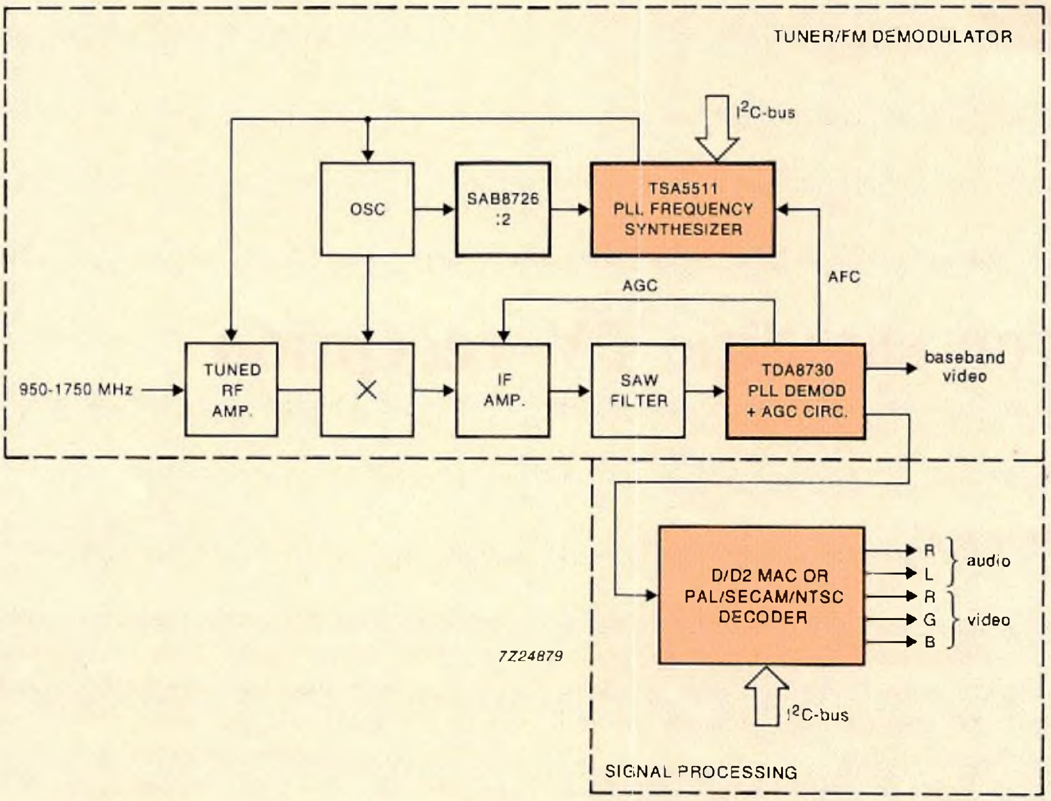

Fig.2 Indoor unit of a satellite TV receiving system

TUNER/FM DEMODULATOR SECTION

The tuner/FM demodulator, shown as a simplified block diagram in Fig.3, receives signals in the frequency range 950 MHz to 1750 MHz and delivers PAL, NTSC, SECAM or MAC video baseband signals (plus sound subcarriers in the case of non-MAC reception) to the sound and vision processing section. Integrated prescaler SAB8726 and frequency synthesizer TSA5511 are used in a very accurate PLL for generating a stable local-oscillator signal. A TDA8730 IC performs the PLL FM demodulator/AGC functions. A microcontroller in the indoor unit can control the frequency of the synthesizer and the functions of the vision and sound processing section via the simple 2-wire Inter-IC (I^2C) bus.

Since the number of signals at the tuner input will increase as more dBS channels become operational in the future, the tuner/FM demodulator is designed for minimum intermodulation distortion. Because of the high gain of the downconverter, the noise figure requirements are less critical. The extensive use of surface-mounted components minimizes parasitic effects and reduces the size of the indoor unit.

Purchase of Philips I^2C components conveys a license under the Philips I^2C patent to use the components in the I^2C system, provided the system conforms to the I^2C specifications defined by Philips.

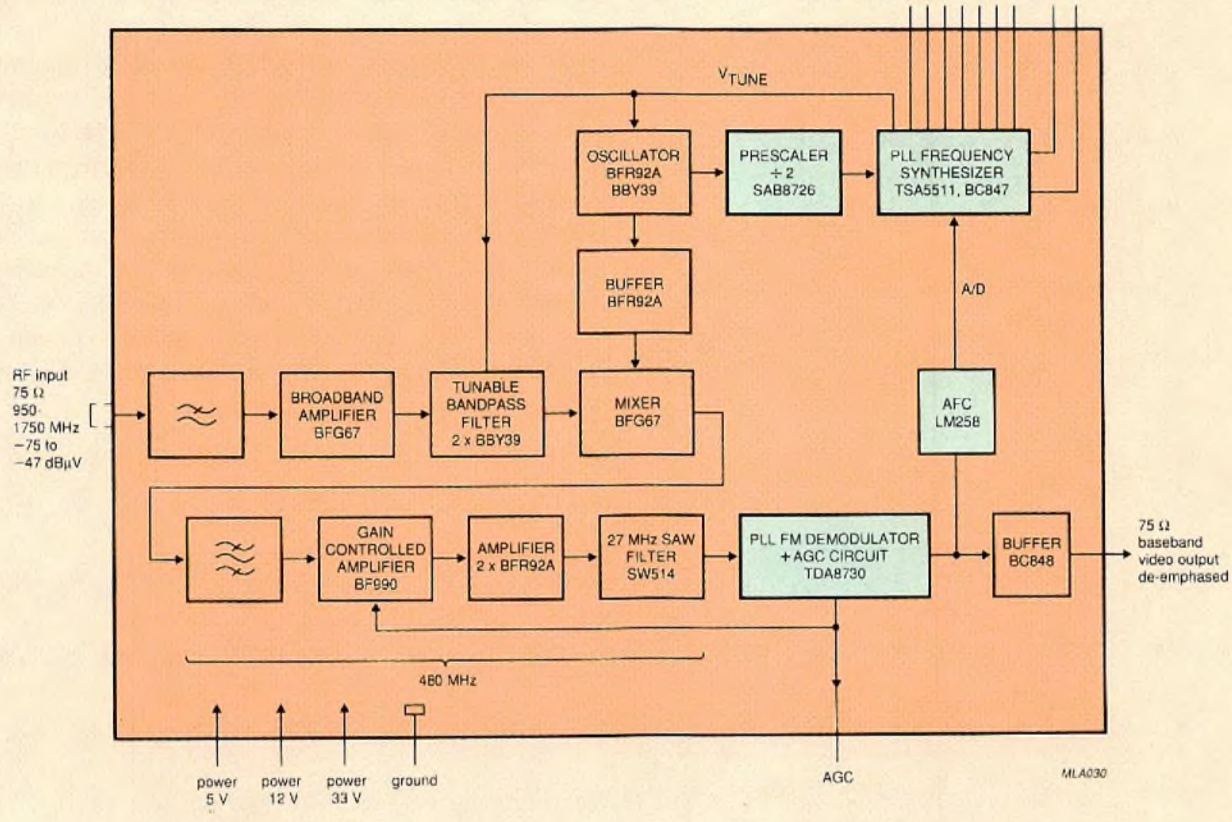

Fig.3 Tuner/FM demodulator section of the indoor unit

Divide-by-2 prescaler SAB8726

The SAB8726, shown in block diagram form in Fig.4, receives its 1.41 GHz to 2.25 GHz input signal from the tuner VCO. The very sensitive differential inputs are internally biased to permit capacitive coupling but, since the input is asymmetric in this application, one input is connected to ground via a capacitor. The differential output stage provides capacitively-coupled symmetrical drive for the signal input of the I²C-bus controlled PLL frequency synthesizer TSA5511 to minimize radiation problems. Assymmetrical drive is also possible.

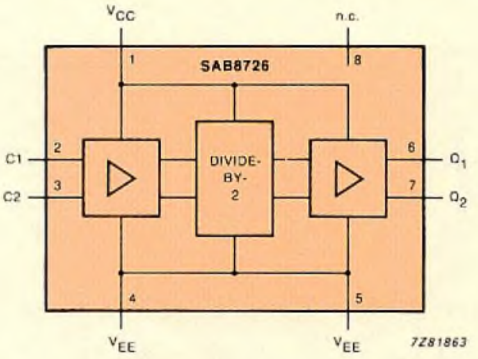

Fig.4 SAB8726 divide-by-2 prescaler

Frequency synthesizer TSA5511

This is a single-chip I²C-bus controlled PLL frequency synthesizer for operation over the frequency range 64 MHz to 1300 MHz. As shown in Fig.5, it contains a sensitive ÷8 prescaler for the input from the ÷2 SAB8726 external prescaler, a 15-bit programmable divider and a digital phase detector with in-lock detection. An on-chip low-distortion oscillator/÷512 divider controlled by a 4 MHz crystal generates a reference frequency of 7.8125 kHz for the phase comparator. The minimum tuning step for the tuner VCO is 125 kHz. The tuning voltage is derived from a charge pump plus integrator with a discrete transistor. The charge pump is controlled by a programmable current so that the loop gain of the PLL can be software controlled to ensure fast and stable locking. The built-in 3-bit ADC is used for a software-controlled tuner AFC function.

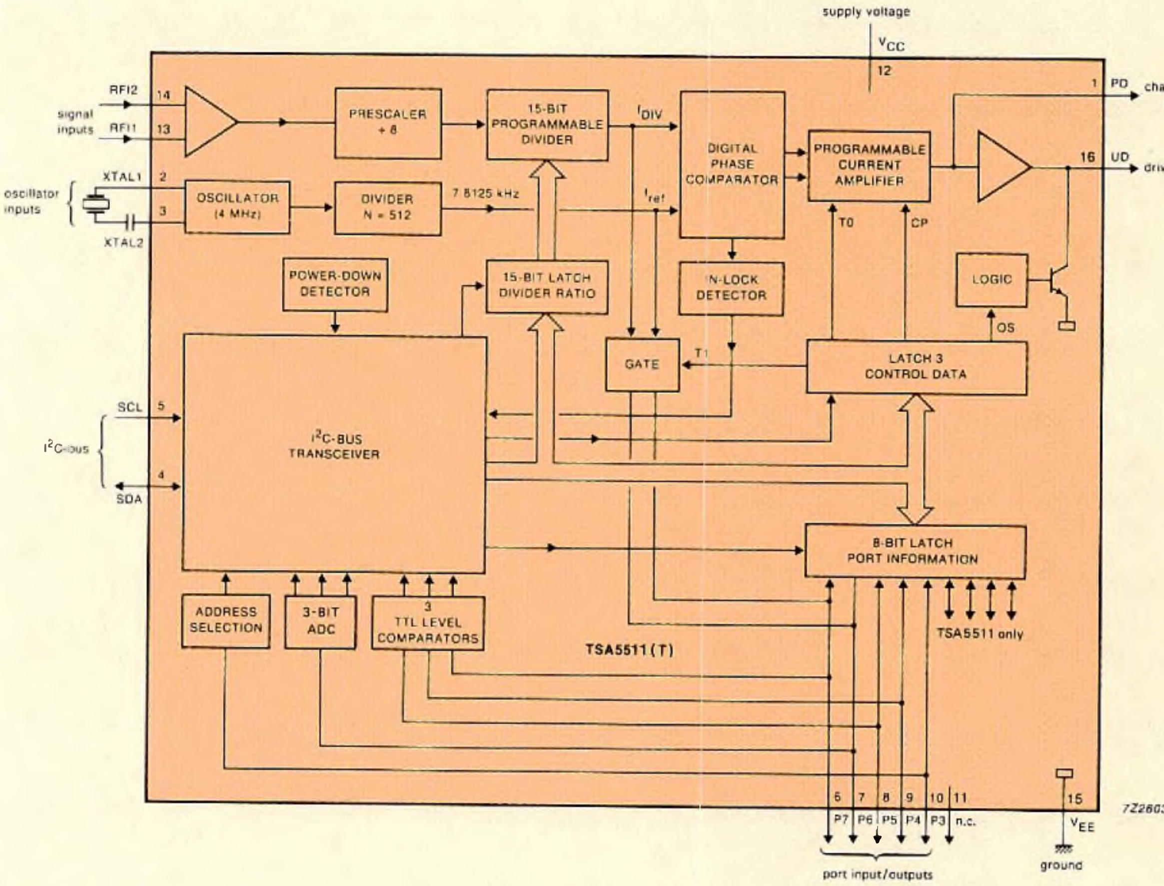

Fig.5 The TSA5511 PLL frequency synthesizer

PLL FM demodulator TDA8730

This single-chip PLL FM demodulator (Fig.6) is fabricated in a 5 V bipolar oxide-isolated Subilo-N process. It's optimized for operation at 479.5 MHz but can function over the frequency range 300 MHz to 650 MHz. It requires very few peripheral components and is specifically designed for use in the DBS satellite TV tuner. The layout of the IC has been carefully designed to prevent spurious radiation and crosstalk in the RF circuit. A built-in voltage stabilizer renders the circuit insensitive to supply voltage variations. The demodulator can handle FM deviations of up to 25 MHz peak-to-peak and still maintain very good linearity.

The wideband RF preamplifier receives its input directly from the SAW filter (shown in Fig.2) and provides correct termination for the filter. After buffering, the input signal is applied to a phase detector where its phase is compared with that of a reference signal from an internal VCO tuned by an external LC circuit with varicap diode and temperature compensation. With an RF preamplifier input of −37 dBm, the phase detector gain is 0.45 V/rad.

The active loop filter consists of an integrated opamp with an open-loop gain of 40 dB, internal frequency compensation and an external RC feedback network. This network can be optimized for maximum threshold extension performance. Buffer stages provide low impedance sources for the demodulated output signal and varicap drive signal.

The AGC circuit comprises a quadratic temperature-compensated level detector and an amplifier which has a sink/source output and can be externally adjusted to set the AGC threshold between −40 dBm and −34 dBm referred to the RF preamplifier input. An external capacitor ensures AGC loop stability. Although the IC is fabricated in a 5 V process, the AGC output range is 2 V to 9 V. Because of the high gain of the AGC circuit, the phase detector input is held constant within 0.2 dB for a 30 dB change in the input to the overall tuner/FM demodulator.

TYPICAL PERFORMANCE OF A TUNER/FM DEMODULATOR SECTION
(according to fig.3)

RF input frequency range	950 to 1750	MHz
RF input level	−65 to −30	dBm
Intermediate frequency	479.5	MHz
Noise figure	< 12	dB
RF intermodulation distance at maximum input level	> 50	dB
Input VSWR relative to 75 Ω	< 2	
For DBS/PAL TV signals:		
Threshold extension (static)	2.5	dB
Differential gain error	< 5	%
Differential phase error	< 3	deg

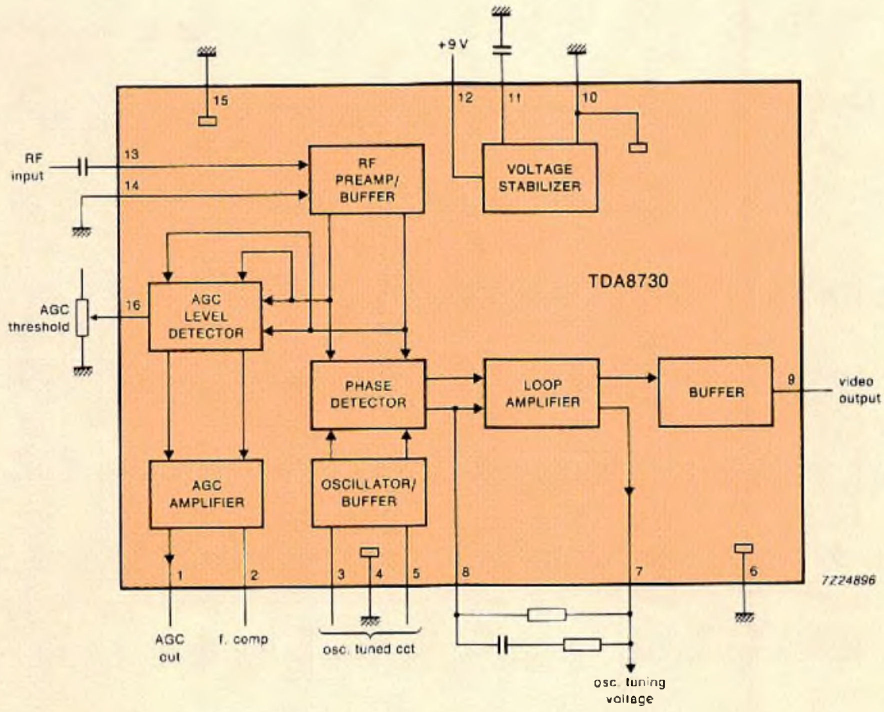

Fig.6 The TDA8730 PLL FM demodulator and AGC circuit

SOUND AND VISION SIGNAL PROCESSING SECTION

Multi-standard MAC decoder ICs

The decoder shown in Fig.7 is the result of cooperation between Philips, Nordic VLSI and Plessey Semiconductors. Nordic VLSI designed the decoder and developed most of its 1.5 micron CMOS circuitry. Philips and/or Plessey Semiconductors manufacture the full-custom VLSI CMOS ASICs at the heart of the decoder. To complete the decoder, Philips is developing the operating software and supplies ICs from their extensive bipolar and CMOS ranges to perform the analog signal processing, teletext decoding, control and data conversion functions.

The main part of the decoder comprises four full-custom VLSI CMOS ASICs: MAC control circuit SAA1720, MAC video circuit SAA1710, MAC sound circuit SAA1730 and MAC data circuit SAA1750. These full-custom ICs are complemented by a MAC ANalog (MACAN) circuit TDA8734T which performs analog signal processing and includes functions such as data slicing, clock recovery and video clamping.

ICs from our standard television range are used for the microcontroller and for:

- A to D conversion of the vision signal (TDA8703)
- D to A conversion of the video signal (3 × TDA8702)
- Teletext decoding (SAA5243)
- Matrixing/video control/teletext insertion (TDA3505)
- Filtering of the sound signal (SAA7220)
- D to A conversion of the stereo sound signal (TDA1543)

The conditional access control module handles both over-air and/or local addressing for decryption. It can either be detachable (smart card) or form a permanent part of the TV set. In either case it's connected to the microcontroller.

In addition to being able to handle all of today's European dBS TV transmission standards, the architecture of this advanced multi-standard MAC decoder also facilitates extensions and will be able to accommodate the requirements of additional satellite TV services that may be defined in the future (e.g. HDTV).

Non-MAC decoder ICs

Our extensive range of television ICs also includes a range of non-MAC decoding ICs for the sound and vision signal processing sections of PAL, NTSC and SECAM decoders.

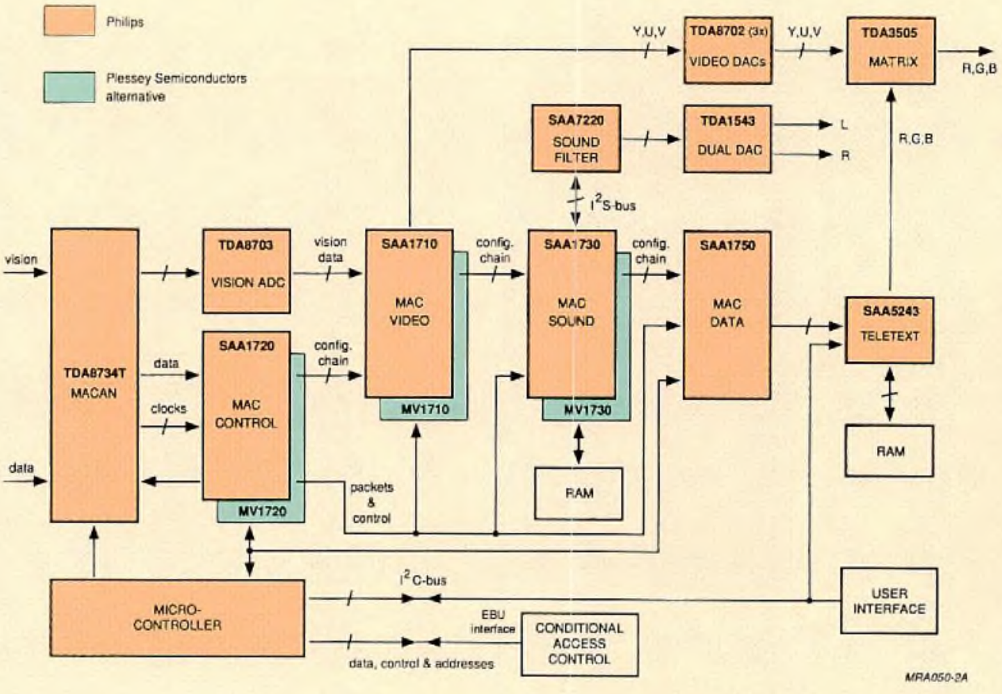

Fig.7 The multi-standard MAC decoder

ICs for NICAM 728 digital sound in TV sets

DAVE SLOWGROVE

Since the advent of satellite television, interest in stereo and dual-language TV sound has greatly increased. In Europe at present, most two-channel TV sound transmissions are based on a two-carrier FM system. However, the requirements of this system are stringent – the slightest imperfection can cause considerable crosstalk between channels, which is particularly detrimental to dual-language broadcasts.

NICAM 728 (Near-Instantaneously Companded Audio Multiplexing at a rate of 728 kbit/s) was developed to overcome these crosstalk problems and produce hi-fi TV sound of a quality comparable to that of a compact disc player. It has recently been adopted as the European standard system for broadcasting digital TV sound and is already used by broadcasting companies in Scandinavia, the United Kingdom, Spain and New Zealand.

For compatibility with current TV sound transmission systems, NICAM offers an analog sound channel. Furthermore, NICAM offers two additional digital sound channels which can be used for an extra:

- digital stereo signal,
- two independent digital mono signals (two additional languages/background music),
- digital mono signal and a data channel, or
- one transparent data channel.

To ensure the system's popularity with the consumer, TV manufacturers will require the most cost-effective NICAM receiver circuitry. As a renowned TV manufacturer ourselves, we understand this, and the necessity to guarantee performance, quality and reliability. And as Europe's leading IC manufacturer, we have the expertise to implement the NICAM receiver circuitry with the largest scale of integration, the highest quality and at the lowest possible price.

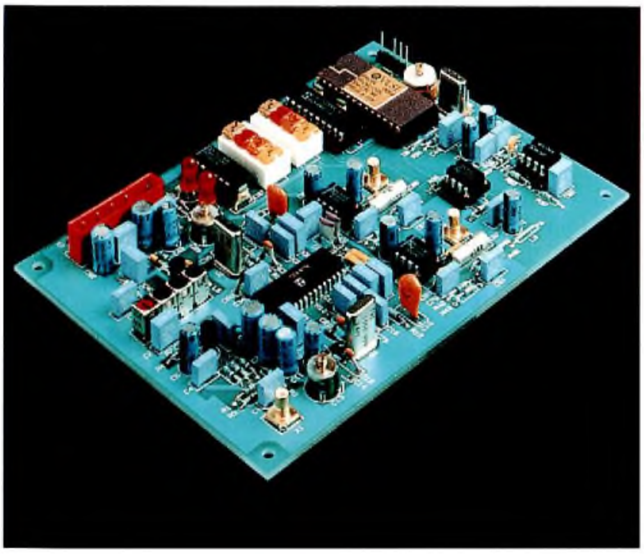

NICAM 728 – DIGITAL TV SOUND FOR THE NINETIES

NICAM 728 works by alternately sampling the L and R channel signals at a frequency of 32 kHz, with a resolution of 14 bits per sample. For transmission, this is compressed to 10 bits by a technique known as Near Instantaneous Companding (NIC). For this to work effectively, the digital audio signal has to be transmitted with a code that tells the TV receiver how much the signal has been compressed. This is called the 'scale-factor code' and is a 3-bit word incorporating some error-protection functions.

The digital data is sent in 'frames' containing 704 bits of sound signal and 24 bits of control and data signals, so the total number of bits per data frame is 728 – hence the name NICAM 728. A complete frame of data lasts 1 ms: a total data rate of 728 kbit/s.

As in a CD system, further error protection in NICAM is ensured by using a cross-indexing system which 'shuffles' the bits in each 728 bit block in a predetermined manner, the reverse process being performed at the receiver to restore the correct order of the block. After cross indexing or interleaving, but before transmission, the bit-stream is scrambled for a more even energy dispersal. This shapes the transmitted spectrum to avoid unnecessary sidebands. The scrambling is synchronized with a 'frame code', which is not scrambled before transmission. The frame code controls the pseudo-random sequence generator in the receiver for de-scrambling the signal. In the receiver, de-scrambling precedes de-interleaving.

For transmission, the serial data is converted to two-bit parallel form. Each input-bit pair then determines the phase of the transmitted carrier, as follows:

input bit-pair		carrier phase-change
A	B	(deg)
0	0	0
0	1	−90
1	1	−180
1	0	−270

The carrier phase can assume one of four rest-states, separated by 90°. Each bit-pair will shift the phase of the carrier by a designated amount, with reference to the previous rest-state. This is known as differential quadrature phase-shift keyed (DQPSK) modulation. At the receiver, the data is recovered by comparing phase-shifts from one bit-pair to the next.

Figure 1 gives the spectrum of the transmitted signal and Table 1 the principal system characteristics.

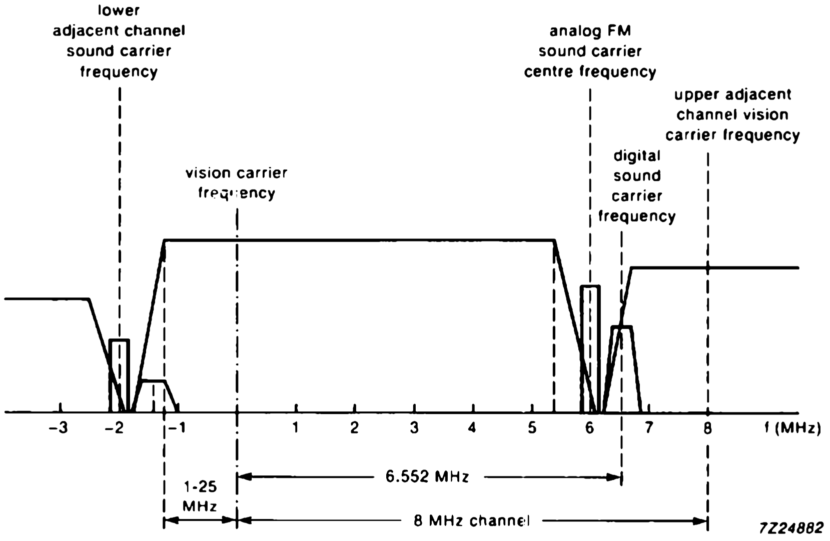

Fig.1 Frequency band of an ideal TV transmission showing colour picture and sound signals with added NICAM spectrum

TABLE 1
Principal system characteristics

frequency difference of second sound-carrier and vision carrier:	6.552 MHz (I), 5.85 MHz (B,G)
level of second sound-carrier referred to peak vision-carrier:	–20 dB
modulation of second sound-carrier:	DQPSK
bandwidth of transmitted PSK signal:	700 kHz
overall bit rate:	728 kbit/s
signal options:	– stereo – independent mono – one mono plus 352 kbit/s data – 704 kbit/s data
audio sampling rate:	32 kHz
audio coding:	14 to 10 bit NIC
ancillary data capacity:	11 kbit/s

PHILIPS' ICs FOR NICAM

Shortly, we'll have a three-chip set available for a complete NICAM receiver in a TV set. Hi-fi audio output is from a dual DAC (TDA1543), originally developed for our CD players. The DAC is fed by two ICs specifically developed for NICAM 728 receivers (see Fig.2): the TDA8732 NIDEM (*NI*CAM ***DEM***odulator) and the SAA7280 TDSD (***T****errestrial* ***D****igital* ***S****ound* ***D****ecoder*).

Figure 3 gives a more detailed view of our NICAM receiver. The crystal-controlled frequencies have been carefully selected to minimize external components. This extremely flexible system can be controlled by either a microcomputer (via the I²C-bus) or by direct access to the IC pins.

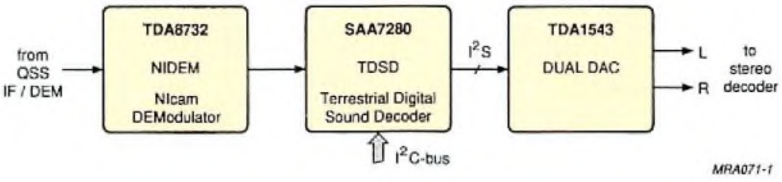

Fig.2 NICAM receiver chip set

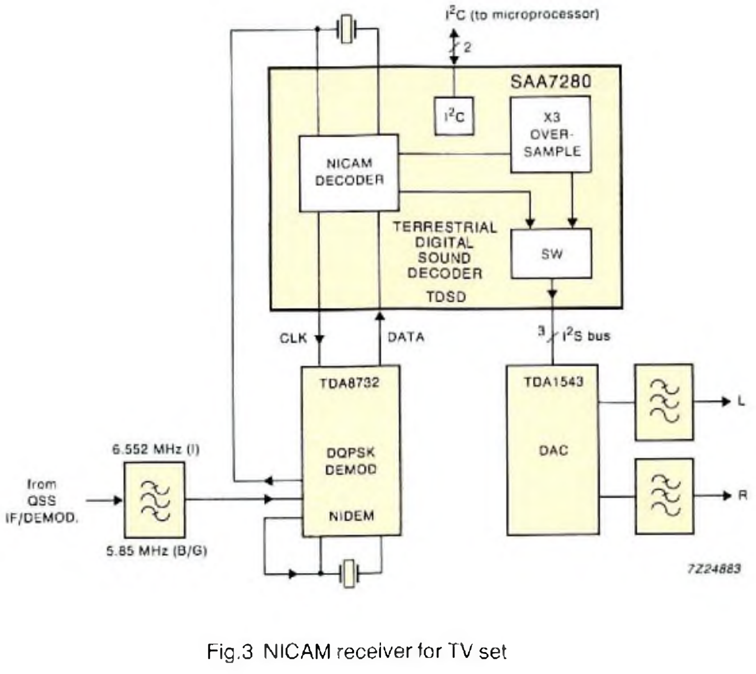

Fig.3 NICAM receiver for TV set

Detailed IC information

TDA8732 NICAM-728 demodulator (NIDEM)

The TDA8732 is a dedicated bipolar IC providing a DQPSK (Differential Quadrature Phase-Shift Keying) demodulator for the NICAM 728 system. Available in a 20-pin DIL package, this IC interfaces with NICAM decoders and provides data synchronized to a 728 kHz clock. The TDA8732 contains:

- a quadrature demodulator based on a costas-loop which uses a single-pin crystal oscillator in the VCO
- a carrier-phase recovery PLL to synchronize the sine and cosine reference carrier signals for quadrature demodulation
- a bit-rate clock recovery PLL to synchronize the 728 kHz clock generated by the SAA7280 (or an internal 728 kHz clock provided for use with other decoders) with the input data rate
- a differential decoder with parallel to serial converter.

Features of the TDA8732 include:

- limiting amplifier for QPSK input
- operation with PAL-B, -G and -I standards
- crystal-controlled bit-rate clock recovery
- 5 V supplies to analog and digital circuitry.

SAA7280 Terrestrial digital sound decoder (TDSD)

The SAA7280 is a CMOS IC in a 28-pin DIL package that performs all the digital decoding functions for the NICAM 728 system. The demodulated signal taken from the TDA8732, is decoded, checked for errors, formatted and then fed to the dual DAC via a selectable sound bus. Because of the architecture used (carefully chosen reference oscillator frequency of 17.472 MHz and only two PLLs), this chip requires the minimum of peripheral components, and a 3 × oversampling filter ensures that minimum analog filtering is required. Features include:

- full EBU NICAM 728 specification
- control via I^2C-bus or IC pins
- 3 × digital oversampling filter (selectable)
- seven sample interpolator for erroneous samples
- on-board RAM for de-interleaving and 10 to 14-bit word expansion
- I^2S output format
- automatic decoding and output configuration, depending upon transmission:
  - digital stereo
  - digital mono and data
  - independent digital mono signals.

TDA1543 dual DAC

The TDA1543 is a 16-bit digital-to-analog converter in an 8-pin DIL package. Designed as an economy version DAC, for hi-fi CD players and digital cassette recorders, it requires no peripheral components. Features include:

- low distortion
- single 5 V power supply
- fast-settling output current (no deglitcher required)
- I^2S input format
- 4 × oversampling possible.

Product note

Visible-wavelength laser diodes and collimator pens

The visible-wavelength laser diode (type CQL80) is the latest development in Philips Components' ever-expanding range of optoelectronic products. Emitting red light of 675 nm wavelength, this semiconductor laser can replace the Helium-Neon gas laser in many applications, having several distinct advantages over the latter:

- low power consumption
- direct modulation
- rugged construction
- lightweight and small-size
- high reliability
- high efficiency.

And where accurate control of beam parameters is needed, we'll supply our visible-wavelength laser diode as a collimator pen (type CQL90). The pen, with integrated diode and optics, is made from thermally-matched materials to ensure optical precision over a wide temperature range.

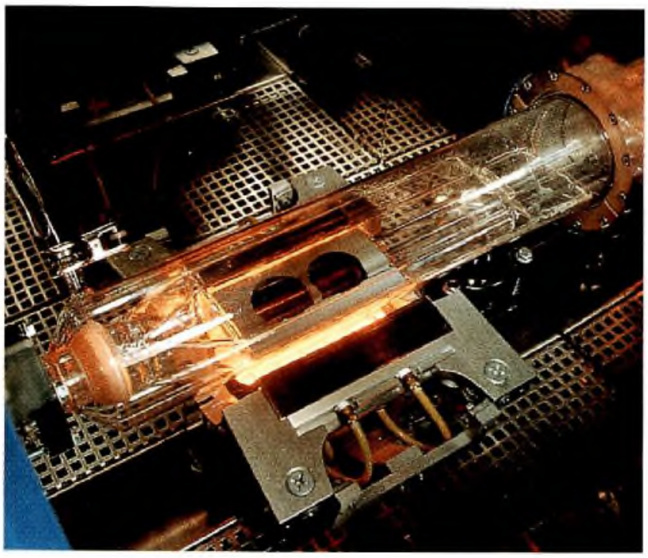

Fig.1 MOVPE reactor-cell – excellent process control guarantees laser-diode uniformity, reliability and performance

The laser diode is fabricated using Metal-Organic Vapour-Phase Epitaxy, MOVPE (see Fig.1), which offers excellent control over device structure and consequently ensures that the laser performs reliably and exactly to specification.

APPLICATIONS AND FUTURE DEVELOPMENTS

Visible lasers are ideal for:

- barcode readers
- non-contact measurement instruments
- target marking/pointers
- laser printers.

What's more, their small size and low-voltage supply mean they can be used in portable instruments and new 'field' applications.

Compared with IR lasers, the shorter-wavelength light from a visible laser makes higher density optical recording possible. And the development of new materials sensitive to visible light means visible lasers could be used in high-speed laser printers.

Our visible laser research programme is one of continuous advancement, focusing on:

- shorter wavelength lasers (in January 1990 we announced the world's first CW operated 633 nm laser diode)
- more symmetrical far fields (less beam-shaping)
- single longitudinal-mode types
- increased optical output power
- reduced threshold current.

NEW LASER STRUCTURE, SIMPLIFIED MANUFACTURE

We've developed a completely new structure for our visible laser diodes: the 'ridge-waveguide double heterostructure' (see Fig.2). The double heterostructure consists of an undoped GaInP active layer sandwiched between p- and n-AlGaInP cladding layers, grown by MOVPE on a n–GaAs substrate. On top, a p-GaInP inserted layer and a p–GaAs contacting layer are grown, and the ridge structure is formed by selective etching of the contacting layer. Metallization is the final stage in the process. The different contact properties of the etched and non-etched areas ensure lateral current-confinement. The ridge-confined current flows to the centre of the active layer, providing efficient pumping of the laser, which results in a relatively low threshold current.

Unlike other laser diode structures, our double heterostructure is manufactured by a one-step MOVPE process and a single etching stage. This produces diodes with unrivalled performance and reliability. Furthermore, our expertise in mass production with MOVPE enables us to fabricate a high wafer-to-wafer quality, yield and uniformity. Figure 3 illustrates the GaInP layer homogeneity of our one-step epitaxial process.

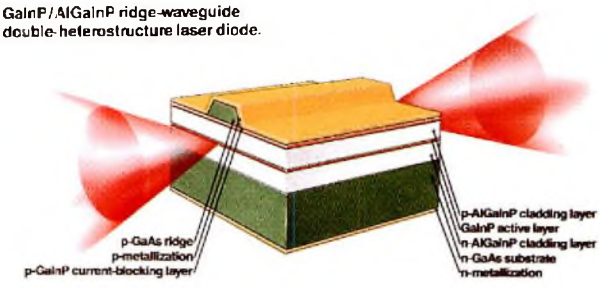

Fig.2 The ridge-waveguide double heterostructure

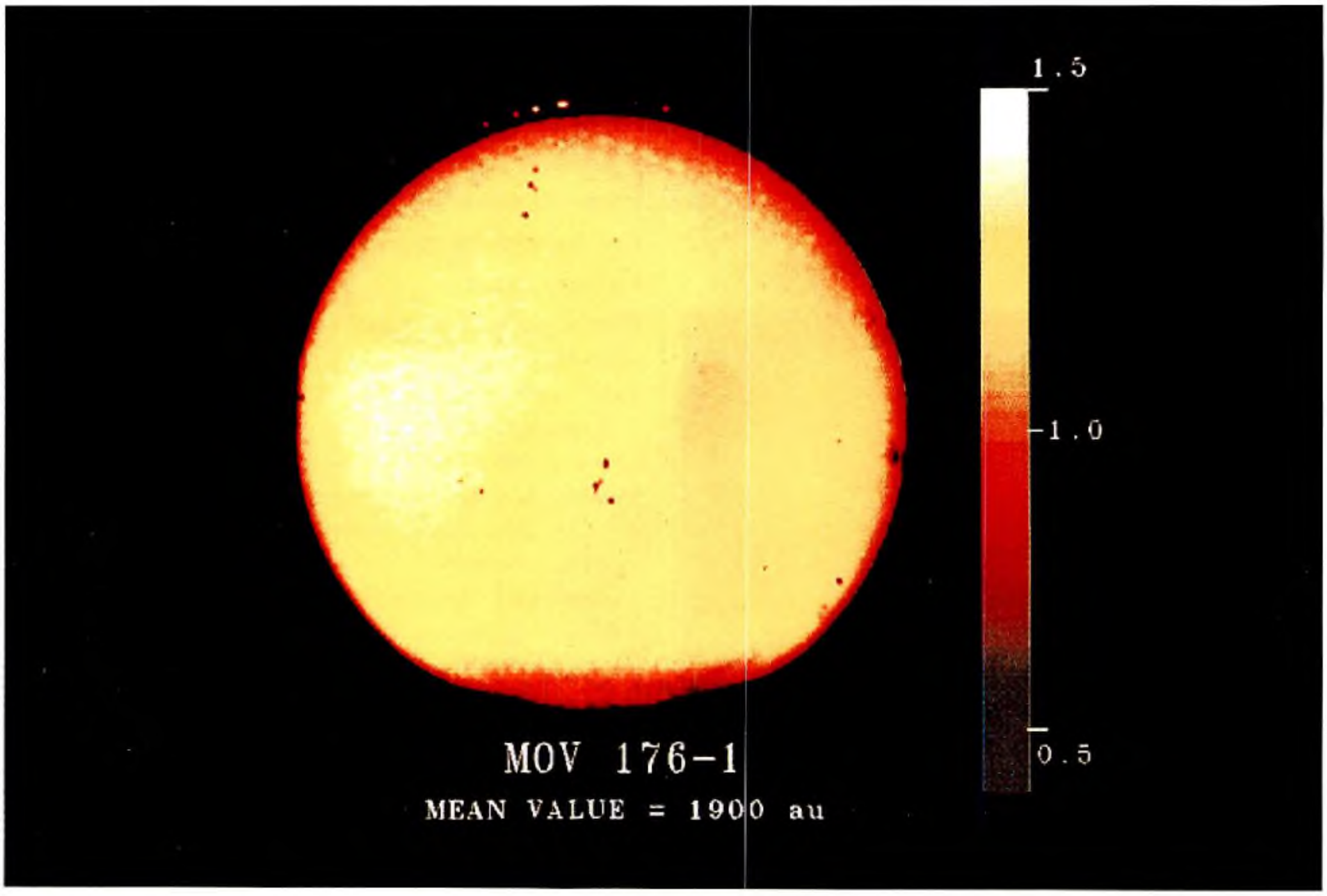

Fig.3 Photoluminescence map showing the relative luminous-intensity (measured at a wavelength of 670 nm) of a typical GaInP layer

Abstracts

LCD flat panels
LCD flat panels are high-definition, large area, dot-matrix displays for text or graphics. Their light weight, thin profile and low power consumption make them suitable for many applications, including lap-top computers and monitors. Because of their large pixel array, LCD flat panels of sufficient contrast cannot be made with conventional LCD technology. But, by using new Super Twisted Nematic (STN) LCD technology and exploiting the high birefringent properties of some liquid crystals, Philips now makes coloured or black-and-white displays with high contrast over a wide viewing angle. This article explains the operating principles of LCD flat panels, examines their drive requirements, and suggests several methods for interfacing them with a microprocessor or other data source.

3F3 Ferrite – at the core of advanced SMPS design
With the current trend in Switched Mode Power Supply (SMPS) design being directed towards much higher operating frequencies, size reduction has generally been limited by the transformer. The SMPS is, therefore, the ideal application to take full advantage of the high-frequency, low-loss characteristics of 3F3 power ferrite. A comparison of 3F3 with two older ferrites, 3C8 and its derivative 3C85, verifies that SMPSs can be made much smaller when using 3F3 ferrite as the transformer core. All losses are reduced across the entire frequency range (but most markedly above 400 kHz), enabling significant reductions in core volume while still maintaining the desired power throughput. And because of the high frequency, the output choke and capacitor can be made up to 90% smaller – resulting in excellent smoothing of ripple current.

EFD – for low profile DC-DC converters
Economic Flat Design (EFD) power transformers offer a significant advance in circuit miniaturization. One of their many application areas is in DC-DC converters where the height of the transformer is limited. The EFD range consist of assemblies for building transformers with a maximum finished height of 8 mm, 10 mm, or 12.5 mm. And when using Philips 3F3 power ferrite, throughput power-densities, related to transformer volume, range between 10 and 20 W/cm^3. This means that every transformer based on the EFD range has, with the same magnetic volume, a lower building height than any other existing low-profile design on the market today.

Controller Area Network (CAN) components
To ensure the optimum overall performance of electronically-controlled systems in a motor vehicle, a well-defined communication protocol is essential. Accepted by car makers and component suppliers alike, CAN is a de facto standard protocol specifically designed for the automotive environment. This article describes CAN's flexibility as a modular communication system and its unique automatic error-handling capability. It also details the host of CAN hardware, software and application support that Philips supplies.

SCC66470 Video and System Controller...
... replaces up to 30 ICs in display systems
The SCC66470 is the first fully-integrated SCC680XX/90CXXX-bus compatible Video and System Controller (VSC) for fully bit-mapped video display oriented systems. With a resolution of up to 768 by 560 pixels, it allows low-cost implementation of user-friendly man/machine interfaces. It uses advanced CMOS technology to integrate all the glue logic for a high-performance colour display interface, thereby replacing about 30 ICs and reducing the number of components required by 75%. The VSC reduces the cost of constructing icon/graphics-based interfaces to a level that now allows them to be incorporated in smaller systems such as PCs, intelligent colour monitors, videotex terminals, compact disc interactive (CD-I) systems, industrial man/machine interfaces and process control systems.

Short-wavelength semiconductor lasers for fibre-optic communication systems
Optical communication channels offer reliable and cost-effective signal transmission links that are capable of extremely high data rates. Philips semiconductor lasers and PIN-diode receivers, coupled through low-loss fibre-optic cables, are already used in a wide range of applications. Philips have also developed a versatile, low-cost receptacle that matches all connectors currently used in the fibre-optic industry. This article outlines the basic principles of optical fibre transmission, examines the behaviour of light in a fibre, and presents typical output characteristics of receptacle connectors, with both index-guided and gain-guided short-wavelength semiconductor lasers.

ICs for satellite TV reception
With the advent of medium power direct broadcast satellites (DBS) like Astra 1A, allowing the size of the receiving dishes to be reduced, the interest in DBS TV reception has grown rapidly. This article describes a set of ICs for building a high-performance DBS TV receiver indoor unit. The unit comprises a tuner/FM demodulator section and a sound and vision processing section that can decode MAC (CMAC, DMAC and D2MAC) signals. Also available is a comprehensive range of decoder ICs for PAL, SECAM and NTSC signals.

ICs for NICAM 728 digital sound in TV sets
NICAM 728 has recently been adopted as the European standard system for broadcasting digital TV sound and is rapidly gaining popularity throughout the rest of the world. Offering two digital sound channels, plus an analog sound channel for compatibility with current TV sound transmission systems, NICAM produces sound quality comparable to that of a compact disc player. Furthermore, it can be used for dual- or triple-language broadcasting. This article describes the Philips NICAM receiver which comprises a highly-integrated, high-quality, low-price chip-set with many features and options for TV and video recorder manufacturers.

LCD-Anzeigenmodule
LCD-Anzeigenmodule sind hochauflösende, großflächige Punktmatrix-Anzeigen zur Wiedergabe von Text und Grafik. Durch ihr geringes Gewicht, ihre flache Bauweise und ihre niedrige Leistungsaufnahme bieten sie vielfältige Einsatzmöglichkeiten – auch bei Laptop-Computern und Monitoren. Wegen des großen Pixelfeldes reicht die herkömmliche LCD-Technik nicht aus, um LCD-Module mit befriedigendem Kontrastverhalten herzustellen. Mit der neuen Supertwisted Nematic (STN)-Technik für LCDs nutzt Philips die starken Doppelbrechungs-Eigenschaften einiger Flüssigkristalle, mit denen sich sowohl Farb- als auch Schwarzweiß-Displays mit hohem Kontrast und großem nutzbaren Blickwinkel realisieren lassen. Dieser Artikel beschreibt die Funktionsweise und Ansteuerung von LCD-Displays; außerdem werden Vorschläge für Interface-Verbindungen zu einem Mikroprozessor oder zu anderen Datenquellen gemacht.

3F3-Ferrit – das Kernmaterial für moderne Schaltnetzteile
Bei der Entwicklung von Schaltnetzteilen (SMPS) geht man zur Zeit mehr und mehr zu höheren Betriebsfrequenzen über; jedoch ist bisher eine weitere Miniaturisierung wegen der Transformatoren nicht möglich gewesen. Die 3F3-Leistungsferrite können aufgrund der geringen Leistungsverluste bei höheren Frequenzen arbeiten und eignen sich daher ideal für den Einsatz in Schaltnetzteilen. Ein Vergleich mit zwei früher entwickelten Ferriten, dem 3C8 und seiner Weiterentwicklung, dem 3C85, zeigt deutlich, daß Schaltnetzteile mit Transformatorkernen aus 3F3-Ferriten wesentlich kleiner gebaut werden können. Über den gesamten Frequenzbereich (speziell aber bei Frequenzen über 400 kHz) treten deutlich kleinere Verluste auf, d.h., bei gleichem Leistungsdurchsatz ergibt sich eine beträchtliche Verringerung des Kernvolumens. Und weil die Frequenz eben sehr hoch ist, können um bis zu 90% kleinere Speicherdrosseln und Ausgangskondensatoren eingesetzt werden, die den Strom hervorragend glätten.

EFD-Ferritkerne für Gleichspannungswandler in Flachbauweise
Leistungstransformatoren mit EFD-Kernen (Economic Flat Design) können die Schaltungsminiaturisierung weiter vorantreiben. Eine der vielen Anwendungsmöglichkeiten sind Gleichspannungswandler, bei denen die Transformatorhöhe bestimmte Grenzen nicht überschreiten darf. Mit der EFD-Baureihe kommen Bauteile zum Einsatz, die maximale Einbauhöhen von 8 mm, 10 mm oder 12.5 mm ermöglichen. Bei Verwendung der 3F3-Leistungsferrite von Philips läßt sich damit ein Leistungsdruchsatz zwischen 10 und 20 W/cm^3 (bezogen auf das Transformatorvolumen) erzielen. Transformatoren mit EFD-Kernen zeichnen sich also gegenüber allen anderen heute erhältlichen Transformatoren in Flachbauweise bei gleichem magnetischen Volumen durch eine wesentlich geringere Einbauhöhe aus.

Bauelemente für Controller Area Networks (CAN)

Vor allem in der Automobiltechnik muß die optimale Funktion und Abstimmung aller elektronisch gesteuerten Systeme ständig gewährleistet sein. Dazu ist ein genau definiertes Kommunikationsprotokoll erforderlich. Mit CAN steht ein speziell für die Automobiltechnik entwickeltes Protokoll zur Verfügung, das sich bei Kfz-Herstellern und deren Bauteilzulieferern gleichermaßen als Quasi-Industriestandard durchgesetzt hat. Im vorliegenden Beitrag wird beschrieben, welche Flexibilität CAN als modulares Kommunikationssystem besitzt und welche einzigartigen Möglichkeiten der automatischen Fehlerbearbeitung die CAN-Software bietet. Darüber hinaus wird im Detail erläutert, welche Hardware-, Software- und Applikationsunterstützung Philips auf dem CAN-Sektor anbietet.

Video- und System-Controller SCC66470 ...
... ersetzt bis zu 30 ICs in Display-Systemen

Der SCC66470 ist der erste vollintegrierte SCC680XX/90CXXX-Bus-kompatible Video- und System-Controller (VSC) für Video-Display-Systeme mit bit-mapped Grafik. Mit einer maximalen Auflösung von 768 x 560 Bildpunkten ermöglicht er die kostengünstige Implementierung bedienerfreundlicher Mensch/Maschine-Schnittstellen. Der in CMOS-Technologie gefertigte Controller enthält die gesamte "glue logic" für ein leistungsfähiges Farbdisplay-Interface und ersetzt damit bis zu 30 ICs. Auf diese Weise lassen sich bis zu 75% der Bauelemente einsparen. Mit dem Video- und System-Controller SCC66470 sind die Kosten für Symbol- bzw. Grafik-Schnittstellen soweit reduzierbar, daß nunmehr auch eine Einfügung in kleinere Systeme möglich wird, z.B. in PCs, intelligente Farbmonitore, Btx-Terminals, CD-I-Systeme (CD-Interactive), industrielle Mensch/ Maschine-Schnittstellen sowie in Prozeßleitsysteme.

Kurzwellen-Halbleiter-Laser für Glasfaser-Kommunikationssysteme

Optische Kommunikationskanäle bieten den Vorteil zuverlässiger und kostengünstiger Signalübertragungswege bei außerordentlich hohen Datenübertragungsraten. Philips Halbleiterlaser, die als Sendeelemente über verlustarme Glasfaserkabel mit PIN-Dioden als Empfänger gekoppelt sind, werden bereits in vielfältigen Applikationen genutzt. Darüber hinaus hat Philips einen kostengünstigen Receptacle (Übergang) für alle zur Zeit in der Glasfaser-Industrie verwendeten Verbindungselemente entwickelt. Dieser Artikel beschreibt die Grundlagen der Signalübertragung mit Glasfaserkabeln, erläutert die Ausbreitung des Lichts im Inneren der Faser und zeigt die typischen Ausgangs-Kenndaten der Receptacles bei Verwendung von index- und verstärkungsgeführten kurzwelligen Halbleiterlasern.

ICs für Satellitenfernsehen

Mit der Betriebsaufnahme direktstrahlender Fernsehsatelliten (Direct Broadcast Satellites, DBS) der mittleren Leistungsklasse – z.B. des Astra 1A – hat das Interesse am Satellitenfernseh-Direktempfang schnell zugenommen, da diese Medium Power-Satelliten den Einsatz von kleineren Parabolantennen erlauben. Dieser Beitrag beschreibt einen IC-Satz für den Aufbau einer leistungsfähigen Satellitenfernseh-Empfangseinheit für Indoor-Betrieb. Diese Empfangseinheit besteht aus einem Tuner/FM-Demodulator-Teil und einem Block für die Bild- und Tonsignalverarbeitung, der alle gängigen MAC-Signale decodieren kann (CMAC, DMAC und D2MAC). Darüber hinaus steht für die Decodierung von PAL-, SECAM- und NTSC-Signalen eine vollständige Reihe von ICs zur Verfügung.

ICs für digitale Tontechnik mit NICAM 728 im TV-Bereich

Erst vor relativ kurzer Zeit hat sich in der digitalen Tontechnik für den TV-Bereich NICAM 728 als europäischer Standard durchsetzen können; weltweit ist ebenfalls eine rasch wachsende Popularität dieses Systems zu verzeichnen. NICAM arbeitet mit zwei digitalen Tonkanälen sowie einem weiteren analogen Kanal, mit dem das System zur konventionellen TV-Tontechnik kompatibel bleibt. Das Ergebnis ist eine Klangqualität, die mit der eines CD-Spielers vergleichbar ist. Darüber hinaus sind Übertragungen in zwei oder drei verschiedenen Sprachen möglich. In diesem Artikel wird der Philips NICAM Receiver beschrieben; er arbeitet u.a. mit einem kostengünstigen, hochintegrierten Qualitäts-Chip-Set, dessen Vielseitigkeit und dessen Erweiterungsmöglichkeiten ihn für die TV- und Videorecorder-Industrie interessant machen.

Panneaux plats LCD

Les panneaux plats LCD sont des écrans haute définition, à grande surface et à affichage par points pour textes ou graphiques. Leur poids léger, leur profil mince et leur faible puissance absorbée conviennent à de nombreuses applications, y compris les ordinateurs portables et les moniteurs. Du fait de leur nombre important de pixels, les panneaux plats LCD à contraste suffisant ne peuvent être réalisés à partir de la technologie LCD conventionnelle. Toutefois, grâce à la nouvelle technologie cristaux liquides Super Twisted Nematic (STN) et à l'exploitation des propriétés hautement réfringentes de certains cristaux liquides, Philips produit à présent des écrans couleur ou en noir et blanc dotés d'un contraste élevé sur un large angle de visée. Cet article expose les principes de fonctionnement des panneaux plats LCD, examine leurs exigences en matière de commande et propose diverses méthodes autorisant un interfaçage avec un microprocesseur ou une autre source de données.

Ferrite 3F3 – au coeur de la conception avancée des alimentations à découpage (SMPS)

Etant donné que la tendance actuelle en conception pour alimentations à découpage vise des fréquences de service beaucoup plus élevées, la réduction de dimension a généralement été limitée par le transformateur. De ce fait, les alimentations à découpage constituent l'application idéale permettant de tirer pleinement profit des caractéristiques de haute fréquence et de faible dissipation du ferrite 3F3. Si l'on compare le ferrite 3F3 avec deux autres ferrites plus anciens, le C38 et son derivé le 3C85, on constate que la dimension des alimentations à découpage peut être considérablement réduite si l'on utilise le ferrite 3F3 comme noyau du transformateur. Toutes les dissipations sont limitées dans toute la gamme de fréquences (mais principalement au-dessus de 400 kHz), ce qui autorise d'importantes diminutions du volume du noyau, tout en conservant la puissance désirée. La haute fréquence permet de réduire la bobine d'arrêt et le condensateur de sortie jusqu'à 90%, ce qui entraîne un excellent filtrage du courant ondulé.

EFD – pour convertisseurs continu-continu à profil bas

Les transformateurs de puissance EFD (Economic Flat Design) ont permis des progrès importants dans la miniaturisation des circuits. Les convertisseurs continu-continu, pour lesquels la hauteur du transformateur est limitée, constituent l'un des nombreux champs d'application. La gamme EFD comporte des ensembles permettant de réaliser des transformateurs d'une hauteur finale maximale de 8 mm, 10 mm ou 12,5 mm. Lorsque l'on utilise un ferrite 3F3 Philips, les puissances volumiques de débit liées au volume du transformateur s'échelonnent de 10 à 20 W/cm^3. Ce qui revient à dire que tous les transformateurs de la série EFD ont pour le même volume magnétique une hauteur moindre que toute autre conception à profil bas présente aujourd'hui sur le marché.

Composants CAN (Controller Area Network)

Afin d'assurer une performance optimale des systèmes de commande électronique d'un véhicule automobile, il est indispensable de recourir à un protocole de communication bien défini. Adopté tant par les fabricants d'automobiles que par les fournisseurs de composants, CAN est en fait un protocole standard spécialement conçu pour des applications automobile. Cet article traite de la souplesse du protocole CAN comme système de communication modulaire et de son pouvoir unique à traiter automatiquement les erreurs. Il examine également le système central du support matériel, logiciel et d'application CAN fourni par Philips.

Le contrôleur vidéo et système SCC66470 remplace jusqu'à 30 CI dans les systèmes d'affichage

Le SCC66470 est le premier contrôleur vidéo et système (VSC) entièrement intégré, compatible avec le bus SCC680XX/90CXXX, destiné à des systèmes à affichage vidéo totalement adressables par bit. Une résolution pouvant atteindre 768 par 560 pixels autorise la réalisation peu onéreuse d'interfaces homme/machine faciles à utiliser. Ce contrôleur s'appuie sur la technologie de pointe CMOS et intègre tous les circuits de liaison pour l'interface d'écran couleur à grande performance, remplaçant ainsi environ 30 CI et réduisant de 75% le nombre de composants requis. Le VSC réduit notablement les frais de production des interfaces utilisant des symboles graphiques ou des graphiques, ce qui permet de les intégrer à de plus petits systèmes, tels les ordinateurs personnels, les moniteurs couleur intelligents, les terminaux vidéotex, les systèmes CDI (disques compacts interactifs), les interfaces industrielles homme/machine ainsi que les systèmes de commande.

Lasers à semiconducteurs à courte longueur d'ondes pour systèmes de communication à fibres optiques

Les voies de transmission optiques offrent des chaînons efficaces et rentables pour la transmission de signaux pouvant fournir des débits extrêmement élevés. Les lasers à semiconducteurs de Philips ainsi que les récepteurs à diode PIN, reliés par câbles à fibres optiques à faible perte, sont déjà utilisés dans un large éventail d'applications. Philips a également mis au point une prise polyvalente à prix avantageux, adaptée à tous les connecteurs actuellement employés dans l'industrie de la fibre optique. Cet article donne un aperçu des principes de base de la transmission par fibres optiques, examine le comportement de la lumière dans une fibre et présente les caractéristiques de rendement propres aux connecteurs pour prise dans le cas de lasers à semiconducteurs à courte longueur d'ondes guidés par indice ou amplitude.

CI pour réception TV par satellite

Les satellites de diffusion directe (DBS) de moyenne puissance, tels Astra 1A, ont permis de réduire la taille des antennes de réception et ont entraîné un intérêt croissant pour la réception TV par satellite. Cet article décrit un jeu de CI permettant de mettre au point une unité intérieure pour récepteur TV satellite à haute performance. Cette unité comprend une section syntoniseur/démodulateur FM et une section de traitement du son et de l'image capable de décoder les signaux MAC (CMAC, DMAC et D2MAC). Une large gamme de CI pour décodeurs pour signaux PAL, SECAM et NTSC est également disponible.

CI pour son numérique NICAM 728 pour postes de télévision

Le NICAM 728 a été récemment adopté comme système standard européen pour la diffusion du son numérique TV et remporte un succès croissant dans le reste du monde. NICAM offre deux canaux pour le son numérique et un canal pour le son analogique assurant la compatibilité avec les systèmes actuels de transmission de son TV et produit une qualité de son comparable à celle d'un lecteur de disques compacts. Ce système peut en outre être utilisé pour des émissions en deux ou trois langues. Le présent article décrit le récepteur NICAM Philips comprenant un jeu de puces hautement intégré, de grande qualité et à prix avantageux, assorti de nombreuses fonctions et options pour fabricants de téléviseurs et de magnétoscopes.

Paneles planos LCD

Los paneles planos LCD son pantallas de gran área con una matriz de puntos de alta definición para textos y gráficas. Su peso ligero, estrecho perfil y bajo consumo de potencia los hace muy adecuados para múltiples aplicaciones, entre las que cabe citar: ordenadores portátiles y monitores. Debido a su amplio conjunto de elementos, con la tecnología convencional no se pueden fabricar paneles planos LCD con suficiente contraste. Pero mediante el nuevo procedimiento, denominado Super Twisted Nematic (STN), y aprovechando la elevada birrefringencia de algunos cristales líquidos, Philips fabrica actualmente pantallas coloreadas o en blanco y negro de elevado contraste sobre un amplio ángulo de visión. En el presente artículo se explican los principios de funcionamiento de los paneles planos LCD, se examinan sus requisitos de excitación y se proponen varios métodos para interconectarlos con microprocesadores u otras fuentes de datos.

Ferrita 3F3 - en el corazón del diseño moderno de SMPS

Con la actual tendencia en el diseño de fuentes de alimentación conmutadas (SMPS, Switches Mode Power Supply) orientadas hacia unas frecuencias de funcionamiento mucho más altas, por lo general el transformador ha sido el que ha limitado la reducción del tamaño. De ahí que la SMPS sea la aplicación ideal para beneficiarse al máximo de la alta frecuencia y bajas pérdidas que son las características de la potente ferrita 3F3. La comparación de la 3F3 con dos ferritas más antiguas, la 3C8 y su derivada, la 3C85, nos demuestra que las SMPSs pueden hacerse mucho menores utilizando la ferrita 3F3 como núcleo del transformador. Las pérdidas se reducen en todo el margen de frecuencias (pero más acusadamente por encima de los 400 kHz), pudiendo así lograr notables reducciones del volumen del núcleo sin detrimento de la potencia deseada. Y debido a la alta frecuencia, el choque y el condensador de salida pueden hacerse hasta un 90% menores, lo que da lugar a un excelente filtrado de la corriente de rizado.

EFD - para convertidores CC-CC de bajo perfil

Los transformadores de potencia EFD (Economic Flat Design) suponen un importante avance en la miniaturización de los circuitos. Uno de sus múltiples terrenos de aplicación está en los convertidores CC-CC, donde la altura del transformador está limitada. La gama EFD está constituida por unidades completas para la construcción de transformadores con una altura final máxima de 8 mm, 10 mm o 12,5 mm. Y cuando se utiliza la ferrita 3F3 de Philips, las densidades de potencia, referidas al volumen del transformador, oscilan entre 10 y 20 W/cm^3. Esto quiere decir que todo transformador basado en la gama EFD tiene, con el mismo volumen magnético, una altura de construcción más baja que cualquier otro diseño de bajo perfil existente hoy en día en el mercado.

Componentes de la CAN (red de la zona del controlador)

Para garantizar un funcionamiento global óptimo de los sistemas controlados electrónicamente en un vehículo motorizado, es indispensable un procedimiento de comunicación bien definido. Aceptado por los fabricantes de automóviles y proveedores de componentes, CAN es, de hecho, un procedimiento estándar concebido exprofeso para la industria del automóvil. El presente artículo nos explica la flexibilidad de CAN como sistema de comunicación modular, y de su capacidad única para la corrección automática de errores. Asimismo nos detalla la importancia del "hardware" y "software" de CAN y nos habla de la ayuda que Philips presta en su aplicación.

SCC66470 Controlador de video y sistema...

... reemplaza hasta 30 CIs en sistemas de visualización

El SCC66470 es el primer VSC (Video and System Controller) integrado en su totalidad, compatible con el bus SCC680XX/90CXXX para sistemas totalmente orientados a la visualización de video mediante mapa de bits. Con una resolución de hasta 768 por 560 elementos de imagen, permite efectuar interconexiones hombre/máquina de bajo costo y muy cómodas para el usuario. Utiliza la moderna tecnología CMOS para integrar toda la lógica consiguiendo de este modo un interfaz de pantalla de color de altas prestaciones, reemplazando unos 30 CIs y reduciendo un 75% el número de componentes necesarios. El VSC reduce los costos de la construcción de interfaces basadas en ventanas gráficas hasta un nivel que permite incorporarlas actualmente en sistemas más pequeños, por ejemplo: ordenadores personales, monitores color inteligentes, terminales de videotex, sistemas interactivos de disco compacto (CD-I), interfaces industriales hombre/máquina y sistemas para control de procesos.

Lasers semiconductores de onda corta para sistemas de comunicación por fibra óptica

Los canales de comunicación por fibra óptica ofrecen unos enlaces de transmisión de señales de funcionamiento seguro y de bajo costo, capaces de transmitir datos a una velocidad extremadamente alta. Los lasers semiconductores Philips y los receptores de diodo PIN, conectados por medio de cables de fibra óptica de bajas pérdidas, se vienen usando ya en un amplio terreno de aplicaciones. Philips también ha desarrollado un receptáculo versátil, de bajo costo, que acopla con todos los conectores utilizados normalmente en la industria de fibras ópticas. El presente artículo expone a grandes rasgos los principios básicos de la transmisión por fibra óptica, examina el comportamiento de la luz en una fibra y da a conocer las características de la potencia nominal de los conectores de receptáculo con lasers semiconductores de onda corta guiados por índice y por ganancia.

CIs para recepción de TV por satélite

Con la llegada de los satélites de media potencia para la difusión directa de TV, como es, por ejemplo, el Astra 1A, que permite una reducción del tamaño de las antenas parabólicas, el interés en la recepción de TV por DBS (Direct Broadcast Satellites) ha aumentado con gran rapidez. En el presente artículo se describe un juego de CIs para la fabricación de una unidad receptora de TV por DBS de gran rendimiento. Consta esta unidad de un sintonizador/demodulador de FM y una parte procesadora del sonido y de la imagen capaz de decodificar señales MAC (CMAC, DMAC y D2MAC). Existe así mismo una amplia gama de CIs decodificadores para señales PAL, SEMAM y NTSC.

CIs para sonido digital NICAM 728 en televisores

NICAM 728 ha sido recientemente adoptado como el sistema estándar europeo para la retransmisión del sonido digital en TV y está alcanzando con gran rapidez mucha popularidad en el resto del mundo. Por ofrecer dos canales de sonido digital, más uno de sonido analógico para compatibilidad con la transmisión del sonido en los sistemas de TV actuales, la calidad sonora lograda por NICAM puede compararse a la del reproductor de discos compactos. Además, sirve para la transmisión de programas bilingües o en tres idiomas. En el presente artículo se describe el receptor NICAM de Philips, consistente en un conjunto de chips de alta integración, de excelente calidad y bajo precio que ofrece muchas ventajas y posibilidades a los fabricantes de televisores y videograbadores.

Authors

Peter Chall was born in Offenburg, Germany, in 1950. After graduating in physics from the University of Düsseldorf in 1977, he was contracted to the Deutsche Forschungs Gemeinschaft for research into the use of lasers for plasma analysis. In 1983 he returned to the University of Düsseldorf and was awarded a PhD for this research. Subsequently he joined Telefunken for development work in laser modules. Since 1986 he has lead the applications group for short wavelength diode lasers at Philips Components, Nijmegen, The Netherlands.

Dave Slowgrove received his degree in engineering science (electronics) from the University of Warwick in 1982. After graduating, he joined Philips Components, Southampton, UK, as an application engineer working on pyroelectric infrared detectors. In 1986 he moved to the IC division as a member of the International Product Marketing Team for MOS ICs, with responsibility for digital-audio devices.

Horst Ey was born in Hanover, Germany, in 1951. He graduated in electrical engineering from the Technical University of Hanover, and after 2 years of supplementary studies, he received a masters degree in economic engineering at the Technical University of Braunschweig. He continued at Braunschweig with research into information theory and economic engineering, receiving a doctorate in 1984. In the same year, he joined the microcontroller design group at Philips Röhren- und Halbleiterwerke, Hamburg, and one year later he became the international product marketing manager for 8-bit microcontrollers.

Joost Verhoeks was born in Osterhout, The Netherlands, in 1957. He received a Master's degree in electronics from the University of Eindhoven in 1984, and joined Philips Components' Application Laboratories the same year, working on deflection systems for high scan-rate monitor systems. In 1987 he moved to the Business Unit ICs and is currently international marketing and sales manager for consumer ICs.

Dolf Ruigt was born in Sittard, The Netherlands, in 1958. After joining Philips in 1979, he continued his education at the Higher Technical School (HTS), Eindhoven where he graduated in electronic engineering in 1984. In 1988 he became an applications engineer for Philips LCDs at Heerlen, giving customer support for character modules and flat panels. He is now a project manager for LCD modules.

Wim Waanders was born in Zutphen, The Netherlands in 1943, and received a degree in experimental physics from the University of Utrecht in 1968. He joined Philips Components in 1970 and was involved in development work on neutron generator tubes, magnetic heads, ferrite components and piezo ceramics. Since 1986, he has been an application engineer for soft ferrites.

Jean-Claude Six was born in Lille, France, in 1947, and graduated in electronic engineering from the Institut Superieur d'Electronique du Nord (Lille) in 1970. In 1973 he joined RTC as an application engineer and from 1983 he managed the 68000 product-innovation and sales-support group at IMSC in Paris. In 1987 he joined the Strategic Product Marketing Group in Eindhoven, and is currently strategic product marketing manager for industrial products.

Philips Components – a worldwide company

Argentina: PHILIPS ARGENTINA S.A.,
Div. Philips Components, Vedia 3892, 1430 BUENOS AIRES,
Tel. (01) 541-4261.
Australia: PHILIPS COMPONENTS PTY Ltd, 11 Waltham Street,
ARTARMON, N.S.W. 2064, Tel. (02) 439 3322.
Austria: ÖSTERREICHISCHE PHILIPS INDUSTRIE G.m.b.H.,
UB Bauelemente, Triester Str. 64, 1101 WIEN,
Tel. (0222) 60 101-820.
Belgium: N.V PHILIPS PROF. SYSTEMS – Components Div.,
80 Rue Des Deux Gares, B-1070 BRUXELLES,
Tel. (02) 52 56 111.
Brazil: PHILIPS COMPONENTS (Active Devices)
Av. das Nacoes Unidas, 12495-SAO PAULO-SP,
CEP 04578, P.O. Box 7383, Tel. (011) 534-2211.
PHILIPS COMPONENTS (Passive Devices & Materials)
Av. Francisco Monteiro 702, RIBEIRAO PIRES-SP,
CEP 09400, Tel. (011) 459-8211.
Canada: PHILIPS ELECTRONICS LTD., Philips Components,
601 Milner Ave., SCARBOROUGH, Ontario, M1B 1M8,
Tel. (416) 292-5161.
(IC Products) SIGNETICS CANADA LTD.,
1 Eva Road, Suite 411, ETOBICOKE, Ontario, M9C 4Z5,
Tel. (416) 626-6676.
Chile: PHILIPS CHILENA S.A., Av. Santa Maria 0760, SANTIAGO,
Tel. (02) 77 38 16.
Colombia: IPRELENSO LTDA., Carrera 21 No. 56-17, BOGOTA,
D.E., P.O. Box 77621, Tel. (01) 249 76 24.
Denmark: PHILIPS COMPONENTS A/S, Prags Boulevard 80,
PB 1919, DK-2300 COPENHAGEN S, Tel. 01-54 11 33.
Finland: PHILIPS COMPONENTS, Sinikalliontie 3,
SF-2630 ESPOO, Tel. 358-0-50 261.
France: PHILIPS COMPOSANTS, 117 Quai du Président
Roosevelt, 92134 ISSY-LES-MOULINEAUX Cedex,
Tel. (01) 40 93 80 00.
Germany (Fed. Republic): PHILIPS COMPONENTS UB der
Phillips G.m.b.H., Valvo Haus, Burchardstrasse 19,
D-2 HAMBURG 1, Tel. (040) 3296-0.
Greece: PHILIPS HELLENIQUE S.A., Components Division,
No. 15, 25th March Street, GR 17778 TAVROS,
Tel. (01) 4894 339/4894 911.
Hong Kong: PHILIPS HONG KONG LTD., Components Div.,
15/F Philips Ind. Bldg., 24-28 Kung Yip St., KWAI CHUNG,
Tel. (0)-42 45 121.
India: PEICO ELECTRONICS & ELECTRICALS LTD.,
Components Dept., Band Box Building,
254-D Dr. Annie Besant Rd., BOMBAY – 400 025,
Tel. (022) 49 30 311/49 30 590.
Indonesia: P.T. PHILIPS-RALIN ELECTRONICS,
Components Div., Setiabudi II Building, 6th Fl.,
Jalan H.R. Rasuna Said (P.O. Box 223/KBY) Kuningan,
JAKARTA 12910, Tel. (021) 51 79 95.
Ireland: PHILIPS ELECTRONICS (IRELAND) LTD.,
Components Division, Newstead, Clonskeagh, DUBLIN 14,
Tel. (01) 69 33 55.
Italy: PHILIPS S.p.A., Philips Components,
Piazza IV Novembre 3, I-20124 MILANO, Tel. (02) 6752 1.
Japan: PHILIPS JAPAN LTD., Components Division,
Philips Bldg 13-37, Kohnan 2-chome, Minato-ku, TOKYO 108,
Tel. (03) 740-5028.
Korea (Republic of): PHILIPS ELECTRONICS (KOREA) LTD.
Components Division, Philips House, 260-199 Itaewon-dong,
Yongsan-ku, SEOUL, Tel. (02) 794-5011.
Malaysia: PHILIPS MALAYSIA SDN BHD, Components Div.,
3 Jalan SS15/2A SUBANG, 47500 PETALING JAYA,
Tel. (03) 73 45 511.
Mexico: PHILIPS COMPONENTS, Paseo Triunfo de la Republica,
No 215 Local 5, Cd Juarez CHI HUA HUA 32340 MEXICO
Tel. (16) 18-67-01/02.
Netherlands: PHILIPS NEDERLAND B.V., Marktgroep
Philips Components, Postbus 90050, 5600 PB EINDHOVEN,
Tel. (040) 78 37 49.
New Zealand: PHILIPS NEW ZEALAND LTD.,
Components Division, 110 Mt. Eden Road, C.P.O. Box 1041,
AUCKLAND, Tel. (09) 605-914.
Norway: NORSK A/S PHILIPS, Philips Components, Box 1,
Manglerud 0612, OSLO, Tel. (02) 68 02 00.
Pakistan: PHILIPS ELECTRICAL CO. OF PAKISTAN LTD.,
Philips Markaz, M.A. Jinnah Rd., KARACHI-3, Tel. (021) 72 57 72.
Peru: CADESA, Carretera Central 6.500, LIMA 3, Apartado 5612,
Tel. 51-14-35 00 59.
Philippines: PHILIPS INDUSTRIAL DEV. INC.,
2246 Pasong Tamo, P.O. Box 911, Makati Comm. Centre,
MAKATI-RIZAL 3116, Tel. (02) 868951 to 59.
Portugal: PHILIPS PORTUGUESA S.A.R.L., Av. Eng. Duarte
Pacheco 6, 1009 LISBOA Codex, Tel. (019) 6831 21.
Singapore: PHILIPS SINGAPORE, PTE LTD., Components Div.,
Lorong 1, Toa Payoh, SINGAPORE 1231, Tel. 35 02 000.
South Africa: S.A. PHILIPS PTY LTD., Components Division,
JOHANNESBURG 2000, P.O. Box 7430.
Spain: PHILIPS COMPONENTS, Balmes 22,
08007 BARCELONA, Tel. (03) 301 63 12.
Sweden: PHILIPS COMPONENTS, A.B., Tegeluddsvägen 1,
S-11584 STOCKHOLM, Tel. (0)8-78 21 000.
Switzerland: PHILIPS A.G., Components Dept.,
Allmendstrasse 140-142, CH-8027 ZÜRICH, Tel. (01) 488 22 11.
Taiwan: PHILIPS TAIWAN LTD., 581 Min Sheng East Road,
P.O. Box 22978, TAIPEI 10446, Taiwan, Tel. 886-2-5005899.
Thailand: PHILIPS ELECTRICAL CO. OF THAILAND LTD.,
283 Silom Road, P.0. Box 961, BANGKOK,
Tel. (02) 233-6330-9.
Turkey: TÜRK PHILIPS TICARET A.S., Philips Components,
Talatpasa Cad. No. 5, 80640 LEVENT/ISTANBUL,
Tel. (01) 179 27 70.
United Kingdom: PHILIPS COMPONENTS LTD.,
Mullard House, Torrington Place, LONDON WC1E 7HD,
Tel. (01) 580 6633.
United States: (Colour picture tubes – Monochrome & Colour
Display Tubes) PHILIPS DISPLAY COMPONENTS COMPANY,
1600 Huron Parkway, P.O. Box 963, ANN ARBOR,
Michigan 48106, Tel. 313/996-9400.
(IC Products) SIGNETICS CORPORATION, 811 East Arques
Avenue, SUNNYVALE, CA 94088-3409, Tel. (408) 991-2000.
(Passive Components, Discrete Semiconductors, Materials
and Professional Components) PHILIPS COMPONENTS,
Discrete Products Division, 2001 West Blue Heron Blvd.,
P.O. Box 10330, RIVIERA BEACH, Florida 33404,
Tel. (407) 881-3200.
Uruguay: PHILIPS COMPONENTS, Coronel Mora 433,
MONTEVIDEO, Tel. (02) 70-40 44.
Venezuela: MAGNETICA S.A., Calle 6, Ed. Las Tres Jotas,
CARACAS 1074A, App. Post. 78117, Tel. (02) 241 75 09.
Zimbabwe: PHILIPS ELECTRICAL (PVT) LTD.,
62 Mutare Road, HARARE, P.O. Box 994, Tel. 47211.

For all other countries apply to: Philips Components Division,
Strategic Accounts and International Sales, P.O. Box 218,
5600 MD EINDHOVEN, The Netherlands, Telex 35000 phtcnl,
Fax. 23753

AX80

Printed in The Netherlands 9398 705 60011

Philips Components

PHILIPS