# AM · FM · TV BROADCAST EQUIPMENT

**McCurdy Radio Industries, Inc.**

57 North Putnam Street • Danvers, Massachusetts 01923

(617) 744-6411

# McCurdy

## SS 7600 CUSTOM AUDIO CONSOLE

Capable of accommodating up to 20 mono or 12 stereo mixer channels all with slide attenuators.

Multiple input configurations available.

Capability of supplying multiple outputs for multi-track tape recorders.

Monitor feeds and cue system included as standard features.

Options include echo-send, equalization insert and sub-masters.

## SS 7500

8 Stereo mixer channels equipped with slide attenuators.

2 program channels each with VU meter, line key auxiliary and headset outputs.

Stereo Record/Audition Buss.

Remote line input switcher.

Stereo monitor channel with selectable External inputs.

Cue Systems with External input switching options include mono channels with VU meter, talk-back facility, compressors and equalizers.

## SS 7400

12 Mixer, 2 channel mono audio console.
2 selectable inputs per mixer for a total of 24 inputs.

All input channels utilize slide attenuators and by selection of optional input amplifiers each channel can accommodate low, medium or high-level inputs.

The built-in cue system provides for auxiliary inputs as well as the internal functions.

Push-button selection on control room monitors and studio monitors are standard.

Options include mic. on/off relays, compressors and equalizers.

## SS 4386A

6 Mixer channels mono, all equipped with pre-amplifiers and slide attenuators.

All operating controls arranged for optimum separation combined with grouping of related functions.

A choice of 3-input amplifiers for different input level applications, feed a balanced mixer bus to eliminate noise pick-up within the console.

A self-contained 2 watt cue system is included and can be used to select any input by means of push-buttons.

## SS 4388A

8 mixer channels mono, all equipped with pre-amplifiers and rotary step attenuators.

2 Inputs per mixer channel with a choice of 3-Input amplifiers for microphone or high-level applications.

Balanced mixer bus.

Complete cue system including amplifier and speaker with full monitor control capability for feeding any McCurdy external monitor speaker.

Provision for optional console. Mounted recessed push-buttons for machine control functions.

## SS 4312

12 Mixer Channels Mono, all equipped with pre-amplifiers and rotary attenuators.

2 Program Channels, each with VU Meter and Line Keys.

2 Inputs per Mixer Channel, with a choice of 3-Input amplifiers for microphone, or high-level applications.

Channels 11 and 12 have additional remote inputs available.

Complete Cue system including amplifier and speaker.

# SS 7700

The SS 7700 series of television production and recording consoles is a logical extension to the McCurdy package approach to engineered systems.

Pre-engineering of the basic design within our production facility, assists the customer to easily determine from his requirements, both the general mechanical and electrical layout for his particular application. The design criteria of the SS 7700 series basic format allows for easy expansion to a maximum of 26 functional channels, which may consist of almost any mix of input channels, submasters and masters. McCurdy manufactured plug-in modules may be used in any or all of the functional channels. Space is available within the standard unit, for applications requiring complex fold-back, echo-send and monitor mix-down functions. An optional companion housing, styled to the basic console, is also available to accommodate the patching required for some applications. Therefore, the flexibility accorded the basic design by these features, allows the total panel layout to be human-engineered for maximum versatility and efficiency.

Functions available within each channel include:

| | |
|---|---|
| Echo-sends | Straight-line faders |
| Sensitivity | Solo and Cue busses |
| Phase reversal | Sub or Master Assign pushbuttons. |

A full range of auxiliary functions, such as remote controls, are available to ensure that the total design is completely integrated to the user's requirements.

McCURDY

McCURDY

The McCurdy package approach to the engineering of a system allows the user to easily determine the best selection of standard components to fulfill his requirements.

All aspects of the broadcast function from news booth to full TV or record production can be met with the minimum of interface between units. A full range of furniture allows for the integration of each part of the system into the most convenient working package.

Optional components including disc reproducers, reel tape housings and cartridge tape housings designed for instant operational accessability, combine with any of the consoles shown to fulfill the basic needs of the broadcaster.

Each system is fully pretested as a total unit and will meet or exceed all broadcast specifications.

Stereo package shown contains:
2-SS 3158 turntables, 1-SS 7500 console, 1-SA 10044 cartridge tape housing, 1-SA 10041 reel-tape housing & ITC tape equipment.

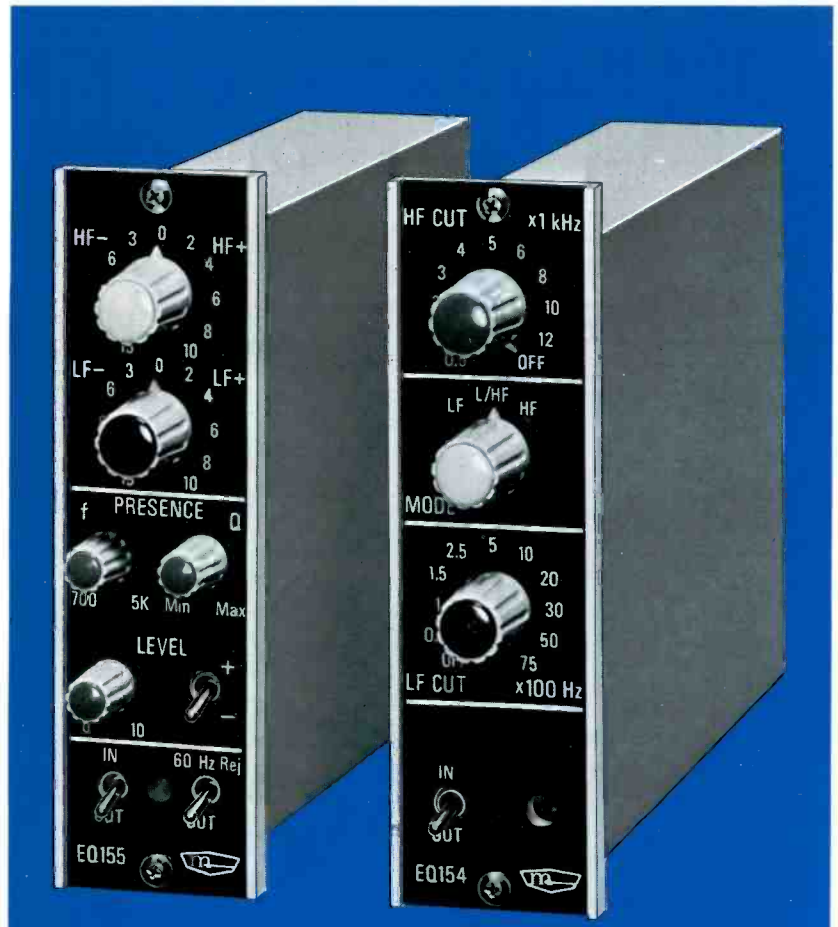


## EQ 155 VARIABLE EQUALIZER

An equalizer designed for operational ease with many new features in one package.

Styling and size compatible with standard fader dimensions.

+20 dBm output capability for maximum use of console headroom.

Unique variable Q presence equalization, with continuously variable level, Q and frequency controls.

Built-in positive/negative presence equalization.

Variable Q 60 Hz rejection.

Balanced inputs and outputs.

All curves algebraically add or subtract depending on settings.

## EQ 154 EFFECTS FILTER

A special effects equalizer designed for operational ease and compatibility with existing equipment.

+20 dBm input and output capability.

Transformerless balanced input and output using modern design concepts.

IN/OUT switch for instant comparison.

L. E. D. (light-emitting diode) insertion indicator.

Cut-off rate of 18 dB/octave.

## DA 503 AUDIO DISTRIBUTION SYSTEM

This system consists of six AT 249 Distribution Amplifiers and one PS 849 Power Supply in a single frame. Each amplifier provides six highly-isolated +8 dBm output splits. Full broadcast quality specifications.

## AT 264A MINI-CUE AMPLIFIER

The AT 264A is a compact, self-contained assembly specifically designed for low-power cueing applications. Especially suitable in providing speaker cue facilities for audio tape recorder/reproducer consoles. Provides 1.5 watts output.

# am-fm-tv broadcast audio equipment

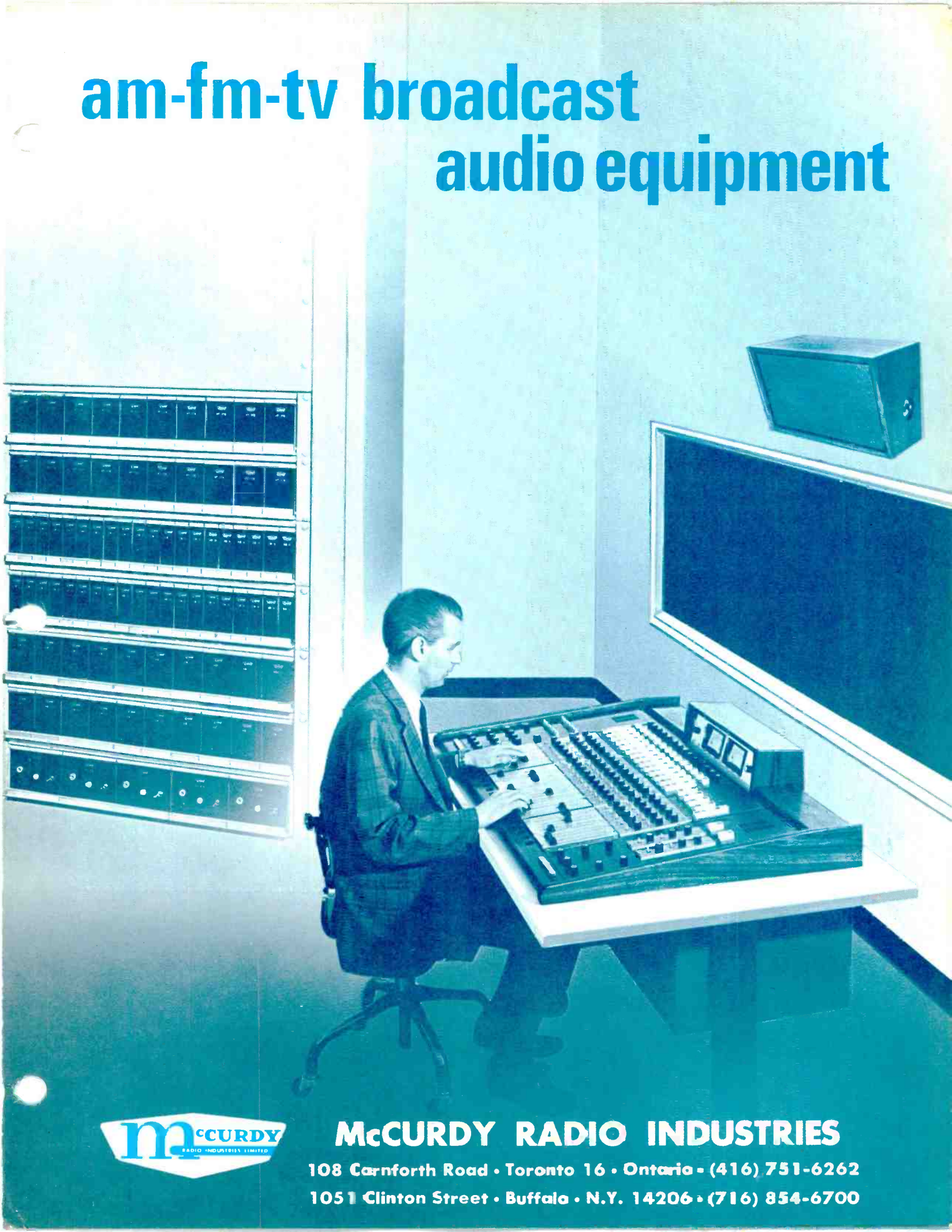

McCURDY RADIO INDUSTRIES

108 Carnforth Road • Toronto 16 • Ontario • (416) 751-6262

1051 Clinton Street • Buffalo • N.Y. 14206 • (716) 854-6700

# a complete broadcast audio line

McCURDY RADIO INDUSTRIES LIMITED

## SOLID-STATE

From Portable Equipment to complete TV Production Consoles, Intercoms, and Switchers, McCurdy offers quality – designed and built audio equipment for every commercial broadcast requirement.

# CONSOLES...

**SS4360 DUAL-CHANNEL STUDIO CONSOLE**
Accommodates 34 inputs selectable to 10 mixers. Full 10-watt monitoring. "Instant-select" cue-talkback system.

**SS4370 DUAL-CHANNEL STEREO STUDIO CONSOLE**
Accepts 28 stereo inputs to 8 mixers. Optional monaural channel. 10-watt Stereo Control Room monitor, with provision for Studio monitors. "Instant–select" cue-talkback system.

**PE2400 PORTABLE AUDIO CONSOLE**
Provides for 8 low-level inputs or 4 high and 4 low-level inputs, selectable to 4 mixing channels; battery or ac operation. Provides 110 dB gain, less than 0.5% harmonic distortion. Built-in test oscillator.

**SS4388 DESK-TOP AUDIO CONSOLE**
Ideal for News Booth or DJ areas. 8 mixers, each accepting one HL and one LL input. One program channel. Complete cue system. Monitor control and feed for external amplifier. Four unwired utility keys, with provision for four more, plus optional pushbuttons for control of turntables, tapes, etc.

**SS4386 DESK-TOP AUDIO CONSOLE**
Designed for News Booth or DJ areas. 6 mixers, using slide attenuators, each mixer accepting one LL and one HL input. Complete cue system. Monitor and PA feed.

**SS4395 DESK-TOP DUAL-CHANNEL AUDIO CONSOLE**
Similar to SS4386 except 6 to 12 mixers with optional equalizer insertion, two program channels, each with VU meter.

For nearly two decades, McCurdy Radio Industries has been a major supplier of broadcast audio equipment ranging from complete TV audio mixing consoles to the individual components which are used in such systems. McCurdy quality is manifest in performance, design features and attention to detail — appreciated by engineers who know the difference.

McCurdy is prepared to assist you with your requirements for complete studio equipment — standard or custom as well as to supply your needs for broadcast audio accessories.

# INTERCOMS and SWITCHERS

### CS7000 SERIES INTERCOM SYSTEM

A completely solid-state professional intercom system utilizing a high-reliability reed relay switching matrix. A single type of input amplifier accommodates carbon microphone, dynamic microphone, or line level; also features optional compressor module. Output amplifier supplies 2 watts to 8-, 150-, or 600-ohm lines. Standard input-output configurations are 10 x 10, 18 x 20, and 36 x 40. Custom systems may be engineered on request.

### SM8 and SM18 AUDIO SWITCHERS

Each Switching Module holds up to 8 relays to provide an 8 x 1 switcher in which any one or all 8 inputs may be selected to the output. Unique transistorized hold-cancel circuit increases versatility to permit numerous control configurations. Provision for pads to obtain additional isolation in the switching matrix.

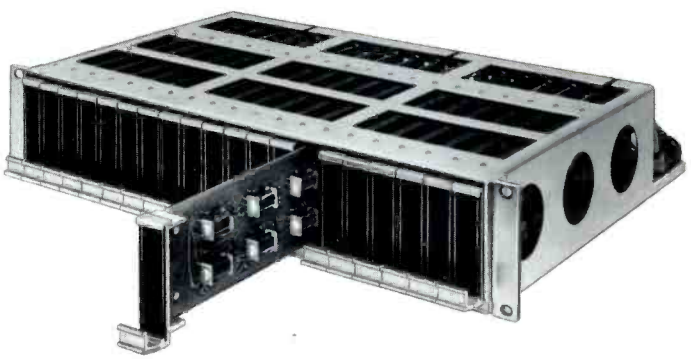


McCURDY RADIO INDUSTRIES

108 Carnforth Road • Toronto 16 • Ontario • (416) 751-6262

1051 Clinton Street • Buffalo • N.Y. 14206 • (716) 854-6700

# PRODUCTION CENTERS . . .

### SS5200 DESK-TOP TV AUDIO PRODUCTION CONSOLE

Provides complete audio production facilities for Radio or TV Studios. Up to 20 mixers (normally 14) with 3-position input selectors (center pos'n OFF), 4 subs, 2 program channels. Echo send, pre-listen, post-fade, and monitor feeds. Space for equalizers, compressors, and input sensitivity selectors.

### SS4475 TV AUDIO PRODUCTION CONSOLE

Features straight-line mixer attenuators on all operating program channels. Selects 30 mic lines and 7 high-level lines to 12 mixer channels, routed via 3 submaster channels to two output lines. Built-in selection of equalizers, echo mix and foldback. Three VU meters allow complete readout of all functions.

### SS4900 CUSTOM AUDIO PRODUCTION CONSOLE

A completely customized console designed to meet any resonable requirement regarding quantities of input channels, subs, and program channels. Normal configuration offers up to 24 input channels, 4 subs, and 2 to 4 program channels. Also includes echo send, pre-listen, post-fade, cue, and monitoring. Space for equalizers and compressors, plus input sensitivity selector on each input channel.

# PACKAGES and ACCESSORIES...

### SS4360/1/2/3 RADIO PRODUCTION PACKAGE

Pre-engineered, pre-cabled and pre-tested, a complete radio station control room for announcer operation or booth work. Stereo or monaural versions available. Completely modular in design: can be expanded from a simple 1-TT/1-Tape set-up to a system such as shown here. All machine controls readily accessible.

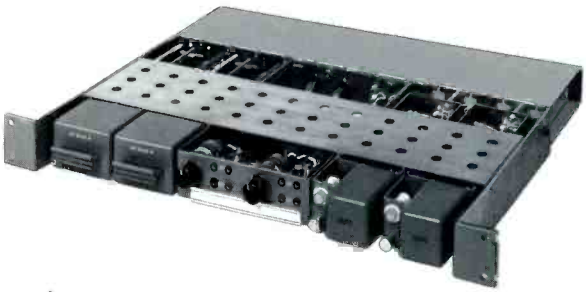

### DA501 DISTRIBUTION AMPLIFIER SYSTEM

Utilizes two AT242A Universal Audio Amplifiers, each with separate gain control and power supply. Each AT242A provides 4 or 8 output splits at +18 dBm. Isolation better than 32 dB.

### AT264 MINI-CUE AMPLIFIER

A compact, self-contained assembly specifically designed for low-power cueing applications. Especially suitable in providing speaker cue facilities for audio tape recorder/reproducer consoles. Where adequate preamplifier level is available, it may also be used as a turntable cue amplifier. Features integrated circuit.

### SS3152A PROFESSIONAL DISC REPRODUCER

Provides complete facilities for monophonic reproduction of monaural or stereo disc recordings. Completely self-contained with three-speed turntable, equalized preamplifier, audio cue switching, and power supply. Features a unique audio delay circuit that eliminates "wow" on start-up.
Available in SS3153A Stereo version.

### LSA608 and LSA609 SPEAKER/AMPLIFIER ASSEMBLIES

Two 10-watt speaker/amplifier assemblies ideal for monitoring applications. LSA608 is made for desk-top mounting; LSA609 has 15° reverse slope and is designed for wall-mounting.

# COMPONENTS...

### AT242A UNIVERSAL AUDIO AMPLIFIER

One-watt output capability plus high gain and extremely low input noise permit the AT242A to be used for low-level microphone mixing, intermediate booster, or program output amplifier applications. Ideal for use as a distribution amplifier, such as applied in the McCurdy DA501 and DA502. Gain strappable incrementally between 50 and 64 dB. Optional remote gain available.

### AM408A SOLID-STATE 10W MONITOR AMPLIFIER

Self-contained, silicon solid-state unit delivers 10 watts continuous sine-wave power over full audio spectrum with less than 0.5% harmonic or intermodulation distortion. Immune to overdrive and short-circuit failure. Remote gain control is optional.

### EQ150 VARIABLE EQUALIZER

One equalizer provides variable equalization in precise steps: 40 Hz, 100Hz, 3, 6, 10 & 15 kHz all in a single package. In-Out switch allows presetting for desired effect. Presence boost equalization included.

# SS 8400

# modular mono production console

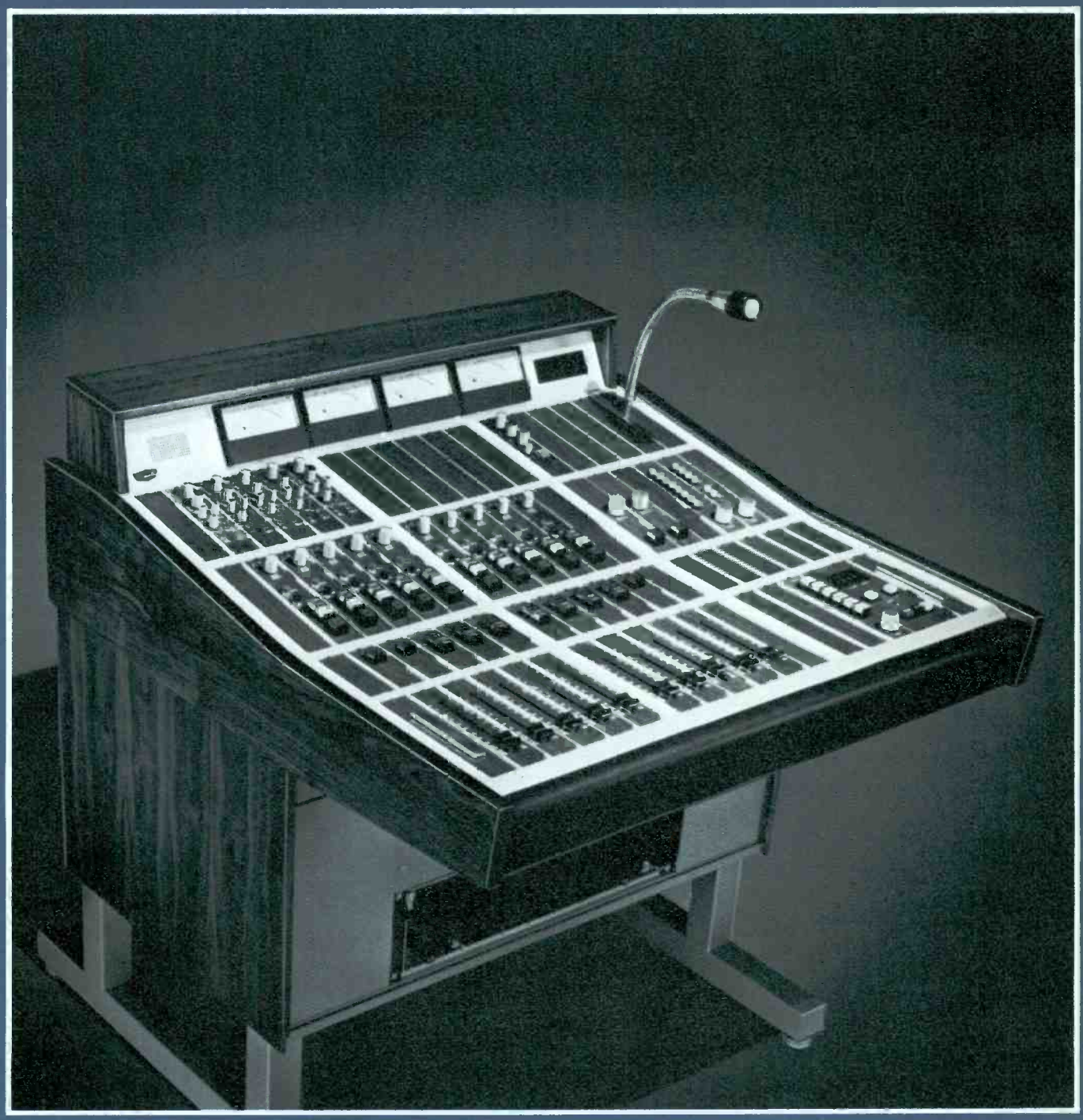

McCURDY

# standard equipment & options

The McCurdy SS8400 mono console is a fully modular, professional audio mixing unit. Standard features with available, additional options fulfill the most exacting requirements for 'On Air' use in AM radio facilities. The SS8400 console's capabilities provide the nucleus for total Broadcast Production Packages.

### Quality Features of the Series 8000 Module

a) Integrated circuit technology
b) Balanced input and output stages
c) Provision for insertion of "Audio Processing Equipment" – equalizers, compressor/limiters, etc.
d) SILENT! "Momentary Action" pushbutton for "channel-on" switching
e) Front panel plug-in capability
f) Complete compatability with other modules in the 8000 series, with available options suited to specific requirements

### Standard Equipment on the SS8400 Mono Console

- 12 input mixing channels, complete with A/B switching, allowing for 24 audio sources.
- Each mixer equipped with specially designed "conductive plastic" slide attenuator (fader).
- Cue switching provided with fader in maximum attenuator position, *and* front panel pushbutton to facilitate production procedures.
- Output from each input mixer is available to either program channel or both simultaneously.
- Input sensitivity switching (2 position), to suit specific mix requirements. Customer choice at time of purchase.
- 2 identical program output channels, each equipped with "channel-on" switching, rotary gain controls and VU meters.
- 2 monitor preamplifier and control systems, complete with 8 input selections.
- One cue/talkback system allowing 3-station communication.
- Extender module.

### Available Options for the SS8400 Mono Console

Provision is made for the insertion of:

1) Machine remote control modules
2) EQ 155 equalizers
3) CP 159 compressor
4) OT 157 multi-frequency oscillator
5) Foldback system
6) Echo-send and return
7) 'Solo' monitor feature
8) Real-time digital clock SA138A
9) Elapsed-time digital counter and control panel SA137A
10) Distribution amplifier systems

### Sensible Styling

The SS8400 mono console is housed within a one-piece welded steel enclosure for maximum shielding in high RF environments.

Completely free-standing, self-supporting console. Control panel hinges upward to facilitate service and routine test procedures.

Console end bells and VU meter housing are richly toned, hand-rubbed, oiled walnut.

Woodgrain finish on control panel surface, highlighted with engraved style strips.

Padded armrest adds to both the appearance and operating comfort of the console.

Ease of operation is assured with controls arranged in easily accessible, uncrowded groupings for related functions.

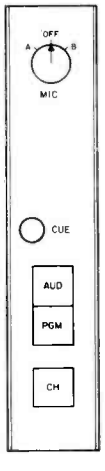


IM 8401-00-02

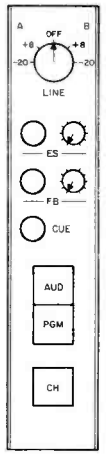


IM 8408-00-06

# facilities & options

## Series 8400 Mixer Module Options

| OPTIONS | 8401 | 8402 | 8403 | 8404 | 8405 | 8406 | 8407 | 8408 | 8409 | 8401-01 | 8402-01 | 8408-01 | 8409-01 |
|---|---|---|---|---|---|---|---|---|---|---|---|---|---|
| 02 | ● | | ● | | ● | | | | ● | ● | | | ● |
| 03 | | | | | | | | | ● | | | | ● |
| 04 | | | | | | | | | ● | | | | ● |
| 05 | | | | | | | | | ● | | | | ● |
| 06 | | ● | | ● | | ● | ● | ● | | | ● | ● | |
| 07 | | ● | | ● | | ● | ● | ● | | | ● | ● | |
| CHANNEL ON | ● | ● | ● | ● | ● | ● | ● | ● | ● | ● | ● | ● | ● |
| PROGRAM | ● | ● | ● | ● | ● | ● | ● | ● | ● | | | | |
| AUDITION | ● | ● | ● | ● | ● | ● | ● | ● | ● | | | | |
| CUE | ● | ● | ● | ● | ● | ● | ● | ● | ● | ● | ● | ● | ● |
| SOLO | | | ● | ● | ● | ● | ● | | | | | | |
| ECHO SEND | | | | | ● | ● | | ● | ● | | | ● | ● |
| FOLDBACK | | | | | | | ● | ● | ● | | | ● | ● |

## Series 8400 Input Options

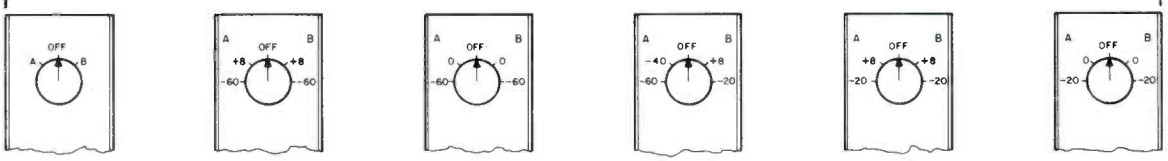


MIC. — 02

MIC./LINE — 03

MIC./LINE — 04

MIC./LINE — 05

LINE — 06

LINE — 07

## Series 8400 Output & Auxiliary Modules

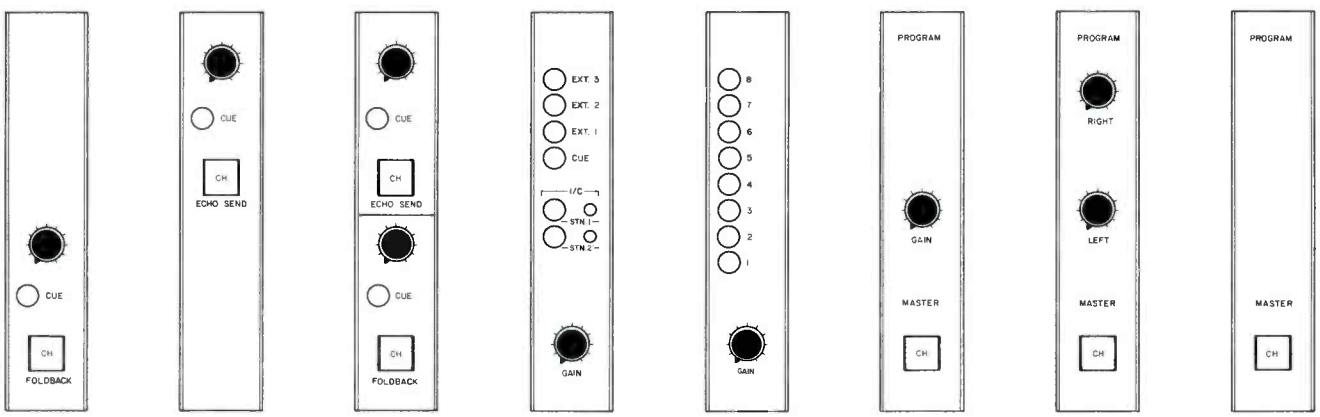


FM 8446 (MONO) — FOLOBACK MASTER

EM 8446 (MONO) — ECHO SEND MASTER

EFM 8446 (MONO) — FB/ES MASTER

CM 8441 — TALKBACK / CUE MODULE

MM 8431 (MONO) — MONITOR MODULE

PM 8421 / AUD 8421 (0dBm OUT)

PM 8423 / AUD 8423 (+8dBm OUT)

PM 8521 / AUD 8521 (0dBm OUT)

PM 8422 / AUD 8422

PROGRAM / AUDITION MODULES

# installation

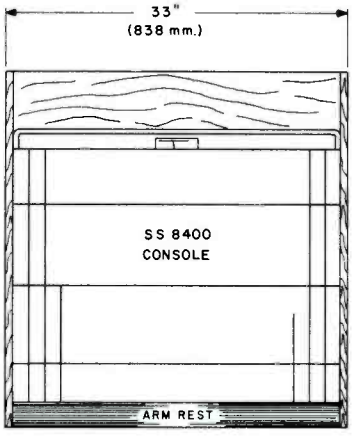


TOP

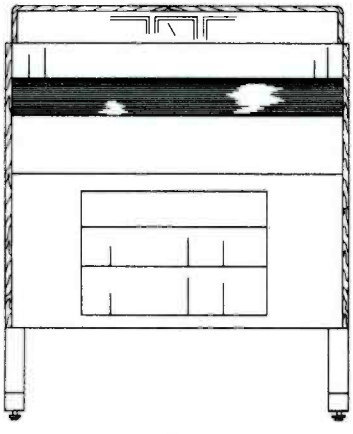

FRONT

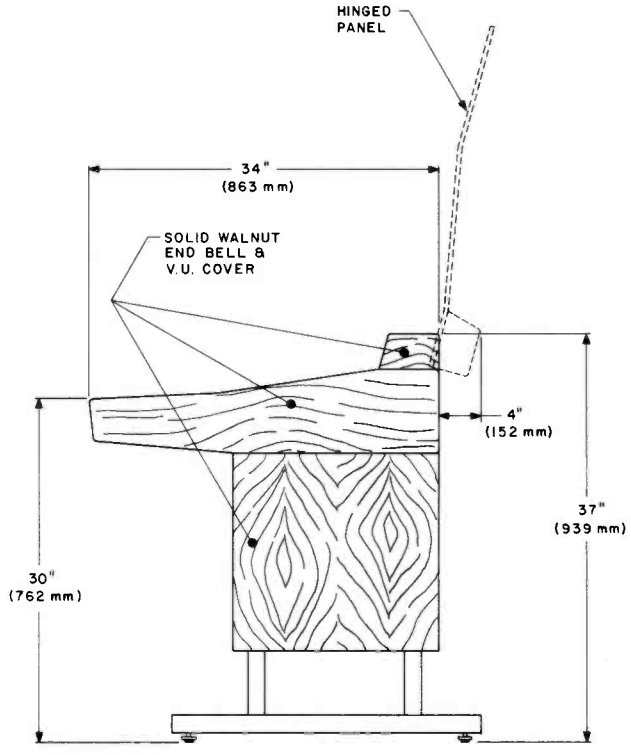


SIDE

*McCurdy Radio Industries reserves the right without notice to make such changes in equipment, design, specifications, or components, as progress in engineering or manufacturing techniques may warrant, to improve the performance of the product.*

Printed in Canada · SS8400 Console/Issue 2/12.76

**McCurdy Radio Industries Limited,**
**108 Carnforth Road, Toronto, Ontario M4A 2L4 (416) 751-6262 Telex: 06-963533**

**McCurdy Radio Industries Incorporated, TWX: 610-492-3219**
**1051 Clinton Street, Buffalo, N.Y. 14206 (716) 854-6700 Telex: 06-963533**

**U.S.A. East Coast Office,**
**Saddle River, N.J. P.O. Box 86, 07458 (201) 327-0750**

**SS8400 Mono Console**

# specifications

INPUT LEVEL: (nominal)
−60 dBm/150 for microphone select or as per options, switchable, 2 inputs.
For microphone input impedance at least 10 times source.
For high-level at least 10k Ohms.

OUTPUT LEVELS: (nominal)
+8 dBm/600 Ohms balanced
(PM8423 – Program)
0 dBm/600 Ohms balanced.
(PM8421 – Program)
– 10 dBm/600 Ohms balanced.
(MM8431)
Maximum 3 Watts/i Ohm, balanced/unbalanced, (CM 8441, cue)

GAIN: (Maximum ±1 dB)
Microphone/Program Module 84 dB.
Line/Program Module 44 dB.
Microphone/Program/Monitor 84 dB.
Line/Program/Monitor 44 dB.

FREQUENCY RESPONSE:
(30 Hz to 15 kHz)
Any input to program output ±0.5 dB.
typically ±0.25 dB.
Any input to monitor ±1 dB.
typically ±0.5 dB.

SIGNAL TO NOISE:
(10 Hz to 100 kHz)
Equivalent input noise −124 dBm for microphone channel (option 02), better than 78 dB below test level for line inputs (option 06). Test level is 10 dB above program.

DISTORTION: (THD)
(30 Hz to 15 kHz)
Any path less than 0.25% at test level (10 dB above program) typically less than 0.1%, at maximum dynamic range less than 0.5%.

CROSSTALK: (30 Hz to 15 kHz)
At least 60 dB below test level, when feeding −50 dBm into −60 dBm microphone input and measuring an unused channel with normal attenuator setting.

TRANSIENTS: (RMS)
Better than 60 dB below output (test level) when operating a relay or pushbutton.

POWER REQUIREMENT:
115 V ac, 60 Hz, 3 wire single phase, 50 Va (230 V ac, 50 Hz upon request).

AMBIENT TEMPERATURE:
0°C to +55°C (32°F to 131°F)

OVERALL DIMENSIONS:
Height: 36″
Width: 33.5″
Deep: 35″

**SS8400 Mono Console:**

Standard Compliment:

a) INPUT MODULES:
Total of twelve (12) consisting of:
IM8401-00-02 (Microphone) or
IM8402-00-06 (line +8, −20) or
IM8402-00-07 (line 0, −20)

b) OUTPUT MODULES:
Total of two (2) PM8423
+8 dBm, 4 split output
Option: PM8421
0 dBm output Mono

c) CUE MODULE:
CM8441 (one)

d) MONITOR MODULE:
MM8431 (two)

e) VU METERS:
Two (Program 1, audition).

# functional

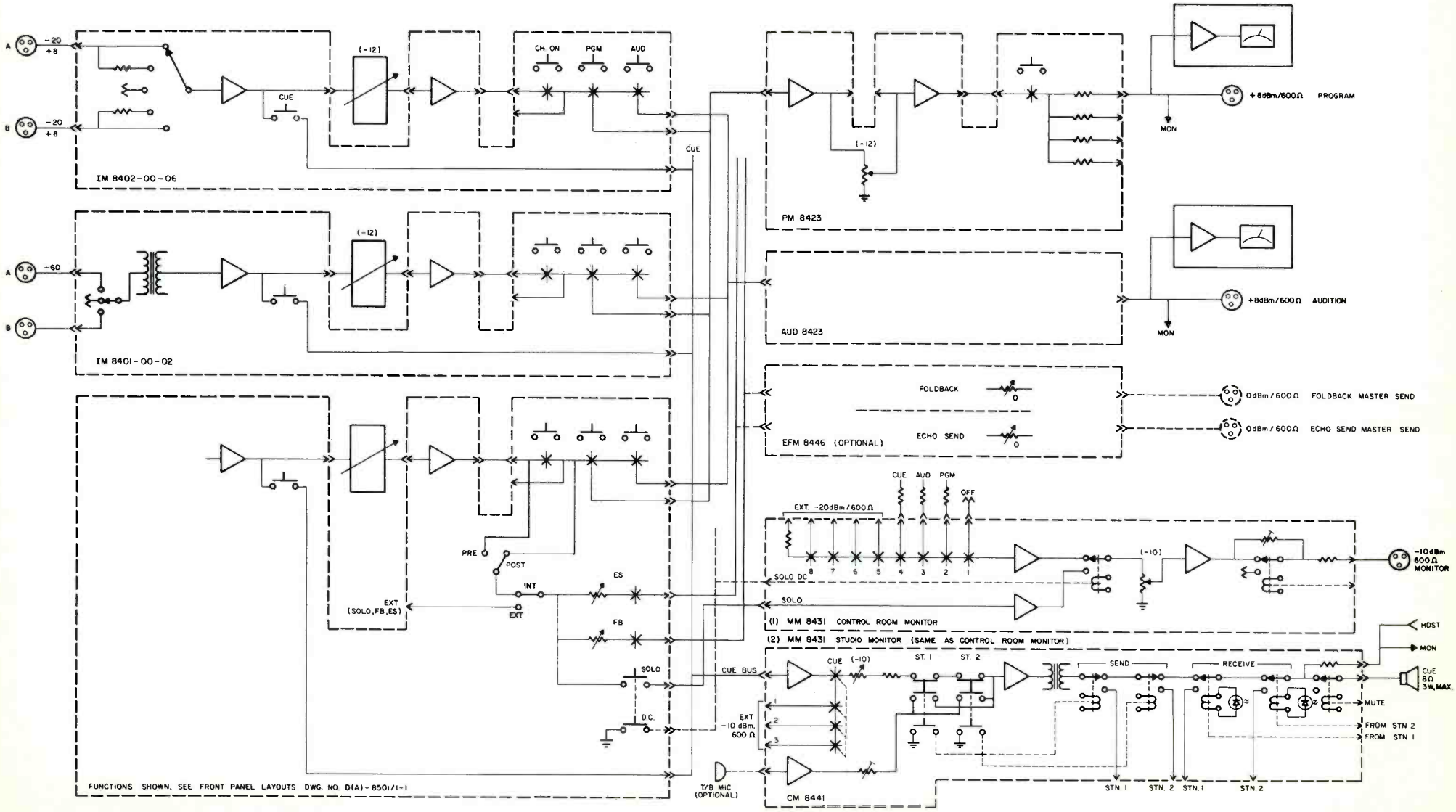
A
B
-20
+8
CUE
(-12)
CH ON
PGM
AUD
IM 8402-00-06
-60
IM 8401-00-02
PM 8423
+8dBm/600Ω PROGRAM
MON
AUD 8423
+8dBm/600Ω AUDITION
EFM 8446 (OPTIONAL)
FOLDBACK
ECHO SEND
0dBm/600Ω FOLDBACK MASTER SEND
0dBm/600Ω ECHO SEND MASTER SEND
PRE
POST
INT
EXT
EXT (SOLO,FB,ES)
ES
FB
SOLO
D.C.
CUE BUS
EXT -10 dBm, 600Ω
T/B MIC (OPTIONAL)
CM 8441
FUNCTIONS SHOWN, SEE FRONT PANEL LAYOUTS DWG. NO. D(A)-8501/1-1
CUE AUD PGM OFF
EXT -20dBm/600Ω
SOLO DC
SOLO
(1) MM 8431 CONTROL ROOM MONITOR
(2) MM 8431 STUDIO MONITOR (SAME AS CONTROL ROOM MONITOR)
-10dBm 600Ω MONITOR
ST. 1
ST. 2
SEND
RECEIVE
HOST
MON
CUE 8Ω 3W, MAX.
MUTE
FROM STN 2
FROM STN 1
STN. 1
STN. 2
STN. 1
STN. 2

# SS 8500

## modular stereo production console

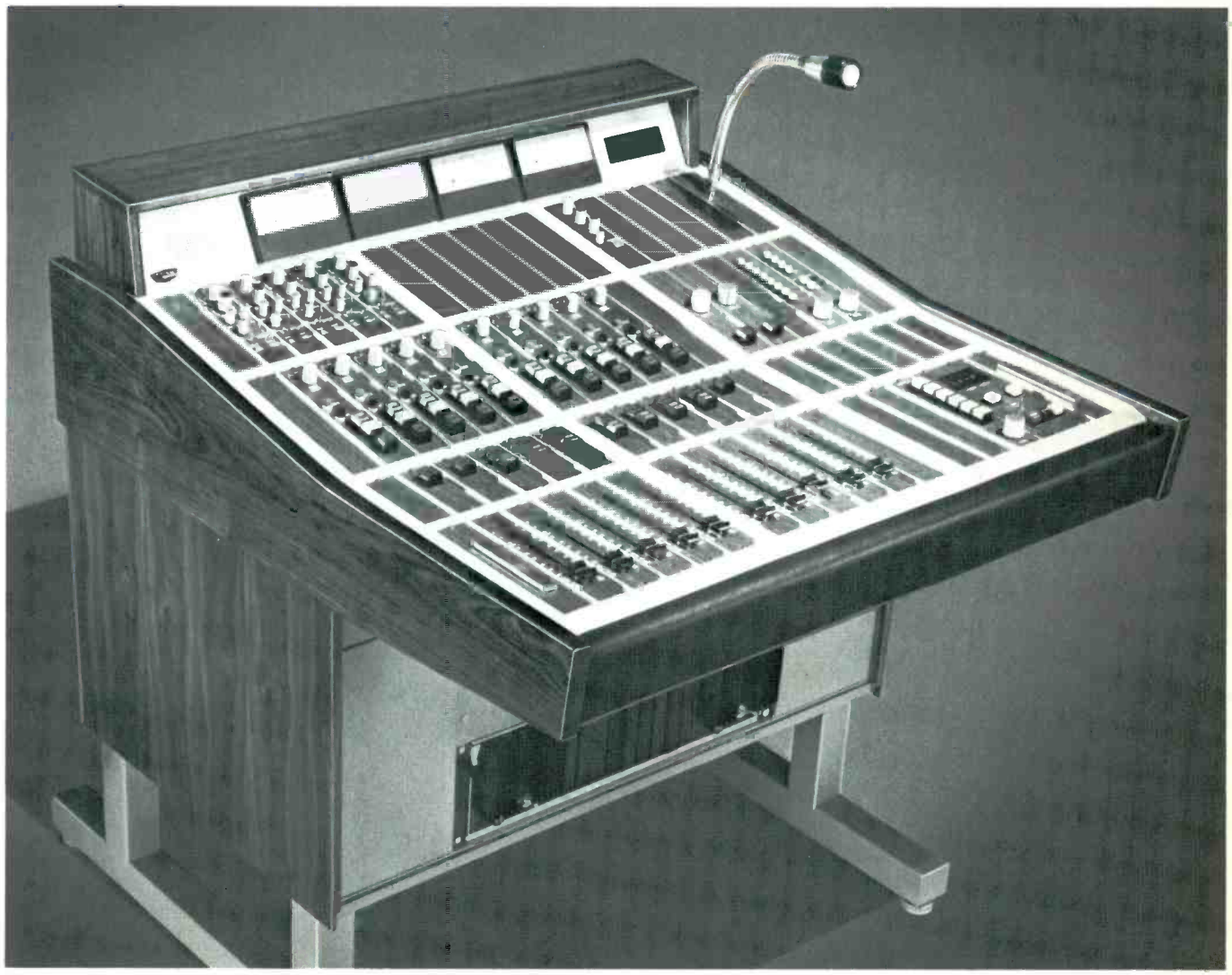

McCurdy

# description

The McCurdy SS8500 stereo console is a fully modular, free-standing audio production and mixing system providing full facilities for broadcast or other professional applications. Its compactness and flexibility make it ideally suited for use as an 'on-air' console or master control centre in radio facilities. The wide range of modules available along with the many options allow custom tailoring of the console to suit your individual needs.

# SS8500 package features

- Fully modular, all modules, amplifiers, controls, power supplies and optional equipment plug-in to the console panel or auxiliary frames for ease of maintenance.
- All units employ the latest technology in reliable silicon solid-state circuitry.
- The console housing is a one-piece enclosure fabricated of all-welded heavy-gauge steel for strength and maximum RF shielding. It is finished in scratch-resistant, textured blue baked enamel.
- The control panel hinges upward, aided and damped by high-pressure gas cylinders, allowing access to all internal wiring.
- Free standing, completely self-supporting unit, no table or desks required. The console is stable even with control panel lifted.
- The console control panel is finished in damage-resistant woodgrained vinyl clad steel inset into etched, extruded aluminum panels and high-lighted by engraved style strips.
- A padded armrest covered in durable black leather-grained vinyl is provided for operating comfort.
- The console end bells and VU housing are constructed of richly grained hand-rubbed oiled walnut.
- For ease of operation, all controls are easily accessible and arranged in uncrowded groupings according to related functions.
- All input/output connections are made to terminal blocks or to connectors, XLR type for audio, rack and panel type for DC controls, mounted on a hinged panel.

# SS8500 operational facilities

- Ten stereo input channels are provided, complete with A/B switching, allowing for 20 stereo audio sources.
- Each mixer is equipped with a specially designed Penny and Giles conductive plastic stereo slide attenuator with greater than 80 dB attenuation before cutoff, excellent stereo tracking and separation.
- Cue switching is provided in the maximum attenuation position of each attenuator along with a front panel pushbutton on each input, echo send or foldback module.
- Illuminated Program and Audition selector pushbuttons are provided on each input module to allow operation to both output channels simultaneously or each independently.
- Two stereo output channels, Program and Audition, are provided. Each is supplied with four output splits, with up to 12 available on each.
- Four VU meters are provided, two each for the Program and Audition outputs.
- Provision is made for a mono output channel and metering.
- A wide range of standard input modules is available providing complete facilities and allowing the tailoring of each mixer input to suit your specific requirements.
- Certain input modules are equipped with a pan control to enable panning of the single (mono) input between the two (stereo) module output channels.
- All inputs are balanced, with provision for accommodating levels from −70 dBm to +10 dBm across the range of input modules.
- Channel on/off switching controlled by an illuminated, silent, momentary pushbutton switch.
- Provision is made for remote channel-on switching by a single on/off switch or separate on and off switches.
- Complete monitor facilities, incorporating an eight pushbutton selector and rotary gain control, are provided.
- Separate monitor facilities with individual input selection and rotary gain control can be supplied for control room, headset or other requirements.
- Cue monitor is provided by a pushbutton on each input module or from the maximum attenuation position of each mixer attenuator.
- All microphone inputs are balanced and floating.
- All line inputs are balanced and bridging.
- All outputs are active, balanced.
- Provision is made for the insertion of optional signal processing equipment, such as equalizers, compressors, filters, etc.
- Echo Send and Foldback outputs, complete with gain controls, VU meters selector and on/off switches, are available. These features are prewired, requiring only the addition of the amplifier modules and metering panel.
- Output amplifier modules can be supplied with internal rotary gain controls or external slide attenuators.
- A comprehensive cue/talkback system, complete with microphone and speaker, is provided to allow complete four station inter-communication. Talkback is mixed with cue, preventing loss of cue during inter-communication.
- Plug-in modules for remote, DC, control of tape machines, turntables, etc. are available. Up to five illuminated, silent, momentary pushbuttons per module can be supplied.
- Plug-in modules for input selection, providing ten select pushbuttons, and mode selection are available.
- The direct microphone channel output can be optionally utilized to allow the announce microphone to be used with external equipment, intercom, etc.
- Fully customized versions of this console can be designed to suit your particular system requirements.

# available options

- Remote control modules, up to 5 pushbutton, for tape machines, etc.
- Equalizers and equalizer delegation
- Compressors
- Multi-frequency oscillators
- Foldback system
- Echo-send and return system
- Real time digital clock with internal battery to prevent loss of time during power failures and capability to drive four remote displays
- Digital up/down counter with control panel capable of driving four remote displays and remote control from machine starts
- Distribution amplifier systems
- Ten station input selectors
- Stereo mode selectors
- Monitor power amplifiers
- Mono output channel and VU meter
- Peak program meters
- Prewired jackfields
- Redundant power supply systems with automatic or manual changeover
- Additional output splits, up to a maximum of 12 per output
- Direct, unswitched, microphone outputs
- Operation on 220-240V AC Power

# specifications

## Input level

1) Microphone:
   −60dBm, 150 ohms, balanced and floating, for microphone select
   −70dBm, to −25dBm, balanced and floating, for certain input modules
2) Line: −20dBm to +10dBm, 600 ohms, balanced, depending on input module

## Input impedance

1) Microphone: 10 times source, varying slightly with certain input modules
2) Line: 10,000 ohms, balanced, bridging

## Inputs provided

Two switch-selected inputs per mixer channel

## Output level

1) Program output: +8dBm, 600 ohms, balanced
2) Audition output: +8dBm, 600 ohms, balanced
3) Monitor output: −10dBm, 600 ohms, balanced
4) Cue output: 2 Watts, maximum, 8 ohms

## Frequency response

Any input to any 600 ohm output: ±1dB, 20Hz to 20kHz; ±0.5dB, 30Hz to 15kHz, reference 1kHz

## Noise

1) Microphone input: −125dBm, or better, equivalent input noise, 20Hz to 20 kHz
2) Line input: Better than 80dB below test level, 10dB above program level, 20Hz to 20 kHz

## Transients

Better than 60dB below output, at test level, when operating a relay or pushbutton

## Distortion

Any input to any 600 ohm output: 0.25% maximum at test level, 10dB above program, 20Hz to 20kHz.

## Channel separation

With test level input on left channel and measuring right, or the reverse; within ±5dB, 30 Hz to 15kHz

## Crosstalk

At least 60dB below test level when feeding −50dBm into −60dBm microphone input and measuring an unused channel. Normal attenuator settings on both channels.

## Stereo Tracking

Within ±0.5dB over normal attenuator operating range.

## Headroom

1) Input Stage: 40dB
2) Mixer bus: 27dB
3) Equalizers: 27dB
4) Outputs: 16dB
   All with normal in-hand attenuator settings of 12dB

## Power Requirements

Power Requirements
105 to 125 volts (220 to 240 volts, optional), 50/60Hz

## Ambient Temperature

0° to 55°C(76° to 131°F)

## Overall Dimensions

Height: 36 in. (91.44 cm)
Width: 33.5 in. (85.1 cm)
Depth: 35 in. (88.9 cm)

# ordering information

Contact the nearest McCurdy Radio office for engineering assistance, application and pricing information.

# SS 8500 interior view

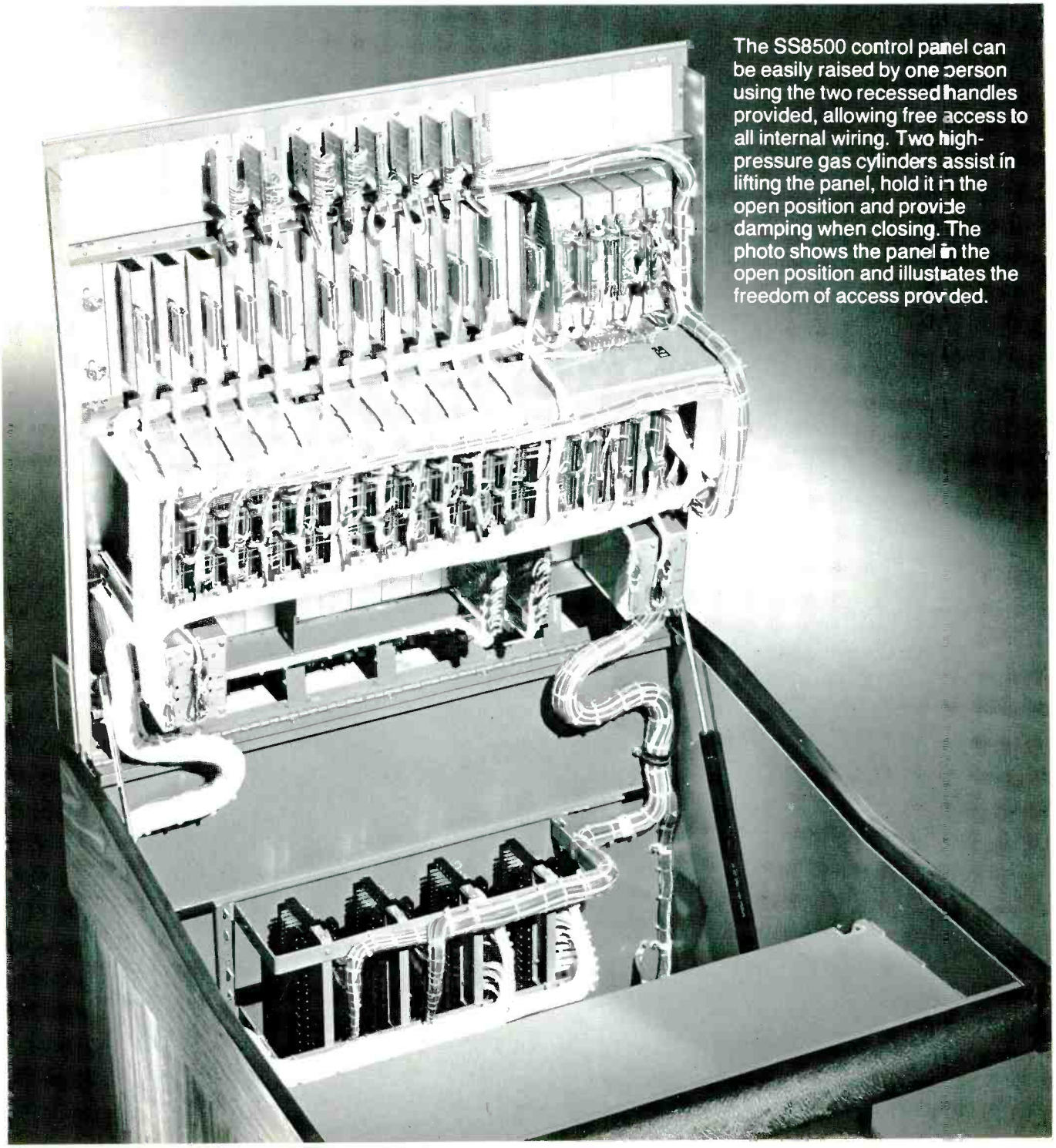

The SS8500 control panel can be easily raised by one person using the two recessed handles provided, allowing free access to all internal wiring. Two high-pressure gas cylinders assist in lifting the panel, hold it in the open position and provide damping when closing. The photo shows the panel in the open position and illustrates the freedom of access provided.

# SS8500 series output modules

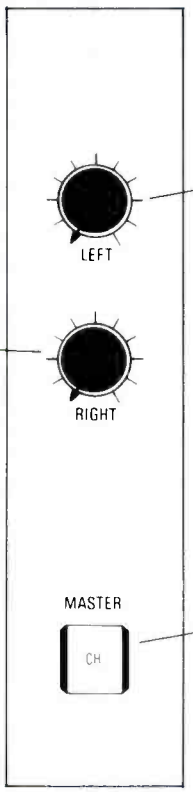


**Left Channel Gain Control**
Adjusts Gain of Left Channel

**Right Channel Gain Control**
Adjusts Gain of Right Channel

**Channel-On Switch**
Connects Module Output to Output Line

PM8521 — PROGRAM OUTPUT
AUD8521 — AUDITION OUTPUT

The Channel-On Switches are Illuminated, Alternate-Action Pushbuttons. On when depressed

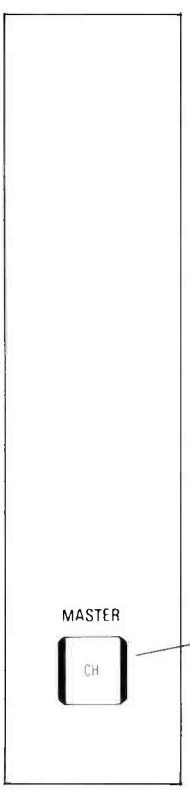


Gain of These Modules Is Adjusted By An External Slide Attenuator

**Channel-On Switch**
Connects Module Output To Output Line

PM8522 — PROGRAM OUTPUT
AUD8522 — AUDITION OUTPUT

## TYPICAL STEREO INPUT

**Echo Send On/Off Switch**
connects module output to echo send bus

**Foldback On/Off Switch**
connects module output to foldback bus

**Cue On/Off Switch**
Connects pre-fader output to cue bus

**Program Assign Switch**
connects module output to program bus

Channel-On Switching may also be controlled remotely on any module

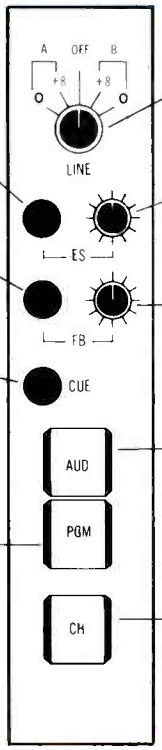


IM8508-00-09

**Input Selector**
Selects Off, A or B input and on some modules, Level

**Echo Send Level Control**
adjusts level of Echo Send output

**Foldback Level Control**
adjusts level of foldback output

**Audition Assign Switch**
connects Module output to Audition bus

**Channel-On Switch**
connects module output to input of other Assign switches

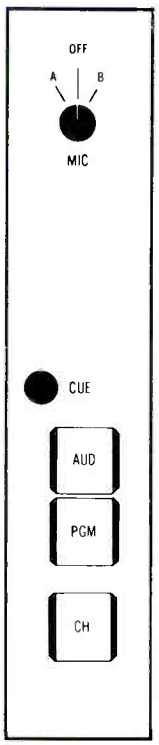


IM8501-00-02

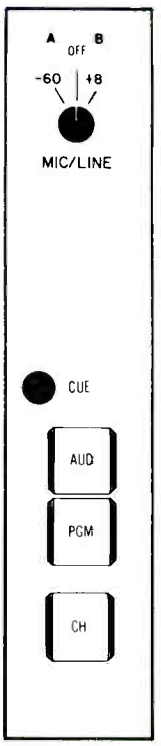


IM8501-00-08

## TYPICAL MONO INPUT

**Input Select Switch**
selects A input, Off, or B input

**Echo Send On/Off Switch**
connects module output to echo send bus

**Cue On/Off Switch**
connects pre-fader output to cue bus

**Program Assign Switch**
connects module output to program bus

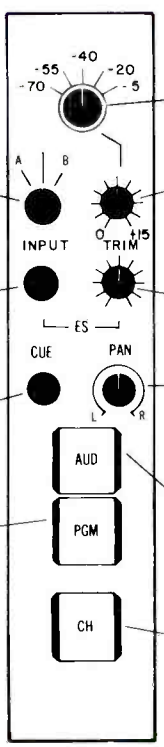


IM8508-00-07

**Input Sensitivity Switch**
selects desired input level

**Gain Trim Control**
allows input sensitivity to be decreased up to 15dB

**Echo Send Level Control**
Adjusts level of echo send output

**Pan Control**
Allows panning of the mono input between the left & right outputs

**Audition Assign Switch**
Connects module output to audition bus

**Channel-On Switch**
Connects module output to input of other assign switches

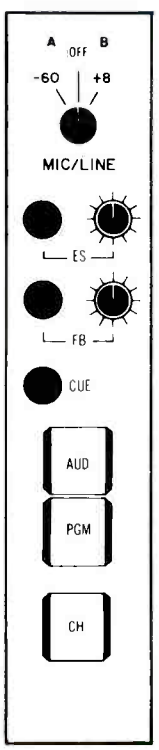


IM8507-00-08

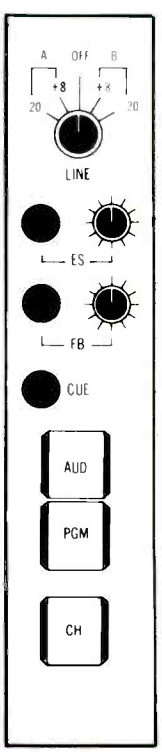


IM8508-00-06

Audition, Program and Channel-On switches are illuminated

# SS8500 series input modules

IM8502-00-06

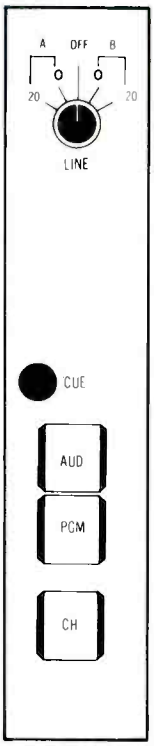


IM8502-00-07

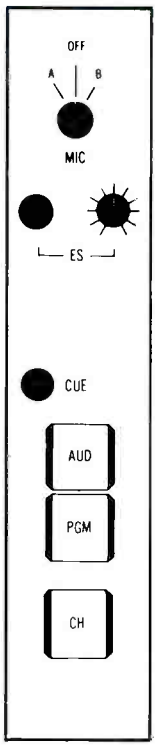


IM8505-00-02

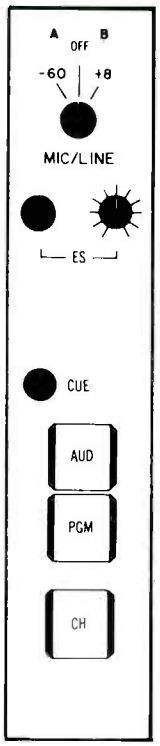


IM8505-00-08

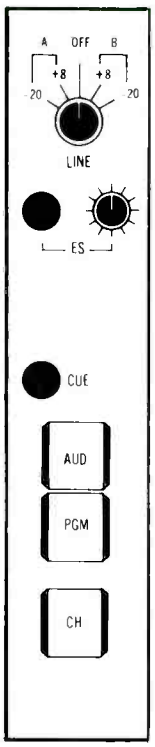


IM8506-00-06

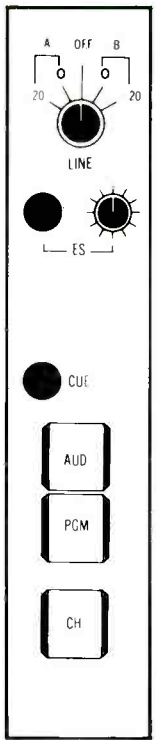


IM8506-00-07

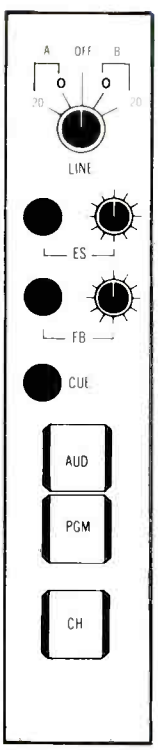


IM8508-00-07

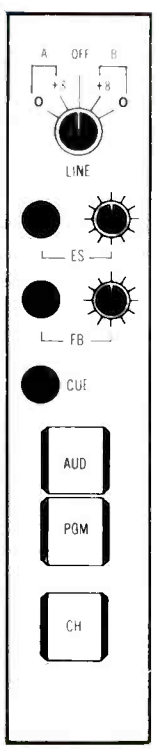


IM8508-00-09

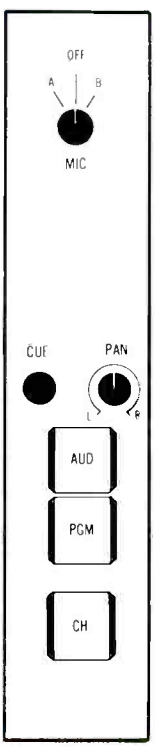


IM8509-00-02
(MONO INPUT)

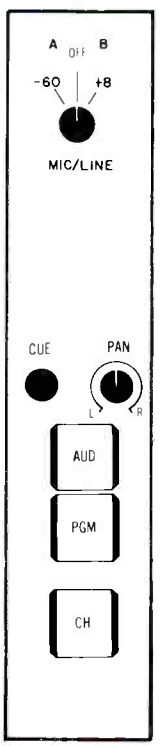


IM8509-00-08
(MONO INPUT)

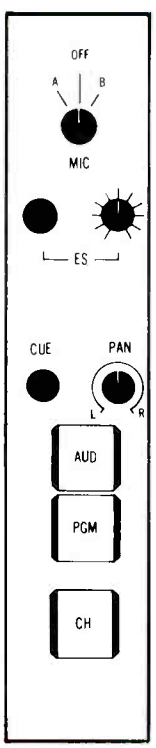


IM8510-00-02
(MONO INPUT)

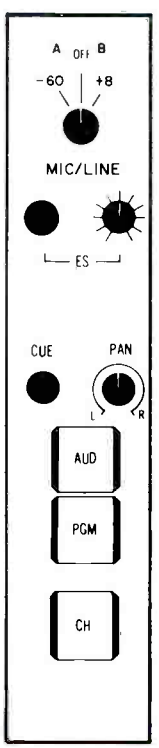


IM8510-00-08
(MONO INPUT)

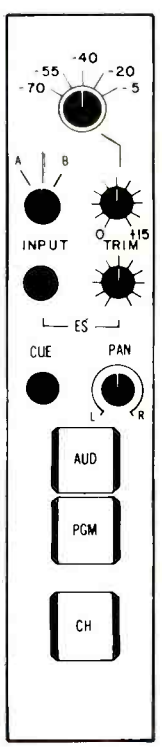


IM8511-00-10
(MONO INPUT)

# SS8500 series auxiliary modules

**Left Channel Gain Control**
Adjusts gain of left channel output

**Left Channel Cue On/Off Switch**
Connects pre-gain control output to cue bus

**Left Channel-On Switch**
Connects left channel output to output line

**Right Channel Gain Control**
Adjusts gain of right channel output

**Right Channel Cue On/Off Switch**
Connects pre-gain control output to cue bus

**Right Channel-On Switch**
Connects right channel output to output line

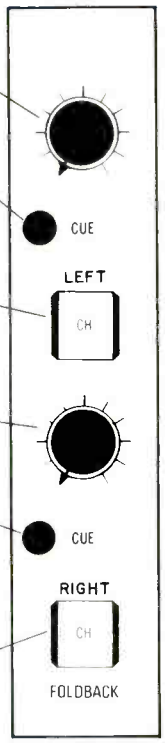


FFM 8446
STEREO
FOLDBACK

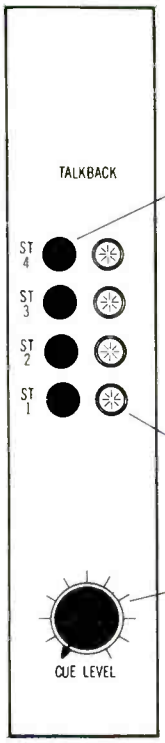


**Talkback Call Switches**
Allows operator to call one of four stations

**Talkback Indicators**
Illuminated when being called by designated station

**Cue Level Control**
Adjusts level of output to cue speaker

CM 8442
4 STN
CUE MODULE

**Left Channel Gain Control**
Adjusts gain of left channel output

**Left Channel Cue On/Off Switch**
Connects pre-gain control output to cue bus

**Left Channel-On Switch**
Connects left channel output to output line

**Right Channel Gain Control**
Adjusts gain of right channel output

**Right Channel Cue On/Off Switch**
Connects pre-gain control output to cue bus

**Right Channel-On Switch**
Connects right channel output to output line

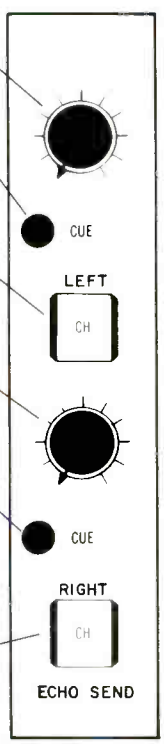


EEM 8446
STEREO
ECHO SEND

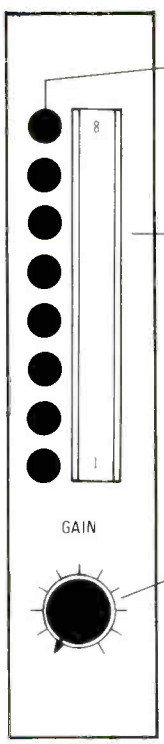


**Input Select Switches**
Selects one of eight inputs to be monitored

**Designation Strip**
Indicates connections to input select switches. May be easily changed allowing customer designation of switches.

**Monitor Gain Control**
Adjusts level of monitor output

MM 8532
STEREO
MONITOR

All Channel-On Switches are illuminated, alternate action pushbuttons on when depressed

# 8500 series accessory modules

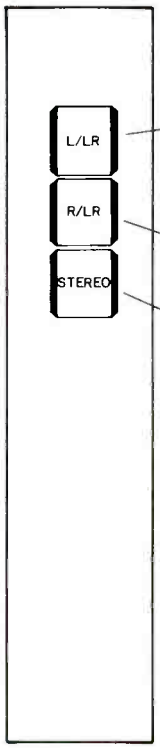


Left input to left & right
**Output Switch**

Right input to left & right
**Output Switch**

**Stereo Switch**
Switches are illuminated pushbuttons, on when depressed

IS8554
STEREO MODE
SELECTOR

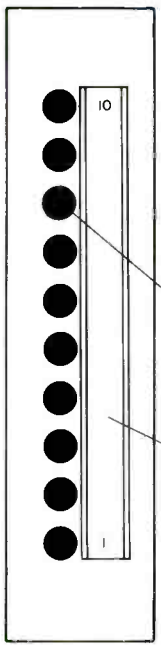


**Input Select Switch**
Allows selection of 1 of 10 stereo inputs

**Designation Strip**
Indicates connections to input select switches. May be easily changed allowing customer designation of switches.

IS8553
STEREO INPUT
SELECTOR

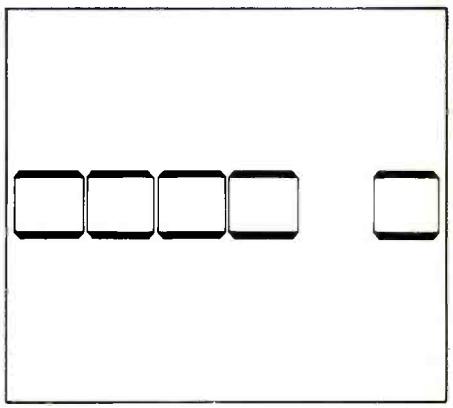

DC8485 5 STN. MOM D.C. CTL

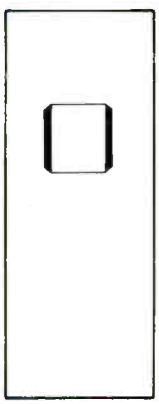

DC8481
1 STN.
MOM
D.C. CTL

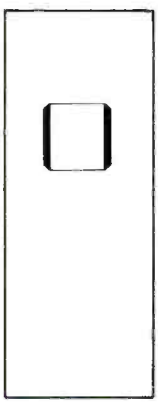

DC8481L
1 STN.
ALT/ACT
D.C. CTL

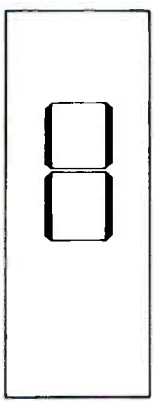

DC8482
2 STN.
MOM
D.C. CTL

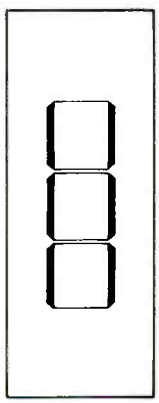

DC8483
3 STN.
MOM
D.C. CTL

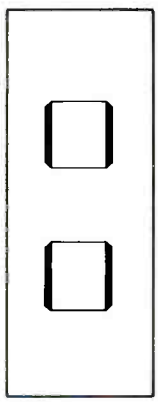

DC8484
2 STN.
MOM
D.C. CTL

D.C. Remote Controls 1, 2, 3 or 5 illuminated pushbutton switches for remote control functions

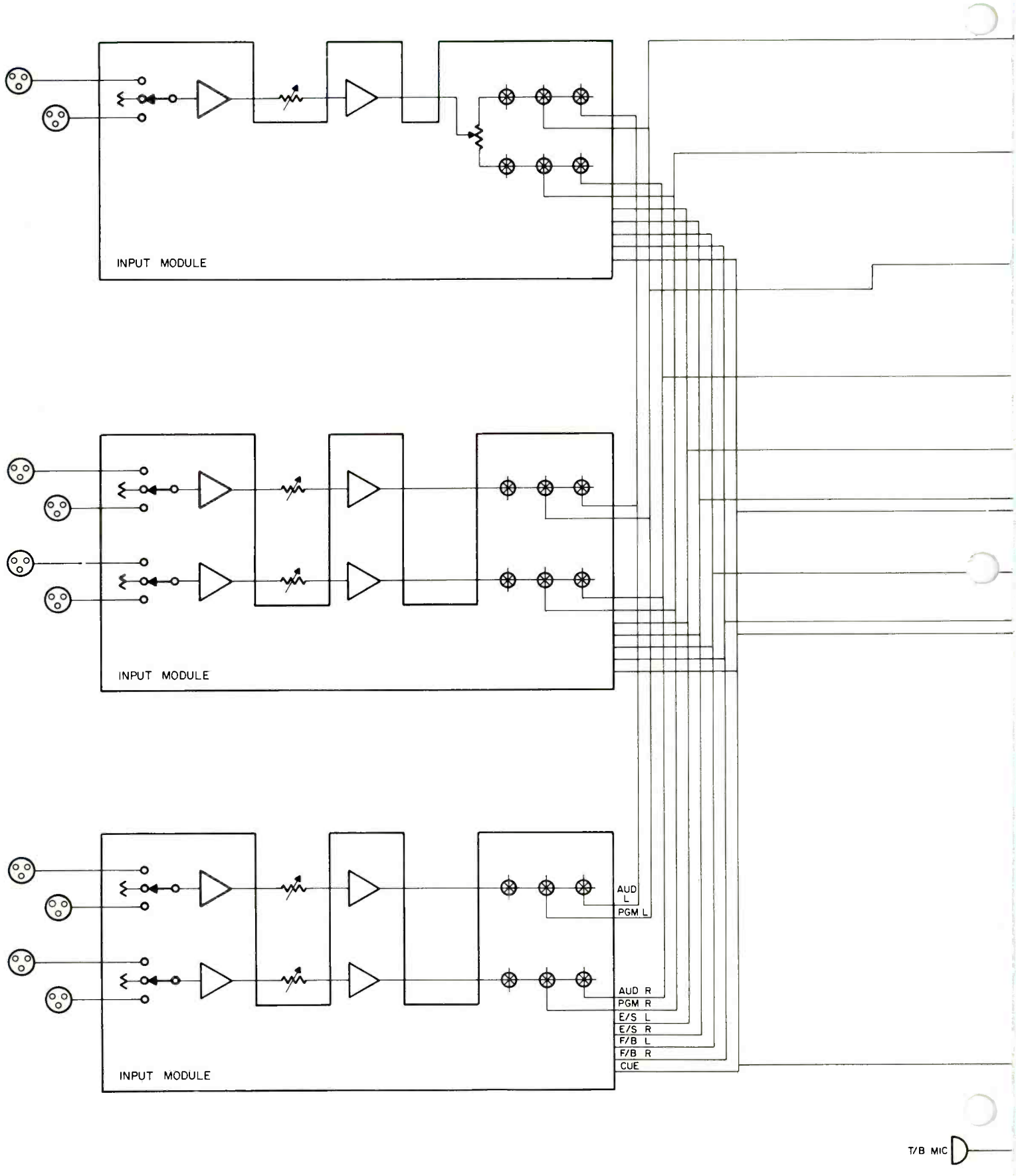
INPUT MODULE
INPUT MODULE
INPUT MODULE
AUD L
PGM L
AUD R
PGM R
E/S L
E/S R
F/B L
F/B R
CUE
T/B MIC

# SS8500 functional

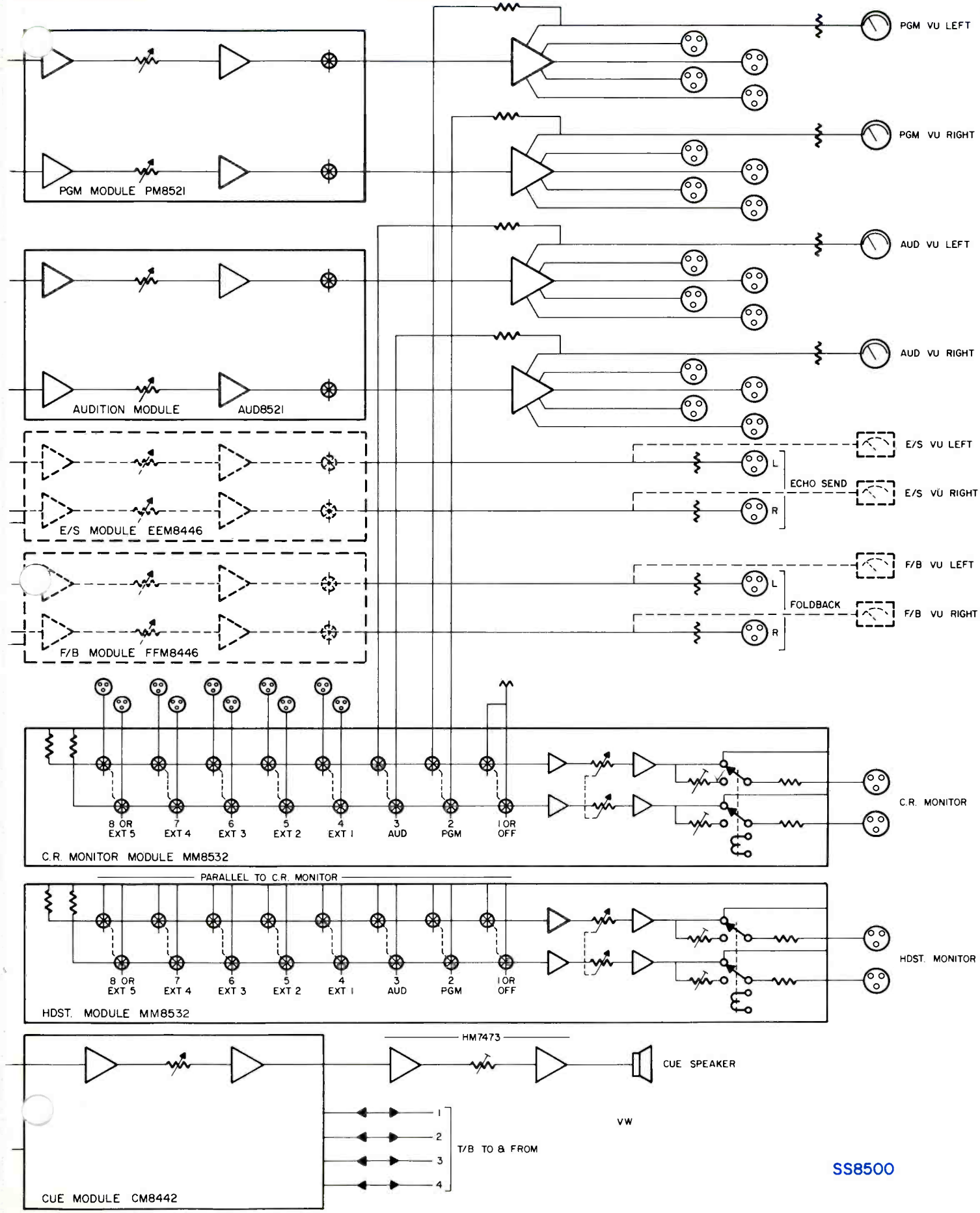


SS8500

Program & Audition VU Meters

Digital Clock or Up/Down Counter
(Optional)

Fixed Equalizers
In Mono Input Channels Only

Input Modules, 10 Channels, Stereo

Specially Designed Conductive Plastic Slide Attenuators,
for 10 Input Channels

Recessed Lifting Handle
For Lifting Control Panel

DC Remote Controls

Solid Walnut End Bells

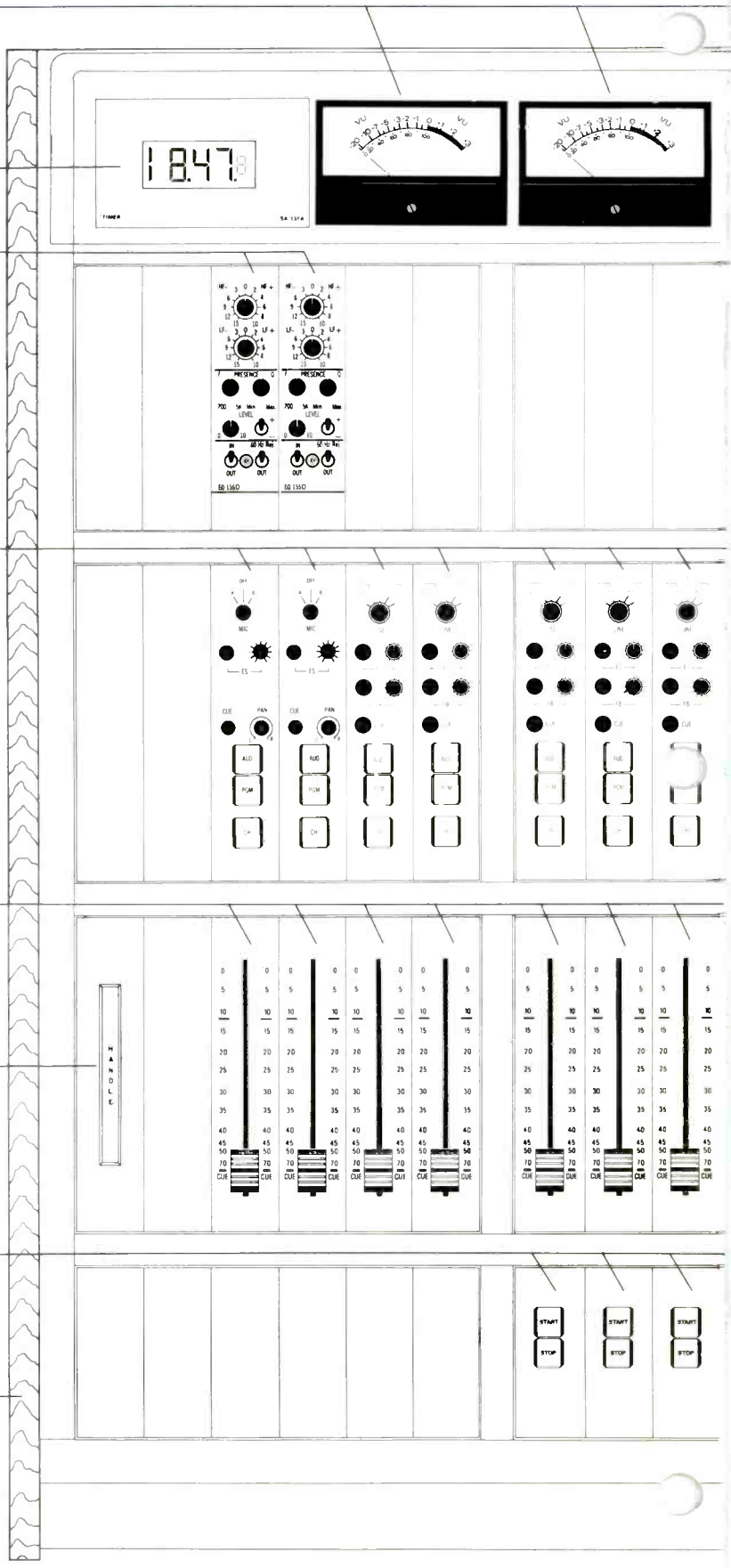


All Blank Panels, with the exception of those at outer edges, may be utilized for optional or future equipment.

SOME OF THE FACILITIES & EQUIPMENT ILLUSTRATED IS OPTIONAL, AT EXTRA COST. .

# SS8500 front panel

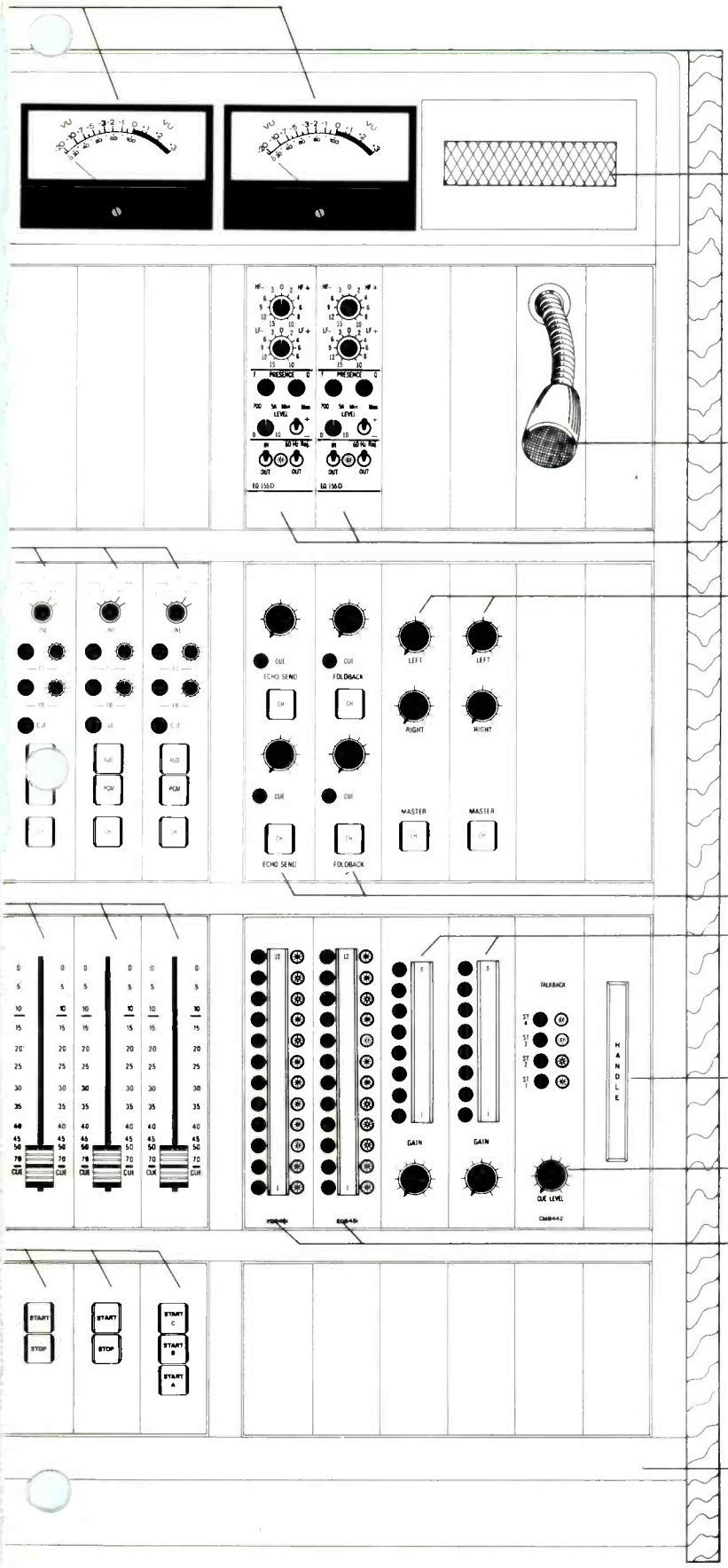

Cue Speaker

Talkback Microphone

Assignable Equalizers

Program & Audition Output Modules

Stereo Foldback & Echo Send Modules

Headset & Control Room Monitor Modules

Recessed Lifting Handle
For Lifting Control Panel

Cue & Talkback Module

Equalizer Insert Module
For Assignment of Assignable Equalizers

Padded Armrest

The Remote Control Section may be placed above the Attenuator Section, between the Attenuator and Input Module Sections, if desired.

# installation

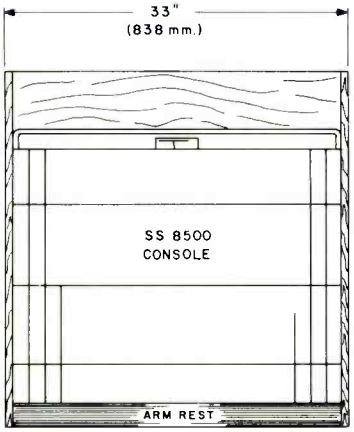


TOP

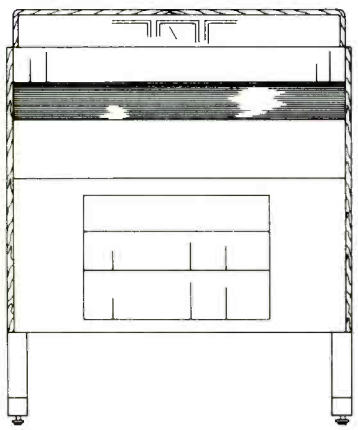

FRONT

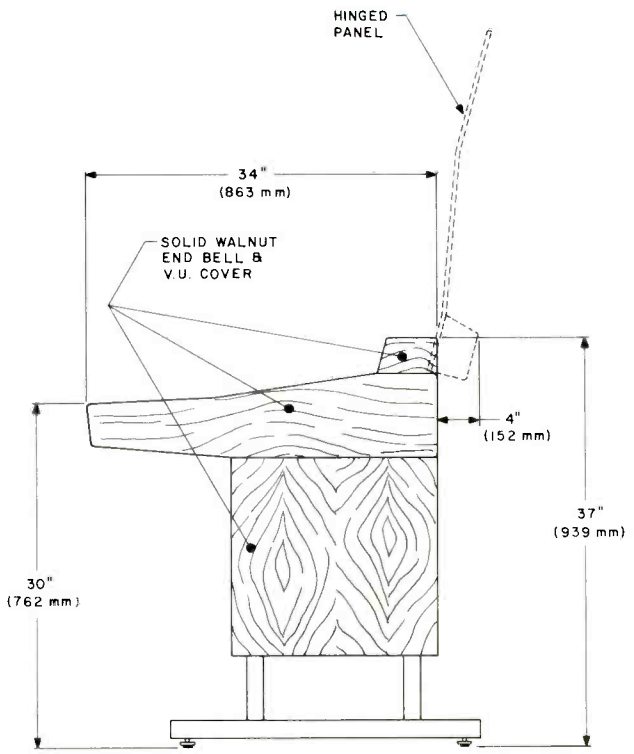


SIDE

PRINTED IN CANADA

**McCURDY RADIO INDUSTRIES LIMITED**
108 CARNFORTH ROAD, TORONTO, ONTARIO M4A 2L4 (416) 751-6262, TELEX 06-963533, TWX 610-492-1373

**McCURDY RADIO INDUSTRIES INC.**
UNITED STATES HEAD OFFICE
1711 CARMEN DRIVE, ELK GROVE VILLAGE, ILLINOIS 60007, (312) 640-7077, TWX 910-222-0436
EAST COAST OFFICE
223 WEST SADDLE RIVER ROAD, SADDLE RIVER, N.J. 07458, (201) 327-0750, TWX 710-988-2254
BUFFALO WAREHOUSE
1051 CLINTON STREET, BUFFALO, N.Y. 14206, DIRECT LINE TO TORONTO PLANT (716) 854-6700, TWX 610-492-1373

McCurdy Radio Industries reserves the right, without notice to make such changes in equipment, design, specifications, or components as progress in engineering or manufacturing techniques may warrant to improve the performance of the product.

# SS 8650

## modular stereo audio console

McCurdy

# description

The McCurdy SS8650 stereo console is a fully modular, free-standing audio production and mixing system providing full facilities for broadcast or other professional applications. Its compactness and flexibility make it ideally suited for use as an "on-air" console or master control centre in radio facilities.

Each SS8650 is built with the full range of popular options prewired, allowing them to be supplied by merely inserting the proper modules into the spaces and connectors provided. Thus, permitting a high quality full feature console to be made available at a very reasonable price. A limited number of special order options are also available. These features along with the comprehensive range of modules available allow tailoring of the console to suit your specific requirements.

The SS8550 console, offering many of the same features as the SS8650, with fewer mixers and in a smaller package, is available for installations where space is at a premium.

The SS8500 and SS8600 series consoles are available for installations requiring more operational facilities, equalizers in each channel, mode selectors, etc., than are incorporated in the SS8650.

# SS 8650 package features

- Fully modular, all modules, amplifiers, controls, power supplies and optional equipment plug-in to the console panel or auxiliary frames for ease of maintenance.
- All units employ the latest technology in reliable silicon solid-state circuitry.
- The control panel hinges upward, aided and damped fabricated of all-welded heavy-gauge steel for strength and maximum RF shielding. It is finished in scratch-resistant, textured blue baked enamel.
- The control panel hinges upward, aided and dampened by high-pressure gas cylinders, allowing access to all internal wiring.
- Free standing, completely self-supporting unit, no table or desks required. The console is stable even with control panel lifted.
- The console control panel is finished in damage-resistant woodgrained vinyl clad steel inset into etched, extruded aluminum panels and highlighted by engraved style stripe.
- A padded armrest covered in durable black leather-grained vinyl is provided for operating comfort.
- The console end bells and VU housing are constructed of richly grained hand-rubbed oiled walnut.
- For ease of operation, all controls are easily accessible and arranged in uncrowded groupings according to related functions.
- All input/output connections are made to telephone type terminal blocks easily accessible from the rear of the console.
- A large, centrally located script board is provided for operating convenience.

# SS 8650 operational facilities

- A maximum of sixteen stereo input channels are provided, complete with A/B switching, allowing for 32 stereo audio sources.
- Each mixer is equipped with a specially designed Penny and Giles conductive plastic stereo slide attenuator with greater than 80dB attenuation before cutoff, excellent stereo tracking and separation.
- Cue switching is provided in the maximum attenuation position of each attenuator along with a front panel pushbutton on each input, echo send or foldback module.
- Illuminated Program and Audition selector pushbuttons are provided on each input module to allow operation to both output channels simultaneously or each independently.
- A maximum of two stereo output channels, Program and Audition, are provided. Each is supplied with four output splits.
- Two VU meters are provided for the program output.
- Provision is made for a mono output channel and metering.
- A wide range of standard input modules is available providing complete facilities and allowing the tailoring of each mixer input to suit your specific requirements.
- Certain input modules are equipped with a pan control to enable panning of the single (mono) input between the two (stereo) module output channels.
- All inputs are balanced, with provision for accommodating levels from −70dBm to +10 dBm across the range of input modules.
- Channel on/off switching controlled by an illuminated, silent, momentary pushbutton switch.
- Provision is made for remote channel-on switching by a single on/off switch or separate on and off switches.
- Complete monitor facilities, incorporating two modules, each provided with an eight pushbutton selector and rotary gain control.
- Separate monitor facilities with individual input selection and rotary gain control can be supplied for control room, headset or other requirements.
- Cue monitor is provided by a pushbutton on each input module or from the maximum attenuation position of each mixer attenuator.
- All microphone inputs are balanced and floating.
- All line inputs are balanced and bridging.
- All outputs are active, balanced.
- Provision is made for the insertion of optional, balanced, signal processing equipment, such as equalizers and compressors.
- Echo Send and Foldback outputs, complete with gain controls, VU meters selector and on/off switches, are available.
- Output amplifier modules are supplied with internal rotary gain controls.
- A comprehensive cue/talkback system, complete with built-in speaker, is provided to allow complete four station inter-communication. Talkback is mixed with cue, preventing loss of cue during inter-communication.
- Plug-in modules for remote, DC, control of tape machines, turntables, etc. are available. Up to five illuminated, silent, momentary pushbuttons per module can be supplied.
- Plug-in modules for input selection, providing ten select pushbuttons, and mode selection are available.

# available options

## Prewired Options:

The following options are prewired on all SS8650 consoles, allowing them to be supplied by merely inserting the proper modules into the spaces and connectors provided.

- Audition output channel with four 600 ohm splits and rotary level controls.
- Talkback microphone.
- Two variable equalizers and equalizer insert modules equipped with twelve-position pushbutton switches incorporating integral indicators. Equalizer insert module also available with red LED indicators.
- Stereo or mono Echo Send and Foldback outputs.
- Two VU meters for Audition output channel.
- Audition VU meter select switch, when equipped with Audition VU meters, allowing selection of Audition, Echo Send, Foldback or one of two external inputs for VU monitoring.
- Mono sum output.
- VU meter for monitoring of mono sum output.
- Selector switch allowing the mono sum output to be taken from either the Program or Audition output.
- Peak Program Meters in place of any or all of the VU meters.
- A maximum of two, ten-station stereo input selectors.
- One multi-frequency precision test oscillator for console set-up, testing, etc.
- An enclosed auxiliary frame assembly, mounting beneath the main console housing, for installation of distribution amplifiers, monitor amplifiers, or other special equipment.
- One additional monitor module, with eight-station selector and rotary gain control.

## Special Order Options:

The following options are supplied on special order only, they are not prewired and must be specified at time of ordering.

- A maximum of twenty-two DC remote control modules for the control of turntables, tape machines or other external equipment from the console control panel.
- Distribution amplifier systems.
- Monitor power amplifiers.
- Prewired jackfields.
- Redundant power supply systems with automatic or manual changeover.
- Direct, unswitched microphone outputs.
- Real time digital clock with internal battery to prevent loss of time during power failures and capability to drive four remote displays.
- Digital up/down counter with control panel, capable of driving four remote displays and remote control from machine starts.
- Placement of remote control section above attenuator section, between attenuator and input module section.
- Input/output connections made to connectors, XLR type for audio, rack and panel type for DC controls, instead of terminal blocks. All are mounted on a hinged rear panel.
- Operation on 220 to 240 Volt AC power.

# specifications

## Input level

1) Microphone:
   −60dBm, 150 ohms, balanced and floating, for microphone select
   −70dBm, to −25dBm, balanced and floating, for certain input modules
2) Line: −20dBm to +10dBm, 600 ohms, balanced, depending on input module

## Input impedance

1) Microphone: 10 times source, varying slightly with certain input modules
2) Line: 10,000 ohms, balanced, bridging

## Inputs provided

Two switch-selected inputs per mixer channel

## Output level

1) Program output: +8dBm, 600 ohms, balanced
2) Audition output: +8dBm, 600 ohms, balanced
3) Monitor output: −10dBm, 600 ohms, balanced
4) Cue output: 2 Watts, maximum, 8 ohms

## Frequency response

Any input to any 600 ohm output: ±1dB, 20Hz to 20kHz; ±0.5dB, 30Hz to 15kHz, reference 1kHz

## Noise

1) Microphone input: −125dBm, or better, equivalent input noise, 20Hz to 20 kHz
2) Line input: Better than 80dB below test level, 10dB above program level, 20Hz to 20 kHz

## Transients

Better than 60dB below output, at test level, when operating a relay or pushbutton

## Distortion

Any input to any 600 ohm output: 0.25% maximum at test level, 10dB above program, 20Hz to 20kHz.

## Channel separation

With test level input on left channel and measuring right, or the reverse; within ±5dB, 30 Hz to 15kHz

## Crosstalk

At least 60dB below test level when feeding −50dBm into −60dBm microphone input and measuring an unused channel. Normal attenuator settings on both channels.

## Stereo Tracking

Within ±0.5dB over normal attenuator operating range.

## Headroom

1) Input Stage: 40dB
2) Mixer bus: 27dB
3) Equalizers: 27dB
4) Outputs: 16dB
   All with normal in-hand attenuator settings of 12dB

## Power Requirements

Power Requirements
105 to 125 volts (220 to 240 volts, optional), 50/60Hz

## Ambient Temperature

## Overall Dimensions

Height: 37 in. (94 mc)
Width: 53 in. (137 cm)
Depth: 32 in. (81 cm)

# ordering information

Contact the nearest McCurdy Radio office for engineering assistance, application and pricing information.

# SS 8650 interior view

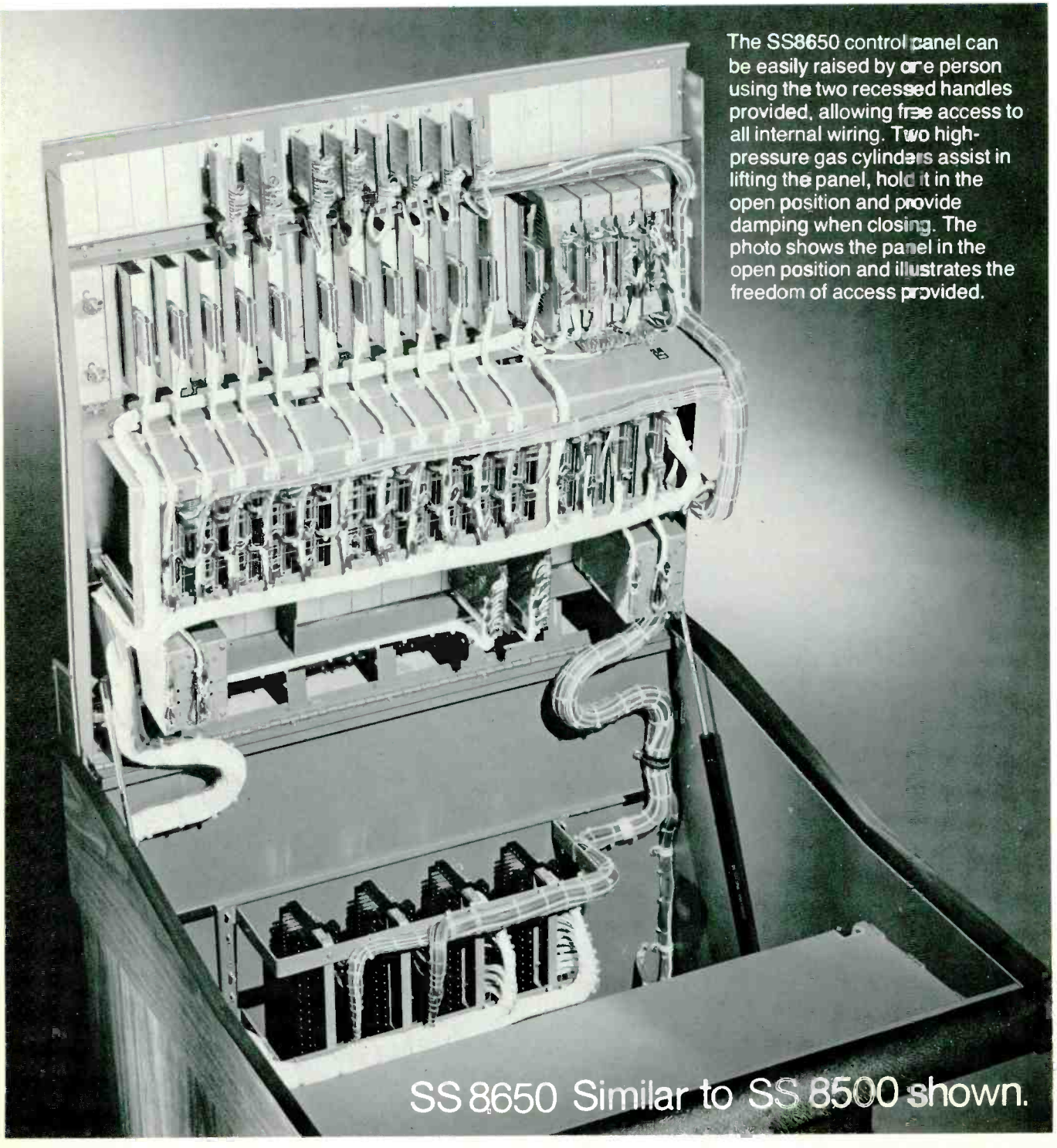

# SS 8650 output modules

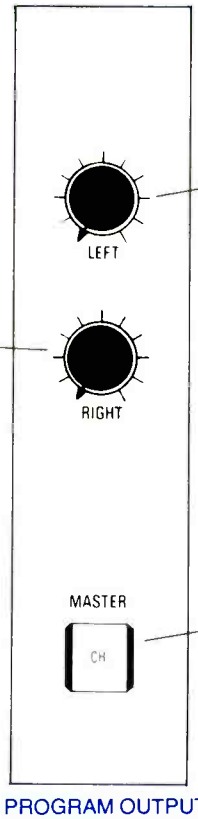


**Left Channel Gain Control**
Adjusts Gain of Left Channel

**Right Channel Gain Control**
Adjusts Gain of Right Channel

**Channel-On Switch**
Connects Module Output to Output Line

PM8521 – PROGRAM OUTPUT, STEREO
AUD8521 – AUDITION OUTPUT, STEREO

The Channel-On Switches are Illuminated, Alternate-Action Pushbuttons. On when depressed

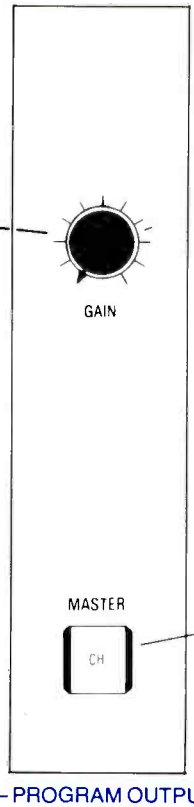


**Gain Control**
Adjusts Gain

**Channel-On Switch**
Connects Module Output To Output Line

PM8423— PROGRAM OUTPUT, MONO

## TYPICAL STEREO INPUT

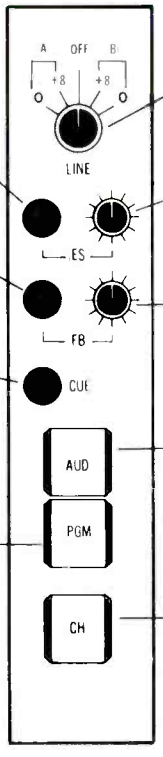


**Input Selector**
Selects Off, A or B input and on some modules, Level

**Echo Send On/Off Switch**
connects module output to echo send bus

**Echo Send Level Control**
adjusts level of Echo Send output

**Foldback On/Off Switch**
connects module output to foldback bus

**Foldback Level Control**
adjusts level of foldback output

**Cue On/Off Switch**
Connects pre-fader output to cue bus

**Audition Assign Switch**
connects Module output to Audition bus

**Program Assign Switch**
connects module output to program bus

**Channel-On Switch**
connects module output to input of other Assign switches

Channel-On Switching may also be controlled remotely on any module

IM8508-00-09

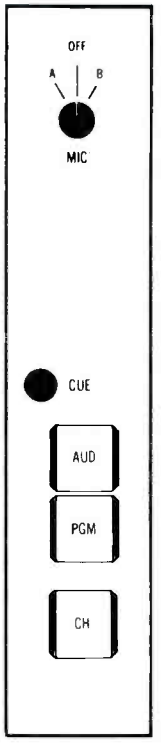


IM8501-00-02

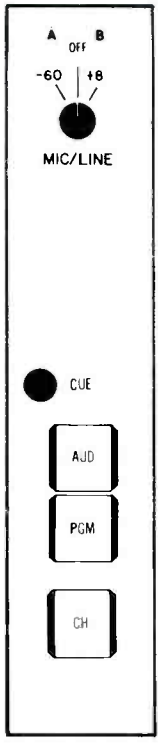


IM8501-00-08

## TYPICAL MONO INPUT

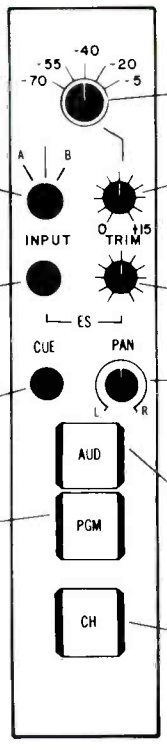


**Input Sensitivity Switch**
selects desired input level

**Input Select Switch**
selects A input, Off, or B input

**Gain Trim Control**
allows input sensitivity to be decreased up to 15dB

**Echo Send On/Off Switch**
connects module output to echo send bus

**Echo Send Level Control**
Adjusts level of echo send output

**Pan Control**
Allows panning of the mono input between the left & right outputs

**Cue On/Off Switch**
connects pre-fader output to cue bus

**Audition Assign Switch**
Connects module output to audition bus

**Program Assign Switch**
connects module output to program bus

**Channel-On Switch**
Connects module output to input of other assign switches

IM8511-00-10

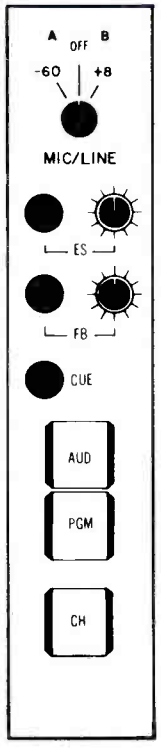


IM8507-00-08

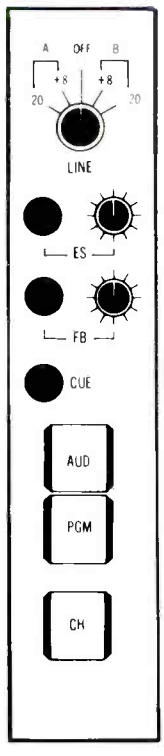


IM8508-00-06

Audition, Program and Channel-On switches are illuminated

# SS 8650 input modules

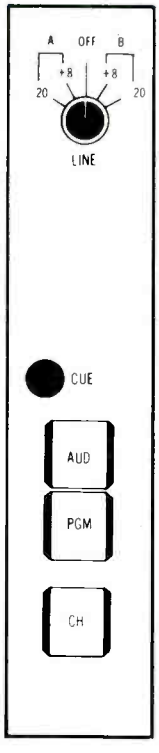


IM8502-00-06

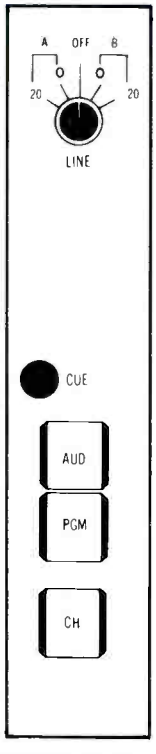


IM8502-00-07

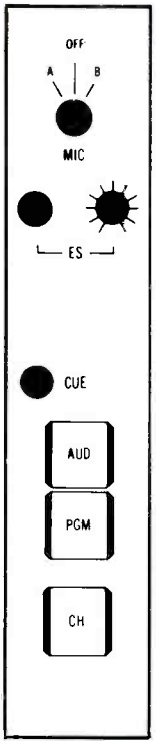


IM8505-00-02

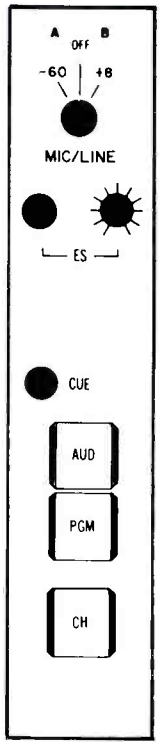


IM8505-00-08

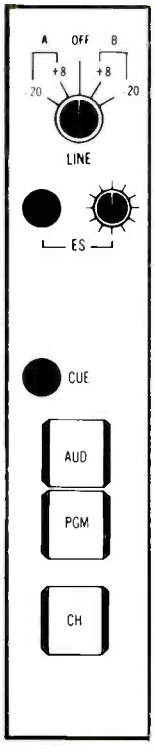


IM8506-00-06

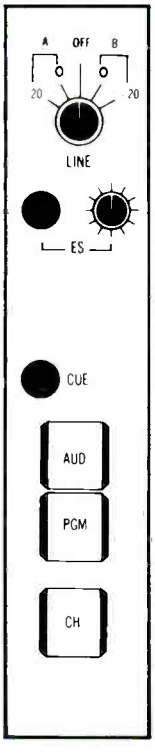


IM8506-00-07

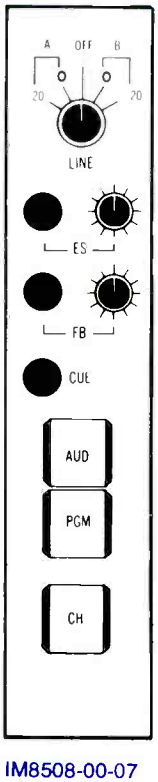


IM8508-00-07

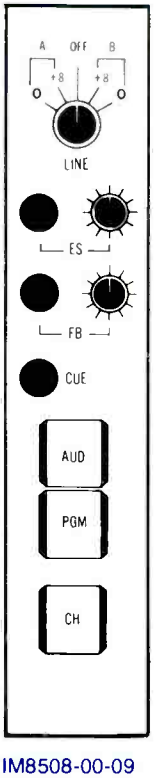


IM8508-00-09

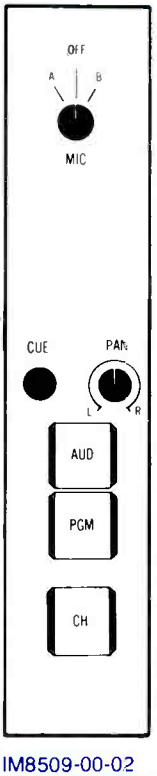


IM8509-00-02
(MONO INPUT)

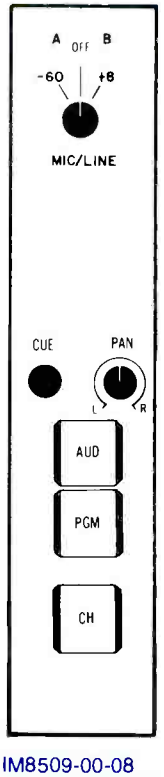


IM8509-00-08
(MONO INPUT)

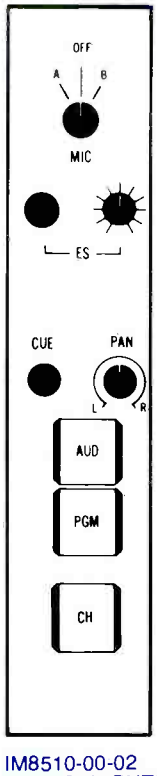


IM8510-00-02
(MONO INPUT)

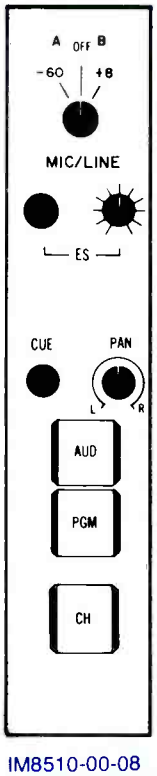


IM8510-00-08
(MONO INPUT)

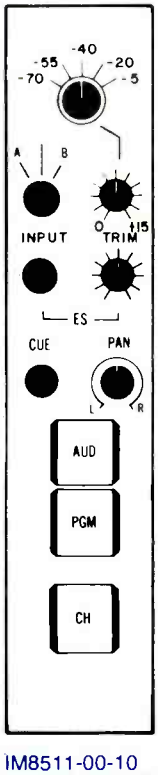


IM8511-00-10
(MONO INPUT)

# SS 8650 auxiliary modules

**Left Channel Gain Control**
Adjusts gain of left channel output

**Left Channel Cue On/Off Switch**
Connects pre-gain control output to cue bus

**Left Channel-On Switch**
Connects left channel output to output line

**Right Channel Gain Control**
Adjusts gain of right channel output

**Right Channel Cue On/Off Switch**
Connects pre-gain control output to cue bus

**Right Channel-On Switch**
Connects right channel output to output line

**Mono Version Same As Shown**
Except without left channel

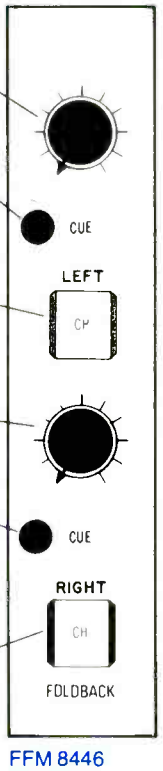


FFM 8446
STEREO
FOLDBACK

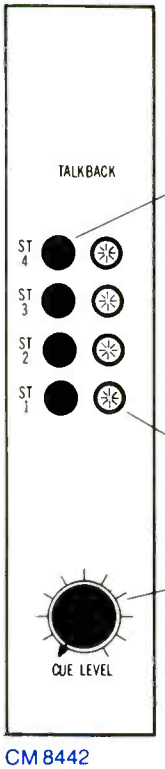


CM 8442
4 STN
CUE MODULE

**Talkback Call Switches**
Allows operator to call one of four stations

**Talkback Indicators**
Illuminated when being called by designated station

**Cue Level Control**
Adjusts level of output to cue speaker

**Left Channel Gain Control**
Adjusts gain of left channel output

**Left Channel Cue On/Off Switch**
Connects pre-gain control output to cue bus

**Left Channel-On Switch**
Connects left channel output to output line

**Right Channel Gain Control**
Adjusts gain of right channel output

**Right Channel Cue On/Off Switch**
Connects pre-gain control output to cue bus

**Right Channel-On Switch**
Connects right channel output to output line

**Mono Versions Same As Shown**
Except without right channel

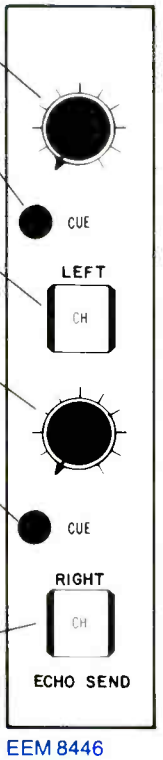


EEM 8446
STEREO
ECHO SEND

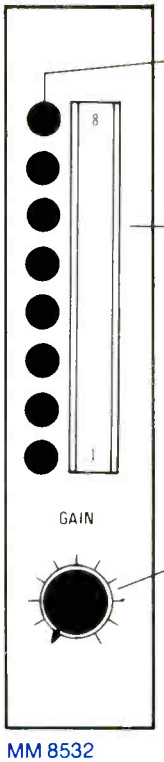


MM 8532
STEREO
MONITOR

**Input Select Switches**
Selects one of eight inputs to be monitored

**Designation Strip**
Indicates connections to input select switches. May be easily changed allowing customer designation of switches.

**Monitor Gain Control**
Adjusts level of monitor output

All Channel-On Switches are illuminated, alternate action pushbuttons. On when depressed

# SS 8650 accessory modules

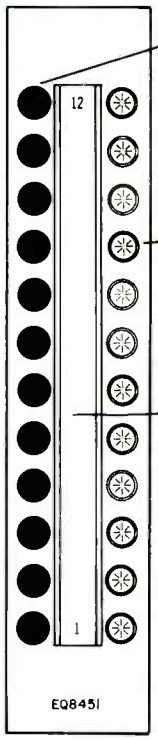


**Equalizer Insert Selector**
allows selection of one of 12 equalizer insertion points

**L.E.D. Indicators**
illuminated when corresponding insert select switch is depressed

**Designation Strip**
indicates connections to equalizer insert select switches. May be easily changed allowing customer designation of switches

EQ8451
12 POSITION
EQ INSERT

Also available
EQ8454
12 position
EQ insert
same as EQ8451, except with self-indicating switches, and without LED indicators

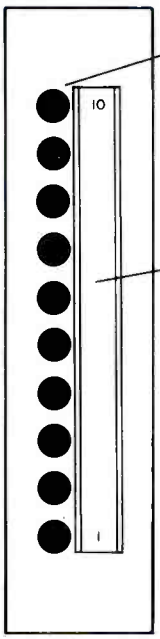


**Input Select Switch**
allows selection of one of 10 inputs

**Designation Strip**
indicates connections to input select switches. May be easily changed allowing customer designation of switches

IS8553
STEREO INPUT
SELECTOR

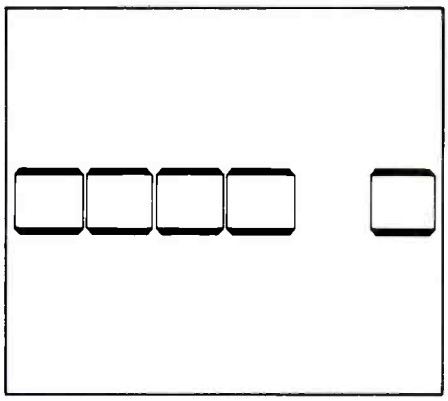

DC8485
5 STN.
MOM
W/BLANK

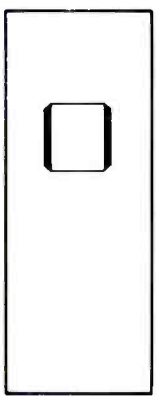

DC8481
1 STN.
MOM
D.C. CTL

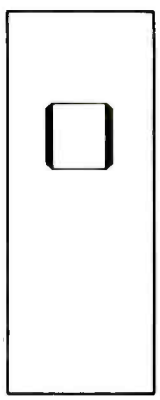

DC8481L
1 STN.
ALT/ACT
D.C. CTL

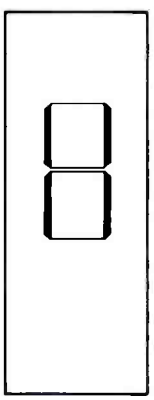

DC8482
2 STN.
MOM
D.C. CTL

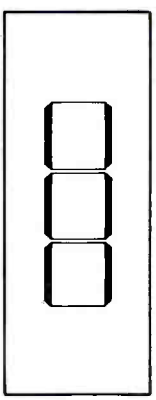

DC8483
3 STN.
MOM
D.C. CTL

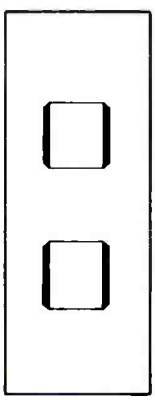

DC8484
2 STN.
MOM
D.C. CTL

D.C. REMOTE CONTROLS 1,2,3 OR 5 ILLUMINATED PUSHBUTTON SWITCHES FOR REMOTE CONTROL FUNCTIONS

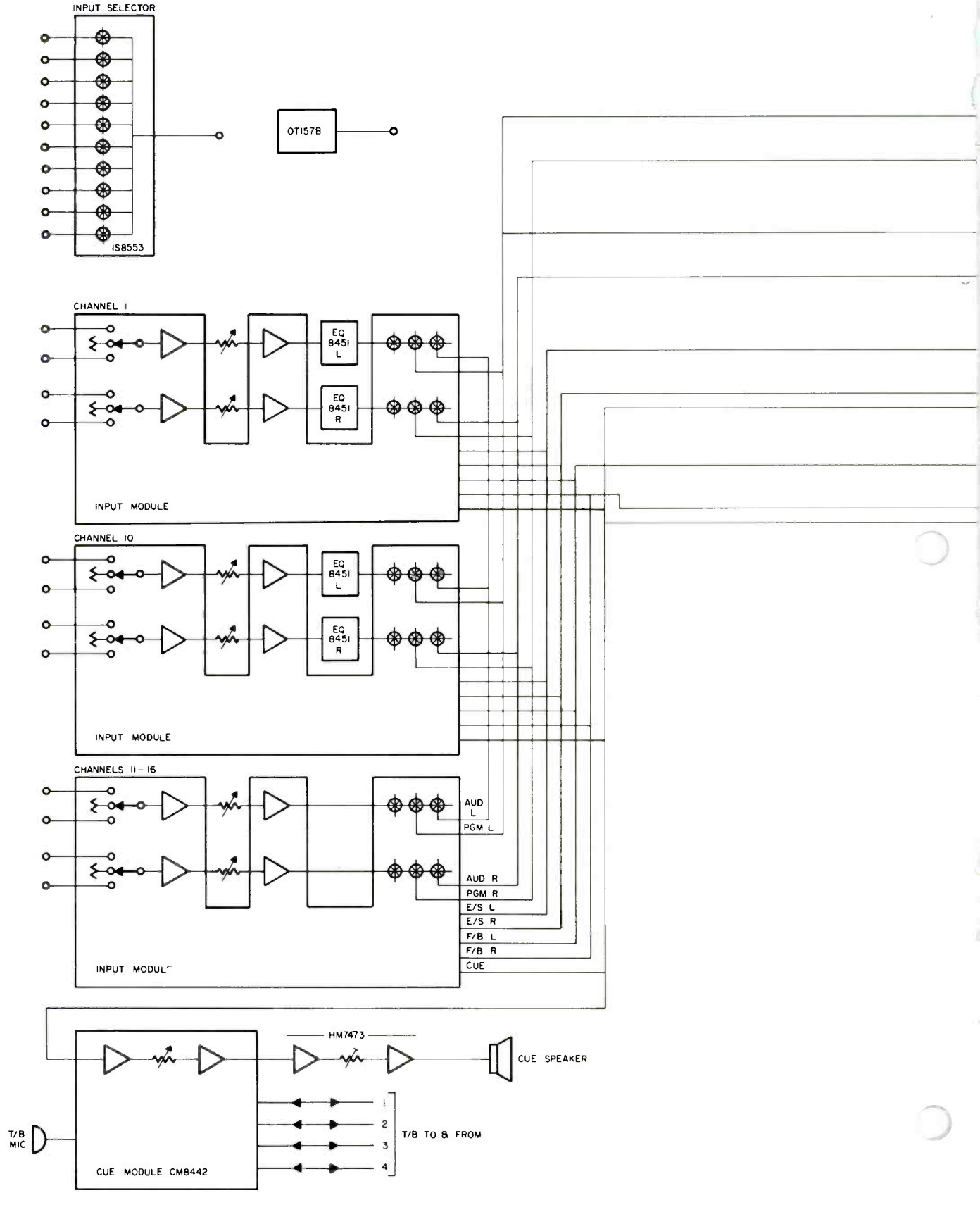
INPUT SELECTOR
IS8553
OT157B
CHANNEL 1
EQ 8451 L
EQ 8451 R
INPUT MODULE
CHANNEL 10
EQ 8451 L
EQ 8451 R
INPUT MODULE
CHANNELS 11 - 16
INPUT MODULE
AUD L
PGM L
AUD R
PGM R
E/S L
E/S R
F/B L
F/B R
CUE
HM7473
CUE SPEAKER
T/B MIC
CUE MODULE CM8442
1
2
3
4
T/B TO 8 FROM

# SS 8650 functional

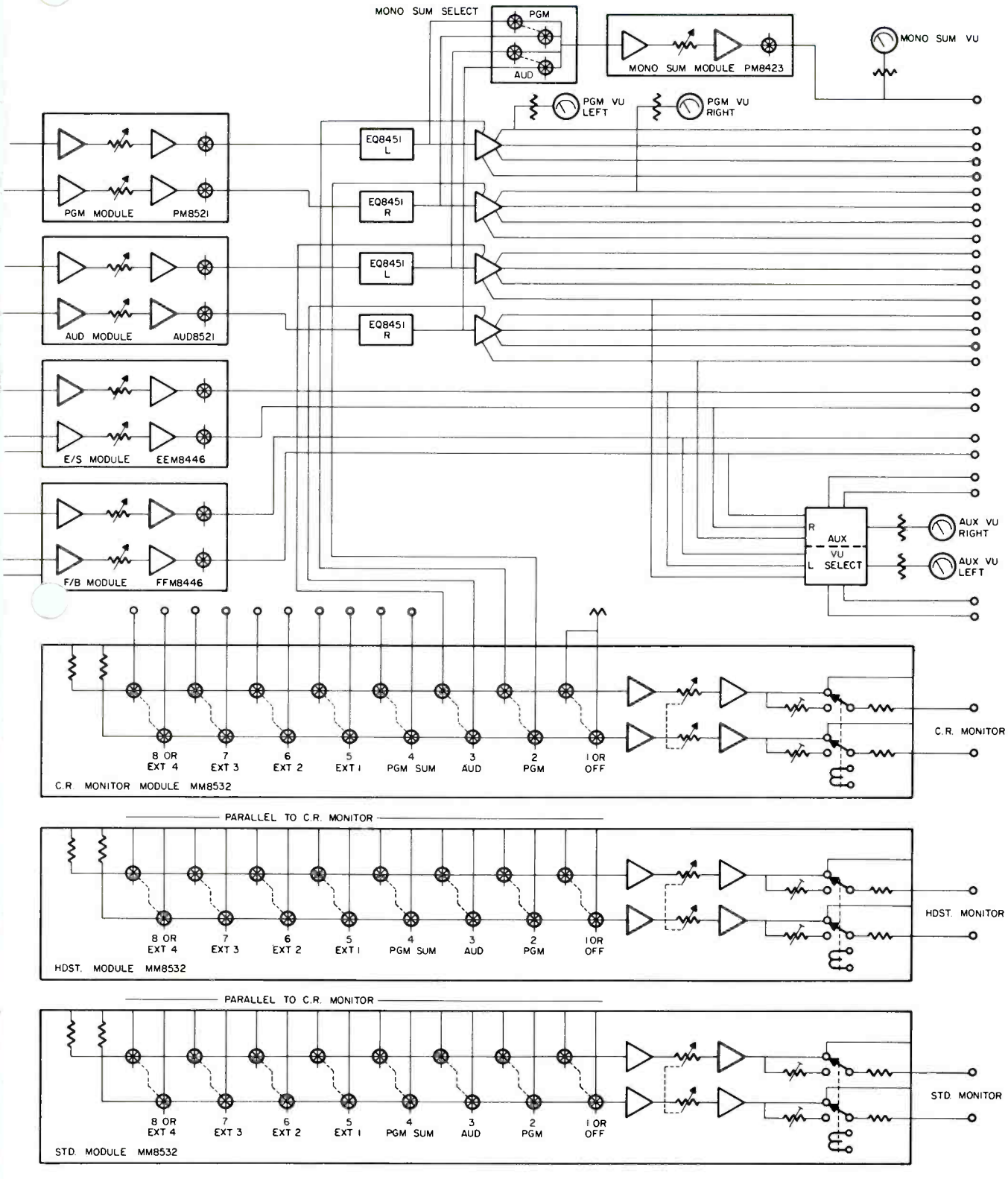

# SS 8650 front panel

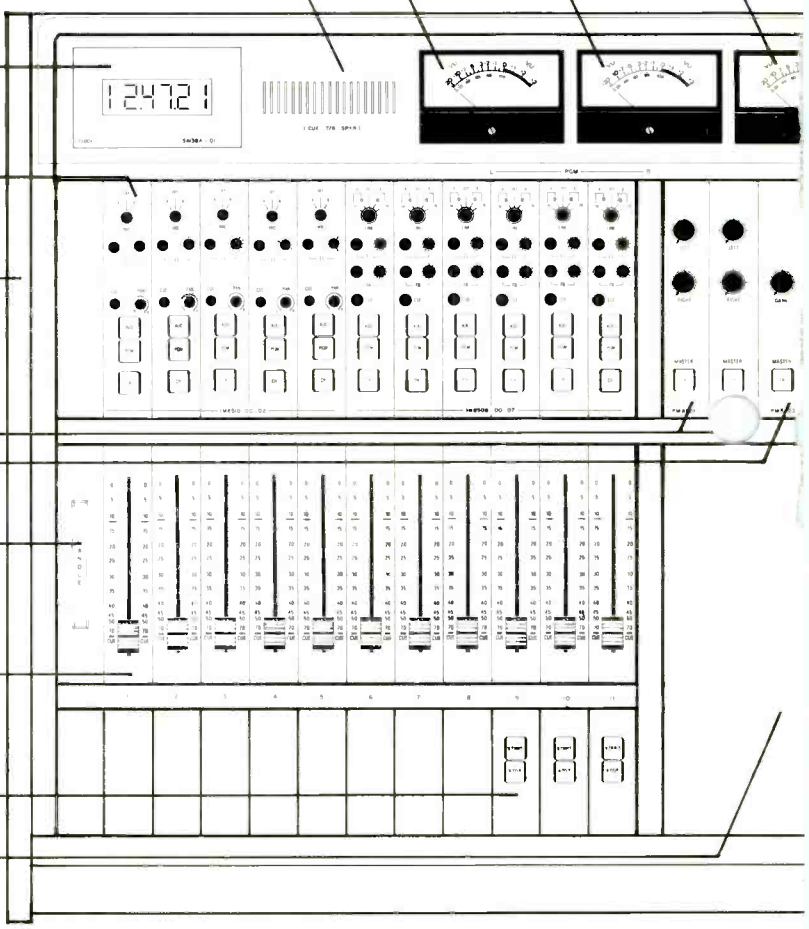


All Blank Panels, with the exception of those at outer edges, may be utilized for optional or future equipment.

SOME OF THE FACILITIES ILLUSTRATED ARE OPTIONAL, AT EXTRA COST.

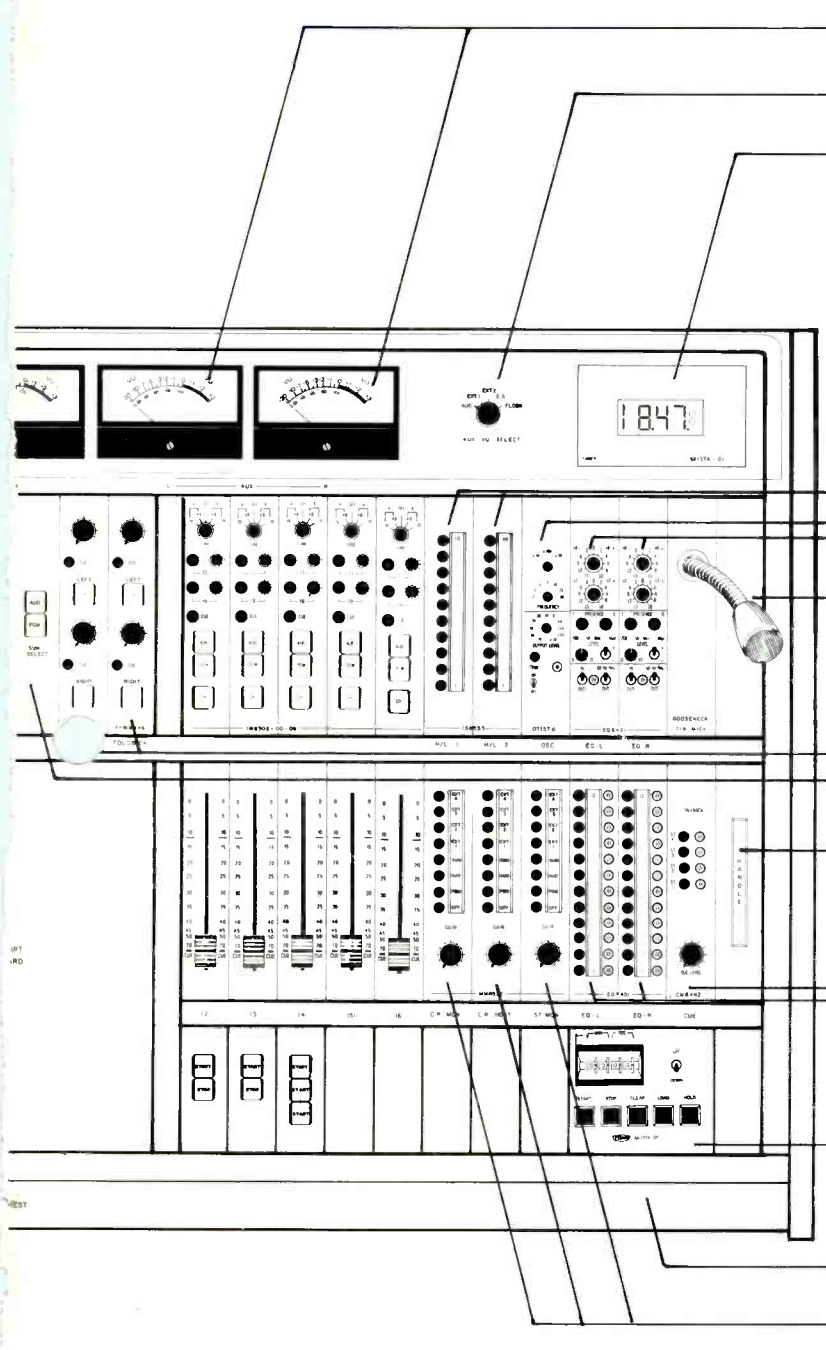

Auxiliary VU Meters

Auxiliary VU Select

Digital Up/Down Counter

Stereo Input Selectors
10 Stations

Test Oscillator
Precision, Multi-Frequency

Assignable Equalizers

Talkback Microphone

Stereo Echo Send &
Foldback Modules

Mono Sum Select Switch
For selecting input to mono SUM channel

Recessed Lifting Handle
For Lifting Control Panel

Cue & Talkback Module

Equalizer Insert Module 12 Stations
For Equalizer Assignment

Counter Control Panel
For Control of Digital Up/Down Counter

Padded Armrest

Headset, Control Room & Studio
Monitor Modules

The Remote Control Section may be placed above the Attenuator Section, between the Attenuator and Input Module Sections, if desired.

# installation

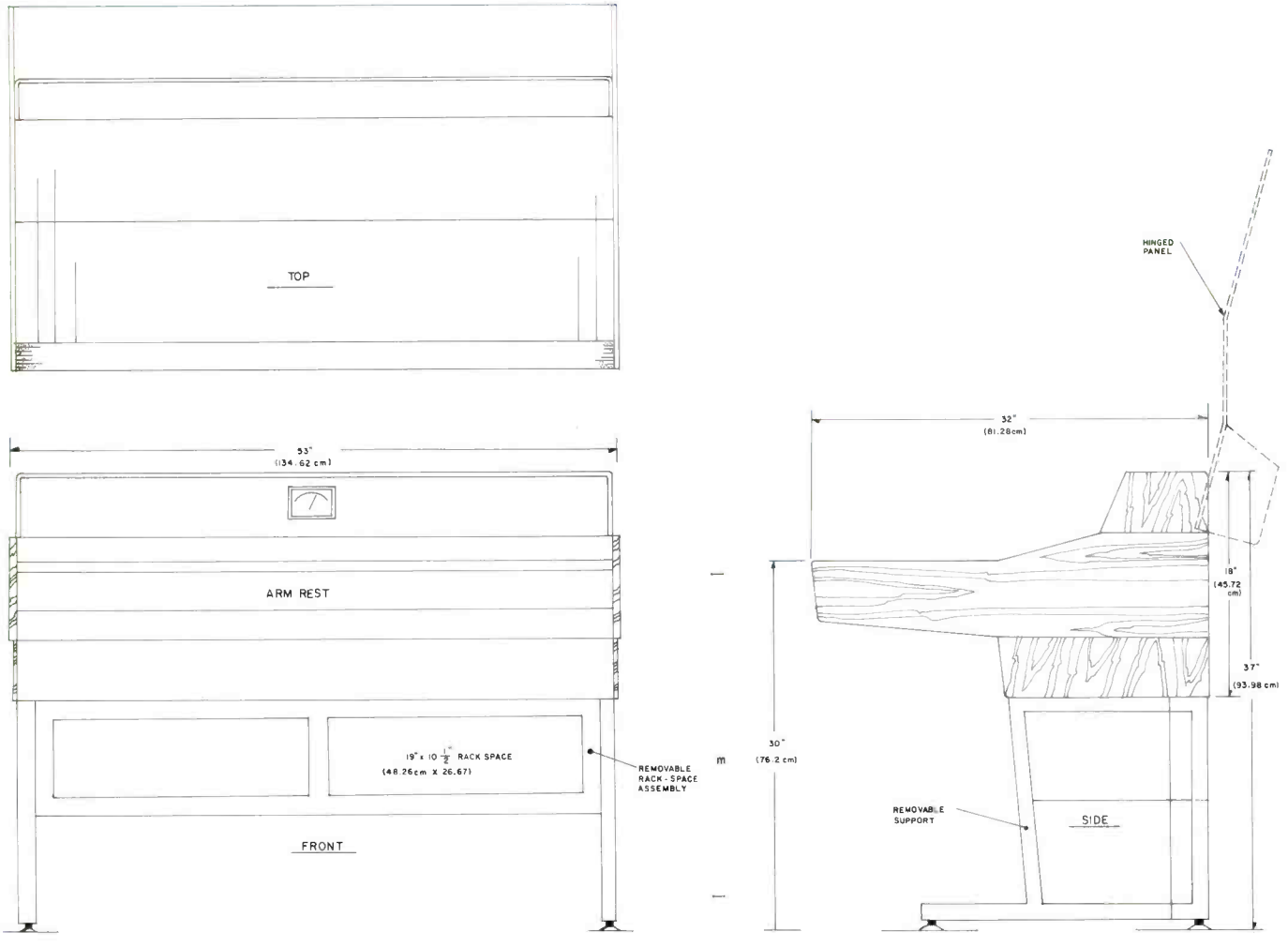




PRINTED IN CANADA

**McCURDY RADIO INDUSTRIES LIMITED**
108 CARNFORTH ROAD, TORONTO, ONTARIO M4A 2L4 (416) 751-6262, TELEX 06-963533, TWX 610-492-1373

**McCURDY RADIO INDUSTRIES INC.**
UNITED STATES HEAD OFFICE
1711 CARMEN DRIVE, ELK GROVE VILLAGE, ILLINOIS 60007, (312) 640-7077, TWX 910-222-0436
EAST COAST OFFICE
223 WEST SADDLE RIVER ROAD, SADDLE RIVER, N.J. 07458, (201) 327-0750, TWX 710-988-2254
BUFFALO WAREHOUSE
1051 CLINTON STREET, BUFFALO, N.Y. 14206, DIRECT LINE TO TORONTO PLANT (716) 854-6700, TWX 610-492-1373

McCurdy Radio Industries reserves the right, without notice to make such changes in equipment, design, specifications, or components as progress in engineering or manufacturing techniques may warrant to improve the performance of the product.

# SS4386B

## 6-mixer single-channel audio console

McCurdy

# description

The SS4386B audio console is a six-mixer single-channel console providing professional facilities for the mixing, monitoring and control of audio program material. The SS4386B is designed for installations such as News Booth or Disc Jockey areas which require a compact console meeting full broadcast specifications.

The SS4386B includes a cue system and is self-powered by means of an internal, regulated, power supply. All amplifiers and the power supply are standard McCurdy plug-in modules incorporating proven silicon solid-state circuitry.

The SS4386B is designed for mounting in a desk top cutout (see dimensional outline diagram). The extremely low silhouette permits the operator an unobstructed view into adjoining areas, a desired feature in many installations.

The control panel presents a highly attractive appearance with its damage-resistant overlay of wood-grain vinyl and clear-anodized aluminum trim. The full-width VU meter panel is enclosed in a housing of solid, oiled walnut. The console end bells are also constructed of oiled walnut.

Operating controls are arranged for optimum separation combined with grouping of related functions.

- Six mixer channels equipped with preamplifiers and slide attenuators.
- Two inputs, selectable by input key, per mixer channel.
- Choice of five amplifiers for microphone or high-level applications. Microphone amplifier with AGC at additional cost.
- Balanced mixer bus.
- Two-Watt cue system with ten-position pushbutton assembly, amplifiers and speaker. Inputs can be cued individually or premixed, without readjusting input attenuators.
- Nine amplifiers and regulated power supply within console, all silicon solid-state plug-in modules.
- Three additional unwired utility keys with provision to add three more.
- Above-desk dimensions; 6 in. high, 18.5 in. deep, 28 in. wide.

## FACILITIES:

The facilities of the SS4386B are shown in the block diagram. The console incorporates six mixer channels, one program channel and a complete cue system, along with monitor and PA feeds.

## PROGRAM CIRCUITS:

Each mixer accommodates two inputs, selectable by a three-position lever key; the centre position of the key is a terminated 'off' position. The key selections are identified by means of designation strips, rather than engraving, so that the customer may designate these as desired.

The mixer channels employ amplifiers in the McCurdy AT280 series, as required by the input configuration and level. Except for the input level accommodated, and possible input pad requirements, these amplifiers are directly interchangeable without wiring changes. The console is normally equipped with AT284 preamplifiers in all mixers, with one low-level input and one high-level input per mixer. The complete range of amplifiers and their operating levels are shown on the functional.

The mixing level is adjusted by means of slide attenuators connected in the interstage sections of the amplifiers. The balanced mixer bus feeds the single program channel, which uses a McCurdy AT291 program amplifier. The final output level is adjusted by means of a high-quality potentiometer controlling the gain of the AT291. Three program output splits are provided, consisting of one line output and two auxiliary outputs, all at +8dBm, 600 ohms.

## MONITORING AND PA:

Continuous visual monitoring of the program channel is provided by a full-size A-scale illuminated VU meter. Local aural monitoring is available at a front-mounted jack provided for high-impedance headsets. In addition, two —10dBm, 600 ohm outputs are provided for feeding external monitor and PA amplifiers. A muting relay for the monitor, and a common level control for both outputs, are supplied as standard equipment. A complete 10-Watt speaker-amplifier assembly is available to accommodate these outputs (model LSA609).

## CUE SYSTEM:

Each amplifier provides a continuous cue output which is taken off ahead of the mixer attenuator. These outputs are fed to six separate pushbuttons in the cue-select bank. Also, each mixer attenuator, in the cue position, operates a cue switch feeding a common bus connected to one pushbutton. A cue output from the program channel, via a 62dB pad, to a cue pushbutton is also provided.

The cue channel provides up to two Watts to the built-in speaker, with a front panel control providing level adjustment. A muting relay is included. A cue headset output bypasses the muting relay.

## UTILITY KEYS:

Three, three-position utility keys are supplied as standard equipment with provision to add three more as an extra-cost option. These are provided for dc control of external equipment and are not wired on the standard console.

# functional & installation

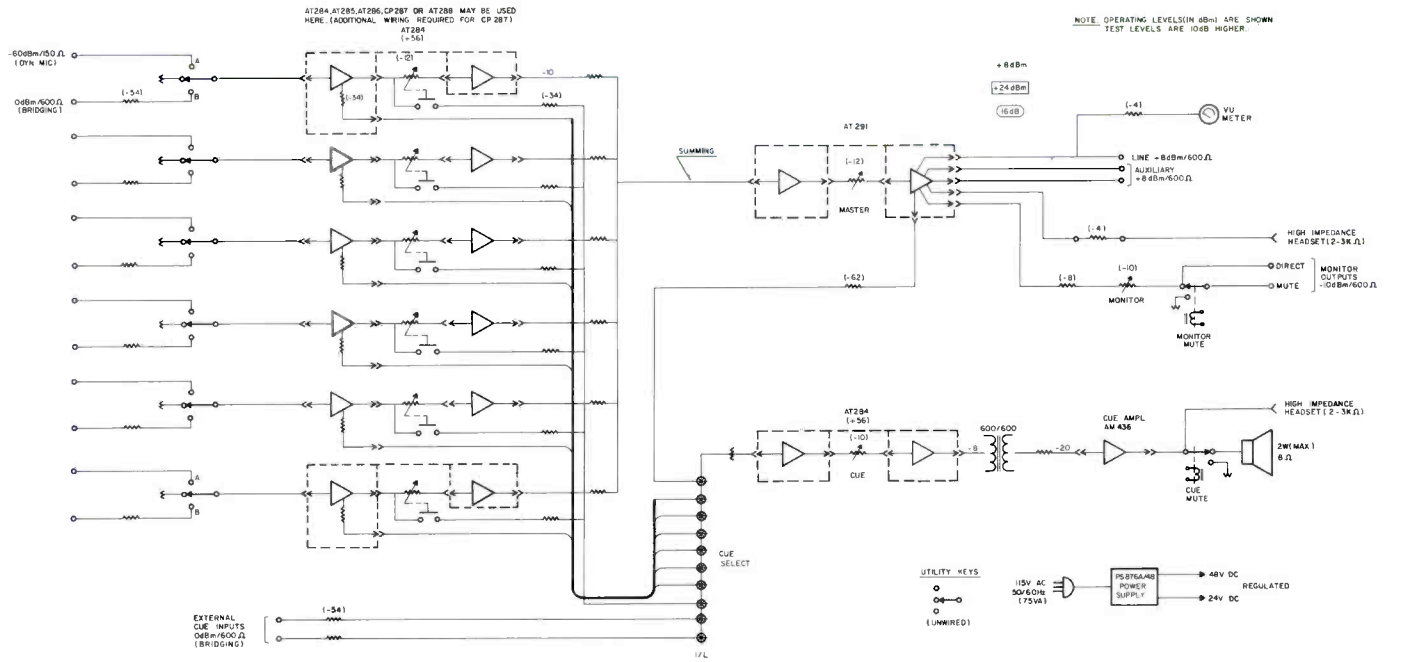


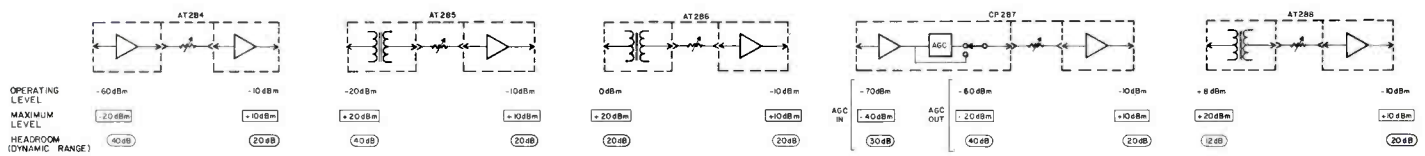


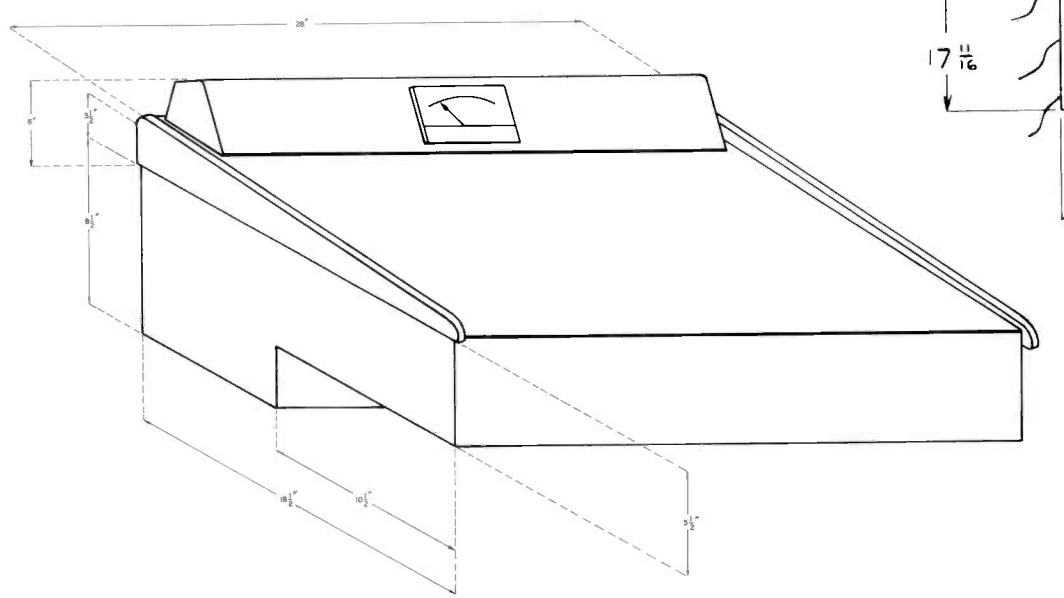


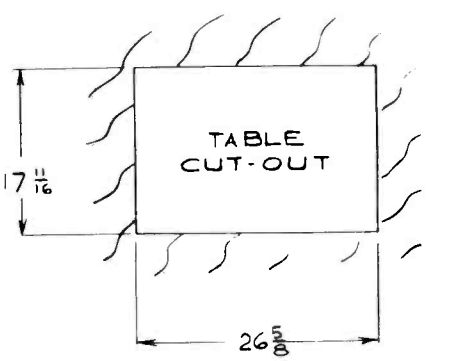

# specifications

NOMINAL LEVELS ARE SPECIFIED, WITH TEST LEVEL SHOWN IN BRACKETS ( ).

### INPUTS:

1) 12 mixer input selectable to six channels: —60dBm, 150 ohms (dyn. mic.); —20dBm, 600 ohms; 0dBm, 600 ohms; or +8dBm, 600 ohms.
2) Two external cue inputs; 0dBm (+10dBm), 600 ohms, bridging.

### OUTPUTS:

1) One program line output; +8dBm (+18dBm), 600 ohms, matching.
2) Two auxiliary outputs; +8dBm (+18dBm), 600 ohms, matching.
3) One program headset output; +4dBm, for use with high impedance headset.
4) One cue headset output; +4dBm, for use with high impedance headset.
5) One program monitor output; —10dBm (0dBm), 600 ohms, muting relay included.
6) One PA output; —10dBm (0dBm), 600 ohms.
7) Built-in cue speaker; 2 Watts maximum, 8 ohms.

### FREQUENCY RESPONSE:

For any input to program, monitor, or PA output at normal attenuator settings; ±1dB from 30Hz to 15kHz, reference 1kHz.

### NOISE:

Relative input noise; —122dBm, unweighted, measured over 10Hz to 100kHz bandwidth.

### HARMONIC DISTORTION: (at normal attenuator settings)

1) For any input to program output; 0.5% maximum from 30Hz to 15kHz at +18dBm output.
2) For any input to monitor output; 0.5% maximum from 30Hz to 15kHz at 0dBm output.

### TRANSIENTS:

(RMS) Better than 60dB below rated output (test level) when operating a relay or pushbutton.

### POWER REQUIREMENTS:

115Volt, 50/60Hz, single phase, 75VA

### AMBIENT TEMPERATURE:

0° to 55°C

### OVERALL DIMENSIONS:

28 in. (71.1 cm) wide, 18.5 in. (47 cm) deep, 6 in. (15.3 cm) high, plus 8.5 in. (21.6 cm) projection below desk top.

# ordering information

Contact your nearest McCurdy Radio office for price, application information and availability of optional equipment.



Printed in Canada

**McCURDY RADIO INDUSTRIES LIMITED**
108 CARNFORTH ROAD, TORONTO, ONTARIO M4A 2L4 (416) 751-6262, TELEX 06-963533, TWX 610-492-1373

**McCURDY RADIO INDUSTRIES INC.**
UNITED STATES HEAD OFFICE
1711 CARMEN DRIVE, ELK GROVE VILLAGE, ILLINOIS 60007, (312) 640-7077, TWX 910-222-0436
EAST COAST OFFICE
223 WEST SADDLE RIVER ROAD, SADDLE RIVER, N.J. 07458, (201) 327-0750, TWX 710-988-2254
BUFFALO WAREHOUSE
1051 CLINTON STREET, BUFFALO, N.Y. 14206, DIRECT LINE TO TORONTO PLANT (716) 854-6700, TWX 610-492-1373

McCurdy Radio Industries reserves the right, without notice to make such changes in equipment, design, specifications, or components as progress in engineering or manufacturing techniques may warrant to improve the performance of the product.

# SS4388B

# 8-mixer single-channel audio console

McCurdy

The SS4388B audio console is an eight-mixer single-channel console providing professional facilities for the mixing, monitoring and control of audio program material. The SS4388B is designed for installations not requiring the use of a full-size console, such as News Booth or Disc Jockey areas. In this regard, the SS4388B offers compactness and convenience while maintaining full broadcast specifications. These important features are achieved without over-miniaturization or crowding of internal and external components.

The SS4388B includes a comprehensive cue system and is self-powered by an internal, regulated, power supply. All amplifiers and the power supply are standard McCurdy plug-in modules incorporating proven silicon solid-state circuitry.

Operating controls are arranged for optimum separation combined with grouping of related functions, and recessed panels are provided for dc control switches (optional).

The SS4388B is designed for mounting in a desk top cutout (see dimensional outline diagram). The extremely low silhouette permits the operator an unobstructed view into adjoining areas, a desired feature in many installations.

The front panel presents a highly attractive appearance with a full-width VU meter housing and damage-resistant overlay of wood-grain vinyl. The VU meter housing and console end bells are constructed of solid, oiled walnut.

- Eight mixer channels equipped with preamplifiers and rotary step attenuators.
- Two inputs, selectable by input key, per mixer channel.
- Choice of five amplifiers for microphone or high-level applications. Microphone amplifier with AGC at additional cost.
- Balanced mixer bus.
- Complete cue system with ten-position pushbutton assembly, amplifier and speaker. Inputs can be cued individually or premixed, without readjusting input attenuators.
- Monitor control and feed for external monitor amplifier.
- Eleven silicon solid-state plug-in amplifiers and regulated power supply within console.
- Four additional unwired utility keys with provision to add four more.
- Four additional unwired utility keys with provision to add four more.
- As a special feature, provision is made for optional, console-mounting of recessed pushbuttons for remote control of external equipment, such as turntables, tape machines, etc.
- Above-desk dimensions; 6 in. high, 18.5 in. deep, 28 in. wide.

## FACILITIES:

The facilities of the SS4388B are shown in the block diagram. The console incorporates eight mixer channels, one program channel and a complete cue system, along with monitor and PA feeds.

## PROGRAM CIRCUITS:

Each mixer accommodates two inputs, selectable by a three-position lever key; the centre position of the key is a terminated 'off' position. The key selections are designated by means of designation strips, rather than engraving, so that the customer may designate these as desired.

The mixer channels employ amplifiers in the McCurdy AT280 series as required by the input configuration and level. Except for the input level accommodated, these amplifiers are directly interchangeable without wiring changes. The block diagram shows AT284 preamplifiers in use, with one low-level input and one high-level input. The complete range of amplifiers and their operating levels are shown on the diagram.

The mixing level is adjusted by means of premium quality rotary attenuators connected in the interstage sections of the amplifiers. The balanced mixer bus feeds the single program channel which uses a McCurdy AT291 program amplifier. The final output level is adjusted by means of a high-quality potentiometer controlling the gain of the AT291. Three program output splits are provided, consisting of one line output and two auxiliary outPuts, all at +8dBm, 600 ohms.

## MONITORING AND PA:

Continuous visual monitoring of the program channel is provided by a full-size A-scale illuminated VU meter. Local aural monitoring is available at a front-mounted jack for high impedance headsets. In addition, two —10dBm, 600 ohm outputs are provided for feeding external monitor and PA amplifiers. A muting relay for the monitor, and a common level control for both outputs are supplied as standard equipment. A complete ten Watt speaker-amplifier assembly is available to accommodate these outputs (model LSA609).

## CUE SYSTEM:

Each input amplifier provides a continuous cue output which is taken off ahead of the mixer attenuator. These outputs are fed to eight separate pushbuttons in the cue-select bank. Also, each mixer attenuator, in the extreme counterclockwise position, operates a cue switch which feeds a common bus connected to one pushbutton. A cue output from the program channel, via a 62dB pad, to a cue pushbutton is also provided.

The cue channel provides up to two Watts to the built-in speaker with a front panel control providing level adjustment. A muting relay is included in the circuit.

## UTILITY KEYS:

Four, three-position utility keys are supplied as standard equipment, with provision to add four more as an extra-cost option. These are provided for dc control of external equipment and are not wired on the standard console.

## OPTIONS:

Four recesses in the lower part of the front panel are designed to accommodate optional pushbutton assemblies for dc control of turntables, tapes, etc. McCurdy Radio Industries can supply these assemblies and has two standard configurations consisting of one pushbutton per channel or two pushbuttons per channel.

# functional & installation

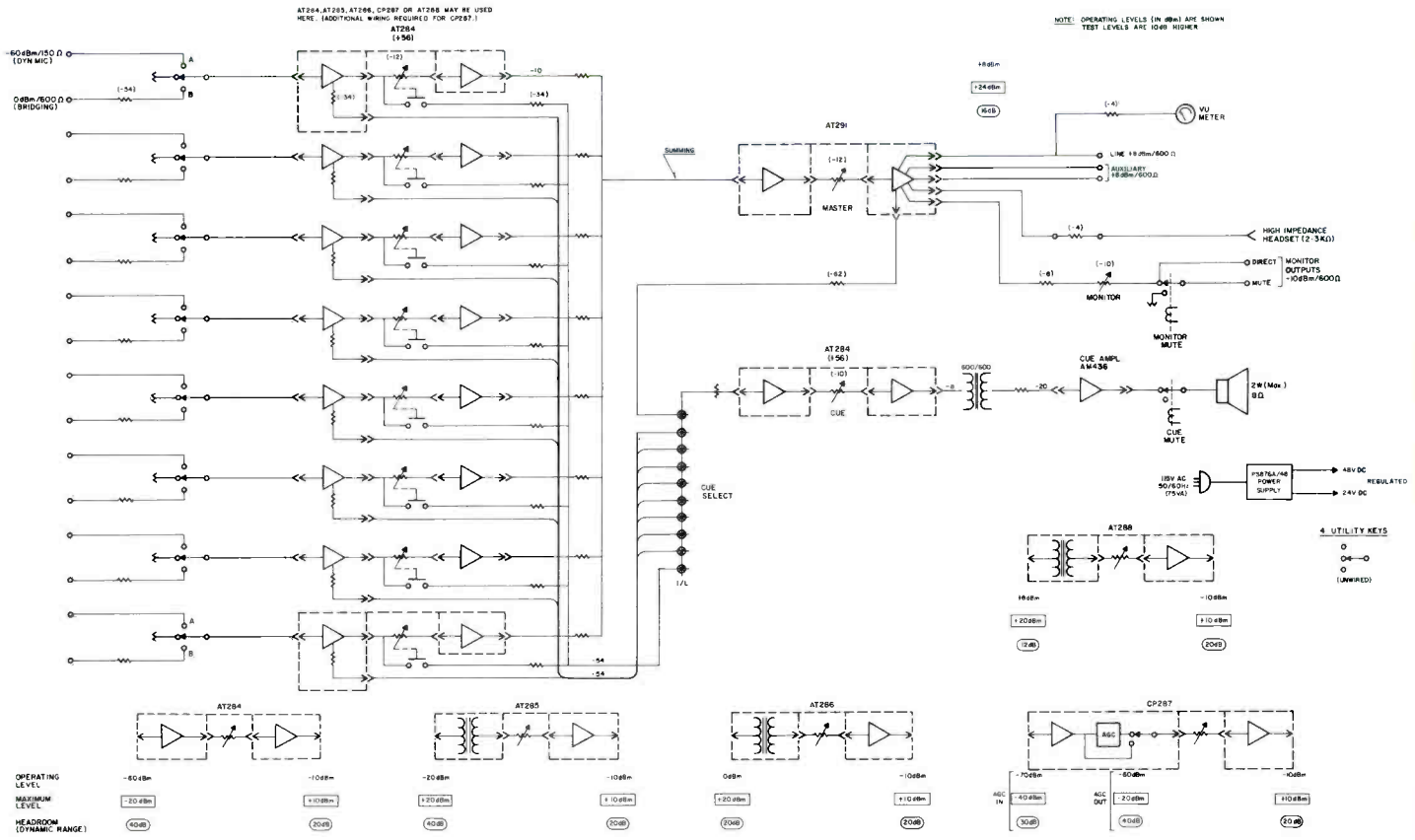


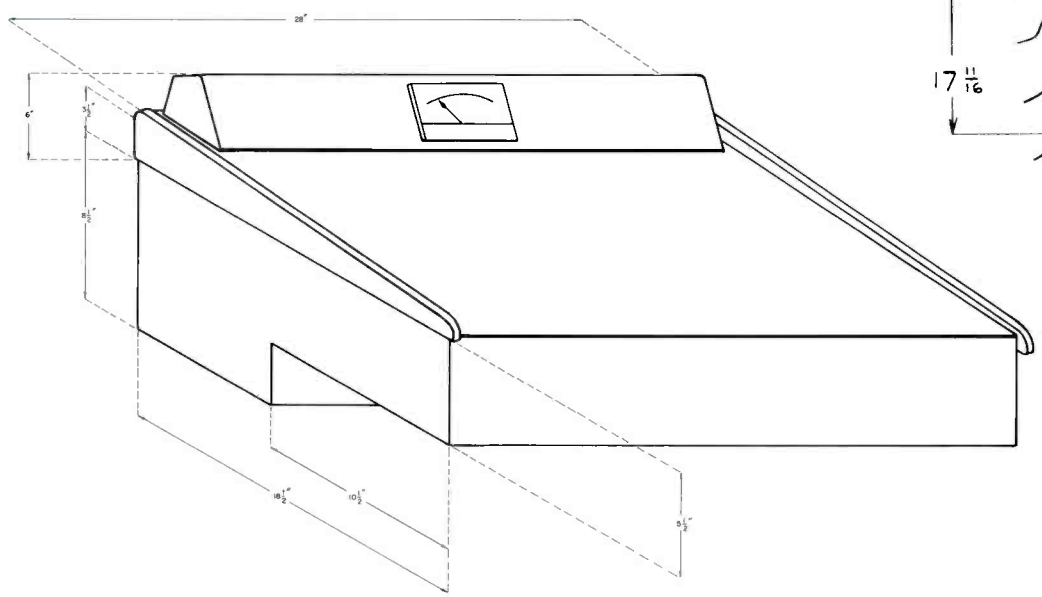


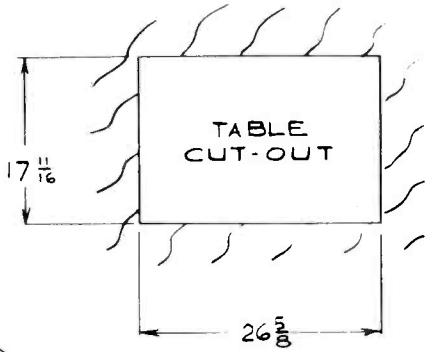

# specifications

NOMINAL LEVELS ARE SPECIFIED, WITH TEST LEVEL SHOWN IN BRACKETS ( ).

### INPUTS:

16 mixer inputs selectable to eight channels; —70dBm, 150 ohms (dyn. mic.); —60dBm, 150 ohms (dyn. mic.); —20dBm, 600 ohms; 0dBm, 600 ohms; or +8dBm, 600 ohms.

### OUTPUTS:

1) One program line output; +8dBm (+18dBm), 600 ohms, matching.
2) Two auxiliary outputs; +8dBm (+18dBm), 600 ohms, matching.
3) One program headset output; +4dBm, for use with high impedance headset.
4) One program monitor output; —10dBm (0dBm), 600 ohms, muting relay included.
5) One PA output; —10dBm (0dBm), 600 ohms.

### FREQUENCY RESPONSE:

For any input to program, monitor or PA output at normal attenuator settings; ±1dB from 30Hz to 15kHz, reference 1kHz.

### NOISE:

Relative input noise; —122dBm, unweighted, measured over 10Hz to 100kHz bandwidth.

### HARMONIC DISTORTION:

(at normal attenuator settings)

1) For any input to program output; 0.5% maximum from 30Hz to 15kHz at +18dBm output.
2) For any input to monitor output; 0.5% maximum from 30Hz to 15kHz at 0dBm output.

### TRANSIENTS:

(RMS) Better than 60dB below rated output (test level) when operating a relay or pushbutton.

### POWER REQUIREMENTS:

115 Volt, 50/60Hz, single phase, 75VA

### AMBIENT TEMPERATURE:

0° to 55°C

### OVERALL DIMENSIONS:

28 in. (71.1 cm) wide, 18.5 in. (47 cm) deep, 6 in. (15.3 cm) high, plus 8.5 in. (21.6 cm) projection below desk top.

# ordering information

Contact your nearest McCurdy Radio office for price, application information and availability of optional equipment.



Printed in Canada

**McCURDY RADIO INDUSTRIES LIMITED**
108 CARNFORTH ROAD, TORONTO, ONTARIO M4A 2L4 (416) 751-6262, TELEX 06-963533, TWX 610-492-1373

**McCURDY RADIO INDUSTRIES INC.**
UNITED STATES HEAD OFFICE
1711 CARMEN DRIVE, ELK GROVE VILLAGE, ILLINOIS 60007, (312) 640-7077, TWX 910-222-0436
EAST COAST OFFICE
223 WEST SADDLE RIVER ROAD, SADDLE RIVER, N.J. 07458, (201) 327-0750, TWX 710-988-2254
BUFFALO WAREHOUSE
1051 CLINTON STREET, BUFFALO, N.Y. 14206, DIRECT LINE TO TORONTO PLANT (716) 854-6700, TWX 610-492-1373

McCurdy Radio Industries reserves the right, without notice to make such changes in equipment, design, specifications, or components as progress in engineering or manufacturing techniques may warrant to improve the performance of the product.

# SS4360

# SOLID-STATE MONAURAL DUAL CHANNEL AUDIO CONSOLE

SS4360 Dual Channel Audio Console

- Accommodates 34 program sources, selectable to 10 mixing channels.
- Any mixer can be high or low-level, depending on choice of plug-in module.
- Completely self-contained (no external power supply, monitor amplifier or muting relays are required).
- Integral full 10-watt capability control room monitor amplifier with provision for optional (integral) studio monitor.
- Control room and studio monitors and B-Channel VU meter switchable to external sources.
- Pre-mixer assembly available to economically expand input mixing facilities.
- Contemporary design features elegant appearance combined with functional positioning of operating controls.

SS4361 Announce Turret

## DESCRIPTION

The SS4360 is a fully transistorized, self-contained audio console designed for professional use in broadcast and recording applications. In addition to rugged construction and high performance specifications, this console combines system engineering creativity with new styling appearance to achieve a console of exceptional dependability and versatility. The control panel introduces contoured control knobs designed by McCurdy Radio Industries to accommodate the most desirable features required to allow smooth finger-tip operation.

The functional block diagram illustrates the facilities provided in the SS4360. The console comprises 10 mixing channels, two program channels, control room and studio monitors with associated muting relays, and a comprehensive cue and talkback system. The console system operates from a self-contained power supply with

McCURDY RADIO INDUSTRIES LIMITED
108 CARNFORTH ROAD — TORONTO 16 — CANADA
(416) 751-6262
TELEX 02-21660
1051 CLINTON STREET — BUFFALO — N.Y. 14206
(716) 854-6700
McCURDY RADIO INDUSTRIES INCORPORATED

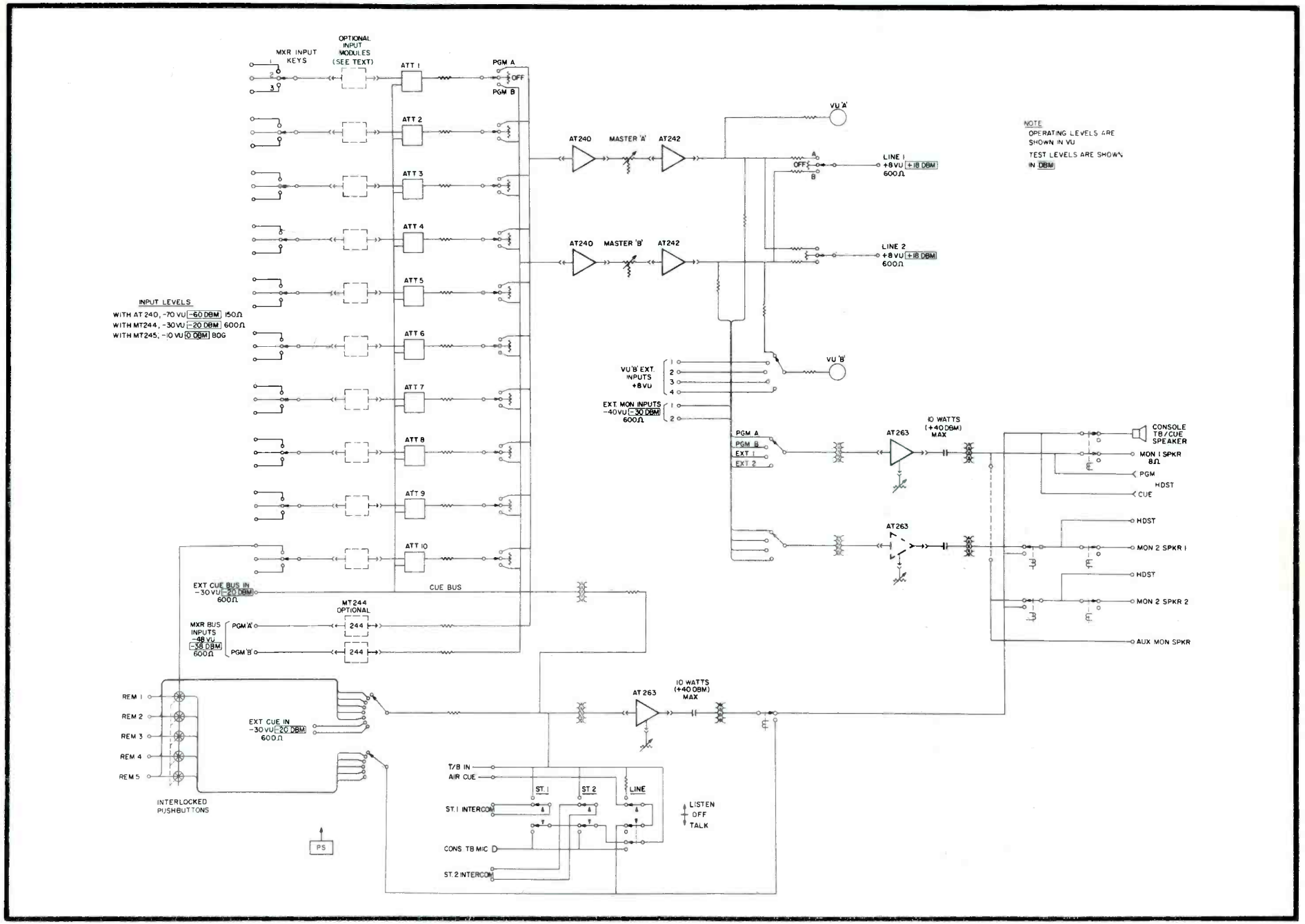


Functional Block Diagram

individual regulated outputs for program amplifiers, cue amplifiers, and monitor amplifiers.

Mixer positions 1 through 9 are provided with 3-position input selector switches. Mixer position 10 incorporates a 5-station pushbutton selector in addition to the 3-position selector key, and is designed and wired for remote lines. Any input mixing channel may be used for high or low-level operation by employing the proper plug-in input module. Low-impedance mixing circuits are utilized throughout with high quality ladder type rotary controls to ensure freedom from mixing noise and to achieve long-term dependability. Muting relays operate in conjunction with the input and mixing keys. Spare contacts prewired to terminal boards are included on all lever keys to permit wiring to additional external control circuitry.

Plug-in amplifier modules are employed within the console system and provide performance characteristics which exceed all accepted broadcast standards for frequency response, noise, distortion, and dynamic range. State-of-the art techniques combined with time-proven silicon transistor circuitry achieve excellent performance and dependability. Operating voltage for the amplifier modules is obtained from an integral solid-state power supply. Plug-in power regulator modules provide excellent DC regulation against line and load variations.

A comprehensive cue-intercom system is incorporated in the SS4360. Attenuators with cue positions are included for each mixing channel and a separate balanced input permits independent cueing with respect to remote line and talkback selector switches. The use of an internal separate talkback microphone and cue speaker produces excellent intelligibility and simplified switching. Instant communication with two studio locations and remote lines, without additional preselect controls, is provided by three lever keys conveniently located in the centre of the control panel. A balanced bridging input to the 10-watt amplifier enables a remote line to be monitored via the appropriate selector switch position. Additional external cue input positions are available on the remote line cue selector. An interlocked relay system routes the cue or talkback to the required location and prevents intercom use in live microphone areas.

The SS4360 accommodates two plug-in 10-watt program monitor amplifiers in addition to the cue amplifier. The control room monitor amplifier is supplied; the studio monitor amplifier is an available option. All input switching, output wiring, and muting circuitry associated with the studio monitor position is prewired and tested in the basic console. Both monitor channels provide balanced inputs switchable to either program channel or two external auxiliary inputs.

Program levels are continually monitored by two VU meters. The B channel VU meter may be selected to read four external program levels. Cue and monitor headset jacks are also provided.

Major amplifier and regulator components are fully modular and plug-in. The console front panel and top cover are hinged to permit immediate access to all components, amplifiers, and wiring. Incoming and out-going cables can be easily connected to turret-type solder terminals.

Flexibility of system modules, functional features, and a new design elegance combine to produce an audio console of unsurpassed performance and versatility.

## SPECIFICATIONS

MIXING CHANNELS

A total of 10 are provided using ladder attenuators with cue positions.

PROGRAM INPUTS

A total of 34 program sources may be connected to the input switching facilities of this console. Input channels 1 through 9 are provided with 3-position selector switches. Input channel 10 includes a 5-position pushbutton selector switch (to accommodate five remote lines) connected into one position of the 3-position selector key.

The ratio of low-level inputs to high-level inputs in this console is determined by the type of input module employed in each input channel. The characteristics of the three basic input modules available for input channel application in this console are as follows:

Low-Level Inputs - Equip with AT240 preamplifier module. -60 dbm nominal, -25 dbm max, 150 ohms balanced or unbalanced. (May be strapped for 37.5 ohms).

Matching High-Level Inputs - Equip with MT244 module. -20 dbm nominal, +18 dbm max, 600 ohms balanced or unbalanced. (May be strapped for 150 ohms).

Bridging High-Level Inputs - Equip with MT245 module. 0 dbm nominal, +24 dbm max, 5K/20K ohms balanced or unbalanced.

Aux. Inputs

(1) Two auxiliary mixer bus inputs, -38 dbm, 600 ohms, balanced. Each requires an MT244 module to function (not supplied).

(2) Two external control room monitor inputs, -16 dbm, 600 ohms, balanced.

(3) Four external VU meter inputs, +18 dbm, 600 ohms.

(4) Two external cue amplifier inputs, -20 dbm, 600 ohms, balanced.

(5) One external cue bus input, -30 dbm, 600 ohms, unbalanced.

OUTPUTS

(1) Two program lines, +18 dbm, 600 ohms, selectable to program output A or B via output selector keys.

(2) The basic 10-watt monitor channel (8 ohms out) includes relay muting of two lines (a third may be obtained with a jumper connection) plus one unmuted monitor line.

(3) One auxiliary monitor line (unmuted) +40 dbm max (10 watts), 8 ohms.

(4) Four headset outputs, 0.77 volts, 5000 ohms; one cue output, one control room monitor circuit, and two studio monitor feed circuits.

GAIN (±2 db)

(1) Microphone input to program output, 102 db.

(2) High-level input to program output, 62 db.

(3) Remote line input to program output, 62 db.

(4) Microphone input to monitor output, 136 db.

FREQUENCY RESPONSE (ref 1 khz)

(1) For any input to program output at normal attenuator settings:

(a) Within ± 1.5 db, 20 hz to 20 khz.

(b) Within ± 1 db, 30 hz to 15 khz.

(2) For any input to monitor output at normal attenuator settings (with 12 db setting loss):

(a) Within ± 2 db, 30 hz to 20 khz.

(b) Within ± 1.5 db, 30 hz to 15 khz.

NOISE

(1) Relative input noise (microphone channels): -122 dbm, unweighted, measured over 10 hz to 100 khz bandwidth.

(2) Signal-to-noise ratio (high-level channels); 68 db below +18 dbm output level with normal attenuator settings.

HARMONIC DISTORTION

(1) For any input to program output at normal attenuator settings: Less than 1%, 30 hz to 20 khz measured at +18 dbm output level.

(2) For any input to monitor output at normal attenuator settings: Less than 1%, 50 hz to 15 khz measured at +40 dbm (10 watts) output level.

CROSSTALK (nominal)

At least 60 db below +18 dbm output level, when feeding one channel and measuring on unused channel, with normal attenuator settings, 30 hz to 15 khz.

POWER REQUIREMENTS

117/230v ac, 50/60 hz, single phase, 40 va. (Normally connected for 117v operation).

AMBIENT TEMPERATURE

0° C to 55° C.

OVERALL DIMENSIONS

48 inches wide, 9 inches high, 20 inches deep.

WEIGHT

Console less plug-in components: 144 lb.

## ORDERING INFORMATION

(1) The basic SS4360 console includes:

One 10-watt monitor amplifier.
One 10-watt cue amplifier.
Two program output amplifiers plus power supply components.
Less all input modules.

(2) Specify, for a total of 10, the following input options:

AT240 Microphone Preamplifier.
MT244 Matching Input Transformer.
MT245 Bridging Input Transformer.

ACCESSORIES

(1) AT-263/2 additional 10-watt Monitor Amplifier assembly (includes bridging input transformer and regulator).

(2) SS4361 Announce Turret.

(3) SS4408 Turntable Remote Control Panel.

(4) SS4409 Reel Tape Remote Control Panel.

(5) SS4410 Cartridge Tape Remote Control Panel.

(6) SS4360-1 Control Desk and Pedestals.

(7) SA600 Warning Light Relay Panel.

The SS4360 console is also available in a complete custom-engineered studio package complete with announce turret, turntables, cartridge tapes, and reel tapes. Write for more details.

For stereo applications please request the SS4370 brochure.

TRANSIENTS The operation of any relay in the console will not degrade the noise figure by more than 6 db.

*McCurdy Radio Industries reserves the right, without notice, to make such changes in equipment, design, specifications, or components as progress in engineering or manufacturing techniques may warrant to improve the performance of the product.*

# SS4370

# 8 MIXER STEREO DUAL CHANNEL AUDIO CONSOLE

SS4370 8 Mixer Stereo Audio Console

- Accommodates 28 stereo program sources selectable to 8 mixing channels.
- Any mixer can be high or low-level depending on choice of plug-in module.
- Completely self-contained (no external power transformer, monitor amplifier, or muting relays required).
- Integral full 10-watt capability stereo control room monitor amplifiers with provision for connecting additional studio speakers.
- Control room monitors and VU meters switchable to external sources.
- Comprehensive cue and talkback facilities included.
- Contemporary design features elegant appearance combined with functional positioning of operating controls.

SS4371 Announce Turret

## DESCRIPTION

The SS4370 is a fully transistorized, self-contained stereo audio console designed for professional use in FM broadcast and stereo recording applications. In addition to rugged construction and high performance specifications, this console combines system engineering creativity with new styling appearance to achieve a console of exceptional dependability and versatility. The control panel utilizes contoured control knobs designed by McCurdy Radio Industries to accommodate the most desirable features required to allow smooth finger-tip operation.

The functional block diagram illustrates the facilities provided in the SS4370. The console comprises 8 full-stereo mixing channels, a left and right stereo output channel, an optional composite mono-output channel, optional stereo record output channel, stereo control room and studio speaker monitor outputs with associated muting relays, and a comprehensive cue and talkback system. The console system operates from a self-contained power supply with individual regulated outputs for left and right stereo channels and monitor amplifiers.

McCURDY RADIO INDUSTRIES LIMITED
108 CARNFORTH ROAD — TORONTO 16 — CANADA
(416) 751-6262
TELEX 02-21660

McCURDY RADIO INDUSTRIES INCORPORATED
57 N. PUTNAM ST. — DANVERS — MASS. — 01923
(617) 774-6411

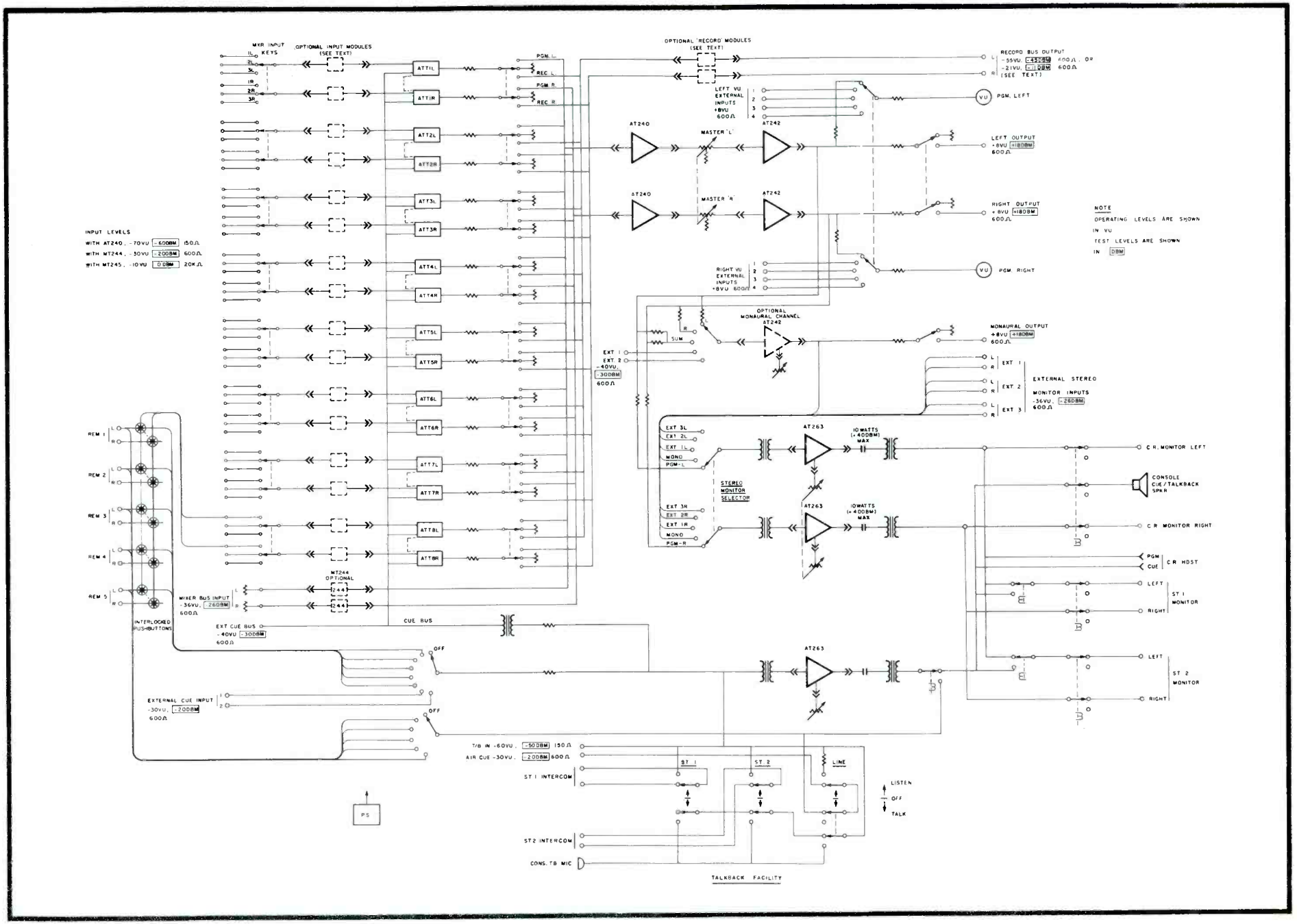


SS4370 Functional Block Diagram

Mixer positions 1 through 7 are provided with 3-position stereo input selector switches. Mixer position 8 incorporates a 5-station stereo pushbutton selector in addition to the 3-position stereo selector key, and is designed and wired for remote lines. Any input pair of mixing channels may be used for high or low-level operation by employing the proper plug-in input modules. Low-impedance stereo mixing circuits are utilized throughout with high quality ladder type rotary controls to ensure freedom from mixing noise and to achieve long-term dependability. Muting relays operate in conjunction with the input and mixing keys, which are wired to a terminal block for optional strapping by the customer. Spare contacts prewired to terminal boards are included on all the lever keys to permit wiring to additional external control circuitry. (All mixer bus keys are wired for two-position stereo operations plus a center OFF position. In one position the mixer feeds the stereo program bus; in the other position the mixer feeds a stereo record bus.)

Plug-in amplifier modules are employed within the console system and provide performance characteristics which exceed all accepted broadcast standards for frequency response, noise, distortion, and dynamic range. State-of-the art techniques combined with time-proven silicon transistor circuitry achieve excellent performance and dependability. Operating voltage for the amplifier modules is obtained from an integral solid-state power supply. Plug-in power regulator modules provide excellent DC regulation of line and load variations.

A comprehensive monaural cue-intercom system is incorporated in the SS4370. Attenuators with cue positions are supplied in each mixing channel and a separate unbalanced input permits independent cueing with respect to remote line and talkback selector switches. The use of an internal separate talkback microphone and cue speaker produces excellent intelligibility and simplified switching. Instant communication with two studio locations and stereo remote lines, without additional preselect controls, is provided by three lever keys conveniently located in the center of the control panel. A balanced bridging input to the 10-watt cue amplifier enables a remote line to be monitored via the appropriate selector switch position. Additional external cue input positions are available on the remote line cue selector. An interlocked relay system routes the cue or talkback to the required location and prevents use in live microphone areas.

The SS4370 contains a high quality stereo monitoring system comprising two plug-in 10-watt amplifier modules in addition to the 10-watt cue amplifier. A ganged gain control and selector switch provide the necessary balanced stereo monitoring facility. The selector switch permits stereo monitoring of program transmission or three external stereo inputs. A "mono" position permits monitoring of the monaural output amplifier. The dual monitor amplifiers basically provide stereo monitoring facilities with relay muting circuitry for the control room speakers. Additional relay muted circuits are provided from these monitor amplifiers to feed Studio or Announce Booth monitor speakers. Where a more flexible stereo monitoring system is required for a studio or announce booth, the installation of an external pair of monitor amplifiers, such as the McCurdy model AM411, is recommended.

Program levels are continuously monitored by two VU meters, and cue and monitor headset jacks. VU selector functions are in stereo with four external meter positions provided.

Additional facilities include provisions for an optional monaural output channel which is switchable to L, R or SUM signals, plus two external inputs.

Major amplifier and regulator components are fully modular and plug-in. The console front panel and top cover are hinged to permit immediate access to all components, amplifiers, and wiring. Incoming and outgoing cables can be easily connected to turret-type solder terminals.

Flexibility of system modules, functional features, and a new design elegance combine to produce a stereo console of unsurpassed performance and versatility.

## SPECIFICATIONS

STEREO MIXING CHANNELS

A total of 8 are provided using ladder attenuators with cue positions.

PROGRAM INPUTS

A total of 28 stereo program sources may be connected to the input switching facilities of this console. Input channels 1 through 7 are provided with 3-position selector switches. Input channel 8 includes a 5-position pushbutton selector switch (to accommodate five remote lines) connected into one position of the 3-position selector key.

The ratio of low-level inputs to high-level inputs in this console is determined by the type of input modules employed in each input channel. The characteristics of the three basic input modules available for input channel application in this console are as follows:

Low Level Inputs - Equip with two AT240 preamplifier modules: -60 dbm nominal, -25 dbm max, 150 ohms balanced or unbalanced (May be strapped for 37.5 ohms).

Matching High Level Inputs - Equip with two MT244 modules: -20 dbm nominal, +18 dbm max, 600 ohms balanced or unbalanced (May be strapped for 150 ohms).

Bridging High Level Inputs - Equip with two MT245 modules: 0 dbm nominal, +24 dbm max, 5K/20K ohms balanced or unbalanced.

AUX. INPUTS

(1) Two auxiliary program mixer bus inputs L and R, -26 dbm, 600 ohms, balanced. Each requires an MT244 input module to function (not supplied).

(2) Three external control room monitor inputs, -26 dbm, 600 ohms, balanced.

(3) Four external VU meter inputs to 'L' and 'R' VU circuits, +18 dbm, 600 ohms.

(4) Two external cue amplifier inputs, -20 dbm, 600 ohms balanced.

(5) One external cue bus input, -30 dbm, 600 ohms, unbalanced.

(6) Two external mono amplifier inputs, -30 dbm, 600 ohms.

OUTPUTS

(1) One stereo program line, +18 dbm, 600 ohms.

(2) One monaural program line, +18 dbm, 600 ohms (optional)

(3) One stereo record line, -45 dbm, 600 ohms balanced, using 2-MT244 output modules; -11 dbm, 600 ohms, (unbalanced) with 2-AT240 output modules.

(4) Three stereo monitor lines, +40 dbm (10 watts), 8 ohms: One Control Room, one Studio 1, one Studio 2, each equipped for independent relay muting.

(5) Two interlocked studio intercom outputs, +40 dbm (10 watts), 8 ohms.

(6) Two headset outputs, 0.77 volts, 5000 ohms: One Control Room stereo monitor, one Cue output.

GAIN (±2 db)

(1) Microphone input to program output, 102 db.

(2) High-level input to program output, 62 db.

(3) Remote line input to program output, 62 db.

(4) Microphone input to monitor output, 136 db.

FREQUENCY RESPONSE (ref 1 khz)

(1) For any input to program output at normal attenuator settings:

(a) Within ± 1.5 db, 20 hz to 20 khz.

(b) Within ± 1 db, 30 hz to 15 khz.

(2) For any input to monitor output at normal attenuator settings (with 12 db setting loss):

(a) Within ± 2 db, 30 hz to 20 khz.

(b) Within ± 1.5 db, 30 hz to 15 khz.

NOISE

(1) Relative input noise (microphone channels): -122 dbm unweighted, measured over 10 hz to 100 khz bandwidth.

(2) Signal to noise ratio (high-level channels): 68 db below +18 dbm output level with normal attenuator settings.

HARMONIC DISTORTION

(1) For any input to program output at normal attenuator settings: Less than 1%, 30 hz to 20 khz measured at +18 dbm output level.

(2) For any input to monitor output at normal attenuator settings: Less than 1%, 50 hz to 15 khz measured at +40 dbm (10 watts) output level.

CHANNEL SEPARATION (CROSSTALK)

At least 60 db below +18 dbm output level, when feeding one channel and measuring on unused channel, with normal attenuator settings, 30 hz to 15 khz.

POWER REQUIREMENTS

117/230v ac, 50/60 hz, single phase, 40 va. (normally connected for 117v operation).

AMBIENT TEMPERATURE

0° C to 55° C.

OVERALL DIMENSIONS

48 inches wide, 9 inches high, 20 inches deep.

WEIGHT

Console less plug-in components: 144 lb.

## ORDERING INFORMATION

(1) The basic SS4370 console includes:

One 10-watt stereo monitor amplifier system.
One 10-watt cue amplifier.
Two program output amplifiers, booster amplifiers, and necessary power supply components.
Less all input modules.

(2) Specify, for a total of 16, the following input options (in pairs)

AT240 Microphone Preamplifier.
MT244 Matching Input Transformer.
MT245 Bridging Input Transformer.

OPTIONS

Monaural output channel: One AT242 program amplifier.

Record output channel: Two AT240 booster amplifiers or two MT244 isolation transformer modules.

ACCESSORIES

(1) SS4371 Announce Turret

(2) SS4360-1 Control Desk and Pedestals.

(3) SA600 Warning Light Relay Panel.

(4) SS4408 Turntable Remote Control Panel.

(5) SS4409 Reel Tape Remote Control Panel.

(6) SS4410 Cartridge Tape Remote Control Panel.

(7) AM411 Dual Monitor Amplifier Assembly.

The SS4370 console is also available in a complete custom-engineered stereo studio package complete with announce turret, turntables, cartridge tapes, and reel tapes. Write for more details.

For monaural applications please request the SS4360 brochure.

TRANSIENTS The operation of any relay in the console will not degrade the noise figure by more than 6 db.

*McCurdy Radio Industries reserves the right, without notice, to make such changes in equipment, design, specifications, or components as progress in engineering or manufacturing techniques may warrant to improve the performance of the product.*

# SS4380 SOLID-STATE AUDIO BOOTH CONSOLE

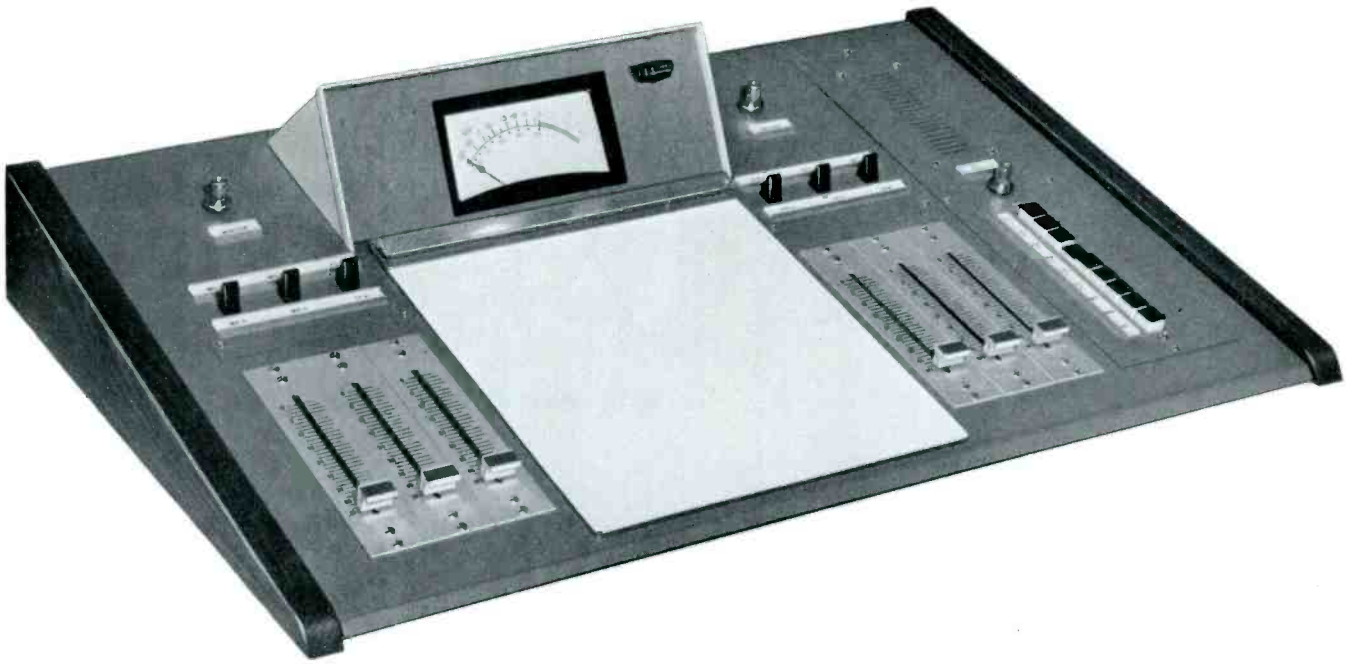

- Six mixers, normally consisting of two microphone and four high level.
- Completely self-contained, including power supply, 10-watt monitor, and speaker muting relay.
- Professional slider attenuators and full-size vu meter.
- Plug-in modules used for all major components - silicon solid-state circuitry throughout.
- Optional units include audio-follow-video switcher and pushbutton cue panel.
- Built-in script board. Walnut end bells add to attractive functional design. Made for desk-top mounting.

## DESCRIPTION

The SS4380 Solid-State Audio Booth Console presents a new approach to audio console design, from both the physical and electronic standpoints. The SS4380 is a six-mixer console designed for small installations where a full-size console is not required, and is ideally suited for the announcer-operated booth.

The overall design of the SS4380 presents a compact, attractive, and functional unit at moderate cost, without sacrifice of quality or utility. In spite of its small size, the SS4380 is completely self-contained with integral power supply, 10-watt monitor, and muting

McCURDY RADIO INDUSTRIES LIMITED
108 CARNFORTH ROAD — TORONTO 16 — CANADA
(416) 751-6262
TELEX 02-21660

McCURDY RADIO INDUSTRIES INCORPORATED
1051 CLINTON STREET — BUFFALO — N.Y. 14206
(716) 854-6700

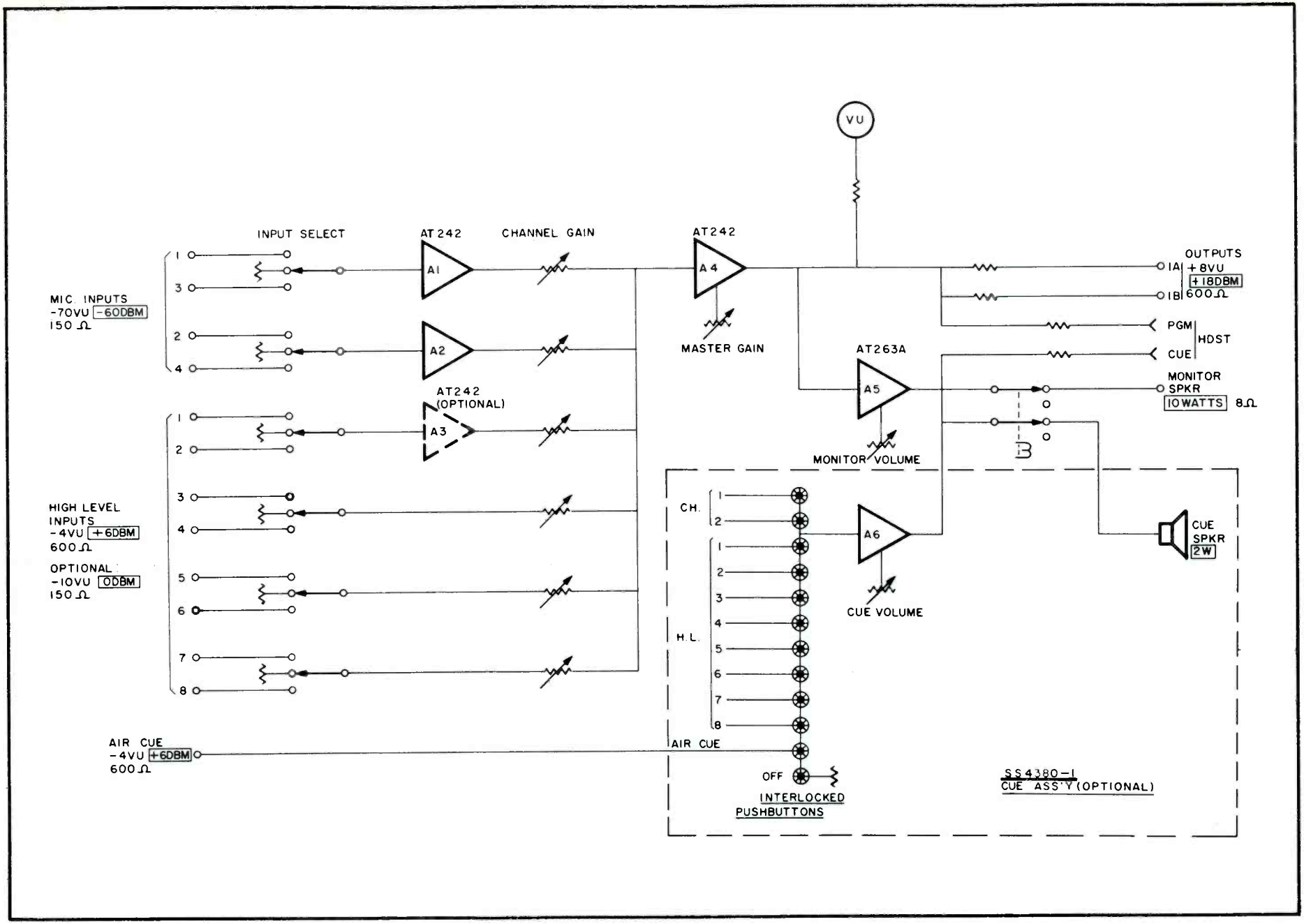


SS4380 Functional Block Diagram

circuit. All modules are silicon, solid-state, plug-in units of the highest quality and incorporate proven circuitry. The attenuators are professional, constant-impedance, slider type providing smooth, uniform operation.

The console is designed for mounting in a cutout in a desk top, and projects only 5 inches below the desk top. The compatible color scheme of brushed anodized aluminum and textured acrylic blue is further enhanced by genuine walnut end panels. A central script board with roller-type script holder adds that extra touch to an already impressive design.

## FACILITIES

The block diagram shows the facilities of the SS4380. The console includes six mixer channels, one program channel, and one 10-watt monitor amplifier as standard equipment.

### Program Circuits

Each mixer can accommodate two inputs, selectable by a three-position input key (INPUT 1/OFF/ INPUT 2). The first two mixers will accept levels of -70 vu, 150 ohms, via built-in preamplifiers which raise the signal to a level suitable for mixing. The remaining four channels are high level (-4 vu, 600 ohms) and feed the mixing bus directly. Constant-impedance, stepped attenuators adjust the levels fed to the mixer bus. As an option, Mixer No. 3, which is normally high level, may be fitted with a preamplifier for conversion to a microphone channel.

### Monitoring

Continuous visual monitoring of the program output (+8 vu, 600 ohms) is provided by a full-size, A-scale, illuminated vu meter. In addition, speaker monitoring is obtained from an AT263 10-watt Monitor Amplifier, which is included as standard equipment. The output transformer is optional, and normally is required only for long speaker runs. The speaker muting circuit consists of a relay and a unique transistorized switching circuit which effectively eliminates all transients. Convenient dual headset jacks allow monitoring of program and cue outputs.

## OPTIONS

### SS4380-1 Cue Assembly

The optional SS4380-1 Cue Assembly mounts on a panel to the right of the SS4380 control panel. This self-contained unit utilizes pushbutton selection of up to twelve inputs and incorporates its own amplifier, speaker, and regulated power supply. A unique feature of the cue assembly is that it permits cueing of inputs before the console mixer selector key; this prevents accidental 'cueing on air' since it does not act on the console circuit itself. An output is provided to the cue headset jack.

### SS4380-2 Audio-Follow-Video Switcher

This optional unit consists of a relay assembly utilizing up to eight plug-in relays. These are wired in parallel with the mixer input selector keys, duplicating their action. This allows remote input control by an external control panel or switcher. The normal control voltage required is 24v dc. The relay coils are fully suppressed to eliminate switching transients.

# SPECIFICATIONS

### INPUTS

(1) Four microphone inputs, -70 vu (-60 dbm) 150 ohms, selectable to two mixer channels by three-position keys.

(2) Eight high level inputs, -4 vu (+6 dbm) 600 ohms, selectable to four mixer channels by three-position keys.

(3) One air cue input, -4 vu (+6 dbm) 600 ohms, to optional cue system.

### OUTPUTS

(1) Two fixed program outputs, +8 vu (+18 dbm) 600 ohms.

(2) One program headset output, 1 volt into 5K load.

(3) One program monitor output, 10 watts, 8 ohms. Muting relay included.

### MAXIMUM GAIN (±1 db)

(1) Microphone input to program output: 102 db.

(2) High level input to program output: 36 db.

### FREQUENCY RESPONSE (ref 1 khz)

(1) For any input to program output at normal attenuator settings: Within ±1 db 30 hz to 20 khz.

(2) For any input to monitor output at normal attenuator settings: Within ±1 db 50 hz to 15 khz.

### NOISE

(1) Relative Input Noise: -122 dbm, unweighted, measured over 10 hz to 100 khz bandwidth at -3 db points.

(2) Signal-to-Noise: 62 db below +18 dbm output level with normal attenuator settings.

### HARMONIC DISTORTION (at normal attenuator settings)

(1) For any input to program output: Less than 1%, 30 hz to 20 khz, at +18 dbm output level.

(2) For any input to monitor output: Less than 1.5%, 30 hz to 15 khz, at +40 dbm (10 watts) output level.

ISOLATION BETWEEN OUTPUTS

(1) A signal fed into output No. 1 will appear on output No. 2 at least 32 db below the impressed level.

(2) An open circuit or short circuit on any program output of the console will not affect the level of any other output by more than 0.25 db.

POWER REQUIREMENTS

117/230v ac, 50/60 hz, single phase, 40 va. Normally connected for 117v operation.

AMBIENT TEMPERATURE

0° C to 55° C.

OVERALL DIMENSIONS

28 in. (71.1 cm) wide, 18-1/2 in. (47 cm) deep, 6 in. (15.24 cm) high plus 5 in. (12.7 cm) projection below desk top.

WEIGHT

72 lb (32.7 kg).

## ORDERING INFORMATION

BASIC CONSOLE

The basic SS4380 comes equipped with:

(1) Two microphone-level mixers at 150 ohms.

(2) Four high-level mixers at 600 ohms.

(3) One 10-watt monitor channel.

OPTIONAL ACCESSORIES

(1) Extra preamplifier for optional channel 3 microphone input.

(2) SS4380-1 Cue Assembly.

(3) SS4380-2 Audio-Follow-Video system.

(4) MRI 3004 monitor output transformer.

*McCurdy Radio Industries reserves the right, without notice, to make such changes in equipment, design, specifications, or components as progress in engineering or manufacturing techniques may warrant to improve the performance of the product.*

# SS4388 8-MIXER SINGLE-CHANNEL AUDIO CONSOLE

- Eight mixer channels, all equipped with preamplifiers and rotary step attenuators.
- Two inputs per mixer channel, selectable by input keys.
- Ten amplifiers and regulated power supply within console, all plug-in modules and completely silicon solid-state.
- Four additional unwired utility keys with provision to add four more.
- Ten-position pushbutton cue assembly, complete with self-contained speaker amplifier.
- Monitor control and feed for external monitor amplifier.
- Special feature - provision for optional, console-mounting, recessed pushbuttons for remote control of external equipment such as turntables, tape recorders, etc.
- Desk-top dimensions 6 in. high, 18-1/2 in. deep, 28 in. wide.

McCURDY RADIO INDUSTRIES LIMITED
108 CARNFORTH ROAD — TORONTO 16 — CANADA
(416) 751-6262
TELEX 02-21660

McCURDY RADIO INDUSTRIES INCORPORATED
1051 CLINTON STREET — BUFFALO — N.Y. 14206
(716) 854-6700

# DESCRIPTION

The SS4388 Audio Console is an eight-mixer single-channel console providing professional facilities for the mixing, monitoring, and control of audio program material. The SS4388 is designed for installations not requiring the use of a full-size console, such as News Booth or Disc Jockey areas. In this regard, the SS4388 offers compactness and convenience while maintaining full broadcast specifications. These important features are achieved without over-miniaturization or crowding of internal and external components.

The SS4388 includes a comprehensive cue system and is self-powered by means of an internal, regulated, power supply. All amplifiers and the power supply are standard McCurdy plug-in modules incorporating proven silicon solid-state circuitry. Operating controls are arranged for optimum separation combined with grouping of related functions, and recessed panels are provided for dc control switches (optional).

The SS4388 is designed for mounting in a cutout in a desk top (see Dimensional Outline Diagram). The extremely low silhouette permits the operator an unobstructed view into adjoining areas - a desired feature in many installations.

The front panel presents a highly attractive appearance with its combination of light blue acrylic panels and dark blue plexiglas escutcheons. Genuine walnut end bells add contrast and enhance the overall quality of the design.

## FACILITIES

The facilities of the SS4388 are shown in the Block Diagram. The console incorporates eight mixer channels, one program channel, and a complete cue system, along with monitor and PA feeds.

### Program Circuits

Each mixer accommodates two inputs, selectable by a three-position lever key. One position selects a low-level input (-60 vu, 150 ohms) and the other position selects a high-level input (0 vu, 600 ohms); the center position of the key is a terminated 'off' position. The key selections are identified by means of designation strips, rather than engraving, so that the customer may designate these as desired.

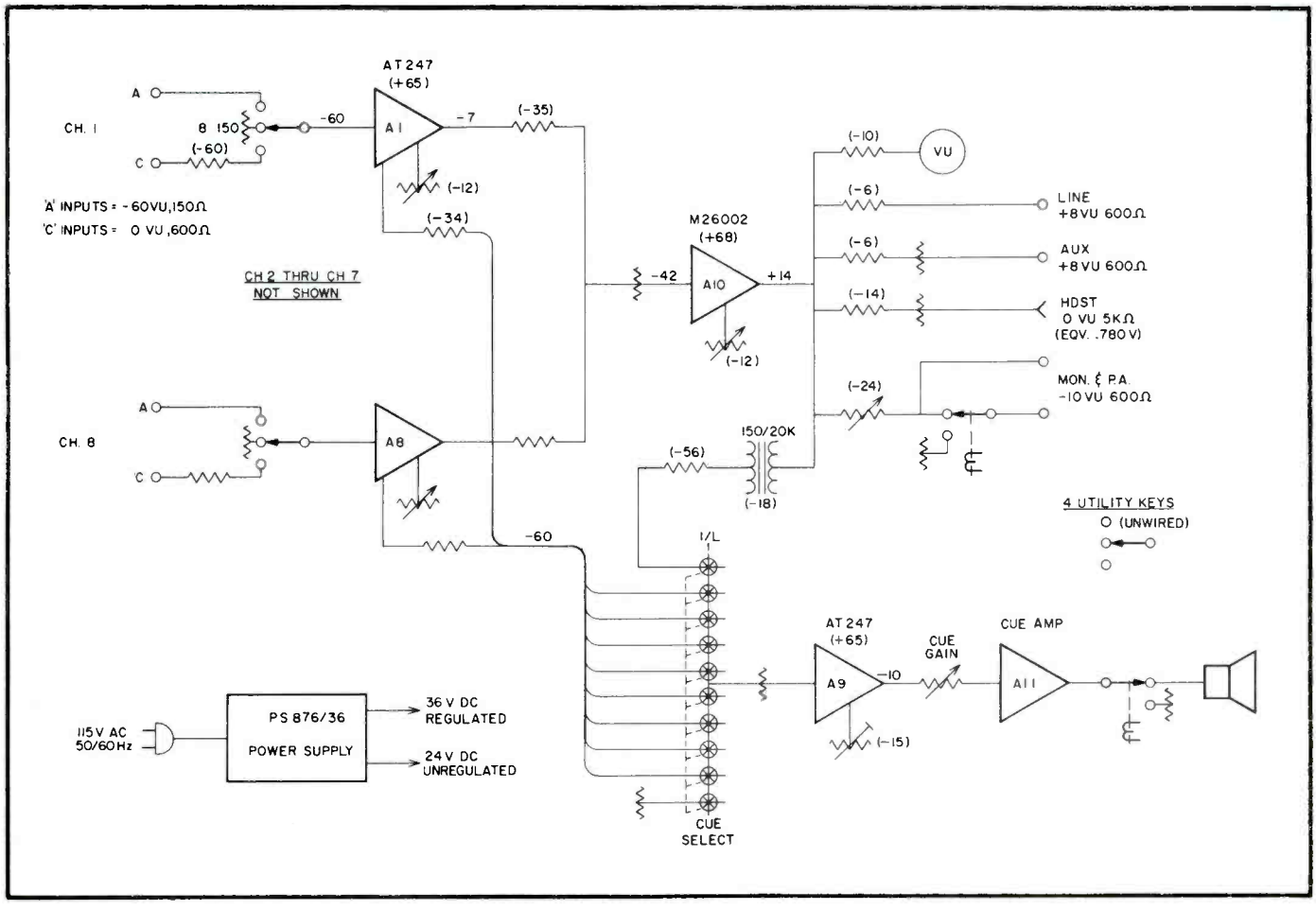


SS4388 Functional Block Diagram

The input channels employ McCurdy AT247 Amplifiers to raise the selected input audio to a suitable level for mixing. The mixing level is adjusted by means of premium-quality rotary attenuators which are connected in the interstage sections of the amplifiers.

The mixer bus feeds the single program channel which uses a McCurdy M26002 Program Amplifier. The final output level is adjusted by means of a high-quality potentiometer which controls the gain of the M26002. Two program output splits are provided, consisting of one Line output and one Auxiliary output, both at +8 vu, 600 ohms.

## Monitoring and PA

Continuous visual monitoring of the program channel is provided by a full-size A-scale illuminated VU meter. Local aural monitoring is available at a headset jack (0 vu, 5K) located on the front of the console. In addition, two -10 vu 600-ohm outputs are provided for feeding external monitor and PA amplifiers. A muting relay for the monitor, and a common gain control for both outputs, are supplied as standard equipment. A complete 10-watt speaker-amplifier system is available to accommodate this output (model LSA608 or LSA 609).

## Cue System

Each preamplifier provides a continuous cue output which is taken off ahead of the mixer attenuator. The program channel provides a cue output via a 20K bridging transformer. These outputs are coupled through high-isolation pads to the cue pushbutton assembly for selection to the cue channel. This channel provides up to 2 watts to the built-in cue speaker, with a front panel control providing level adjustment. A muting relay is included.

## Utility Keys

Four, three-position, utility keys are supplied as standard equipment, with provision to add four more as an extra-cost option. These can be used for dc control, intercom, etc. The utility keys are unwired on the standard console.

## OPTIONS

Four recesses in the lower part of the front panel are designed to accommodate optional pushbutton assemblies for dc control of turntables, tapes, etc. McCurdy has a complete line of these assemblies, plus an intercom key panel designed to fit these locations. (See Ordering Information).

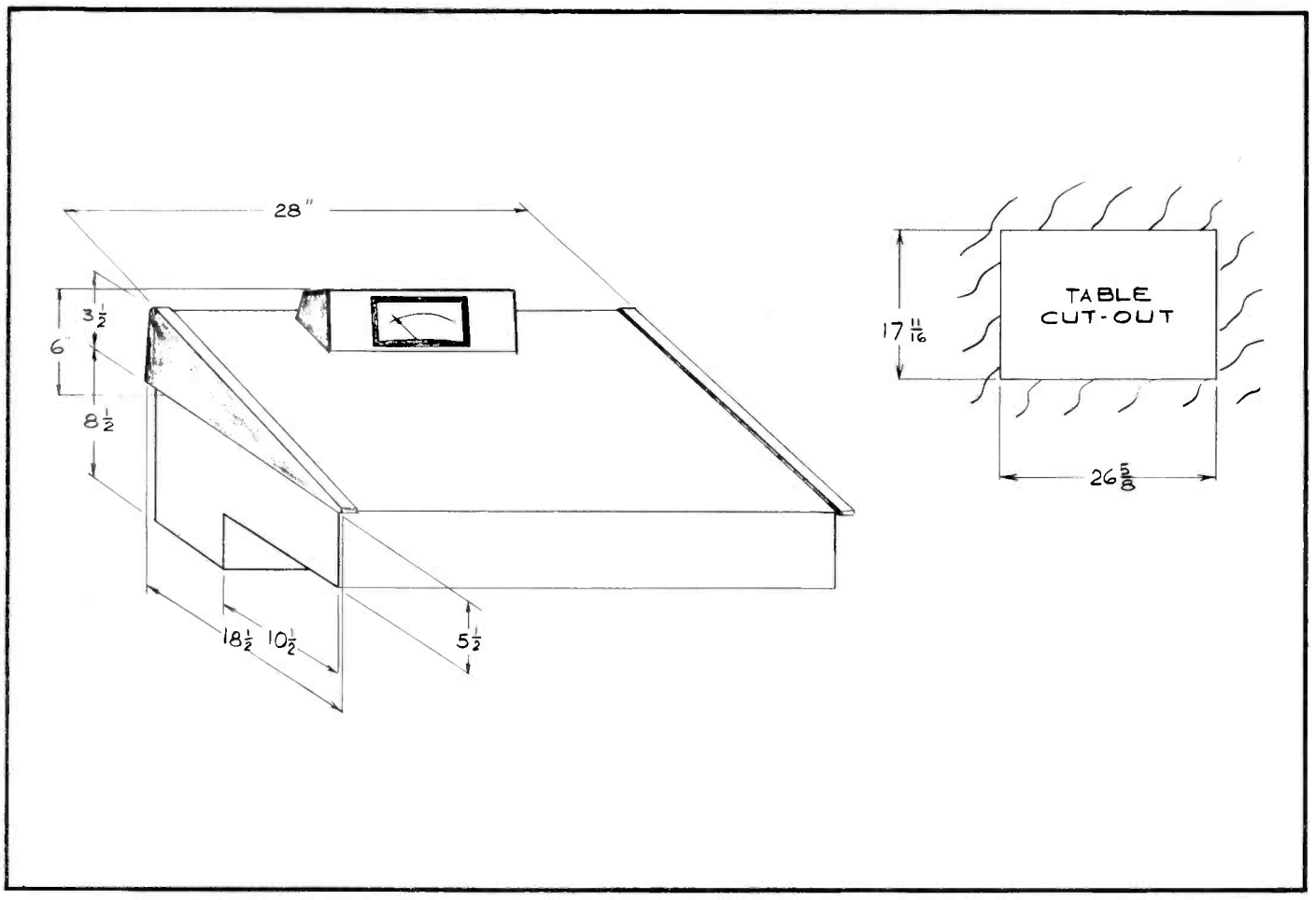


SS4388 Dimensional Outline

# SPECIFICATIONS

INPUTS

(1) Eight low-level inputs, -60 vu (-50 dBm) 150 ohms.

(2) Eight high level inputs, 0 vu (+10 dBm) 600 ohms.

OUTPUTS

(1) One program line output, +8 vu (+18 dBm) 600 ohms (matching).

(2) One auxiliary output, +8 vu (+18 dBm) 600 ohms (bridging).

(3) One program headset output, 0 vu (0.780v equiv.) 5,000 ohms.

(4) One program monitor output, -10 vu (0 dBm) 600 ohms. Muting relay included.

(5) One PA output, -10 vu (0 dBm) 600 ohms.

MAXIMUM GAIN (± 1 dB)

(1) Low-level input to program output: 92 dB.

(2) High level input to program output: 32 dB.

(3) Low level input to monitor output: 84 dB.

(4) High level input to monitor output: 24 dB.

FREQUENCY RESPONSE (ref 1 kHz)

For any input to program, monitor, or PA output at normal attenuator settings: ± 1 dB from 30 Hz to 15 kHz.

NOISE

Relative Input Noise: -122 dBm, unweighted, measured over 10 Hz to 100 kHz bandwidth at -3 dB points.

HARMONIC DISTORTION (at normal attenuator settings)

(1) For any input to program output: less than 0.5% from 30 Hz to 15 kHz at +18 dBm output.

(2) For any input to monitor output: less than 0.5% from 30 Hz to 15 kHz at 0 dBm output.

TRANSIENTS

The operation of any relay in the console will not degrade the noise figure by more than 6 dB.

POWER REQUIREMENTS

115 vac, 50/60 Hz, single phase, 30 va approximately.

AMBIENT TEMPERATURE

0°C to 55°C.

OVERALL DIMENSIONS

28 in. (71.1 cm) wide, 18-1/2 in. (47 cm) deep, 6 in. (15.24 cm) high plus 8-1/2 in. (21.6 cm) projection below desk top.

# ORDERING INFORMATION

STANDARD CONSOLE

The standard SS4388 Audio Console incorporates all the equipment shown in the Block Diagram.

OPTIONAL EQUIPMENT

(1) Turntable/Tape Control Pushbuttons. Space is provided for up to eight units (two per recessed panel). Each unit can be one or two pushbuttons, momentary, locking, or interlocking. Specify when ordering.

(2) Intercom Key Panel. Occupies one recessed panel and holds up to four three-position keys. Each key can be momentary or locking in either or both activated positions. Specify when ordering.

(3) Up to four extra Utility Keys. Specify desired configuration (momentary, locking, or combination of these).

(4) LSA608 or LSA609 10-Watt Speaker/Amplifier.

The price listed for the standard console does not include optional equipment nor the installation of optional equipment.

*McCurdy Radio Industries reserves the right, without notice, to make such changes in equipment, design, specifications, or components as progress in engineering or manufacturing techniques may warrant to improve the performance of the product.*

# SS7700 series

# modular audio production consoles

For TODAY'S BROADCAST INDUSTRY
and RECORDING STUDIOS

McCurdy

# description

The SS7700 Series of modular audio consoles provides complete professional facilities for mixing and shaping today's complex audio material. The equipment features modular construction, which combines an almost unlimited scope for customizing with maximum economy, a carefully thought-out control panel layout, based on providing maximum operating comfort and convenience in the minimum adequate space, performance specifications well within recognized broadcast standards, and, of course, a pleasing appearance.

In addition to complete program mixing, monitoring and control, SS7700 Series consoles provide PA feeds and comprehensive Solo/Cue, Echo-Send/Receive, Foldback and Talkback system facilities. A full range of options is also available including Equalizers, Compressors, Program Assign with Pan, and Remote Controls.

## EASY TO CUSTOMIZE AND EXPAND

The modular basis of SS7700 Series design makes it easy and economical to customize a console to meet the exact requirements of a particular application. Similarly, later expansion to a maximum of 26 functional channels (which may consist of almost any mix of input channels, submasters and masters) is simply a matter of installing the desired modules in prewired receptacles in the control panel. An optional companion housing styled similarly to the console is available to accommodate the ancillary equipments required for some applications.

## A PLEASURE TO OPERATE

SS7700 Series consoles are designed to provide the maximum degree of operating comfort and convenience, consistent with the realities of human and equipment dimensions. To the greatest extent possible, all controls are located in uncrowded groupings of related usage, within easy reach from a sitting position. All control knobs and switch buttons are large enough to permit positive, precise operation and are placed so that their operation does not interfere with adjacent controls. The large, easy-to-read VU meters are located in a low-silhouette panel which gives the operator an unobstructed view of adjoining areas.

## RELIABLE AND EASILY MAINTAINED

Field-proven McCurdy solid-state plug-in modules are used throughout the console. When servicing is required, the complete control panel hinges upward, providing maximum accessibility.

## ATTRACTIVE STYLING

While the philosophy behind the design of the SS7700 Series equipment has been to provide a superbly functional and flexible product, aesthetic aspects have not been neglected. The console end bells and the VU meter housing are made of richly-toned, hand-rubbed, oiled walnut. The surface of the control panel is finished in a woodgrain pattern overlay, surrounded by style strips of clear anodized aluminum which eliminates glare and reflections, and resists damage. A padded arm rest adds to both the appearance and the operating comfort of the console.

## FACILITIES AND OPTIONS

The standard and optional facilities of SS7700 Series consoles are illustrated in the functional block diagram on page 4.

## MIXER-CHANNEL INPUTS TO PROGRAM-CHANNEL OUTPUTS

A choice of six input modules including Echo-Return accommodates any mixer input level from —70 to +8 dBm nominal. Input sensitivity switches compensate for higher and lower input levels. The normal complement of input mixer-channels is up to 20 and may be expanded to 26 if required. The standard IM7701 Input Module in each mixer-channel nominally accepts microphone (low-level) inputs of —70 to —20 dBm and high-level inputs of —20 to +8 dBm, at impedance levels of 150 and 600 ohms respectively, with 40 dB dynamic range in reserve for microphone peaks. A sensitivity selector with phase reversal provides a convenient means of accommodating various inputs from microphone to line-level at the turn of a switch. The selector is calibrated for the most common level/impedance combinations used in the industry.

NOTE: The optional IM7702, IM7704, IM7705, and IM7706 High-Level Amplifier Input Modules accommodate input levels of —10 dBm nominal to +20 dBm maximum (depending on the attenuator setting used)/600 ohms matching. The optional IM7703 High-Level Bridging Input Module accommodates inputs of +8 dm nominal to +20 dBm maximum.

The mixer output level in each channel is adjustable by a high-quality slide attenuator. An optional EQ155 Variable Equalizer module may be inserted in the output of each mixer-channel.

## EACH MIXER CONTAINS:

A channel-on (CH ON) latching type pushbutton. Solo and Cue momentary-on pushbuttons.

Two 3-position (center-off) rotary switches for selection of PRE/POST Fade modes of Echo-Send and Foldback respectively.

A calibrated rotary step selector switch for sensitivity and input impedance adjustment, concentric with a separate switch for Phase Reversal of the input signal.

Mixer outputs are bussed to the SM7715 Sub Assign Modules consisting of 4-Submaster and 2-Master Select latching type pushbuttons. Any number of mixers may be grouped and assigned to any one or all submasters. An optional feature of the basic Assign Module is provision of sub-bypass pushbuttons (Master Select) which allows the inputs to be mixed into the masters directly.

Appropriately grouped mixer outputs are fed to the SM7711 Summing and Booster Amplifier Submaster Modules. These modules use the same type of slide attenuators and optional variable equalizers as used in the mixer modules. This module also has an output CH ON latching pushbutton plus Solo and Cue feeds selected by momentary-on pushbuttons. An optional SM7712 Submaster Module performs the same functions as the SM7711 and has in addition Echo-Send and Foldback feeds with gain controls.

Outputs from the SM7711 modules are routed as follows:

Either ahead of the output CH ON pushbutton to their respective Submaster Auxiliary Amplifier input, bypassing the PM7725 Program Assign Module, to provide VU meter indication, monitor select and auxiliary recording output splits at +8 dBm or, via the CH ON pushbuttons and the PM7725 Program Assign Modules directly to the respective Master Program-Channel selected.

Submasters selected by the Program Assign pushbuttons are routed to the PM7722 Summing and Program Amplifier Modules. The output gain of these modules is controlled by a slide attenuator on the control panel. Each program-channel provides a line output via a CH ON pushbutton, and two direct outputs at a nominal output level of +8 dBm/600 ohms plus separate VU meter and Monitor Select splits. However, as with other facilities of the SS7700 Series, the output configuration can be varied. An optional PM7721 Program Module performs the same functions as the PM7722 but with an integral rotary gain control. Optional compressor modules are available for insertion in the line outputs of systems requiring this facility.

# facilities & options

## SOLO/CUE/TALKBACK

Each mixer, submaster, and the echo-return input module can be cued or selected as a solo by momentary-on pushbuttons to separate busses, which feed their respective amplifier modules. Their gains are adjusted by control panel attenuators associated with their output amplifiers. Muting of these outputs is possible by means of relays provided. The Solo bus feeds an SN292 Summing Amplifier that drives an AT285 Medium-Level Amplifier providing a nominal monitor output level of —10 dBm/600 ohms. The Cue bus feeds a CM7441 Cue and Talkback Amplifier Module, providing a maximum 2 watts/16 ohms to a console speaker. Three —20 dBm external Cue inputs selectable by interlocking pushbuttons, and two studio Talkback inputs selectable by momentary-on pushbutton relay controls, are provided in the CM7441 module, in addition to a Talkback Microphone input.

## ECHO-SEND/ECHO-RETURN

Each channel input module contains a 3-position center-off rotary Echo-Send switch that selects either PRE or POST Fade Echo-Send modes. A rotary level control feeds the selected Echo-Send output to a PM7721 Program Module. Two balanced Echo-Send outputs, controlled by a common rotary gain control, are provided by the PM7721 at a nominal output level of +8 dBm/600 ohms.

An Echo-Return level of —10 dBm may be applied to the 600-ohm matching input of the IM7704 Medium-Level Input Amplifier Module. The output is fed via a gain control and CH ON pushbuton to the sub and master select pushbutton circuits of the SM7715 Sub-Assign Module. The submaster and master select pushbuttons may select the Echo-Return to any or all submasters and master program outputs. An optional IM7705 module performs the same functions and has in addition a Foldback facility.

## FOLDBACK

Each channel input module contains a 3-position center-off rotary Foldback switch, and a concentric level control, that selects either PRE or POST Fade Foldback modes. The level control feeds the selected Foldback output to a second PM7721 Program Module. Two balanced Foldback outputs, controlled by a common rotary gain control, are provided at a nominal output level of +8 dBm/600 ohms. This system is electrically identical to the Echo-Send facility.

## PAN

As an optional feature, a PP7751 Program Assign Module with PAN may be used in place of the PM7725 Program Assign Module, to provide an adjustable PAN input between the two master program-channels. PAN is selectable by a latching type pushbutton.

## MONITORING

Continuous visual monitoring of each submaster and master program-channel is provided by separate full size A-scale illuminated VU meters. Audio monitoring is provided by two headset jacks (0 dBm/5K-ohms) located at the front of the console below the control panel. Interlocking Monitor Select pushbuttons permit selection of a submaster or master program-channel, or one of three external feeds to the monitor-channel. All inputs are bussed via a pair of normally-closed contacts on the Solo relay to an AT285 Medium-Level Input Amplifier, providing a nominal gain controlled output level of —10 dBm. A muting relay is provided. Optional 10-watt or 50-watt speaker-amplifier systems, McCurdy types LSA609 or LSA611 respectively, are available for this monitor output.

## POWER SUPPLIES

Four PS876A/48 Regulated DC Power Supplies are used in the SS7700 Series. DC distribution throughout the entire console is so arranged that failure of any one supply will cause only a minimum of inconvenience. The amplifiers are powered by +48 Vdc and all lamps and relays by +24 Vdc. These power supplies are provided with overload and short-circuit protection features with provision for remote sensing of load conditions. The PS876A/48 is a functionally-proven, high reliability power supply of silicon solid-state circuitry.

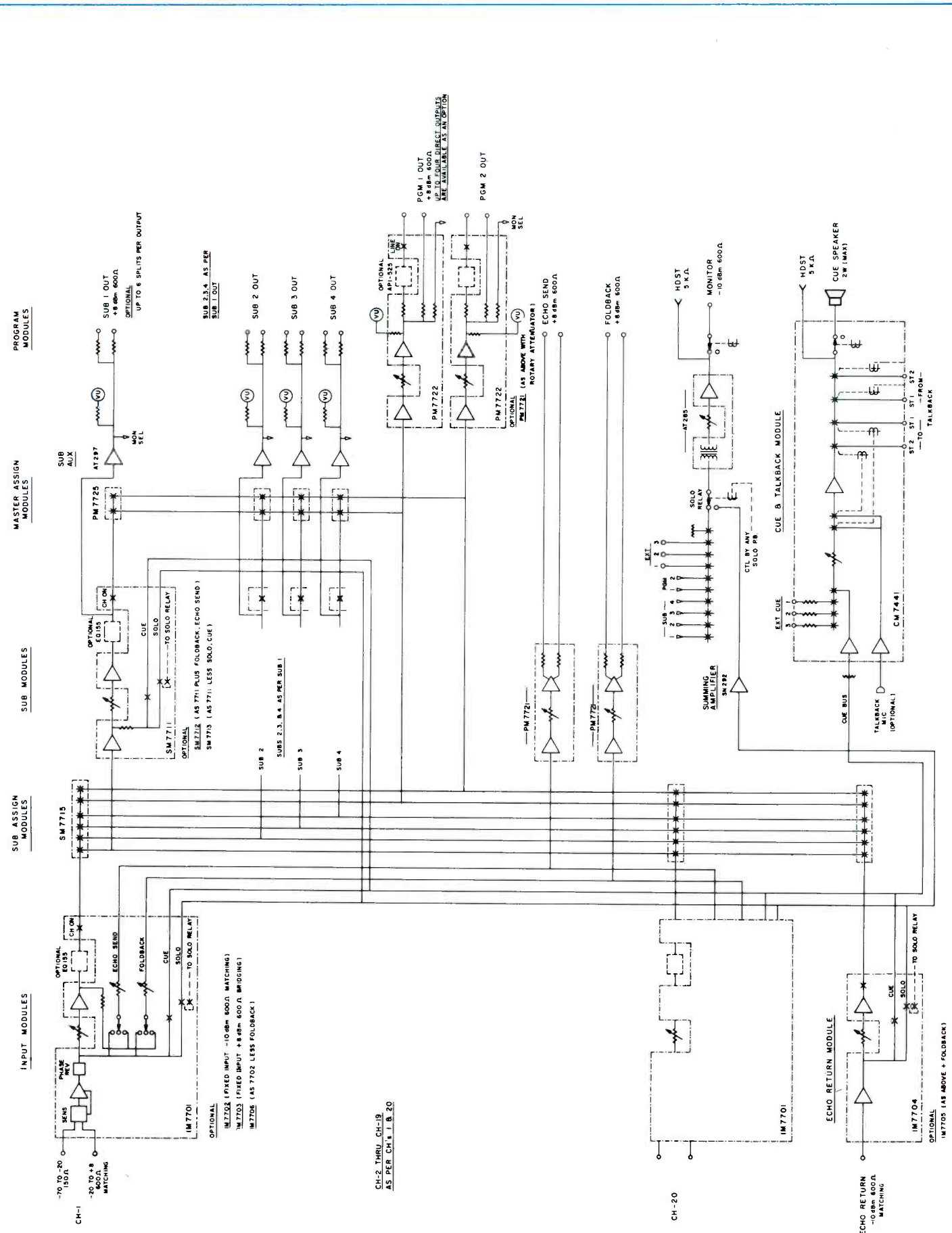
INPUT MODULES
SUB ASSIGN MODULES
SUB MODULES
MASTER ASSIGN MODULES
PROGRAM MODULES
IM7701
IM7702 (FIXED INPUT -10 dBm 600Ω MATCHING)
IM7703 (FIXED INPUT +8 dBm 600Ω BRIDGING)
IM7706 (AS 7702 LESS FOLDBACK)
OPTIONAL
SM7715
SM7711
SM7712 (AS 7711 PLUS FOLDBACK, ECHO SEND)
SM7713 (AS 7711 LESS SOLO, CUE)
OPTIONAL
PM7725
AT287
SUB AUX
SUB 1 OUT +8 dBm 600Ω
OPTIONAL UP TO 6 SPLITS PER OUTPUT
SUB 2,3,4 AS PER SUB 1 OUT
SUB 2 OUT
SUB 3 OUT
SUB 4 OUT
SUBS 2,3, & 4 AS PER SUB 1
PM7722
PGM 1 OUT +8 dBm 600Ω
UP TO FOUR DIRECT OUTPUTS ARE AVAILABLE AS AN OPTION
PGM 2 OUT
OPTIONAL PM7721 (AS ABOVE WITH ROTARY ATTENUATOR)
ECHO SEND +8 dBm 600Ω
FOLDBACK +8 dBm 600Ω
PM7721
PM7720
HDST 5 KΩ
MONITOR -10 dBm 600Ω
AT285
SUMMING AMPLIFIER SM7292
SOLO RELAY
CTL BY ANY SOLO PB
CUE & TALKBACK MODULE
CM7441
CUE SPEAKER 2W (MAX)
TALKBACK MIC (OPTIONAL)
CUE BUS
ECHO RETURN MODULE
IM7704
OPTIONAL IM7705 (AS ABOVE + FOLDBACK)
ECHO RETURN -10 dBm 600Ω MATCHING
CH-1
-70 TO -20 150Ω
-20 TO +8 600Ω MATCHING
CH-2 THRU CH-19 AS PER CH's 1 & 20
CH-20

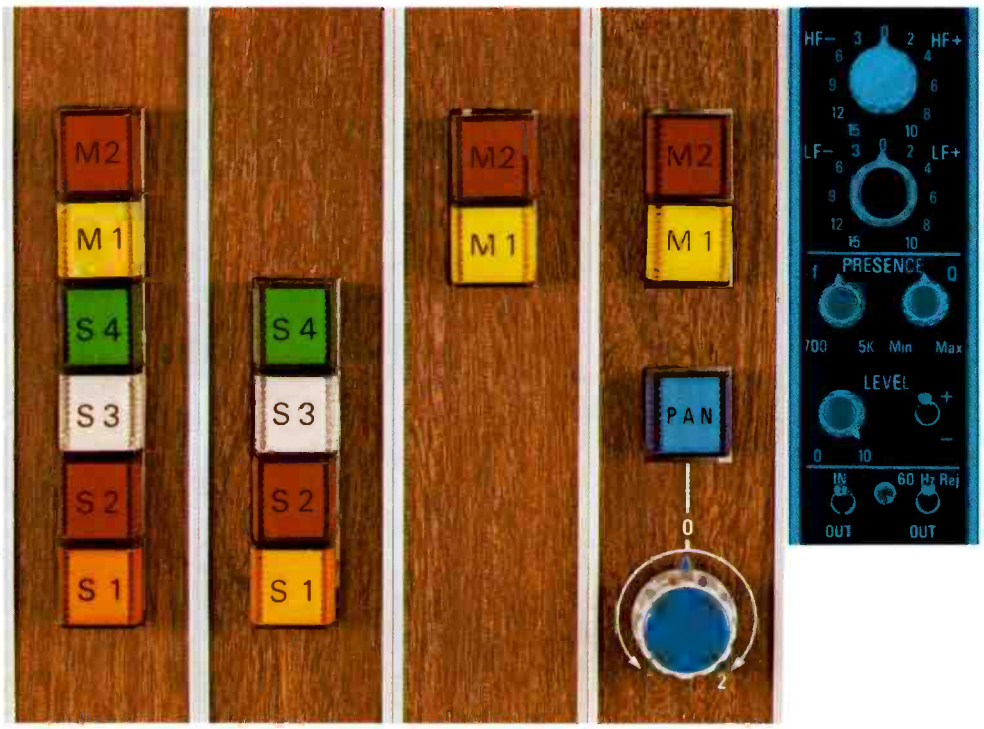


SM7715 SM7711 PM7725 PP7751 EQ155

(A) Faders
(B) Input Modules
(C) CH-ON
(D) Solo
(E) Cue
(F) Echo Send
(G) Foldback
(H) Sensitivity
(I) Equalizers
(J) Sub Assigns
(K) Master Assigns
(L) Talkback Speaker
(M) VU Meters
(N) Cue/Talkback Speaker
(O) Equalizers
(P) Compressors
(Q) Echo Return
(R) Sub-Master Program
(S) Master Program
(T) Talkback Controls
(U) Studio Monitor
(V) Control Room Monitor

IM7701 IM7702 IM7706 IM7704 PM7721 PM7722 CM7441

# modules & functions

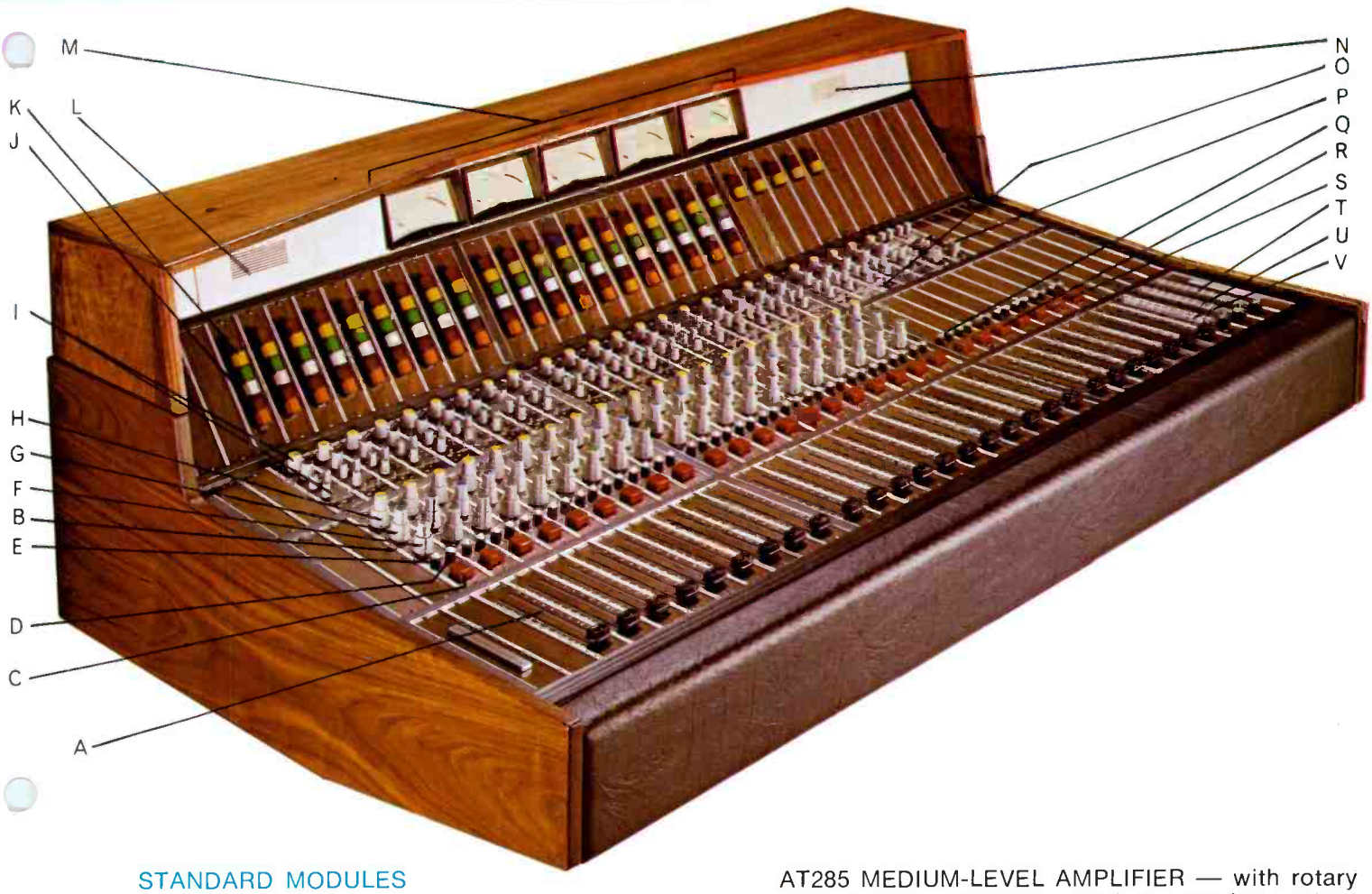


## STANDARD MODULES

IM7701 INPUT MODULE — Microphone and high-level inputs with sensitivity switch; —70 to —20 dBm/150 ohms and —20 to +8 dBm/600 ohms.

IM7704 INPUT MODULE — Medium-level input; —10 dBm/600 ohms matching. Typically used as Echo-Return input.

SM7715 SUB ASSIGN MODULE — 4 Sub and 2 Master selects.

SM7711 SUB MODULE — Summing and Booster Amplifier

PM7725 PROGRAM ASSIGN MODULE — 2 Master Selects.

PM7722 PROGRAM MODULE — Summing and Program Amplifier, controlled by a slide attenuator (fader).

PM7721 PROGRAM MODULE — Summing and Program Amplifier, controlled by a rotary attenuator. Typically used in Echo-Send and Foldback amplifiers.

CM7441 CUE AND TALKBACK MODULE — 2W/16 ohms output with 3 external Cue inputs, 2 external Talkback inputs, and a Talkback Microphone input.

SN292 SUMMING AMPLIFIER — Typically used as Solo amplifier to monitor output.

AT285 MEDIUM-LEVEL AMPLIFIER — with rotary gain control. Typically used as monitor output amplifier, —10 dBm/600 ohms.

AT297 HIGH-LEVEL BRIDGING AMPLIFIER — capable of six output splits. Typically used as Submaster auxiliary output.

PS876A/48 REGULATED DC POWER SUPPLY — Regulated +48 Vdc output to amplifiers and +24 Vdc to the lamps and relays.

## OPTIONAL MODULES

IM7702 INPUT MODULE — optional to IM7701. Fixed input, —10 dBm/600 ohms matching.

IM7703 INPUT MODULE — optional to IM7701. Fixed input, +8 dBm/bridging 600 ohms.

IM7705 INPUT MODULE — optional to IM7704 with Foldback added.

IM7706 INPUT MODULE — optional to IM7704 with Echo-Send added.

SM7712 SUB MODULE — optional to SM7711 with Foldback and Echo-Send added.

SM7713 SUB MODULE — optional to SM7711 less Solo and Cue.

PM7721 PROGRAM MODULE — optional to PM7722, with an integral rotary gain control.

PP7751 PROGRAM ASSIGN MODULE — optional to PM7725 with PAN added.

# summary of facilities

1. Up to 20 mixer-channels, 4 submasters and master program channels as required.
2. Straight-line faders (slide attenuators) on all channels.
3. Cue and Solo on all mixing channels via momentary-on pushbuttons.
4. Echo-Send and Foldback busses.
5. Sensitivity and Phase Reversal on all mixing channels.
6. Equalizer insertion facility on all mixing channels.
7. Sub and Master Assign pushbuttons on all channels.
8. Up to 8 Program and Submaster VU meters.
9. Cue and Talkback Speakers including an external Talkback Speaker facility.
10. Compressor insertion facility in the program outputs.
11. Echo-Return Control.
12. Talkback Controls.
13. Studio and Control Room Monitors.
14. External Cue Inputs.

## PROGRAM INPUT SELECTION

1. Two inputs on each mixer-channel; microphone and high-level.
2. All channels have capability to accommodate low, medium or high-level inputs depending on the input module installed or whether input sensitivity selectors are installed;

   (a) Low and high-level inputs; Input Module IM7701, —70 to —20 dBm/150 ohms and —20 to +8 dBm/600 ohms, balanced or unbalanced, with sensitivity switch and phase reversal. Optional input modules IM7702 fixed input —10 dBm/600 ohms matching and IM7703 fixed input +8 dBm/bridging 600 ohms.

   (b) Medium-level inputs: Input Module IM7704, —10 dBm/600 ohms matching, slide attenuator with Cue and Solo. Optional input modules IM7705 and IM7706, same as IM7704 with Foldback and Echo-Send respectively added.

## AUXILIARY INPUTS

1. One Echo-Return to mixers, —10 dBm/600 ohms matching.
2. Three external Cue inputs.
3. Three external Monitor inputs.
4. Two external Talkback inputs.
5. Optional Talkback microphone.

## OUTPUTS

1. Submaster and Master program-channels as required, individually VU meter monitored. Each channel is selectable to a program line via CH ON pushbuttons. Level: +8 vu (+8 dBm) 600 ohms balanced.
2. Monitor-channel has a muting relay and gain control. Level: —10 dBm/600 ohms. Optional LSA609, or LSA611 speaker — amplifiers are external.
3. One Echo-Send channel output.
   Level: +8 dBm/600 ohms.
4. One Foldback channel ouput.
   Level: +8 dBm/600 ohms.
5. One Cue/Talkback speaker output.
   Level: 2W (maximum)/16 ohms.
6. Two Headset outputs.
   Level: 0 dB/5K ohms .

# specifications

## GAIN (± 2 dB)

1. Microphone input to program output: 114 dB maximum with submasters.
2. Medium-level input to program output: 54 dB with submasters.
3. High-level input to program output: 36 dB maximum with submasters.

## FREQUENCY RESPONSE (REFERENCE 1 kHz)

1. For any input to any program output at normal attenuator settings (i.e. 10 dB below maximum levels specified): ±0.5 dB from 30 Hz to 15 kHz; ±1.0 dB from 20 Hz to 20 kHz.
2. For any input to monitor output at normal attenuator settings (with 10 dB in monitor) ±1.0 dB from 30 Hz to 20 kHz.

## TOTAL HARMONIC DISTORTION (TYPICAL PROGRAM PATHS)

Measured at 10 dB above normal operating levels (i.e. at maximum levels specified):

1. Low-level inputs: 0.5% or less at any frequency from 30 Hz to 20kHz.
2. High-level inputs: 0.5% or less at any frequency from 30 Hz to 20 kHz.
3. Monitor Channel: Less than 0.5% from 30 Hz to 15 kHz

## SIGNAL-TO-NOISE RATIO

Low-level inputs: Equivalent input noise of —124 dBm for —70 dBm input unweighted, (i.e. 64 dB below +8 for a —70 dBm microphone input) measured over a bandwidth of 10 Hz to 100 kHz at the —3 dB points.

## CROSSTALK

At least 60 dB below +18 dBm output level when feeding one channel and measuring an unused channel, 30 Hz to 15 kHz, at normal attenuator settings 12 dB in-hand.

## TRANSIENTS

The operation of any attenuator or switch in the console shall not degrade the noise figure by more than 10 dB.

## POWER REQUIREMENT

117 Volts ac, 50/60 Hz, 3-wire single phase, 950 VA maximum. (Can be supplied for 230 Volts on special order).

# expansion to SS7800

The expansion of the basic SS7700 console to an SS7800 incorporates a console structure 18 inches longer, providing additional space for 11 extra modules. Within this expanded area, additional facilities may be added which would include the following:

(a) the inclusion of jackfield facilities.
(b) Ancillary equipment controls such as machine controls for tapes, carts, turntables, etc.
(c) Further expansion of the mixer or other inputs, submaster and master program channels.

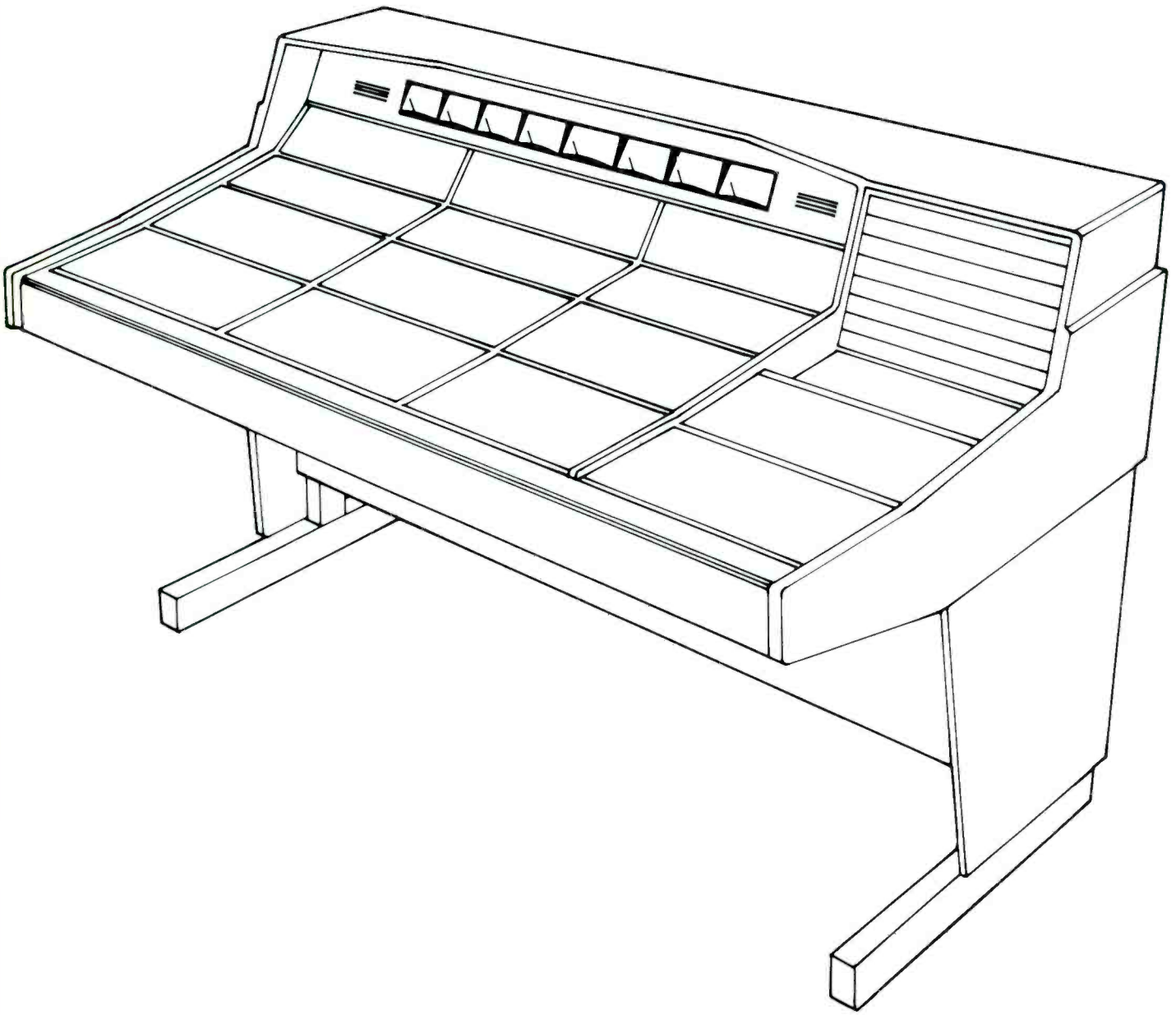

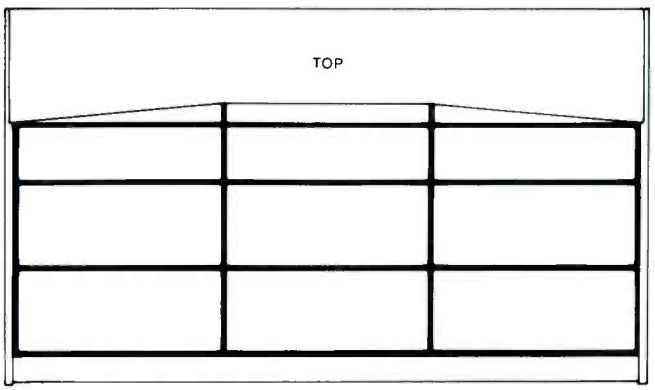
TOP

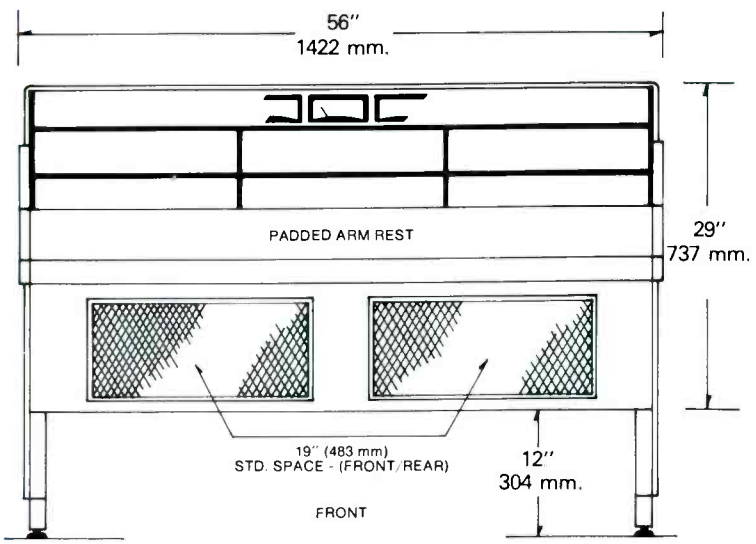
56"
1422 mm.
PADDED ARM REST
29"
737 mm.
19" (483 mm)
STD. SPACE - (FRONT/REAR)
12"
304 mm.
FRONT

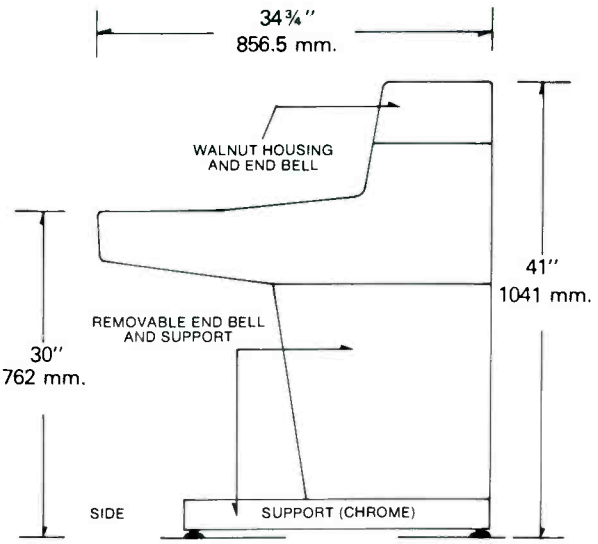
34¾"
856.5 mm.
WALNUT HOUSING
AND END BELL
41"
1041 mm.
REMOVABLE END BELL
AND SUPPORT
30"
762 mm.
SIDE
SUPPORT (CHROME)

# ordering information

## STANDARD EQUIPMENT

1. Specify type and quantity of input module desired from the following:
   (a) IM7701 Microphone and High-Level Module, —70 to —20 dBm/150 ohms and —20 to +8 dBm/600 ohms matching, c/w sensitivity switch and phase reversal, PRE and POST Fade Echo-Send and Foldback feeds and CH ON pushbutton.
   (b) Optional IM7702 Fixed Input Module, —10 dBm nominal to +20 dBm/600 ohms matching, PRE/POST Fade Echo-Send and Foldback feeds, Solo and Cue feeds.
   (c) Optional IM7703 Fixed Input module, +8 dBm nominal to +20 dBm/bridging a 600 ohm line, PRE/POST Fade Echo-Send and Foldback feeds, Solo and Cue feeds.
2. Specify type and quantity of submaster modules desired from the following:
   (a) SM7711 Summing and Booster Amplifier Module c/w Solo and Cue feeds and CH ON pushbuttons.
   (b) Optional SM7712 Summing and Booster Amplifier Module — Same as SM7711 plus Echo-Send and Foldback feeds.
   (c) Optional SM7713 Summing and Booster Amplifier Module — Same as SM7722 less Solo and Cue feeds.
3. Specify type and quantity of master program assign modules desired from the following:
   (a) PM7725 Master Program Assign Module with 2-Master Selects.
   (b) Optional PP7751 Master Program Assign Module — Same as PM7725 but with PAN added.
4. Specify type and quantity of master program output modules desired from the following:
   (a) PM7722 Summing and Program Amplifier Module, +8 dBm/600 ohms, c/w VU meter and Monitor Select feeds, latching type Line ON pushbutton and slide attenuator gain control.
   (b) Optional PM7721 Summing and Program Amplifier Module — Same as PM7722 but with an integral rotary gain control.
5. Specify type of echo-return input module desired from the following:
   (a) IM7704 Medium-Level Input Amplifier Module, —10 dBm/600 ohms matching, external gain control, Solo and Cue feeds, and a latching CH ON pushbutton.
   (b) Optional IM7705 Medium-Level Input Amplifier Module — Same as IM7704 plus a Foldback feed.
   (c) Optional IM7706 Medium-Level Input Amplifier Module — Same as IM7704 plus an Echo-Send feed.

## OPTIONAL EQUIPMENT

1. EQ155 Variable Equalizers.
2. Compressors.
3. Additional Monitoring Channels.
4. LSA609 or LSA611 Monitor Speaker-Amplifiers (external to console).
5. Talkback Microphone.
6. Companion housing for jackfield and ancillary equipment installation.

As with all consoles of the SS7700 Series, the possible combination of facilities available are too numerous to list, and are therefore left for discussion when the console requirements are being determined.

Printed in Canada

McCURDY RADIO INDUSTRIES LIMITED
108 CARNFORTH ROAD, TORONTO, ONTARIO M4A 2L4 (416) 751-6262, TELEX 02-21660
McCURDY RADIO INDUSTRIES INCORPORATED
1051 CLINTON STREET, BUFFALO, N.Y. 14206 (716) 854-6700

McCurdy Radio Industries reserves the right, without notice to make such changes in equipment, design, specifications, or components as progress in engineering or manufacturing techniques may warrant to improve the performance of the product.

# SS 8500

# modular stereo production console

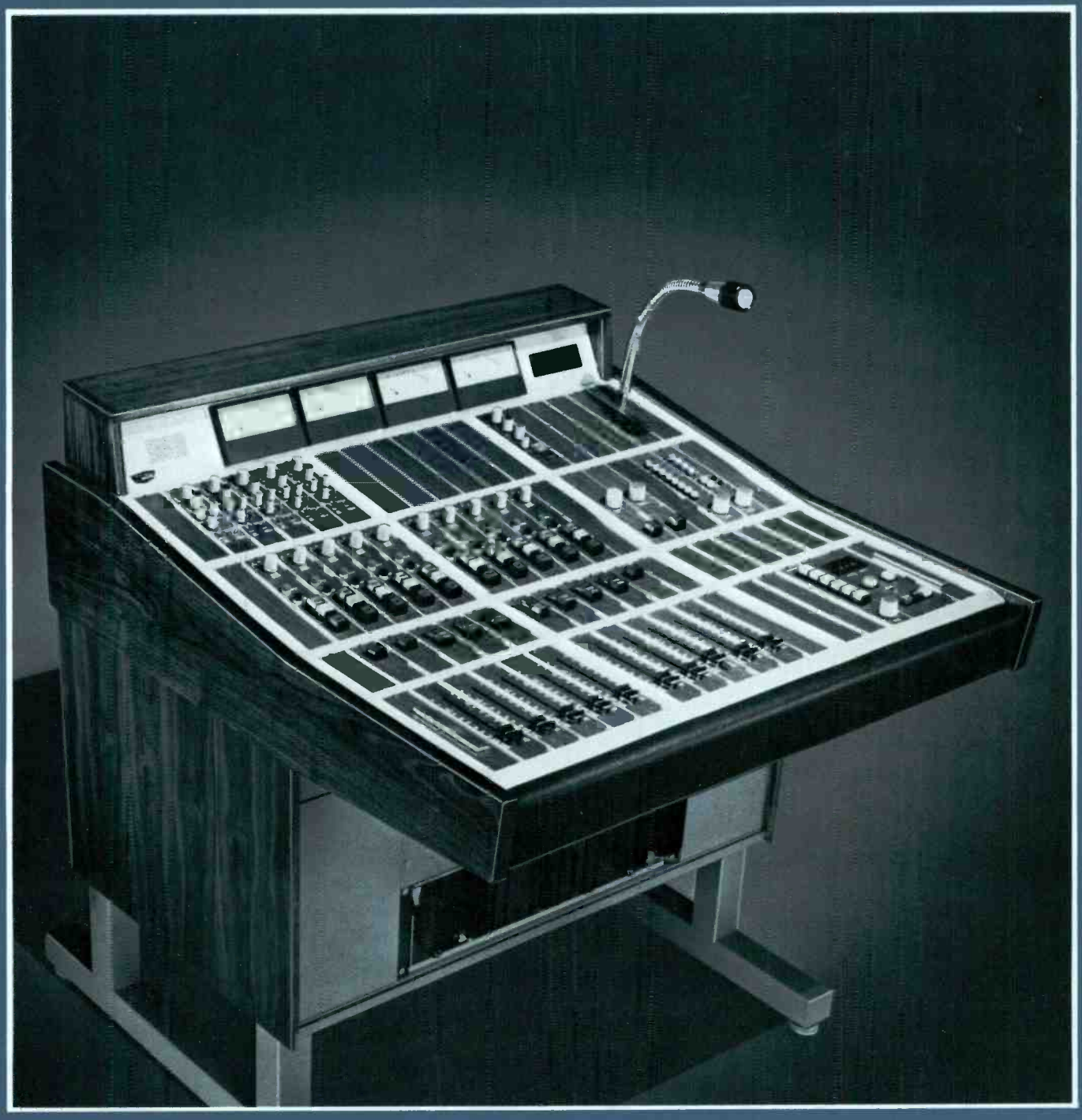

McCURDY

# standard equipment & options

The McCurdy SS8500 stereo console is a fully modular, professional audio production unit. It is ideally suited for use as an 'ON AIR' mixing desk, or as a master control centre in FM radio facilities. Standard features with available, additional customer options produce a custom-tailored, reliable FM Broadcast Production Package.

### Quality Features of the Series 8000 Modules

a) Integrated circuit technology

b) Balanced input and output stages

c) Provision for insertion of "Audio Processing Equipment" – equalizers – compressor/limiters, etc.

d) SILENT! "Momentary Action" pushbutton for "channel-on" switching

e) Front panel plug-in capability

f) Complete compatability with other modules in the 8000 series, with available options suited to specific requirements

### Standard Equipment on a SS8500 Stereo Console

- 10 Stereo input mixing channels, complete with A/B switching, allowing for 20 audio sources.
- Each mixer equipped with specially designed "conductive plastic" stereo slide attenuator (fader)
- Cue switching provided with fader (in maximum attenuator position, *and* front panel pushbutton, to facilitate production procedures.
- Separate 'Program' and 'Audition' pushbutton switch on each input mixer operates two channels simultaneously and/or independently.
- Output from each input mixer is available to either program channel, or both simultaneously.
- Input sensitivity switching (2 position), to suit specific mix requirements. Customer choice at time of purchase.
- Stereo program output channel complete with VU meters.
- Provision for audition and mono output channels.
- 2 monitor preamplifier and control systems, complete with 8 input selections.
- Cue/talkback system allowing 3-station communication.
- Extender module.

### Available options for the SS8500 Stereo Console

Provision is made for the insertion of:

1) Machine remote control modules
2) EQ 155 equalizers
3) CP 159 compressor
4) OT 157 multi-frequency oscillator
5) Foldback system
6) Echo-send and return
7) Real-time digital clock, SA138A
8) Elapsed-time digital counter and control panel, SA137A
9) Distribution amplifier systems

### Sensible Styling

The SS8500 stereo console is housed within a one-piece welded steel enclosure for maximum shielding in high RF environments.

Complete free-standing, self-supporting console. Control panel hinges upward to facilitate service and routine test procedures.

Console end bells and VU meter housing are richly toned, hand-rubbed, oiled walnut.

Woodgrain finish on control panel surface, highlighted with engraved style strips.

Padded armrest adds to both the appearance and operating comfort of the console.

Ease of operation is assured with controls arranged in easily accessible, uncrowded groupings for related functions.

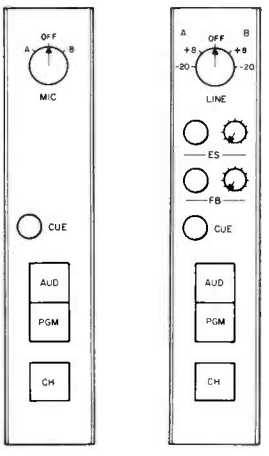


IM 8501-00-02 IM 8508-00-06

# facilities & options

## Series 8500 Mixer Module Options

| OPTIONS | 8501 | 8502 | 8503 | 8504 | 8505 | 8506 | 8507 | 8508 | 8509 | 8510 |
|---|---|---|---|---|---|---|---|---|---|---|
| 02 | ● | | | | ● | | | | ● | ● |
| 03 | | | | | | | | | | |
| 04 | | | | | | | | | | |
| 05 | | | | | | | | | | |
| 06 | | ● | | | | ● | | ● | | |
| 07 | | ● | | | | ● | | ● | | |
| | | | | | | | | | | |
| CHANNEL ON | ● | ● | | | ● | ● | | ● | ● | ● |
| PROGRAM | ● | ● | | | ● | ● | | ● | ● | ● |
| AUDITION | ● | ● | | | ● | ● | | ● | ● | ● |
| CUE | ● | ● | | | ● | ● | | ● | ● | ● |
| ECHO SEND | | | | | ● | ● | | ● | ● | ● |
| FOLDBACK | | | | | | | | ● | | |
| PAN | | | | | | | | | ● | ● |

## Series 8500 Input Options

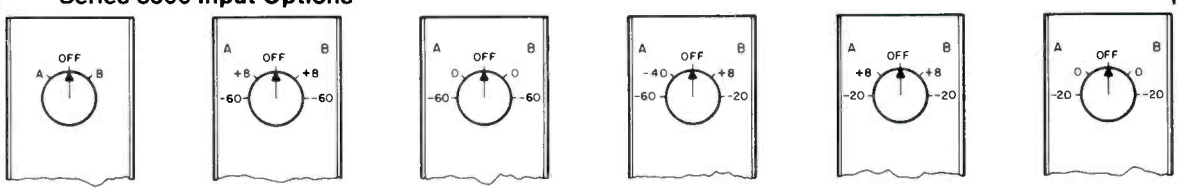


MIC. 02 | MIC./LINE 03 | MIC./LINE 04 | MIC./LINE 05 | LINE 06 | LINE 07

## Series 8500 Output & Auxiliary Modules

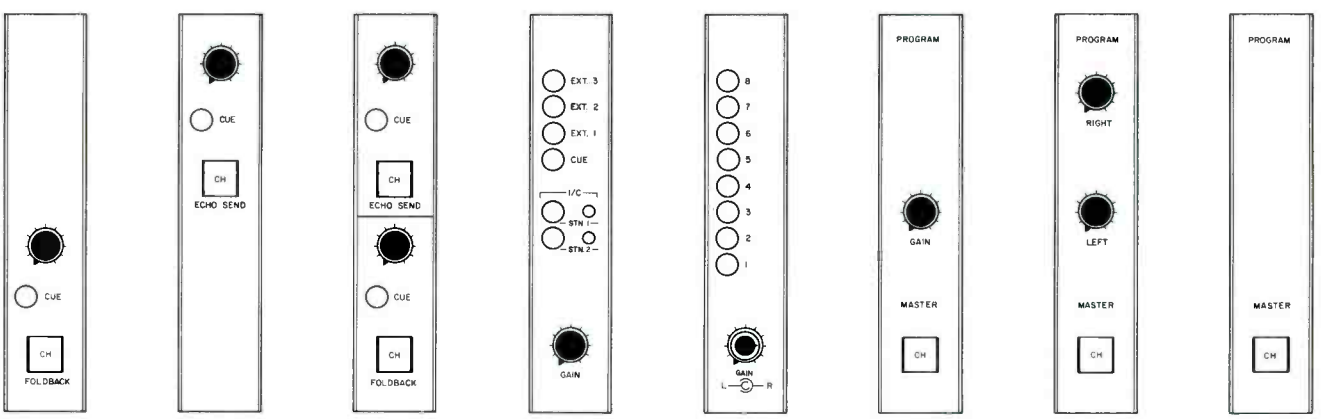


FM 8446 (MONO) — FOLDBACK MASTER

EM 8446 (MONO) — ECHO SEND MASTER

EFM 8446 (MONO) — FB/ES MASTER

CM 8441 — TALKBACK / CUE MODULE

MM 8431 (MONO) / MM 8531 (STEREO) — MONITOR MODULE

PM 8421 / AUD 8421 (0dBm OUT) / PM 8423 / AUD 8423 (+8dBm OUT)

PM 8521 / AUD 8521 (0dBm OUT)

PM 8422 / AUD 8422

PROGRAM / AUDITION MODULES

# installation

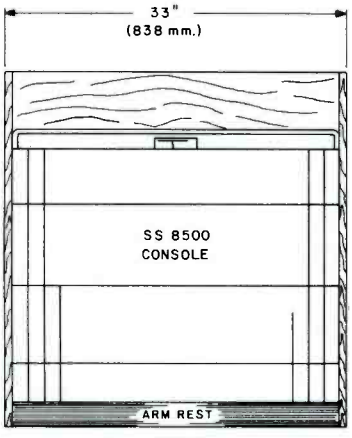


TOP

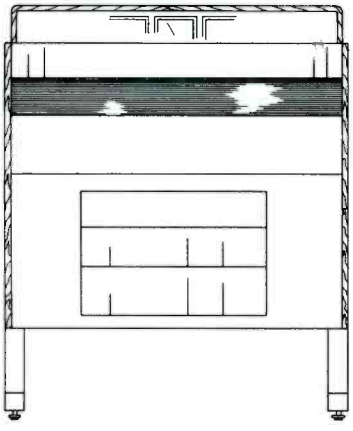

FRONT

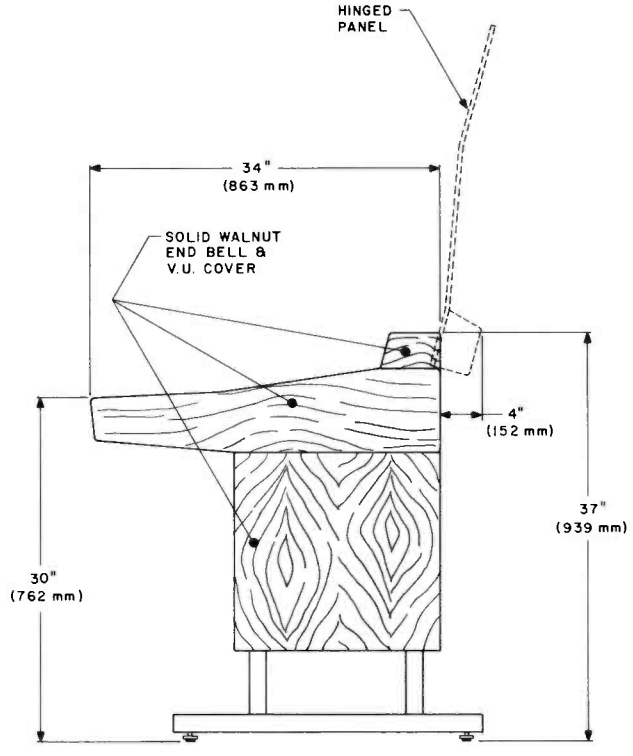


SIDE

*McCurdy Radio Industries reserves the right without notice to make such changes in equipment, design, specifications, or components, as progress in engineering or manufacturing techniques may warrant, to improve the performance of the product.*

Printed in Canada • SS8500 Console/Issue 2/12.76

**McCurdy Radio Industries Limited,**
**108 Carnforth Road, Toronto, Ontario M4A 2L4 (416) 751-6262 Telex: 06-963533**

**McCurdy Radio Industries Incorporated, TWX: 610-492-3219**
**1051 Clinton Street, Buffalo, N.Y. 14206 (716) 854-6700 Telex: 06-963533**

**U.S.A. East Coast Office,**
**Saddle River, N.J. P.O. Box 86, 07458 (201) 327-0750**

**SS8500 Stereo Console:**

# specifications

INPUT LEVEL: (nominal)
−60 dBm/150 for microphone select or as per options, switchable, 2 inputs.
For microphone input impedance at least 10 times source.
For high-level at least 10k Ohms.

OUTPUT LEVELS: (nominal)
0 dBm/600 Ohms balanced.
(PM8521 – Stereo Program)
+8 dBm/600 Ohms balanced
(PM8423 – Program, Mono)
−10 dBm/600 Ohms balanced
(MM8531 – Monitor, Stereo)
Maximum 3 Watt/8 Ohm, balanced/unbalanced, CM8441, cue.

GAIN: (Maximum ±1 dB)
Microphone/Program Module 84 dB.
Line/Program Module 44 dB.
Microphone/Program/Monitor 84 dB.
Line/Program/Monitor 44 dB.

FREQUENCY RESPONSE:
(30 Hz to 15 kHz)
Any input to program output ±0.5 dB.
typically ±0.25 dB.
Any input to monitor ±1 dB.
typically ±0.5 dB.

SIGNAL TO NOISE:
(10 Hz to 100 kHz)
Equivalent input noise −124 dBm for microphone channel (option 02), better than 78 dB below test level for line inputs (option 06). Test level is 10 dB above program.

(30 Hz to 15 kHz)
Any path less than 0.25% at test level (10 dB above program) typically less than 0.1%, at maximum dynamic range less than 0.5%.

CHANNEL SEPARATION:
(30 Hz to 15 kHz)
At least 50 dB below test level, when feeding −50 dBm into −60 dBm microphone. Left input and measuring terminated right channel.

TRANSIENTS: (RMS)
Better than 60 dB below output (test level) when operating a relay or pushbutton.

POWER REQUIREMENT:
115 V ac, 60 Hz, 3 wire single phase, 50 Va (230 V ac, 50 Hz, upon request).

AMBIENT TEMPERATURE:
0°C to +55°C (32°F to 131°F).

OVERALL DIMENSIONS:
Height: 36″
Width: 33.5″
Deep: 35″

**SS8500 Stereo Console:**

Standard Compliment:

a) INPUT MODULES:
Total of ten (10) consisting of:
IM8501-00-02 (Microphone) or
IM8502-00-06 (line +8, −20) or
IM8502-00-07 (line 0, −20)

b) OUTPUT MODULES:
Total of two (2) PM8423.
+8 dBm, 4 split output
Option: AUD. 8423 (same as above but audition)
PM. 8521,0 dBm/600 Ohms
AUD. 8521,0 dBm/600 Ohms

c) CUE MODULE:
CM8441 (one) Mono.

d) MONITOR MODULE:
MM8531 (two)

e) VU METERS:
Two (2) Program left, Program right.
Option: Audition left, Audition right, Mono.

# functional

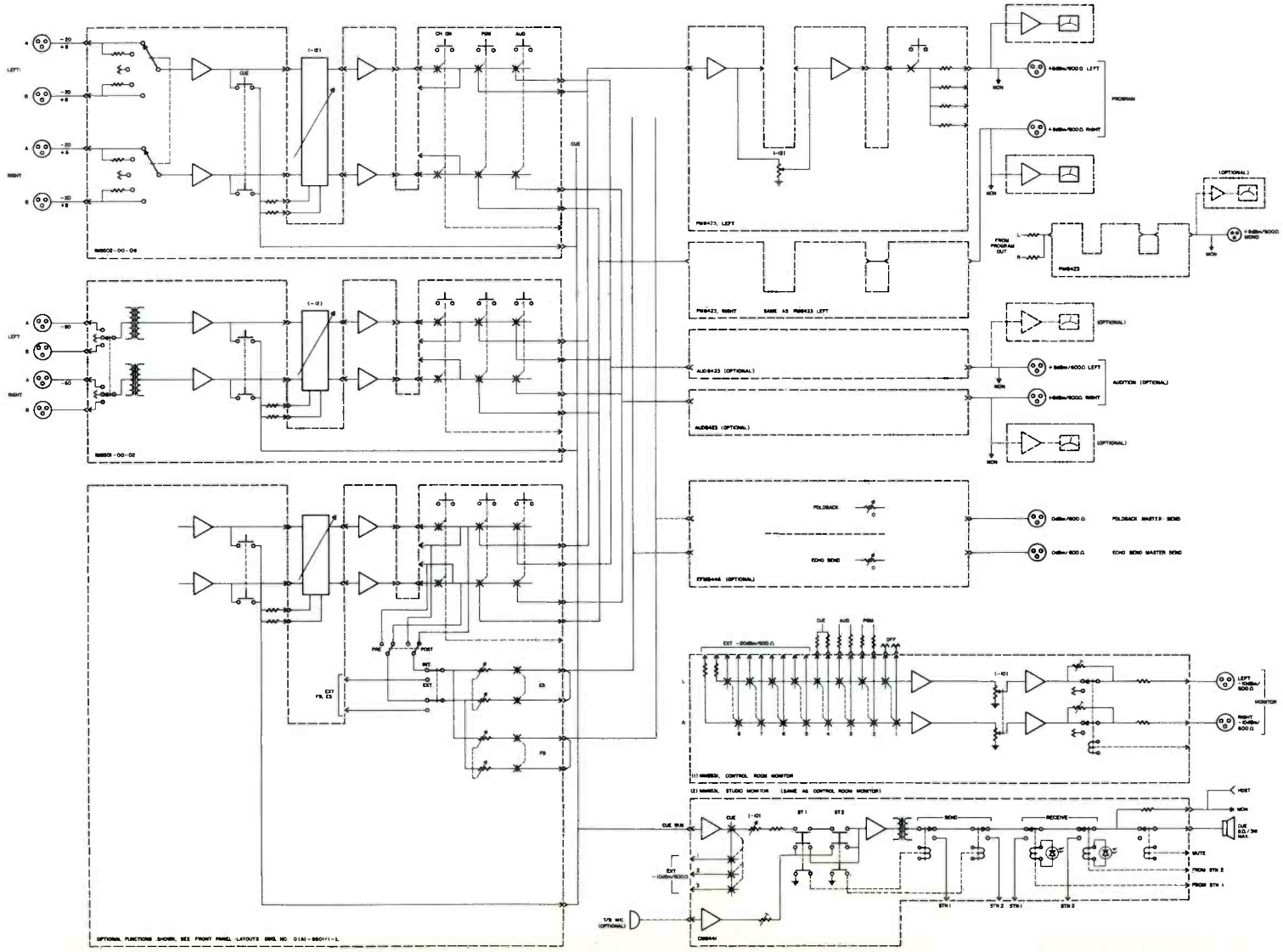
LEFT
RIGHT
CUE
PFL
AUX
PROGRAM
MON
FROM PROGRAM OUT
(OPTIONAL)
AUDITION (OPTIONAL)
FOLDBACK
ECHO SEND
FOLDBACK MASTER SEND
ECHO SEND MASTER SEND
EXT
PRE
POST
MONITOR
STUDIO MONITOR (SAME AS CONTROL ROOM MONITOR)
SEND
RECEIVE
MUTE
HOST
T/B MIC (OPTIONAL)

# PE2400

## SOLID-STATE PORTABLE AUDIO CONSOLE

- Accommodates eight low-level inputs or four high- and four low-level inputs selectable to four mixing channels.
- 110 db gain capability, plus a full +18 dbm output after a 6 db pad.
- Contains built-in 1 khz oscillator for line checking.
- All active component modules are plug-in for easy servicing.
- Operates from ac line or internal or external battery power supply.
- Provision for paralleling units.

PE2400 Removed from Carrying Case

## DESCRIPTION

The PE2400 is a high-performance four-mixer audio console designed for use in remote locations or in permanent applications where the facilities of a larger console are not required. Advanced solid-state circuit designs, utilizing stable silicon devices, enable the PE2400 to meet performance specifications formerly found only in the highest quality studio consoles. State-of-the-art circuitry and the use of full-size, high quality components combines circuit efficiency with packaging dependability.

The functional block diagram illustrates the facilities provided in the PE2400. The console comprises four mixing channels, one program channel, a PA channel, a test oscillator, and a regulated power supply. Four of the available eight low-level inputs may be selected by A-B preamplifier selector keys via XLR connectors located on the rear panel. The A position of the key selects the permanent low-level receptacle; the B position of the key selects the optional low-level or high-level input. The sensitivity of the B-input positions is determined by the status of low-high slide switches located on the rear console panel.

The integrated preamplifier and mixer amplifier for each channel utilizes a standard plug-in module with an interstage attenuator control for independent level adjustment. This configuration permits the console system to operate over a wide range of signal input conditions with performance characteristics comparable to those of many sophisticated studio mixing consoles. The mixing channel attenuator is a high quality step-type rotary control which ensures freedom from mixing noise and provides long-term dependability.

McCURDY RADIO INDUSTRIES LIMITED
108 CARNFORTH ROAD ▭ TORONTO 16 ▭ CANADA
(416) 751-6262
TELEX 02-21660
1051 CLINTON STREET ▭ BUFFALO ▭ N.Y. 14206
(716) 854-6700
McCURDY RADIO INDUSTRIES INCORPORATED

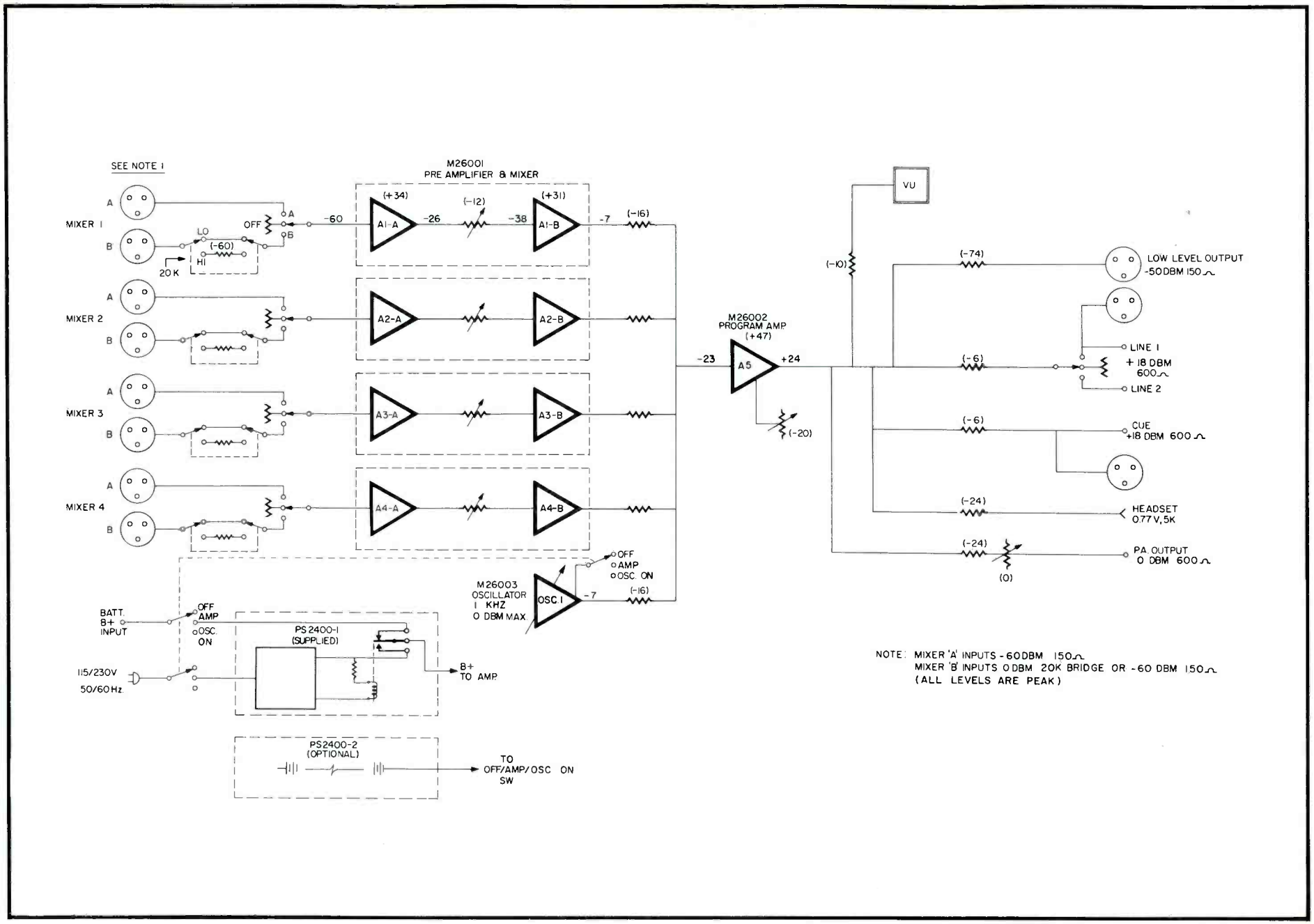


Functional Block Diagram

The plug-in program amplifier is conservatively designed to accommodate 1-watt peak output signals. This ensures that +18 dbm is delivered to the output after a 6 db resistive isolation network, but allows additional margin to accommodate peak program material with low distortion. The master gain control is incorporated within the program amplifier circuitry and is available on the front panel for adjustment of overall system gain. An output key selects the program to one of two output lines.

Program transmission is continuously monitored by a full-size VU meter, and a headset jack is conveniently located on the front panel. In addition, a low-level output and a cue output are provided to permit operation of the console in parallel with a second PE2400, or in conjunction with other external equipment for more complex remote pickups.

A 1 khz reference oscillator is included for use in setting line level. The test oscillator is calibrated for zero VU reading when the master gain control is adjusted for normal operating level, and is interlocked with the mixer selector keys to prevent accidental operation during program transmission. A balanced output is provided, via binding post terminals located in the rear panel, for connection to an external public address system. A separate front panel control regulates the output level to the PA system.

The PE2400 is completely self-contained utilizing either standard plug-in ac power supply type PS2400-1, or an optional plug-in battery supply type PS2400-2. A locking guide system accommodates one of the above power supply modules; when installed, the power supply becomes an integral component of the console. Terminals are located on the rear of the ac power supply chassis for connection of an external battery. If the ac line power should fail, an internal ac-to-battery transfer relay actuates and maintains program operation.

The mechanical design of the PE2400 provides ready access to all components for servicing. As noted above, the ac and battery power supplies are plug-in units; the four preamplifier-mixer assemblies are plug-in modules, as are the program amplifier and 1 khz test oscillator. The front of the console hinges forward to expose the keys and other panel-mounted components, and the top panel is removable to provide access to the plug-in modules.

Two accessories are available to enhance the portability of the console; a PE2400-3 leather carrying case, and a PE2400-4 Fiberglas shipping case which affords maximum protection to the unit during transit.

## SPECIFICATIONS

INPUTS

Eight inputs selectable to four channels, as follows:

(1) Four low-level inputs, -60 dbm, 150 ohms, selected by "A" position of mixer input keys.

(2) Four low-level inputs selected by "B" position of keys via LO-HI switches.

(3) Four high-level inputs, 0 dbm, 20K ohms (bridging 600 ohms), selected by "B" position of keys via LO-HI switches.

OUTPUTS

(1) One program output, selectable to 2 lines, +18 dbm, 600 ohms (after 6 db pad).

(2) One program output, -50 dbm, 150 ohms.

(3) One program output, +18 dbm, 600 ohms (parallel with line 1 only).

(4) Two cue outputs, +18 dbm, 600 ohms.

(5) One PA output, 0 dbm, 600 ohms.

(6) One headset output, 0.77v, 5000 ohms.

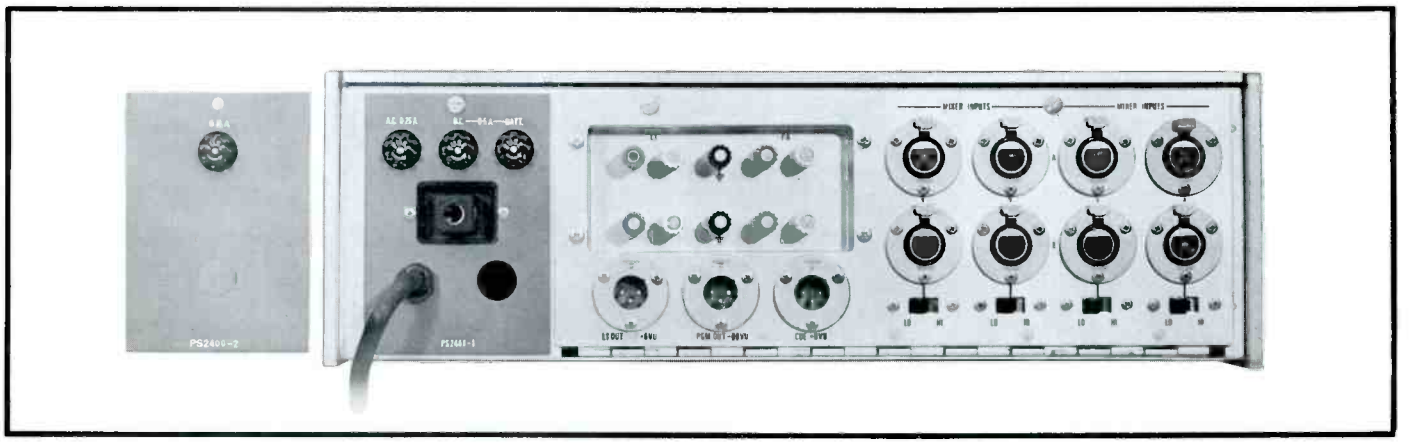

Rear View of PE2400 With Accessory Battery Module

GAIN (±1 db)

(1) Microphone input to program output; 110 db.

(2) Microphone input to low-level (parallel) output; 42 db.

(3) Microphone input to cue output; 110 db.

(4) Microphone input to PA output; 92 db.

(5) High-level input to program output; 50 db.

FREQUENCY RESPONSE (ref 1 khz)

For any input to any output at normal attenuator settings:

(1) Within ±1 db, 50 hz to 15 khz.

(2) Within ±1.5 db, 30 hz to 20 khz.

NOISE:

(1) Relative input noise from any preamp, -122 dbm, measured over 10 hz to 100 khz bandwidth.

HARMONIC DISTORTION

Less than 0.5%, 50 hz to 15 khz, with -60 dbm level to a microphone input or 0 dbm level to a high level input, for normal attenuator settings and +18 dbm output.

POWER REQUIREMENTS

(1) 105v to 125v or 210v to 250v ac, 50/60 hz, single phase, 20va (with PS2400-1 ac power module supplied).

(2) Internal or external 36 vdc (PS2400-2 battery power module provides 40 hrs of program operation).

AMBIENT TEMPERATURE

(1) AC operation; -18° C to 65° C.

(2) Internal battery operation; 5° C to 45° C.

OVERALL DIMENSIONS

(1) Less carrying cases; 5-1/2 in. high, 12-11/16 in. deep, 17-1/2 in. wide.

(2) Leather carrying case; 19 in. high, 14 in. deep, 19-1/2 in. wide.

(3) Fiberglas shipping case; 10 in. high, 14 in. deep, 19-1/4 in. wide.

WEIGHT

(1) With ac power module, 25 lb.

(2) With battery power module, 25 lb.

## ORDERING INFORMATION

ORDER: PE2400 Portable Audio Console complete with ac power module type PS2400-1.

Optional Accessories:

PS2400-2 Battery power supply module complete with battery.

PE2400-3 Leather carrying case.

PE2400-4 Fiberglas shipping case.

*McCurdy Radio Industries reserves the right, without notice, to make such changes in equipment, design, specifications, or components as progress in engineering or manufacturing techniques may warrant to improve the performance of the product.*

# CS9000 series intercom systems

McCurdy

# description

The McCurdy Series 9000 intercom systems offer application flexibility and performance reliability to satisfy the most stringent broadcast and professional requirements.

Complete intercom systems, including optional equipment such as key panels, microphones and speakers, can be supplied by McCurdy Radio Industries.

- Solid-state, balanced crosspoints for reliable switching.
- All crosspoints are supplied in 10 x 10 and 20 x 20 matrices.
- Two basic input/output configurations, 10 x 10 and 20 x 20. Custom units and larger configurations on request.
- On 10 x 10 and one type of 20 x 20 configuration, all circuit connections are made to standard rear-mounted connectors. The 20 x 20 is also available with terminal blocks provided for circuit connections.
- Each input amplifier may be switched to accommodate carbon microphone, dynamic microphone or line input.
- Automatic gain control circuitry for input amplifier which is easily strapped in or out of circuit.
- Customer insert capability between input amplifier and matrix (e.g. jackfield).
- Full 3 Watt output available into 8 or 600 ohms (+35dBm, 600 ohms) and an auxiliary line output at +18dBm, 600 ohms.
- Output amplifier muting circuit providing full or partial mute.
- Silicon solid-state circuitry of proven reliability used throughout.
- Inexpensive, dual, plug-in crosspoints provided.
- Many customizing, extra-cost options available, such as:
  - — Partial crosspoint mute
  - — Crosspoint inhibit control
  - — Crosspoint tally control
  - — Crosspoint delegation control

## AP276 INTERCOM PREAMPLIFIER AND MATRIX CROSSPOINT CARD

The AP276 may be switched to accommodate a carbon microphone, dynamic microphone or line input. To accommodate wide variations in input level, the automatic gain control section may be activated by changing jumper positions on the circuit board (no soldering required). The ten plug-in crosspoints associated with each input amplifier, which determine the audio routing from input to output, are contained in the AP276.

In systems larger than 10 x 10, such as 20 x 20, 30 x 30 or larger custom units, only the first matrix card in any input line is provided with an input preamplifier. All other cards in each bus contain only crosspoints and controlling logic.

## AM278 AND AM478T OUTPUT AMPLIFIER CARDS

Two different output arrangements are possible with this series of output amplifiers.

The standard AM478T consists of two identical amplifiers, each featuring a +18dBm, 600 ohm, active-balanced line output and an isolated transformer-coupled 3 Watt, 8 or 600 ohm output. Both outputs from each amplifier are individually adjustable.

The optional AM278 consists of two amplifiers, each having an active-balanced +18dBm, 600 ohm, line output. Other optional output amplifier configurations, for use in larger custom systems, are also available.

## POWER SUPPLY

A fully regulated ±15 Volt power supply is provided as standard equipment with each intercom system. The quantity of power supplies will depend upon the current requirements of the particular intercom system. On custom systems larger than 20 x 20, a separate ±4 Volt power supply is required, in addition to the ±15 Volt supplies.

# functional, 20 x 20

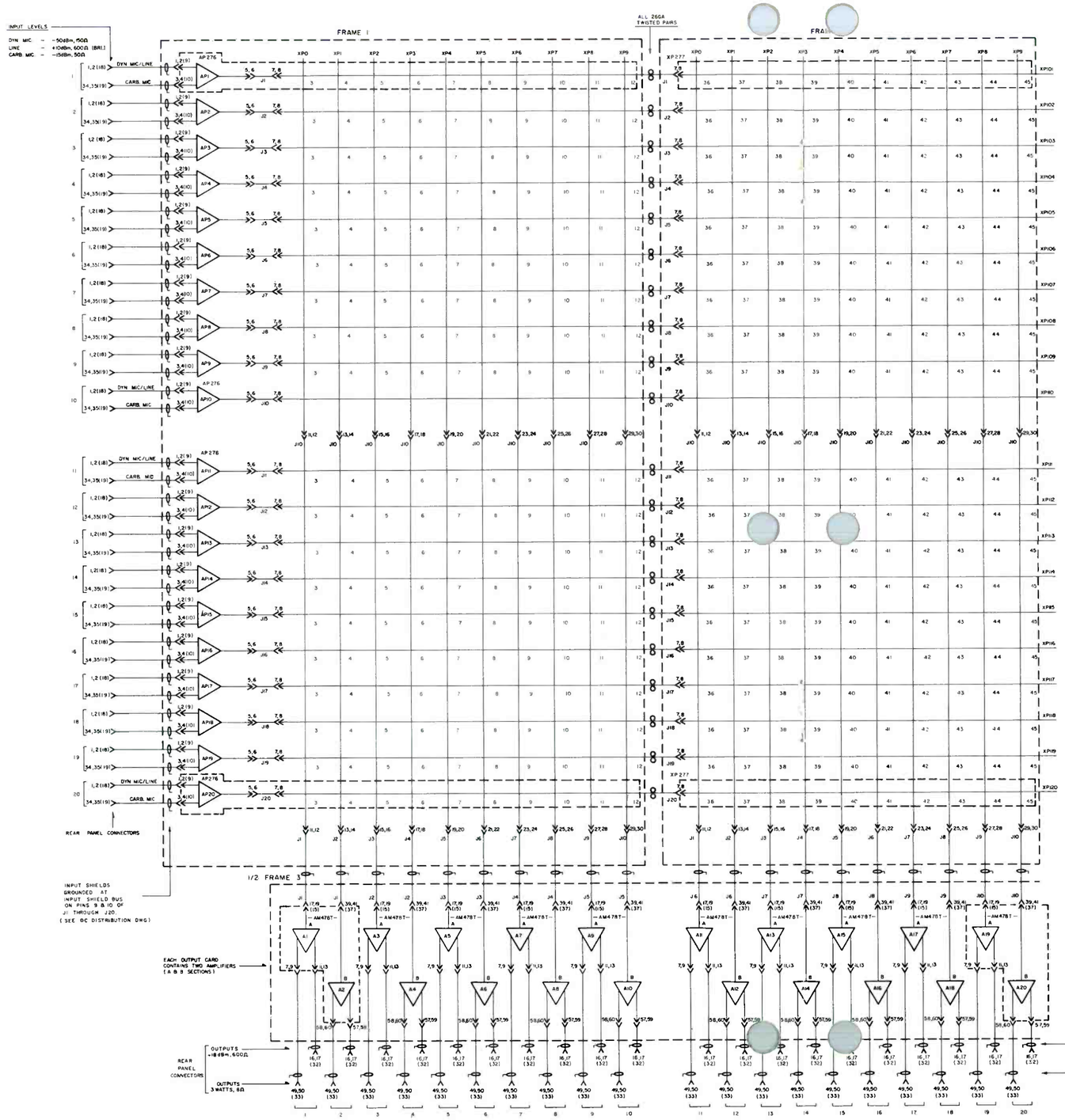


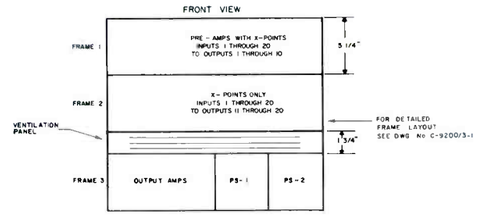


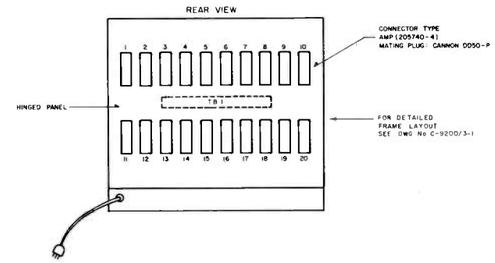


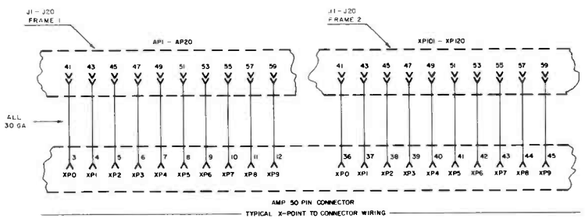


LEGEND

- NORMALLY OFF, SWITCHED ON X-POINT
- NORMALLY ON, SWITCHED OFF X-POINT
- PERMANENTLY ON X-POINT.
- NORMALLY OFF, SWITCHED ON (BY RECEIVER) X- POINT.
- NORMALLY ON, SWITCHED TO PARTIAL MUTE X- POINT.
- DELEGATION CONTROLLED X-POINT
- INHIBIT CONTROLLED X-POINT.

NOTES

1. LEVELS SHOWN ARE MAXIMUM LEVELS; OPERATING LEVELS ARE 10dB LOWER.
2. EACH X-POINT HAS A CONNECTOR PIN AS INDICATED.
3. X-POINT CONTROL IS -4V w.r.t. GND.
4. STANDARD 20 x 20 INTERCOM COMES WITH ALL 400 X-POINTS SUPPLIED.
5. DYN MIC, LINE AND CARB MIC INPUTS ARE PRESELECTED WITHIN THE INPUT AMPLIFIERS.

# specifications

All levels are nominal, unless otherwise specified. Test levels are given in brackets.

INPUT LEVELS:
(with AGC section out)
1) Dynamic microphone; —60dBm (—50dBm), 150 ohms. —25dBm, maximum.
2) Carbon microphone: —25dBm (—15dBm), 50 ohms. 0dBm, maximum.
3) Line, bridging; 0dBm (+10dBm), 600 ohms. +18dBm, maximum.

INPUT LEVELS:
(with AGC section in)
Dynamic microphone, for 2dB, maximum, output change; —60 to —30dBm, 150 ohms.

INPUT IMPEDANCE:
At least ten times source impedance.

INTERSTAGE LEVEL:
At output of AP276 with AGC section out; —10dBm (0dBm), 600 ohm, terminated bus. +10dBm maximum.

OUTPUT LEVELS:
With AM478T output amplifier.
1) Line output; +18dBm, 600 ohms, maximum.
2) Main output; 3 Watts, 8 ohms or +35dBm, 600 ohms, maximum.

FREQUENCY RESPONSE:
+1dB, —2dB, 100 Hz to 10 kHz

DISTORTION:
1% maximum, 150 Hz to 10 kHz at rated output.

SIGNAL TO NOISE RATIO:
80dB below rated output, minimum.

EQUIVALENT INPUT NOISE:
Better than —115 dBm, unweighted, typically better than —120 dBm.

CROSSPOINT DRIVER SINK CURRENT:
50mA, maximum

POWER REQUIREMENTS:
1) CS9100, 10 x 10 matrix; 117 Volt (230 Volt optional), 50/60 Hz, 150 VA
2) CS9200, 20 x 20 matrix; 117 Volt (230 Volt optional), 50/60 Hz, 300 VA

DIMENSIONS:
1) CS9100, 10 x 10 matrix; 5.25 in. (133.4 mm) high, 19 in. (482.6 mm) wide, 14 in. (355.6 mm) deep, excluding mating connectors.
2) CS9200, 20 x 20 matrix; 15.75 in. (400 mm) high, 19 in. (482.6 mm) wide, 14 in. (355.6 mm) deep, excluding mating connectors.
3) CS9220, 20 x 20 matrix; Same as CS9200, except that terminal blocks are supplied on rack mounting bracket to be mounted behind the intercom frames.

# functional, 10 x 10

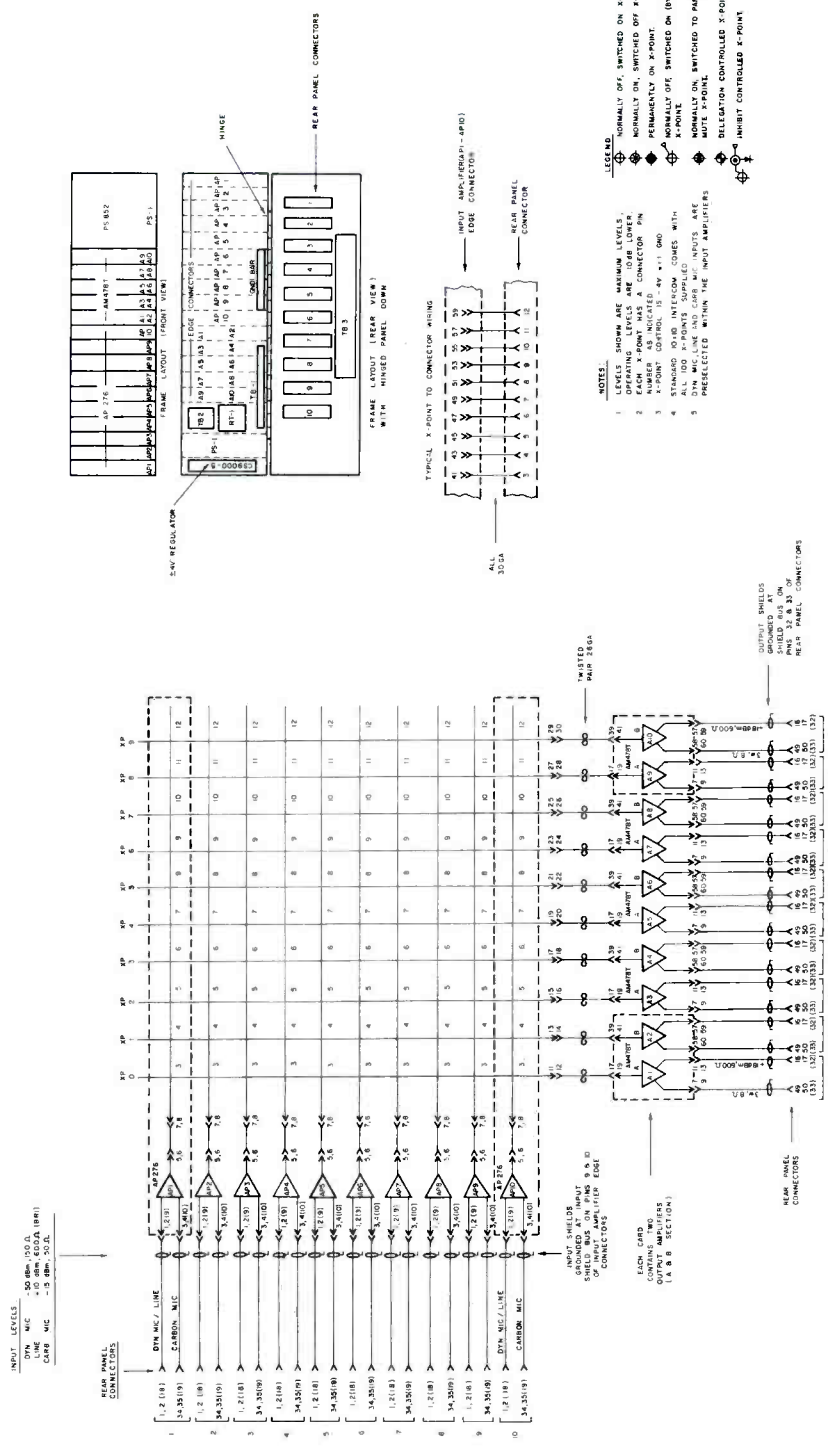

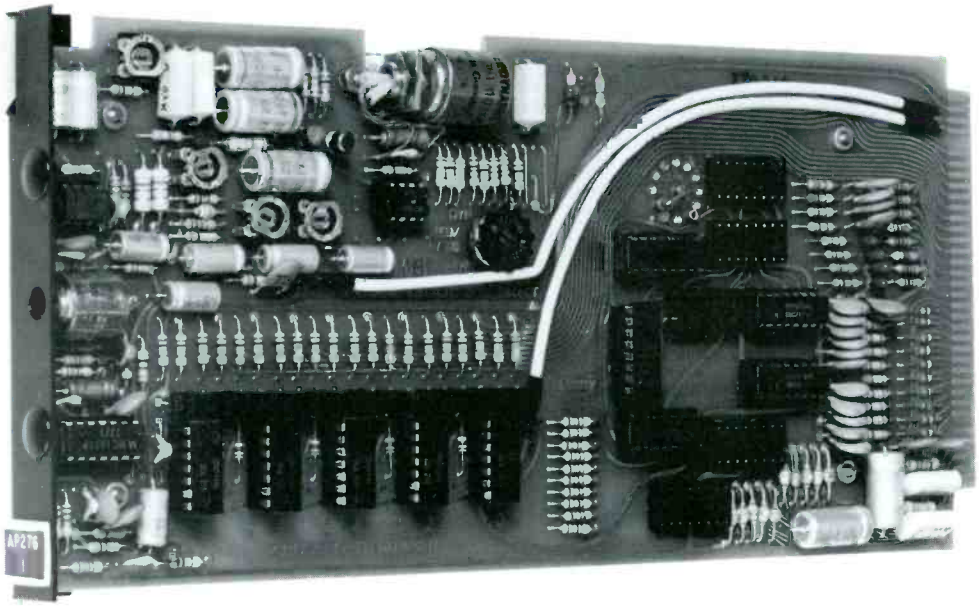

AP276 PREAMPLIFIER
AND MATRIX MODULE

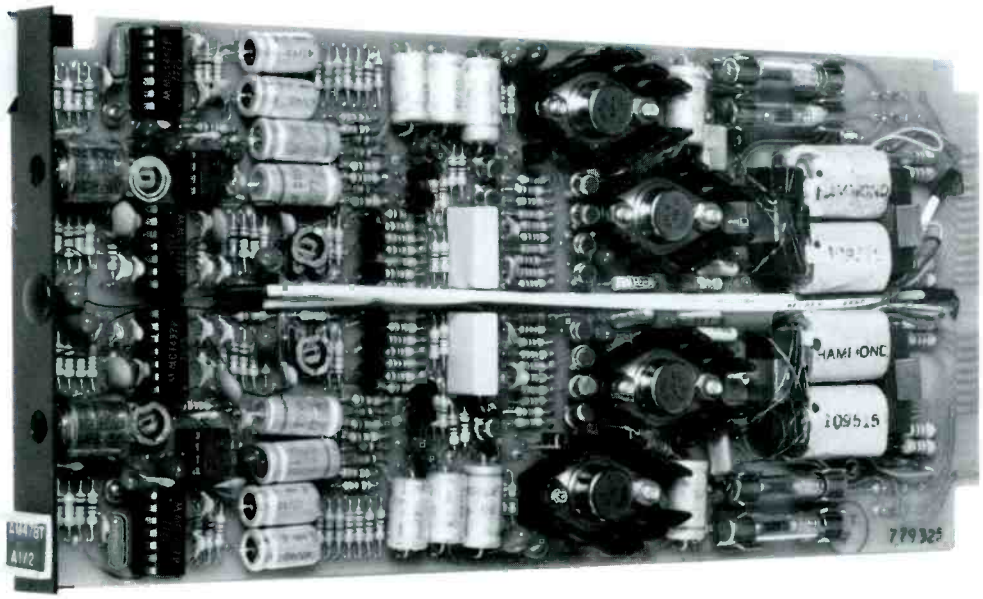

AM478T OUTPUT AMPLIFIER
MODULE

# ordering information

CS9100 10 x 10 intercom system complete with input amplifiers, matrix, output amplifiers and power supply for 117V ac operation. All circuit connections on rear panel connectors.

CS9100/230 Same as CS9100 except supplied for operation on 230 Volt ac power.

CS9200 20 x 20 intercom system complete with input amplifiers, matrix, output amplifiers and power supply for 117V ac operation. All circuit connections on rear panel connectors.

CS9200/230 Same as CS9200 except supplied for operation on 230 Volt ac power.

CS9220 20 x 20 intercom system complete with input amplifiers, matrix, output amplifiers and power supply for 117V ac operation. All circuit connections on terminal blocks, mounted on bracket behind intercom frame.

CS9220/230 Same as CS9220 except supplied for operation on 230 Volt ac power.

Custom key panels, designed to suit the control requirements of the intercom system, available on request.

For information on larger systems, options available, or for engineering assistance and application information, contact the nearest McCurdy Radio Industries office.

# CS9100, rear frame layout

Printed in Canada

**McCURDY RADIO INDUSTRIES LIMITED**
108 CARNFORTH ROAD, TORONTO, ONTARIO M4A 2L4 (416) 751-6262, TELEX 06-963533, TWX 610-492-1373

**McCURDY RADIO INDUSTRIES INC.**
UNITED STATES HEAD OFFICE
1711 CARMEN DRIVE, ELK GROVE VILLAGE, ILLINOIS 60007, (312) 640-7077, TWX 910-222-0436
EAST COAST OFFICE
223 WEST SADDLE RIVER ROAD, SADDLE RIVER, N.J. 07458, (201) 327-0750, TWX 710-988-2254
BUFFALO WAREHOUSE
1051 CLINTON STREET, BUFFALO, N.Y. 14206, DIRECT LINE TO TORONTO PLANT (716) 854-6700, TWX 610-492-1373

McCurdy Radio Industries reserves the right, without notice to make such changes in equipment, design, specifications, or components as progress in engineering or manufacturing techniques may warrant to improve the performance of the product.

# CS7000 SERIES INTERCOM SYSTEMS

## DESCRIPTION

The CS7000 Series Intercom is designed to meet the most sophisticated intercom requirements of professional systems, such as radio and TV broadcast stations, industrial, and commercial applications.

The CS7000 is completely solid-state, utilizing compact modules that plug into prewired 19-inch rack frames. A basic system comprises a switching matrix, input and output amplifiers, and a power supply (with separate frame). McCurdy Radio Industries can also supply key panels, microphones, and speakers as extra-cost options to complete the facility.

Three standard configurations are available in the CS7000 series: 10 x 10 (up to 10 inputs and 10 outputs), 18 x 20, and 36 x 40. These basic systems are calculated to provide the maximum in versatility without the need for customizing. Further, any of the above systems can be assembled initially with less than its full complement of modules, with an eye to future completion merely by addition of the switching modules and amplifiers.

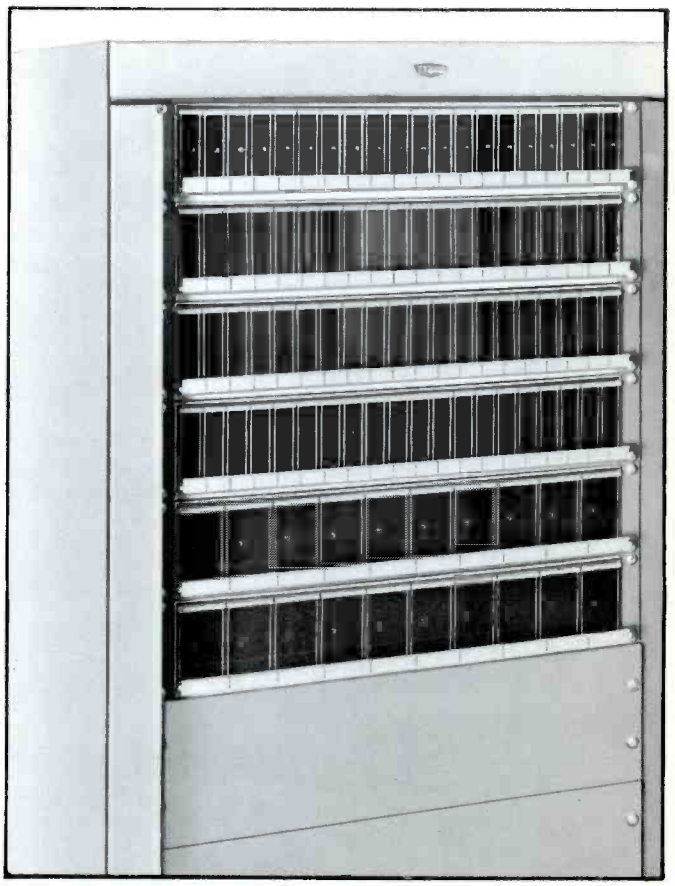

SMX12 SWITCHING MATRIX

The heart of the system is the crosspoint switching matrix which determines the audio routing from any input source to the desired destination. (Refer to the Intercom Functional Diagram).

At each crosspoint of the matrix, where communication is desired on an on-off basis, an SM11 reed relay circuit is installed. The relay is activated by 24 volts dc applied from a key panel. The reed relays are installed on SMX12 Switching Matrix cards, each of which holds up to six SM11's and plugs into a 19-inch prewired frame.

SMX12

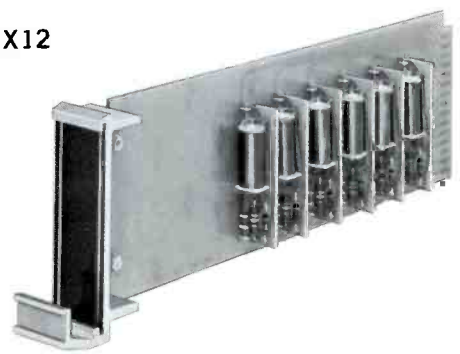

McCURDY RADIO INDUSTRIES LIMITED
108 CARNFORTH ROAD — TORONTO 16 — CANADA
(416) 751-6262
TELEX 02-21660

McCURDY RADIO INDUSTRIES INCORPORATED
1051 CLINTON STREET — BUFFALO — N.Y. 14206
(716) 854-6700

In some areas a continuous connection may be required between two stations, in which case the crosspoint is simple a 15,000-ohm resistor which provides the required isolation. Keys are not required for these crosspoints.

Isolation in the switching matrix, and privacy, are maintained by the fact that non-energized relays present an open circuit. In this manner, crosstalk in the relay crosspoints is better than 60 dB. In addition, the McCurdy CP7101 Key Panels (optional) provide extra contacts for operation of muting circuits in areas where there is danger of acoustical feedback.

## AP272 INPUT AMPLIFIER

An advanced feature of the CS7000 is the unique ability to handle carbon microphone, dynamic microphone, or line level inputs with a single type of input amplifier (AP272).

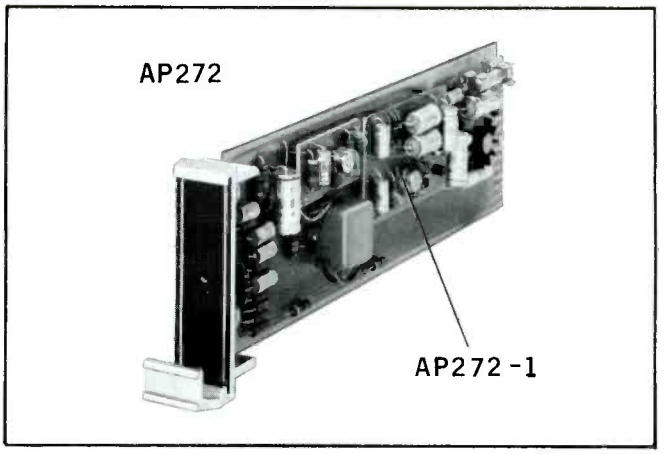


Also, the addition of an AP272-1 Compressor Module (optional) to the AP272 will compensate for wide variations in input level. The AP272-1 is an easily-installed plug-on module.

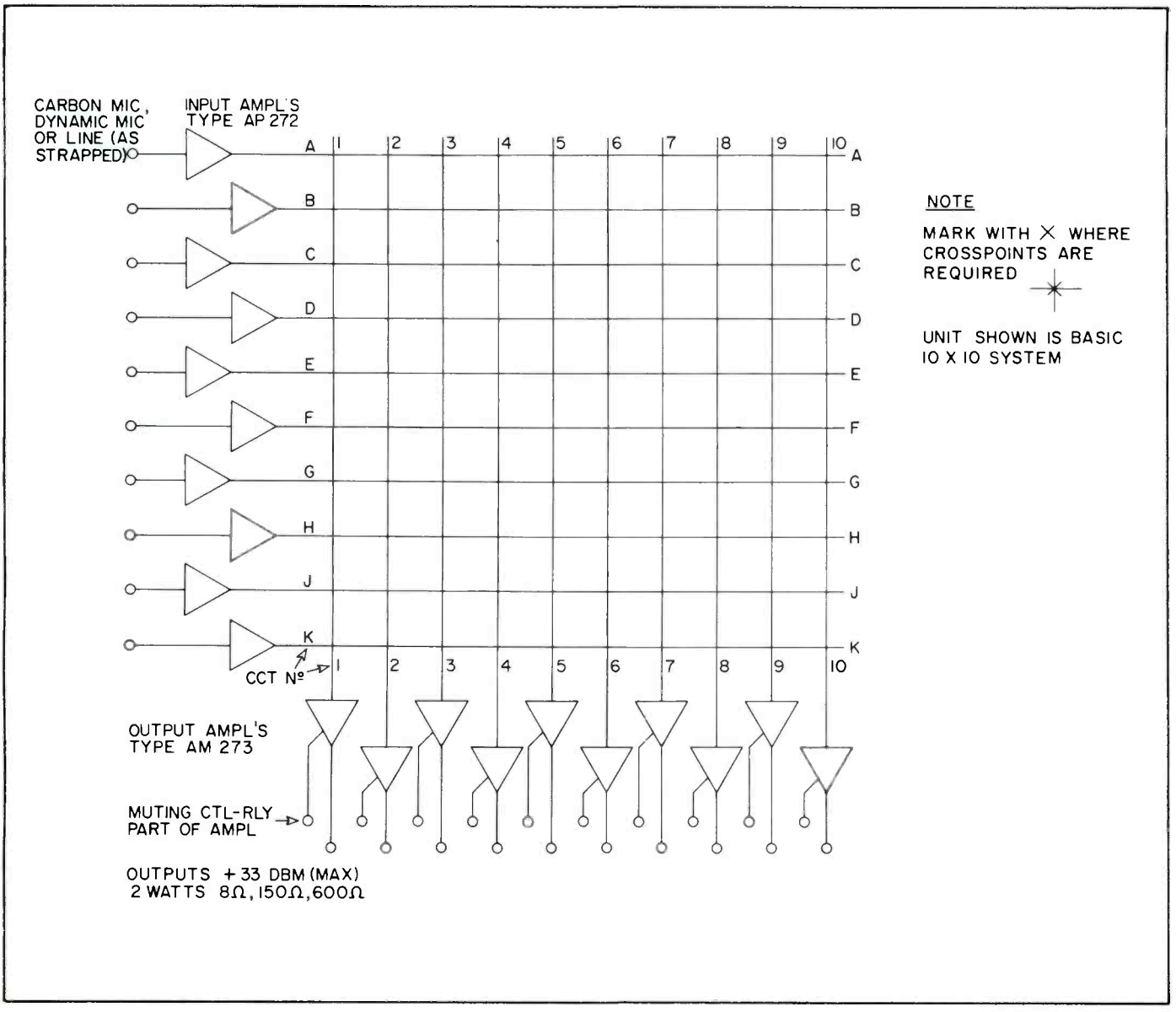


Typical Functional for 10 x 10 Intercom

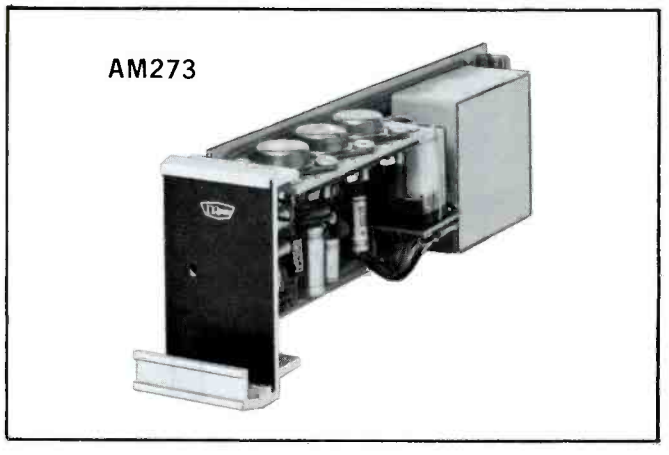


## AM273 OUTPUT AMPLIFIER

The AM273 Output Amplifier provides a full 2 watts output to an 8-ohm, 150-ohm, or 600-ohm load (150 ohms requires strapping on amplifier card). A plug-in muting relay is optional, but internal wiring for the relay is completed.

## POWER SUPPLY

One power supply provides sufficient power to operate the entire system since the supply rating is chosen according to the needs of the system.

## MECHANICAL DETAILS

The input amplifier and matrix circuits are built on glass-epoxy printed-circuit cards attached to extruded aluminum front panels. The panels are covered with dark blue plexiglass escutcheons. These modules are 53/64 in. wide and twenty modules can be accommodated in one FR904 Card Mounting Frame.

The output amplifiers are built on printed boards and are constructed similarly to the input amplifiers, except that they are 1-11/16 in. wide and ten can be fitted in one frame.

The power supply mounts in a separate frame below the output amplifiers, and is covered by a blank panel.

Blank modules are available to fill up unused spaces in each frame. The frames may be mounted in a standard 19-inch rack or stacked as a separate assembly.

Pertinent dimensions are shown in the Outline Diagrams for complete 10 x 10, 18 x 20, and 36 x 40 systems. These also show the quantities of modules required in each case.

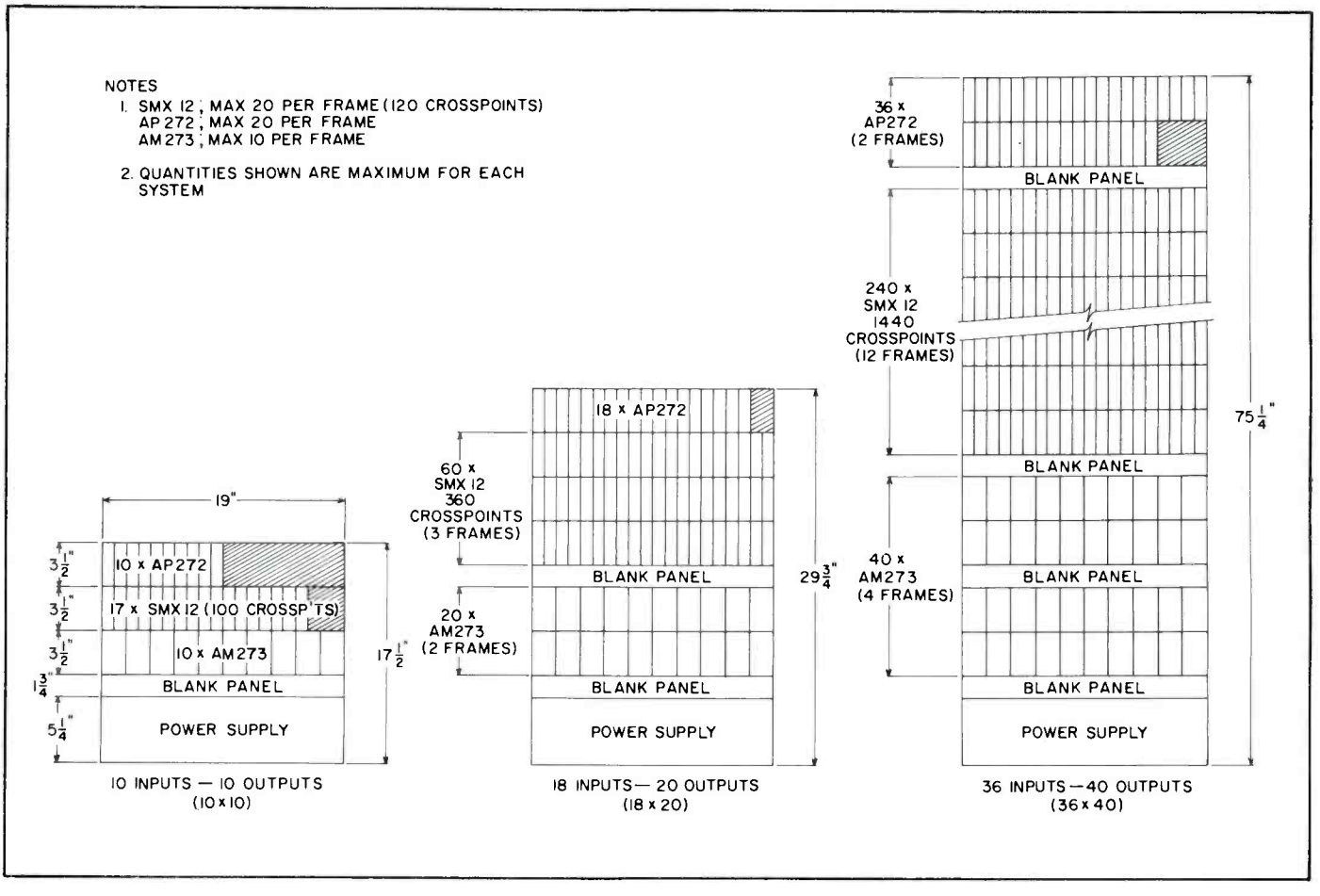


Frame Layouts and Dimensions for Basic CS7000 Intercoms

# SPECIFICATIONS

INPUT LEVELS and SOURCE IMPEDANCES

(1) Dynamic Mic; -50 dBm, 150 ohms.
(2) Carbon Mic; -15 dBm, 50 ohms.
(3) Line; 0 dBm, 600 ohms.

OUTPUT LEVEL

+33 dBm (2 watts).

LOAD IMPEDANCES

8 ohms or 600 ohms (150 ohms available by strapping on output amplifier card).

FREQUENCY RESPONSE

Within 5 dB 100 Hz to 10 kHz.

DISTORTION

Less than 2% 100 Hz to 10 kHz at rated output level.

SIGNAL-TO-NOISE

60 dB below -50 dBm input at full rated output.

CROSSTALK

-60 dB 100 Hz to 10 kHz at normal operating levels.

POWER REQUIREMENTS

117v ac, 50/60 Hz:
(1) 10 x 10; 220 va.
(2) 18 x 20; 300 va.
(3) 36 x 40; 450 va.

# ORDERING INFORMATION

STANDARD EQUIPMENT

(A) CS7000 Intercom in 10 x 10, 18 x 20, or 36 x 40 configuration. McCurdy Radio Industries will provide, on request, a Functional Diagram for indication of inputs, outputs, and crosspoints required.

(B) SMX 12 Switching Matrix. Up to six SM11 Switching Modules per SMX12 card. Available with 15,000-ohm resistors for continuous crosspoints.

(C) AP272 Preamplifier for line, carbon mic, or dynamic mic. Specify when ordering.

(D) AM273 2W Output Amplifier for 8-ohm, 150-ohm, or 600-ohm output. Specify when ordering.

(E) Power Supply.

OPTIONAL EQUIPMENT

(A) CP7101 Key Panel. The standard CP7101 contains five lever keys and is designed for flush-mounting in a desk top or panel cutout. The keys are 3-position (center OFF) and may be locking (L), non-locking (NL), or L-NL. Custom panels may be provided as required.

(B) LS7104 Speaker. The LS7104 is an 8-ohm enclosed speaker designed for placement on a desk. A volume control is included.

(C) Microphone Kit.

CP7101 Control Panel with CP7101-1 Recessed Panel

(D) Power Amplifiers for special paging applications are available as required.

(E) AM272-1 Compressor Module plugs onto AP272 Preamplifier.

(F) Muting Relay for AM273.

(G) SA10410 or SA10420 Equipment Rack.

Custom versions of the CS7000 Intercom may be engineered on request to suit any reasonable requirement.

*McCurdy Radio Industries reserves the right, without notice, to make such changes in equipment, design, specifications, or components as progress in engineering or manufacturing techniques may warrant to improve the performance of the product.*

# AT 235 & SA 236 series

# phono preamplifiers

McCurdy

# description

## AT235 PHONO PREAMPLIFIER

The McCurdy AT235 is a professional quality magnetic cartridge preamplifier primarily designed for broadcast applications. All components are mounted on a glass-epoxy printed circuit board which plugs into an SA10072 single unit frame, an SA236 preamplifier package or an FR904 universal frame. All low-level circuitry is contained within a shielded enclosure. The input connections from the cartridge are made to a front panel mounted phono connector with all other connections being made to a PC edge connector.

- Equalization is within ±0.5 dB of RIAA Equalization curve.
- The preamplifier input is matched to all popular magnetic cartridges. No resistor changes or other compensations are necessary.
- Output levels ranging from —20 dBm to +8 dBm (nominal) are available by changing the amount of feedback applied around the amplifier.
- The gain of the preamplifier is changed by varying the feedback resistor mounted on the PC edge connector.
- Roll-off frequencies of 5 kHz, 7 kHz, 10 kHz and 12 kHz are available for improved reproduction of noisy records.
- The roll-off is accomplished by FET switching, therefore, eliminating external audio runs for this function.
- Six balanced outputs are provided, two 600 ohm, two 150 ohm, one direct and one combining, which gives a mono output from a pair of AT235's.
- Front panel mounted Gain Trim and High Frequency Trim controls are provided for exact level matching in stereo applications.
- The low noise and distortion characteristics of the preamplifier will meet the most critical applications.
- The wide dynamic range available, in excess of 40 dB, will accommodate the output from any recording.

## SA236 PHONO PREAMPLIFIER PACKAGES

McCurdy Radio Industries offers two phono preamplifier packages, one monaural and one stereophonic, specifically designed for broadcast applications. Both incorporate the AT235 phono preamplifier and a fully regulated and shielded power supply.

- Six output levels from —20 dBm to +8 dBm (nominal) are available, selectable by a front panel mounted switch.
- Preamplifier outputs are wired to a rear panel mounted screw terminal strip.
- The SA236 is supplied with the 600 output wired. The 150 ohm and direct outputs are available on the PC edge connector.
- On stereo units, a 600 ohm mono output is provided.
- The 5 KHz roll-off control is wired to the output terminal strip.

The other roll-off frequencies are available on the PC edge connector.

- The SA236 is normally wired for operation on 117Volt 50/60 Hz power. Wiring for operation on 230 Volt 50/60 Hz is available as an option.

# specifications

**GAIN:**
24 dB to 52 dB, at 1 kHz, determined by value of external feedback resistor.

**INPUT LEVEL:**
5 mV nominal into 47K ohms resistive source. (Equivalent to – 44 dBm at 1 kHz, into 600 ohms, terminated). Maximum input level at 1 kHz, 700 mV into 47K ohms resistive source. (Equivalent to —3 dBm into 600 ohms, terminated) depending on gain strapping.

**INPUT IMPEDANCE:**
47000 ohms.

**OUTPUT LEVEL:**
(for 5 mV input) —20 dBm to +8 dBm (nominal) into 600 ohm outputs, +24 dBm maximum. +30 dBm maximum on direct output.

**OUTPUT IMPEDANCE:**
600 ohms or 150 ohms, balanced.

**LOAD IMPEDANCE:**
600 ohms or 150 ohms, balanced.

**DYNAMIC RANGE:**
greater than 40 dB, depending on gain strapping.

**FREQUENCY RESPONSE:**
Within ± 0.5 dB of RIAA equalization curve, 30 Hz to 15 kHz.

**ROLL-OFF:**
Externally selectable roll off frequencies of 5 kHz, 7 kHz, 10 kHz and 12 kHz.

**OUTPUT NOISE LEVEL:**
Better than —82 dBm for 30 dB gain at 1 kHz, (10 Hz to 100 kHz), (Equivalent to —112 dBm input noise).

**DISTORTION:**
0.25% maximum from 30 Hz to 15 kHz, at 10 dB above nominal level, typically 0.1%.

**POWER REQUIREMENTS:**
AT235: 48 Volts DC at 50 mA, maximum.
SA236: 117 Volts, 50/60 Hz (230 Volts optional), 13 VA.

**OVERALL DIMENSIONS:**
AT235: 1.75 in (45mm) wide, 3 in (76mm) high 10.25 in (260mm) deep.
SA236: 3.625 in (92mm) wide, 6.25 in (160mm) high, 12.375 in (315mm) deep.

**AMBIENT TEMPERATURE:**
0° to 55° C.

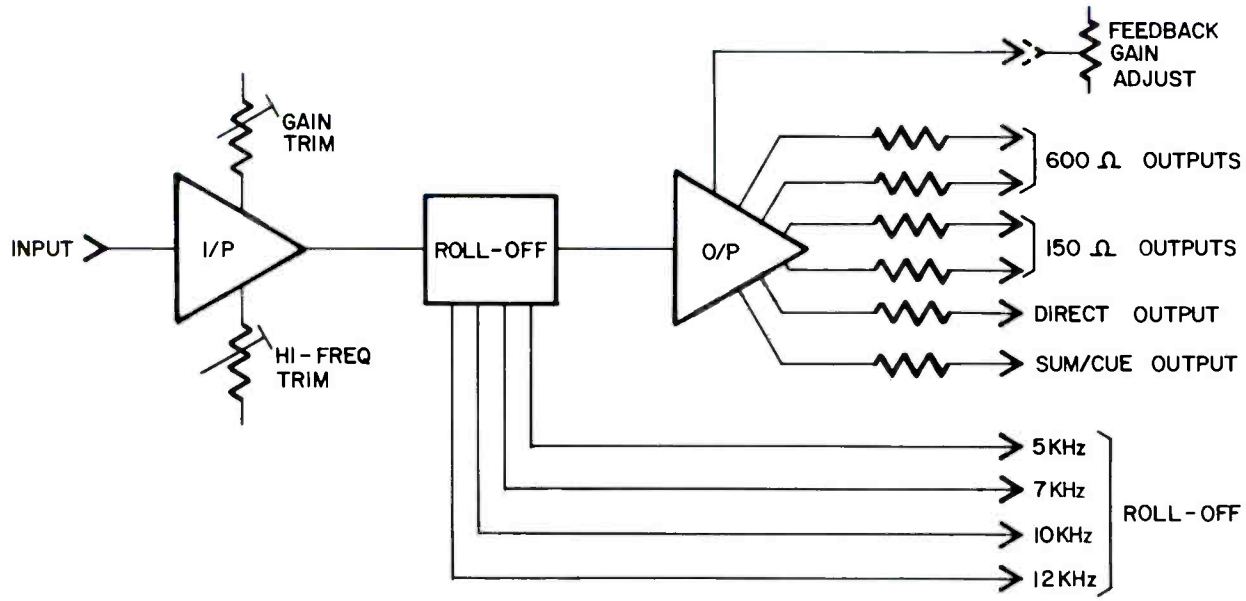
FEEDBACK
GAIN
ADJUST
GAIN
TRIM
600 Ω OUTPUTS
150 Ω OUTPUTS
INPUT
I/P
ROLL-OFF
O/P
DIRECT OUTPUT
SUM/CUE OUTPUT
HI-FREQ
TRIM
5KHz
7KHz
10KHz
12KHz
ROLL-OFF

AT 235

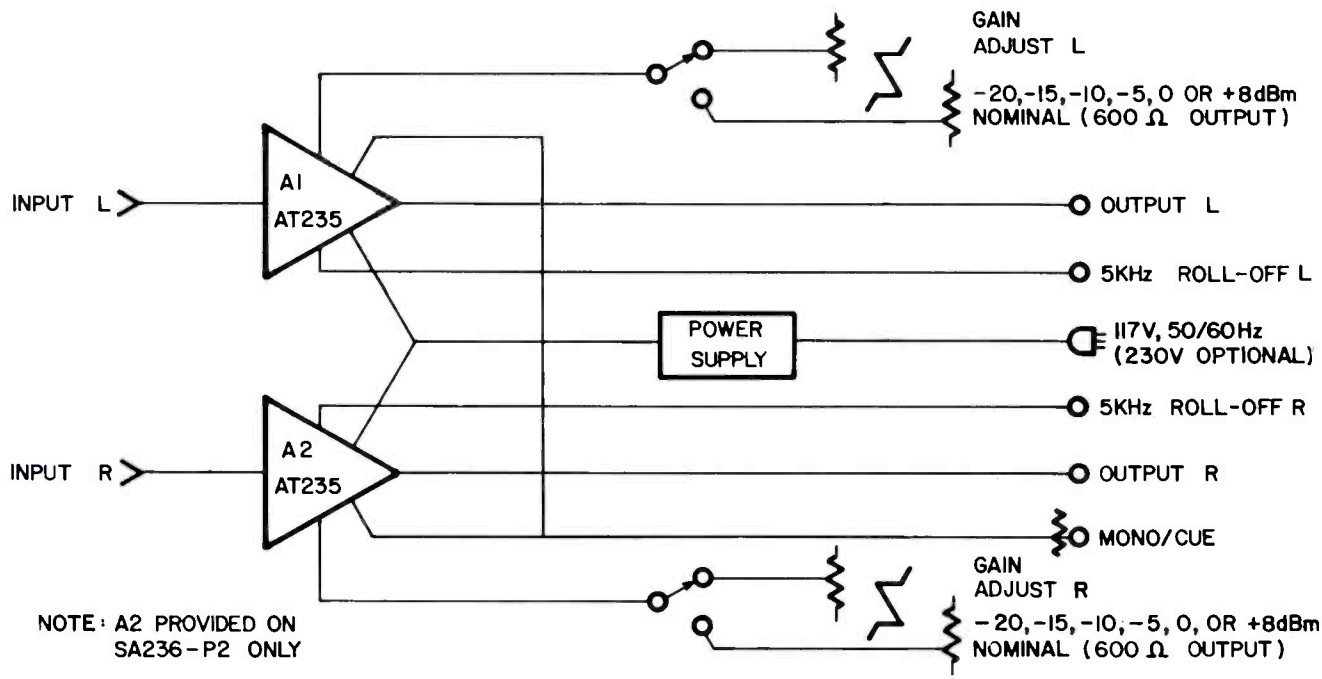
GAIN
ADJUST L
-20,-15,-10,-5,0 OR +8dBm
NOMINAL (600 Ω OUTPUT)
INPUT L
A1
AT235
OUTPUT L
5KHz ROLL-OFF L
POWER
SUPPLY
117V, 50/60Hz
(230V OPTIONAL)
5KHz ROLL-OFF R
INPUT R
A2
AT235
OUTPUT R
MONO/CUE
GAIN
ADJUST R
-20,-15,-10,-5,0, OR +8dBm
NOMINAL (600 Ω OUTPUT)
NOTE: A2 PROVIDED ON
SA236-P2 ONLY

SA 236

# ordering information

| | |
|---|---|
| AT235 | Phono Preamplifier |
| SA236-P1 | Mono Phono Preamplifier Package, includes one AT235 Phono Pre-amplifier. |
| SA236-P2 | Stereo Phono Preamplifier Package, includes two AT235 Phono Pre-amplifiers. |
| SA236-P1/230 | Mono Phono Preamplifier package, for operation on 230 Volt 50/60 Hz power. Includes one AT235 Phono Pre-amplifier. |
| SA236-P2/230 | Stereo Phono preamplifier package for operation on 230 Volt 50/60 Hz power. Includes two AT235 Phono Pre-amplifiers. |
| FR904 | Equipment frame for ten AT235's |
| SA10072 | Single mounting frame and connector for one AT235. |



Printed in Canada

**McCURDY RADIO INDUSTRIES LIMITED**
108 CARNFORTH ROAD, TORONTO, ONTARIO M4A 2L4 (416) 751-6262, TELEX 06-963533, TWX 610-492-1373

**McCURDY RADIO INDUSTRIES INC.**
UNITED STATES HEAD OFFICE
1711 CARMEN DRIVE, ELK GROVE VILLAGE, ILLINOIS 60007, (312) 640-7077, TWX 910-222-0436
EAST COAST OFFICE
223 WEST SADDLE RIVER ROAD, SADDLE RIVER, N.J. 07458, (201) 327-0750, TWX 710-988-2254
BUFFALO WAREHOUSE
1051 CLINTON STREET, BUFFALO, N.Y. 14206, DIRECT LINE TO TORONTO PLANT (716) 854-6700, TWX 610-492-1373

McCurdy Radio Industries reserves the right, without notice to make such changes in equipment, design, specifications, or components as progress in engineering or manufacturing techniques may warrant to improve the performance of the product.

# AM484, AM487 & DA505

# monitor amplifiers, distribution amplifiers & systems

DA505 DISTRIBUTION SYSTEM

McCurdy

# description

The McCurdy AM484 and AM487 are professional quality audio amplifiers designed primarily for use as monitor or distribution amplifiers in broadcast or commercial applications. Each amplifier, complete with power supply, is housed in a compact rigid, all-metal case designed for rack mounting in an FR905, 5 1/4 inch, equipment frame, which holds up to six amplifiers.

The McCurdy DA505 audio distribution system consists of a pre-wired FR905 equipment frame supplied with up to six AM487 amplifiers.

- Fully protected, conservatively rated silicon solid-state circuitry
- Cool running, all heat is radiated by a generously sized front-mounted heatsink
- Mute circuit provides for remote-controlled partial muting of output and output muting during "power-up" to prevent undesirable transients
- Gain control, power switch, fuse and LED indicators for power and mute conveniently mounted on the front panel
- Two rear panel-mounted connectors provided for all circuit connections
- Balanced, shielded, transformer-coupled input circuit with built-in connector-strapped loss pad
- Multi-tapped isolating output transformer on AM487, direct 8 ohm transformerless output on AM484
- Provision is made for separate feedback gain control, via a connector-mounted controlling resistor, of both the input and output amplifiers, allowing the optimum signal to noise ratio to be realized for any gain setting
- Up to 75,600 ohm, output splits can be driven by the AM487 amplifiers

# specifications

INPUT LEVEL:
—20 dBm, 600 ohms, balanced/unbalanced, nominal

INPUT IMPEDANCE:
6000 ohms

OUTPUT LEVEL:
20 Watts, 8 ohms.
+43 dBm, 600 ohms (AM487 only)

OUTPUT IMPEDANCE:
AM484, 8 ohms,
AM487, 4, 8, 16, 150 or 600 ohms, strappable

OUTPUT SPLITS (AM487):
75 maximum, +18 dBm, 600 ohm on 16 ohm output.

OUTPUT SPLIT ISOLATION:
(AM487): 55 dB, 30 Hz to 15 KHz

GAIN:
63 dB maximum. Variable by means of feedback resistors

FREQUENCY RESPONSE:
± 0.5 dB, 30 Hz to 20 KHz

SIGNAL TO NOISE:
80 dB minimum for 0 dB input and 20 W output

DISTORTION:
0.25% maximum at 20 W output, 30 Hz to 20 KHz

MUTING:
10 dB partial mute (full mute available)

POWER REQUIREMENTS:
115V (230V optional), 50/60 Hz, 120 VA maximum (each amplifier)

DIMENSIONS:
AM484 & AM487, 2.82 in. (72mm) wide, 4.82 in. (122mm) high, 14.2 in. (361mm) deep
DA505, 5.25 in. (134mm) high, 19 in. (482mm), 14.5 in. (375mm) deep

WEIGHT:
AM484, 11 lbs. (5 kg)
AM487, 13 lbs. (5.9 kg)
DA505, frame only 20 lbs. (9.1 kg)

# functional

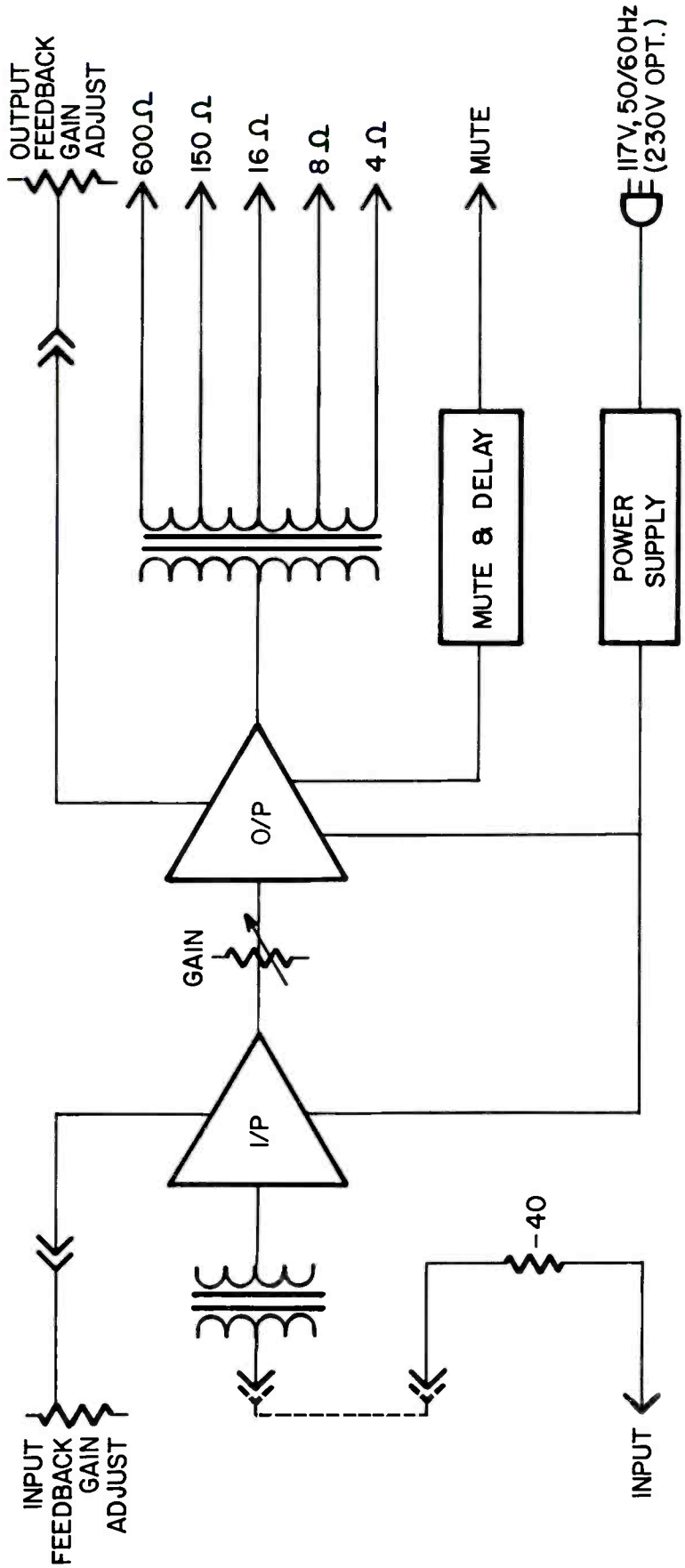


AM487 MONITOR/DISTRIBUTION AMPLIFIER

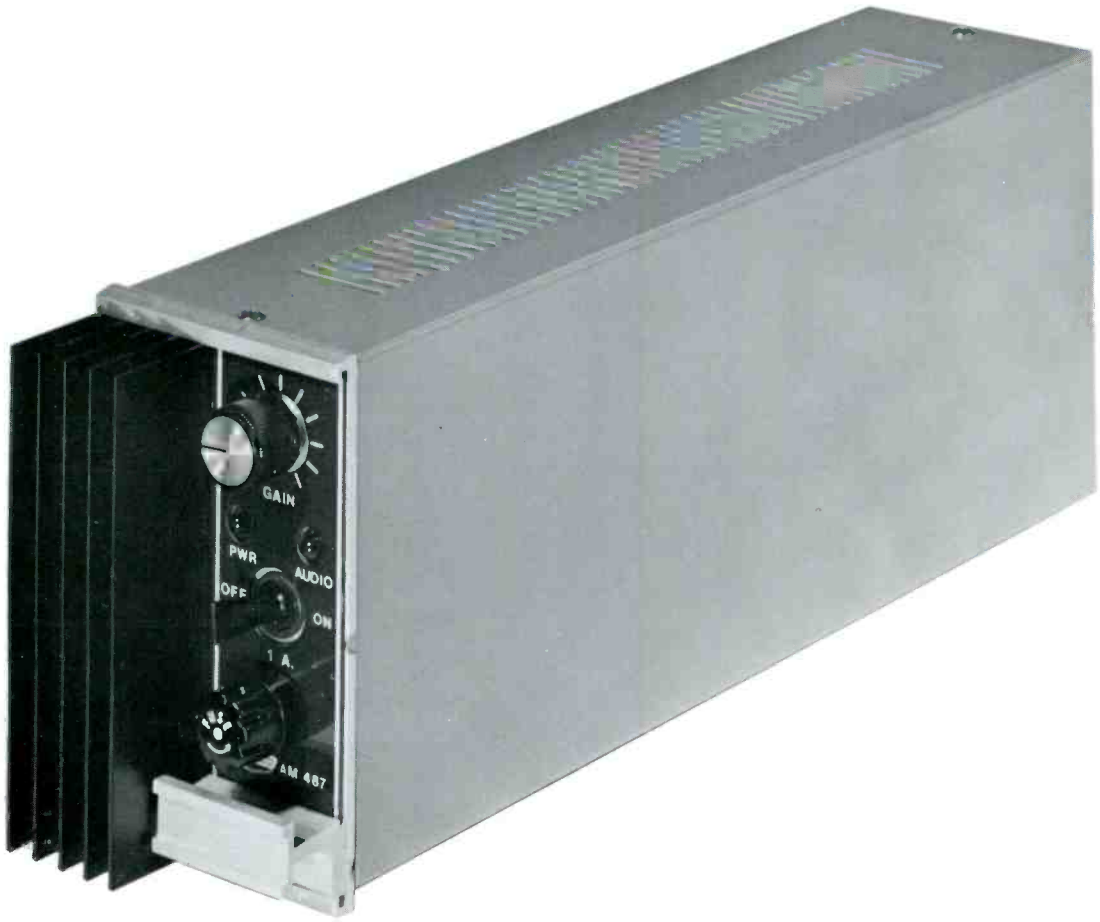


INDIVIDUAL AM487 AMPLIFIER, TYPICAL OF AM484

# ordering information

AM484 Monitor Amplifier, 20 W, 8 ohm transformerless output, 115 V operation

AM484/230 Monitor Amplifier, 20 W, 8 ohm transformerless output, 230 V operation

AM487 Monitor/Distribution Amplifier, 20 W, transformer output, 115 V operation

AM487/230 Monitor/Distribution Amplifier, 20 W, transformer output, 230 V operation

DA505 Prewired FR905 equipment frame to accept up to 6 six AM487 Amplifiers (Amplifiers to be ordered separately).



Printed in Canada

**McCURDY RADIO INDUSTRIES LIMITED**
108 CARNFORTH ROAD, TORONTO, ONTARIO M4A 2L4 (416) 751-6262, TELEX 06-963533, TWX 610-492-1373

**McCURDY RADIO INDUSTRIES INC.**
UNITED STATES HEAD OFFICE
1711 CARMEN DRIVE, ELK GROVE VILLAGE, ILLINOIS 60007, (312) 640-7077, TWX 910-222-0436
EAST COAST OFFICE
223 WEST SADDLE RIVER ROAD, SADDLE RIVER, N.J. 07458, (201) 327-0750, TWX 710-988-2254
BUFFALO WAREHOUSE
1051 CLINTON STREET, BUFFALO, N.Y. 14206, DIRECT LINE TO TORONTO PLANT (716) 854-6700, TWX 610-492-1373

McCurdy Radio Industries reserves the right, without notice to make such changes in equipment, design, specifications, or components as progress in engineering or manufacturing techniques may warrant to improve the performance of the product.

# AT131

# ALL-SILICON SOLID-STATE EQUALIZED PREAMPLIFIER

## DESCRIPTION

The AT131 is an all-silicon transistorized preamplifier designed for operation with monaural or stereophonic magnetic phono cartridges. In addition to raising the cartridge output to a usable signal level, the unit provides playback equalization in accordance with the RIAA standard reproducing curve. The preamplifier contains a roll-off filter that can be switched in when playing "noisy" records. The input impedance is adjustable to provide any required cartridge loading from 9,000 to 75,000 ohms. Equalization is independent of cartridge inductance.

An input gain control provides adjustment for cartridge output levels, and permits the AT131 to accommodate a wide recorded signal dynamic range. Careful circuit design and the use of close-tolerance components result in exceptionally accurate and consistent gain vs. response characteristics, and make the unit particularly suitable for use in pairs in stereo applications.

The AT131 is designed for mounting on, or close to, the turntable enclosure. The unit may be powered from a PS890 Power Supply or a similar source of rectified 36 volts. The preamplifier contains a built-in dc filter, and no primary filtering in the power supply is required as long as the line frequency is 50 cps or higher and full-wave rectification is employed.

McCURDY RADIO INDUSTRIES LIMITED
108 CARNFORTH ROAD — TORONTO 16 — CANADA
(416) 751-6262
TELEX 02-21660

McCURDY RADIO INDUSTRIES INCORPORATED
1051 CLINTON STREET — BUFFALO — N.Y. 14206
(716) 854-6700

## SPECIFICATIONS

TRANSDUCER GAIN (at 1 kc)
36 db ± 1 db max (5 mv input for -14 dbm ± 1 db output)

FREQUENCY RESPONSE (see curve)
Without roll-off filter: within ± 1 db of RIAA equalization curve, 30 cps to 15 kc

Roll-off greater than 14 db from RIAA response at 10 kc

OUTPUT NOISE LEVEL
-72 dbm nominal, -64 dbm max, with 510-ohm input termination

HARMONIC DISTORTION
Less than 0.5% at +6 dbm output, 30 cps to 15 kc

INTERMODULATION DISTORTION (measured using a passive reverse RIAA network)

Less than 1% at a peak level of +9 dbm with the following frequencies mixed at 1:1 and 4:1 ratios;

(1) 60 cps and 2 kc
(2) 60 cps and 7 kc
(3) 60 cps and 12 kc

POWER OUTPUT
+6 dbm, 30 cps to 15 kc

INPUT LEVELS
5 mv nominal, 3v max

GAIN CONTROL RANGE
26 db ± 2 db

INPUT IMPEDANCE (variable)
9,000 ohms to 75,000 ohms

LOAD IMPEDANCE
150 ohms or 600 ohms, balanced or unbalanced

OUTPUT IMPEDANCE
Less than 40 ohms at mid-frequency, with 150-ohm load

POWER REQUIREMENTS
36 v dc at 20 ma; filtered or unfiltered

AMBIENT TEMPERATURE
55°C max

DIMENSIONS
1-11/16 in. wide, 3-1/16 in. high, 12-3/4 in. long

SHIPPING WEIGHT
3-1/4 lb

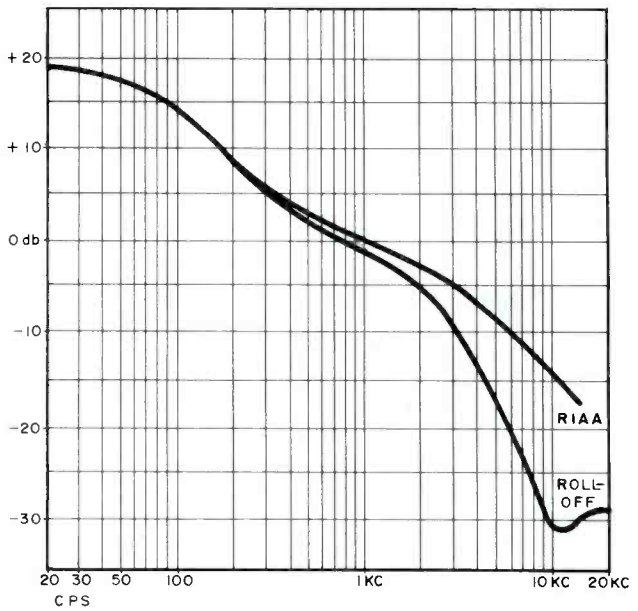


Typical Frequency Response

## ORDERING INFORMATION

Order AT131 Equalized Preamplifier; the RIAA/ROLL-OFF switch, escutcheon plate, cable, and plug are included at no extra cost.

ACCESSORIES (not supplied)
One PS890 Power Supply, to supply six AT131 Preamplifiers.

*McCurdy Radio Industries reserves the right, without notice, to make such changes in equipment, design, specifications, or components as progress in engineering or manufacturing techniques may warrant to improve the performance of the product.*

# AT240
# SOLID-STATE MICROPHONE PREAMPLIFIER

## DESCRIPTION

The AT240 is a silicon-transistorized microphone preamplifier designed for use in audio consoles or in any system requiring efficient amplification of low level inputs. The extremely low noise characteristic and wide input dynamic range of the AT240 permit amplification of inputs from -60 dbm to -20 dbm with negligible distortion. The high input impedance reduces source loading to a minimum, and the low output impedance provides maximum isolation against crosstalk when used in consoles or similar systems. The amplifier frequency response of 20 cps to 20 kc (within 0.5 db) is maintained over its entire range of operating levels.

The amplifier is compactly assembled using a contemporary dual glass-epoxy card design with precision gold-plated printed circuitry to ensure uniform high performance. Advanced design techniques, utilizing silicon transistors and high quality components, combine to produce a unit of exceptional performance and reliability. The AT240 can withstand abnormal signal conditions, such as excessive drive or overloading, with instant return to normal performance when the adverse conditions are removed.

SA10004 Mounting Frame

Up to twelve AT240 modules can be accommodated in one SA10004 19-inch rack mounting frame, and the complete assembly occupies only 1-3/4 inches vertically. When integrated within a system, these can be operated from a centralized PS874 power supply; when a separate rack installation is required, the SA10004 will accommodate up to ten AT240 modules and a PS876 power supply.

McCURDY RADIO INDUSTRIES LIMITED
108 CARNFORTH ROAD — TORONTO 16 — CANADA
(416) 751-6262
TELEX 02-21660

McCURDY RADIO INDUSTRIES INCORPORATED
1051 CLINTON STREET — BUFFALO — N.Y. 14206
(716) 854-6700

## SPECIFICATIONS

TRANSDUCER GAIN
40 db ± 1 db

FREQUENCY RESPONSE
20 cps to 20 kc, within 0.5 db (ref 1 kc)

RELATIVE INPUT NOISE
-124 dbm, unweighted, measured over 10 cps to 100 kc bandwidth*
-127 dbm, unweighted, measured over 10 cps to 20 kc bandwidth*

*Bandwidth specified at -3 db points.

HARMONIC DISTORTION
Less than 0.25% at +20 dbm output, 50 cps to 20 kc
Less than 0.5% at +20 dbm output, 20 cps to 20 kc

INPUT LEVELS
-60 dbm nominal, -20 dbm max

OUTPUT LEVEL
+20 dbm max

SOURCE IMPEDANCE
37.5 or 150 ohms balanced or unbalanced

INPUT IMPEDANCE
Greater than 10 times source impedance

OUTPUT IMPEDANCE
Approximately 25 ohms

LOAD IMPEDANCE
600 ohms unbalanced

POWER REQUIREMENTS
36v dc, 40 ma, from PS876 or equivalent

AMBIENT TEMPERATURE
65°C max

OVERALL DIMENSIONS
1-3/16 in. wide, 1-3/4 in. high, 9-1/2 in. deep

WEIGHT
14 oz

## ORDERING INFORMATION

ORDER
AT240 Microphone Preamplifier

OPTIONAL ACCESSORIES
1. SA10004 Mounting Frame.
2. PS876 Power Supply.

# AT242

# SOLID-STATE UNIVERSAL AUDIO AMPLIFIER

## DESCRIPTION

The AT242 is a plug-in, universal, solid-state amplifier designed for professional audio applications in the radio, television, and sound recording industries. The state-of-the-art circuitry utilizing silicon transistors enables the amplifier to achieve an unusually high degree of flexibility and dependability.

The 1-watt output capability, combined with the high gain and low input noise, allows the AT242 to be employed for low level microphone mixing, intermediate booster, or program output amplifier applications. The gain is strappable incrementally between 50 and 70 db and maintains a low input noise of -126 dbm.

The amplifier easily accommodates a wide dynamic range of input levels from -60 to -20 dbm. The distortion is extremely low with a specified maximum of 0.25% up to +30 dbm for all frequencies between 50 hz and 20 khz.

The AT242 plugs into an SA10004 standard 19-inch mounting frame which accommodates up to six units and occupies only 1-3/4 inches vertically. The unit requires 36 to 48 volts dc from a regulated source. The PS874 power supply provides 36 volts and is capable of supplying up to twelve AT242 amplifiers.

All conditional strapping is performed on the frame connector. The wiring configuration of this connector determines the amplifier function, which permits simple interchange of any amplifier within the system without regard to the specific mode of operation.

SA10004 Mounting Frame

The input is balanced and may be connected for 37.5, 150, or 600 ohms source impedance. The input transformer is carefully designed to reduce susceptibility to induced hum and is electrostatically and magnetically shielded. The output is balanced and may be connected for 150 or 600 ohms load impedance. The output presents the low impedance necessary for maximum isolation between resistive output splitter networks. Output short-circuit protection is incorporated to protect the output stage and power supply regulator components.

McCURDY RADIO INDUSTRIES LIMITED

TORONTO CANADA
DANVERS MASS.

An internal active decoupling network gives the amplifier a high degree of isolation from the centralized power supply and eliminates inter-system crosstalk. The amplifier interstage connections are returned to the frame connector to permit incorporation of a variable gain control or special effects filter for added flexibility.

The AT242 is unconditionally stable with or without input and output loads and will operate satisfactorily between balanced or unbalanced source and load circuits.

## SPECIFICATIONS

TRANSDUCER GAIN
50 to 70 db ± 1 db; set by external resistor

FREQUENCY RESPONSE
20 hz to 20 khz within 0.5 db (ref 1 khz)

RELATIVE INPUT NOISE (unweighted)
-123 dbm measured over 10 hz to 100 khz bandwidth* (noise power bandwidth 157 khz)
-126 dbm measured over 10 hz to 20 khz bandwidth* (noise power bandwidth 31.4 khz)

* Bandwidth specified at -3 db points.

HARMONIC DISTORTION
Less than 0.25% at +30 dbm output, 50 hz to 20 khz
Less than 0.5% at +30 dbm output, 30 hz to 20 khz

INTERMODULATION DISTORTION
Less than 0.5% at peak level of +33 dbm (2 watts) with the following frequencies mixed at 1:1 and 4:1 ratios:
(1) 60 hz and 2 khz
(2) 60 hz and 7 khz
(3) 60 hz and 12 khz

INPUT LEVELS
-60 dbm nom, -14 dbm max, with terminated input

OUTPUT LEVEL
-10 dbm nom, +30 dbm max

SOURCE IMPEDANCE
37.5, 150, or 600 ohms, balanced or unbalanced

INPUT IMPEDANCE
Greater than 10 times source impedance

LOAD IMPEDANCE
150 or 600 ohms, balanced or unbalanced

OUTPUT IMPEDANCE
1/3 of load impedance

POWER REQUIREMENT
36v to 48v dc regulated, 120 ma, from PS874 (36v) or equivalent 48v supply

AMBIENT TEMPERATURE
0°C to 65°C

OVERALL DIMENSIONS
2-1/2 in. wide, 1-11/16 in. high, 9-1/2 in. deep

WEIGHT
2 lb

## ORDERING INFORMATION

ORDER
AT242 Systems Amplifier

OPTIONAL ACCESSORY
SA10004 Mounting Frame, to accommodate six amplifiers

# MT244 MT245

# AUDIO TRANSFORMER MODULES

## DESCRIPTION

The MT244 and MT245 modules are high quality audio transformers intended primarily for use in audio consoles or other integrated audio systems. The MT244 is used in matching applications for levels between -22 dbm and +18 dbm; the input is strappable for 150 or 600 ohms and the output is fixed at 600 ohms. The MT245 is used for high-impedance bridging inputs of -10 dbm or greater, as in line input applications; the input is strappable for 5,000 or 20,000 ohms and the output is fixed at 600 ohms. Both transformers exhibit wide-band frequency response to ensure that the overall response of the system is maintained.

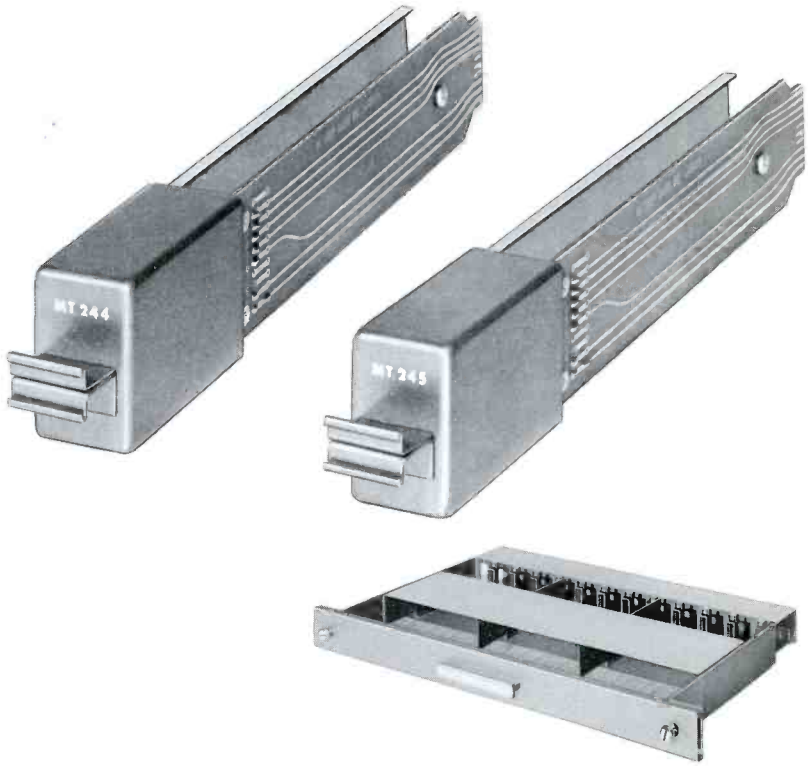


SA10004 Mounting Frame

Each transformer is compactly assembled using a contemporary dual glass-epoxy card design with precision gold-plated printed circuitry to ensure uniform performance and maximum reliability. Internal electrostatic shielding is employed, and the heavy external shield provides maximum isolation from surrounding circuitry.

Up to twelve MT244 or MT245 modules can be accommodated in one SA10004 19-inch rack mounting frame, and the complete assembly occupies only 1-3/4 inches vertically. The transformers are mechanically interchangeable with the AT240 series of amplifiers, which permits versatility in selection of system facilities. Input and output wiring and transformer strapping are easily accomplished at the connectors on the rear of the frame.

McCURDY RADIO INDUSTRIES LIMITED
108 CARNFORTH ROAD — TORONTO 16 — CANADA
(416) 751-6262
TELEX 02-21660

McCURDY RADIO INDUSTRIES INCORPORATED
1051 CLINTON STREET — BUFFALO — N.Y. 14206
(716) 854-6700

## SPECIFICATIONS

FREQUENCY RESPONSE
20 cps to 20 kc, within 0.5 db (ref 1 kc)

POWER LEVELS
MT244: -22 dbm to +18 dbm
MT245: -10 dbm to +24 dbm

INPUT IMPEDANCES
MT244: 150 or 600 ohms
MT245: 5,000 or 20,000 ohms

OUTPUT IMPEDANCE
600 ohms

AMBIENT TEMPERATURE
65°C max

OVERALL DIMENSIONS
1-3/16 in. wide, 1-3/4 in. high, 9-1/2 in. deep

WEIGHT
12 oz

## ORDERING INFORMATION

ORDER
1. MT244 Audio Matching Transformer.
2. MT245 Audio Bridging Transformer.

OPTIONAL ACCESSORY
SA10004 Mounting Frame.

*McCurdy Radio Industries reserves the right, without notice, to make such changes in equipment, design, specifications, or components as progress in engineering or manufacturing techniques may warrant to improve the performance of the product.*

# AT264

# SOLID-STATE MINI-CUE AMPLIFIER

- A compact, self-contained, cue unit with built-in regulated power supply and speaker.
- Dual bridging-input combining network, designed to bridge at program line level.
- Features all silicon solid-state circuitry utilizing plug-in integrated-circuit amplifier.
- Incorporates cue on/off switch and front panel gain control for convenience.
- Compact 19-inch panel-mount permits mounting in standard EIA rack or tape units.

Figure 1. AT264 Mini-Cue Amplifier.

## DESCRIPTION

The AT264 'Mini-Cue' is a compact, self-contained, cue amplifier/speaker assembly specifically designed for low-power cueing applications. It is especially suitable in providing speaker cue facilities for audio tape recorder/reproducer consoles. Where adequate preamplifier level is available it may also be used as a turntable cue amplifier.

The complete unit is assembled on a 3-1/2 inch by 19-inch standard EIA rack panel for universal ease of mounting. This panel mounts the operating controls consisting of a gain control, cue on/off switch, fuse, and pilot lamp. All circuitry is silicon solid-state with an integrated circuit providing amplification, and a regulated supply powering the amplifier.

### FUNCTIONAL DESCRIPTION

A block diagram of the AT264 Mini-Cue is shown in Figure 2. The circuitry consists basically of an input mixing network, an integrated-circuit amplifier, a loudspeaker, and a power supply.

The input mixing network provides two balanced, transformerless, isolated, bridging inputs for monaural or stereo cueing; the inherent isolation provided by this network is maintained between channels when using the balanced inputs in a stereo application. Also

McCURDY RADIO INDUSTRIES LIMITED
108 CARNFORTH ROAD — TORONTO 16 — CANADA
(416) 751-6262
Telex 02-21660

McCURDY RADIO INDUSTRIES INCORPORATED
57 N. PUTNAM ST. — DANVERS — MASS. — 01923
(617) 774-6411

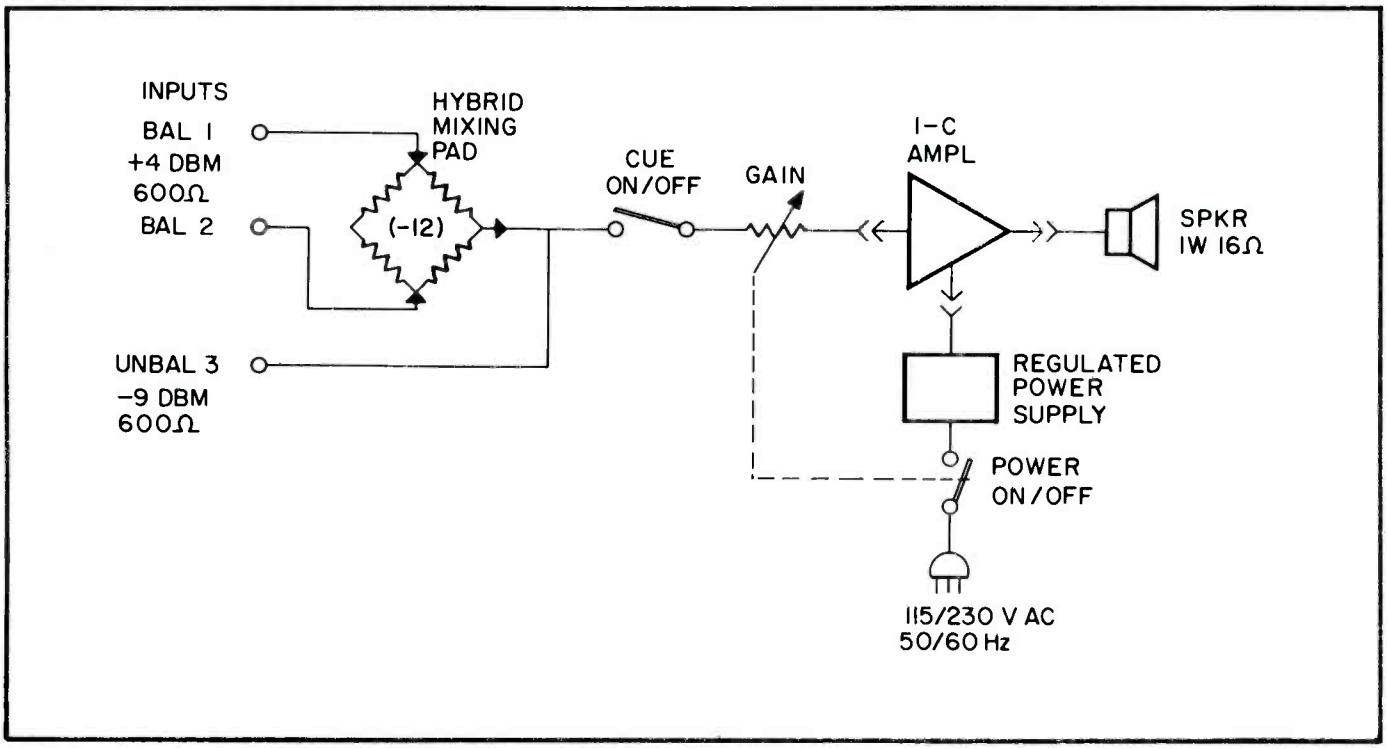


Figure 2. Block Diagram of AT264 Mini-Cue.

provided is a single, unbalanced, bridging input for monaural cueing (in order to maintain isolation when using the stereo inputs, the mono input should not be used at the same time).

The amplifying components are combined in a plug-in integrated circuit to facilitate servicing of the AT264. A front-panel gain control permits varying the cue level, while a cue on/off switch provides an instant muting facility. Maximum output level is 1 watt via a 2-inch X 8-inch 16-ohm loudspeaker.

The power supply is a transformer-type employing a series regulator for added isolation and stability. The transformer may be strapped for 117- or 230- volt operation. The power switch is operated by turning the gain control from its extreme CCW position.

Installation connections are made to a solder-pin terminal board at the rear of the assembly. The power cable plugs into a standard grounding-type ac receptacle. All hardware is provided for installing the AT264 in a standard 19-inch rack.

## ADAPTER KIT FOR AMPEX TAPE UNITS

An AT264/1 Adapter Kit is available, as a cost option, for installing the AT264 Mini-Cue in an Ampex AG440 or AG445 Tape Unit. This kit contains all hardware, wire, and instructions required to add the Mini-Cue amplifier to any Ampex AG440 series machines.

Figure 3. AT264 Mini-Cue Mounted in Ampex AG440 Tape Machine.

# SPECIFICATIONS

MAX GAIN (±2 db)

(1) Inputs 1 and 2 (bal): 29 db.

(2) Input 3 (Unbal): 41 db.

FREQUENCY RESPONSE (ref 1 khz)

(1) Inputs 1 and 3: ±1 db, 50 hz to 15 khz.

(2) Input 2: ±2.5 db, 50 hz to 15 khz.

NOISE

Signal-to-noise ratio: Better than 70 db below 1 watt output.

HARMONIC DISTORTION

Less than 1.5% at 1 watt output, 50 hz to 15 khz.

INPUT LEVELS

Designed to bridge nominal +8 vu. Maximum levels at full gain:

(1) Inputs 1 and 2; +4 dbm.

(2) Input 3; -9 dbm.

OUTPUT LEVEL

1 watt continuous sine wave.

SOURCE IMPEDANCE

(1) Inputs 1 and 2: 600 ohms balanced.

(2) Input 3: 600 ohms unbalanced.

INPUT IMPEDANCES

(1) Inputs 1 and 2: 32,000 ohms.

(2) Input 3: 17,000 ohms.

POWER REQUIREMENT

117v/230v single phase, 50/60 hz, 6 va.

OVERALL DIMENSIONS

19 in. wide, 3-1/2 in. high, 3 in. deep.

WEIGHT

5 lb.

# ORDERING INFORMATION

ORDER: AT264 Mini-Cue Amplifier.

OPTIONAL EQUIPMENT

(1) AT264/1 Adapter Kit for Ampex AG440-1 Series Tape Machines (Monaural).

(2) AT264/2 Adapter Kit for Ampex AG440-2 Series Tape Machines (Stereo).

# AM408

# ALL-SILICON SOLID-STATE MONITOR AMPLIFIER

## DESCRIPTION

The AM408 is a self-contained, all-silicon, solid-state power amplifier for use in monitoring or other broadcast applications. The unit delivers 10 watts continuous sine-wave power over the full audio spectrum at less than 0.5% harmonic or intermodulation distortion. Provision is made for use as a bridging amplifier simply by changing a plug-in transformer and making connections at the plugs on the rear of the amplifier.

Increased compactness and reliability are achieved by the use of silicon solid-state devices throughout. The properties of silicon enable the devices to operate at higher ambient temperatures without the need for bulky heat dissipators. Silicon transistor durability reduces the need for precautions against overloading or overdriving the amplifier.

The unit is housed in a slide-out chassis which plugs into an SA10007 mounting frame, allowing easy access for servicing. All connections are accessible at the rear of the mounting frame, which accommodates four amplifiers. The on-off switch, pilot light, local gain control, and power fuses are located on the front panel.

SA10007 Mounting Frame

An optional feature of the AM408 is the remote gain control employing a Light Dependent Resistor. When used, this system replaces the front panel gain control simply by making appropriate connections on the printed circuit board, and plugging the LDR into its socket. The LDR consists of four photocells and a filament mounted in an opaque enclosure. The cells are illuminated by the filament which is energized from a stable voltage source. A variation in filament voltage, by means of the remote gain potentiometer, varies the illumination applied to the cells and so varies the total resistance of the circuit. The advantage of this circuit is that the gain may be controlled remotely by a dc voltage, thereby eliminating audio from the remote control circuit.

Another feature is the inclusion of a muting relay which can be connected to external circuits requiring this facility.

McCURDY RADIO INDUSTRIES LIMITED
108 CARNFORTH ROAD — TORONTO 16 — CANADA
(416) 751-6262
TELEX 02-21660

McCURDY RADIO INDUSTRIES INCORPORATED
57 N. PUTNAM ST. — DANVERS — MASS. — 01923
(617) 774-6411

## SPECIFICATIONS

GAIN (variable)

Matched input, 80 db ± 1 db max (74 db ± 1 db with terminated input)

Bridged input, 60 db ± 1 db max

FREQUENCY RESPONSE (ref 1 kc)

30 cps to 20 kc within 1 db

SIGNAL-TO-NOISE

75 db below 10 watts (+40 dbm) power level with unloaded input levels of -40 dbm or -20 dbm

RELATIVE INPUT NOISE

-115 dbm (unweighted)

HARMONIC DISTORTION

Less than 0.5% from 30 cps to 20 kc at 10 watts (+40 dbm) power level

INTERMODULATION DISTORTION

Less than 0.5% at peak level of 20 watts with the following frequencies mixed at 1:1 and 4:1 ratios:

(1) 60 cps and 2 kc
(2) 60 cps and 7 kc
(3) 60 cps and 12 kc

POWER OUTPUT

10 watts (+40 dbm), 30 cps to 20 kc (typical peak power 25 watts at mid-frequency)

INPUT LEVELS

Matched input, -40 dbm nominal, -20 dbm max

Bridged input, -20 dbm nominal to +2 dbm max (with gain control)
+2 dbm nominal to +24 dbm max (using gain control and input attenuator network)

INPUT IMPEDANCE

Matching (transformer no. 2001); greater than 6 times source impedance (unloaded input)

Bridging (transformer no. 2002); with 600-ohm terminated source, bridging impedance greater than 50,000 ohms (30 cps to 20 kc); with 150-ohm terminated source, bridging impedance greater than 12,500 ohms (30 cps to 20 kc)

SOURCE IMPEDANCE

Matching, 150 or 600 ohms, balanced or unbalanced

Bridging, 150 or 600 ohms terminated with characteristic impedance, balanced or unbalanced

LOAD IMPEDANCE

4, 8, 16, 150, or 600 ohm (70 v line) balanced

DAMPING FACTOR

6:1

POWER REQUIREMENTS

105 to 125 v ac/210 to 230 v ac, 50/60 cps, 30 va with local gain control or 33 va with remote gain control

AMBIENT TEMPERATURE

55 °C max

SHIPPING WEIGHT

15 lb

---

## ORDERING INFORMATION

Monitor Amplifier AM408 with Matching Input Transformer MRI 2001

OR

Monitor Amplifier AM408 with Bridging Input Transformer MRI 2002

ACCESSORIES (not supplied)

1. SA10007 Mounting Frame
2. AM408-1 Remote Gain Control Kit
3. SA10007-1 Blank Panel

*McCurdy Radio Industries reserves the right, without notice, to make such changes in equipment, design, specifications, or components as progress in engineering or manufacturing techniques may warrant to improve the performance of the product.*

# DA501 DA502 AMPLIFIER DISTRIBUTION SYSTEMS

- Choice of six systems to suit any distribution requirement.
- Four or eight fully-isolated outputs, as required, from each input.
- Proven AT242A amplifiers maintain program quality with wide frequency response and low distortion.
- Completely prewired and pretested as a package, including 19-inch rack frames.

## DESCRIPTION

The DA501 and DA502 Distribution Amplifier Systems provide extra program quality audio outputs wherever needed, such as network, satellite studio, lobby, or any area requiring a balanced +18 dbm feed. These systems stress versatility, dependability, and compatibility with existing broadcast systems, plus compactness and simplicity in achievement of desired functions.

The heart of both the DA501 and the DA502 is the McCurdy AT242A Universal Audio Amplifier. This is the same high-performance amplifier which has proved so successful in the program circuits of McCurdy audio mixing consoles. Each AT242A is capable of providing up to eight output splits at +18 dbm with 22 db gain in reserve. (See Block Diagram.)

The lowest input level that may be bridged is -4 dbm, with a dual 300-ohm potentiometer adjusting the input level to the amplifier. However, if it is desired to use the distribution system in the matching mode, a level as low as -34 dbm can be accommodated. In this case, the gain control acts as the input load; the amplifier does not load the line appreciably, because of its high input impedance.

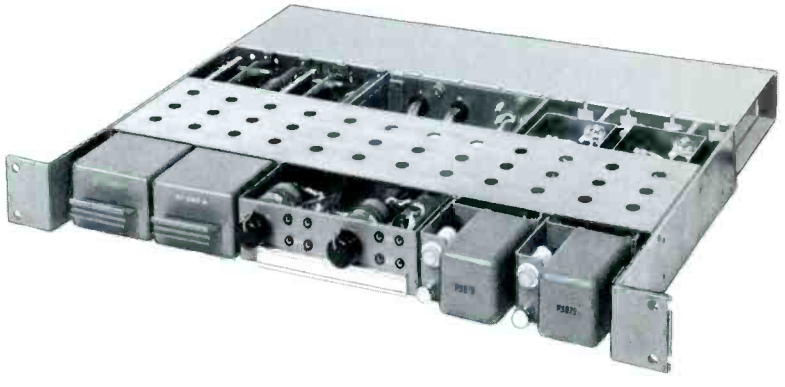

DA501 Distribution Amplifier System

The output splits are provided by SA602 Networks, each of which provides four isolated outputs. These networks mount in the accessory tray at the rear of the amplifier frame. In cases where one SA602 per amplifier is ordered initially, a second SA602 can be paralleled with the first to provide eight outputs from a particular amplifier.

The mounting frame is included as part of both systems, and fits a standard 19-inch wide EIA rack.

McCURDY RADIO INDUSTRIES LIMITED
108 CARNFORTH ROAD — TORONTO 16 — CANADA
(416) 751-6262
TELEX 02-21660

McCURDY RADIO INDUSTRIES INCORPORATED
1051 CLINTON STREET — BUFFALO — N.Y. 14206
(716) 854-6700

The basic differences between the DA501 and the DA502 are:

(a) The DA501 accommodates one or two AT242A amplifiers, with one power supply per amplifier.

(b) The DA502 accommodates up to six amplifiers, and requires an external PS874A to provide power.

## DA501 DISTRIBUTION AMPLIFIER SYSTEM

The DA501 consists of a 1-3/4 inch high frame which accommodates up to two AT242A amplifiers and PS879 power supplies. Bridging level controls are mounted on a central panel along with IN and OUT audio test points. The various configurations of the DA501 are given in the following table, designated by a 'D' series number:

| | |
|---|---|
| D1<br><br>4<br>out<br>(1 x 4) | The simplest package --- one amplifier, one power supply, four outputs. One input bridged by 20K, 22 db gain, four outputs each at +18 dbm, 600 ohms balanced.<br><br>Consists of:<br>1 - DA501 frame<br>1 - AT242A amplifier<br>1 - PS879 power supply |
| D2<br><br>8<br>out<br>(1 x 8) | Eight outputs from a single amplifier and power supply. Same gain and impedance as D1.<br><br>Consists of:<br>1 - DA501-1 frame<br>1 - AT242A amplifier<br>1 - PS879 power supply |
| D3<br><br>8<br>out<br>(2 x 4) | A dual amplifier system, each amplifier with four outputs each at +18 dbm, 600 ohms, 22 db gain, 20K input impedance. Two power supplies.<br><br>Consists of:<br>1 - DA501 frame<br>2 - AT242A amplifiers<br>2 - PS879 power supplies |
| D4<br><br>16<br>out<br>(2 x 8) | Eight outputs each from two amplifiers, all at +18 dbm, 600 ohms, same gain and impedance as D3.<br><br>Consists of:<br>1 - DA501-1 frame<br>2 - AT242A amplifiers<br>2 - PS879 power supplies |

## DA502 DISTRIBUTION AMPLIFIER SYSTEM

The DA502 consists of a 3-1/2 inch frame which accommodates up to six AT242A amplifiers, along with individual bridging level controls and IN/OUT audio test points. The DA502 requires an external PS874A power supply or equivalent 44-volt, dc, regulated source. The DA502 provides four or eight output splits per amplifier, as noted in the table below:

| | |
|---|---|
| D5<br><br>24<br>out<br>(6 x 4) | Four outputs each from six amplifiers, all at +18 dbm, 600 ohms balanced, for a total of 24. 22 db gain, 20K input impedance.<br><br>Consists of:<br>1 - DA502 frame<br>6 - AT242A amplifiers |
| D6<br><br>48<br>out<br>(6 x 8) | Eight outputs each from six amplifiers, levels and impedances same as D5.<br><br>Consists of:<br>1 - DA502-1 frame<br>6 - AT242A amplifiers. |

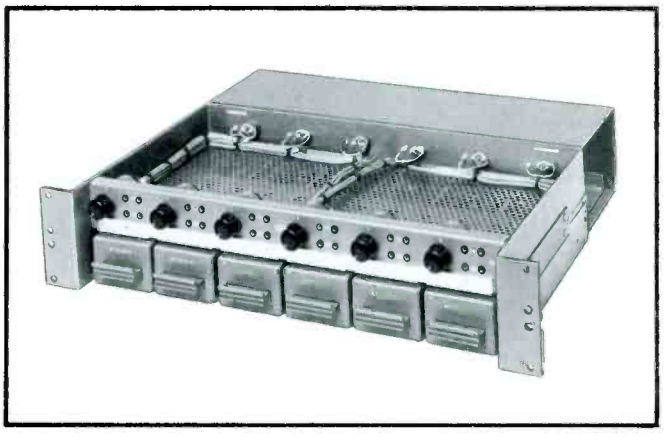

DA502 Distribution Amplifier System

# SPECIFICATIONS

## FREQUENCY RESPONSE

30 hz to 20 khz ± 0.5 db (ref 1 khz).

## INPUT LEVELS

(1) In bridging mode, +18 dbm nominal, -4 dbm minimum.

(2) In matching mode, -34 dbm nominal, -14 dbm maximum.

## OUTPUTS

Up to eight outputs per amplifier at +18 dbm, 600 ohms, balanced.

## ISOLATION BETWEEN OUTPUTS

(1) An open circuit or short circuit on any adjacent output of the same amplifier will not affect the level of any other output by more than 0.25 db.

(2) A signal fed into output #1 will appear on output #2 at least 32 db below the impressed level.

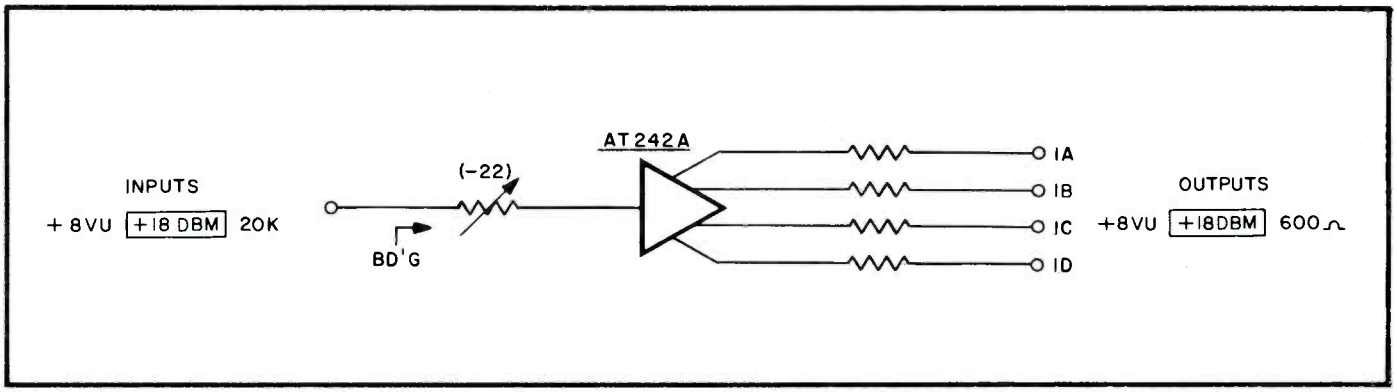


Block Diagram of Distribution Systems

SIGNAL-TO-NOISE RATIO

70 db below +18 dbm.

DISTORTION

Less than 0.5% at +18 dbm output, 30 hz to 20 khz.

CROSSTALK

Does not degrade S/N Ratio to less than 55 db, when measuring one amplifier and operating the remaining at +18 dbm output, in phase, for any frequency from 30 hz to 15 khz.

POWER REQUIREMENTS

(1) DA501: 117v ac, 60 hz, 6 va per amplifier/power supply.

(2) DA502: 44 v to 48v dc at 120 ma for each amplifier, from PS874A or equivalent.

DIMENSIONS

(1) DA501: 1.75 in. (4.45 cm) high, 14.75 in. (37.46 cm) deep, 19 in. (48.26 cm) wide.

(2) DA502: 3.5 in. (8.9 cm) high, 14.75 in. (37.46 cm) deep, 19 in. (48.26 cm) wide.

WEIGHT (less amplifiers)

(1) DA501: 9 lb (4.1 kg).

(2) DA502: 16 lb (7.25 kg).

## ORDERING INFORMATION

ORDER

Specify D1, D2, D3, D4, D5 or D6 package. See Tables preceding Specifications.

OPTIONAL ACCESSORIES

(1) PS874A Regulated Power Supply (for D5 or D6).
(2) SA10007 Mounting Frame for PS874A.

# EQ155A

## variable equalizer

McCurdy

HF CUT SWITCHABLE IN 5 STEPS OF 3 DB AT 10 KHZ

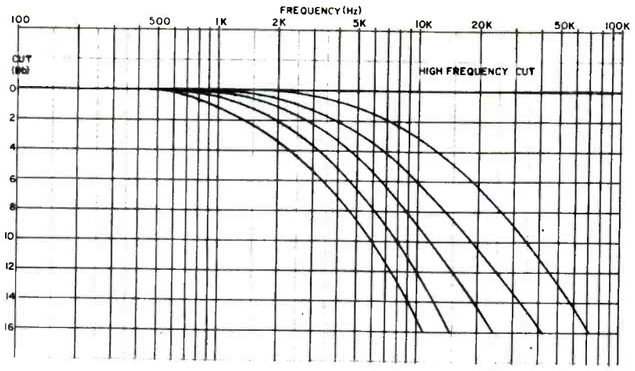


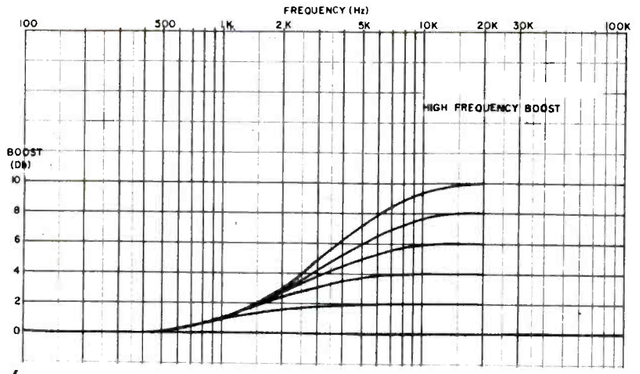


HF BOOST 5 STEPS OF 2 DB AT 15 KHZ

LF CUT SWITCHABLE IN 5 STEPS OF 3 DB AT 100 HZ

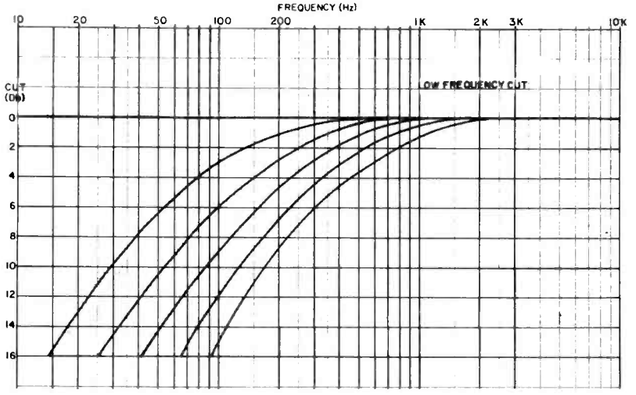


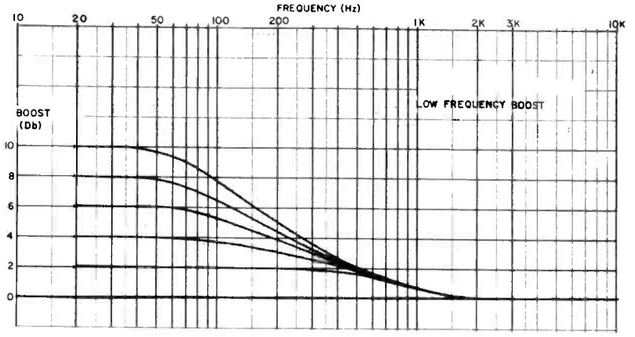


LF BOOST 5 STEPS OF 2 DB AT 40 HZ

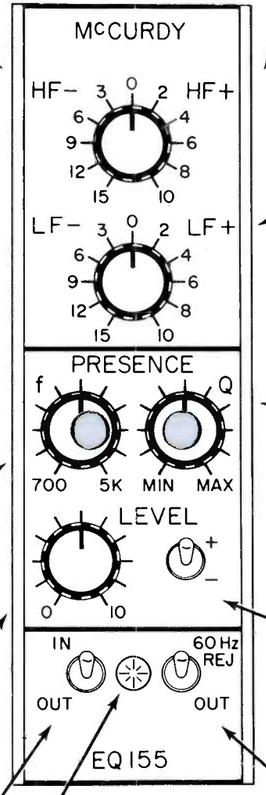


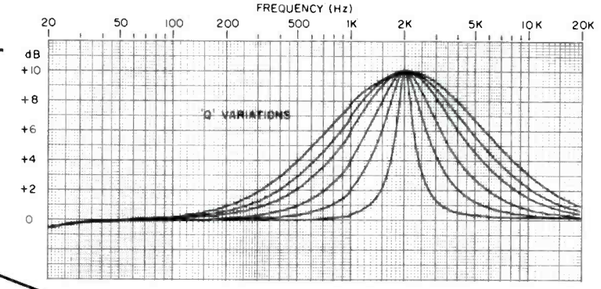


VARIABLE PRESENCE "Q" AT ANY SETTING OF FREQUENCY OR LEVEL - INFINITELY VARIABLE IN BOTH POSITIVE AND NEGATIVE MODE

VARIABLE FREQUENCY CONTROL, ALLOWING PEAKING OF ANY FREQUENCY BETWEEN 700 HZ AND 5 KHZ

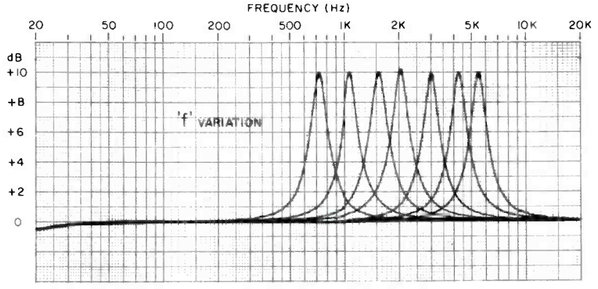


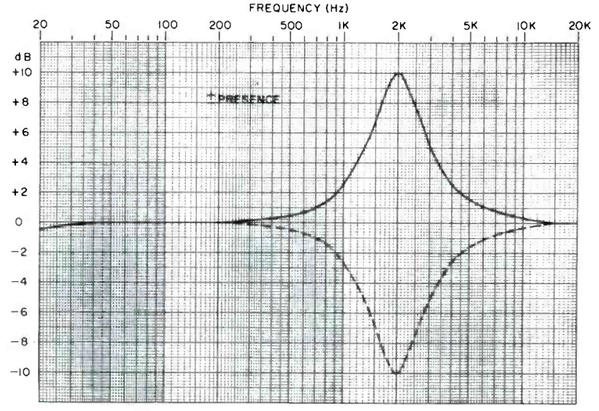


± PRESENCE ALLOWING ADDITION OR SUBTRACTION OF PRESENCE FROM FREQUENCY BAND AVAILABLE AT ANY FREQUENCY OR "Q" SETTING

LEVEL CONTROL. ALLOWS UP TO 10 DB OF PRESENCE TO BE ADDED TO MAIN SIGNAL

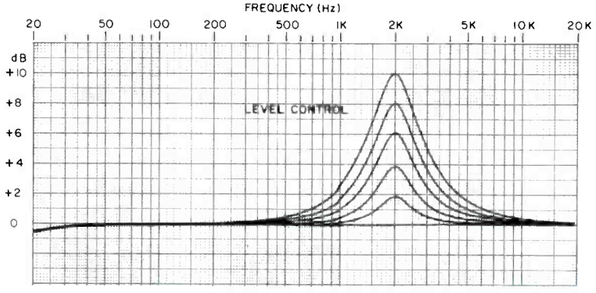


IN/OUT SWITCH

ON/OFF LIGHT

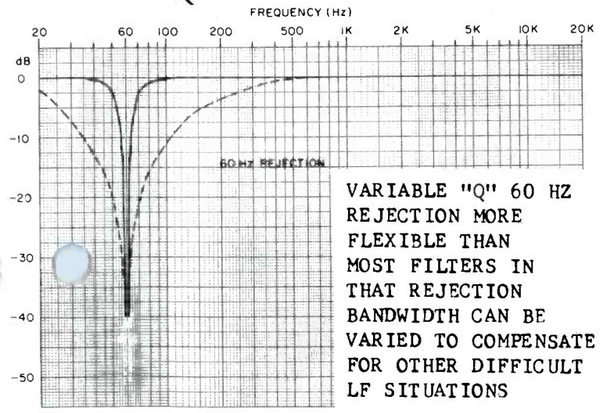


VARIABLE "Q" 60 HZ REJECTION MORE FLEXIBLE THAN MOST FILTERS IN THAT REJECTION BANDWIDTH CAN BE VARIED TO COMPENSATE FOR OTHER DIFFICULT LF SITUATIONS

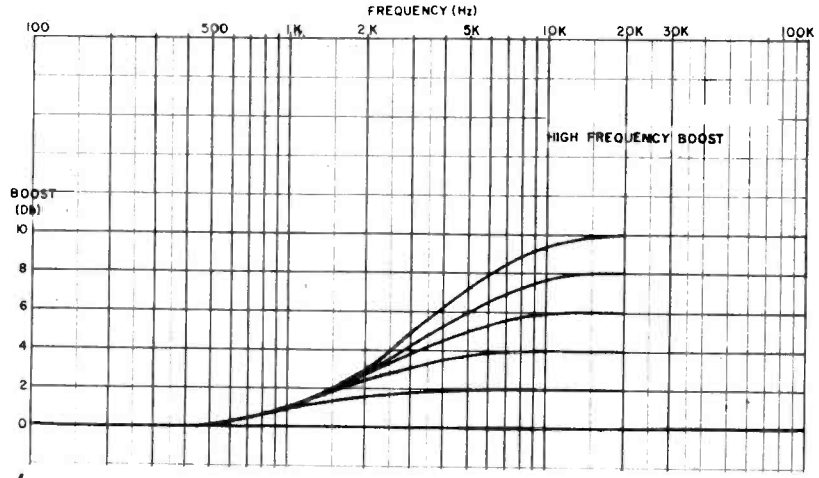


HF BOOST 5 STEPS OF 2 DB AT 15 KHZ

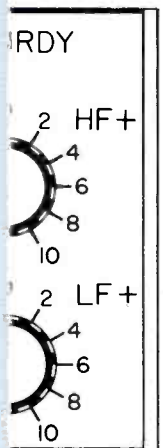


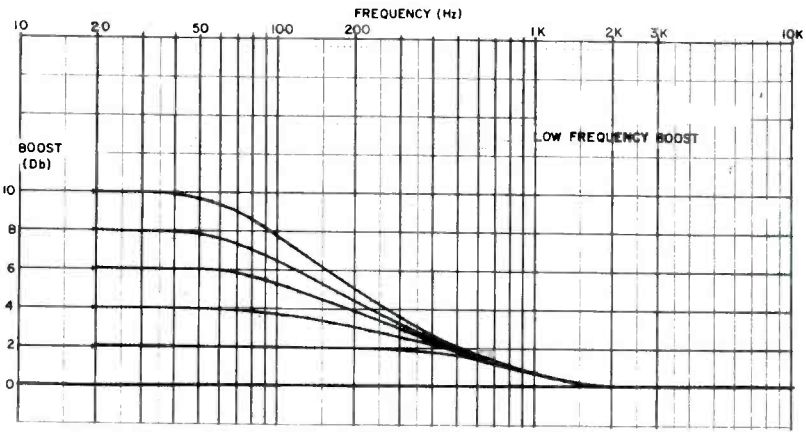


LF BOOST 5 STEPS OF 2 DB AT 40 HZ

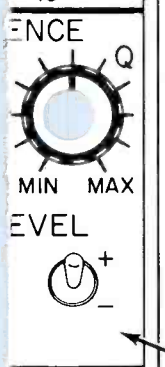


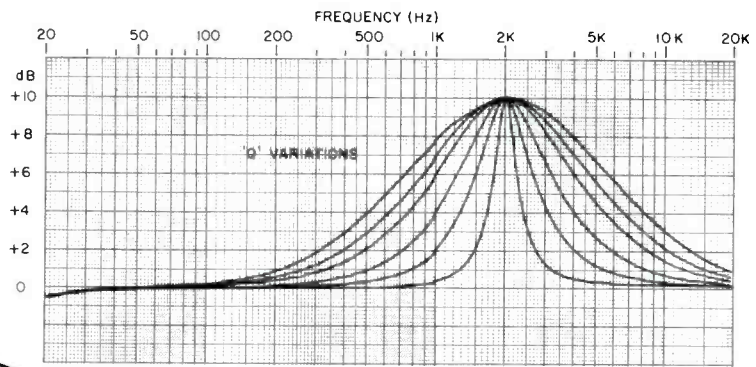


VARIABLE PRESENCE "Q" AT ANY SETTING OF FREQUENCY OR LEVEL - INFINITELY VARIABLE IN BOTH POSITIVE AND NEGATIVE MODE

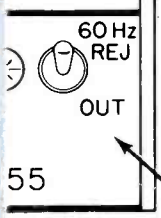


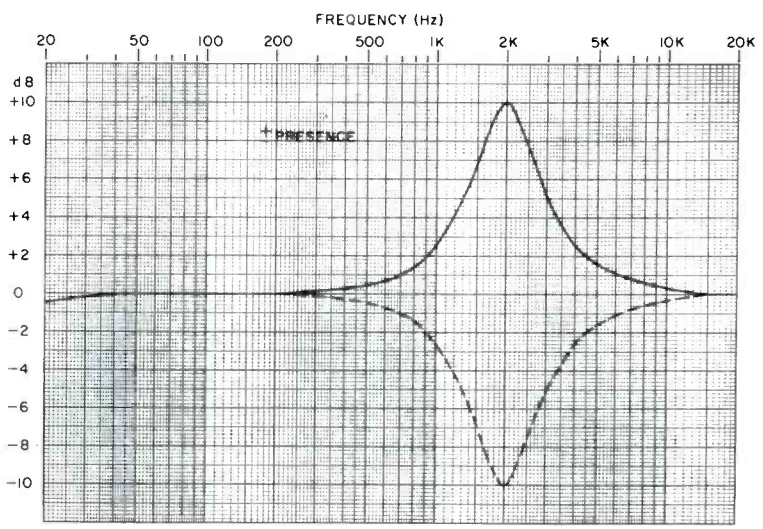


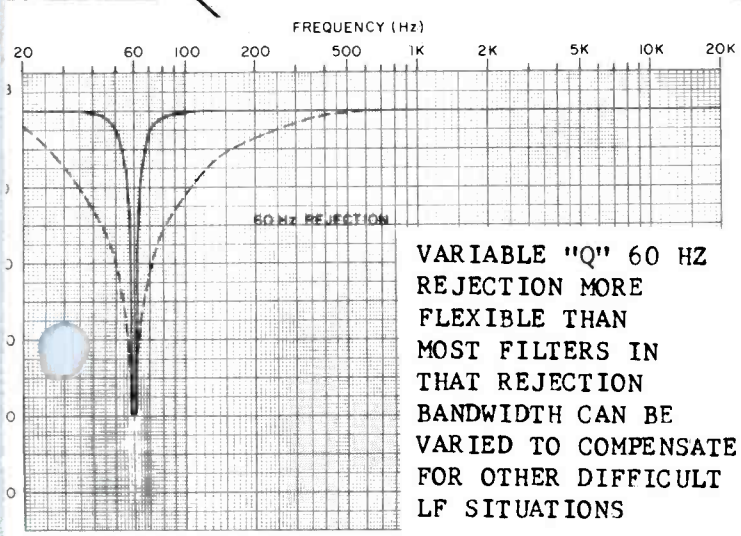


VARIABLE "Q" 60 HZ REJECTION MORE FLEXIBLE THAN MOST FILTERS IN THAT REJECTION BANDWIDTH CAN BE VARIED TO COMPENSATE FOR OTHER DIFFICULT LF SITUATIONS

± PRESENCE ALLOWING ADDITION OR SUBTRACTION OF PRESENCE FROM FREQUENCY BAND AVAILABLE AT ANY FREQUENCY OR "Q" SETTING

# description & specifications

An Equalizer designed for operational ease with many new features in one package.

Styling and size compatibe with standard fader dimensions.

+18 dBm output capability for maximum use of console headroom.

Unique variable "Q" presence equalization, with continuously variable level, "Q", and frequency controls.

Built-in positive/negative presence equalization.

Variable "Q" 60 Hz rejection.

Balanced inputs and outputs.

All curves algebraically add or subtract depending on settings.

The EQ155 Variable Equalizer offers a range of equalization facilities previously requiring two or more equalizers. Thus, with the EQ155 even the smallest installation can now employ full audio program equalization of the highest quality.

The equalizing capabilities of the EQ155 are illustrated graphically in the enclosed Functional Diagram. An IN-OUT switch permits prior setup of the controls before insertion in the program circuit, or instant bypass when equalizing is not required. A pilot lamp indicates when the EQ155 is inserted.

Advanced integrated-circuitry design techniques permit packaging the EQ155 in a case measuring only 1-9/16 by 5-1/4 by 6-1/8 inches. The shape and dimensions are compatible with modern in-line attenuator design, making the EQ155 ideal for incorporation in new consoles as well as in existing facilities.

The EQ155 is installed in a panel cutout by means of two screws. Electrical connections are made via an edge-connector which facilitates removal and installation of the equalizer when required.

**Gain:** Unity ± 1 dB.
**Input Level:** -20 dBm nom, +18 dBm max.
**Input Impedance:** 10k ohms bridging, balanced. Provision for 600-ohm matching input with use of internal resistor.
**Output Level:** -20 dBm nom, +20 dBm max.
**Load Impedance:** 600 ohms, balanced, bridging or matching.
**Output Impedance:** Less than 50 ohms.

**Distortion:** Less than 0.5%, 30 Hz to 20 kHz, at any output level up to +20 dBm.
**Noise:** (all controls flat), 10 Hz to 100 kHz bandwidth. Better than -115 dBm absolute.
**Power Requirement:** 42v to 48v dc, 50 ma.
**Ambient Temperature:** 0° to 55°C.
**Overall Dimensions:** 1-9/16 in. wide, 5-1/4 in. high, 6-1/8 in. deep.
**Weight:** 1-1/2 lb approx.
**Frequency Response:** Controls set for flat response (no equalization): ± 0.5 dB 30 Hz to 20 kHz, ref 1 kHz.

# ordering information

ORDER

EQ155 Universal Equalizer which includes 15-pin edge connector for external wiring.

Printed in Canada

**McCURDY RADIO INDUSTRIES LIMITED**
108 CARNFORTH ROAD, TORONTO, ONTARIO M4A 2L4 (416) 751-6262, TELEX: 06-963533

**McCURDY RADIO INDUSTRIES INCORPORATED**
1051 CLINTON STREET, BUFFALO, N.Y. 14206 (716) 854-6700, TWX 610-492-3219

EAST COAST OFFICE: SADDLE RIVER, N.J. P.O. BOX 86, ZIP 07458, PHONE (201) 327-0750, TWX 610-492-3219

McCurdy Radio Industries reserves the right, without notice to make such changes in equipment, design, specifications, or components as progress in engineering or manufacturing techniques may warrant to improve the performance of the product.

# EQ150 EQ151 EQ152 SOLID-STATE VARIABLE EQUALIZERS

- Three complementary equalizer modules for professional use.
- Only 1-1/2 inches wide - permits front panel mounting in line with standard straight-line attenuator.
- Variable equalization in precise steps - low frequency, high frequency, presence, and mid-low frequency compensation in one package.
- No insertion loss - silicon transistor circuitry actively compensates for network losses.
- IN-OUT insertion switch enables equalizer to be preset for desired effect. Self-contained relay may be operated by external dc control for remote insertion.
- Individual equalizing characteristics are additive or subtractive to produce a wide combination of effects.
- Transient-free switching during program transmission.
- 150/600-ohm source and load impedances, balanced or unbalanced.
- Equalizer module is plug-in.

## DESCRIPTION

The EQ150, EQ151, and EQ152 family of equalizers introduce a new concept in subjective equalization for professional audio use.

The EQ150 and EQ151 provide multi-frequency equalization with unity gain and 45 db of gain, respectively. Operationally, the units are identical. Equalization may be varied at the important frequencies of 40 hz, 100 hz, 3 khz, 6 khz, 10 khz, and 15 khz. Low frequency

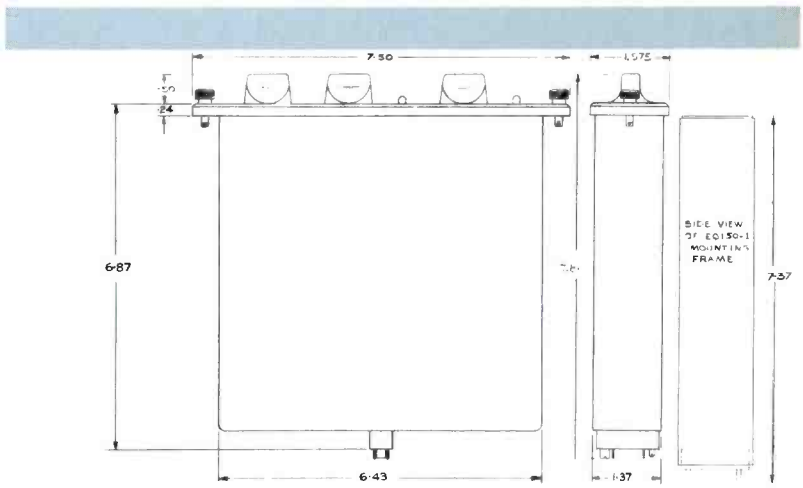


McCURDY RADIO INDUSTRIES LIMITED
108 CARNFORTH ROAD — TORONTO 16 — CANADA
(416) 751-6262

McCURDY RADIO INDUSTRIES INCORPORATED
57 N. PUTNAM ST. — DANVERS — MASS. — 01923
(617) 774-6411

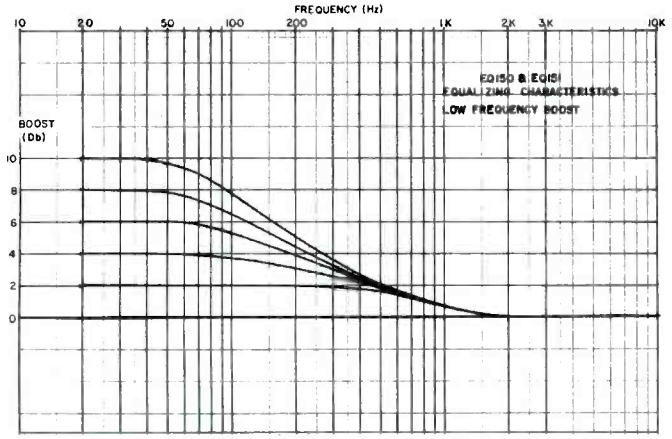
FREQUENCY (Hz)
10 20 50 100 200 1K 2K 3K 10K
BOOST (Db)
10 8 6 4 2 0
EQ150 & EQ151
EQUALIZING CHARACTERISTICS
LOW FREQUENCY BOOST

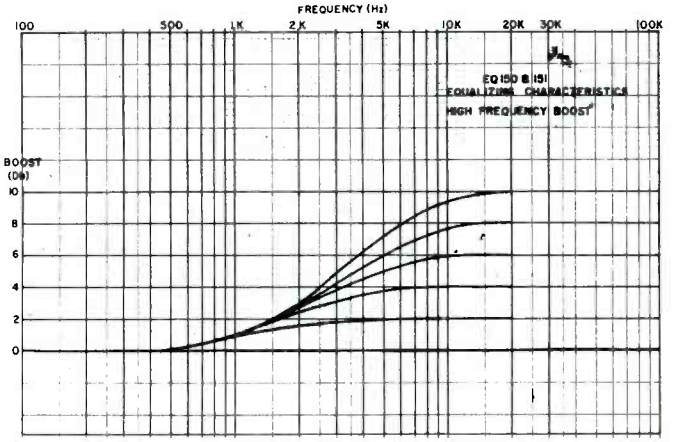
FREQUENCY (Hz)
100 500 1K 2K 5K 10K 20K 30K 100K
BOOST (Db)
10 8 6 4 2 0
EQ150 & 151
EQUALIZING CHARACTERISTICS
HIGH FREQUENCY BOOST

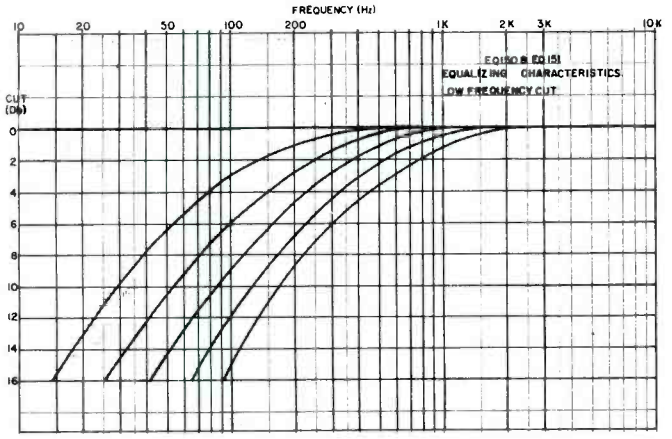
FREQUENCY (Hz)
10 20 50 100 200 1K 2K 3K 10K
CUT (Db)
0 2 4 6 8 10 12 14 16
EQ150 & EQ151
EQUALIZING CHARACTERISTICS
LOW FREQUENCY CUT

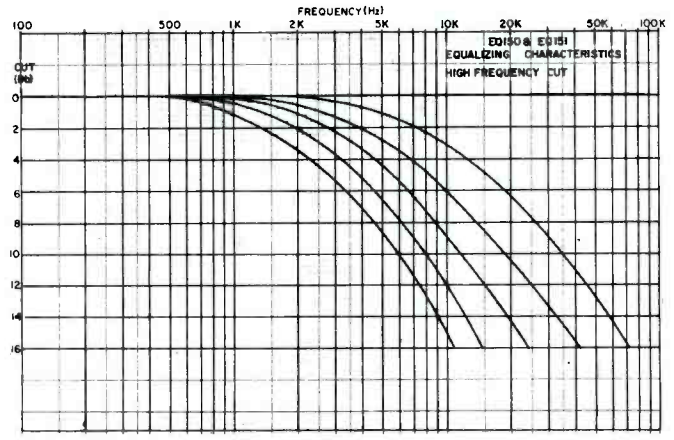
FREQUENCY (Hz)
100 500 1K 2K 5K 10K 20K 50K 100K
CUT (Db)
0 2 4 6 8 10 12 14 16
EQ150 & EQ151
EQUALIZING CHARACTERISTICS
HIGH FREQUENCY CUT

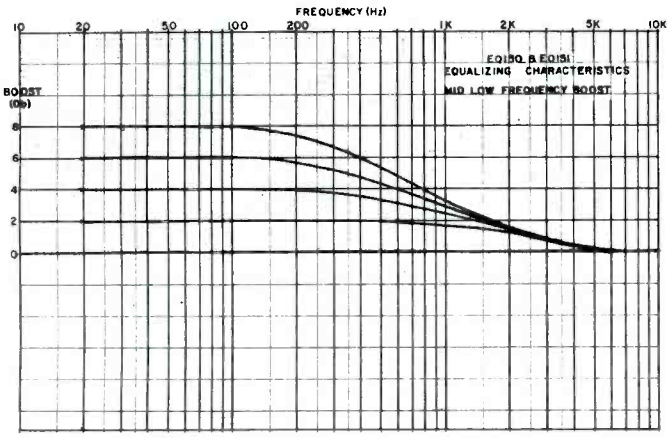
FREQUENCY (Hz)
10 20 50 100 200 1K 2K 5K 10K
BOOST (Db)
8 6 4 2 0
EQ150 & EQ151
EQUALIZING CHARACTERISTICS
MID LOW FREQUENCY BOOST

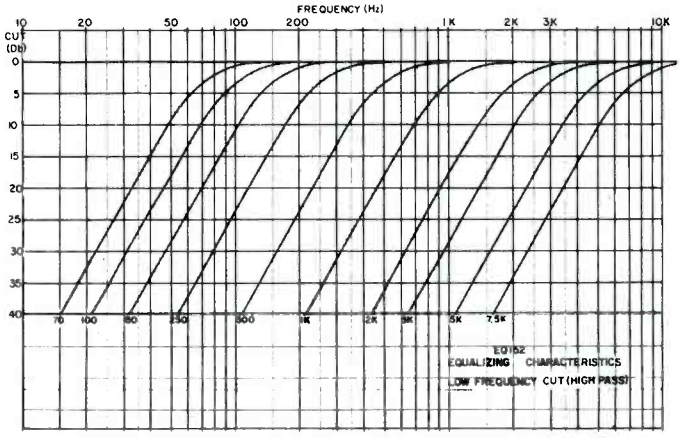
FREQUENCY (Hz)
10 20 50 100 200 1K 2K 3K 10K
CUT (Db)
0 5 10 15 20 25 30 35 40
70 100 150 250 500 1K 2K 3K 5K 7.5K
EQ152
EQUALIZING CHARACTERISTICS
LOW FREQUENCY CUT (HIGH PASS)

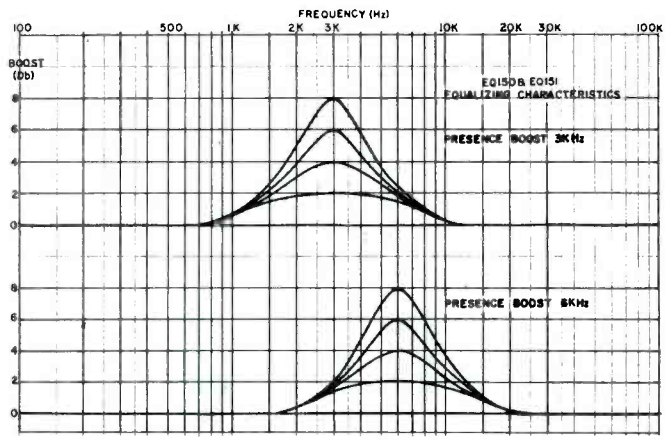
FREQUENCY (Hz)
100 500 1K 2K 3K 10K 20K 30K 100K
BOOST (Db)
8 6 4 2 0
EQ150 & EQ151
EQUALIZING CHARACTERISTICS
PRESENCE BOOST 3KHz
PRESENCE BOOST 6KHz

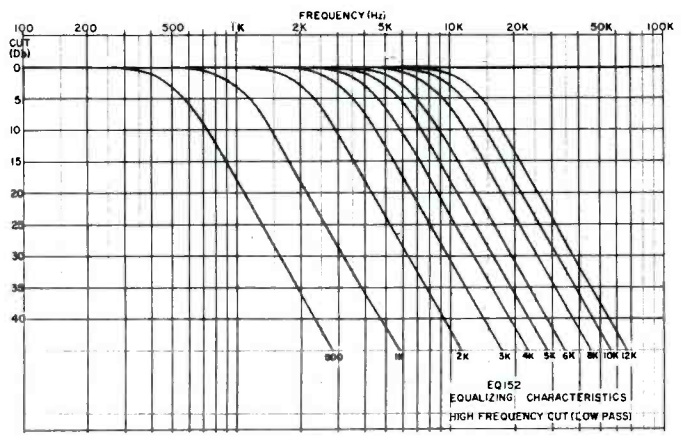
FREQUENCY (Hz)
100 200 500 1K 2K 5K 10K 20K 50K 100K
CUT (Db)
0 5 10 15 20 25 30 35 40
800 1K 2K 3K 4K 5K 6K 8K 10K 12K
EQ152
EQUALIZING CHARACTERISTICS
HIGH FREQUENCY CUT (LOW PASS)

boost occurs at 40 hz and low frequency cut at 100 hz. The high frequency boost occurs at 15 khz and the high frequency cut at 10 khz. A selectable presence control establishes a resonant peak to emphasize the program transmission at 3 khz or 6 khz. Alternatively, the presence effect can be substituted with a low frequency platform boost below 100 hz. The amplitude of the selected frequencies is adjustable in 2 db increments for boost and 3 db increments for cut.

The EQ152 incorporates active, variable, high-pass and low-pass filters in one compact unit. A mode switch permits the high- and low-pass filters to work at two sensitivity ranges individually or in tandem. The equalizer has unity gain. Ten cutoff frequency positions are available in each LF and HF mode; the cutoff rate is 18 db per octave. The LF control selects cutoff at 70 hz, 100 hz, 150 hz, 250 hz, 500 hz, 1 khz, 2 khz, 3 khz, 5 khz, and 7.5 khz. The HF control selects cutoff at 500 hz, 1 khz, 2 khz, 3 khz, 4 khz, 5 khz, 6 khz, 8 khz, 10 khz, and 12 khz.

The EQ150, EQ151, and EQ152 are compact plug-in modules designed for front panel mounting with conventional straight-line mixing attenuators. The equalizer modules fully meet the need for comprehensive, variable equalization through the audio spectrum in sound mixing and broadcast facilities. Each module contains the amplifiers and transformers necessary to operate balanced or unbalanced and with gain or at unity gain.

Each equalizing characteristic is achieved by using an individual active circuit which permits additive or subtractive equalization, resulting in a wide range of compounded characteristics.

Advanced solid-state circuitry using silicon transistors and field-effect devices enable the units to perform with optimum signal-to-noise and inherent low distortion within a system.

Premium quality gold switches permit transient-free equalizing adjustments to be made during program transmission. An IN-OUT insertion switch provides instant operation from a preset condition. The EQ150 and EQ152 incorporate hermetically-sealed relays for remotely controlled insertion of a preset effect.

Blank Module

The EQ150-2 Blank Module is used when it is necessary to remove an equalizer, yet maintain the signal path. This is extremely useful when it is desired to preset an equalizer in different mixer channels. To accomplish this, it is necessary only to transfer the equalizer from one EQ150-1 mounting frame to the other, and insert the EQ150-2 into the empty mounting frame.

## SPECIFICATIONS

| Item | EQ150 | EQ151 | EQ152 |
|---|---|---|---|
| Equalizing Characteristics: | | | |
| (1) Low Frequency Boost | 2 db per step in 5 steps at 40 hz. | 2 db per step in 5 steps at 40 hz. | |
| (2) Low Frequency Cut | 3 db per step in 5 steps at 100 hz. | 3 db per step in 5 steps at 100 hz. | Low Frequency Cut (High Pass) in hz, at -3 db points; Off, 70, 100, 150, 250, 500, 1000, 2000, 3000, 5000, and 7500. |
| (3) Mid-Low Frequency Boost | 2 db per step in 4 steps; platform below 100 hz. | 2 db per step in 4 steps; platform below 100 hz. | |
| (4) Presence Boost | 2 db per step in 4 steps; resonant peak selectable at 3 or 6 khz. | 2 db per step in 4 steps; resonant peak selectable at 3 or 6 khz. | |
| (5) High Frequency Boost | 2 db per step in 5 steps at 15 khz. | 2 db per step in 5 steps at 15 khz. | |
| (6) High Frequency Cut | 3 db per step in 5 steps at 10 khz. | 3 db per step in 5 steps at 10 khz. | High Frequency Cut (Low Pass) in hz, at -3 db points; 500, 1000, 2000, 3000, 4000, 5000, 6000, 8000, 10000, 12000, Off. |
| (7) Rate of Attenuation | 6 db per octave. | 6 db per octave. | 18 db per octave. |
| | Tolerance for above figures: Boost and Cut within ± 0.5 db per step; Frequencies within ± 10%. | | |

(CONT'D OVERLEAF)

| Item | EQ150 | EQ151 | EQ152 |
|---|---|---|---|
| General Characteristics: | | | |
| (1) Gain (± 1 db) | Set to unity. | Set to 45 db. | Set to unity. |
| (2) Frequency Response (effects controls at Zero or Off) | Within ± 0.5 db, 50 hz to 20 khz (ref 1 khz). | Within ± 0.5 db, 50 hz to 20 khz (ref 1 khz). | Within ± 0.5 db, 50 hz to 20 khz (ref 1 khz). |
| (3) Signal-to-Noise Ratio | 90 db below 0 dbm output level. | 75 db below 0 dbm output level. | (a) 75 db below 0 dbm output level, with mode switch in (+) or high sensitivity position.<br><br>(b) 85 db below +20 dbm output level, with mode switch in ( - ) or low sensitivity position. |
| (4) Harmonic Distortion | Less than 0.5% at +10 dbm output, 30 hz to 20 khz. | Less than 0.5% at +10 dbm output, 20 hz to 20 khz. | Less than 0.5% at +20 dbm output, 30 hz to 20 khz. |
| (5) Input Levels | -10 dbm nom, +10 dbm max. | -35 dbm nom, -25 dbm max. | (a)Mode switch in (+) or high sensitivity position; -10 dbm nom, 0 dbm max.<br><br>(b) Mode switch in ( - ) or low sensitivity position; 0 dbm nom, +20 dbm max. |
| (6) Output Levels | -10 dbm nom, +10 dbm max. | +10 dbm nom, +20 dbm max. | -10 dbm nom, +20 dbm max. |
| (7) Source Impedance | 150 or 600 ohms, balanced or unbalanced. | 150 or 600 ohms, balanced or unbalanced. | 150 or 600 ohms, balanced or unbalanced. |
| (8) Input Impedance | 150 or 600 ohms ± 10%, balanced. | 150 or 600 ohms ± 10%, balanced. | 150 or 600 ohms ± 10%, balanced. |
| (9) Load Impedance | 150 or 600 ohms, balanced or unbalanced. | 150 or 600 ohms, balanced or unbalanced. | 150 or 600 ohms, balanced or unbalanced. |
| (10) Output Impedance | 1/3 load impedance. | 1/3 load impedance. | 1/3 load impedance. |
| (11) Remote Insertion | Self-contained relays. | | Self-contained relays. |
| (12) Power Requirements | 36v dc at 70 ma, from PS874 or equivalent. | 36v dc at 70 ma, from PS874 or equivalent. | 36v dc at 135 ma, from PS874 or equivalent. |
| (13) Ambient Temperature | 0°C to 55°C. | 0°C to 55°C. | 0°C to 55°C. |
| (14) Overall Dimensions | 1-1/2 in. wide, 7-1/2 in. deep, 7-1/2 in. long. | 1-1/2 in. wide, 7-1/2 in. deep, 7-1/2 in. long. | 1-1/2 in. wide, 7-1/2 in. deep, 7-1/2 in. long. |
| (15) Finish | Nickel-cadmium case with black anodized front panel. | Nickel-cadmium case with black anodized front panel. | Nickel-cadmium case with black anodized front panel. |
| (16) Weight | 3-1/4 lb. | 3-1/4 lb. | 4-1/4 lb. |

## ORDERING INFORMATION

ORDER: EQ150, EQ151, or EQ152 Equalizer.
OPTIONAL ACCESSORIES: (1) EQ150-1 Mounting Frame; (2) EQ150-2 Blank Module.

*McCurdy Radio Industries reserves the right, without notice, to make such changes in equipment, design, specifications, or components as progress in engineering or manufacturing techniques may warrant to improve the performance of the product.*

# SA 137A
# digital counter

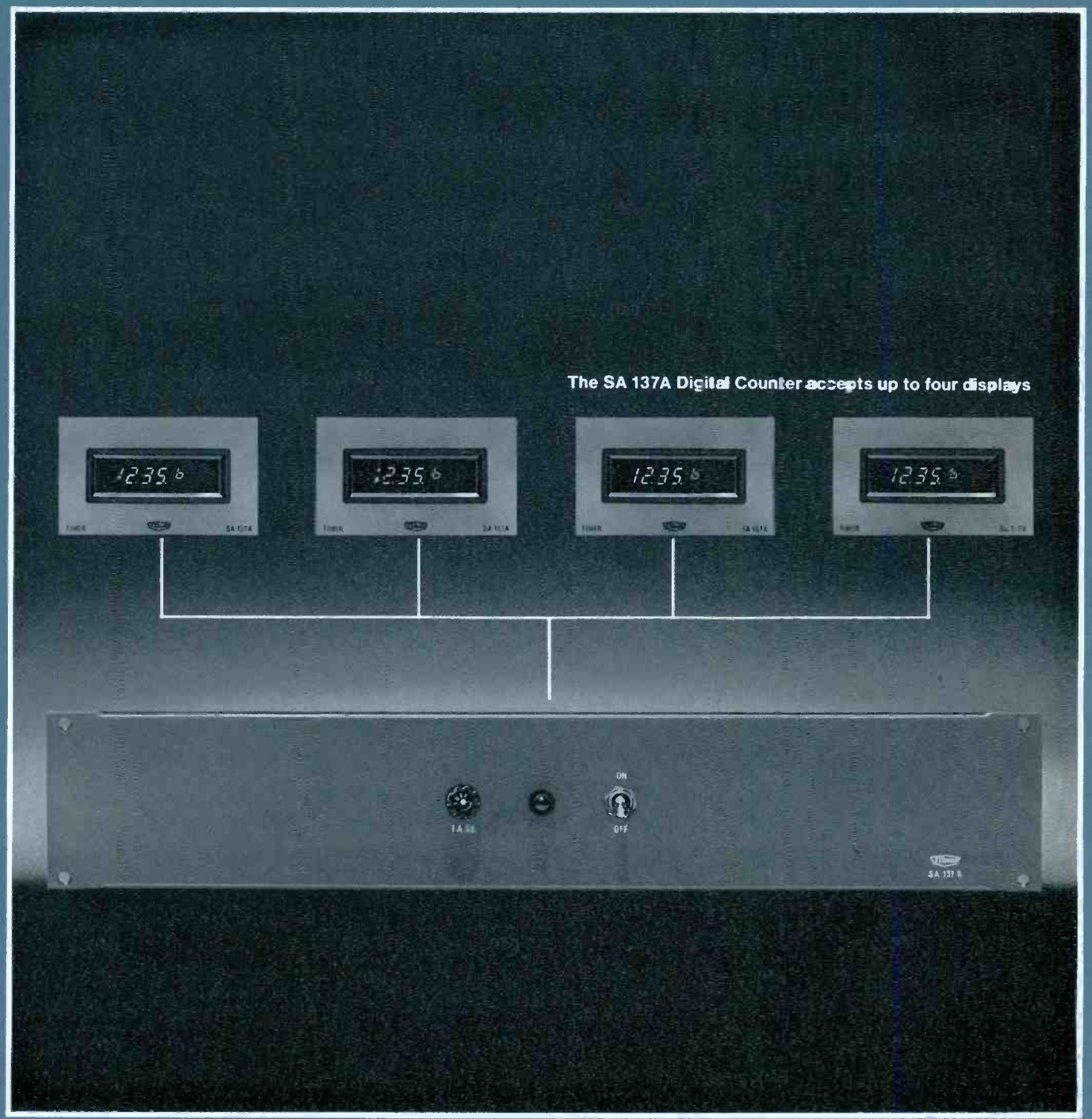
The SA 137A Digital Counter accepts up to four displays



McCURDY

## SA 137A DIGITAL COUNTER

# specifications

1. Compact master unit, only 3½" in height, mounts in standard 19" equipment rack.

a) Maximum power requirement at 117V, 60 Hz is 1A.

b) All cable connections are to the rear of the unit.

c) 60 Hz power line frequency is used as the counter time base.

2. The SA137A Digital Timer accepts a maximum of 4 display units.

a) Each remote may be a maximum of 100' from the master (Cable length).

b) The remotes are connected to the master with 25 conductor ribbon cable. Conventional cable may also be used. (option)

c) The remote may be mounted in the console VU housing, or any other panel. It occupies $2^{15}/_{16}$" x 5" of panel space and $1^{7}/_{16}$" behind the panel. It mounts in a standard VU meter cutout.

d) Each readout is equipped with five digits, tens and units of minutes and seconds and tenths of seconds. For ease of reading, the tenths of seconds only displays even tenths, 2, 4, 6, 8, 0. The maximum elapsed time displayed is 99 minutes 59.8 seconds.

e) The minutes and seconds displays are 0.510" high, red LED types and the tenth seconds display is a 0.300" high, red LED type. A colon is provided between the minutes and seconds digits and a decimal point between the seconds and tenths of seconds.

3. Two standard control panels are available. One mounts in four unit widths of the console remote control tray ($3^{15}/_{16}$ x $4^{5}/_{8}$). The other mounts in a standard 7½", double width ($3^{1}/_{8}$"), attenuator module. Both are designed to be compatible with modular consoles, mounting directly on the console control panel. The controls provided and their functions are as follows:

a) Four thumbwheel switches for setting tens and units of seconds and minutes.

b) Start switch – starts counter.

c) Stop switch – stops counter, display remains at stop time.

d) Hold switch – holds display, counter continues to run. When switch is released the display updates to counter.

e) Clear switch – clears display and resets counter to zero.

f) Load switch – enters time set on thumbwheel switches into counter.

g) Up/Down switch – sets counter operating mode, either counting up or down from a preset time.

4. Remote control connections are available on the master unit for starting and resetting the counter when other equipment, such as tape machines, are started or stopped. This can be used for automatic timing of running time.

5. In the down-count mode, a ground going signal is available momentarily upon reaching zero. The counter remains at zero, flashing the display to indicate duration count is ended.

**Ordering information/model types**

a) Master unit – SA 137A

b) Remote display, VU Meter Mounts – SA 137A-01

c) Remote display, cue speaker mount – SA 137A-02

d) Control panel:
Attenuator module mounting: SA 137A-06
Remote control tray mounting: SA 137A-07

e) Interconnecting cables – SA 137A-C – (Last two digits give cable length in feet, i.e. SA 137A-C00 is a 100 ft. cable and SA 137A-C07 is a 7 ft. cable.)

*McCurdy Radio Industries reserves the right without notice to make such changes in equipment, design, specifications, or components, as progress in engineering or manufacturing techniques may warrant, to improve the performance of the product.*

Printed in Canada · SA 137A Digital Timer/Issue 3/12.76

McCurdy Radio Industries Limited,
108 Carnforth Road, Toronto, Ontario M4A 2L4 (416) 751-6262 Telex: 06-963533

McCurdy Radio Industries Incorporated, TWX: 610-492-3219
1051 Clinton Street, Buffalo, N.Y. 14206 (716) 854-6700 Telex: 06-963533

U.S.A. East Coast Office,
Saddle River, N.J. P.O. Box 86, 07458 (201) 327-0750

# SA141

## reel tape switcher

McCurdy

# description & specifications

## SA 141 REEL TAPE SWITCHER

Compact and self contained. Accepts –20 dBm to +8 dBm 10 K Bridging. 3-Watt monitoring with pre-post mode. Standard EIA Rack Panel 3½ in. x 19 in. Amphenol blue ribbon connectors for inputs and outputs.

A. 20 Source input selector (10 K Bridge)
B. Telco feed select
C. Switcher input select
D. Program gain control
E. Two way output select
F. Monitor gain control
G. Monitor head-set jack
H. Monitor speaker

All inputs and outputs are wired to Amphenol blue ribbon connectors at the rear of the unit.

## MAX. GAIN

±1 dB.
Pgm: 28 dB max.
Mon: 55 dB max.

## FREQUENCY RESPONSE (Ref. 1 kHz)

Pgm: ±0.5 dB, 20 Hz to 20 kHz.
Monitor: ±0.5 dB, 20 Hz to 20 kHz.

## NOISE

Pgm: –85 dB below +18 dBm.
Monitor –75 dB below 3-Watts.

## HARMONIC DISTORTION

Pgm. 0.5%, 20 Hz to 20 kHz at + 14 dBm.
Monitor: 0.5%, 20 Hz to 20 kHz at 3-W, 8 ohms.

## INPUT LEVELS (Nominal)

–20 dBm, Bal/Unbal.

## OUTPUT LEVELS (Nominal)

+4 dBm/+8 dBm, 600 ohms Bal.

## SOURCE IMPEDANCE

600 ohms.

## INPUT IMPEDANCE

10 K ohms.

## POWER REQUIREMENTS

115 V//60 Hz single phase.

## OVERALL DIMENSIONS

19 in. Wide, 3½ in. High, 7 in. Deep.

## WEIGHT

7 lb. approx. (3.18 kg).

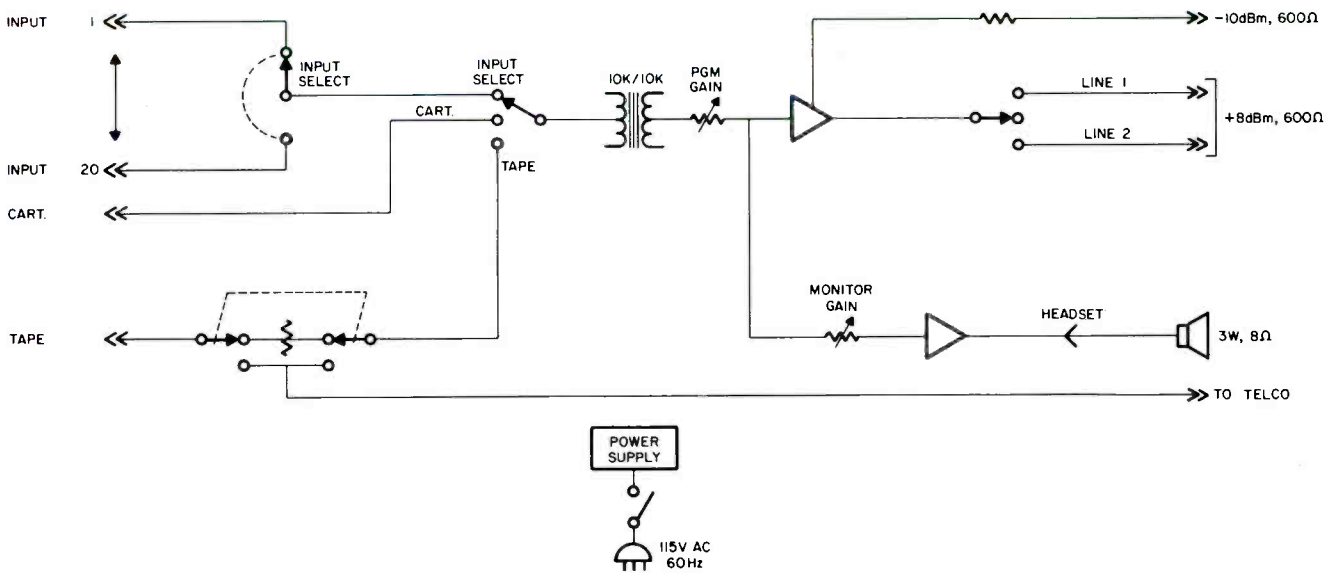


Printed in Canada

**McCURDY RADIO INDUSTRIES LIMITED**
108 CARNFORTH ROAD, TORONTO, ONTARIO M4A 2L4 (416) 751-6262, TELEX: 06-963533

**McCURDY RADIO INDUSTRIES INCORPORATED**
1051 CLINTON STREET, BUFFALO, N.Y. 14206 (716) 854-6700, TWX 610-492-3219

EAST COAST OFFICE: SADDLE RIVER, N.J. P.O. BOX 86, ZIP 07458, PHONE (201) 327-0750, TWX 610-492-3219

McCurdy Radio Industries reserves the right, without notice to make such changes in equipment, design, specifications, or components as progress in engineering or manufacturing techniques may warrant to improve the performance of the product.

DA503

# audio distribution system

McCurdy

# description & specifications

The DA503 Audio Distribution System is designed for audio distribution in broadcasting or other commercial applications where professional quality must be maintained. The DA503 consists of an FR904 19-inch Equipment Frame which holds up to six AT249 Distribution Amplifiers and one PS849 Power Supply.

Each AT249 bridges one input at any specified level from -30 dBm to 0 dBm, and provides six isolated outputs at +8 dBm 600 ohms. Thus, a complete complement of six amplifiers can provide 36 outputs from six inputs.

The wide input dynamic range is made possible by pad selection and preset gain adjustment. A distortion figure of less than 0.5% is maintained over the specified input levels and the frequency band of 30 Hz to 20 kHz.

The FR904 Equipment Frame mounts in a standard 19-inch rack or pedestal and occupies only 3-1/2 inches of vertical space.

**Frequency Response:** 20 Hz to 20 kHz, ±1 dB (ref 1 kHz).

**Input Levels:** -30 or 0 dBm depending on strapping on PC Board and Gain adjustment.

**Max Gain:** 48 dB, ±1 dB. (Gain variable 0 to 48 dB with front panel gain control.)

**Outputs:** Up to six outputs per amplifier at +8 dBm (+18 dBm).

**Source Impedance:** 600 ohms terminated.

**Input Impedance:** Greater than 10,000 ohms.

**Load Impedance:** 600 ohms or higher; balanced.

**Noise:** 75 dB to 85 dB below +18 dBm, depending on gain control setting.

**Distortion:** Less than 0.5% with -20 dBm input and +18 dBm output, 30 Hz to 20 kHz.

**Power Requirement:** 115v ac, 60 Hz, 40 VA for full complement of six amplifiers.

**Dimensions:** 3-1/2 in. high, 13-3/8 in. deep, 19 in. wide.

**Weight:** 22 lb approx.

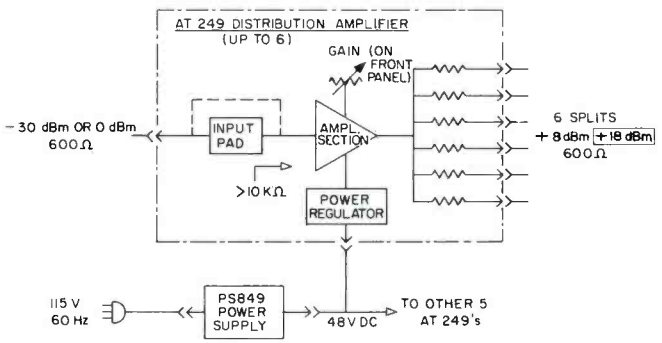


# ordering information

Order DA503 Distribution Amplifier Assembly and specify quantity of AT249 Amplifiers up to a maximum of six.

The standard DA503 includes the PS849 Power Supply and the FR904 Equipment Frame, prewired for the customer to connect inputs and outputs.

Printed in Canada

**McCURDY RADIO INDUSTRIES LIMITED**
108 CARNFORTH ROAD, TORONTO, ONTARIO M4A 2L4 (416) 751-6262, TELEX: 06-963533

**McCURDY RADIO INDUSTRIES INCORPORATED**
1051 CLINTON STREET, BUFFALO, N.Y. 14206 (716) 854-6700, TWX 610-492-3219

EAST COAST OFFICE: SADDLE RIVER, N.J. P.O. BOX 86, ZIP 07458, PHONE (201) 327-0750, TWX 610-492-3219

McCurdy Radio Industries reserves the right, without notice to make such changes in equipment, design, specifications, or components as progress in engineering or manufacturing techniques may warrant to improve the performance of the product.

# SM8
# SM18

# AUDIO SWITCHERS

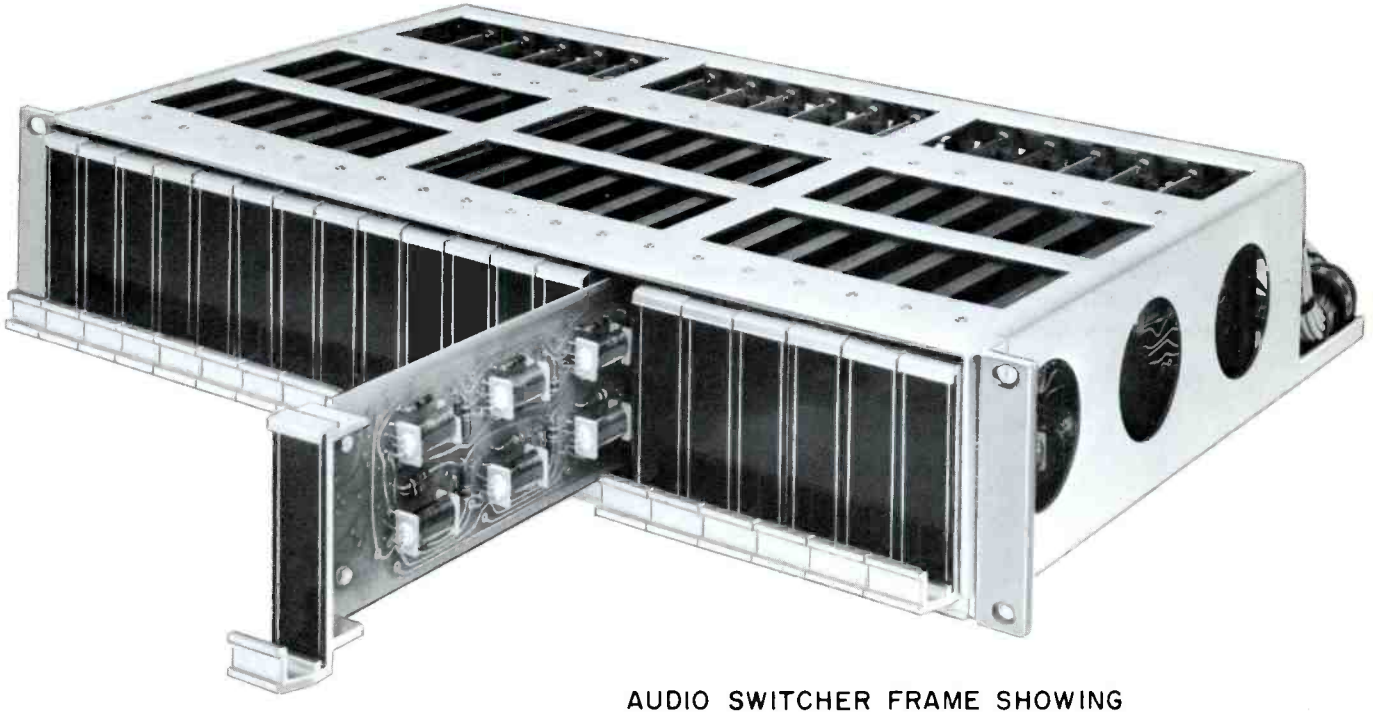

AUDIO SWITCHER FRAME SHOWING
SM 8 REED RELAY MODULE

## DESCRIPTION

The SM8 and SM18 Switching Modules are the basic building-blocks for sophisticated, low-transient, audio switching systems. A full-complement module accommodates eight relays, a silicon-transistor hold-cancel circuit, and resistive isolation pads. The SM8 uses high-reliability reed relays while the SM18 uses armature relays; otherwise, the two modules are identical. The use of silicon diodes in the switching circuits virtually eliminates transients and prevents back-coupling.

The circuitry is ruggedly constructed on a glass-epoxy printed-circuit card which attaches to an aluminum extrusion. A metal backing-plate is used to further increase the rigidity of the module.

The full SM8 or SM18 module is an 8 x 1 switcher and/or mixer, providing one output from any one or all eight inputs, depending on the wiring configuration of the hold-cancel circuit. However, less than the full complement of circuits may be ordered on any module in order to suit the needs of individual system requirements. Conversely, modules may be stacked or paralleled to increase the input-to-output ratio from the basic 8 x 1 system.

A wide variety of control configurations and switch types may be used with these switchers, including momentary or alternate action pushbuttons, or lever keys. A few examples are given in the following paragraphs and accompanying diagrams (see over).

McCURDY RADIO INDUSTRIES LIMITED
108 CARNFORTH ROAD — TORONTO 16 — CANADA
(416) 751-6262
TELEX 02-21660

McCURDY RADIO INDUSTRIES INCORPORATED
1051 CLINTON STREET — BUFFALO — N.Y. 14206
(716) 854-6700

FIGURE 1: Up to eight relays only; an alternate action pushbutton is required to hold the relay in. There is no loss in the matrix crosspoint.

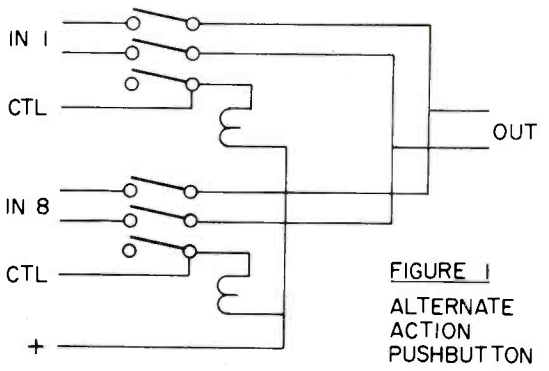


FIGURE 1
ALTERNATE ACTION PUSHBUTTON

FIGURE 2: Same as Figure 1 but with bridging pads, with a loss of 40 dB, inserted in the input lines. High isolation between crosspoints.

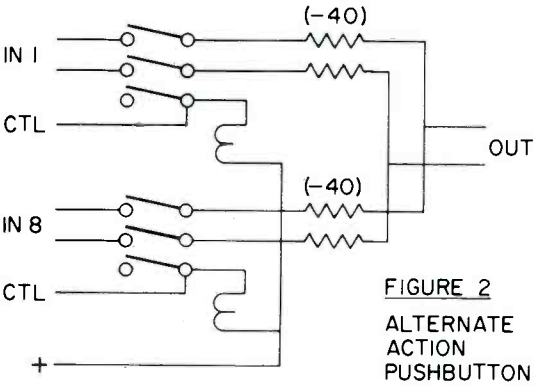


FIGURE 2
ALTERNATE ACTION PUSHBUTTON

FIGURE 3: Up to eight relays with a holding circuit through an extra 'A' contact on each relay. A relay can be operated with a momentary pushbutton and, after depressing this button, the relay will hold in. An external normally-closed pushbutton is required in the negative supply line to cancel the relays. There is no loss in the matrix crosspoint.

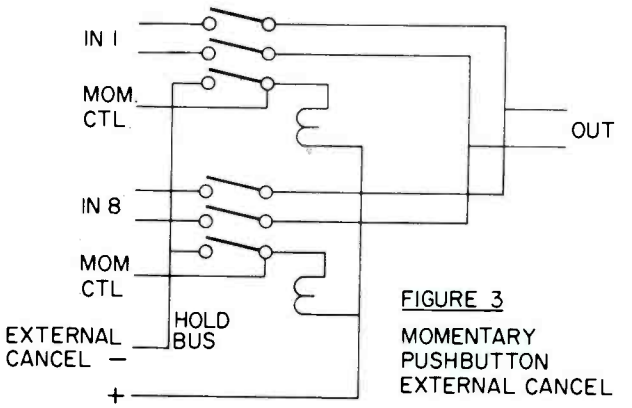


FIGURE 3
MOMENTARY PUSHBUTTON EXTERNAL CANCEL

FIGURE 4: Same as Figure 3 but with bridging pads added in the input circuits. The crosspoint loss is 40 dB. High isolation between crosspoints.

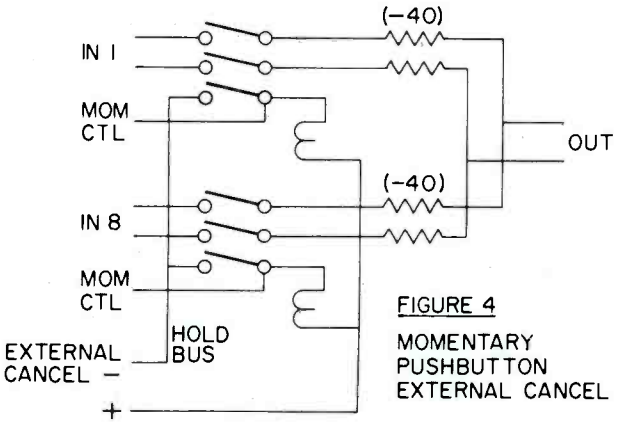


FIGURE 4
MOMENTARY PUSHBUTTON EXTERNAL CANCEL

FIGURE 5: Up to eight relays with a holding circuit through an extra 'A' contact on each relay, and a transistorized hold-cancel circuit. Relays are operated by momentary pushbuttons. The holding circuit is a transistorized switch that changes its state when a negative potential is applied to the external cancel connection; or, by inserting diodes in the proper locations, the relay(s) are cancelled by the next selection.

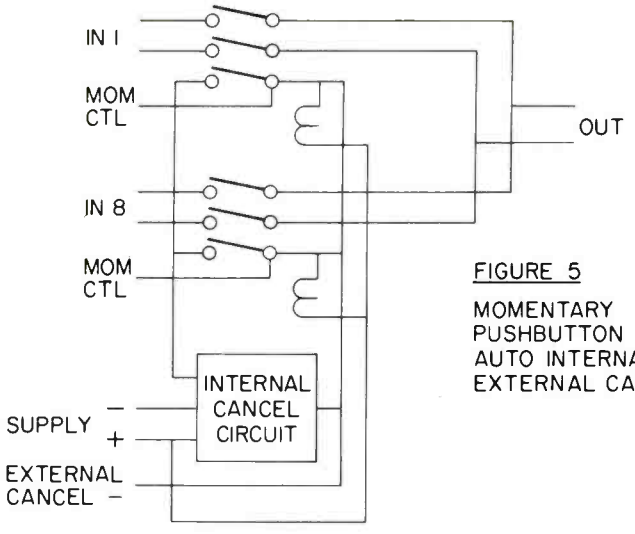


FIGURE 5

MOMENTARY PUSHBUTTON AUTO INTERNAL/ EXTERNAL CANCEL

FIGURE 6: Same as Figure 5 but with bridging pads inserted in the inputs. Insertion loss is 40 dB. High isolation between crosspoints.

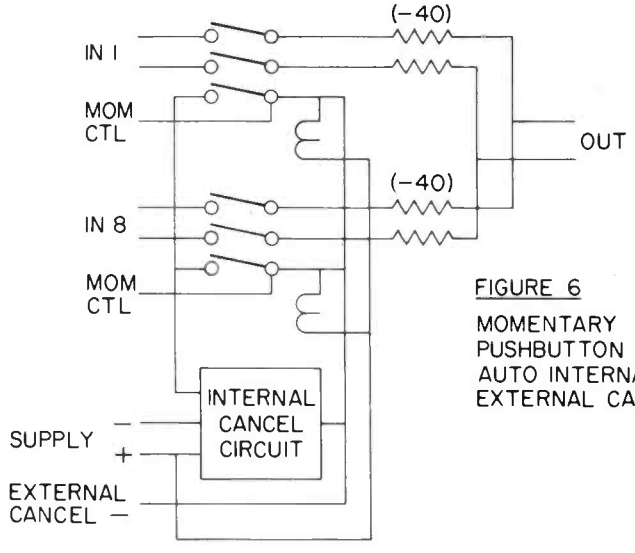


FIGURE 6

MOMENTARY PUSHBUTTON AUTO INTERNAL/ EXTERNAL CANCEL

SM8 Reed Relay Switching Module

SM18 Armature Relay Switching Module

# SPECIFICATIONS

SYSTEM QUANTITIES

Eight relays per module.
Twenty modules per frame.

CARD DIMENSIONS

53/64 in. wide, 3 in. high, 10-13/16 in. long. Frame occupies 3-1/2 in. of vertical space in a 19 in. rack.

OPERATING VOLTAGE

24v dc unregulated.

CURRENT

(A) 10 mA per reed relay (SM8).

(B) 40 mA per armature relay (SM18).

# ORDERING INFORMATION

ORDER

(A) Reed relay.
(B) Armature relay.
(C) SM8/SM18 Modules.
(D) Isolation pads.
(E) Transistor hold-cancel circuit.

OPTIONS

(A) FR904 Equipment Frame.
(B) FR904-2 Frame Receptacle Kit.
(C) Power Supply, 24v dc.
(D) Power Supply Mounting Frame.

*McCurdy Radio Industries reserves the right, without notice, to make such changes in equipment, design, specifications, or components as progress in engineering or manufacturing techniques may warrant to improve the performance of the product.*

LSA609

# speaker-amplifier assemblies

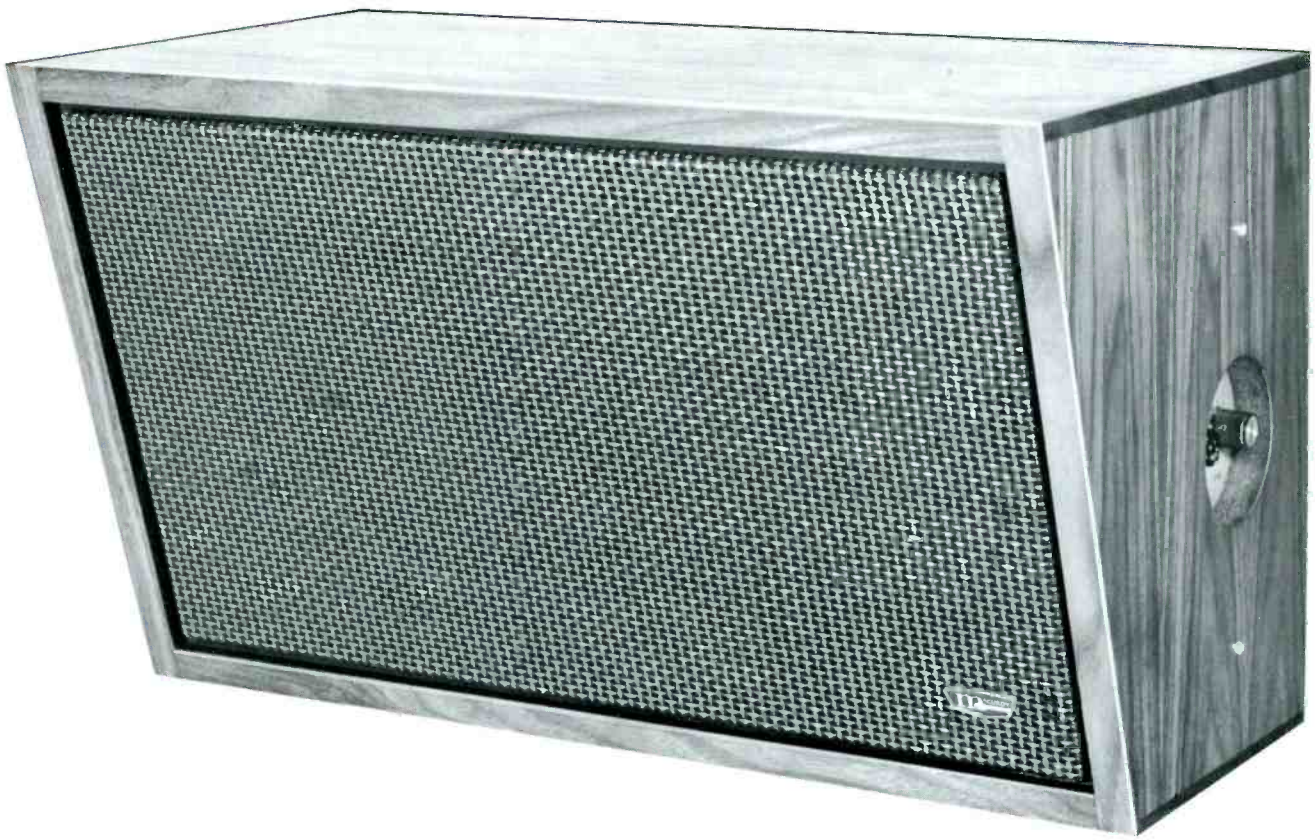

McCurdy

# description & specifications

The LSA609 Speaker/Amplifier Assembly is designed to provide quality sound from monitor feeds or from audo distribution systems. The 10-watt amplifier used in this assembly supplies an adequate reserve of low-distortion power which, combined with the acoustically-designed speaker enclosure, makes this assembly ideal for Studio, Control Room, or Classroom monitoring.

The LSA609 has a 15-degree reverse slope for wall-mounting and is fitted with a hanger bracket. It has a high-impedance input necessary for bridging a 600-ohm line, and uses the McCurdy AM415 10-watt Power Amplifier to drive a dual-cone speaker.

The dual-cone speaker is used with a special surround damping treatment to lower the free-air resonance and provide optimum damping at low frequencies. This results in an assembly possessing extremely low distortion and wide frequency response characteristics. Additional damping is applied to the interior of the speaker compartment to reduce spurious reflections from the inner surface.

The cabinet material is hand-rubbed walnut, with a frontal finish of open-weave material chosen to reduce high-frequency attenuation.

Input connections are easily made to screw terminals at the rear of the amplifier. A volume control and ac fuse are recessed in the side of the cabinet.

**Input Level:** 0 dBm, bridging, unbalanced.
**Output Level:** 10 watts max, 8 ohms.
**Source Impedance:** 600 ohms, unbalanced, or transformer balanced.
**Input Impedance:** 10,000 ohms, unbalanced.

**System Frequency Response:** ±3 dB, 50 HZ to 18 kHz.
**Power Requirements:** 117v ac, 60 Hz, 30 va.
**Dimensions:** LSA609: 11-11/16 in. deep at top, 8 in. deep at bottom, 13-3/8 in. high, 21-19/32 in wide.
**Weight:** Approximately 32 lb.

# ordering information

ORDER
LSA609 Speaker/Amplifier Assembly for wall mounting.



Printed In Canada

**McCURDY RADIO INDUSTRIES LIMITED**
108 CARNFORTH ROAD, TORONTO, ONTARIO M4A 2L4 (416) 751-6262, TELEX 06-963533, TWX 610-492-1373

**McCURDY RADIO INDUSTRIES INC.**
UNITED STATES HEAD OFFICE
1711 CARMEN DRIVE, ELK GROVE VILLAGE, ILLINOIS 60007, (312) 640-7077, TWX 910-222-0436
EAST COAST OFFICE
223 WEST SADDLE RIVER ROAD, SADDLE RIVER, N.J. 07458, (201) 327-0750, TWX 710-988-2254
BUFFALO WAREHOUSE
1051 CLINTON STREET, BUFFALO, N.Y. 14206, DIRECT LINE TO TORONTO PLANT (716) 854-6700, TWX 610-492-1373

McCurdy Radio Industries reserves the right, without notice to make such changes in equipment, design, specifications, or components as progress in engineering or manufacturing techniques may warrant to improve the performance of the product.

# LSA608
# LSA609

# SPEAKER-AMPLIFIER ASSEMBLIES

## TWO SELF-CONTAINED SPEAKER-AMPLIFIER UNITS OFFERING QUALITY PERFORMANCE FOR AUDIO MONITORING

LSA609

LSA608

## DESCRIPTION

The LSA608 and LSA609 Speaker/Amplifier Assemblies are designed to provide high-quality sound from monitor feeds or from audio distribution systems. The 10-watt amplifier used in these assemblies supplies an adequate reserve of low-distortion power which, combined with the acoustically-designed speaker enclosure, makes either assembly ideal for Studio, Control Room, or Classroom monitoring.

The LSA608 has a rectangular shape designed for table-top mounting. The LSA609 has a 15-degree reverse slope for wall-mounting and is fitted with a hanger bracket. Electronically, the units are identical, both having the high-impedance input necessary for bridging a 600-ohm line, and using the McCurdy AM415 10-watt Power Amplifier to drive a modified Philips 9710M dual-cone speaker.

The dual-cone speaker is used with a special surround damping treatment to lower the free-air resonance and provide optimum damping at low frequencies. This results in an assembly possessing extremely low distortion and wide frequency response characteristics. Additional damping is applied to the interior of the speaker compartment to reduce spurious reflections from the inner surface.

The cabinet material is hand-rubbed walnut, with a frontal finish of open-weave material chosen to reduce high-frequency attenuation.

Input connections are easily made to screw terminals at the rear of the amplifier. A volume control and ac fuse are recessed in the side of the cabinet.

McCURDY RADIO INDUSTRIES LIMITED
108 CARNFORTH ROAD — TORONTO 16 — CANADA
(416) 751-6262
TELEX 02-21660

McCURDY RADIO INDUSTRIES INCORPORATED
1051 CLINTON STREET — BUFFALO — N.Y. 14206
(716) 854-6700

## SPECIFICATIONS

INPUT LEVEL
0 dBm, bridging.

OUTPUT LEVEL
10 watts max, 8 ohms.

SOURCE IMPEDANCE
600 ohms, balanced or unbalanced.

INPUT IMPEDANCE
Greater than 10 times source impedance.

SYSTEM FREQUENCY RESPONSE
± 3 dB, 50 Hz to 18 kHz.

POWER REQUIREMENTS
117v ac, 60 Hz, 30 va.

DIMENSIONS

(A) LSA608: 9-5/16 in. deep, 13-7/16 in. high, 21-19/32 in. wide.

(B) LSA609: 11-11/16 in. deep at top, 8 in. deep at bottom, 13-3/8 in. high, 21-19/32 in wide.

WEIGHT
Approximately 32 lb.

## ORDERING INFORMATION

ORDER
LSA608 Speaker/Amplifier Assembly for table mounting.
LSA609 Speaker/Amplifier Assembly for wall mounting.

*McCurdy Radio Industries reserves the right, without notice, to make such changes in equipment, design, specifications, or components as progress in engineering or manufacturing techniques may warrant to improve the performance of the product.*

# SS3152A
# MONAURAL DISC REPRODUCER

## DESCRIPTION

The SS3152A Monaural Disc Reproducer provides complete facilities for professional reproduction of monaural disc recordings. The SS3152A is completely self-contained with three-speed turntable, viscous-damped tone arm, plug-in pickup cartridge, equalized preamplifier, audio cue switching, and power supply.

A block diagram of the SS3152A is shown in Figure 2. The standard tone arm is a Gray 208-S fitted with a variable reluctance, stereo, professional-type, pickup cartridge. The cartridge output is equalized and amplified by an AT131 preamplifier which incorporates an input impedance selector for various types of cartridge, a gain control, and a roll-off selector. The roll-off selector is located on the cue panel (see Fig. 1) and selects either RIAA equalization or extra roll-off at 10 khz for exceptionally noisy records.

The audio output is delayed slightly on turntable start to prevent starting 'wow'. The turntable may be started locally by means of the turntable speed control, or remotely by means of an external pushbutton or lever key. A motor start and cue pushbutton, located on the cue panel, permit turntable control independent of the remote switch, and audio cue switching to an external bus with bypass of the audio delay circuit.

The cabinet of the SS3152A presents a new approach to modular enclosures by McCurdy, ensuring harmony with other equipment and enabling buildup of the control room "package" (see Fig. 3).

Figure 1. SS3152A Disc Reproducer, with Optional End Bells Mounted

The top is of laminated formica, ivory in color, and the cabinet is finished in textured blue. An arm guard at the rear helps prevent accidental displacement of the tone arm. All audio, power, and control connections are accessible at the rear of the unit, and are made via connectors which are provided as standard equipment (audio connectors are Cannon XLR types).

McCURDY RADIO INDUSTRIES LIMITED
108 CARNFORTH ROAD — TORONTO 16 — CANADA
(416) 751-6262
Telex 02-21660

McCURDY RADIO INDUSTRIES INCORPORATED
57 N. PUTNAM ST. — DANVERS — MASS. — 01923
(617) 774-6411

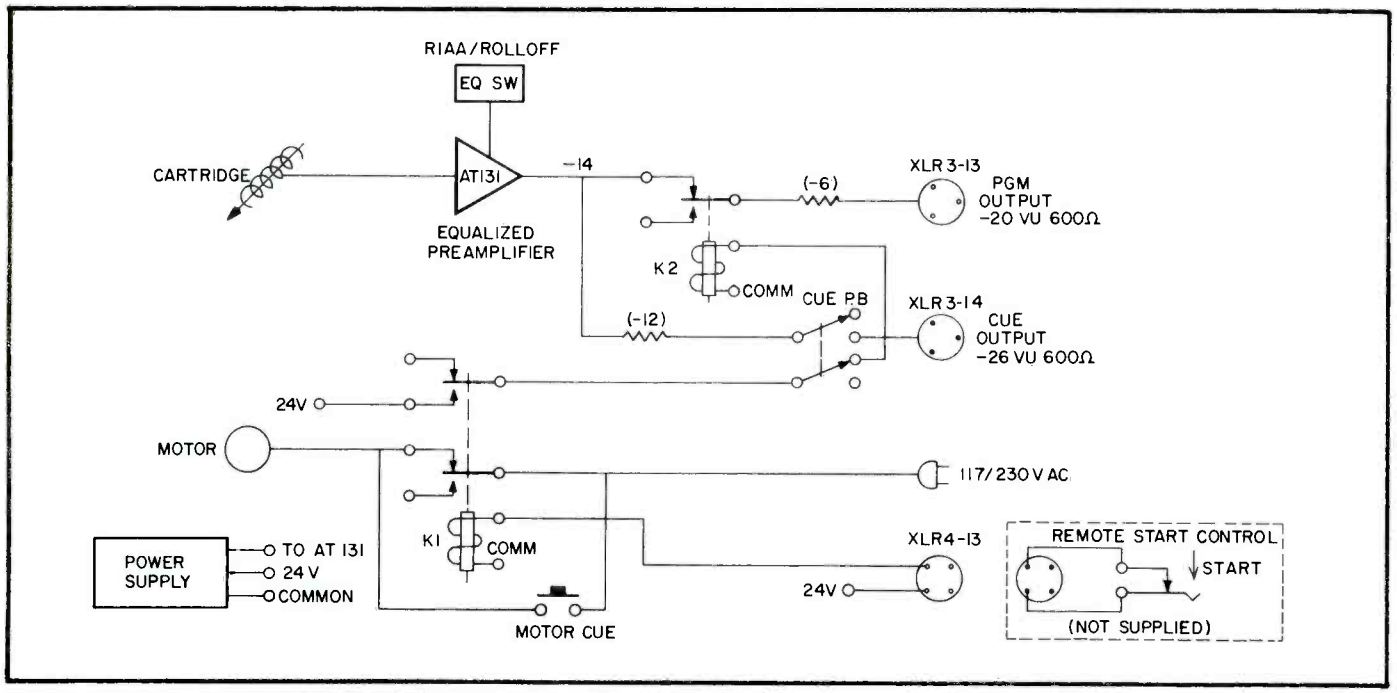


Figure 2. Block Diagram of SS3152A.

# SPECIFICATIONS

DRIVE ASSEMBLY

(1) Speed Ranges: 33-1/3, 45, and 78 rpm.

(2) Speed Regulation: ±0.2% on all ranges.

(3) Noise and Rumble: Better than -35 db ref 1.4 cm/sec peak velocity at 100 hz.

(4) Flutter and Wow: Less than 0.17%.

(5) Power Requirement: 117v ac, 60 hz, single phase, 46va (50 hz drives can be supplied).

ELECTRONIC ASSEMBLY

(1) Input Level: 5 mv.

(2) Input Impedance: Variable from 10k to 75k ohms.

(3) Equalization: RIAA or extra high-frequency roll-off (see Fig. 4)

(4) Frequency Response:

(a) Without roll-off filter; ±1db of RIAA curve, 30 hz to 15 khz, ref 1 khz.

(b) Roll-off; Greater than 14 db below RIAA response at 10 khz.

(5) Output Levels:

(a) Program; -20 dbm nom, 0 dbm max.

(b) Cue; -26 dbm nom, -6 dbm max.

ELECTRONIC ASSEMBLY (cont)

(6) Output Impedance: 600 ohms, balanced.

(7) Distortion: Less than 0.5% at 0 dbm output, 30 hz to 15 khz, using reverse RIAA input network.

(8) Output Noise Level: -64 dbm with 510-ohm input termination.

(9) Power Requirement: 117v ac, 50/60 hz, single phase, 27va (may be strapped for 230v operation).

TONE ARM AND CARTRIDGE

(1) Arm: Gray 208-S.

(2) Cartridge: Shure M44C Stereo with 0.7 mil stylus.

(3) Tracking Weight: Adjustable.

MECHANICAL

(1) Dimensions: 33-1/4 in. high (29 in. to top of Formica), 22 in. wide, 22-1/2 in. deep. Each end bell (optional) adds 3/4 in. to width.

(2) Finish: Baked textured acrylic blue.

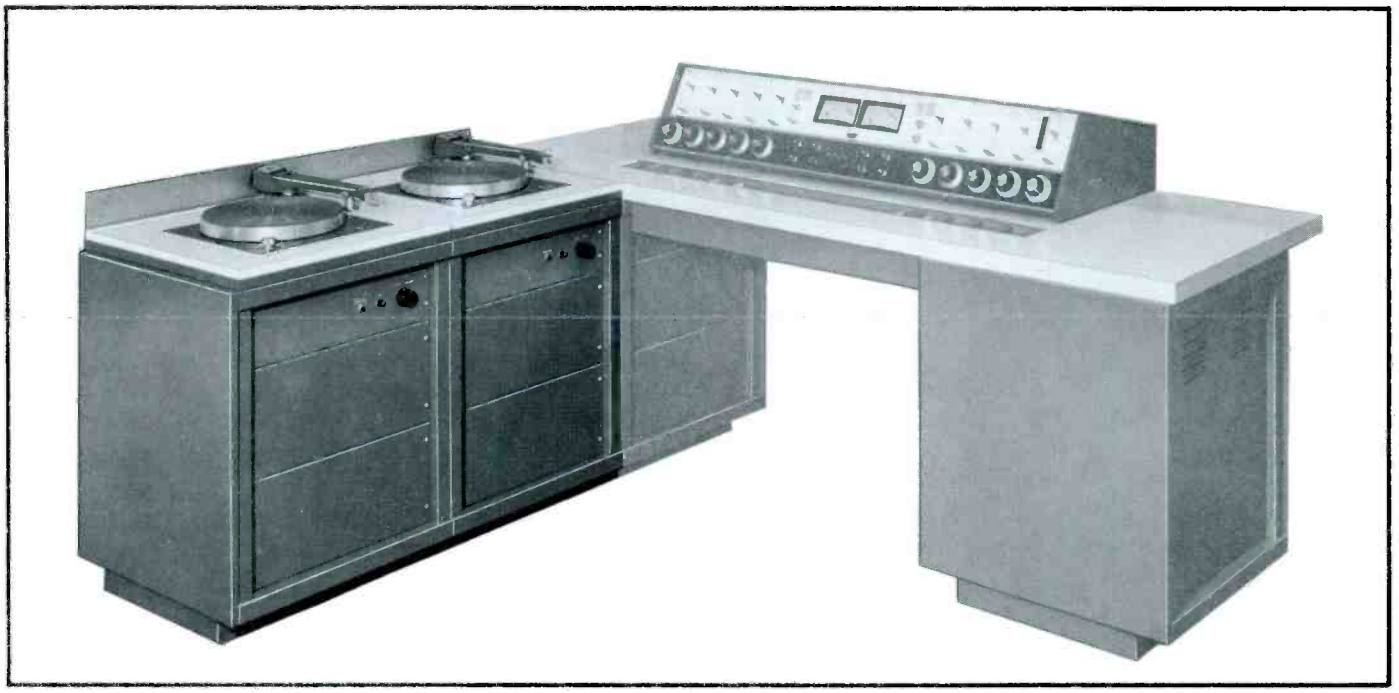

Figure 3. Two SS3152A in a Studio Package.

## ORDERING INFORMATION

The SS3152A Monaural Disc Reproducer comes complete with mating connectors, tone arm, pickup cartridge, arm guard, felt-backed rubber turntable mat, and front and rear blank panels.

Figure 4. SS3152A Equalization Characteristic.

OPTIONAL EQUIPMENT

The following units are available as options:

(1) Gray 303 Micro-Trak Tone Arm.

(2) Shure M55E Pickup cartridge.

(3) SA10048 End Bells (2 req'd).

# SS3153A

# STEREO DISC REPRODUCER

## DESCRIPTION

The SS3153A Stereo Disc Reproducer provides complete facilities for professional stereo reproduction of disc recordings. The SS3153A is completely self-contained with a CH12 three-speed turntable, viscous-damped tone arm, plug-in pickup cartridge, equalized preamplifiers, audio cue switching, and power supply. A unique system of shock mounting for the turntable, using heavy-duty rubber mounts and a system of balanced weights, reduces the top plate resonant frequency to approximately 4 hz and eliminates the effects of external vibration on the tone arm. The precision balanced tone arm permits tracking pressures as low as 1.5 grams.

The Block Diagram of the SS3153A shows the facilities provided. The standard tone arm is a Gray 'Micro-Trak' #303 fitted with a variable reluctance, stereo, professional-type, pickup cartridge. A special feature of this arm is that it is damped in the horizontal direction only, to eliminate skating, while allowing free vertical movement on two jewel bearings. The cartridge outputs are equalized and amplified by AT131 preamplifiers. Each AT131 incorporates an input impedance selector for various types of cartridge, a gain control, and a roll-off circuit. A dual roll-off selector is located on the cue panel and selects either RIA A equalization or extra roll-off at 10 khz for exceptionally noisy records.

The audio output is delayed slightly on turntable start to prevent starting 'wow'. The turntable may be started locally by means of the turntable speed control, or remotely by means of an external push-button or lever key. Motor start and cue pushbuttons, located on the cue panel, permit turntable control independent of the remote switch, and audio cue switching to an external bus with bypass of the audio delay circuit.

SS3153A Disc Reproducer, with Optional End Bells Mounted

The cabinet of the SS3153A presents a new approach to modular enclosures by McCurdy, ensuring harmony with other equipment and enabling buildup of the control room "package". The top is a laminated formica, ivory in color, and the cabinet is finished in textured blue. An arm guard at the rear helps prevent accidental displacement of the tone arm. All audio, power, and control connections are accessible from the front of the unit behind a blank cover plate and are made via connectors which are provided as standard equipment (audio connectors are Cannon XLR types).

McCURDY RADIO INDUSTRIES LIMITED
108 CARNFORTH ROAD — TORONTO 16 — CANADA
(416) 751-6262
TELEX 02-21660

McCURDY RADIO INDUSTRIES INCORPORATED
1051 CLINTON STREET — BUFFALO — N.Y. 14206
(716) 854-6700

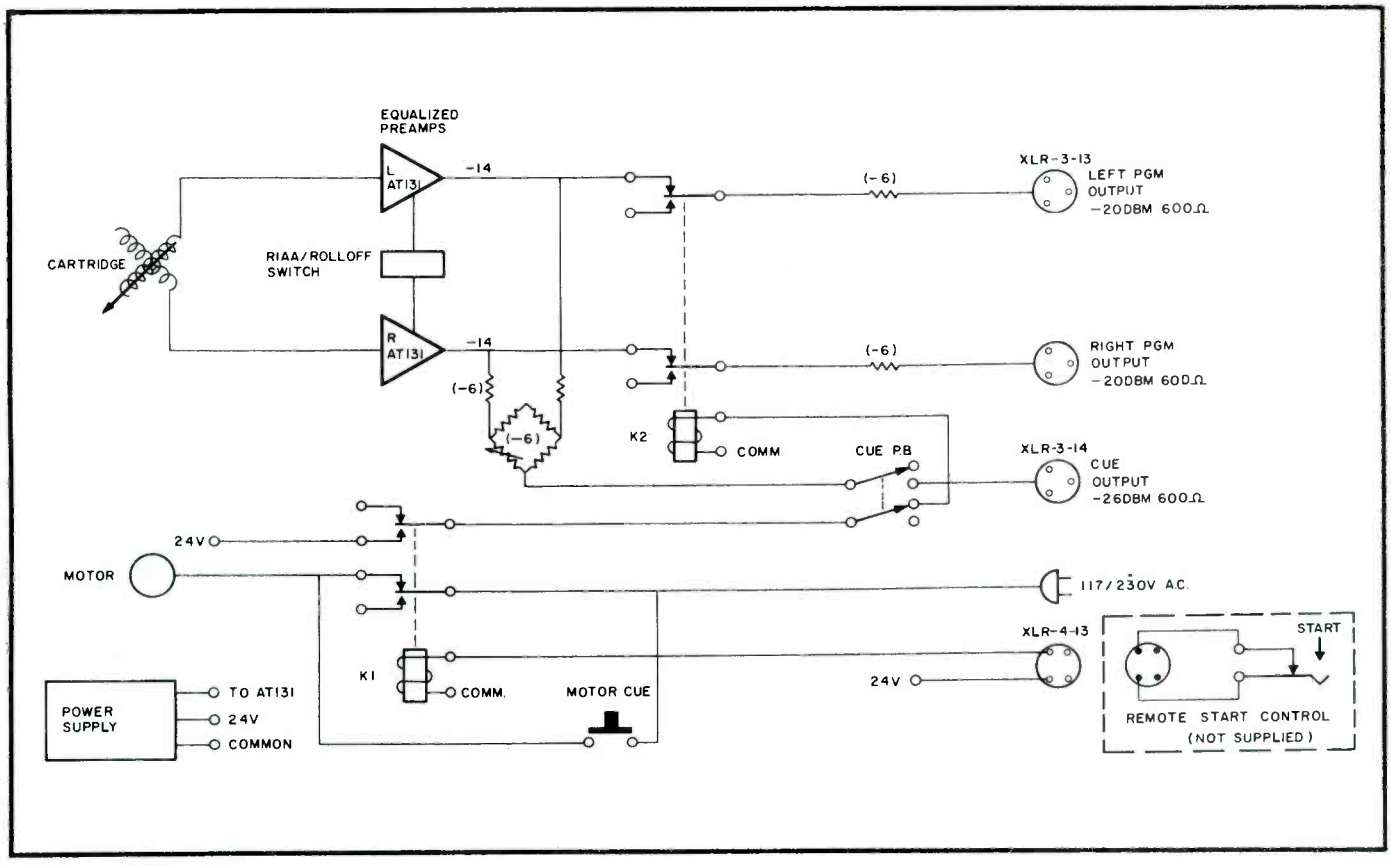


Block Diagram of SS3153A

# SPECIFICATIONS

## TURNTABLE DRIVE ASSEMBLY

(1) Speed Ranges: 33-1/3, 45, and 78 rpm.

(2) Speed Regulation: ±0.2% on all ranges.

(3) Noise and Rumble: Better than NAB reproducing standards, June 1953, Section 1.2.

(4) Flutter and Wow: Less than 0.17%.

(5) Power Requirement: 117v ac, 60 hz, single phase, 46 va (230v, 50 hz drives can be supplied).

## ELECTRONIC ASSEMBLY

(1) Input Level: 5 mv, each preamplifier, via pin-type phone plug.

(2) Input Impedance: Variable from 10K to 75K ohms.

(3) Equalization: RIAA or extra high-frequency roll-off (see Curve).

(4) Frequency Response:

(a) Without roll-off filter; ±1 db of RIAA curve, 30 hz to 15 khz, ref 1 khz.

(b) Roll-off; Greater than 14 db below RIAA response at 10 khz.

(5) Output Levels:

(a) Program; -20 dbm nom, 0 dbm max, with 5 mv input.

(b) Cue; -26 dbm nom, -6 dbm max.

(6) Output Impedance: 600 ohms, balanced.

(7) Distortion: Less than 0.5% at 0 dbm output, 30 hz to 15 khz, using reverse RIAA input network.

(8) Output Noise Level: AT131 input terminated with 510 ohms; -78 dbm nom, -60 dbm max.

(9) Stereo Separation: 70 db (less cartridge).

(10) Power Requirement: 117v ac, 50/60 hz, single phase, 35 va (may be strapped for 230v operation).

## TONE ARM AND CARTRIDGE

(1) Arm: Gray 'Micro-Trak' Model 303, 12-inch, with plug-in cartridge head.

(2) Cartridge: Shure M44C Stereo with 0.7 mil stylus.

(3) Tracking Weight: Adjustable; weight kit supplied with tone arm.

GENERAL

(1) Overall Dimensions: 33-1/4 in. (84.5 cm) high, [29 in. (63.7 cm) to top of Formica], 22 in. (55.9 cm) wide, 22-1/2 in. (57.2 cm) deep. Each end bell (optional) adds 3/4 in. (1.9 cm) to width.

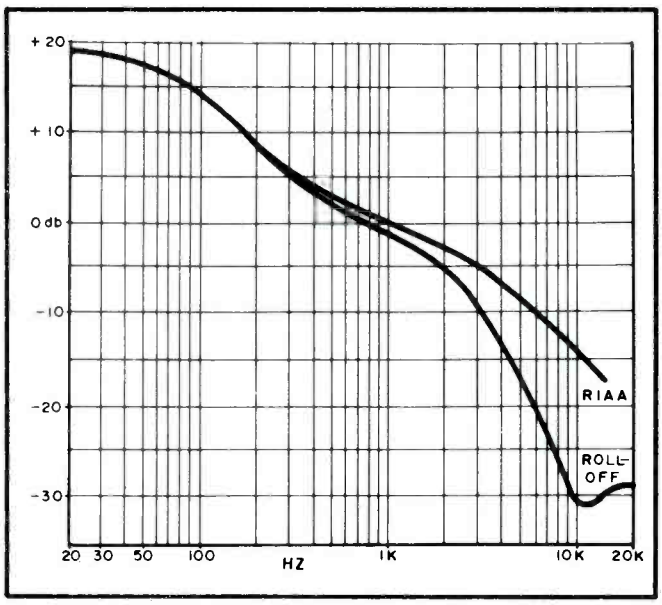


SS3153A Equalization Characteristic

(2) Ambient Temperature: 0 to 55°C.

(3) Finish: Cabinet; baked textured acrylic blue. Top; Formica Antique White.

(4) Shipping Weight: 360 lb (163.3 kg) approx.

## ORDERING INFORMATION

The SS3153A Stereo Disc Reproducer is supplied complete with mating connectors, tone arm, stereo pickup cartridge, arm guard, 45 rpm adapter, felt-backed rubber turntable mat, and front and rear blank panels.

OPTIONAL EQUIPMENT

The following units are available as options:

(1) Gray 306 (16 in.) Micro-Trak Tone Arm.

(2) Shure M55E Pickup Cartridge.

(3) McCurdy AT264/3 Cue Amplifier/Speaker Kit.

(4) SA10048 End Bells (2 req'd).

# SS 3157-A

## monaural disc reproducer

McCurdy

# description & specifications

The SS3157A Monaural Disc Reproducer provides facilities for professinoal monophonic reproduction of monaural or stereo disc recordings. The SS3157A is completely self-contained with three-speed turntable, tone arm, plug-in pickup cartridge, equalized preamplifier, audio cue switching, and power supply.

The enclosed simplified diagram shows the facilities of the SS3157A. The turntable is the McCurdy CH12A Transcription Turntable with speeds of 33⅓, 45 and 78 rpm. The standard tone arm is a Micro Trak 303 utilizing a Stanton 500AL or Shure M44C professional-quality magnetic stereo cartridge. The cartridge output is equalized and amplified by an AT135 preamplifier which incorporates an input load control (for various types of cartridge) and a roll-off selector. The roll-off selector is located on the control panel and selects either RIAA equalization or variable roll-off from 1 kHz to 16 kHz (see Curve). The roll-off amplitude is variable from zero to a maximum of 10 dB below RIAA between 10 kHz and 16 kHz.

The turntable start system may be set up for local operation by means of the turntable speed selector, or for remote operation by means of a locking or two momentary ON/OFF pushbuttons, lever key, etc. There is also a MOTOR START pushbutton (momentary) for cueing independently of the normal start/stop circuits.

On remote operation, the audio output is delayed slightly on turntable start to prevent speed-up 'wow'. This is accomplished by holding the mute relay (K1) energized until the turntable reaches operating speed, after which this relay deenergizes and completes the audio output circuit. The delay is adjustable from 0.2 to 1.5 seconds, approximately.

For instant cueing, a MOTOR START pushbutton and a CUE pushbutton permit bypassing the delay circuit so that the program output is immediately available, as well as the normal cue output. The cue output is taken from a combining network.

An optional AM275 3 Watt Cue Amplifier may be installed in the SS3157A.

The simplified diagram shows one of the AT135 Phono Preamplifiers in dotted outline as this would be provided only on the stereo model (SS3158A or SS3159).

The output and cue resistive pads, relay K1, and the power supply regulators are contained on one SM25 plug-in printed-circuit card. This card and the amplifiers plug into a prewired frame which also contains the power transformer and connector panel.

The basic cabinet of the SS3157A is finished in textured blue acrylic with wood-grain vinyl overlays applied at points of extra wear such as the control panel and end bells. The top is of laminated formica, ivory in color, with a tinted plexiglas guard at the rear to help prevent accidental displacement of the tone arm. All audio and control connections are accessible at the front of the unit, and are made via connectors which are provided as standard equipment (audio connectors are Cannon XLR types).

## SPECIFICATIONS

### TURNTABLE

(1) **Type:** McCurdy CH12A; Capstan-Drive.
(2) **Speed Ranges:** 33⅓, 45, and 78 rpm.
(3) **Speed Regulation:** ±0.2% on all ranges.
(4) **Noise and Rumble:** Better than –35 dB ref 1.4 cm/sec peak velocity at 100 Hz.
(5) **Flutter and Wow:** Less than 0.17%.
(6) **Power Requirement:** 117v ac, 60 Hz, single phase, 46va (50 Hz drives can be supplied).

### ELECTRONICS ASSEMBLY

(1) **Input Level:** 5 mv nominal.
(2) **Input Loading:** Variable from 10k to 250k.
(3) **Equalization:** RIAA or roll-off at 16 kHz (see Response Curve).
(4) **Frequency Response:**
  (a) Without roll-off; within 0.5 of RIAA curve from 30 Hz to 10 KHz.
  ±1 dB of RIAA curve, 10 KHz to 20 KHz.
  (b) Roll-off; adjustable from 0 to 10dB below RIAA response between 10 kHz and 16 kHz (see Curve).
(5) **Output Levels:**
  (a) Program: adjustable –20 dBm to +8 dBm.
  (b) Cue: adjustable to +8 dBm.
(6) **Output Impedance:** 600 ohms, balanced.
(7) **Distortion:** Less than 0.5% at +8 dBm output, 30 Hz to 20 kHz, using reverse RIAA input network.
(8) **Power Requirement:** 117v ac, 60 Hz, single phase, 50 va approximately.

### TONE ARM AND CARTRIDGE

(1) **Arm:** Micro Trak 303.
(2) **Cartridge:** Stanton 500AL or Shure M44C.

### MECHANICAL

(1) **Dimensions:** 33¼ in. high (30 in. to top of Formica), 22 in. wide, 22½ in. deep. Each end bell (optional) adds ¾ in. to width.
(2) **Finish:** Baked textured acrylic blue, complemented by wood-grain vinyl overlay for added protection at points of abnormal wear.
(3) **Weight:** 90 lb., approx.

---

## OPTIONAL EQUIPMENT

(1) Special Tone Arm, other than the standard (Shure SME 3009 and 3012, for example).
(2) AM275 Cue Amplifier.
(3) SA10048 End Bells with vinyl overlay (2 req'd).

# functional

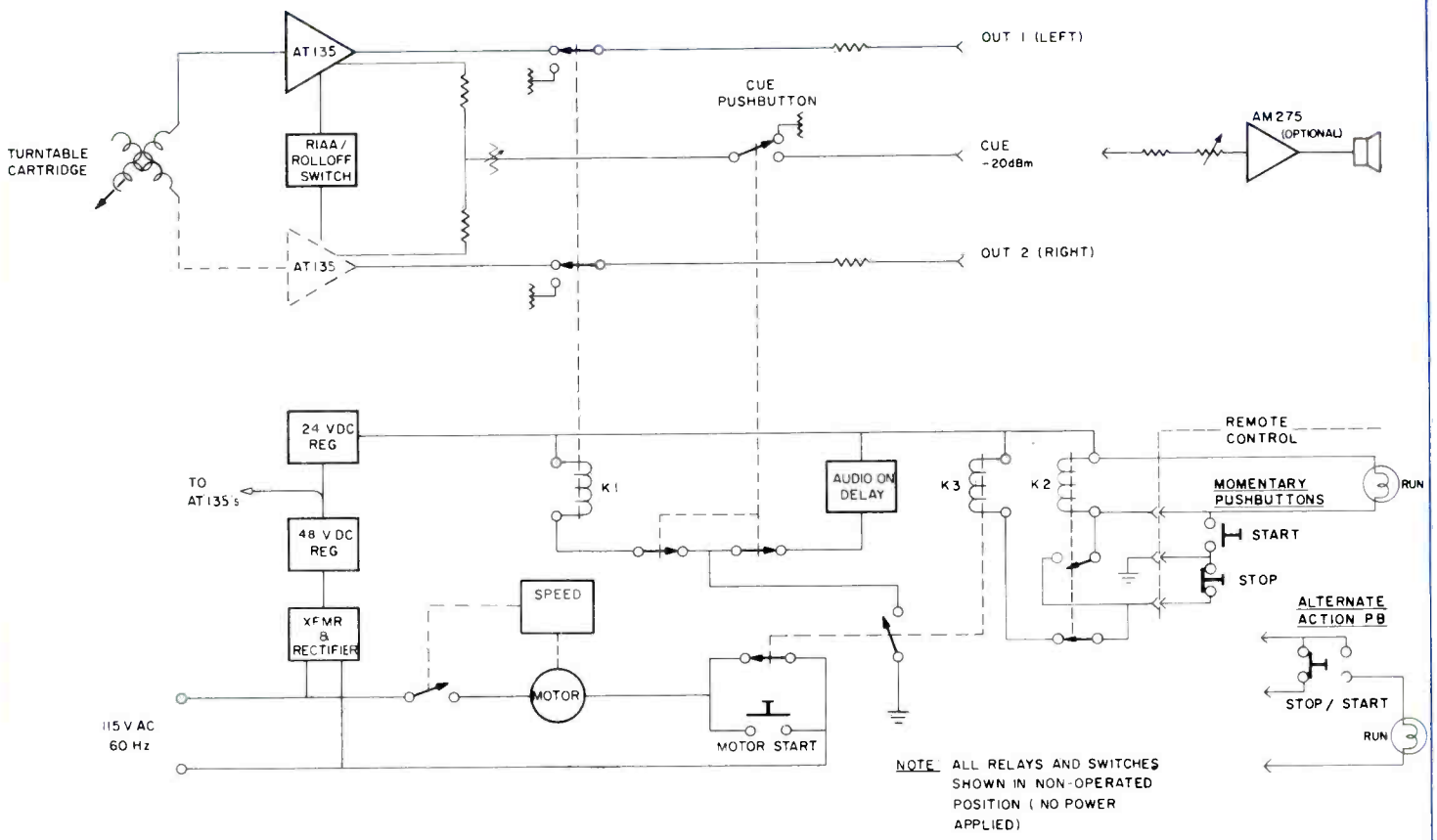


Simplified Schematic of SS3157A

Equalization Characteristic of SS3157A

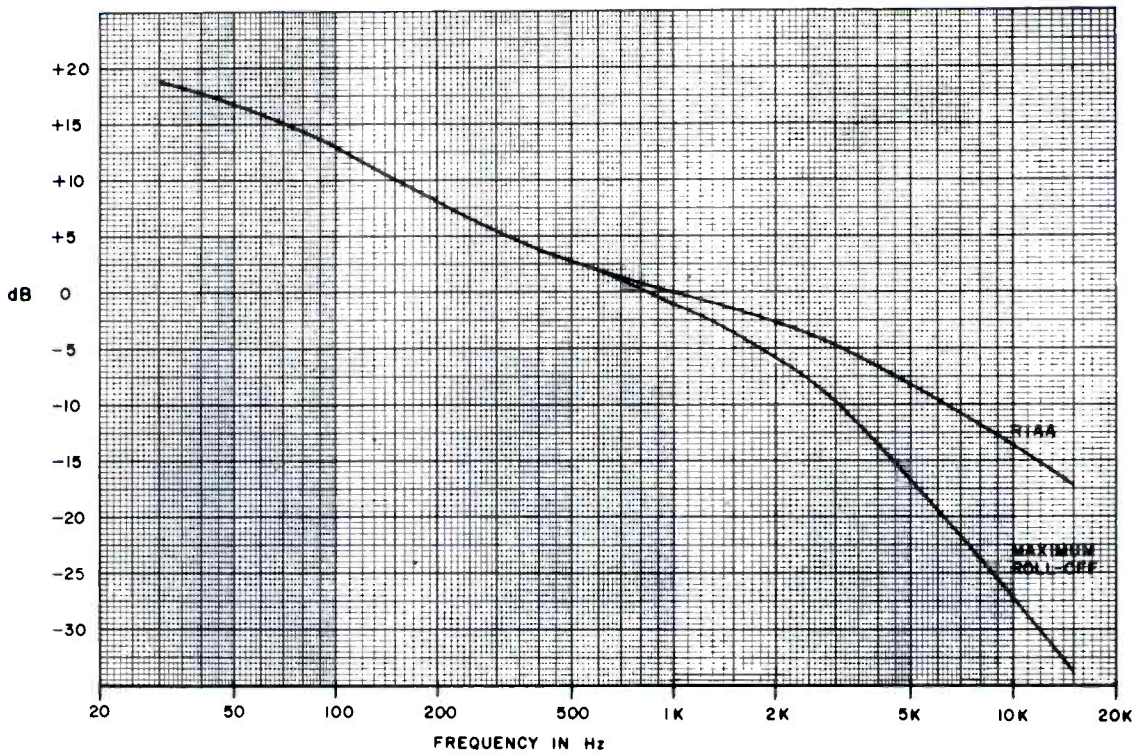

# ordering information

SS3157A Monaural Disc Reproducer which comes complete with mating connectors, tone arm, pick-up cartridge, arm guard, felt-backed rubber turn-table mat, and front and rear blank panels.

The price for the standard SS3157A does not include optional equipment nor the installation of optional equipment.

# installation

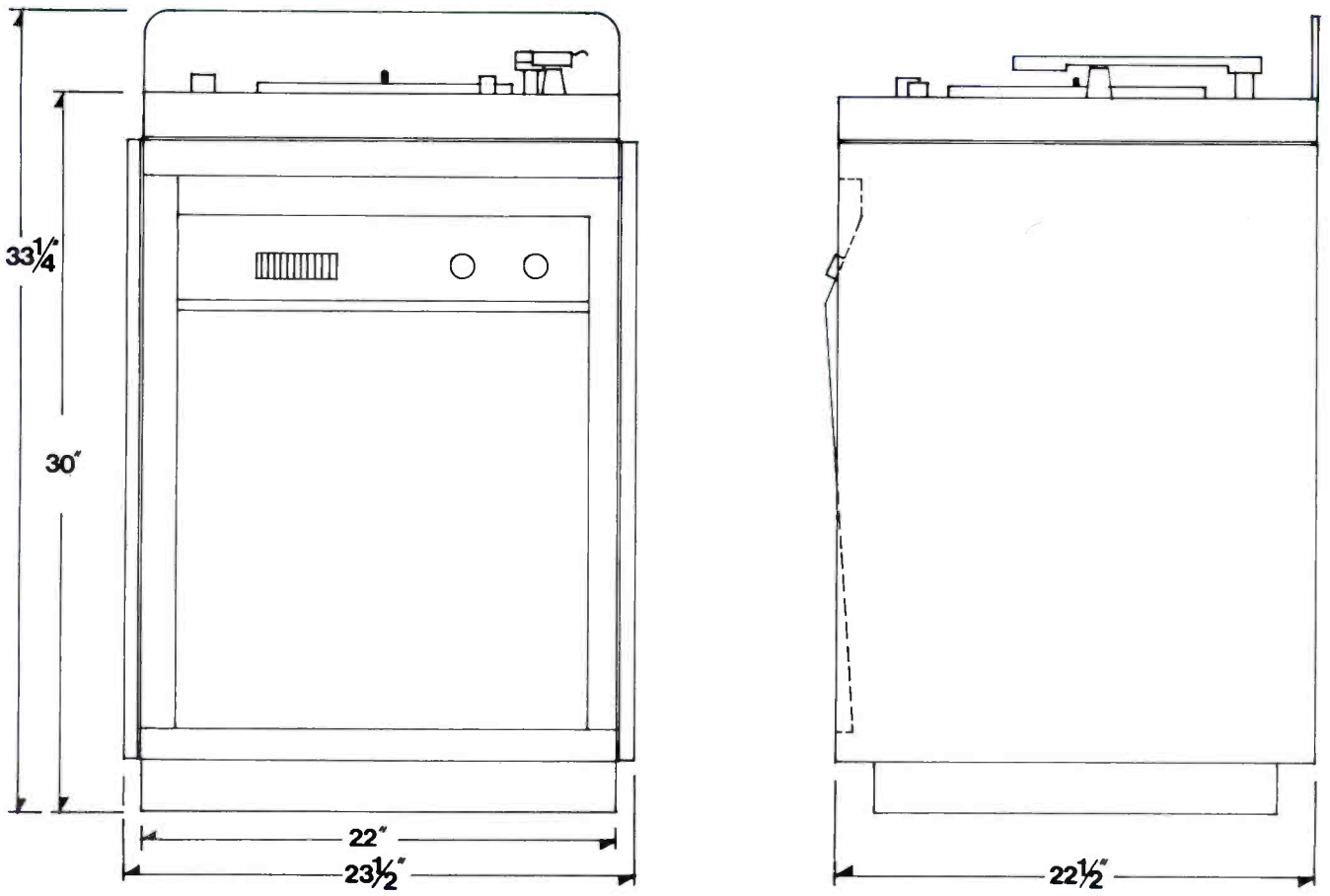


Printed in Canada

**McCURDY RADIO INDUSTRIES LIMITED**
108 CARNFORTH ROAD, TORONTO, ONTARIO M4A 2L4 (416) 751-6262, TELEX: 06-963533

**McCURDY RADIO INDUSTRIES INCORPORATED**
1051 CLINTON STREET, BUFFALO, N.Y. 14206 (716) 854-6700, TWX 610-492-3219

EAST COAST OFFICE: SADDLE RIVER, N.J. P.O. BOX 86, ZIP 07458, PHONE (201) 327-0750, TWX 610-492-3219

McCurdy Radio Industries reserves the right, without notice to make such changes in equipment, design, specifications, or components as progress in engineering or manufacturing techniques may warrant to improve the performance of the product.

# SS3159C

## stereo disc reproducer

McCurdy

# description & specifications

The SS3159C stereo disc reproducer provides complete facilities for professional stereo reproduction of disc recordings. The SS3159C is completely self-contained with a three-speed turntable, tone arm, plug-in pickup cartridge, equalized preamplifiers, audio cue switching and power supply.

The enclosed simplified functional diagram shows the facilities of the SS3159C. The turntable used is the Panasonic Technics SP10 Mk II direct-drive transcription turntable with speeds of 33$^1/_3$, 45 and 78 rpm. The standard tone arm is a Micro Trak 303 utilizing a Stanton 500AL or Shure M44C professional-quality stereo magnetic cartridge. The cartridge output is equalized and amplified by the AT235 preamplifiers which incorporate gain and equalizing trim controls along with selectable roll-off. The roll-off selector is located on the cue panel and selects either RIAA equalization or RIAA equalization with additional roll-off above 5kHz (3dB point).

The turntable start system may be set up for local operation by means of the turntable speed selector, or for remote operation by means of a locking or two momentary ON/OFF pushbuttons, lever key, etc. There is also a MOTOR START pushbutton (momentary) for cueing independently from the normal start/stop circuits.

On remote operation, the audio outputs are delayed slightly on turntable start to prevent speed-up 'wow'. This is accomplished by holding the mute relay (K1) energized until the turntable reaches operating speed, after which this relay de-energizes and completes the audio circuit. The delay is adjustable from approximately 200ms to 1.5 seconds.

For instant cueing, the MOTOR START pushbutton permits bypassing the delay relay, allowing immediate availability of the program output for local and/or remote cueing. Local cueing is available when the optional AM275 three Watt cue amplifier is installed. The REMOTE CUE output is used when it is desired to cue the turntable output via the cue position on a console input fader.

Relay KI, its associated delay circuit and the power supply regulators are contained on a plug-in printed circuit card.

To facilitate remote operation, using either a single alternate action (locking) or two momentary pushbuttons, an interface is required to control the SP10 Mk II turntable. This is achieved by a logic circuit, also contained on a plug-in printed circuit card.

The delay and regulator, control interface, preamplifiers and optional cue amplifier cards plug into a self-contained, prewired frame which also contains the power transformer, control relays and a connector panel.

The basic cabinet of the SS3159C is finished in textured blue acrylic with wood-grain vinyl overlays applied at points of extra wear such as the control panel and end bells. The top is of laminated formica, ivory in colour, with a tinted plexiglass guard at the rear to help prevent accidental displacement of the tone arm. All audio and control connections are accessible at the front of the unit, and are made via connectors which are provided as standard equipment.

## SPECIFICATIONS

### TURNTABLE:

**TYPE:**
Panasonic Technics SP10 Mk II

**DRIVE:**
Direct drive by brushless DC motor, quartz crystal controlled by phase lock servo circuit.

**SPEEDS:**
33$^1/_3$, 45 and 78.3 rpm, ±0.002%, up to a load of 4.3 lb.-in. (5 kg. cm.)

**START-UP TIME:**
0.25 sec. (25° rotation), maximum, to 33$^1/_3$ rpm.

**STOP TIME:**
0.3 sec. (30° rotation), maximum, from 33$^1/_3$ rpm to full stop.

**WOW AND FLUTTER:**
0.25% maximum, W.R.M.S.

**RUMBLE:**
—50dB (DIN A), -60dB (IEC B), —70dB (DIN B)

**POWER REQUIREMENTS:**
117 volts, 50/60Hz, single phase, 30 VA

### ELECTRONICS ASSEMBLY:

**INPUT LEVEL:**
5 mV nominal

**INPUT IMPEDANCE:**
47,000 ohms

**EQUALIZATION:**
Within ±0.5dB of RIAA curve between 30Hz and 15kHz, or roll-off at 5kHz.

**OUTPUT LEVELS:**
1) Program; 0dBm, 600 ohms, nominal, matching
2) Local Cue; 0dBm, 600 ohms, nominal, bridging
3) Remote Cue; 0dBm, 600 ohms, nominal, matching

**OUTPUT IMPEDANCE:**
600 ohms, active-balanced, program and cue outputs

**DISTORTION:**
0.25% maximum, 30Hz to 15kHz, at +8dBm output

**POWER REQUIREMENTS:**
117 Volts, 50/60 Hz, single phase, 40 VA

### MECHANICAL:

**OVERALL DIMENSIONS:**
33.25 in. (84.5 cm) high, 30 in. (76.2 cm) to top of formica; 22 in. (55.9 cm) wide; 22.5 in. (57.2 cm) deep. Each optional end bell adds 0.75 in. (19 mm.) to width.

**FINISH:**
Dark blue textured baked acrylic, complemented by wood-grain vinyl overlay for added protection at points of abnormal wear.

**WEIGHT:**
200 lbs. (91 kg.), approximately

**OPTIONAL EQUIPMENT:**
1) Special tone arms as required; for example, Shure SME3009 or SME3012.
2) SA10048 end bells with vinyl overlay, 2 required.
3) AM275 cue amplifier.

# functional

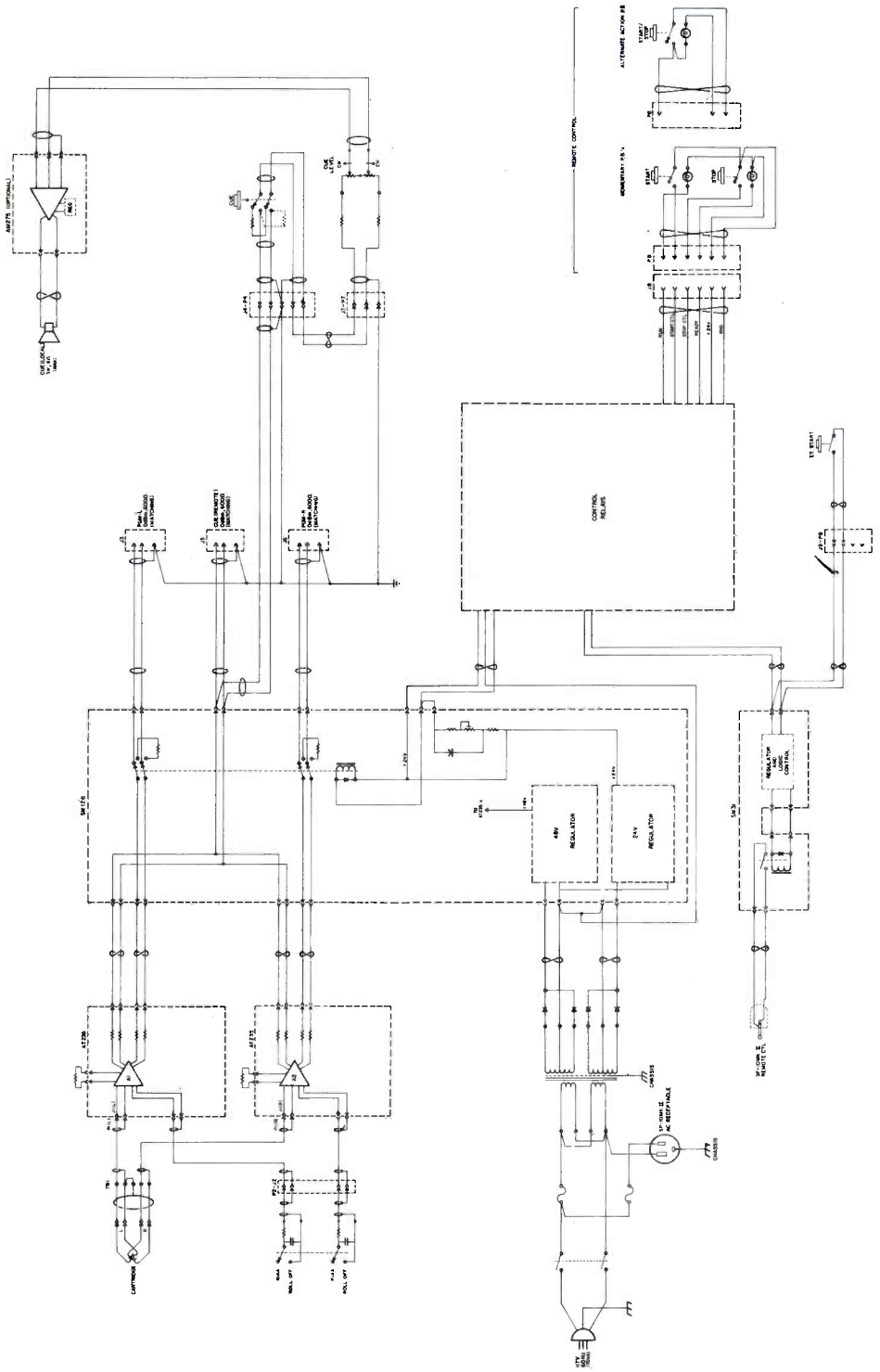

CONTROL RELAYS
48V REGULATOR
24V REGULATOR
REGULATOR AND LOGIC CONTROL
CHASSIS

# ordering information

The SS3159C stereo disc reproducer is complete with mating connectors, tone arm, pickup cartridge, arm guard, rubber turntable mat and front and rear blank panels.

The price for the standard SS3159C does not include optional equipment nor the installation of optional equipment.

# installation

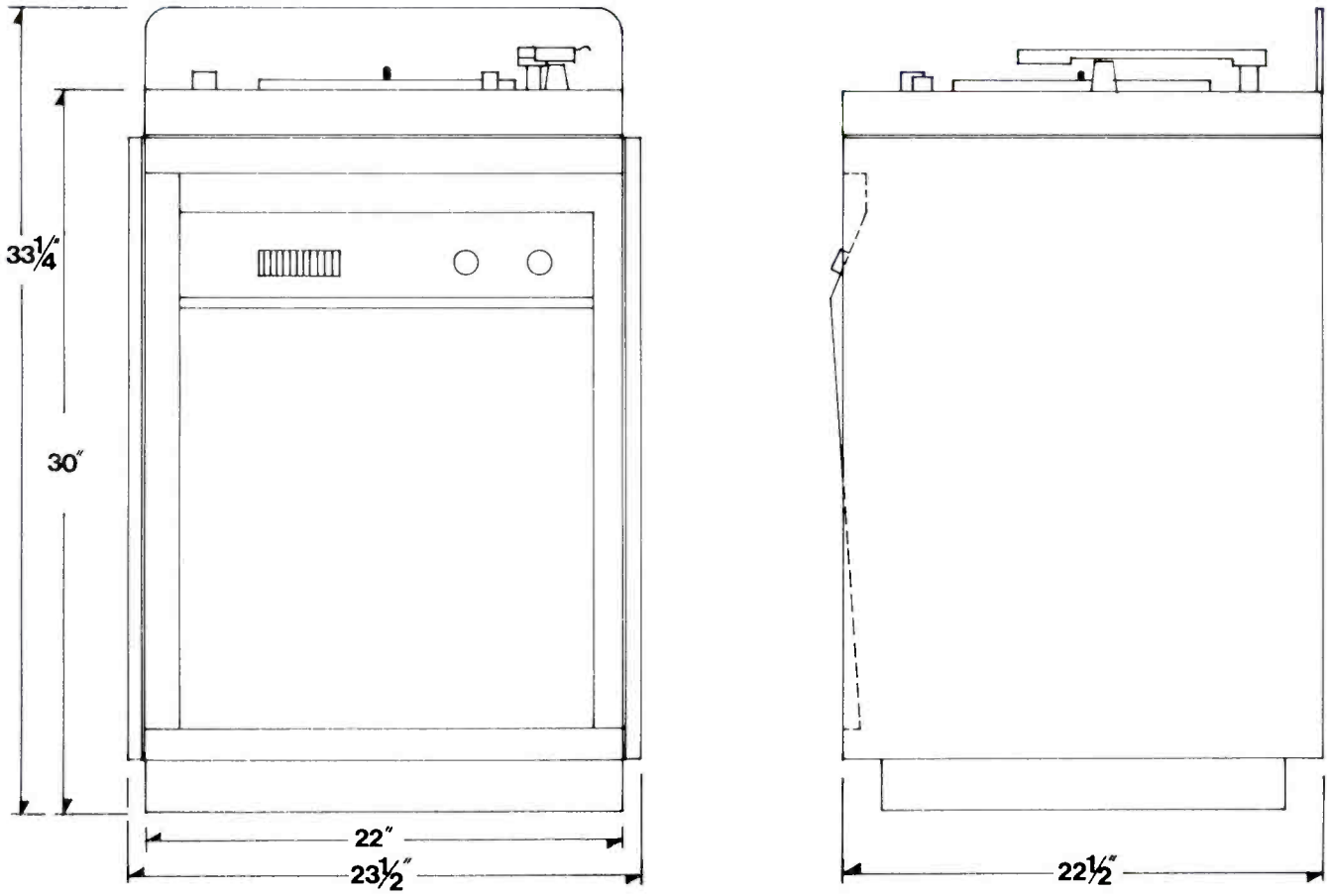




Printed in Canada

**McCURDY RADIO INDUSTRIES LIMITED**
108 CARNFORTH ROAD, TORONTO, ONTARIO M4A 2L4 (416) 751-6262, TELEX 06-963533, TWX 610-492-1373

**McCURDY RADIO INDUSTRIES INC.**
UNITED STATES HEAD OFFICE
1711 CARMEN DRIVE, ELK GROVE VILLAGE, ILLINOIS 60007, (312) 640-7077, TWX 910-222-0436
EAST COAST OFFICE
223 WEST SADDLE RIVER ROAD, SADDLE RIVER, N.J. 07458, (201) 327-0750, TWX 710-988-2254
BUFFALO WAREHOUSE
1051 CLINTON STREET, BUFFALO, N.Y. 14206, DIRECT LINE TO TORONTO PLANT (716) 854-6700, TWX 610-492-1373

McCurdy Radio Industries reserves the right, without notice to make such changes in equipment, design, specifications, or components as progress in engineering or manufacturing techniques may warrant to improve the performance of the product.

# SP10 MKII
## direct drive turntable

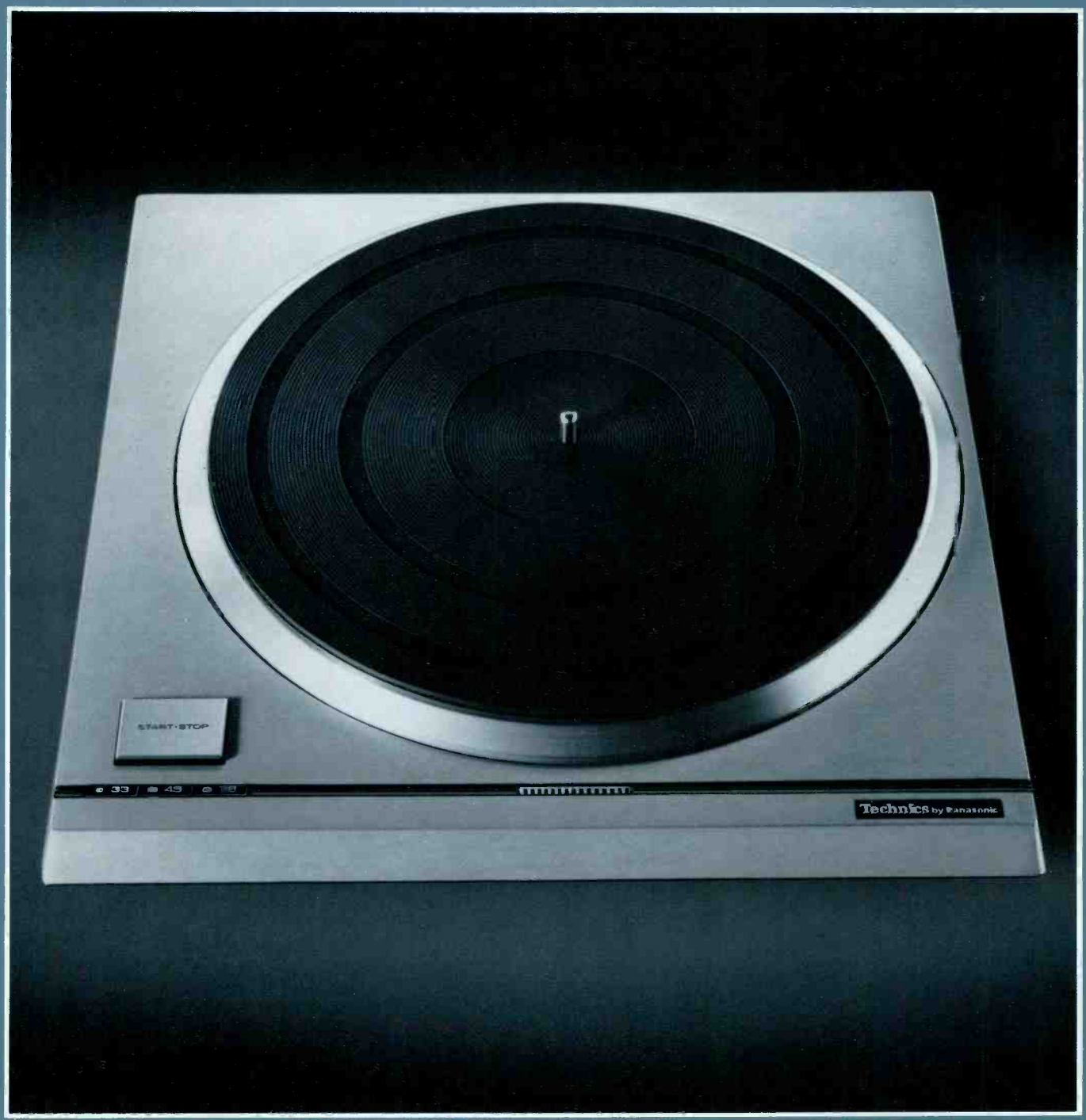


McCURDY

# description

The SP10 MKII turntable has been engineered specifically for high-quality audio applications. It offers the highest quality, lowest noise operation available today thus making it ideal for quality music applications. The turntable adds virtually nothing in the way of noise or wow and flutter to the audio recorded on the disc.

The SP10 MKII's electronically controlled brushless direct drive DC motor rotates at precisely the selected speed, eliminating all extraneous mechanical parts normally associated with turntable drive systems.

The absence of belts and idler wheels means there are few parts to wear out, with an attendant reduction of maintenance time and extension of useful life.

Rotational speed of the SP10 MKII is held to the extremely accurate tolerance ±.002% by the use of a quartz crystal oscillator as a frequency reference. This allows the motor speed to be controlled independently of environmental changes, such as temperature variations or fluctuations in power line voltage or frequency. Speed accuracy will be maintained even with wide variations in power line voltage.

Use of this electronic servo-controlled, direct-drive system assures that the wow and flutter will be less than .025%, weighted, RMS and start-up time will be very rapid. Running speed is reached in less than .25 sec, or 25° of turntable rotation, at 33⅓ RPM, allowing accurate and immediate cueing. Speed changes, also, are accomplished very rapidly, taking no more than 0.4 sec. for the turntable speed to stabilize.

The reference signal from the quartz oscillator is also used to power the neon lamp which illuminates the built-in stroboscope. Wave shaping by the strobe logic circuit gives a bright, clear strobe whose accuracy is independent of power line frequency fluctuations.

With the increasing demand for high quality standards, it is imperative that vertical as well as horizontal "rumble" be minimized. This "rumble" is generally caused by the motor and drive system vibrations being transmitted to the turntable platter, and thus to the disc and pick-up stylus. The low-speed servo controlled motor of the SP10 MKII has the inherent advantage of very little vibration. Therefore, rumble figures exhibited by the SP10 MKII are better than −50dB (DIN weighting A), −60dB (IEC weighting B) and −70dB (DIN weighting B).

Additionally, the SP10 MKII has a non-magnetic, dynamically balanced, die-cast aluminum turntable platter whose 6.4 lbs of mass provides a strong speed-smoothing flywheel effect.

The SP10 MKII is manufactured to stringent broadcast specifications by Matsushita Electric Industrial Co. Ltd., and is sold under the "Technics" label.

# specifications

TYPE: Direct drive.
MOTOR: Ultra low speed brushless electronic commutator DC.
DRIVE SYSTEM: Quartz crystal controlled, phase-locked electronic servo.
SPEEDS: 33⅓, 45 and 78.26 RPM.
SPEED CHANGE METHOD: Electronic.
SPEED ACCURACY: better than ±.002%.
SPEED ACCURACY WITH VARYING LOAD: 0% up to a maximum load of 4.3 lbs in. (5 kg cm).
WOW and FLUTTER: less than .025% RMS, weighted ± .035% peak, weighted.
RUMBLE: Better than −50dB (DIN A) −60dB (IEC B) −70dB (DIN B)
STARTING TORQUE: 5.2 lbs in. (6 kg cm).
START-UP TIME: .25 sec. (25° rotation) to 33$^{1}/_{3}$ RPM.
BRAKING TIME: .3 sec. (30° rotation) from 33$^{1}/_{3}$ RPM to stop.
SPEED CHANGE TIME: .4 sec. from 33$^{1}/_{3}$ to 78.26 RPM.
TURNTABLE PLATTER:
Material: Dynamically balanced, die-cast aluminum.
Weight: 6.4 lbs (2.9 kg).
Diameter: 12$^{19}/_{32}$ in. (32 cm).
Moment of inertia: 130 lbs in$^2$. (380 kg cm$^2$).
DIMENSIONS: 4$^{1}/_{64}$ in. H × 14$^{31}/_{64}$ in. W × 14$^{31}/_{64}$ in. D. (10.25 cm × 36.85 cm × 36.85 cm)
WEIGHT: 20.9 lbs (9.5 kg).
POWER REQUIREMENTS: 120V AC, 50/60Hz, 20W.

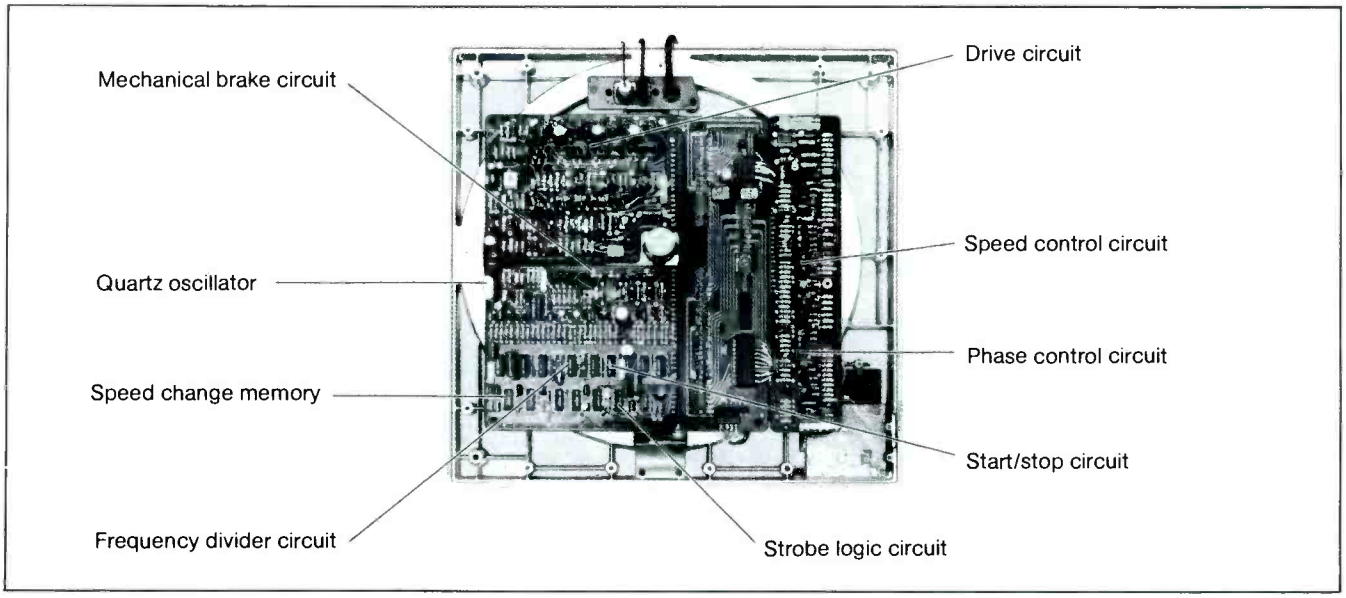


SP10 MKII Drive Electronics. The stable and highly accurate rotation of the SP10 MKII is obtained with analog-digital circuitry using the latest electronic technology.

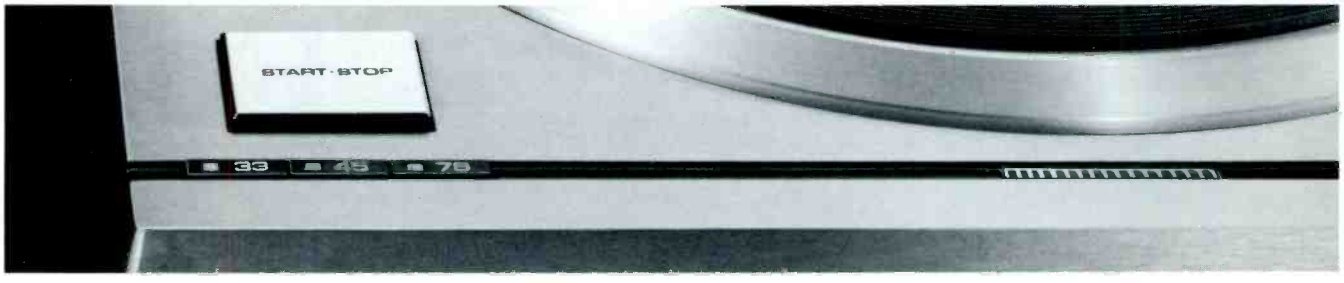


Automatic Electronic Speed Control

SP10 MK II DIRECT DRIVE TURNTABLE

# performance characteristics

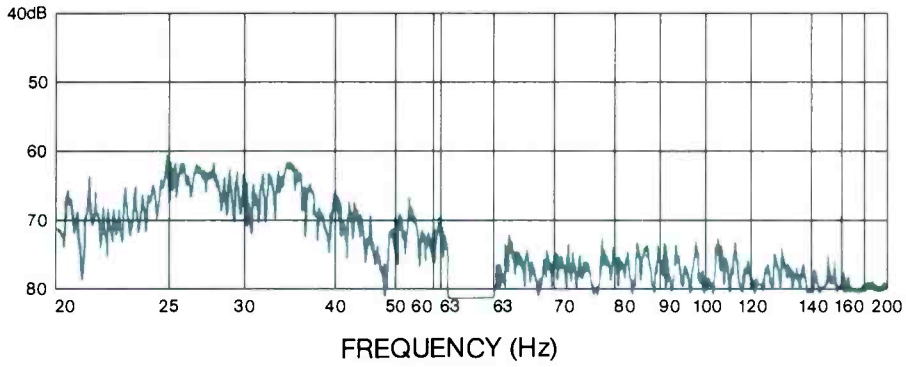


FREQUENCY SPECTRUM OF RUMBLE

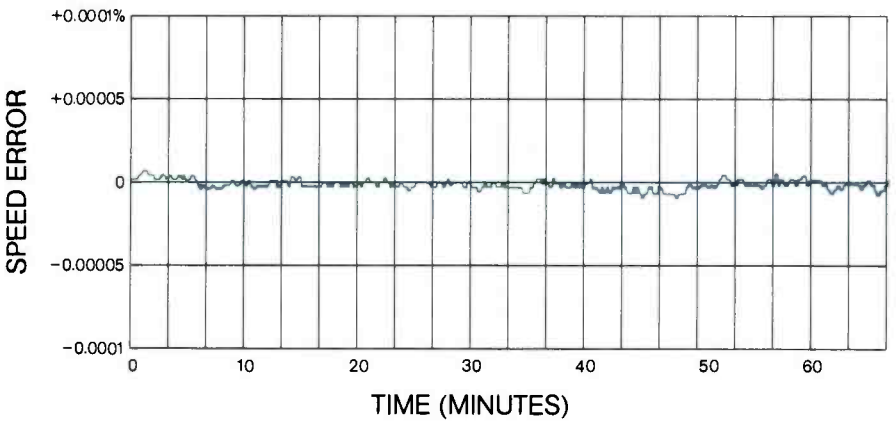


DRIFT CHARACTERISTICS

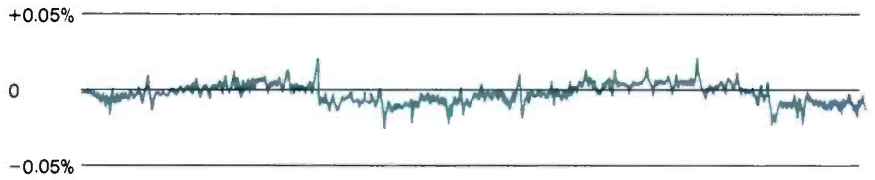


WOW AND FLUTTER CHARACTERISTICS

*McCurdy Radio Industries reserves the right without notice to make such changes in equipment, design, specifications, or components, as progress in engineering or manufacturing techniques may warrant, to improve the performance of the product.*

Printed in Canada SP10MKII DIRECT DRIVE TURNTABLE / ISSUE 1/1.77

McCurdy Radio Industries Limited,
108 Carnforth Road, Toronto, Ontario M4A 2L4 (416) 751-6262 Telex: 06-963533

McCurdy Radio Industries Incorporated, TWX: 610-492-3219
1051 Clinton Street, Buffalo, N.Y. 14206 (716) 854-6700 Telex: 06-963533

U.S.A. East Coast Office,
Saddle River, N.J. P.O. Box 86, 07458 (201) 327-0750

# SS 3159

## stereo disc reproducer

McCurdy

# description & specifications

The SS3159 Stereo Disc Reproducer provides complete facilities for professional stereo reproduction of disc recordings. The SS3159 is completely self-contained with two speed turntable, tone arm, plug-in pickup cartridge, equalized preamplifiers, audio cue switching, and power supply.

The enclosed simplified diagram shows the facilities of the SS3159. The turntable is the Panosonic SP10D Direct Drive Transcription Turntable with speeds of 33⅓ and 45 rpm. The standard tone arm is a Micro Trak 303 utilizing a Stanton 500AL or Shure M44C professional-quality magnetic stereo cartridge. The cartridge output is equalized and amplified by the AT135 preamplifiers which incorporate an input load control (for various types of cartridge) and roll-off selector. The roll-off selector is located on the cue panel and selects either RIAA equalization or variable roll-off from 10 kHz to 16 kHz (see Curve). The roll-off amplitude is variable from zero to 10 dB.

The turntable start system may be set up for local operation by means of the turntable speed selector, or for remote operation by means of a locking or two momentary ON/OFF pushbuttons, lever key, etc. There is also a MOTOR START pushbutton (momentary) for cueing independently of the normal start/stop circuits.

On remote operation, the audio outputs is delayed slightly on turntable start to prevent speed-up 'wow'. This is accomplished by holding the mute relay (K1) energized until the turntable reaches operating speed, after which this relay deenergizes and completes the audio output circuit. The delay is adjustable from 0.2 to 1.5 seconds, approximately.

For instant cueing, a MOTOR START pushbutton and a CUE pushbutton permit bypassing the delay circuit so that the program output is immediately available, as well as the normal cue output. The cue output is taken from a combining network.

An Optional AM275 3 Watt Cue Amplifier may be installed in the SS3159.

The output and cue resistive pads, relay K1, and the power supply regulators are contained on one SM28 plug-in printed-circuit card. This card and the amplifiers plug into a prewired frame-which also contains the power transformer and a connector panel.

The basic cabinet of the SS3159 is finished in textured blue acrylic with wood-grain vinyl overlays applied at points of extra wear such as the control panel and end bells. The top is of laminated formica, ivory in color, with a tinted plexiglas guard at the rear to help prevent accidental displacement of the tone arm. All audio and control connections are accessible at the front of the unit, and are made via connectors which are provided as standard equipment (audio connectors are Cannon XLR types).

## SPECIFICATIONS

### TURNTABLE

(1) **Type:** Panasonic SP-10-D, direct drive.
(2) **Speed Ranges:** 33⅓ and 45 RPM.
(3) **Speed Regulation:** With varying load better than .15%.
(4) **Variable Pitch Control:** ± 3% on all ranges.
(5) **Wow and Flutter:** Less than .03% RMS.
(6) **Rumble:** Better than
–50 db (DIN A)
–55 dB (IEC B)
–70 dB (DIN B)
(7) **Power Requirements:** 120 V AC, 60 Hz.

### ELECTRONICS ASSEMBLY

(1) **Input Level:** 5 mv nominal.
(2) **Input Loading:** Variable from 10k to 250k.
(3) **Equalization:** RIAA or roll-off at 16 KHz (see Response Curve).
(4) **Frequency Response:**
(a) Without roll-off; within 0.5 dB of RIAA curve from 30 Hz to 10 KHz.
±1 dB of RIAA curve, 10 KHz to 20 KHz.
(b) Roll-off; adjustable from 0 to 10 dB below RIAA response at 16 KHz (see curve).
(5) **Output Levels:**
(a) Program: adjustable –20 to +8 dBm.
(b) Cue: adjustable to +8 dBm.
(6) **Output Impedance:** 600 ohms, balanced.
(7) **Distortion:** Less than 0.5% at +8 dBm output, 30 Hz to 20 KHz, using reverse RIAA input network.
(8) **Power Requirement:** 117 V AC, 60 Hz, single-phase, 50 va approximately.

### MECHANICAL

(1) **Dimensions:** 33¼ in. High (30 in. to top of Formica), 22 in. Wide, 22½ in. Deep. Each end bell (optional) adds ¾ in. to width.
(2) **Finish:** Baked textured acrylic; dark blue, complemented by wood-grain vinyl overlay for added protection at points of abnormal wear.
(3) **Weight:** 195 lbs., approx.

---

## OPTIONAL EQUIPMENT

The following units are available as options:
(1) Special Tone Arm if required by customer; for example, Shure SME3009 or SME3012.
(2) SA10048 End Bells with vinyl overlay (2 req'd).
(3) AM275 Cue Amplifier.

# functional

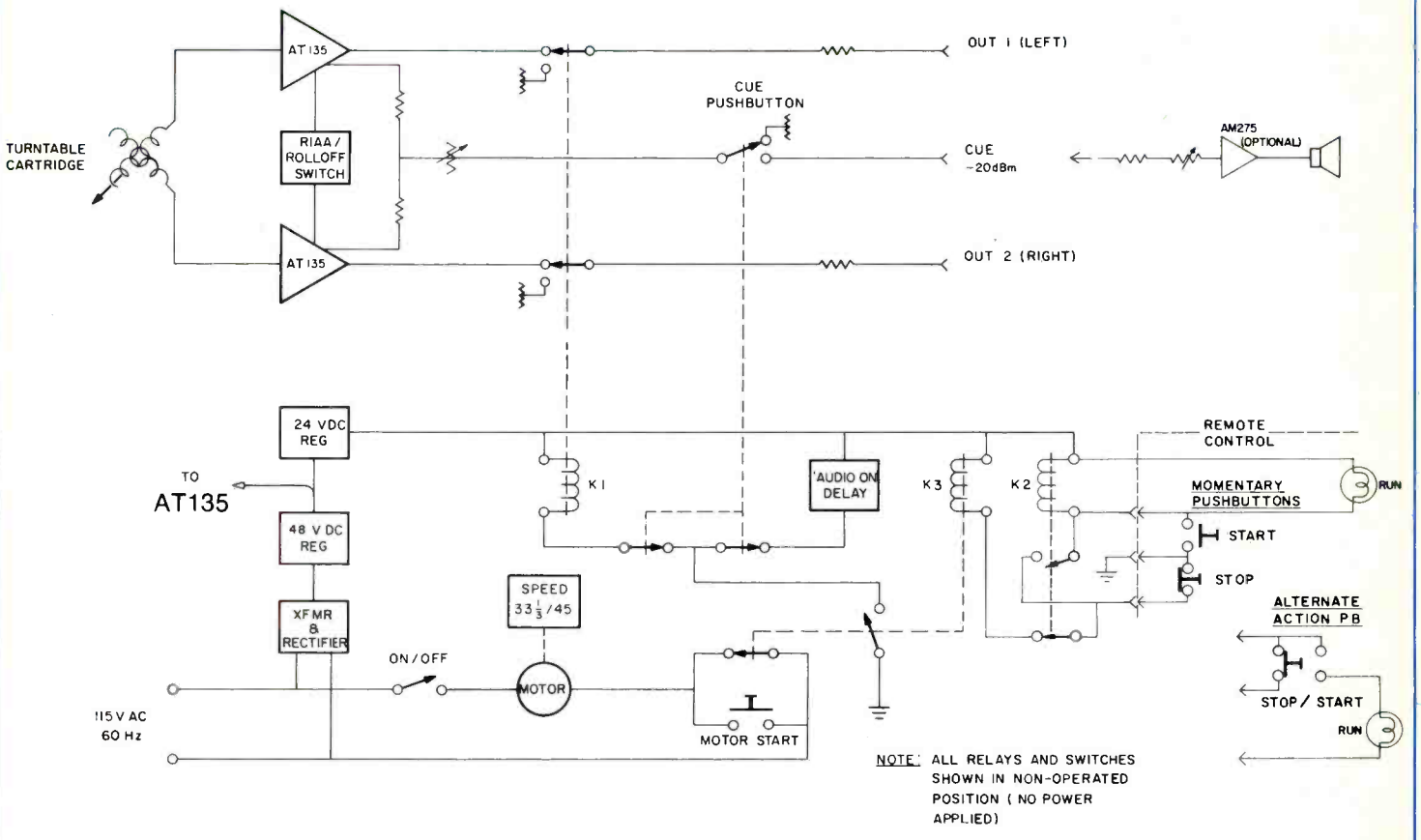


Simplified Schematic of SS3159

Equalization Characteristic of SS3159.

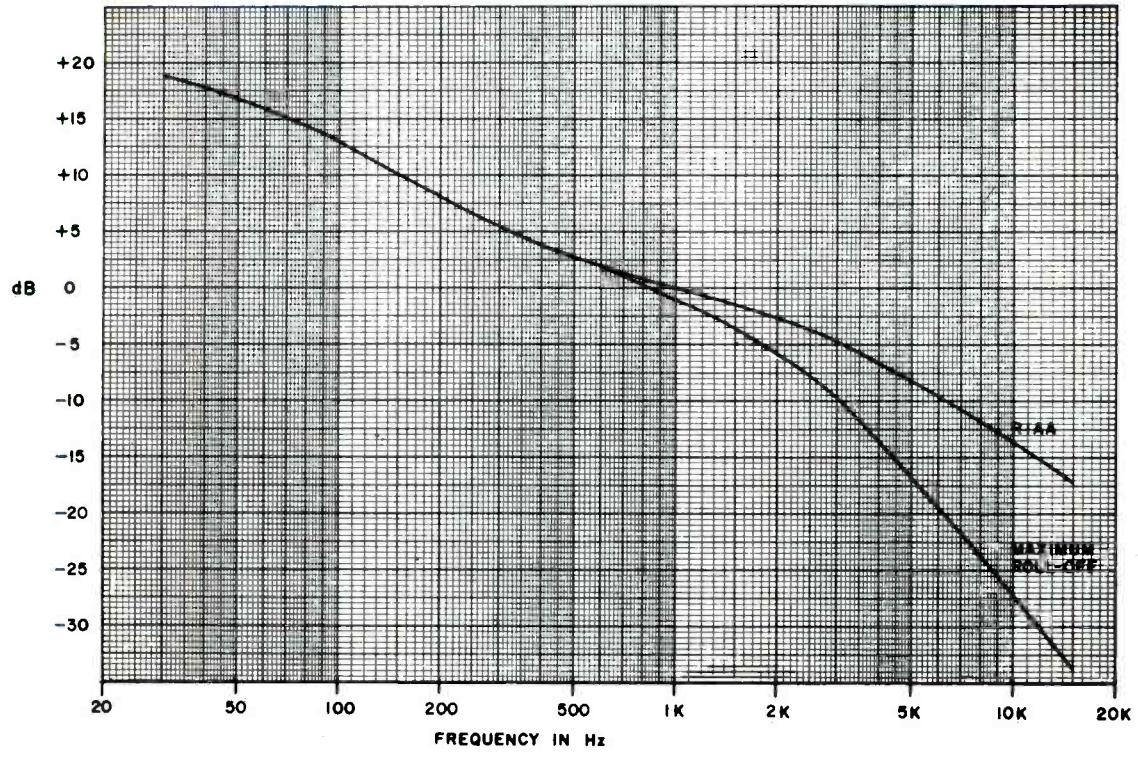

# ordering information

The SS3159 Stereo Disc Reproducer is complete with mating connectors, tone arm, pickup cartridge, arm guard, felt-backed rubber turntable mat, and front and rear blank panels.

The price for the standard SS3159 does not include optional equipment nor the installation of optional equipment.

# installation

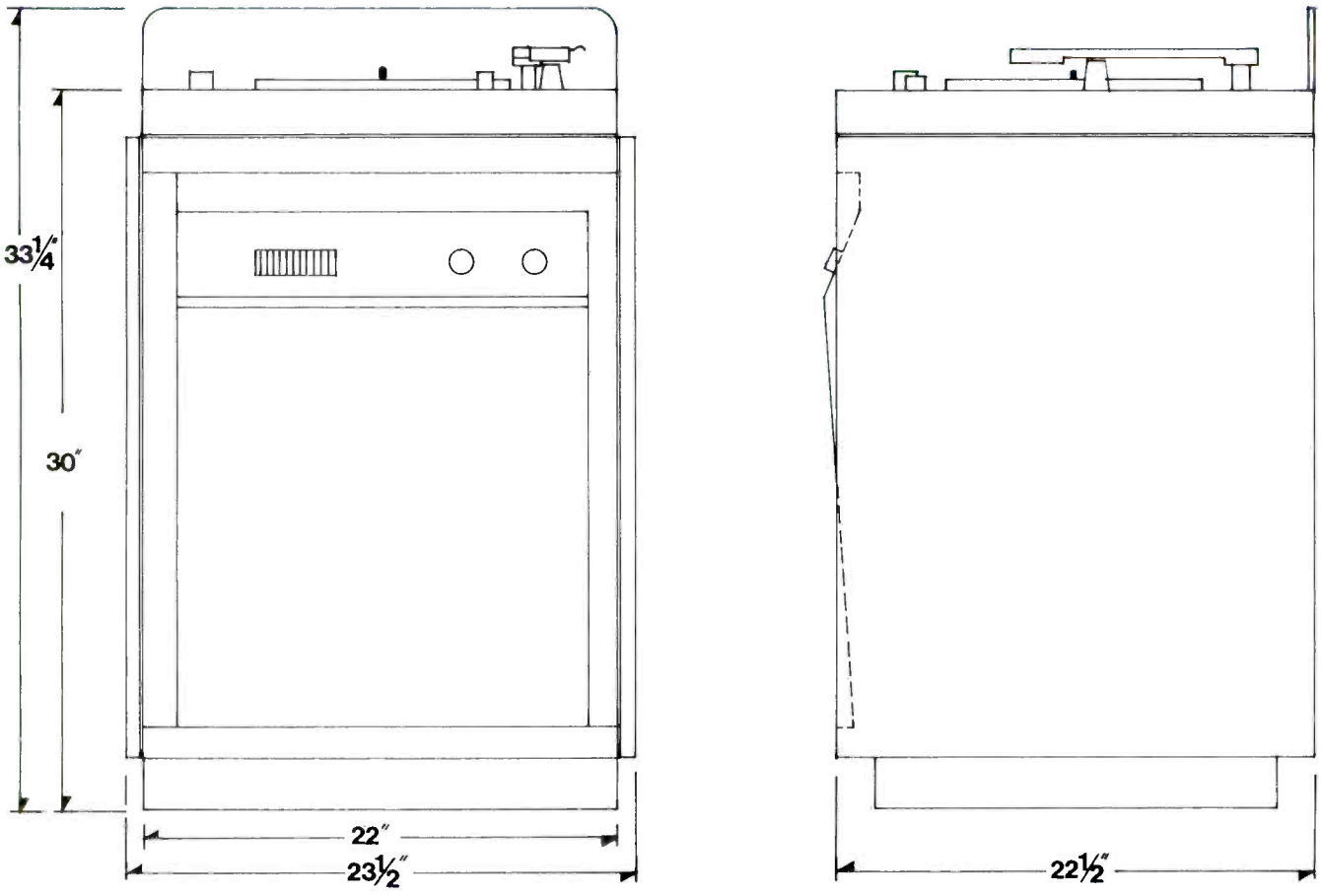


Printed in Canada


**McCURDY RADIO INDUSTRIES LIMITED**
108 CARNFORTH ROAD, TORONTO, ONTARIO M4A 2L4 (416) 751-6262, TELEX: 06-963533

**McCURDY RADIO INDUSTRIES INCORPORATED**
1051 CLINTON STREET, BUFFALO, N.Y. 14206 (716) 854-6700, TWX 610-492-3219

EAST COAST OFFICE: SADDLE RIVER, N.J. P.O. BOX 86, ZIP 07458, PHONE (201) 327-0750, TWX 610-492-3219



McCurdy Radio Industries reserves the right, without notice to make such changes in equipment, design, specifications, or components as progress in engineering or manufacturing techniques may warrant to improve the performance of the product.

# SA10004A
# MOUNTING FRAME

## DESCRIPTION

The SA10004A equipment frame is designed to mount the McCurdy line of 1-3/4 inch plug-in amplifiers and transformer modules in a standard 19-inch EIA rack. The frame is of welded steel, partially-enclosed construction, which results in a lightweight rugged unit providing maximum ventilation.

The plug-in modules slide in between punched guide slots to mate with the connectors at the rear. A front cover, which attaches by means of two captive screws, presents an attractive appearance and carries a designation strip on its inner panel surface. External connections are made at the rear of the frame, which is fitted with a cable support platform. A protective cover is provided for the rear to prevent inadvertent contact with operating voltages.

## SPECIFICATIONS

OVERALL DIMENSIONS

1-3/4 in. (4.45 cm) high, 14-3/4 in. (37.46 cm) deep, 19 in. (48.26 cm) wide.

FINISH

Textured medium blue and iridite.

INSTALLED WEIGHT (less modules)

6 lb (2.72 kg).

## ORDERING INFORMATION

ORDER

SA10004A Mounting Frame
(Includes connectors)

ACCOMMODATES

Up to 12 single-width modules, such as AT240A, MT244, or MT245, each 1-3/16 in. wide (3.02 cm).

Up to 6 double-width modules, such as AT242, each 2-3/8 in. wide (6.03 cm).

Combinations of the above as long as total width does not exceed that of 12 single modules.

McCURDY RADIO INDUSTRIES LIMITED
108 CARNFORTH ROAD — TORONTO 16 — CANADA
(416) 751-6262
TELEX 02-21660

McCURDY RADIO INDUSTRIES INCORPORATED
1051 CLINTON STREET — BUFFALO — N.Y. 14206
(716) 854-6700

# SA10007

# MOUNTING FRAME

## DESCRIPTION

The SA10007 Mounting Frame is designed for mounting in a standard EIA 19-inch rack and occupies 5-1/4 inches of rack space. The unit is of welded open-frame construction to provide adequate ventilation, yet is extremely rigid.

The frame accommodates the MRI series of plug-in modules which slide in between guide rails and mate with the Blue-Ribbon connectors at the rear of the frame. The standard frame is supplied with sufficient guide rails to accommodate eight single-width modules, but these may be rearranged as required to receive any module-width combination within the width required for eight single units.

External connections are made at the rear of the Blue-Ribbon connectors; a solder-terminal strip is also located on a platform at the rear to provide additional tie-points. An MRI accessory mounting tray can be bolted to the rear platform to accommodate relays, filters, etc.

## ORDERING INFORMATION

ORDER: SA10007 Mounting Frame

OPTIONAL ACCESSORY: C4000T/5-19 Accessory Mounting Tray, 2-1/4 in. w by 16-7/8 in. lg.

## SPECIFICATIONS

OVERALL DIMENSIONS
5-1/4 in. h, 15-5/8 in. d, 19 in. w

FINISH
Dark blue metallic

INSTALLED WEIGHT (less modules)
13 lb

ACCOMMODATES
Eight single modules, such as AT305, each 2-1/8 in. wide

Four double modules, such as PS874, each 4-1/4 in. wide

Two quadruple modules, such as AM430, each 8-1/2 in. wide

Any combination of the above, as long as total width does not exceed that of eight single modules.

# SA10100-S

## prewired jackfields

McCurdy

# description

The SA10100S Series of Prewired Jackfields consist of a standard rack mounting strip, containing 24 type 239A tip-ring-sleeve jacks, wired to a terminal block having 5 rows of 24 terminals each. The first four rows terminate the jack springs, with the fifth row strapped vertically and reserved for shield and ground termination. Since all springs are wired to the block, cross-jumpering and circuit changes may be accomplished without soldering directly on the jacks.

A designation strip is included on the jack assembly, and mounting bars for the terminal block are provided as standard equipment. One pair of mounting bars will accommodate four terminal blocks.

Four cable layouts are available; these are used when more than one terminal block is mounted on a set of bars, and are designated SA10100S-1, -2, -3, and -4. (See Cable Layout). In large jackfields, after the -4 block is used, the -1 may be repeated, etc.

A similar jackfield (SA10100) is available with unshielded cable. This should be used only where levels in adjacent cables are the same, so that the danger of crosstalk if minimized.

Accessory patch cords are available in the following lengths:

| Patch Cord No. | Length |
|---|---|
| SA10131 | 12 inches |
| SA10132 | 24 inches |
| SA10133 | 36 inches |
| SA10136 | 72 inches |

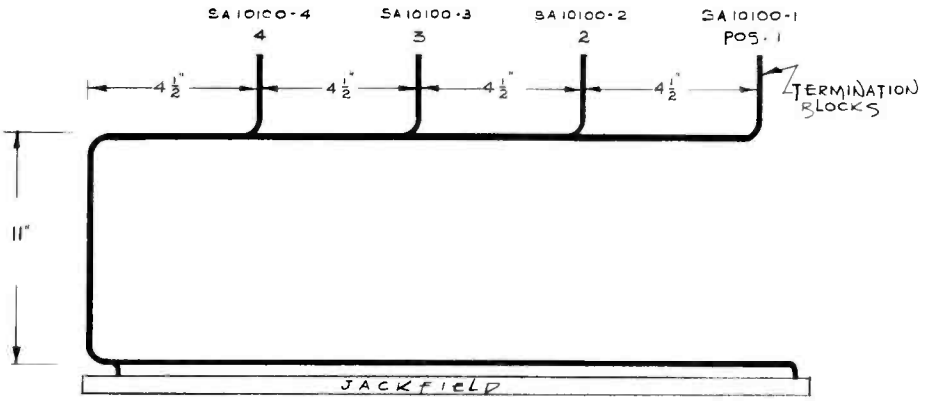


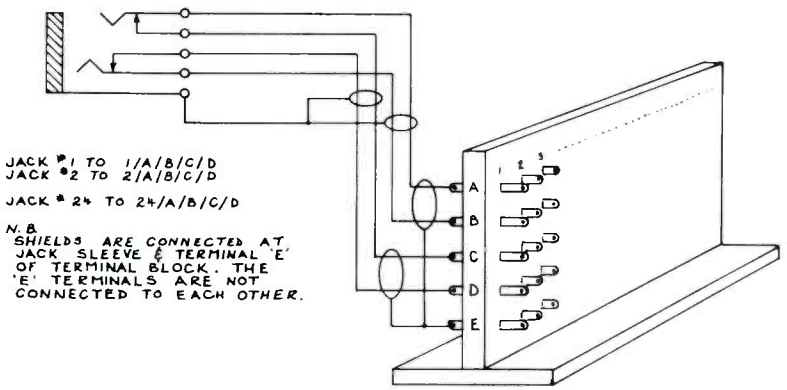



**McCURDY RADIO INDUSTRIES LIMITED**
108 CARNFORTH ROAD, TORONTO, ONTARIO M4A 2L4 (416) 751-6262, TELEX: 06-963533

**McCURDY RADIO INDUSTRIES INCORPORATED**
1051 CLINTON STREET, BUFFALO, N.Y. 14206 (716) 854-6700, TWX 610-492-3219

EAST COAST OFFICE: SADDLE RIVER, N.J. P.O. BOX 86, ZIP 07458, PHONE (201) 327-0750, TWX 610-492-3219



McCurdy Radio Industries reserves the right, without notice to make such changes in equipment, design, specifications, or components as progress in engineering or manufacturing techniques may warrant to improve the performance of the product.

# SA-10100S

# PRE-WIRED JACKFIELD

## DESCRIPTION

The SA-10100S Pre-Wired Shielded Jackfield provides maximum convenience and eliminates time consuming, detailed field wiring to provide rapid, trouble-free installations. The SA-10100S units consist of 24 tip, ring-sleeve jacks wired complete with normals to a standard telephone block. The jackfields (illustrated right) fit standard 19" mounting, and terminal block mounting bars are included with each jackfield.

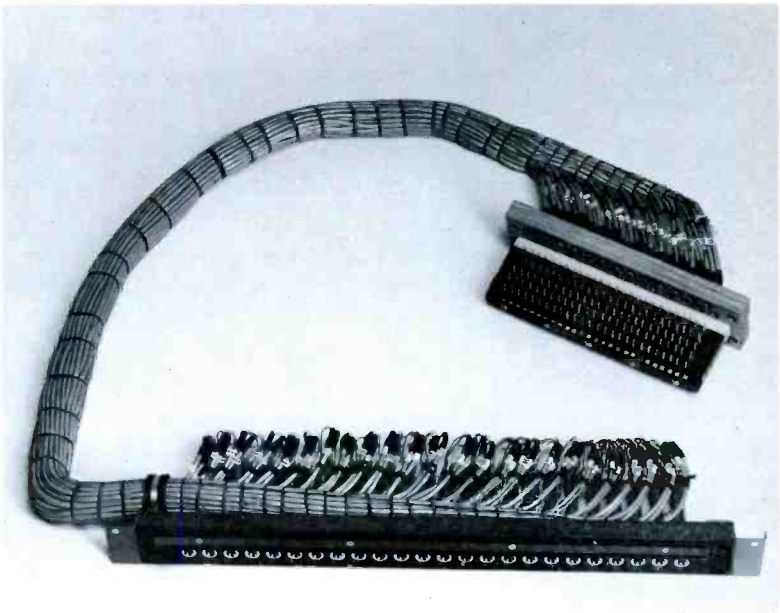

McCurdy Pre-Wired Jackfields are supplied in four positions with tailored cable dress progressively longer to permit the terminal blocks to automatically locate in correct sequence behind the jacks. Where maximum access to the rear of jacks is desired, the jackfield is available with an extra 4-foot length of cable (Model SA-10100S-A). McCurdy also offers shielded patch cords in 2, 3, and 6 foot lengths.

The terminal block supplied is a 26 row "A" block with 5 terminals per row. Terminals are designated A, B, C, D and E. The jack is wired: Tip to terminal A; Ring to terminal B; Tip-spring to terminal C; Ring-spring to terminal D and all sleeves and shields are wired to terminal E.

## ORDERING INFORMATION

SPECIFY: model number of McCurdy Pre-Wired Jackfield (or accessory) desired. When ordering more than one unit for mounting in single rack, please note that positions 1, 2, 3 and 4 indicate progressively longer cable lengths (i.e., Position 4 is longest and 1 is basic unit).

## BASIC PARTS and ACCESSORIES

| | |
|---|---|
| SA-10100S | Pre-Wired 24 Jack Strip wired to 5 x 26 telephone block |
| SA-10100S-A | Same as SA-10100S except with additional 4-ft cable length |
| SA-10102 | Unwired 24-Jack Strip (using 239A Single Jacks) |
| SA-10132 | 2-Foot Shielded Patch Cord (equipped with 310 plugs) |
| SA-10133 | 3-Foot Shielded Patch Cord (equipped with 310 plugs) |
| SA-10136 | 6-Foot Shielded Patch Cord (equipped with 310 plugs) |

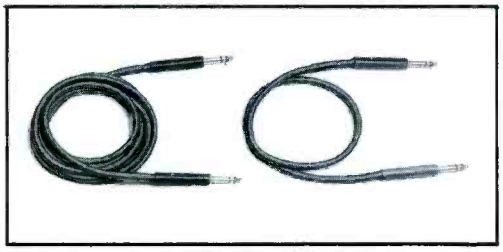

McCURDY RADIO INDUSTRIES INCORPORATED
57 N. PUTNAM ST. ▫ DANVERS ▫ MASS. ▫ 01923
(617) 774-6411

# SA10040 SERIES
# MODULAR ENCLOSURES

## DESCRIPTION

The SA10040 Series of Modular Enclosures provides versatility and convenience in mounting a variety of equipments. Two basic types of enclosure are available; the SA10040 Pedestal and the SA10042 Housing, as shown in Fig. 1 and 3. All enclosures are of rugged steel construction and finished in MRI textured blue. For cable entry, knockouts are provided in the base of each unit, with additional knockouts in the side panels of the SA10042. Since there is no bottom panel in either unit, cabling may also be brought up through the floor.

SA10040 PEDESTAL

The SA10040 pedestal is adaptable to accommodate panel-mounted equipment and a turntable or tape unit. The basic pedestal consists of a rugged framework providing 22-3/4 inches of rack space for 19-inch wide panels (See Fig. 1 and 2). When fitted with one of the adapter tops, the SA10040 matches various MRI console desks both in dimensions and color scheme. The following accessory units are available, as shown in Fig. 2:

Figure 1. SA10040 Pedestal with SA10041 Tape Recorder Adapter.

(1) SA10041 Tape Recorder Adapter. This is a sloped housing which accommodates 19-inch panels and may be used for tape units or control panels (see Fig. 1 and 2). The front of the SA10041 adapter is hinged to the SA10040 pedestal so that it may be tilted forward for servicing. The back of the SA10041 is louvered for ventilation.

(2) SA10045 Turntable Mounting Board. The SA10045 allows mounting an MRI type CH12 turntable (custom cutouts for other types can be made on special order). The mounting board is made of wood laminated with white Formica. The total thickness is 1-5/8 inches to provide optimum damping effect.

McCURDY RADIO INDUSTRIES LIMITED
108 CARNFORTH ROAD — TORONTO 16 — CANADA
(416) 751-6262
TELEX 02-21660

McCURDY RADIO INDUSTRIES INCORPORATED
1051 CLINTON STREET — BUFFALO — N.Y. 14206
(716) 854-6700

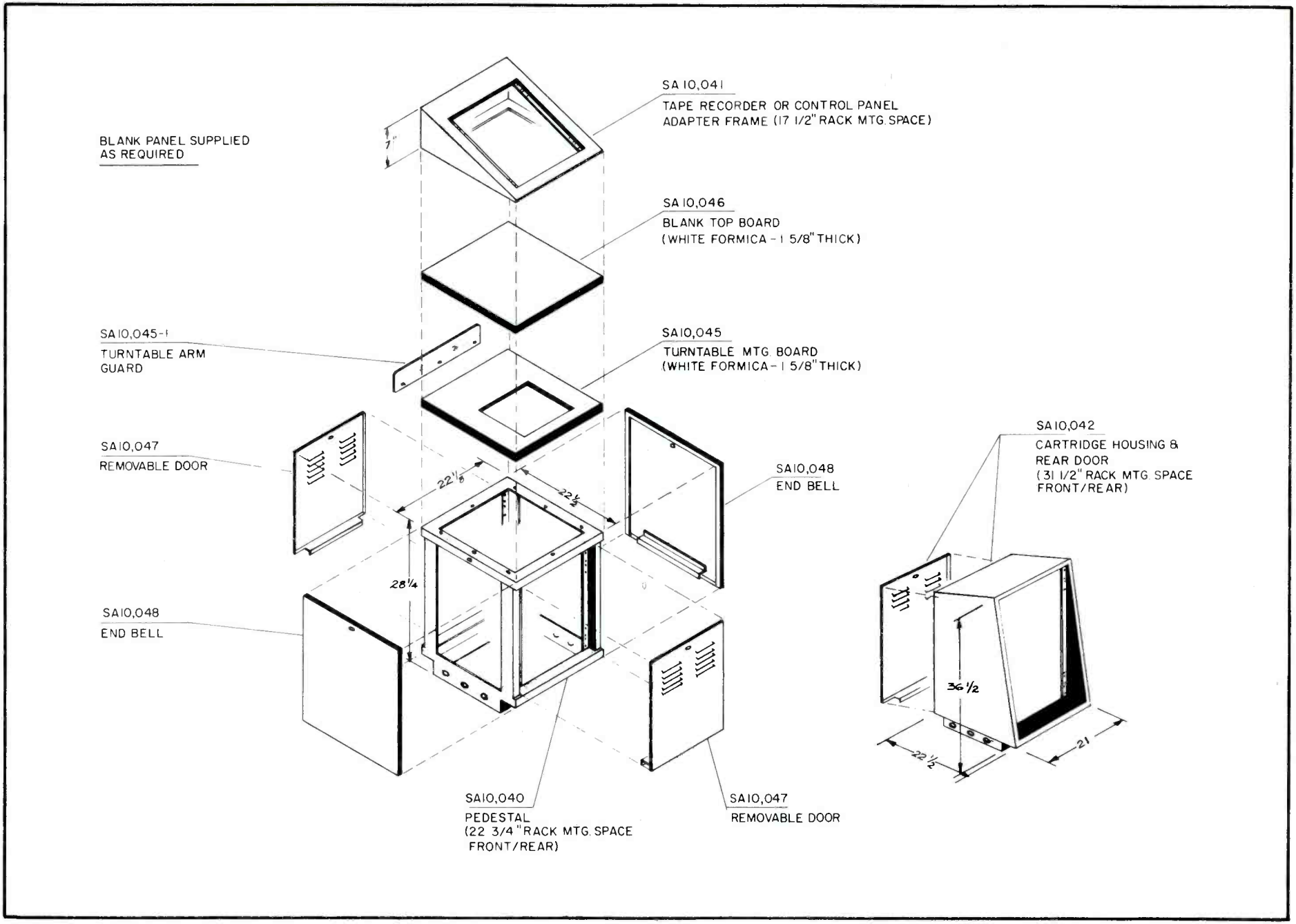


Figure 2. SA10040 Series Modular Enclosures

(3) SA10045-1 Turntable Arm Guard. This guard is made of 1/8-inch anodized aluminum and fits behind the turntable mounting board. It is useful to prevent accidental playback arm displacement.

(4) SA10046 Blank Top. The blank top fits in place of the SA10045 and is constructed of the same materials.

(5) SA10047 Removable Doors. The doors may be used to cover the front and rear of the pedestal, when equipment panels are not used. They are louvered to allow ventilation of the interior. Installation and removal are simplified by the use of a single quick-fastener on each door.

(6) SA10048 End Bells. Used to close the sides of the pedestal when it is not butted against other equipment. Each end bell is secured by one quickfastener.

SA10042 CARTRIDGE TAPE HOUSING

The SA10042 provides 31-1/2 inches of vertical rack space in an attractive sloped-front cabinet. This can be used to house cartridge tape machines or 19-inch equipment panels (See Fig. 3). The panels may be mounted front or rear, but rear mounting will not permit installation of the door; the removable rear door is provided as standard equipment.

Figure 3. SA10042 Cartridge Tape Housing.

BLANK PANELS

Where the 19-inch wide equipment panels do not utilize all the vertical space in the SA10040 or SA10042, it is desirable to fill in empty areas with blank panels. Panels of the following heights are available:

| | |
|---|---|
| SA11021: 1-3/4 in. | SA11025: 8-3/4 in. |
| SA11022: 3-1/2 in. | SA11026: 10-1/2 in. |
| SA11023: 5-1/4 in. | SA11027: 12-1/4 in. |
| SA11024: 7 in. | |

ORDER units and accessories by type number and name.

# SA10410
# SA10420 EQUIPMENT RACKS

## DESCRIPTION

The SA10410 and SA10420 Equipment Racks combine strength and versatility to meet a wide variety of installation requirements. Each type of rack provides 77 inches of vertical mounting space for 19-inch wide panels, the only difference in the two models being the front-to-rear dimension which is 22 inches for the SA10410 and 25-1/2 inches for the SA10420 (see dimensional diagram). The racks are of all-welded construction; the framework is ruggedly formed of 12-gauge C.R. steel to accommodate the heaviest of rack-mounting units, with side panels and doors of 18-gauge steel.

The most outstanding features of these racks are the results of design techniques that achieve flexibility in use:

- Basic rack can be used where side panels or doors not required.
- Side panels and doors easily installed or removed without the use of tools, providing the ultimate in installation ease and equipment accessibility.
- Doors can be mounted front and/or rear, to open from left or right, and can be fitted with locks.
- Mounting angles for equipment panels may be positioned for flush or recess mounting at front or rear, or for attachment to both front and rear of equipment (see detail photo).
- Two or more racks may be bolted together for perfectly-aligned multiple installations. Specially-formed crossbraces with welded spacers ensure positive joins without danger of distortion.

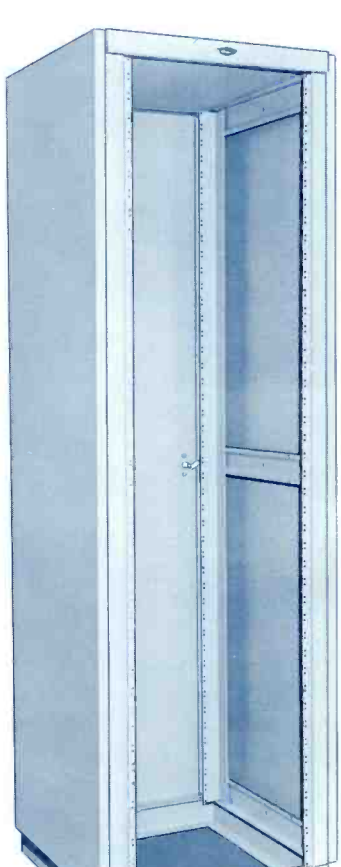

Ventilation by convection may be provided by a perforated top panel which is available as an optional extra. Included as standard equipment is a full-length plugmold strip, with twelve ac outlets, through which ac power can be supplied to the rack-mounted units. In addition, a convenience outlet is installed at the bottom front of the rack for test equipment, etc.

Installation dimensions are shown in the dimensional diagram. The weight of the basic framework is 110 lb.; add 32 lb. for each side panel and 30 lb. for each door required. A complete line of blank panels from 1-3/4 inches to 12 inches is available (see Catalog Price List). The standard rack finish is blue vinyl, but other finishes are available on request.

McCURDY

McCURDY RADIO INDUSTRIES LIMITED
108 CARNFORTH ROAD TORONTO ONTARIO M4A 2L4
(416) 751-6262
TELEX 02-21660

McCURDY RADIO INDUSTRIES INCORPORATED
1051 CLINTON STREET BUFFALO N.Y. 14206
(716) 854-6700

The height of 77 inches provides for 44 rack units (a rack unit = 1-3/4 inches); the mounting holes are spaced to accommodate any combination of one-unit panels and multiples thereof.

Each side panel adds 1 inch to the width of the basic rack; each door adds 1-1/4 inch not including the handle, which protrudes another 1-5/8 inch.

The rack may be fastened to the floor by means of the four mounting holes provided in the base flange, if desired. The recommended fasteners are 3/8-inch by 4-inch lag screws. However, the rack is adequately stable for normal stationary installations without bolting down.

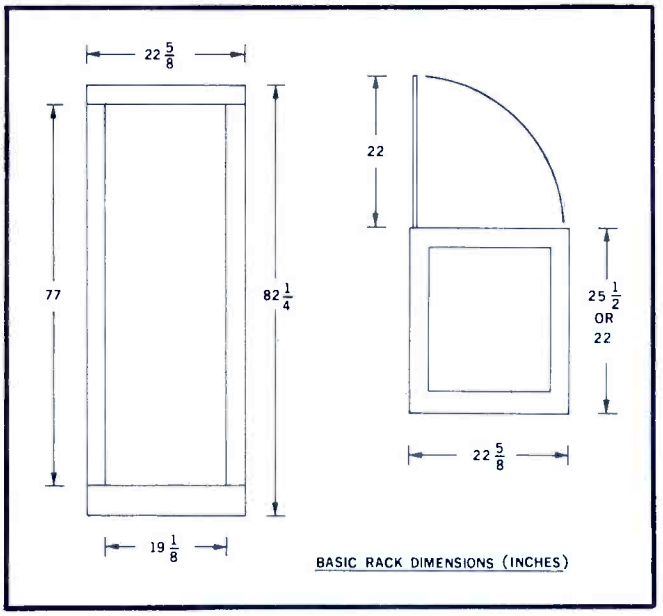

BASIC RACK DIMENSIONS (INCHES)

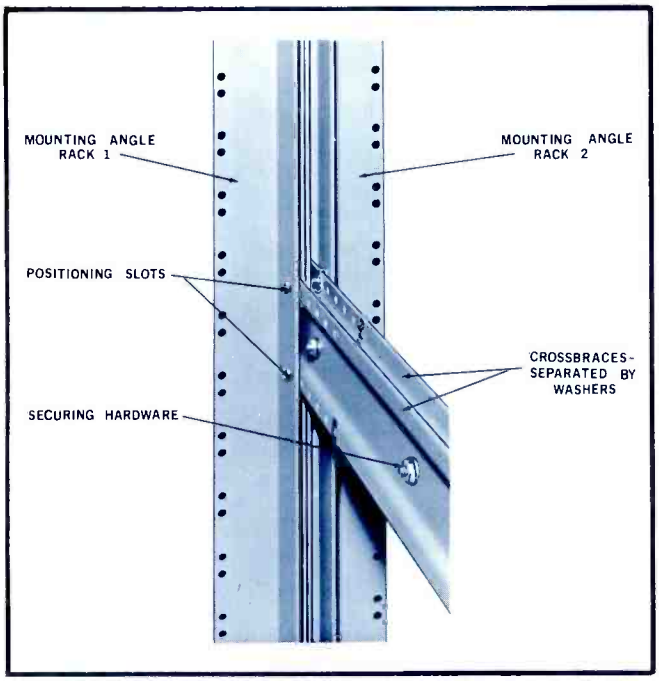


Shown here are two racks bolted together; the units are joined at all three crossbraces although only one join is shown here. The welded-on, 1/8-inch thick washers take the full stress of assembly and keep the strain off structural members, thereby ensuring a rigid, positive join without any distortion of framework, panels, etc.

The mounting angles may be positioned anywhere from extreme front and rear to center. However, where a door is installed, 1/2 inch allowance must be made for the door closing. Also, if the equipment next to the door has knobs or other protrusions, further allowance must be made for these.

No. 12-24 speednuts and bolts are provided for simple, easy installation of the angles to any of the holes in the crossbraces. In addition to this positioning, the mating cutouts in the angles are 1-inch slots to permit exact positioning.

## ORDERING INFORMATION

ORDER

SA10410 Equipment Rack (22 in. deep)
OR
SA10420 Equipment Rack (25-1/2 in. deep)

(All hardware included).

OPTIONAL ACCESSORIES

See Catalog Price List for:
(1) Side panels
(2) Doors
(3) Rack Top
(4) Blank panels

*McCurdy Radio Industries reserves the right, without notice, to make such changes in equipment, design, specifications, or components as progress in engineering or manufacturing techniques may warrant to improve the performance of the product.*

# SA10410
# SA10420 EQUIPMENT RACKS

## DESCRIPTION

The SA10410 and SA10420 Equipment Racks combine strength and versatility to meet a wide variety of installation requirements. Each type of rack provides 77 inches of vertical mounting space for 19-inch wide panels, the only difference in the two models being the front-to-rear dimension which is 22 inches for the SA10410 and 25-1/2 inches for the SA10420 (see dimensional diagram). The racks are of all-welded construction; the framework is ruggedly formed of 12-gauge C.R. steel to accommodate the heaviest of rack-mounting units, with side panels and doors of 18-gauge steel.

The most outstanding features of these racks are the results of design techniques that achieve flexibility in use:

- Basic rack can be used where side panels or doors not required.
- Side panels and doors easily installed or removed without the use of tools, providing the ultimate in installation ease and equipment accessibility.
- Doors can be mounted front and/or rear, to open from left or right, and can be fitted with locks.
- Mounting angles for equipment panels may be positioned for flush or recess mounting at front or rear, or for attachment to both front and rear of equipment (see detail photo).
- Two or more racks may be bolted together for perfectly-aligned multiple installations. Specially-formed crossbraces with welded spacers ensure positive joins without danger of distortion.

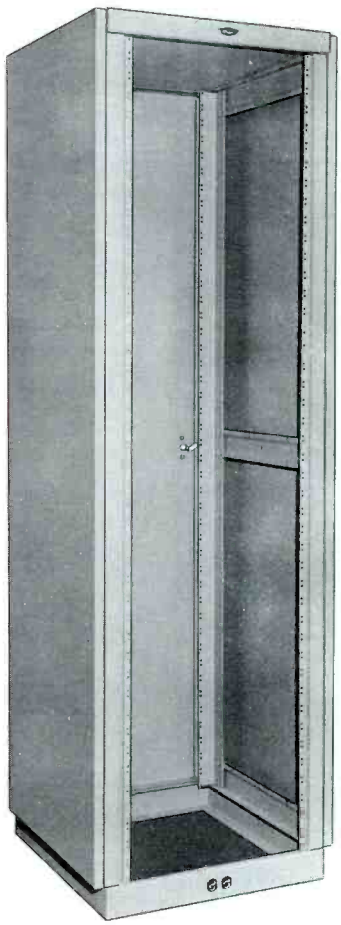

Ventilation by convection may be provided by a perforated top panel which is available as an optional extra. Included as standard equipment is a full-length plugmold strip, with twelve ac outlets, through which ac power can be supplied to the rack-mounted units. In addition, a convenience outlet is installed at the bottom front of the rack for test equipment, etc.

Installation dimensions are shown in the dimensional diagram. The weight of the basic framework is 110 lb.; add 32 lb. for each side panel and 30 lb. for each door required. A complete line of blank panels from 1-3/4 inches to 12 inches is available (see Catalog Price List). The standard rack finish is blue vinyl, but other finishes are available on request.

The height of 77 inches provides for 44 rack units (a rack unit = 1-3/4 inches); the mounting holes are spaced to accommodate any combination of one-unit panels and multiples thereof.

Each side panel adds 1 inch to the width of the basic rack; each door adds 1-1/4 inch not including the handle, which protrudes another 1-5/8 inch.

The rack may be fastened to the floor by means of the four mounting holes provided in the base flange, if desired. The recommended fasteners are 3/8-inch by 4-inch lag screws. However, the rack is adequately stable for normal stationary installations without bolting down.

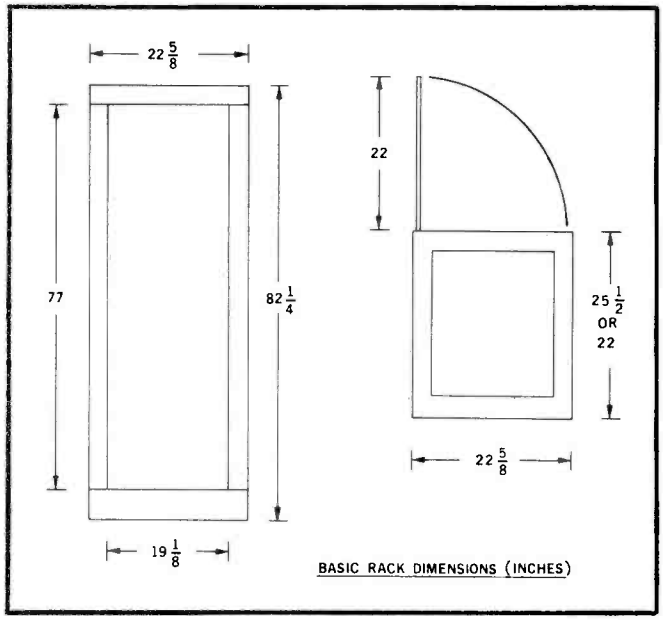

BASIC RACK DIMENSIONS (INCHES)

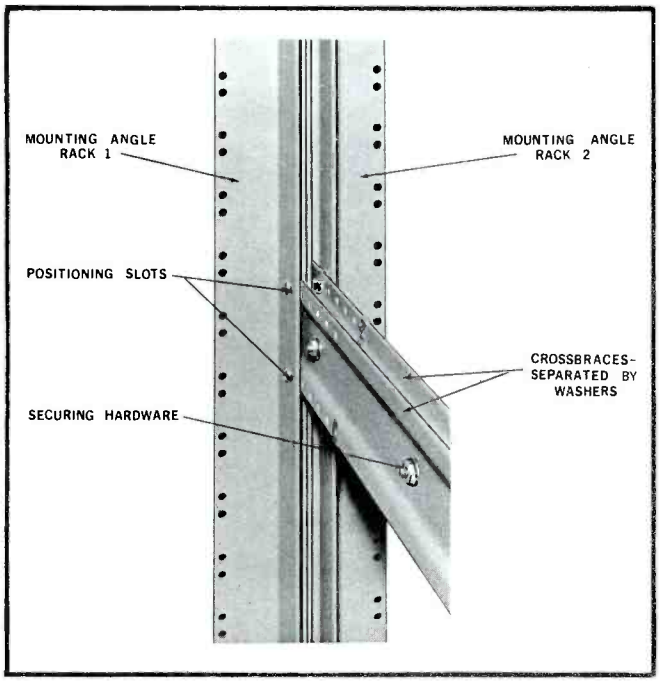


Shown here are two racks bolted together; the units are joined at all three crossbraces although only one join is shown here. The welded-on, 1/8-inch thick washers take the full stress of assembly and keep the strain off structural members, thereby ensuring a rigid, positive join without any distortion of framework, panels, etc.

The mounting angles may be positioned anywhere from extreme front and rear to center. However, where a door is installed, 1/2 inch allowance must be made for the door closing. Also, if the equipment next to the door has knobs or other protrusions, further allowance must be made for these.

No. 12-24 speednuts and bolts are provided for simple, easy installation of the angles to any of the holes in the crossbraces. In addition to this positioning, the mating cutouts in the angles are 1-inch slots to permit exact positioning.

## ORDERING INFORMATION

ORDER

SA10410 Equipment Rack (22 in. deep)
OR
SA10420 Equipment Rack (25-1/2 in. deep)

(All hardware included).

OPTIONAL ACCESSORIES

See Catalog Price List for:
(1) Side panels
(2) Doors
(3) Rack Top
(4) Blank panels

# SA10044

## modular enclosure

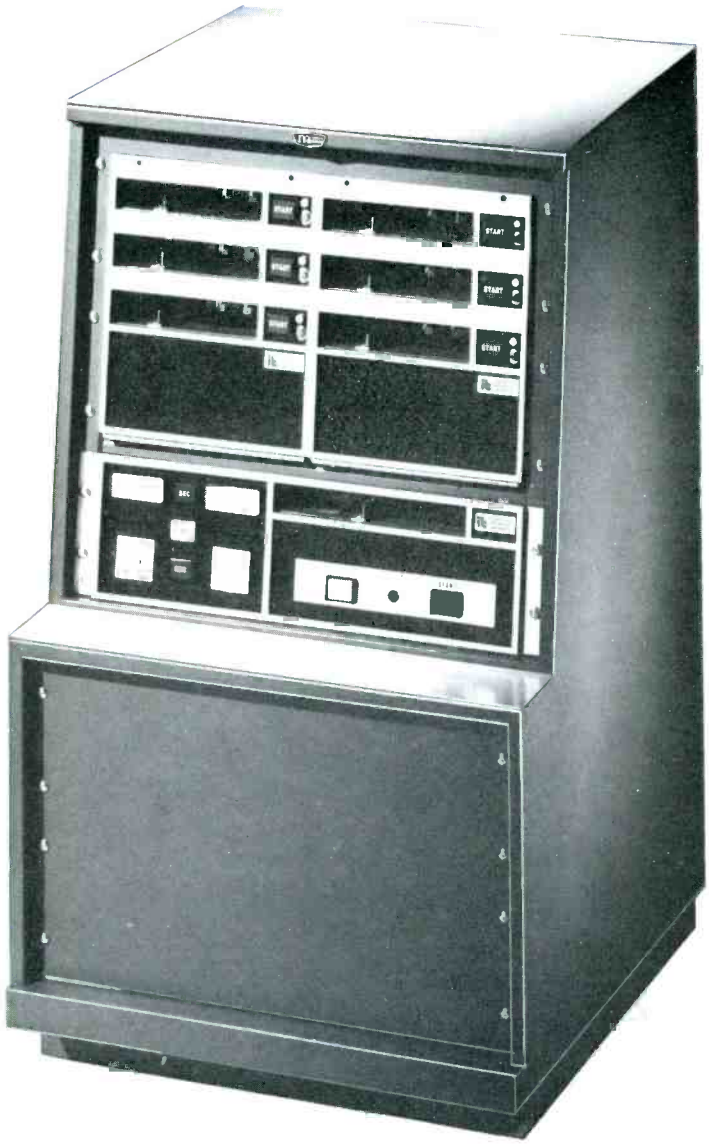

McCurdy

# description & specifications

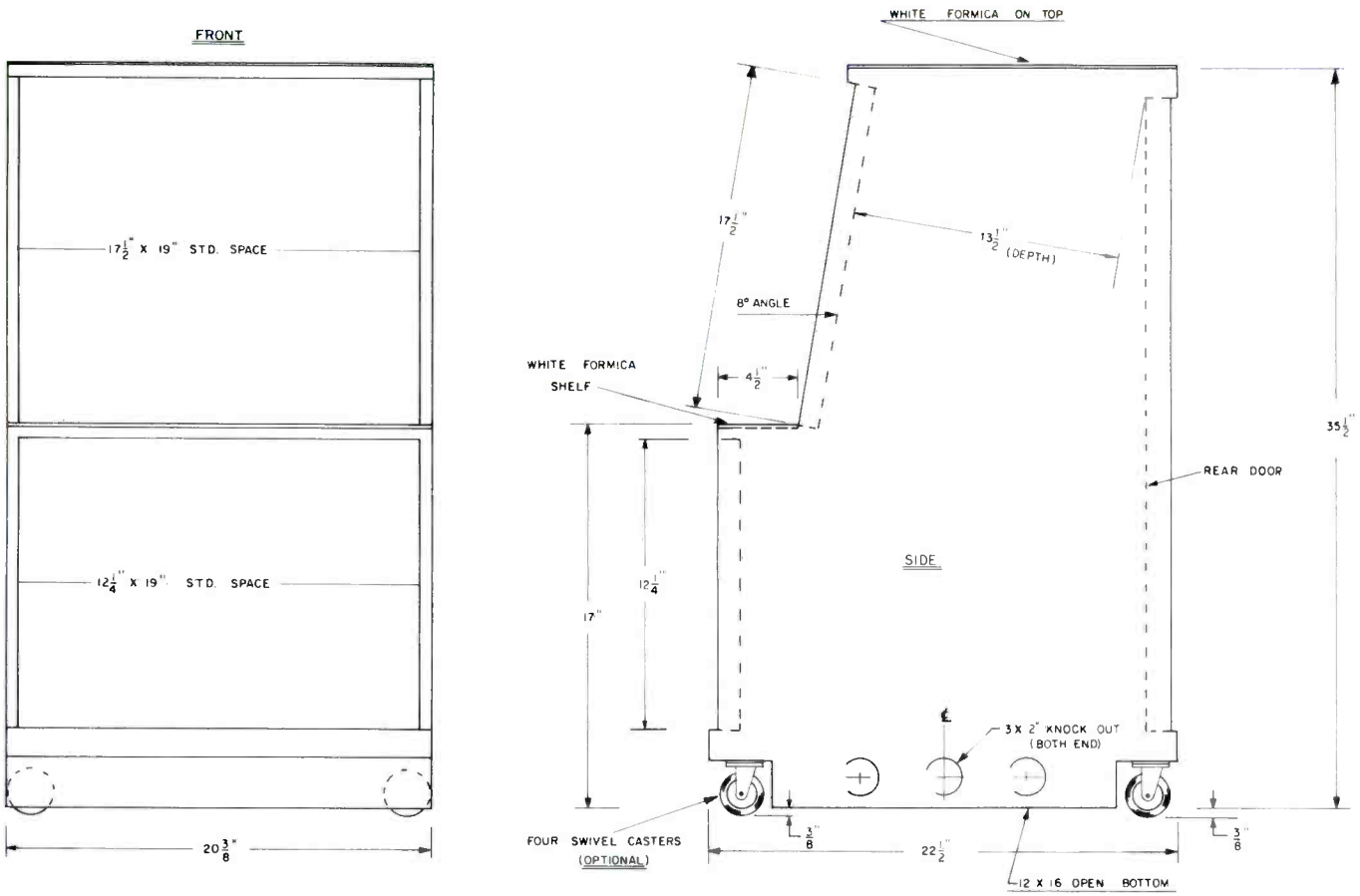


The SA10044 is another in the Series of Modular Enclosures providing versatility and convenience for mounting a variety of equipment. Designed specifically for cartridge tape machines, several different mounting arrangements may be chosen to place equipment in a convenient operating position while maintaining an all over attractive appearance. 17½-Inches of rack space for 19-inch panels is provided in the top section at an 10° angle, 12¼-inches is available at the bottom. These enclosures are of rugged steel construction and finished in MRI textured blue. For cable entry, knockouts are provided in the base of the unit. Since there is no bottom panel, cabling may also be brought up through the floor. The SA10044 auxiliary housing comes complete with panel mounting hardware and a rear door.

## ACCESSORIES

Where the 19-inch wide equipment panels do not utilize all the vertical space in the SA10044, it is desirable to fill in empty areas with blank panels. Panels of the following heights are available:

SA11021: 1¾ in.
SA11022: 3½ in.
SA11023: 5¼ in.
SA11024: 7 inches.
SA11025: 8¾ in.
SA11026: 10½ in.
SA11027: 12¼ in.

ORDER units and accessories by type number and name.



Printed in Canada

**McCURDY RADIO INDUSTRIES LIMITED**
108 CARNFORTH ROAD. TORONTO. ONTARIO M4A 2L4 (416) 751-6262. TELEX 06-963533, TWX 610-492-1373
**McCURDY RADIO INDUSTRIES INC.**
UNITED STATES HEAD OFFICE
1711 CARMEN DRIVE, ELK GROVE VILLAGE, ILLINOIS 60007, (312) 640-7077, TWX 910-222-0436
EAST COAST OFFICE
223 WEST SADDLE RIVER ROAD, SADDLE RIVER, N.J. 07458, (201) 327-0750, TWX 710-988-2254
BUFFALO WAREHOUSE
1051 CLINTON STREET, BUFFALO, N.Y. 14206, DIRECT LINE TO TORONTO PLANT (716) 854-6700, TWX 610-492-1373

McCurdy Radio Industries reserves the right, without notice to make such changes in equipment, design, specifications, or components as progress in engineering or manufacturing techniques may warrant to improve the performance of the product.

# SA14021A

# extended-range audio level meter

McCurdy

# description & specifications

The SA14021A Extended-Range Audio Level Meter is a self-contained, solid-state instrument designed for the measurement of audio system transmission levels in dbm. The SA14021A can accommodate audio input levels from -50 dbm to +30 dbm (sine wave) with zero meter reading. A front panel switch selects two ranges, -50 dbm to +10 dbm and -30 dbm to +30 dbm, and a calibrated attenuator provides fine selection in 2 db steps within these ranges.

Two balanced inputs are provided, one for 600 ohms matching and the other for 20,000 ohms bridging. A high impedance output permits monitoring by headset without affecting the meter reading.

An amplifier and a power supply circuit are mounted on printed-circuit boards inside the instrument cabinet. These circuits are all solid-state, with silicon devices used throughout for maximum reliability. The cabinet is designed for standard 19-inch rack mounting and occupies only 5-1/4 inches of rackheight. The front panel hinges forward to permit access to internal components and mounts the operating controls, input and monitoring jacks, and a 4-1/2 inch meter.

External power connections are made by plugging the line cord into the required ac source. A terminal board is mounted on the rear of the unit for making extension connections to remote jacks if desired.

**Range:** Two ranges, in 2 db steps, for zero indication:
(1) -50 to +10 dbm
(2) -30 to +30 dbm

**Input Impedance:**
(1) 600 ohms matching, balanced, 10%
(2) 20,000 ohms bridging, balanced

**Frequency Response:** Within 0.5 db, 20 hz to 20 khz

**Distortion:** (at +30 dbm input):
(1) Less than 1%, 50 hz to 15 khz
(2) Less than 1.5% 20 hz to 20 khz

**Signal-to-noise ratio:** Better than 40 db below any full-scale reading

**Attenuator Tracking:** Within 0.25 db per step (non-accumulative)

**Meter Ballistics:** Complies with audio level meter standards

**Monitor Output:** 0.15 volt into 20,000-ohm headset

**Power Requirements:**
105 to 125 v/210 to 230 v ac,
50/60 hz, single phase,
5 va approx

**Dimensions:** 5-1/4 in. (13.33 cm) high, 5-1/4 in. (13.33 cm) deep, 19 in (48.26 cm) wide

**Weight:**
(1) Shipping: 15 lb (6.8 kg) (2) Installed: 13 lb (5.9 kg)

# ordering information

ORDER

SA14021A Extended-Range Audio Level Meter; specify line voltage and frequency

ACCESSORIES (not supplied)

(1) SA10132 two-foot patch cord
(2) SA10133 three-foot patch cord
(3) SA10136 six-foot patch cord

**McCURDY RADIO INDUSTRIES LIMITED**
108 CARNFORTH ROAD, TORONTO, ONTARIO M4A 2L4 (416) 751-6262, TELEX: 06-963533

**McCURDY RADIO INDUSTRIES INCORPORATED**
1051 CLINTON STREET, BUFFALO, N.Y. 14206 (716) 854-6700, TWX 610-492-3219

EAST COAST OFFICE: SADDLE RIVER, N.J. P.O. BOX 86, ZIP 07458, PHONE (201) 327-0750, TWX 610-492-3219

McCurdy Radio Industries reserves the right, without notice to make such changes in equipment, design, specifications, or components as progress in engineering or manufacturing techniques may warrant to improve the performance of the product.

# SA14021A EXTENDED-RANGE AUDIO LEVEL METER

## DESCRIPTION

The SA14021A Extended-Range Audio Level Meter is a self-contained, solid-state instrument designed for the measurement of audio system transmission levels in dbm. The SA14021A can accommodate audio input levels from -50 dbm to +30 dbm (sine wave) with zero meter reading. A front panel switch selects two ranges, -50 dbm to +10 dbm and -30 dbm to +30 dbm, and a calibrated attenuator provides fine selection in 2 db steps within these ranges.

Two balanced inputs are provided, one for 600 ohms matching and the other for 20,000 ohms bridging. A high impedance output permits monitoring by headset without affecting the meter reading.

An amplifier and a power supply circuit are mounted on printed-circuit boards inside the instrument cabinet. These circuits are all solid-state, with silicon devices used throughout for maximum reliability. The cabinet is designed for standard 19-inch rack mounting and occupies only 5-1/4 inches of rack height. The front panel hinges forward to permit access to internal components and mounts the operating controls, input and monitoring jacks, and a 4-1/2 inch meter.

External power connections are made by plugging the line cord into the required ac source. A terminal board is mounted on the rear of the unit for making extension connections to remote jacks if desired.

McCURDY RADIO INDUSTRIES LIMITED
108 CARNFORTH ROAD — TORONTO 16 — CANADA
(416) 751-6262
TELEX 02-21660
1051 CLINTON STREET — BUFFALO — N.Y. 14206
(716) 854-6700
McCURDY RADIO INDUSTRIES INCORPORATED

# SPECIFICATIONS

RANGE

Two ranges, in 2 db steps, for zero indication:

(1) -50 to +10 dbm
(2) -30 to +30 dbm

INPUT IMPEDANCE

(1) 600 ohms matching, balanced, ±10%
(2) 20,000 ohms bridging, balanced

FREQUENCY RESPONSE

Within ±0.5 db, 20 hz to 20 khz

DISTORTION (at +30 dbm input)

(1) Less than 1%, 50 hz to 15 khz
(2) Less than 1.5% 20 hz to 20 khz

SIGNAL-TO-NOISE RATIO

Better than 40 db below any full-scale reading

ATTENUATOR TRACKING

Within ±0.25 db per step
(non-accumulative)

METER BALLISTICS

Complies with audio level meter standards

MONITOR OUTPUT

0.15 volt into 20,000-ohm headset

POWER REQUIREMENTS

105 to 125 v/210 to 230 v ac,
50/60 hz, single phase,
5 va approx

DIMENSIONS

5-1/4 in. (13.33 cm) high, 5-1/4 in. (13.33 cm) deep, 19 in (48.26 cm) wide

WEIGHT

(1) Shipping: 15 lb (6.8 kg)
(2) Installed: 13 lb (5.9 kg)

# ORDERING INFORMATION

ORDER

SA14021A Extended-Range Audio Level Meter;
specify line voltage and frequency

ACCESSORIES (not supplied)

(1) SA10132 two-foot patch cord
(2) SA10133 three-foot patch cord
(3) SA10136 six-foot patch cord

*McCurdy Radio Industries reserves the right, without notice, to make such changes in equipment, design, specifications, or components as progress in engineering or manufacturing techniques may warrant to improve the performance of the product.*

aristocart

# stereo cartridge tapes

A MUST FOR STEREO OPERATIONS

McCurdy

# description

Through remarkable new design achievements, Aristocart cartridge tapes approach the performance and fidelity of reel-to-reel equipment.
Aristocarts meet or exceed all applicable NAB Specifications.
Consistent phase relationship ensures complete mono/stereo compatibility (maximum loss is less than 3 dB at 12 kHz).
Wow and flutter are minimized by a unique design in which part of the tape acts as a mechanical filter.
A new guide arrangement reduces strain and wear, thus greatly increasing tape and transducer life.

Guide design and careful assembly procedures also help to maintain the special uniformity characteristic between Aristocart cartridges.
Mounted in Lexan shatterproof housing.

Also available are optically-aligned sweep frequency alignment cartridges with rapid sweep from 50 Hz to 15 kHz.

***The amazing new Aristocart Cartridge Tapes are now wound and distributed by McCurdy Radio Industries.**

# unit price

| | loaded | | | empty | |
|---|---|---|---|---|---|
| TIME | 1-99 | 100-249 | 250-499 | | |
| 20 sec. | $3.45 | $3.25 | $3.00 | 1- 99 | 2.90 |
| 40 sec. | 3.30 | 3.25 | 3.05 | 100-249 | 2.70 |
| 63 sec. | 3.60 | 3.40 | 3.15 | 250-499 | 2.50 |
| 70 sec. | 3.60 | 3.40 | 3.15 | 500-999 | 2.40 |
| 100 sec. | 3.70 | 3.50 | 3.25 | 1000-up | 2.30 |
| 2½ min. | 3.80 | 3.55 | 3.35 | | |
| 3½ min. | 4.00 | 3.75 | 3.50 | | |
| 4½ min. | 4.05 | 3.90 | 3.65 | | |
| 5½ min. | 4.15 | 4.05 | 3.80 | | |
| 7½ min. | 4.65 | 4.35 | 4.10 | | |
| 8½ min. | 4.80 | 4.50 | 4.25 | | |
| 10 min. | 5.00 | 4.70 | 4.40 | | |

For other times use price of next highest time given.

Sizes may be assorted for quantity pricing.

Alignment cartridge sweeps frequencies from 50 Hz to 15 kHz.

**5% Discount on 250-499 price for quantities of 500 to 999**

**10% Discount on 250-499 price for quantities of 1000 up**

Printed in Canada

McCURDY RADIO INDUSTRIES INCORPORATED
1051 CLINTON STREET, BUFFALO, N.Y. 14206 (716) 854-6700

McCurdy Radio Industries reserves the right, without notice to make such changes in equipment, design, specifications, or components as progress in engineering or manufacturing techniques may warrant to improve the performance of the product.

# McCurdy

# price list effective february 1979

SUPERSEDES PRICE LIST OF FEBRUARY, 1978

**McCURDY RADIO INDUSTRIES INC.**
UNITED STATES HEAD OFFICE
1711 CARMEN DRIVE, ELK GROVE VILLAGE, ILLINOIS 60007
(312) 640-7077 TWX 910-222-0436
EAST COAST OFFICE
223 WEST SADDLE RIVER ROAD, SADDLE RIVER, N.J. 07458
(201) 327-0750 TWX 710-988-2254

**McCURDY RADIO INDUSTRIES LIMITED**
108 CARNFORTH ROAD, TORONTO, ONTARIO M4A 2L4
(416) 751-6262 TELEX 06-963533, TWX 610-492-1373

**State and Local Taxes excluded.**

**Prices shown F.O.B. Plant**

**Shipping by Surface Freight unless otherwise specified.**

**Prices Subject to Change without notice.**

| model | description | unit price |
|---|---|---|
| | **TURNTABLES AND ACCESSORIES** | |
| SS3159 | Stereo Disc Reproducer, with Cabinet, Electronics and SPI0MK II Turntable (Less End Bells and Cartridge) | 3,135.00 |
| SPI0MK II | Ultra-Fidelity Direct Drive Turntable without Tone Arm | 900.00 |
| SH-10B3 | Base for SP-10MK II | 350.00 |
| SL-1000MK II | Quartz Controlled Direct Drive Turntable with Titanium Tone Arm and Obsidian Base | 1,400.00 |
| SL-1500MK II | Ultra-Fidelity Direct Drive Turntable with Tone Arm | 390.00 |
| AT235 | Equalized Phono Preamplifier; -20 to +8 dBm, 600 OHMS | 215.00 |
| SA236-P2 | Stereo Phono Preamp. Package c/w Housing, Power Supply and Two AT235 Preamps | 600.00 |
| AM275 | 3 Watt Cue Amplifier for SS3159 Turntable Assembly | 165.00 |
| TM40-12FR | 12" Felt/Rubber Mat for Turntables | 20.00 |
| SA10048 | End Bell (2 required) for SS3159 Turntable | 35.00 |
| SA10545 | 45 RPM Adapter | 2.00 |
| S220 | Syntec 12" Tone Arm | 85.00 |
| 881-S | Stanton Cartridge; 1 Gram Tracking | 90.00 |
| D81 | Stylus for 881-S Cartridge | 45.00 |
| D681EEE | Stanton Cartridge; ¾ to 1½" Gram Tracking | 54.00 |
| D6800EEE | Stylus for 681EEE Cartridge | 27.00 |
| 681SE | Stanton Cartridge; 2 to 4 Grams Tracking Force | 43.20 |
| D6800SE | Stylus for 681SE Cartridge | 19.40 |
| 500AL | Stanton Cartridge; 3 to 7 Gram Tracking | 15.00 |
| D5107AL | Stylus for 500AL Cartridge | 7.20 |

| model | description | unit price |
|---|---|---|
| | **SYSTEM AMPLIFIERS** | |
| AT249 | Distribution Amplifier (Six Outputs) | 195.00 |
| AT284 | Console Mic Preamplifier; -60 dBm | 100.00 |
| AT284A | Console Mic Preamplifier; -70 dBm | 125.00 |
| AT285 | Console Matching Input Module; -20 dBm | 100.00 |
| AT286 | Console Bridging Input Module; 0 dBm | 100.00 |
| CP287 | Console Mic A.G.C. Preamplifier | 165.00 |
| AT288 | Console Bridging Input Module; +8 dBm | 125.00 |
| AT291 | Console Program Module | 165.00 |
| AT297 | Console Program Module | 195.00 |
| AT299 | Console Program Module | 215.00 |
| AT310 | Distribution Amplifier (Twenty-Two Outputs) | 200.00 |
| RG311 | Distribution Ampl. (AT310) c/w Remote Gain | 320.00 |
| AT313 | Universal Ampl. with Eight, 600 OHM Output Splits (FR906) | 325.00 |
| AT313/150 | Universal Ampl. with Two 150 OHM Output Splits (FR906) | 390.00 |
| AM484 | Monitor Ampl. 20 W, 8 OHM Transformerless Output (FR905) | 600.00 |
| AM487 | Monitor/Distribution Ampl., 20 W, Transformer Output (FR905) | 660.00 |
| AM487R | Monitor/Distribution Ampl., 20 W, Transformer Output with Remote Gain (FR905) | 750.00 |

| model | description | unit price |
|---|---|---|
| | **MONITOR AMPLIFIERS** | |
| D75 | Dual Channel 30 Watt Amplifier | 369.00 |
| D150A | Dual Channel 75 Watt Amplifier | 549.00 |
| AT265 | 3 Watt Mini-Cue Amplifier/Speaker; Rack Mounting | 200.00 |
| DC300A | Dual Channel 150 Watt Amplifier | 899.00 |
| AM415 | 10 Watt Self Powered Amplifier | 150.00 |
| AM481 | 15 Watt Power Amplifier | 190.00 |
| AM482 | 15 Watt Amplifier c/w Remote Gain | 310.00 |
| AM483 | 60 Watt Amplifier, Self Powered (Frame: FR905) | 520.00 |
| MT483-1 | Matching Input XMR for AM483 | 50.00 |
| BT483-1A | Briding Input XMR for AM483 | 50.00 |
| RG483-2A | Remote Gain Card for the AM483 | 110.00 |
| AM484 | Monitor Ampl., 20 W, 8 OHM, Transformerless Output (FR905) | 600.00 |
| AM487 | Monitor/DA 20 Watt, Self Powered (Frame: FR905) | 660.00 |
| AM487-R | Monitor/DA, 20 Watt, Self Powered with Remote Gain (FR905) | 750.00 |
| | **POWER SUPPLY** | |
| PS849 | Linear 48 Volt, 1 Amp Unreg. (FR904) | 225.00 |
| PS852 | Bipolar 15 Volt, 3 Amp (FR906) | 360.00 |
| PS853 | Bipolar 15 Volt, 3 Amp (FR905) | 360.00 |
| PS854 | Bipolar 25 Volt, 3 Amp (FR905) | P.O.R. |
| PS855 | Bipolar 25 Volt, 2 Amp (FR906) | 390.00 |
| PS856 | Linear 24 Volt, 4 Amp (FR906) | 390.00 |
| PS859 | Linear 48 Volt, 2 Amp. Reg.; 24 Volt, 1 Amp Reg. (FR905) | 550.00 |
| PS876A/48 | Linear 48 Volt, 1 Amp Reg.; 24 Volt, 250 MA Reg. (FR903) | 325.00 |

| model | description | unit price |
|---|---|---|
| | **INTERCOM SYSTEMS AND ACCESSORIES** | |
| CS9100 | 10 x 10 Balanced Intercom System c/w All Input and Output Amplifiers, Crosspoints and Power Supply (One Frame 5¼") | 6,000.00 |
| CS9200 | 20 x 20 Balanced Intercom System c/w All Input and Output Amplifiers, Crosspoints and Power Supply (Three Frames 15¾") | 16,445.00 |
| AP176 | Input Ampl. with no Crosspoints | 230.00 |
| AP276 | Input Ampl. with All Crosspoints | 255.00 |
| XP177 | No Preamp, Otherwise same as AP176 | 110.00 |
| XP277 | No Preamp, Otherwise same as AP276 | 130.00 |
| AM478T | Two Output Amps, +18 dBm and 3 Watts at 8 OHMS | 225.00 |
| PS852 | Power Supply ±15 Volts | 360.00 |
| CD4016 | Dual X-Pt Chips | 5.00 |
| | **AUDIO DISTRIBUTION SYSTEMS** | |
| DA504 | Audio Distribution Assembly c/w:<br>- Six Amplifiers, Each with 22 Outputs Max.<br>- Power Supply (PS855)<br>- Prewired and Tested in a 5¼" Frame (FR906) | 1,790.00 |
| DA505 | Audio Distribution Assembly c/w:<br>- Six AM487, Each with 75 Outputs Max.<br>- Mounted in a FR905 Frame | 4,260.00 |
| DA506 | Audio Distribution Assembly c/w:<br>- Six AT313 Amps, each with 22 Outputs Max.<br>- One PS855 Power Supply<br>- Mounted in a FR906 Frame | 2,510.00 |
| DA507 | Stereo Audio Distribution Assembly c/w:<br>- Six Stereo Distribution Amps (AT394)<br>- One PS855 Power Supply<br>- One FR906 Frame | 2,315.00 |

| model | description | unit price |
|---|---|---|
| | **AUDIO CONSOLES AND ACCESSORIES** | |
| SS4312 | 12 Mixer, Dual Channel, Monophonic Desk Mounting Console | 8,950.00 |
| SS4386A | 6 Mixer, Single Channel, Monophonic Desk Mounting Console | 4,750.00 |
| SS4388A | 8 Mixer, Single Channel, Monophonic Desk Mounting Console | 3,975.00 |
| SS8400 | 12 Mixer, Dual Channel Modular Monophonic Free Standing Console | P.O.R. |
| SS8500 | 10 Mixer, Stereo Modular Console, Free Standing | P.O.R. |
| | *NOTE: Series 8550, 8600, 8650, 7800 and 7900 Consoles for Air, Production and Recording are priced separately.* | |
| RC700 | Dual Pedestal Console Mounting Desk with Arborite Top and Recessed Control Tray | 1,100.00 |
| DC8481 | Single Push Button Remote 'Start' Switch for Console Desk c/w Panel | 40.00 |
| DC8481L | Single Alternate—Action Push Button 'Start' Switch for Console Desk c/w Panel | 40.00 |
| DC8482 | Two Push Button Remote 'Start-Stop' Switch for Console Desk c/w Panel | 60.00 |
| DC8483 | Three Push Button Remote Control Switch for Console Desk c/w Panel | 75.00 |
| DC8484 | Two Push Button Remote 'Start-Stop' Switch for Console Dsk with Space in Center | 65.00 |
| DC8485 | Five Push Button Remote Control Switch for Console Desk c/w Panel | 110.00 |
| 7601 | Script Board Assembly for Consoles | 250.00 |

| model | description | unit price |
|---|---|---|
| | **AMPLIFIER FRAMES AND ACCESSORIES** | |
| FR905 | Mounting Frame for Extrusion Modules 5¼" Rack Space | 140.00 |
| FR905-5 | Amphenol Conn., Cover and All Mounting Hardware for Installing P.S. and Other AC Operated Equipment (AM483,487) in FR905 Frame | 20.00 |
| FR906 | Mounting Frame for Universal Cards 5¼" Rack Space | 140.00 |
| FR906-1 | Extender Card for FR906 | 50.00 |
| FR906-5 | Amphenol Connector, Cover and All Mounting Hardware for Installing Power Supplies in FR906 Frame | 20.00 |
| FR906-6 | 72 Pine Wire-Wrap Connector and Mounting Hardware for FR906 Frame | 10.00 |
| FR906-7 | 72 Pine Solder-Eye Connector and Mounting Hardware for FR906 Frame | 10.00 |
| | **JACKFIELDS AND PATCH CORDS** | |
| SA10900S | Prewired Shielded Jackfield (Positions 1, 2, 3 and 4) | 250.00 |
| SA10902 | Unwired Jackfield | 115.00 |
| SA10131 | One Ft. Patch Cord | 13.00 |
| SA10132 | Two Ft. Patch Cord | 14.00 |
| SA10133 | Three Ft. Patch Cord | 15.00 |
| SA10134 | Four Ft. Patch Cord | 16.00 |
| SA10136 | Six Ft. Patch Cord | 17.00 |
| C10900/5-1 | JKF'D Mounting Bar | 10.00 |
| B10900/5-23 | JKF'D Swivel Bracket Assembly | 10.00 |

| model | description | unit price |
|---|---|---|
| | **MODULAR ENCLOSURES** | |
| SA10040 | Pedestal | 175.00 |
| SA10041 | Tape Machine Adapter Frame | 125.00 |
| SA10045 | Turntable Mounting Board | 70.00 |
| SA10045-1 | Turntable Arm Guard | 15.00 |
| SA10046 | Blank Top Board | 55.00 |
| SA10047 | Removable Door | 35.00 |
| SA10048 | End Bell | 35.00 |
| SA10080 | Jumbo Pedestal | 265.00 |
| SA10086 | Blank Top Board | 95.00 |
| SA10088 | End Bell | 40.00 |
| SA10030 | R.P. Housing for SA10080 Series | 200.00 |
| SA10030-1 | 3D Housing for SA10080 Series | 150.00 |
| SA10043 | Desk Mounting Cartridge - Tape Machine Housing | 250.00 |
| SA10044 | Floor Mounting Cartridge - Tape Machine Housing c/w Rear Door | 325.00 |
| SA10044-1 | Rack Mounting Frame for 2 - 3D Series Machines | 60.00 |
| SA10044-2 | Rack Mounting for RP Series Machine or 2 - SP Series Machines | 55.00 |
| SA10044-3 | Blank Panel to Cover Area when only 1 - 3D Machine is Housed in the SA10044-1 | 11.00 |
| SA10044-4 | Blank Panel to Cover Area when Only 1 - SP Machine is Housed in the SA10044-2 | 11.00 |
| SA10044-8 | Blank Panel to Cover Area Above WRA Series Machine when Mounted in SA10044-2 Beside the 3D Machine | 10.00 |
| | **EQUIPMENT RACKS** | |
| SA10410 | 22" Deep Equipment Rack c/w Rear Rails, AC Plugmold and Duplex Box | 350.00 |
| SA10411 | Side Panel for 22" Deep Rack | 50.00 |
| SA10412 | Door Assembly (Front or Rear) for 22" and 25½" Deep Racks | 85.00 |
| SA10413 | Top for 22" Deep Equipment Rack | 20.00 |
| SA10414 | Plugmold for 22" or 25½" Deep Racks | 45.00 |
| SA10420 | 25¼" Deep Equipment Rack c/w A/C Plugmold Duplex Box and Rear Rails | 370.00 |
| SA10421 | Side Panel for 25½" Equipment Rack | 55.00 |
| SA10423 | Top for 25½" Deep Rack | 20.00 |

| model | description | unit price |
|---|---|---|
| | **BLANK PANELS** | |
| SA11021 | 1¾" Blank Panel | 7.00 |
| SA11022 | 3½" Blank Panel | 8.00 |
| SA11023 | 5¼" Blank Panel | 9.00 |
| SA11024 | 7" Blank Panel | 10.00 |
| SA11025 | 8¾" Blank Panel | 11.00 |
| SA11026 | 10½" Blank Panel | 12.00 |
| SA11027 | 12¼" Blank Panel | 13.00 |
| 12-107 | 7" Deep Recess Bracket for Above Panels | 10.00 |
| 12-108 | 5¼" Deep Recess Bracket for Above Panels | 9.00 |
| 12-109 | 3½" Deep Recess Bracket for Above Panels | 8.00 |
| | **PROFESSIONAL SPEAKER SYSTEMS** | |
| 4301WX | Broadcast Monitor | 168.00 |
| 4301EWX | Amplified Broadcast Monitor | P.O.R. |
| 4311WX | Control Monitor, Oiled Walnut | 336.00 |
| 4313WX | Control Monitor, Oiled Walnut | 369.00 |
| 4315WX | Compact Studio Monitor, Oiled Walnut 4-Way | 906.00 |
| LSA609 | 10-Watt Speaker/Amplifier Assembly | 325.00 |
| | **CLOCKS AND COUNTERS** | |
| SA137A | Counter, Main Chassis | 475.00 |
| SA137A-01 | Display Panel | 220.00 |
| SA137A-06 | Counter Control Panel (Console Mount) | 165.00 |
| SA137A-07 | Counter Control Panel (Desk Mount) | 180.00 |
| SA138A | Clock Main Chassis | 200.00 |
| SA138A-2 | Display Panel for Clock Main Chassis | 165.00 |
| SA138A-01 | Display Panel for Console | 195.00 |
| SA138A-05 | Crystal Option for Clock | 85.00 |

| model | description | unit price |
|---|---|---|
| | **PROCESSING EQUIPMENT** | |
| EQ155D | Variable Equalizer | 400.00 |
| EQ8491 | Variable Equalizer 7½" | 435.00 |
| EQ8492 | Variable Equalizer 6½" | 435.00 |
| 622A | Single Channel Parametric Equalizer | 479.00 |
| 622B | Dual Channel Parametric Equalizer | 749.00 |
| | 622 Options<br>- Option 01: Transformer - Balanced Output (Indicate whether Single or Two Channel)<br>- Option 02: Eliminates Built-in AC Power Supply | |
| 672A | Equalizer | 499.00 |
| 501 | Kepex c/w Panel | 313.00 |
| 701 | Gain Brain c/w Panel | 313.00 |
| 418A | Stereo Compressor/Limiter | 795.00 |
| 8000A | Optimod-FM Compressor/Limiter/Stereo Generator | 3,195.00 |
| 9000 | Optimod-AM Compressor/Limiter | 3,995.00 |
| BD955 | Broadcast Digital Delay; 6.4 Sec. at 7.5KHz | 3,900.00 |
| BD955 | Broadcast Digital Delay; 6.4 Sec. at 15KHz | 6,300.00 |
| | Stereo Connection | 100.00 |
| FL201 | Flanger | 615.00 |
| FL201-03 | Balanced in/out XMR. Coupling | 50.00 |
| 2830 | Omnipressor | 600.00 |
| 2830-03 | Balanced in/out XMR Coupling | 40.00 |
| H910 | Harmonizer | 1,500.00 |
| H910-02 | Digital Pitch Ration Readout | 125.00 |
| H910-03 | Balanced in/out XMR. Coupling | 40.00 |
| H910-04 | Extra Variable Delay Output | 240.00 |
| H910-05 | 2-Octave Phase Locked Keyboard - Mono, Ctl's. one way | 500.00 |
| 245E | Stereo Sythesizer | 349.00 |
| 516EC | Dynamic Sibilance Controller | 629.00 |
| LA-4A | Compressor/Limiter | 396.00 |
| DR-3A | Double Rack Mount for Two LA-3A's or LA-4's | 14.00 |
| SR-3A | Single Rack Mount for One LA-3A or LA-4 | 18.00 |
| 1176LN | Peak Limiter | 488.00 |
| DR-21 | Double Rack Mount for Two LA-5's | 14.00 |
| SR-21 | Single Rack Mount | 18.00 |
| 111B | Dual Channel Echo Chamber | 695.00 |

| model | description | unit price |
|---|---|---|
| | **BROADCAST ACCESSORIES** | |
| SA141 | Mono Tape Input Switcher with Line Outputs and Cue Speaker | 550.00 |
| SA143 | Stereo Tape Input Switcher with Line Outputs and Cue Speaker | 825.00 |
| OT156 | Oscillator | 165.00 |
| OT157B | Variable Oscillator | 415.00 |
| SA14023 | Extended Range VU Meter | 600.00 |
| 4930 | Can of MRI Blue Touch-Up Paint | 6.00 |
| RG408-4 | AM408 Plug-In Tube Replacement | 50.00 |
| MR1-1007 | 1500 MFD, 75 Volt Capacitor | 5.00 |
| 5522 | Replacement Lamp 30V-40MA Schadow | 1.75 |
| MR1-502-M | P & G Mono Attenuator | 175.00 |
| MR1-502-S | P & G Stereo Attenuator | 250.00 |
| PJ660-5 | ADC Xmas Tree Terminal Block | 25.00 |
| SA618 | Warning Light Relay Assembly Less Relays (Each Relay is $60.00) | 175.00 |
| A-MRI-7-69 & A-MRI-9-20 | 7½" Blank Panel and Excutcheon for 7400 Console | 10.00 |
| A-MRI-7-75 & A-MRI-9-30 | 4" Blank Panel and Escutcheon for 7400 Rmt. Ctl. Tray | 8.00 |
| 19-02 | McCurdy 2-Conductor Shielded Cable per 1000 ft. | 100.00 |
| MD421U | Sennheiser Dynamic Microphone with Low Z Cable | 300.00 |
| MZW421 | Windscreen | 20.00 |
| MD441U | Sennheiser Dynamic Microphone with Low Z Cable | 418.00 |
| MZW441 | Windscreen | 24.00 |
| RL500 | Scully and MCI Reel to Reel Housing with Overbridge and Casters (For Full Track or Two Track) | 395.00 |

# McCurdy

# price list effective january 1977

SUPERSEDES PRICE LIST OF JANUARY 1976

| model | description | unit price |
|---|---|---|
| | **TURNTABLES AND DISC REPRODUCERS** | |
| SP10 MKII | Technics Direct Drive Turntable with servo speed control system; 33-1/3, 45, ARPM | $ 700.00 |
| CH12A | 12" Transcription Turntable; 3-speed (Rim drive) | 435.00 |
| SS3157 | Monaural Disc Reproducer, with cabinet, electronics and CH12A Turntable (less End Bells) | 1,865.00 |
| SS3159A | Stereo Disc Reproducer with cabinet, electronics and SP10MKII Turntable (less End Bells) | 2,585.00 |
| | **TURNTABLE ACCESSORIES** | |
| IW-CH12 | Idler Wheel for CH12A | 16.00 |
| DB-CH14 | Drive Belt for CH14 | 16.00 |
| AT235 | Equalized Phono Preamplifier –20 dBm to +8 dBm nominal output | 193.00 |
| SA236-P1 | Consists of Housing with Power Supply and one AT235 Equalized Phono Preamplifier; output level –20 dBm to +8 dBm nominal (selectable) | 352.00 |
| SA236-P2 | Consists of Housing with Power Supply and two AT235 Equalized Phono Preamplifiers; output level –20 dBm to +8 dBm nominal (selectable) | 544.00 |
| AM275 | 3 Watt Cue Amplifier for SS3157 and SS3159A Turntable Assembly | 150.00 |
| TM40-12FR | 12" Felt/Rubber mat for CH12A and SP10 MKII Turntables | 17.00 |
| SA10048 | End Bell (2 req'd) for Disc Reproducers | 30.00 |
| SA10545 | 45 RPM Adapter for CH12A and SP10 MKII Turntables | 1.00 |
| 303 | 12" Tone Arm | 85.00 |
| 75932 | Head Shell for 303 Tone Arm | 14.50 |
| 75961 | Weight Kit for 303 Tone Arm | 3.48 |
| 500AL | Stanton Cartridge | 15.00 |
| D5107AL | Stylus for 500AL | 8.00 |
| 681EEE | Stanton Cartridge | 50.00 |
| D6800EEE | Stylus for 681EEE | 25.00 |
| | **AMPLIFIERS** | |
| AT249 | Distribution Amplifier (six outputs) | 193.00 |
| AT265 | 3-Watt Mini-Cue Amplifier/Speaker; rack mounted | 204.00 |
| AT284 | Console Mic Preamplifier input module (–60 dBm, 150 ohms) | 100.00 |
| AT284A | Console Mic Preamplifier input module (–70 dBm, 150 ohms) | 105.00 |
| AT285 | Console Matching input module (–20 dBm, 600 ohms) | 100.00 |
| AT286 | Console Bridging input module ( 0 dBm, 20K ohms) | 100.00 |
| CP287 | Console Mic Preamplifier input module with AGC | 165.00 |
| AT288 | Console Bridging input module (+8 dBm, 40K ohms) | 122.00 |
| AT291 | Console program module | 165.00 |
| AT297 | Console program module | 195.00 |
| AT299 | Console program module | 215.00 |
| AT310 | Distribution Amplifier (twenty-two outputs, max.) | 204.00 |
| RG311 | Distribution Amplifier (AT310) with Remote Gain | 303.00 |

| model | description | unit price |
|---|---|---|
| | **MONITOR AMPLIFIERS** | |
| D60 | Dual Channel Monitor Amplifier (30 watts per channel) | 299.00 |
| D150A | Dual Channel Monitor Amplifier (75 watts per channel) | 499.00 |
| DC-300A | Dual Channel Monitor Amplifier (150 watts per channel) | 849.00 |
| AM415 | 10 watt self powered Amplifier | 149.00 |
| AM481 | 15 watt Power Amplifier | 193.00 |
| RG482 | 15 watt Power Amplifier with Remote Gain | 303.00 |
| AM483 | 60 watt self powered Amplifier | 523.00 |
| MT483-1 | Matching input Transformer for the AM483 | 50.00 |
| BT483-1A | Bridging input Transformer for the AM483 | 50.00 |
| RG483-2A | Remote Gain card for the AM483 | 110.00 |
| | **POWER SUPPLIES** | |
| PS814 | Bipolar 15 Volt, 150 mA (FR904) frame) | 193.00 |
| PS824R | Linear 24 Volt, 500 mA regulated (FR904 frame) | 138.00 |
| PS848B | Linear 48 Volt, 1 Amp. regulated, linear 24 Volt, 250 mA, regulated (FR904 frame) | 303.00 |
| PS849 | Linear 48 Volt, 1 Amp. unregulated (FR904 frame) | 193.00 |
| PS851 | Linear 5 Volt, 6 Amp. regulated (906 frame) | P.O.R. |
| PS852 | Bipolar 15 Volt, 6 Amp. (FR906 frame) | 303.00 |
| PS853 | Bipolar 15 Volt, 3 Amp. (FR905 frame) | 358.00 |
| PS854 | Bipolar 25 Volt, 3 Amp. (FR905 frame) | 435.00 |
| PS855 | Bipolar 25 Volt, 2 Amp. (FR906 frame) | 385.00 |
| PS856 | Linear 24 Volt, 4 Amp. (FR906 frame) | 385.00 |
| PS857 | Linear 24 Volt, 6 Amp. (FR905 frame) | 495.00 |
| PS858 | Linear 24 Volt, 1 Amp. (FR906 frame) | P.O.R. |
| PS859 | Linear 48 Volt, 2 Amp. regulated, 24 Volt, 1 Amp. regulated (FR905 frame) | 435.00 |
| PS876A/48 | Linear 48 Volt, 1 Amp. regulated; linear 24 Volt, 250 mA. regulated (FR903 frame) | 292.00 |
| | **INTERCOM SYSTEMS** | |
| CS9100 | 10 x 10 Balanced Intercom System c/w all input amplifiers, output amplifiers, crosspoints and power supply. One frame 5¼". | 4,950.00 |
| CS9200 | 20 x 20 Balanced Intercom System c/w all input amplifiers, output amplifiers, crosspoints and power supplies. Three frames (15¾" total) | 13,950.00 |
| CS9300 | 30 x 30 Balanced Intercom System c/w all input amplifiers, output amplifiers, crosspoints and power supplies. | P.O.R |

| model | description | unit price |
|---|---|---|
| | **INTERCOM ACCESSORIES** | |
| AP176 | Input amplifier with no crosspoints | 231.00 |
| AP276 | Input amplifier with all crosspoints | 253.00 |
| XP177 | No preamp, otherwise same as AP176 | 110.00 |
| XP277 | No preamp, otherwise same as AP276 | 132.00 |
| AM278 | Two output amps., +18 dBm only | 110.00 |
| AM478T | Two output amps., +18 dBm and 3 watts/8 ohms | 215.00 |
| PS852 | Power supply ± 15 Volts | 303.00 |
| CD4016 | Dual x-pt chip | 4.00 |
| | **AUDIO DISTRIBUTION SYSTEMS** | |
| DA503 | Audio Distribution Assembly c/w<br>– Six amplifiers with six outputs each<br>– Power supply<br>– Prewired and tested in 3½" frame | 1,568.00 |
| DA504 | Audio Distribution Assembly c/w<br>– Six amplifier with max. 22 outputs each<br>– Power supply<br>– Prewired and tested in 5¼" frame | 1,788.00 |
| | **AUDIO CONSOLES** | |
| SS4312 | 12-mixer Dual Channel Monophonic Console (desk mounting) | 8,250.00 |
| SS4386A | 6-mixer Single Channel Monophonic Console (desk mounting) | 4,500.00 |
| SS4388A | 8-mixer Single Channel Monophonic Console (desk mounting) | 3,975.00 |
| SS7400 | 12-mixer Dual Channel Monophonic Console (desk mounting) | 9,400.00 |
| SS7500-C8 | 8-mixer Stereo Console (desk mounting) | 10,000.00 |
| SS7500-C10 | 10-mixer Stereo Console (desk mounting) | 10,800.00 |
| SS7800 | 20-mixer, 4 Submaster, Dual Channel Production Console (free standing) | 27,000.00 |
| SS8400 | 12-mixer Dual Channel Modular Monophonic Console (free standing) | 9,600.00 |
| SS8500 | 10-mixer Modular Stereo Console (free standing) | 11,000.00 |
| | **ACCESSORIES FOR DESK-MOUNTING CONSOLES** | |
| RC700 | Dual Pedestal Console Mounting Desk with Arborite Top and Recessed Control Tray | 1,000.00 |
| DC8481 | Single Push Button Remote 'START' Switch for Console Desk C/W Panel | 40.00 |
| DC8481L | Single Alternate-Action Push Button Remote 'START' Switch for Console Desk C/W Panel | 40.00 |
| DC8482 | Two Push Button Remote 'START-STOP' Switch for Console Desk C/W Panel | 80.00 |
| DC8483 | Three Push Button Remote Control Switch for Console Desk C/W Panel | 105.00 |
| DC8485 | Five Push Button Remote Control Switch for Console Desk C/W Panel | 175.00 |

| model | description | unit price |
|---|---|---|
| | **AMPLIFIER FRAMES AND ACCESSORIES** | |
| FR903 | Mounting Frame (less connectors) for PS876A/48 3½" Rack Space | 105.00 |
| FR950-1 | Frame Receptacle Kit for above | 5.00 |
| FR904 | Universal Card Frame (less connectors) 3½" Rack Space | 105.00 |
| FR904-1 | 15-pin Receptacle Kit | 4.00 |
| FR904-2 | 30-pin Receptacle Kit | 5.00 |
| FR904-3 | 16-pin Receptacle Kit for PS848B (including connector cover) | 17.00 |
| EM14 | Extender Module for FR904 Frame | 50.00 |
| FR905 | Mounting Frame (extrusion modules) 5¼" Rack Space | 125.00 |
| FR905-1 | Extender Card for FR905 | 50.00 |
| FR906 | Mounting Frame (universal card frame) 5¼" Rack Space | 125.00 |
| FR906-1 | Extender Card for FR906 | 50.00 |
| | **JACKFIELDS AND PATCH CORDS** | |
| SA10900-S | Prewired Shielded Jackfield (Positions 1,2,3, & 4) | 225.00 |
| SA10802 | Unwired Jackfield | 100.00 |
| SA10131 | 1 ft. Patch Cord | 10.00 |
| SA10132 | 2 ft. Patch Cord | 11.00 |
| SA10133 | 3 ft. Patch Cord | 12.00 |
| SA10134 | 4 ft. Patch Cord | 13.00 |
| SA10136 | 6 ft. Patch Cord | 14.00 |
| | **MODULAR ENCLOSURES** | |
| SA10040 | Pedestal | 165.00 |
| SA10041 | Tape Machine Adapter Frame | 110.00 |
| SA10045 | Turntable Mounting Board | 60.00 |
| SA10045-1 | Turntable Arm Guard | 12.00 |
| SA10046 | Blank Top Board | 50.00 |
| SA10047 | Removable Door | 35.00 |
| SA10048 | End Bell | 30.00 |
| SA10080 | Jumbo Pedestal | 225.00 |
| SA10086 | Blank Top Board | 60.00 |
| SA10087 | Removable Door | 45.00 |
| SA10088 | End Bell | 40.00 |
| SA10030 | R.P. Housing for SA10080 series | 200.00 |
| SA10030-1 | 3D Housing for SA10080 series | 150.00 |
| SA10043 | Desk Mounting Cartridge-Tape Machine Housing | 220.00 |
| SA10044 | Floor Mounting Cartridge-Tape Machine Housing c/w rear door | 300.00 |
| SA10044-1 | Rack Mounting Frame for 2 — 3D series machine | 60.00 |
| SA10044-2 | Rack Mounting Frame for RP series machine or 2 — SP series machine | 50.00 |
| SA10044-3 | Blank Panel to cover area when only 1 — 3D machine is housed in the SA10044-1 | 11.00 |
| SA10044-4 | Blank Panel to cover area when only 1 — SP machine is housed in the SA10044-2 | 11.00 |
| SA10044-8 | Blank Panel to cover area above WRA series machine when mounted in SA10044-2 beside the 3D machine | 10.00 |

| model | description | unit price |
|---|---|---|
| | **EQUIPMENT RACKS** | |
| SA10410 | 22" Deep Equipment Rack c/w AC plugmold — duplex box | 300.00 |
| SA10411 | Side Panel for 22" Equipment Rack | 45.00 |
| SA10412 | Door Assembly (front or rear) for 22" and 25½" Racks | 80.00 |
| SA10413 | Top for 22" Equipment Rack | 18.00 |
| SA10414 | Plugmold for 22" or 25½" deep Rack (installed) | 40.00 |
| SA10420 | 25½" Deep Equipment Rack c/w AC plugmold — duplex box | 325.00 |
| SA10421 | Side Panel for 25½" Equipment Rack | 50.00 |
| SA10423 | Top for 25½" Equipment Rack | 20.00 |
| MR1925-4 | Mounting Angles for above Racks | 45.00 |
| | **BLANK PANELS** | |
| SA11021 | 1¾" Blank Panel | 6.00 |
| SA11022 | 3½" Blank Panel | 7.00 |
| SA11023 | 5¼" Blank Panel | 8.00 |
| SA11024 | 7" Blank Panel | 9.00 |
| SA11025 | 8¾" Blank Panel | 10.00 |
| SA11026 | 10½" Blank Panel | 11.00 |
| SA11027 | 12¼" Blank Panel | 12.00 |
| 12-107 | 7" Deep recess brkt. for above panels | Set 10.00 |
| 12-108 | 5¼" Deep recess brkt. for above panels | Set 9.00 |
| 12-109 | 3½" Deep recess brkt. for above panels | Set 8.00 |
| | **PROFESSIONAL SPEAKER SYSTEMS** | |
| 4311 | Control Room Monitor, Studio Gray | 324.00 |
| 4311WX | Control Room Monitor, Oiled Walnut | 333.00 |
| 4315 | Compact Studio Monitor, Studio Gray, 4-way | 771.00 |
| 4315WX | Compact Studio Monitor, Oiled Walnut, 4-way | 783.00 |
| 4331A | Studio Monitor, Studio Gray, 2-way | 768.00 |
| 4331A-WX | Studio Monitor, Oiled Walnut, 2-way | 804.00 |
| LSA609 | 10-Watt Speaker/Amplifier Assembly | 300.00 |

| model | description | unit price |
|---|---|---|
| | **MISCELLANEOUS** | |
| 111B | Orban/Parasound Dual Channel Reverb Chamber | 695.00 |
| SA137A | Counter, basic chassis only | 500.00 |
| SA137A-01 | Display Panel c/w 7 ft. cable (vu size) | 300.00 |
| SA137A-02 | Display Panel C/W 7 Ft. Cable (Spkr. Size) | 300.00 |
| SA137A-07 | Counter Control Panel (desk mounting) | 200.00 |
| SA137A-06 | Counter Control Panel (console mounting) | 200.00 |
| SA138A | Clock Main Chassis | 500.00 |
| SA138A-2 | Display Panel for Clock Main Chassis | 300.00 |
| SA138A-01 | Display Panel c/w 7 ft. cable (vu size) | 300.00 |
| SA138A-02 | Display Panel c/w 7 ft. cable (spkr. size) | 300.00 |
| SA141 | Tape Input Swr. with line output and Cue speaker | 545.00 |
| EQ155 | Variable Equalizer | 400.00 |
| OT157 | Variable Oscillator | 350.00 |
| CP159 | Compressor/Limiter | 550.00 |
| 4930 | Can of MRI-Blue Touch-up Paint | 6.00 |
| SA14021 | Extended Range Audio Level Meter | 575.00 |
| 408-2 | L.D.R. Tube for AM408 | 40.00 |
| EM7800-1 | Extender Module for 77 & 7800 Consoles | 50.00 |
| 3002 | MRI Matching Transformer 600/600, 150/150 | 40.00 |
| 842 | Hammond Bridging Transformer (20K) | 40.00 |
| ARISTOCART | Alignment Tape | 35.00 |
| MRI-1007 | 1500 MFD, 75V Capacitor | 5.00 |
| 5522 | Schadow 30 Volt, 40 mA. Lamp | 1.50 |
| MRI-502-M | P & G Mono Attendator | 175.00 |
| MRI-502-S | P & G Stereo Attendator | 250.00 |
| SA139 | Voice Operated Relay | 100.00 |
| PJ660-5 | ADC Xmas Tree Terminal Block | 15.00 |

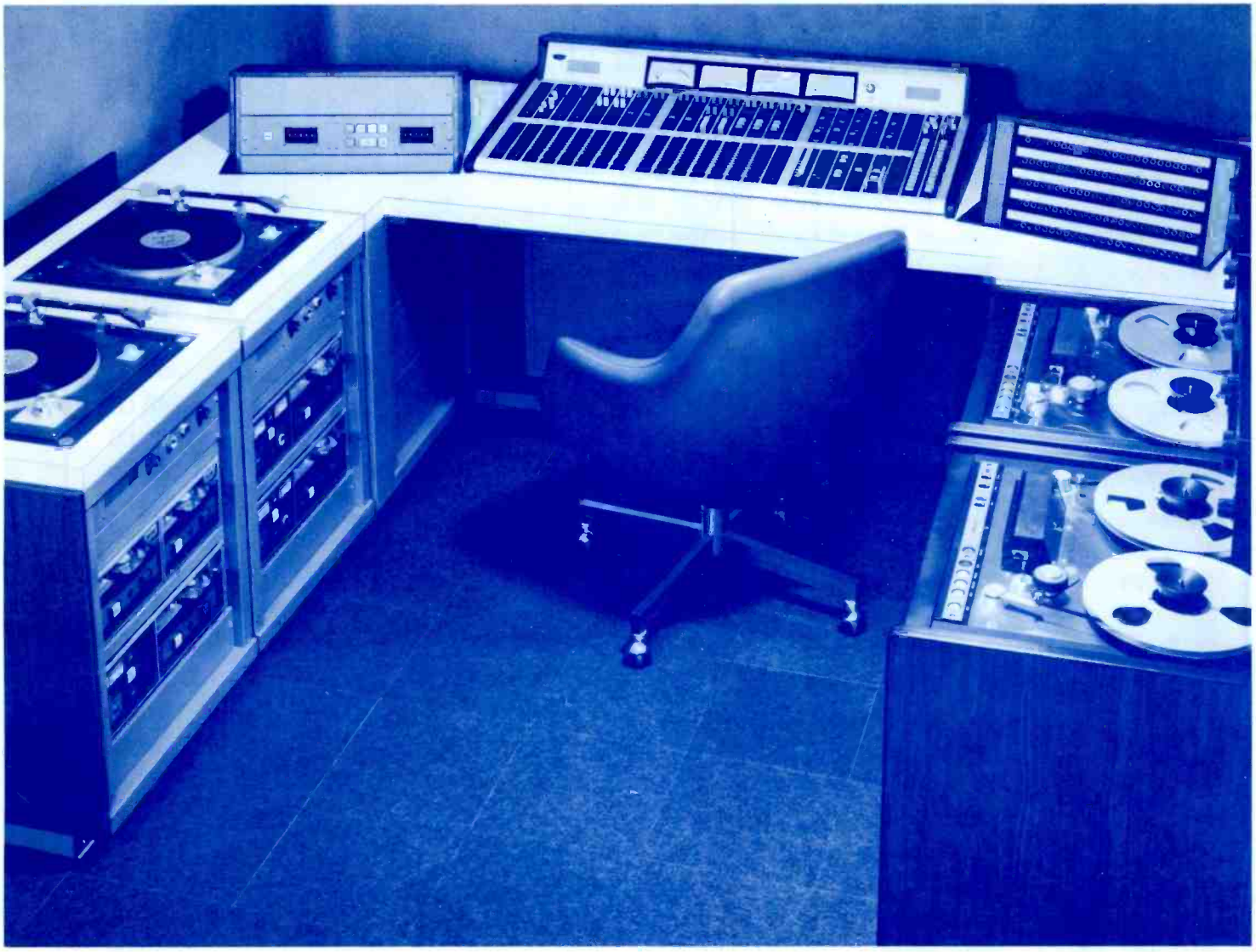

State and Local Taxes excluded.

Prices shown F.O.B. Plant

Shipping by Surface Freight unless otherwise specified.

Prices Subject to Change without notice.

McCURDY


McCURDY RADIO INDUSTRIES INC.

HEAD OFFICE: 1711 CARMEN DRIVE, ELK GROVE VILLAGE, CHICAGO, ILL. 60007 PHONE: (312) 640-7077

EASTERN OFFICES: 1051 CLINTON ST., BUFFALO, N.Y. 14206 PHONE: (716) 854-6700 TWX: (610) 492-1373

223 W. SADDLE RIVER ROAD, SADDLE RIVER, N.J. 07458 PHONE: (201) 327-0750 TWX: (710) 988-2254

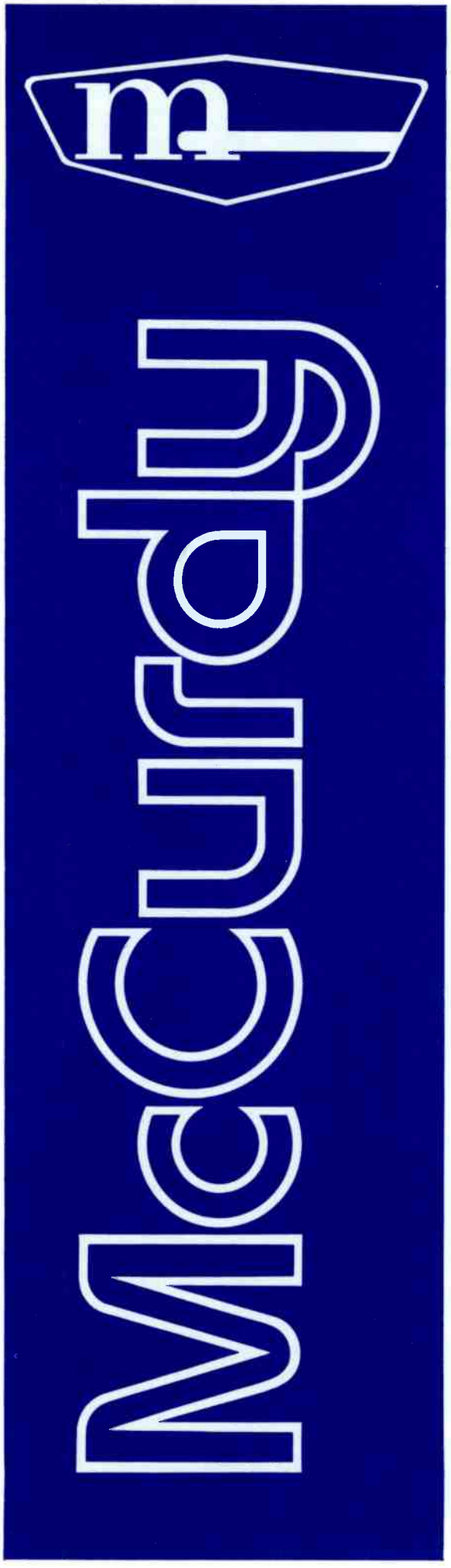


# PRICE LIST

## Effective November, 1ST

# 1974

State and Local Taxes excluded.

Prices shown F.O.B. Buffalo, N.Y.

Shipping by Surface Freight
unless otherwise specified.

Prices Subject To Change
Without Notice.

McCurdy Radio Industries Inc.

1051 CLINTON STREET, BUFFALO, N.Y. 14206 (716) 854-6700

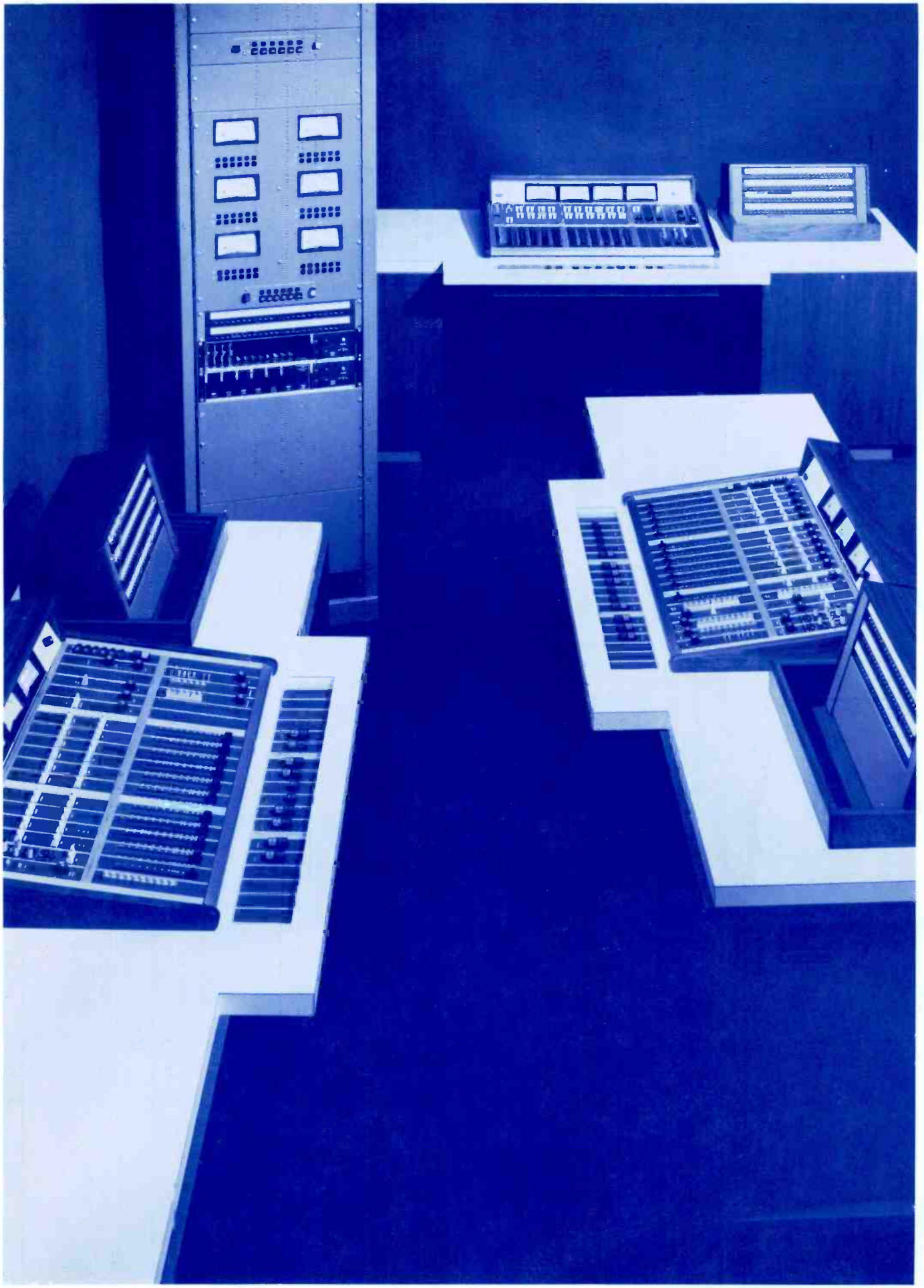

| model | description | unit price |
|---|---|---|
| | **TURNTABLES AND DISC REPRODUCERS** | |
| SP10D | Technics Direct Drive Turntables with servo speed control system; 33⅓, 45 RPM | Price on request |
| CH12A | 12″ Transcription Turntable; 3-speed (Rim-drive) | $ 380.00 |
| CH14 | 12″ Transcription Turntable; 33⅓, 45; (Belt Drive) | 440.00 |
| SS3157 | Monaural Disc Reproducer, with cabinet & Electronics with CH12A Turntable (Less End Bells) | 1,500.00 |
| SS3158 | Stereo Disc Reproducer, with cabinet and Electronics & CH14 Turntable (Less End Bells) | 1,835.00 |
| SS3159 | Stereo Disc Reproducer, with cabinet, electronics and SP10D turntable (Less End Bells) | 1,940.00 |
| | **TURNTABLE ACCESSORIES** | |
| IW-CH12 | Idler Wheel for CHI2A | 14.00 |
| DB-CH14 | Drive Belt for CHI4 | 13.00 |
| AT135 | Equalized Phono Preamplifier –20 dBm to +8 dBm normal output (selectable) | 185.00 |
| SA136-P1 | Consists of Housing with Power Supply and one AT135 Equalized Phono Preamplifier; output level –20 dBm to +8 dBm nominal (selectable) | 295.00 |
| SA136-P2 | Consists of Housing with Power Supply and two AT135 Equalized Phono Preamplifier; output level –20 dBm to +8 dBm nominal (selectable) | 480.00 |
| AM275 | 3 Watt Cue Amplifier for SS3157, SS3158, and SS3159 turntable assemblies | 140.00 |
| TM40-12FR | 12″ Felt/Rubber Mat for CH12A and CH14 | 15.00 |
| SA10048 | End Bell (2 req'd) for Disc Reproducers | 28.00 |
| SA10545 | 45 RPM Adapter for CH12A and CH14 | 1.50 |
| | **CARTRIDGES BY STANTON** | |
| | **CALIBRATION STANDARD (with "Longhair" Brush)** | |
| | **Cartridge Color** / **Stylus Model** / **Tracking Force** | |
| 681EEE | Silver / D6800EEE / ¾ to 1½ Grams | 44.00 |
| 681EE | Silver / D6800EE / ¾ to 1½ Grams | 39.00 |
| 681SE | Silver / D6800SE / 2 to 4 Grams | 37.00 |
| 681A | Silver / D6807A / 1½ to 3 Grams | 37.00 |
| 681AMC | Silver / D6872AMC / 3 to 7 Grams | 37.00 |
| | **BROADCAST STANDARD** | |
| 500EE | Gold / D5100EE / 1 to 2 Grams | 22.00 |
| 500E | Gold / D5100E / 2 to 5 Grams | 20.00 |
| 500AA | Gold / D5105AA / 1 to 2½ Grams | 20.00 |
| 500A | Gold / D5107A / 2 to 5 Grams | 17.00 |
| 500AL | Gold / D5107AL / 3 to 7 Grams | 17.00 |
| | **BROADCAST STANDARD — H. P.** | |
| 600EE | Gold / D6003EE / 1 to 2 Grams | 32.00 |
| 600E | Gold / D6004E / 1½ to 3 Grams | 29.00 |
| 600A | Gold / D6071A / 2 to 4 Grams | 26.00 |

| model | description | | | unit price |
|---|---|---|---|---|
| | **FOUR CHANNEL DISCRETE (with "Longhair" Brush)** | | | |
| 780/4DQ | Silver | 4DQ QUAD | 2 ± ½ Grams | $ 75.00 |
| 780/Q | Silver | Q QUAD | 2 ± ½ Grams | 55.00 |
| | **REPLACEMENT STYLII (STANTON)** | | | |
| | **V-GUARD FOR 681 (with "Longhair" Brush)** | | | |
| | **Stylus Color** | **Radius** | **Tracking Force** | |
| D6800EEE | Black W/Silver 'EEE' | 0.2 x 0.7 mil Elliptical | ¾ to 1½ Grams | 21.00 |
| D6800EE | Black W/Silver Ellipse | 0.2 x 0.7 mil Elliptical | ¾ to 1½ Grams | 20.00 |
| D6800SE | Black W/Red Ellipse | 0.4 x 0.7 mil Elliptical | 2 to 4 Grams | 17.00 |
| D6807A | Black W/Silver Dot | 0.7 mil | 1½ to 3 Grams | 17.00 |
| D6872AMC | Black W/AQUA 'AMC' | 0.7 mil | 3 to 7 Grams | 17.00 |
| D6810 | Black W/Green Dot | 1.0 mil | 2 to 5 Grams | 17.00 |
| D6827 | Black W/Blue Dot | 2.7 mil | 2 to 7 Grams | 17.00 |
| | **V- GUARD FOR 500** | | | |
| D5100EE | Black W/Gold Dot | 0.3 x 0.7 mil Elliptical | 1 to 2 Grams | 14.00 |
| D5100E | Black W/Red Dot | 0.4 x 0.7 mil Elliptical | 2 to 5 Grams | 11.00 |
| D5105AA | Black W/Gray Dot | 0.5 mil | 1 to 2½ Grams | 10.00 |
| D5107A | Black W/Yel Dot | 0.7 mil | 2 to 5 Grams | 7.00 |
| D5107AL | Black W/Aqua Dot | 0.7 mil | 3 to 7 Grams | 7.00 |
| D5110 | Black W/White Dot | 1.0 mil | 2 to 5 Grams | 7.00 |
| D5127 | Black W/Blue Dot | 2.7 mil | 3 to 7 Grams | 7.00 |
| | **V-GUARD FOR 600 (no "Longhair" Brush)** | | | |
| D6003EE | Black | 0.3 x 0.7 mil Elliptical | 1 to 2 Grams | 22.00 |
| D6004E | Black | 0.4 x 0.7 mil Elliptical | 1½ to 3 Grams | 20.00 |
| D6071A | Black | 0.7 mil | 2 to 4 Grams | 17.00 |
| D6010 | Black | 1.0 mil | 2 to 5 Grams | 15.00 |
| D6027 | Black | 2.7 mil | 3 to 7 Grams | 15.00 |
| | **V-GUARD FOR FOUR CHANNEL DISCRETE (with "Longhair" Brush)** | | | |
| 4/DQ | Black W/Silver '4/DQ' | Quadrahedral | 2 ± ½ Grams | 30.00 |
| Q | Black W/Silver 'Q' | Quadrahedral | 2 ± ½ Grams | 22.00 |

| model | description | unit price |
|---|---|---|
| | **MICRO-TRAK SERIES TONE ARM** | |
| 303 | 12″ Tone Arm | $ 79.50 |
| 306 | 16″ Tone Arm | 87.50 |
| 206S | 12″ Viscous Damped Tone Arm | 72.50 |
| 206-SG | 12″ Viscous Damped Tone Arm | 72.50 |
| | **TONE ARM ACCESSORIES** | |
| 75932 | Head Shell — 303 | 12.50 |
| 75942 | Head Shell — 306 | 12.50 |
| 75961 | Weight Kit | 2.65 |
| 75908 | Anti-skate fluid — 5 | 6.25 |
| 75792 | Slide Kit — 206 | 7.55 |
| 75743 | Slide only — 206 | 4.25 |
| 75799 | Weight Kit | 2.65 |
| 75800 | Weight (VR-11) | 1.00 |
| 75051 | Viscous Fluid — 5 | 6.25 |
| | **AMPLIFIERS** | |
| AT242A | Universal Audio Amplifier | 220.00 |
| AT249 | Distribution Amplifier | 175.00 |
| AT264A | 2 Watt Mini-cue Amplifier/Speaker; Rack Mtd. | 210.00 |
| AP274 | Intercom Mic Preamplifier | 125.00 |
| AM275 | Intercom 3 Watt nominal output Amplifier | 140.00 |
| AT284 | Console Mic Preamplifier input module | 100.00 |
| AT285 | Console matching input module (–20 dBm, 600 ohms) | 100.00 |
| AT286 | Console bridging input module (0 dBm, 600 ohms) | 100.00 |
| AM408A | 10 Watt Monitor Amplifier less 2000 — series input transformer (requires SA10007A mtg. frame) | 350.00 |
| AM408-1 | Remote Gain Kit for AM408A | 30.00 |
| MRI-2001 | Matching Input Transformer 150/600 for AM408A | 30.00 |
| MRI-2002 | Bridging Input Transformer 5K/20K for AM408A | 30.00 |
| AM415 | 10 Watt Monitor Amplifier (for use in LSA609 speaker, etc.) | 175.00 |
| QUAD-50E | 50 Watt Monitor Amplifier, c/w matching input transformer, (1 to 3 units fit in FR907 frame) | 375.00 |
| | **POWER SUPPLIES** | |
| PS814 | Bipolar 15 volt. Supply; 150 ma | 170.00 |
| PS824R | 24v dc, 500 ma; regulated | 130.00 |
| PS848B | 48v dc, 1 amp, regulated; 24v dc 250 ma, reg. (mounts in FR904 or DA503) | 245.00 |
| PS849 | 48v dc; unregulated as supplied in DA503 | 190.00 |
| PS876A/48 | 48v dc, 1 amp, regulated; 24v dc, 250 ma, reg. (mounts 4 per FR903 Frame) | 265.00 |
| PS879 | 44v dc, unregulated; (for use with AT242A, mounts in SA 10004A or modified SA10071 frame) | 100.00 |

| model | description | unit price |
|---|---|---|
| | **AUDIO SWITCHERS**<br>CUSTOM CONFIGURATIONS AVAILABLE ON REQUEST | |
| | **INTERCOM SYSTEMS** | |
| CS9100 | 10 x 10 Balanced Intercom System c/w all input amplifiers, all output amplifiers, crosspoints & power supply. One Frame 5¼" | Price on request |
| CS9200 | 20 x 20 Balanced Intercom Systems c/w all input amplifiers, all output amplifiers, crosspoints & power supplies. 3 Frames 15¾" | Price on request |
| | **AUDIO DISTRIBUTION SYSTEMS** | |
| DA501-D1 | Distribution Assembly: one amplifier, one power supply, four outputs | $ 500.00 |
| DA501-D2 | Distribution Assembly: one amplifier, one power supply, eight outputs | 525.00 |
| DA501-D3 | Distribution Assembly: two amplifiers, two power supplies, four outputs, each amplifier | 780.00 |
| DA501-D4 | Distribution Assembly: two amplifiers, two power supplies, eight outputs, each amplifier | 800.00 |
| DA502-D5 | Distribution Assembly: six amplifiers, no power supplies, four outputs, each amplifier | 1,690.00 |
| DA502-D6 | Distribution Assembly: six amplifiers, no power supplies, eight outputs, each amplifier | 1,780.00 |
| DA503 | Audio Distribution Assembly: 6 amplifiers, 36 outputs, power supply, mounted and wired in FR904 frame | 1,295.00 |
| | **AUDIO CONSOLES** | |
| SS4312 | 12-Mixer, Dual Channel Monophonic Audio Console, 32 switchable inputs, rotary attenuators, complete cue system, with amplifier and speaker (desk mounting) | 6,850.00 |
| SS4386A | 6-Mixer 1-Channel Audio Console with slide attenuators; each mixer accepts HL and LL inputs, push-button cue system with amplifier and speaker (desk mounting) | 3,800.00 |
| SS4388A | 8-Mixer, 1-Channel Audio Console, each mixer input to accept HL and LL inputs; push-button cue system with amplifier and speaker; provision for DC remote control and additional auxiliary inputs (desk mounting) | 3,500.00 |
| SS7400 | Mono 2-Channel Audio Console with slide attenuators. May incorporate up to 12 mixers two inputs per channel. Options include additional input switching, Echo Send, equalizer or compressor inserts and foldback capability. Standard monitor feed and cue system included. (Desk mounting) | Price on request |
| SS7500 | Stereo Audio Console with slide attenuators. May incorporate up to 10 mixers, 2 inputs per mixer; options include additional input switching, equalizer inserts, compressor limiters, and mono sum channel. Standard monitor feed and cue system included. (Desk mounting) | Price on request |
| SS7600 | Custom Audio Console, can accommodate up to 20 mono, or 18 stereo mixer channels with audition and program outputs. Options include additional input switching, equalizer inserts and compressor limiters. Standard monitor feed and cue system included. (Desk mounting) | Price on request |

| model | description | unit price |
|---|---|---|
| SS7700 | Recording and TV Production Console, up to 24-Mixer Channels with various multiple sub and master channel combinations possible. Each mixer with input sensitivity switching, Echo Send, foldback, cue, solo, and channel-on switch. Space available for individual channel equalizers, master compressors, and multiple foldback outputs. Jackfields may be fitted as required. | Price on request |
| SS7800 | Recording and TV Production Console, up to 36-Mixer Channels with various multiple sub and master channel combinations possible. Each Mixer with input sensitivity switching, Echo send, foldback, cue, solo, and channel-on switch. Space available for individual channel equalizers, master compressors, and multiple foldback outputs. Jackfields may be fitted as required | Price on request |
| | **ACCESSORIES FOR DESK-MOUNTING CONSOLES** | |
| RC700 | Dual Pedestal Console Mounting Desk with white arborite top and recessed remote control panel | $ 900.00 |
| SS7408 | Turntable remote 'START' pushbutton for console desk c/w panel | 30.00 |
| SS7409 | Reel Tape Remote 'START-STOP' pushbuttons for console desk c/w panel | 60.00 |
| SS7410 | Cartridge Tape Remote 'START' pushbuttons for console desk c/w panel | 30.00 |
| SS4361B | Monaural Announce Turret c/w microphone preamplifier (less cable) and talkback switch | 500.00 |
| SS4371B | Dual Channel Announce Turret c/w microphone preamplifier; left-center-right switch and talkback switch (less cable) | 600.00 |
| | **AMPLIFIER FRAMES** | |
| FR903 | Mounting Frame (less connectors) for PS876A/48 3½ Rack Space | 85.00 |
| FR950-1 | Frame Receptable Kit for above | 5.00 |
| FR904 | Universal Card Frame (less connectors) 3½" Rack Space | 85.00 |
| FR904-1 | Frame Receptacle Kit (15-pin) | 5.00 |
| FR904-2 | Frame Receptacle Kit (30-pin) | 5.00 |
| FR904-3 | Frame Receptacle Kit (16-pin) for PS848B, PS849, (including connector cover) | 15.00 |
| FR905 | Mounting Frame (Extrusion Modules) 5¼" Rack Space | 100.00 |
| FR906 | Mounting Frame (Universal Card Frame) 5¼" Rack Space | 100.00 |
| EM14 | Extender Module for FR904 Frame | 50.00 |
| FR907 | Mounting Frame for up to 3 QUAD 50E Amplifiers | 95.00 |
| SA10007A | Mounting Frame for up to 4 AM408A Amplifiers complete with connectors | 175.00 |
| SA10004A | Mounting Frame for up to 6 AT242A Amplifiers | 150.00 |
| SA10071 | Mounting Frame for 1 AT242A | 30.00 |
| SA10071 (M) | Mounting Frame for 1 PS879 | 30.00 |
| SA10072 | Mounting Frame for 1 Module (AT135, etc.) | 30.00 |

| model | description | unit price |
|---|---|---|
| | **JACKFIELDS AND PATCH CORDS** | |
| SA10100 | Prewired Jackfield; unshielded (Positions 1, 2, 3, 4) | $ 150.00 |
| SA10100-S | Prewired Jackfield; shielded (Positions 1, 2, 3, 4) | 200.00 |
| SA10102 | Unwired Jackfield | 100.00 |
| SA10131 | 1 ft. Patch Cord | 8.00 |
| SA10132 | 2 ft. Patch Cord | 8.50 |
| SA10133 | 3 ft. Patch Cord | 9.00 |
| SA10134 | 4 ft. Patch Cord | 10.00 |
| SA10136 | 6 ft. Patch Cord | 11.00 |
| | **MODULAR ENCLOSURES** | |
| SA10040 | Pedestal | 150.00 |
| SA10041 | Tape Machine Adapter Frame | 90.00 |
| SA10043 | Cartridge-Tape Machine Housing (desk mounting) | 200.00 |
| SA10044 | Cartridge-Tape Machine Housing, (floor mtg.) c/w Rear door | 250.00 |
| SA10045 | Turntable Mounting Board | 55.00 |
| SA10045-1 | Turntable Arm Guard | 10.00 |
| SA10046 | Blank Top Board | 50.00 |
| SA10047 | Removable Door | 35.00 |
| SA10048 | End Bell | 25.00 |
| | **EQUIPMENT RACKS** | |
| SA10410 | 22" Equipment Rack | 250.00 |
| SA10411 | Side Panel | 30.00 |
| SA10412 | Door Assembly (Front or Rear) | 50.00 |
| SA10413 | Rack Top | 15.00 |
| SA10414 | Plug Mold for 22" or 25½" Rack. Installed | 30.00 |
| SA10420 | 25½" Equipment Rack | 275.00 |
| SA10421 | Side Panel | 33.00 |
| SA10412 | Door Assembly (Front or Rear) | 50.00 |
| SA10423 | Rack Top | 15.00 |
| 12-24 x ¾ | Machine Screws (As supplied with Racks) | .05 |
| 12-24 | Speed Nuts (As supplied with Racks) | .05 |
| | **BLANK PANELS** | |
| SA11021 | 1¾" Blank Panel | 5.00 |
| SA11022 | 3½" Blank Panel | 5.25 |
| SA11023 | 5¼" Blank Panel | 5.50 |
| SA11024 | 7" Blank Panel | 5.75 |
| SA11025 | 8¾" Blank Panel | 6.00 |
| SA11026 | 10½" Blank Panel | 7.50 |
| SA11027 | 12¼" Blank Panel | 8.50 |

| model | description | unit price |
|---|---|---|
| | **MISCELLANEOUS** | |
| 106C | Orban/Parasound Spring Reverb | $ 695.00 |
| EQ155A | Variable Equalizer | 395.00 |
| CP159 | Compressor/Limiter | 395.00 |
| OT157 | Variable Oscillator | 395.00 |
| LSA609 | 10 Watt Speaker/Amplifier mounted in a walnut-finished cabinet with 15° reverse slope for wall mounting | 295.00 |
| LS609 | As above, less AM415 Amplifier | 150.00 |
| 4930 | Can of Touch-up Paint (MRI-Blue) | 3.50 |
| SA14021A | Extended Range Audio Level Meter | 435.00 |
| 5728 | Stanton Dynaphase Twenty-eight Headphone | 21.00 |
| 5740 | Stanton Dynaphase Forty Headphone | 36.00 |
| 5765 | Stanton Dynaphase Sixty-five Four 'C' (Four Channel) Headphone | 48.00 |
| 5760 | Stanton Dynaphase Sixty Headphone | 50.00 |
| 5751 | Stanton Dynaphase Fifty Headphone | 42.00 |
| 5741 | Stanton Dynaphase Control Box | 15.00 |
| | **ITC CARTRIDGE RECORDER/REPRODUCER** | |
| RP-0001 | Monophonic with 1 kHz primary cue | 1,250.00 |
| RP-0002 | Stereophonic with 1 kHz primary cue | 1,495.00 |
| RP-0003 | Monophonic with 1 kHz primary, 150 Hz secondary, and 8 kHz tertiary cues | 1,325.00 |
| RP-0004 | Stereophonic with 1 kHz primary, 150 Hz secondary, and 8 kHz tertiary cues | 1,570.00 |
| RP-0005 | Monophonic, Hi-Speed Cue with 1 kHz 150 Hz, and 8 kHz cues | 1,415.00 |
| RP-0006 | Stereophonic, Hi-Speed Cue with 1 kHz 150 Hz and 8 kHz cues | 1,660.00 |
| | RP series recorder/reproducers accept the NAB 'A', 'B' and 'C' size cartridges | |
| | **ITC CARTRIDGE REPRODUCER** | |
| SP-0001 | Monophonic with 1 kHz primary cue | 695.00 |
| SP-0002 | Stereophonic with 1 kHz primary cue | 795.00 |
| SP-0003 | Monophonic with 1 kHz primary, 150 Hz secondary, and 8 kHz tertiary cues | 745.00 |
| SP-0004 | Stereophonic with 1 kHz primary, 150 Hz secondary, and 8 kHz tertiary cues | 845.00 |
| SP-0005 | Monophonic, Hi-Speed Cue with 1 kHz, 150 Hz, and 8 kHz cues | 825.00 |
| SP-0006 | Stereophonic, Hi-Speed Cue with 1 kHz, 150 Hz, and 8 kHz cues | 925.00 |
| | SP series reproducers accept the NAB 'A' and 'B' size cartridges | |

| model | description | unit price |
|---|---|---|
| | **ITC CARTRIDGE THREE-DECK REPRODUCER** | |
| 3D-0001 | Monophonic with 1 kHz primary cue | $1,595.00 |
| 3D-0002 | Stereophonic with 1 kHz primary cue | 1,895.00 |
| 3D-0003 | Monophonic with 1 kHz primary, 150 Hz secondary, and 8 kHz tertiary cues | 1,745.00 |
| 3D-0004 | Stereophonic with 1 kHz primary, 150 Hz secondary, and 8 kHz tertiary cues | 2,045.00 |
| | **ACCESSORIES** | |
| AS-0001 | Audio Switcher, three input single output balanced audio switching, 0-dBm Insertion loss. Two required for stereophonic applications. | 95.00 |
| | **RACK MOUNTING FRAMES** | |
| SA-10044-2 | Rack Mounting Frame for RP series machine or 2-SP series machines | 35.00 |
| SA-10044-4 | Blank Panel to cover area when only 1-SP machine is housed in the SA10044-2 | 8.00 |
| SA-10044-1 | Rack Mounting Frame for 2-3D series machines | 50.00 |
| SA-10044-3 | Blank Panel to cover area when only 1-3D machine is housed in the SA-10044-1 | 10.00 |
| SA-10044-8 | Blank Panel to cover area above WRA series machine when mounted in SA-10044-2 beside the 3D machine | 8.00 |
| NOTE 1 | All Equipment for table-top mounting and 60 Hz 117 VAC operation | |
| NOTE 2 | All 3-Tone RP — SP series may be ordered with 7½-30 IPS motors and circuitry to provide for 30 IPS operation upon sensing 150 Hz end of message signal. | |
| | **WRA RECORD AMPLIFIER** | |
| WRA-0001 | Monophonic with 1 kHz primary cue | 560.00 |
| WRA-0002 | Stereophonic with 1 kHz primary cue | 705.00 |
| WRA-0003 | Monophonic with 1 kHz primary, 150 Hz secondary, and 8 kHz tertiary cues | 585.00 |
| WRA-0004 | Stereophonic with 1 kHz primary, 150 Hz secondary, and 8 kHz tertiary cues | 730.00 |

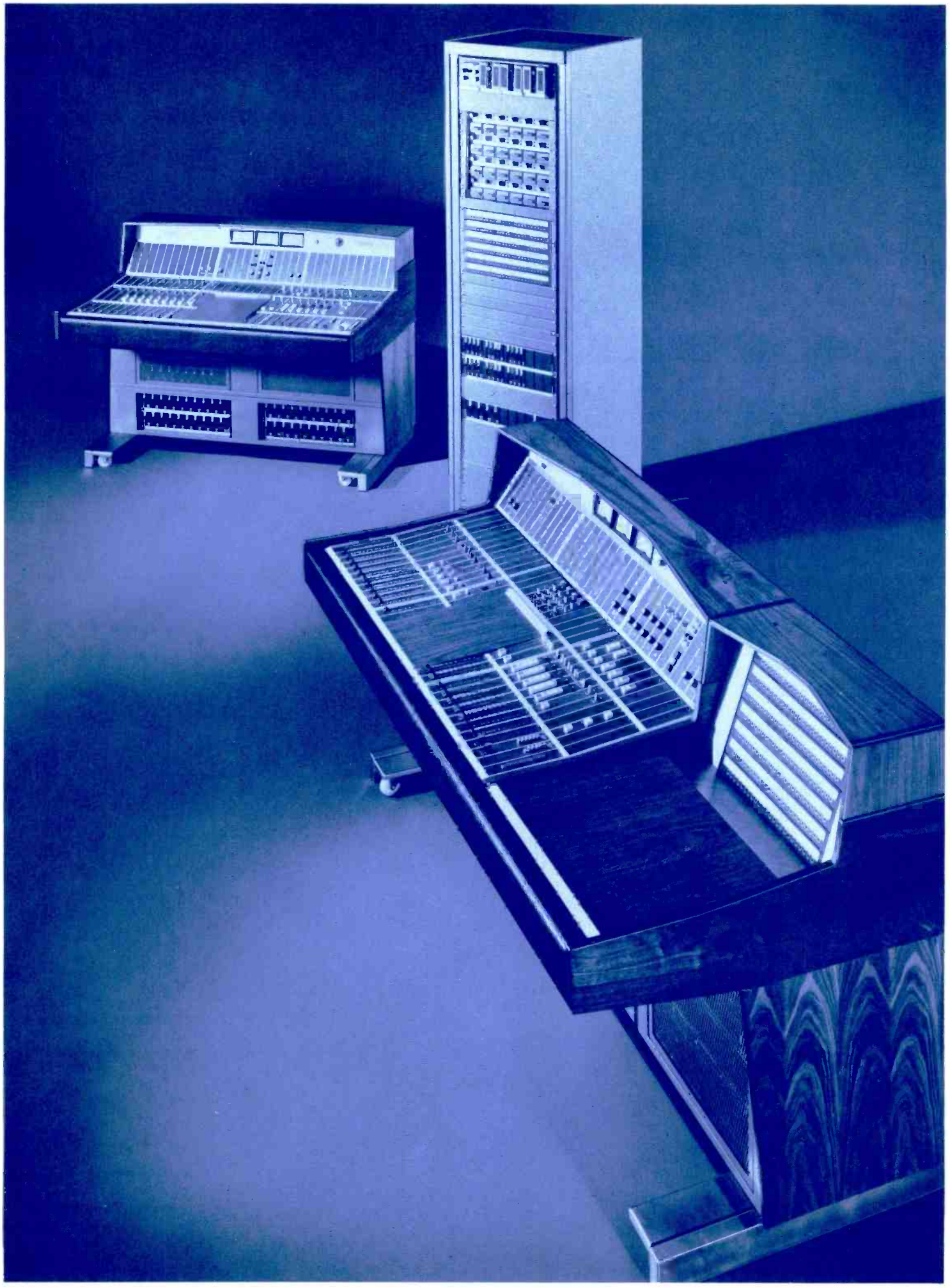

# Price List

State and Local
Taxes Excluded

Price Shown F.O.B.
Point of Manufacture

Prices Subject to Change
Without Notice

Effective May, 1970

McCURDY RADIO INDUSTRIES LIMITED
108 CARNFORTH ROAD ▭ TORONTO 16 ▭ CANADA
(416) 751-6262
TELEX 02-21660

McCURDY RADIO INDUSTRIES INCORPORATED
1051 CLINTON STREET ▭ BUFFALO ▭ N.Y. 14206
(716) 854-6700

## AMPLIFIERS

| | | |
|---|---|---|
| AT131 | Equalized Phono Preamplifier with RIAA/rolloff switch | 135.00 |
| AT240A | Microphone Preamplifier | 110.00 |
| AT242A | Solid-State Universal Audio Amplifier | 182.00 |
| MT244A | Matching Transformer Module | 36.00 |
| MT245 | Bridging Transformer Module | 36.00 |
| AT264 | 2-Watt Mini-Cue Amplifier/Speaker | 152.00 |
| AM408A | 10-Watt Monitor Amplifier (less 2000 series input transformer) | 334.00 |
| AM408-1 | Remote Gain Control Kit for AM408A | 23.00 |
| MRI-2001 | Matching Input Transformer 150/600 ohms for AM408A | 22.00 |
| MRI-2002 | Bridging Input Transformer 5K/20K ohms for AM408A | 22.00 |

## POWER SUPPLIES

| | | |
|---|---|---|
| PS874A | 36v/44v Regulated Power Supply | 299.00 |
| PS890 | Power Supply for up to six AT131's | 73.00 |

## DA501/DA502 AUDIO DISTRIBUTION SYSTEMS

| | | |
|---|---|---|
| D-1 | Distribution Assembly; one amplifier, one power supply; four outputs | 407.00 |
| D-2 | Distribution Assembly; one amplifier, one power supply; eight outputs | 439.00 |
| D-3 | Distribution Assembly; two amplifiers, two power supplies; four outputs each amplifier | 657.00 |
| D-4 | Distribution Assembly; two amplifiers, two power supplies, eight outputs each amplifier | 689.00 |
| D-5 | Distribution Assembly; six amplifiers, no power supply; four outputs each amplifier | 1418.00 |
| D-6 | Distribution Assembly; six amplifiers, no power supply; eight outputs each amplifier | 1512.00 |

## AUDIO CONSOLES

### TABLE TOP MODELS

| | | |
|---|---|---|
| SS4360 | Basic 34 Input, 10 Mixer, Dual Channel (MONAURAL) Console (LESS all input modules) | 4809.00 |
| SS4361B | Monaural Announce Control Turret c/w microphone preamplifier (less cable) | 473.00 |
| SS4360-1 | Dual Pedestal Mounting Desk with recessed control panel, wiring tray and removable script board | 761.00 |
| AT263 | Extra 10 Watt Monitor Channel Kit for SS4360 ONLY | 181.00 |
| SS4370 | Basic 28 Input, 8 Mixer, Dual Channel STEREO Console (LESS all input modules) | 6017.00 |
| SS4371B | Stereo Announce Control Turret c/w microphone preamplifier and left-center-right switch (less cable) | 557.00 |
| | Plug-In Input Modules for SS4360 and SS4370: | |
| AT240A | Microphone Preamplifier 37.5/150 ohms | 110.00 |
| MT244A | Matching Input Transformer 150/600 ohms | 36.00 |
| MT245 | Bridging Input Transformer 5K/20K ohms | 36.00 |
| SS4386 | Six Mixer Single Channel Audio Console, each mixer to accept HL and LL inputs; complete with pushbutton cue system. Equipped with slide attenuators. | 3255.00 |
| SS4388 | Eight Mixer Single Channel Audio Console, each mixer to accept HL and LL inputs; complete with pushbutton cue system. Equipped with rotary attenuators. | 2835.00 |
| SS4395 | Six Mixer, Slide Attenuator, Dual Channel Audio Console. Complete with 6 microphone preamplifiers, cue amplifier and power supply, less monitor amplifier. | 4825.00 |
| SS4396 | Twelve Mixer, Slide Attenuator, Dual Channel Audio Console. Complete with 12 microphone preamplifiers, cue amplifiers and power supply, less monitor amplifier. | 7600.00 |

## AUDIO CONSOLES (cont'd)

| | | |
|---|---|---|
| SS4900 | Audio Production, TV and Recording Console, up to 30 mixer channels 4 to 8 subs, 2 to 4 program channels. Space for all other accessories used with a console of this type. | PRICE ON REQUEST |
| SS5200 | Audio Production Console, up to 20 mixer channels, 4 subs, 2 to 4 program channels, echo send, prelisten cue and monitoring facilities. Space for input sensitivity switches, equalizers and compressors as required. | PRICE ON REQUEST |

## AUDIO SWITCHING EQUIPMENT

| | |
|---|---|
| Reed Relay | 13.00 |
| Armature Relay | 9.00 |
| SM8/SM18 Modules | 32.00 |
| Isolation Pads - 8 pads per card installed | 2.00 |
| Mixing Pads - 8 pads per card installed | 2.00 |
| Transistor hold-cancel circuit - installed | 21.00 |

OPTIONS:

| | | |
|---|---|---|
| FR904 | Equipment Frame | 79.00 |
| FR904-2 | Frame Receptacle Kit - Elco edge connector | 4.00 |
| | Power Supply - 24v D.C. | |
| | Power Supply Mounting Frame | |

## ACCESSORIES

AMPLIFIER FRAMES

| | | |
|---|---|---|
| FR-903 | Mounting Frame (less connectors) for universal plug-in modules | 79.00 |
| FR-904 | Universal Card Frame (less connectors) | 79.00 |
| FR-904-1 | Receptacle Kit for intercom etc. | 2.50 |
| FR-904-2 | Receptacle Kit for audio switcher | 4.00 |

## ACCESSORIES (cont'd)

### AMPLIFIER FRAMES (cont'd)

| | | |
|---|---|---|
| SA10004A | Mounting Frame for 240 series modules | 110.00 |
| SA10007A | Amplifier/Power Supply Mounting Frame | 121.00 |
| SA10007-2 | 4¼" Wide Blank Frame Insert for SA10007A frame (same size as PS874A or AM408A) | 8.00 |

### EQUIPMENT RACKS

| | | |
|---|---|---|
| SA10410 | 22" Equipment Rack | 210.00 |
| SA10411 | Side Panel | 28.00 |
| SA10412 | Door Assembly (front or rear) | 47.00 |
| SA10413 | Rack Top | 16.00 |
| SA10420 | 25½" Equipment Rack | 221.00 |
| SA10421 | Side Panel | 32.00 |
| SA10412 | Door Assembly (front or rear) | 47.00 |
| SA10423 | Rack Top | 16.00 |

### BLANK PANELS

| | | |
|---|---|---|
| SA11021 | 1-3/4" Blank Panel | 5.00 |
| SA11022 | 3-1/2" Blank Panel | 6.00 |
| SA11023 | 5-1/4" Blank Panel | 6.00 |
| SA11024 | 7" Blank Panel | 6.00 |
| SA11025 | 8-3/4" Blank Panel | 6.00 |
| SA11026 | 10-1/2" Blank Panel | 7.00 |

### JACKFIELDS

| | | |
|---|---|---|
| SA10100 | Prewired Jackfield, unshielded (positions 1,2,3,4) | 131.00 |
| SA10100-S | Prewired Jackfield, shielded (positions 1,2,3,4) | 189.00 |
| SA10102 | Unwired Jackfield | 74.00 |
| SA10131 | 1 ft. Patch Cord | 7.00 |

JACKFIELDS (cont'd)

| | | |
|---|---|---|
| SA10132 | 2 ft. Patch Cord | 8.00 |
| SA10133 | 3 ft. Patch Cord | 8.50 |
| SA10136 | 6 ft. Patch Cord | 9.00 |

VU METERS

| | | |
|---|---|---|
| SA14021A | Extended Range Audio Level Meter | 415.00 |

MODULAR ENCLOSURES

| | | |
|---|---|---|
| SA10040 | Pedestal | 131.00 |
| SA10041 | Tape Machine Adapter Frame | 89.00 |
| SA10042 | Cartridge Tape Housing c/w rear door | 221.00 |
| SA10045 | Turntable Mounting Board | 60.00 |
| SA10045-1 | Turntable Arm Guard | 9.00 |
| SA10046 | Blank Top Board | 37.00 |
| SA10047 | Removable Door | 30.00 |
| SA10048 | End Bell | 18.00 |

SPEAKER/AMPLIFIERS

| | | |
|---|---|---|
| LSA608 | 10-Watt Speaker/Amplifier mounted in walnut finished rectangular cabinet. | 231.00 |
| LSA609 | 10-Watt Speaker/Amplifier mounted in walnut finished cabinet with $15^{\circ}$ reverse slope for wall mounting. | 231.00 |

PORTABLE EQUIPMENT

| | | |
|---|---|---|
| PE2400 | Four-Mixer Single-Channel Portable Console, complete with AC power supply. Each mixer to accept HL and LL inputs. Also available in rack mount. | 1360.00 |

## CS7000 SERIES INTERCOM SYSTEM

| | | |
|---|---|---|
| SM11 | Crosspoint | 10.00 |
| SMX-12 | Matrix Card A | 13.00 |
| SMX-12 | Matrix Card B, less frame etc. | 9.00 |
| | Resistor | .16 |
| | Resistor - installed | .32 |
| AP-272 | Input Amplifier | 95.00 |
| AM-273 | Output Amplifier | 142.00 |
| CM-272-1 | AGC Card | 34.00 |
| | Output Frame | 131.00 |
| | Input Frame | 189.00 |
| | Matrix Frame | 189.00 |
| CS-7010 | 10 x 10 Basic not including rack | 1649.00 |
| CS-7020 | 18 x 20 Basic not including rack | 2838.00 |
| CS-7040 | 36 x 40 Basic not including rack | ON REQUEST |
| | Power Supply | Depends on size of system |
| LS7104 | Speaker Unit c/w volume control | 40.00 |
| CP7101 | Key Panel - 5 keys | 95.00 |
| | Microphone Kit | ON REQUEST |

# AM · FM · TV BROADCAST EQUIPMENT

**McCurdy Radio Industries, Inc.**

57 North Putnam Street • Danvers, Massachusetts 01923

(617) 744-6411